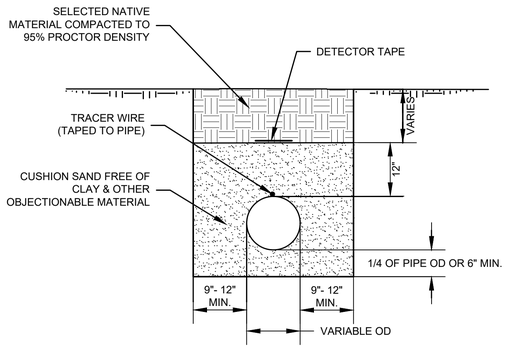

WATER PIPE EMBEDMENT DETAIL

N.T.S.

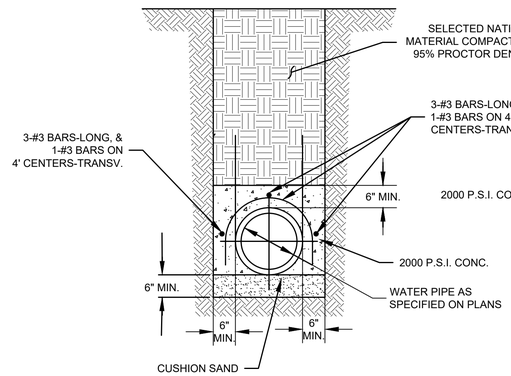

CAP DETAIL

N.T.S.

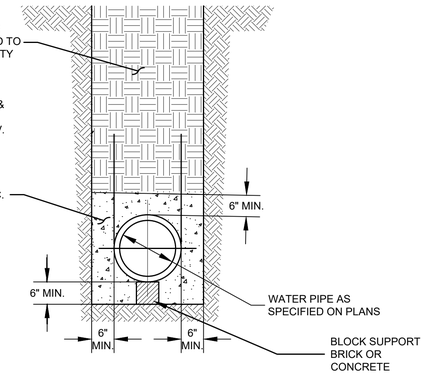

ENCASEMENT DETAIL

N.T.S.

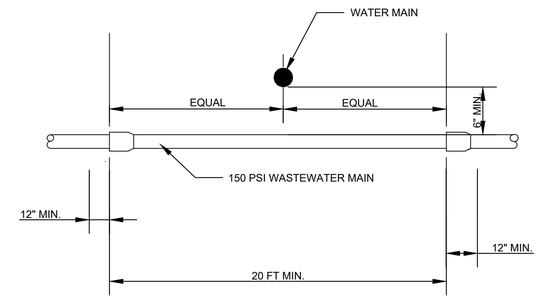

(PER NOTE 1)

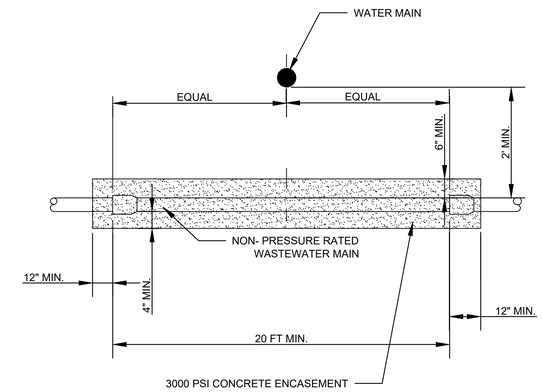

(PER NOTE 2)

NOTE:

WHERE A WATER LINE AND NEW WASTEWATER LINE ARE INSTALLED WITH A SEPARATION DISTANCE CLOSER THAN NINE FEET (i.e WATER LINES CROSSING WASTEWATER LINES, WATER LINES PARALLELING WASTEWATER LINES OR WATER LINES NEXT TO MANHOLES) THE INSTALLATION MUST MEET THE FOLLOWING REQUIREMENTS

1. IF A WASTEWATER LINE CROSSES BELOW A WATER SUPPLY PIPE AND THE FORMER IS CONSTRUCTED OF AT LEAST 150 PSI PRESSURE CLASS, CORROSION-RESISTANT, NON-BRITTLE PIPE; THERE SHALL BE AT LEAST SIX INCHES OF VERTICAL SEPARATION BETWEEN THE OUTSIDES OF THE PIPES;
2. IF A WASTEWATER PIPE CROSSES BELOW A WATER SUPPLY PIPE AND THE FORMER IS CONSTRUCTED OF ANY MATERIAL OTHER THAN AT LEAST 150 PSI PRESSURE CLASS, CORROSION-RESISTANT, NON-BRITTLE PIPE THERE SHALL BE AT LEAST TWO FEET OF SEPARATION BETWEEN THE OUTSIDES OF THE PIPES; AND BE ENCASED IN 3000PSI CONCRETE.

WATER/WASTEWATER CROSSING

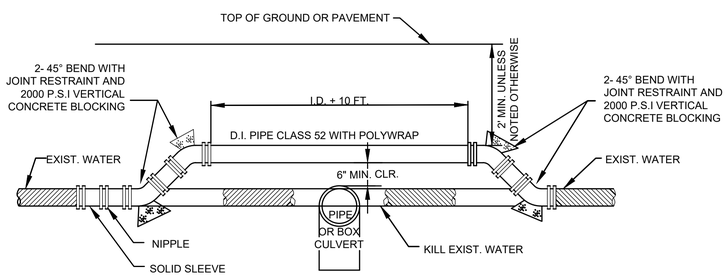

WATER MAIN ADJUSTMENT ABOVE PIPE

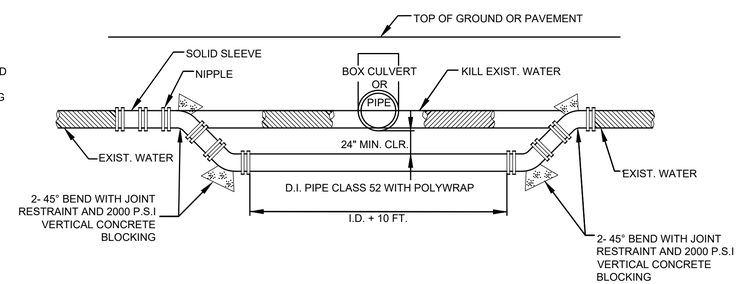

WATER MAIN ADJUSTMENT BELOW PIPE

WATER MAIN ADJUSTMENT DETAILS

N.T.S.

CITY OF CELINA				
WATER DETAILS 1				
STANDARD DETAILS				
CELINA TEXAS Life Connected.				
DESIGNED BY: C.O	REV. BY	DATE	SYMBOL	DATE: MAY 2020
	C.O			
CHECKED BY: G.J	SCALE : NOT TO SCALE			SHEET NO.: W1

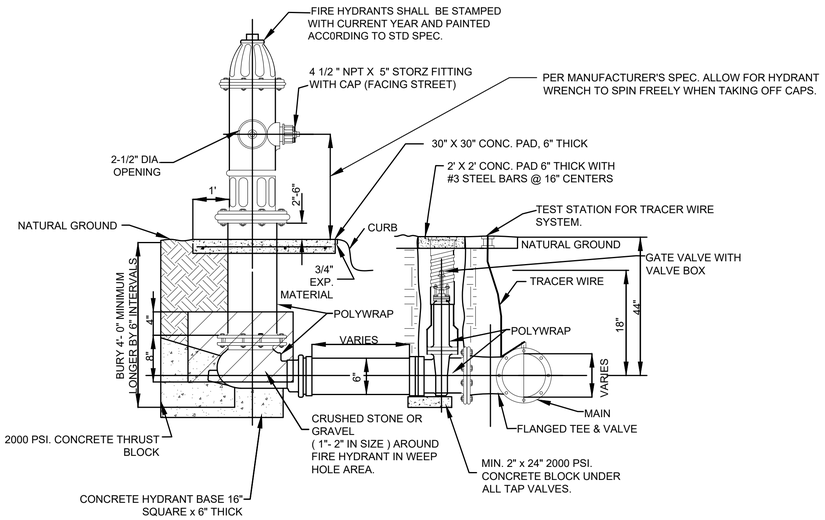

STANDARD FIRE HYDRANT DETAIL

N.T.S.

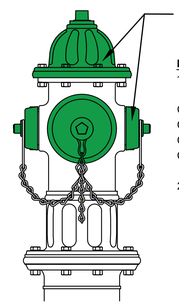

NOTES:

1. FIRE HYDRANT CAPS AND BONNETS SHALL BE PAINTED WITH TWO (2) COATS ACCORDING TO NFP 291 CHAPTER 3.

CLASS C	LESS THAN 500 GALLONS PER MINUTE (GPM)	TNEMEC SERIES 2H-SC09 SAFETY RED
CLASS B	500-999 GALLONS PER MINUTE (GPM)	TNEMEC SERIES 2H-SC03 SAFETY ORANGE
CLASS A	1000-1499 GALONS PER MINUTE (GPM)	TNEMEC SERIES 2H-SC07 SAFETY GREEN
CLASS AA	1500 GALLONS PER MINUTE (GPM) & ABOVE	TNEMEC SERIES 2H-SC06 SAFETY BLUE

2. BODY OF THE HYDRANT SHALL BE CHROME ALUMINUM (TNEMEC)

FIRE HYDRANT COLOR DETAIL

N.T.S.

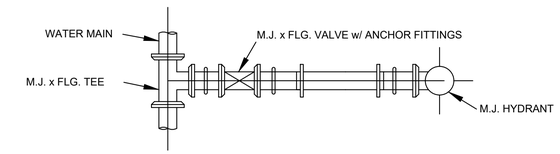

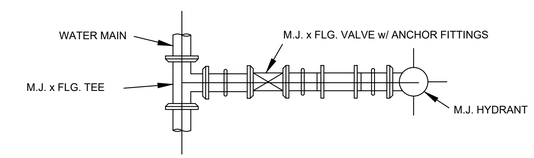

NOTE:
1. MAXIMUM OF TWO (2) EXTENSIONS SHALL BE ALLOWED ON FIRE HYDRANTS

FIRE HYDRANT INSTALLATION

N.T.S.

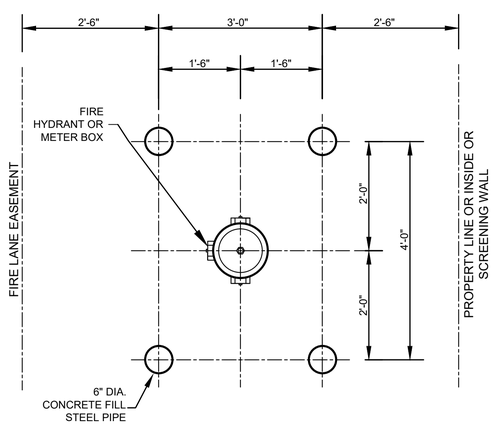

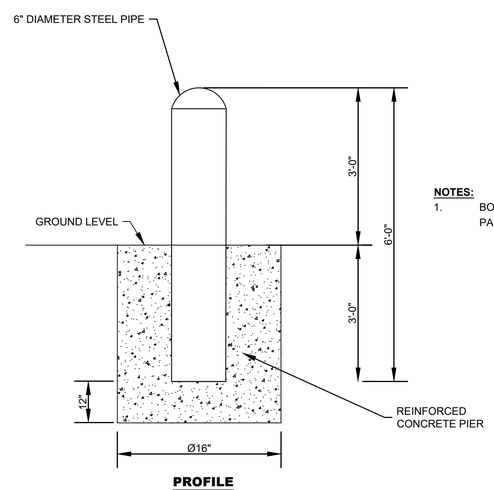

PROFILE

NOTES:

1. BOLLARDS SHALL BE PAINTED BLACK

PIPE BOLLARD

N.T.S.

CITY OF CELINA				
WATER DETAILS 2				
STANDARD DETAILS				
CELINA TEXAS EST. 2013 Life Connected.				
DESIGNED BY: C.O	REV. BY	DATE	SYMBOL	DATE: MAY 2020
	C.O			
CHECKED BY: G.J	SCALE : NOT TO SCALE			SHEET NO.:W2

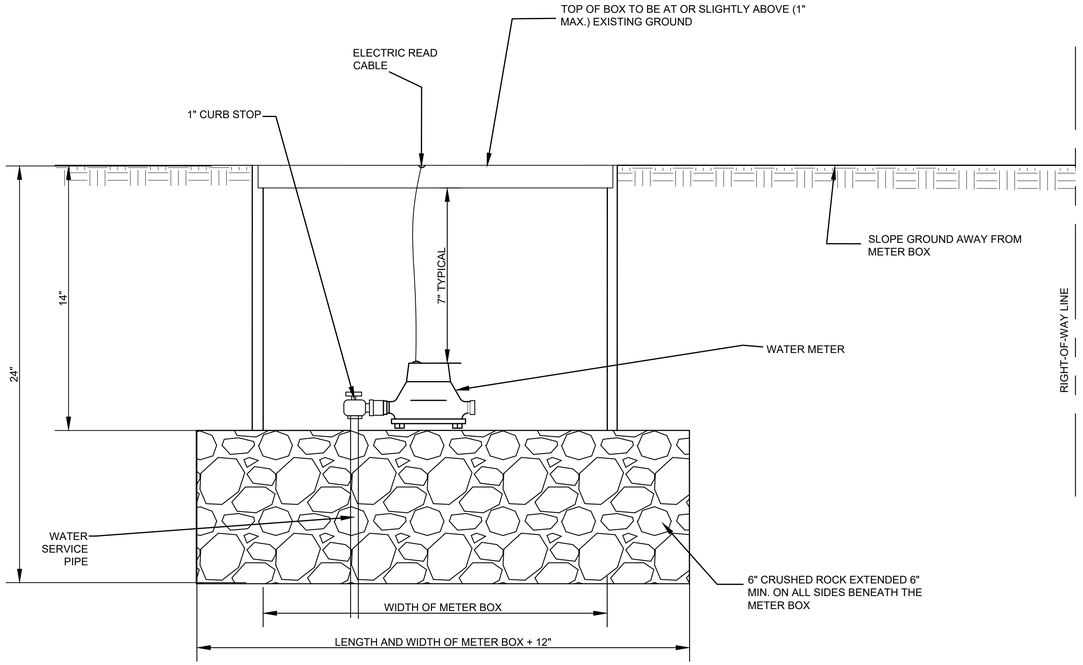

1" - 2" WATER SERVICE DETAIL

N.T.S.

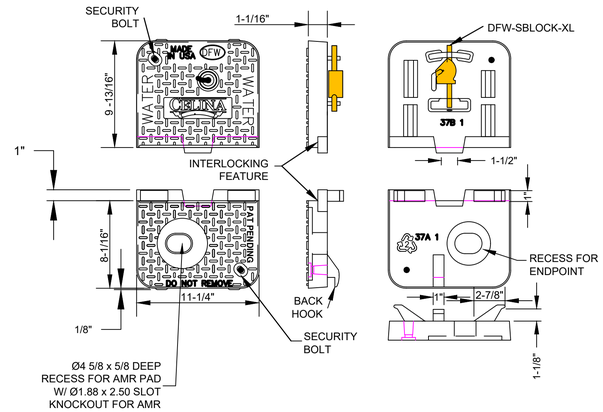

DFW37A-1SFDEEP CELINA- LID

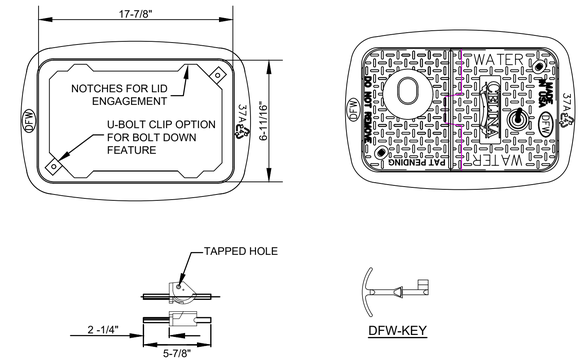

DFW-SBLOCK-XL

NOTES:
1. SEE APPROVED MATERIAL LIST FOR SPECIFIED METER BOX AND LID BASED ON METER SIZE
2. METERS 3" AND GREATER SHALL REQUIRE A VAULT

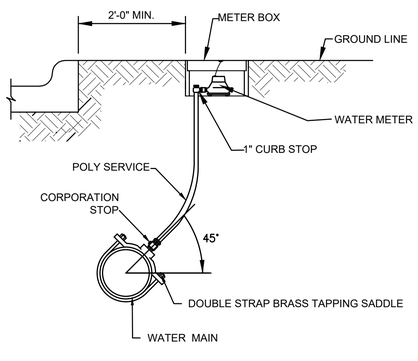

TYPICAL SERVICE CONNECTION

N.T.S.

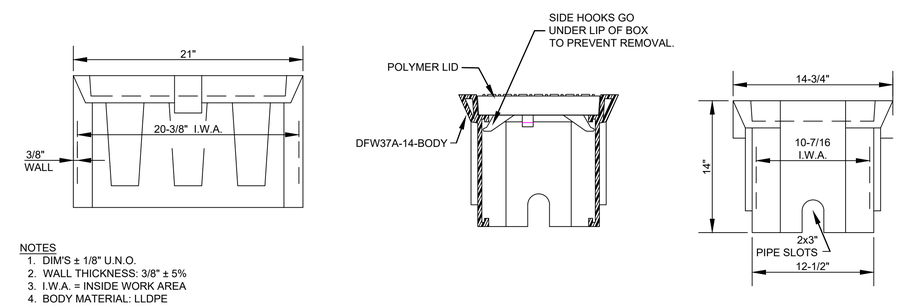

NOTES
1. DIM'S ± 1/8" U.N.O.
2. WALL THICKNESS: 3/8" ± 5%
3. I.W.A. = INSIDE WORK AREA
4. BODY MATERIAL: LLDPE
5. LID MATERIAL: HDPE

DFW37A-14-BODY

WATER METER BOX AND LID

N.T.S.

CITY OF CELINA				
WATER DETAILS 3				
STANDARD DETAILS				
Life Connected.				
DESIGNED BY: C.O	REV. BY	DATE	SYMBOL	DATE: MAY, 2020
	C.O			
CHECKED BY: K.B	SCALE : NOT TO SCALE			SHEET NO.: W3

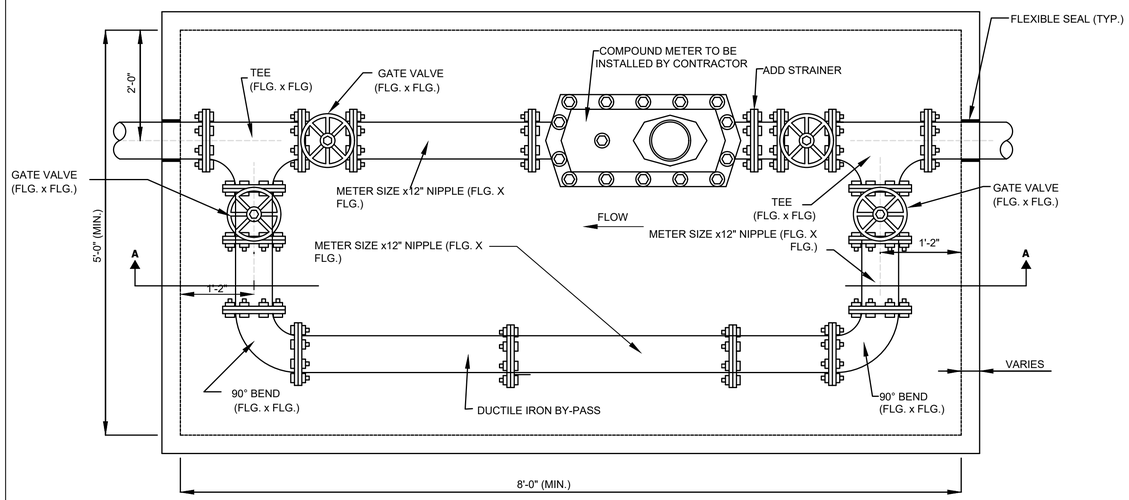

PLAN VIEW

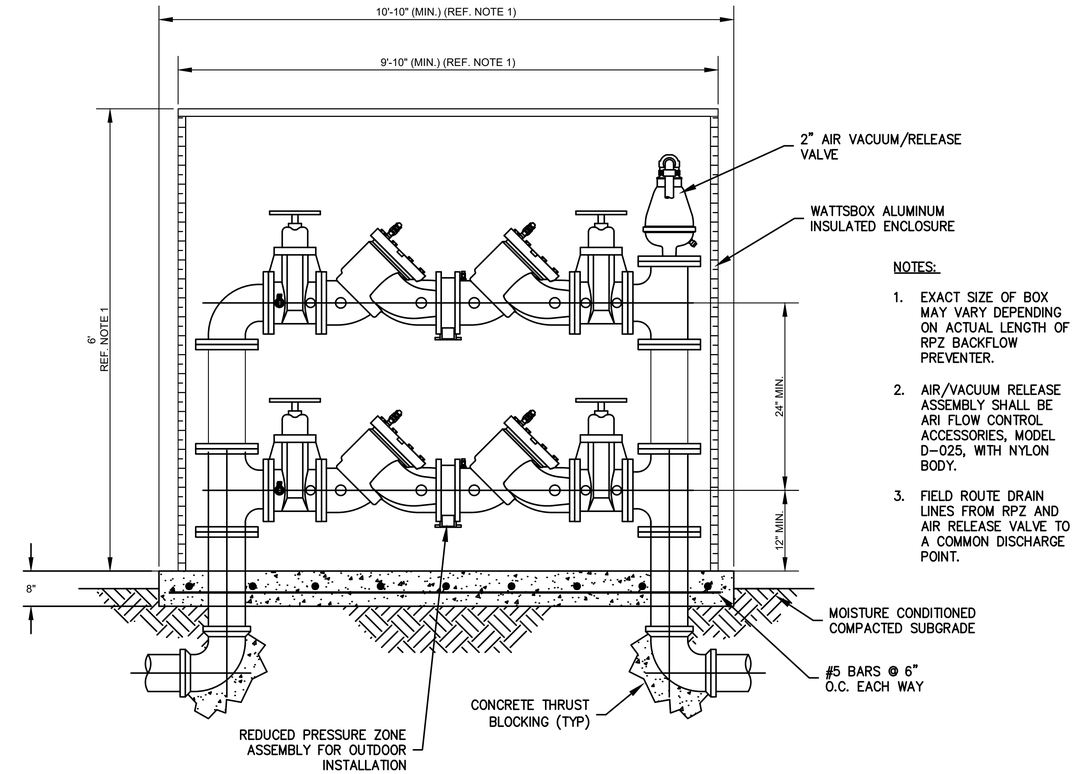

NOTES:

1. EXACT SIZE OF BOX MAY VARY DEPENDING ON ACTUAL LENGTH OF RPZ BACKFLOW PREVENTER.
2. AIR/VACUUM RELEASE ASSEMBLY SHALL BE ARI FLOW CONTROL ACCESSORIES, MODEL D-025, WITH NYLON BODY.
3. FIELD ROUTE DRAIN LINES FROM RPZ AND AIR RELEASE VALVE TO A COMMON DISCHARGE POINT.

BACKFLOW PREVENTER (TO BE USED FOR SINGLE WATER FEEDS)

N.T.S.

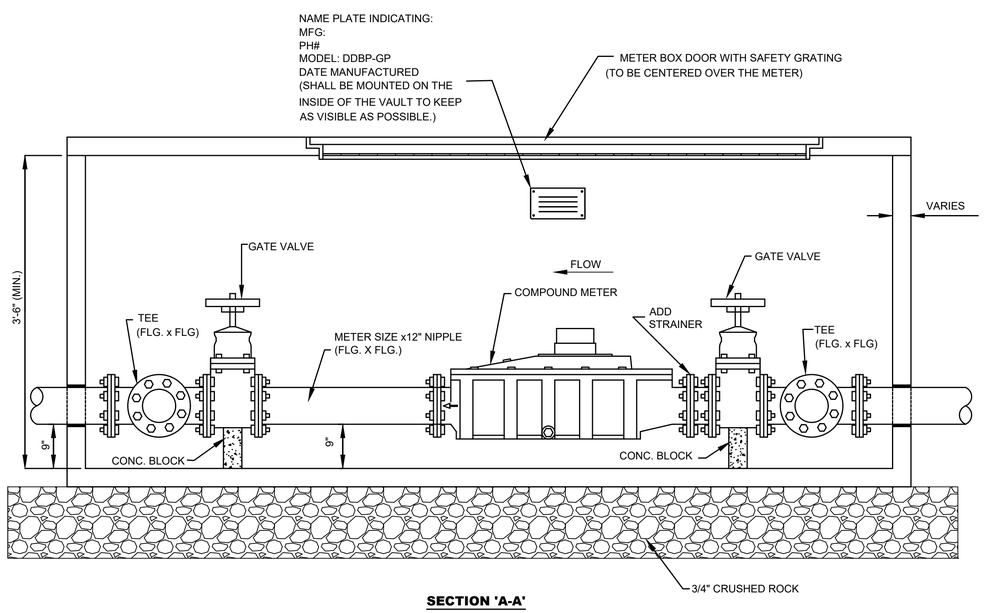

SECTION 'A-A'

WATER METER VAULT

N.T.S.

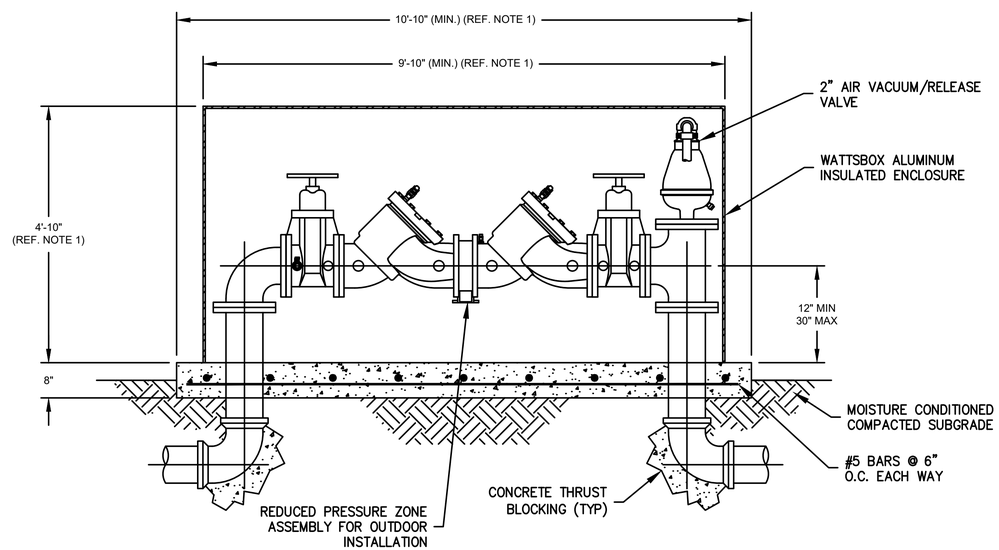

BACKFLOW PREVENTER

N.T.S.

CITY OF CELINA

WATER DETAILS 5

STANDARD DETAILS

CELINA TEXAS est. 1874

Life Connected.

DESIGNED BY: C.O	REV. BY	DATE	SYMBOL	DATE: MAY, 2020
	C.O			
CHECKED BY: K.B	SCALE : NOT TO SCALE			SHEET NO.: W5

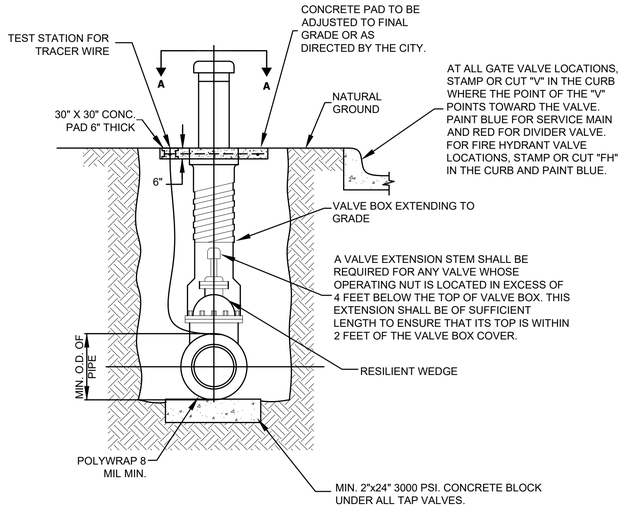

TYPICAL GATE VALVE SETTING AND BOX

N.T.S.

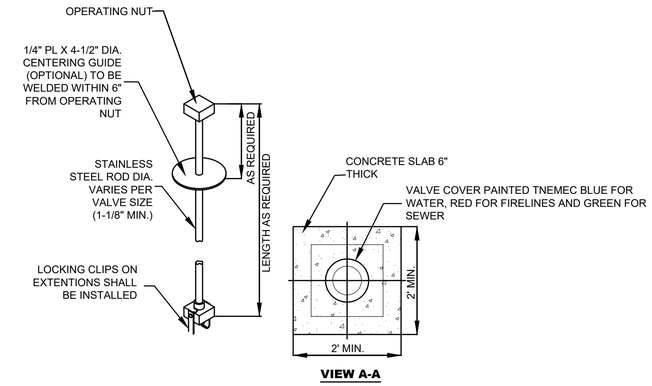

GATE VALVE EXTENSION STEM

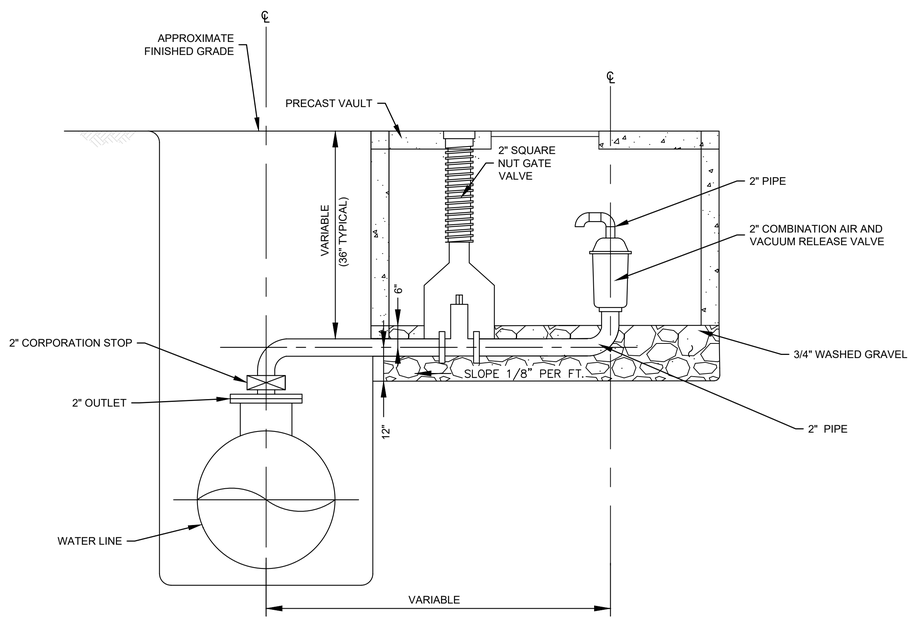

COMBINATION AIR AND VACUUM RELEASE VALVE AND VAULT DETAIL

N.T.S.

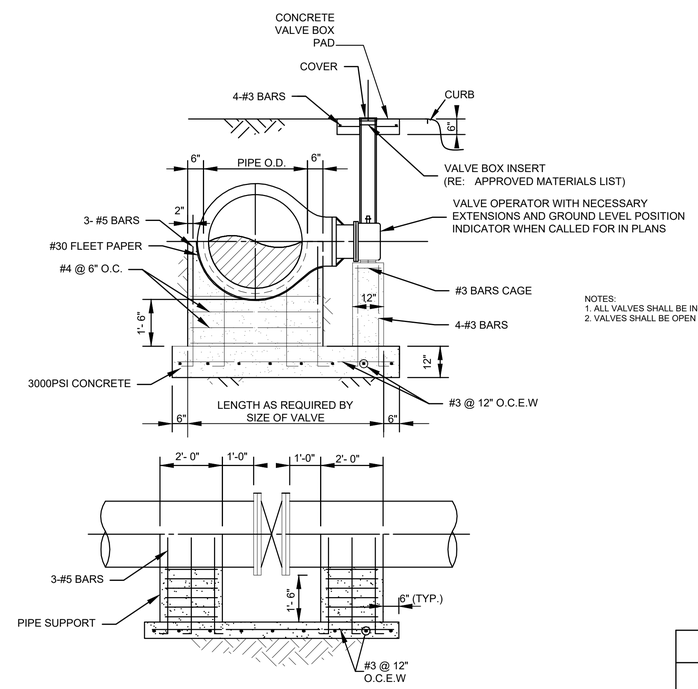

NOTES:
1. ALL VALVES SHALL BE INSTALLED ON THE CURB SIDE
2. VALVES SHALL BE OPEN LEFT

BUTTERFLY VALVE

N.T.S.

CITY OF CELINA

WATER DETAILS 4

STANDARD DETAILS

CELINA TEXAS
Life Connected.

DESIGNED BY: C.O	REV. BY	DATE	SYMBOL	DATE: MAY, 2020
	C.O			
CHECKED BY: K.B	SCALE : NOT TO SCALE			SHEET NO.: W4

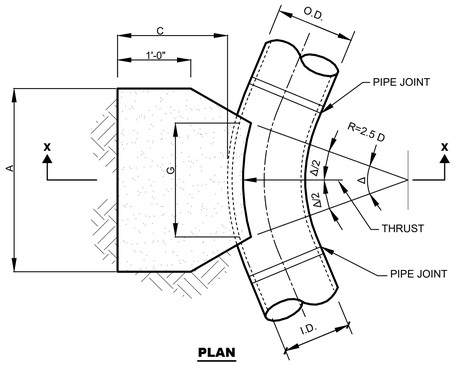

PLAN

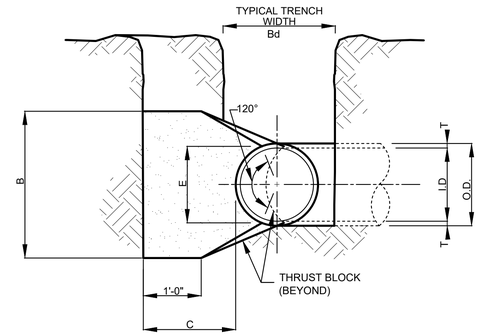

SECTION X-X

I.D. (IN.)	T (IN.)	Δ ≥ 22.50° C (IN.)	E (IN.)
4,6,8	0.4	1.5	0.9
10,12	0.5	1.5	1.2
16,18	0.6	1.5	1.6
20	0.7	1.5	1.8
24	0.9	1.5	2.1
30	2.9	1.9	2.6
36	4.5	2.3	3.3
42	5.0	2.6	3.8
48	5.5	3.0	4.3
54	6.0	3.4	4.8
60	6.5	3.8	5.3
66	6.8	4.1	5.7
72	7.5	4.5	6.3
78	7.5	4.9	6.7
84	8.0	5.3	7.2
90	8.5	5.6	7.7
96	9.0	6.0	8.2

	Δ = 22.50°							
			EARTH			ROCK		
I.D. (IN.)	G (FT.)	THRUST TONS	A (FT.)	B (FT.)	VOL. (C.Y.)	A (FT.)	B (FT.)	VOL. (C.Y.)
4,6,8	0.8	2.0	1.5	1.5	0.1	1.0	1.0	0.1
10,12	1.1	4.4	2.0	2.5	0.3	1.5	1.5	0.1
16,18	1.6	9.9	3.0	3.5	0.6	2.0	2.5	0.3
20	1.8	12.3	3.5	3.5	0.7	2.0	3.0	0.4
24	2.2	17.7	4.0	4.5	1.0	3.0	3.5	0.5
30	2.7	20.7	5.0	4.5	1.5	3.0	4.0	0.8
36	3.3	29.8	5.5	5.5	2.3	4.0	4.0	1.3
42	3.8	40.5	7.0	6.0	3.9	4.5	5.0	2.1
48	4.4	52.9	8.0	7.0	5.7	4.5	6.0	2.8
54	4.9	67.0	9.0	8.0	8.0	6.0	6.0	4.1
60	5.5	82.7	9.5	9.0	10.6	6.0	7.0	5.3
66	6.0	100.1	10.5	10.0	14.1	6.5	8.0	7.2
72	6.6	119.1	11.0	11.0	17.6	7.5	8.0	9.1
78	7.1	139.8	12.0	12.0	22.5	8.0	9.0	11.7
84	7.5	162.1	13.0	12.5	27.2	8.5	10.0	14.8
90	8.2	186.0	14.0	13.5	33.7	9.5	10.0	17.7
96	8.7	211.7	15.0	14.5	41.2	10.0	11.0	21.8

	Δ = 45°							
			EARTH			ROCK		
I.D. (IN.)	G (FT.)	THRUST TONS	A (FT.)	B (FT.)	VOL. (C.Y.)	A (FT.)	B (FT.)	VOL. (C.Y.)
4,6,8	1.5	3.9	2.0	2.0	0.2	1.5	1.5	0.1
10,12	2.2	8.7	3.5	2.5	0.5	2.0	2.5	0.3
16,18	3.2	19.5	4.5	4.5	1.2	3.0	3.5	0.6
20	3.6	24.1	5.5	4.5	1.5	3.5	3.5	0.7
24	4.3	34.6	8.0	4.5	2.3	4.5	4.0	1.1
30	5.4	40.6	8.5	5.0	3.2	5.5	4.0	1.6
36	6.5	58.5	10.0	6.0	5.3	6.5	4.5	2.6
42	7.5	79.6	11.5	7.0	6.1	8.0	5.0	4.2
48	8.6	104.0	13.0	8.0	11.9	9.0	6.0	6.3
54	9.7	131.5	15.0	9.0	17.1	10.5	6.5	8.9
60	10.7	162.4	16.5	10.0	23.1	11.0	7.5	12.0
66	11.8	196.5	18.0	11.0	30.1	12.0	8.5	16.2
72	12.9	233.9	19.5	12.0	38.6	14.0	8.5	20.7
78	13.9	274.5	21.5	13.0	49.8	14.5	9.5	25.9
84	15.0	318.4	23.0	14.0	61.2	15.5	10.5	32.6
90	16.1	365.5	24.5	15.0	74.5	17.5	10.5	39.6
96	17.1	415.6	26.0	16.0	89.5	18.5	11.5	48.5

	Δ = 90°							
			EARTH			ROCK		
I.D. (IN.)	G (FT.)	THRUST TONS	A (FT.)	B (FT.)	VOL. (C.Y.)	A (FT.)	B (FT.)	VOL. (C.Y.)
4,6,8	2.7	7.1	5.0	1.5	0.4	2.0	1.5	0.2
10,12	4.0	16.0	6.5	2.5	1.0	3.5	2.5	0.5
16,18	6.0	36.0	9.0	4.0	2.4	4.5	4.0	1.0
20	6.6	44.4	10.0	4.5	3.1	6.0	4.0	1.5
24	7.9	64.0	14.5	4.5	5.0	8.0	4.0	2.1
30	9.9	75.0	15.0	5.0	6.7	10.0	4.0	3.3
36	11.9	108.0	18.0	6.0	11.4	12.0	4.5	5.3
42	13.9	147.0	21.0	7.0	17.8	14.0	5.5	8.7
48	15.9	192.0	24.0	8.0	26.2	16.0	6.0	12.4
54	17.9	243.0	27.0	9.0	36.9	18.0	7.0	18.1
60	19.9	299.8	30.0	10.0	50.3	20.0	7.5	24.0
66	21.8	362.8	33.0	11.0	66.2	22.0	8.5	32.5
72	23.8	431.8	36.0	12.0	85.6	24.0	9.0	41.0
78	25.7	506.7	39.0	13.0	108.2	26.0	10.0	53.2
84	27.7	587.7	42.0	14.0	134.4	28.0	10.5	64.8
90	29.0	674.6	45.0	15.0	164.9	30.0	11.5	81.2
96	31.6	767.5	48.0	16.0	199.0	32.0	12.0	95.1

HORIZONTAL THRUST BLOCK AT PIPE BEND

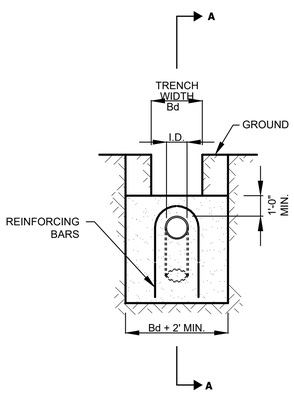

ELEVATION B-B

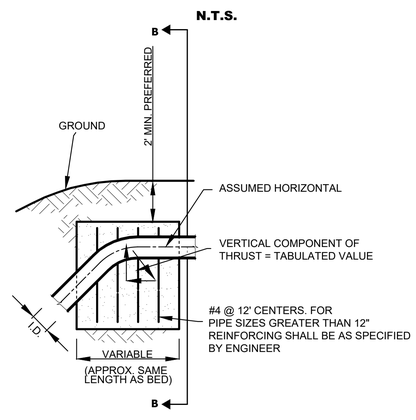

SECTION A-A

Δ	22.5°		45°		90°		Δ
I.D. (IN.)	THRUST TONS	VOL. (C.Y.)	THRUST TONS	VOL. (C.Y.)	THRUST TONS	VOL. (C.Y.)	I.D. (IN.)
4,6,8	2.0	1.0	3.6	1.8	5.0	2.5	4,6,8
10,12	4.3	2.2	8.0	4.0	11.3	5.7	10,12
16,18	9.7	4.9	18.0	9.0	25.5	12.7	16,18
20	12.0	6.0	22.2	11.1	31.4	15.7	20
24	17.3	8.7	32.0	16.0	45.2	22.6	24
30	20.3	10.1	37.5	18.8	53.1	26.5	30
36	29.2	14.6	54.0	27.0	76.4	38.2	36
42	39.8	19.9	73.5	36.7	104.0	52.0	42
48	51.9	26.0	96.0	48.0	136.0	67.9	48
54	65.7	32.9	122.0	60.7	172.0	85.9	54
60	81.2	40.6	150.0	75.0	212.0	106.0	60
66	98.2	49.1	182.0	90.7	257.0	128.0	66
72	117.0	58.4	216.0	108.0	305.0	153.0	72
78	137.0	68.6	254.0	127.0	358.0	179.0	78
84	159.0	79.5	294.0	147.0	416.0	208.0	84
90	183.0	91.3	337.0	169.0	477.0	239.0	90
96	208.0	104.0	384.0	192.0	543.0	272.0	96

VERTICAL THRUST BLOCK AT PIPE BEND

N.T.S.

CITY OF CELINA

WATER DETAILS 6

STANDARD DETAILS

CELINA TEXAS est 1874

Life Connected.

DESIGNED BY: C.O	REV. BY	DATE	SYMBOL	DATE: SEPTEMBER, 2019
	C.O			
CHECKED BY: K.B	SCALE : NOT TO SCALE			SHEET NO.: W6

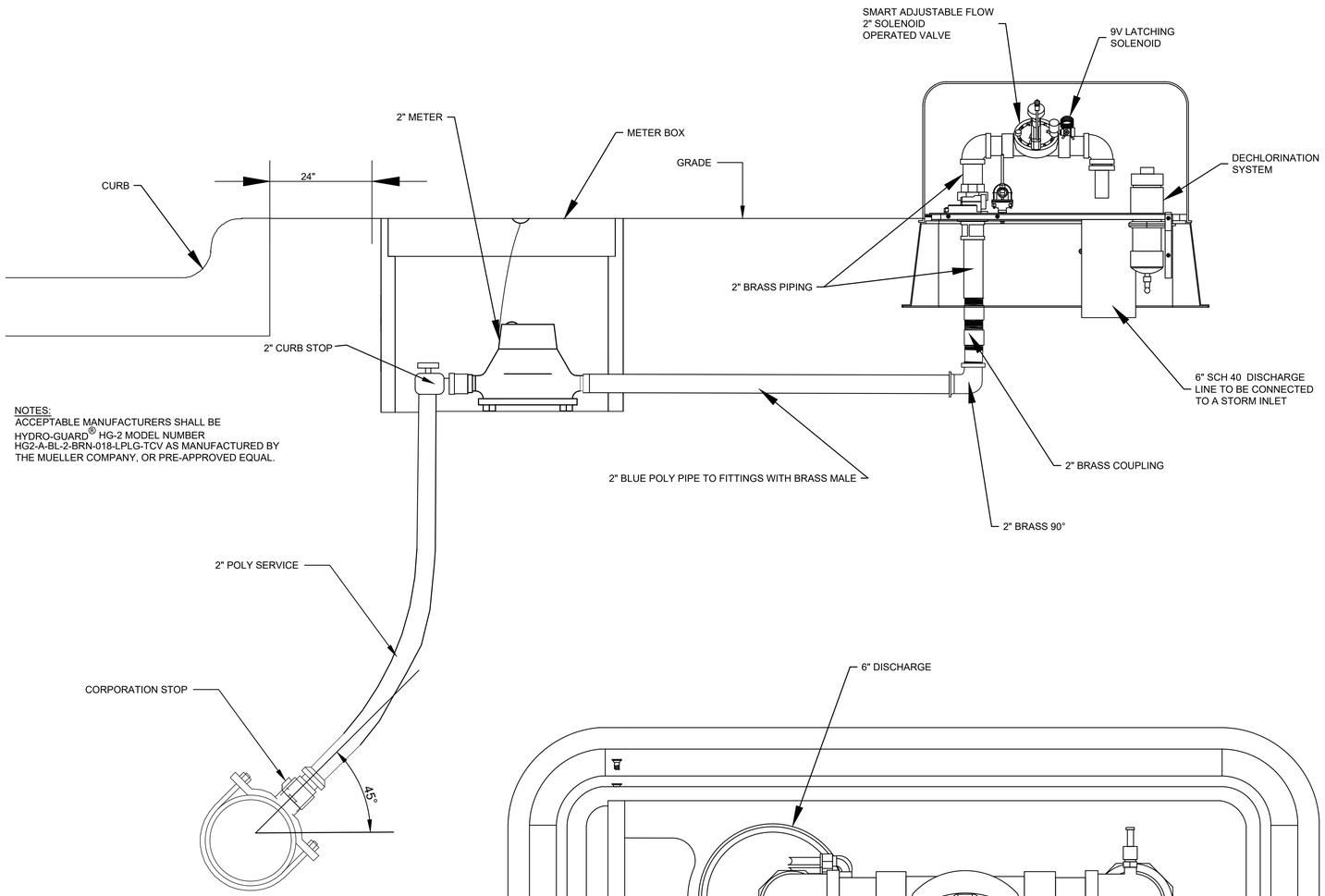

NOTES:
ACCEPTABLE MANUFACTURERS SHALL BE
HYDRO-GUARD® HG-2 MODEL NUMBER
HG2-A-BL-2-BRN-018-LPLG-TCV AS MANUFACTURED BY
THE MUELLER COMPANY, OR PRE-APPROVED EQUAL.

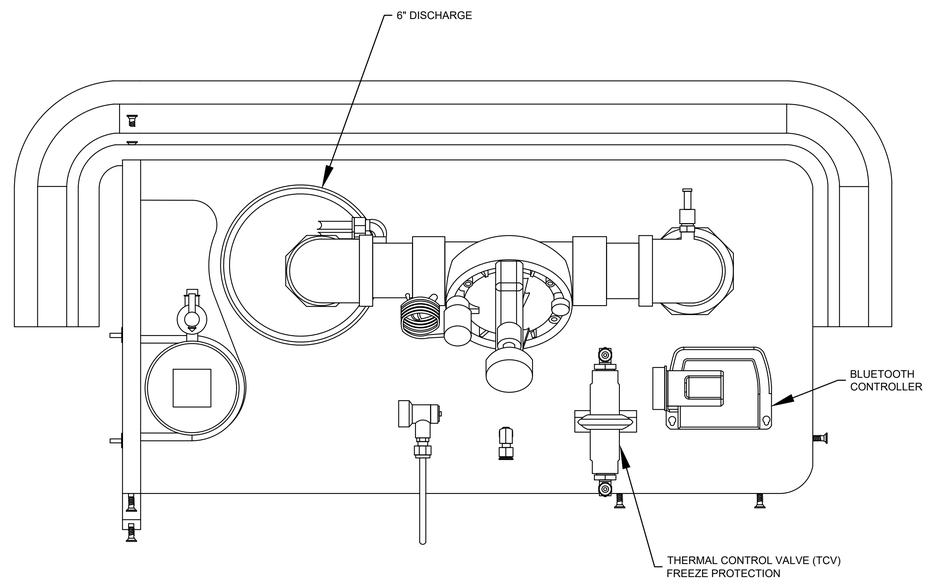

PLAN VIEW

AUTOMATIC WATER DISTRIBUTION FLUSHING EQUIPMENT

N.T.S.

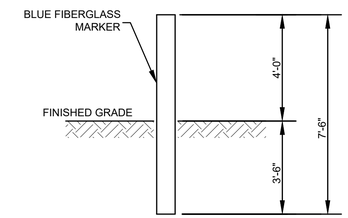

ELEVATION

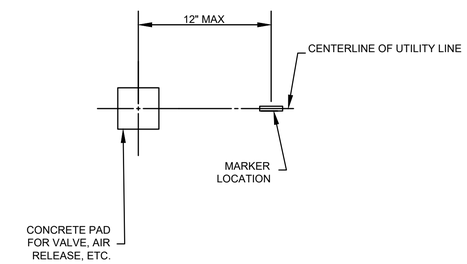

FIELD INSTALLATION DETAIL

OFFSITE WATER MAIN MARKER

N.T.S.

CITY OF CELINA				
WATER DETAILS 7				
STANDARD DETAILS				
Life Connected.				
DESIGNED BY: C.O	REV. BY	DATE	SYMBOL	DATE: MAY, 2020
	C.O			
CHECKED BY: K.B	SCALE : NOT TO SCALE			SHEET NO.: W7

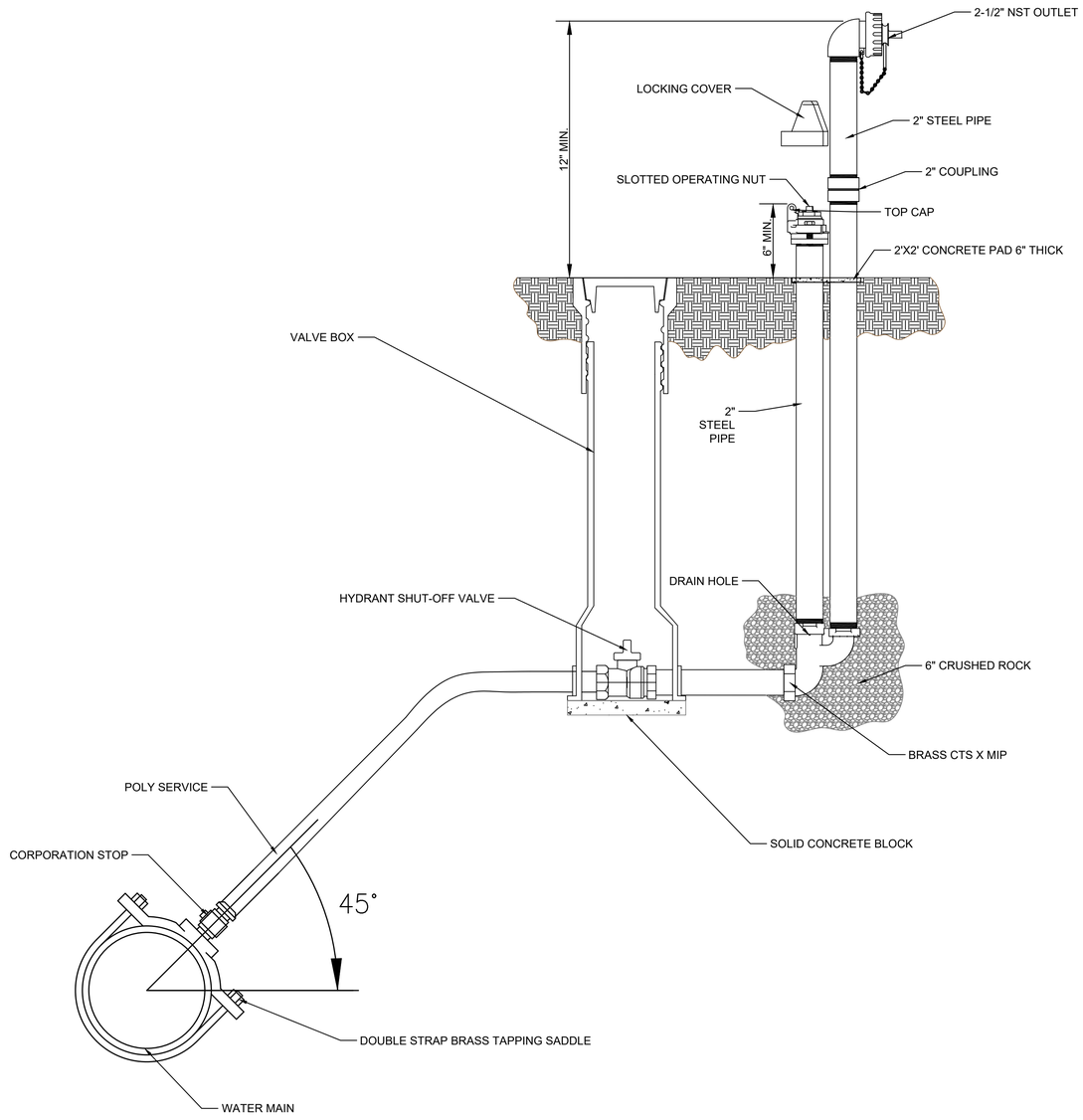

POST HYDRANT TO BE INSTALLED AT TEMPORARY WATER MAIN DEAD ENDS

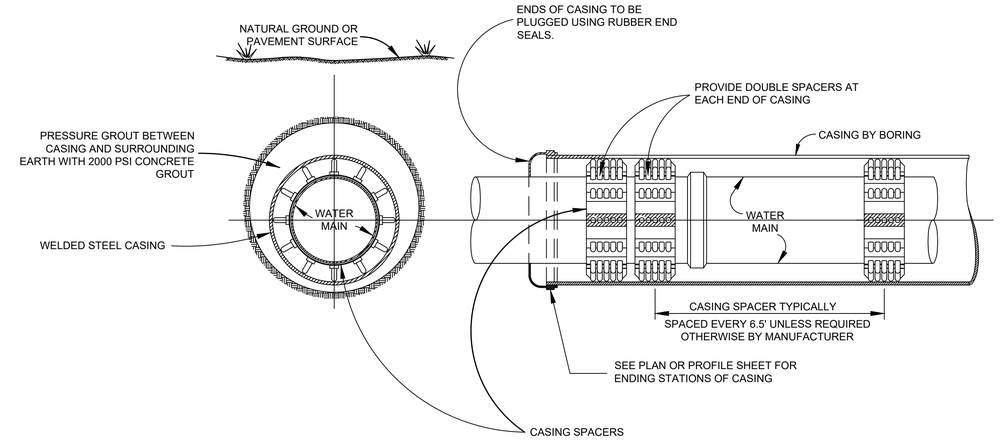

BORING DETAIL

N.T.S.

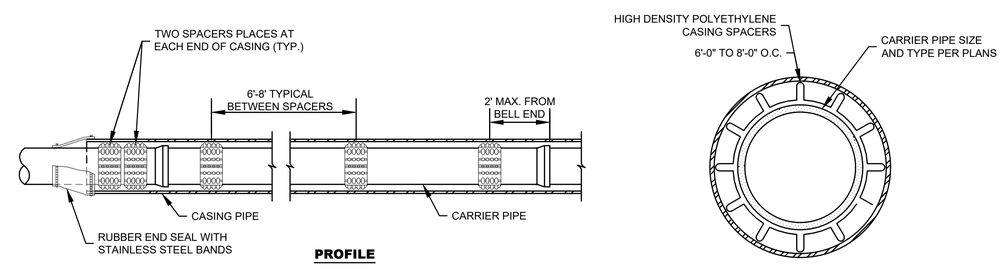

REFER TO APPROVED MATERIALS LIST FOR CASING SPACERS

CASING SPACER DETAIL

N.T.S.

CITY OF CELINA				
WATER DETAILS 8				
STANDARD DETAILS				
CELINA TEXAS est. 1879 Life Connected.				
DESIGNED BY: C.O	REV. BY	DATE	SYMBOL	DATE: MAY, 2020
	C.O			
CHECKED BY: K.B	SCALE : NOT TO SCALE			SHEET NO.: W8

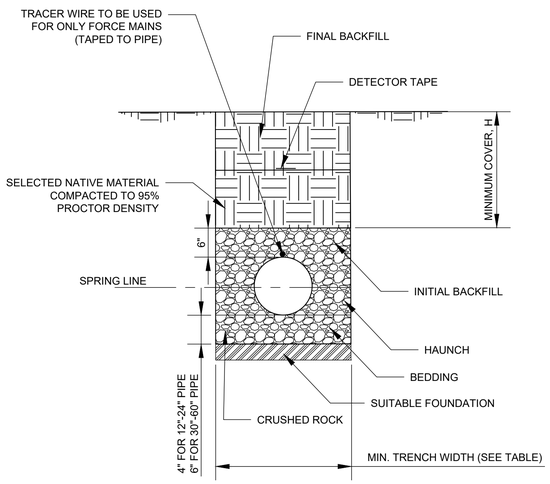

TABLE 1: RECOMMENDED MINIMUM TRENCH WIDTHS	
PIPE DIAMETER	MINIMUM TRENCH WIDTH
12"	30"
15"	34"
18"	39"
24"	48"
21"	43"
30"	56"
36"	64"
42"	72"
48"	80"
60"	96"

TABLE 2: MINIMUM RECOMMENDED COVER BASED ON VEHICLE LOADING CONDITIONS		
PIPE DIAMETER	H-25	HEAVY CONSTRUCTION (75T AXLE LOAD)*
12"-48"	12"	48"
60"	24"	60"
* VEHICLE IN EXCESS OF 75FT MAY REQUIRE ADDITIONAL COVER		

TABLE 3:MAXIMUM COVER FOR ADS SANITITE HP PIPE IN FEET	
PIPE DIAMETER	COMPACTED
12"	40
15"	41
18"	43
21"	45
24"	37
30"	30
36"	29
42"	32
48"	33
60"	31

NOTES:

1. ALL PIPE SYSTEMS SHALL BE INSTALLED IN ACCORDANCE WITH ASTM D2321, "STANDARD PRACTICE FOR UNDERGROUND INSTALLATION OF THERMOPLASTIC PIPE FOR SEWERS AND OTHER GRAVITY FLOW APPLICATIONS", LATEST EDITION
2. MEASURES SHALL BE TAKEN TO PREVENT MIGRATION OF NATIVE FINES INTO BACKFILL MATERIAL.
3. THE CONTRACTOR SHALL PROVIDE DOCUMENTATION FOR ALL MATERIAL SPECIFICATIONS TO DESIGN ENGINEER FOR REVIEW AND APPROVAL.
4. FOUNDATION: WHERE THE TRENCH BOTTOM IS UNSTABLE, THE CONTRACTOR SHALL EXCAVATE TO A DEPTH REQUIRED BY THE ENGINEER AND REPLACE WITH SUITABLE MATERIAL AS SPECIFIED BY THE ENGINEER. AS AN ALTERNATIVE AND AT THE DISCRETION OF THE DESIGN ENGINEER, THE TRENCH BOTTOM MAY BE STABILIZED USING A GEOTEXTILE MATERIAL.
5. BEDDING: SUITABLE MATERIAL SHALL BE CLASS I (CRUSH ROCK $\frac{3}{4}$ INCH TO 1 $\frac{1}{2}$ INCHES IN SIZE). COMPACTION SHALL BE SPECIFIED BY THE ENGINEER IN ACCORDANCE WITH TABLE 3 FOR THE APPLICABLE FILL HEIGHT LISTED. UNLESS OTHERWISE NOTED BY THE ENGINEER, MINIMUM BEDDING THICKNESS SHALL BE 4" FOR 12"-24" DIAMETER PIPE; 6" FOR 30"-60" DIAMETER PIPE. THE MIDDLE $\frac{1}{3}$ BENEATH THE PIPE INVERT SHALL BE LOOSELY PLACED.
6. INITIAL BACKFILL: SUITABLE MATERIAL SHALL BE CLASS I AND SHALL BE IN THE PIPE ZONE EXTENDING NOT LESS THAN 6" ABOVE CROWN OF PIPE.
7. MINIMUM COVER SHALL BE 12" FOR PIPES SMALLER OR EQUAL TO 48" AND 24" FOR PIPES 60" AND BIGGER MEASURED FROM TOP OF PIPE TO BOTTOM OF FLEXIBLE OR RIGID PAVEMENT. MATERIAL SHALL BE COMPACTED TO 95% STANDARD PROCTOR DENSITY (SPD).

WASTEWATER PIPE EMBEDMENT DETAIL (SANITITE HP)

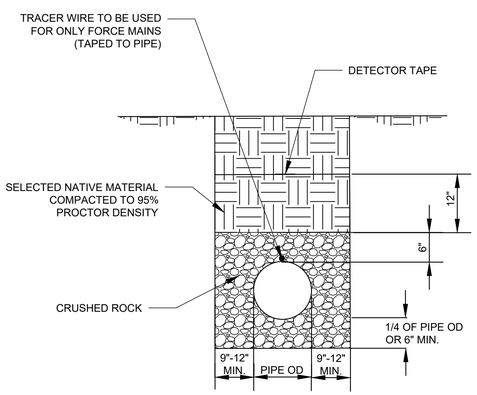

WASTEWATER PIPE EMBEDMENT DETAIL (PVC)

N.T.S.

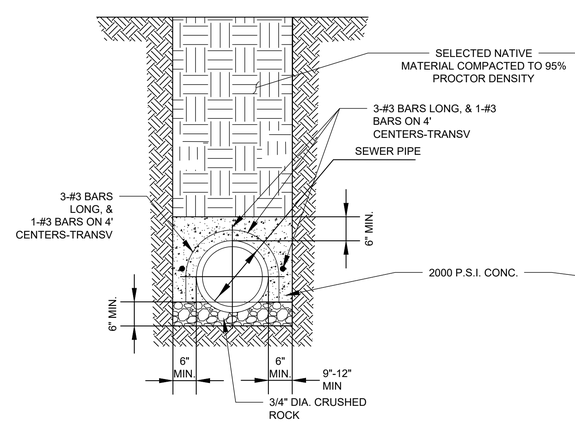

CAP DETAIL

N.T.S.

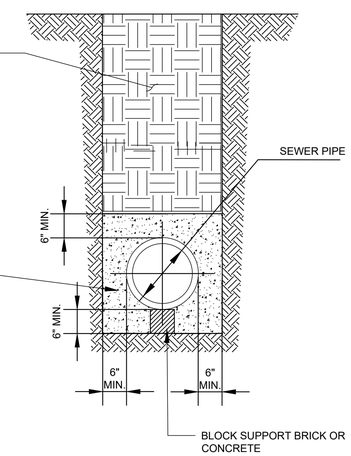

ENCASEMENT DETAIL

N.T.S.

CITY OF CELINA

WASTEWATER DETAILS 1

STANDARD DETAILS

Life Connected.

DESIGNED BY: C.O	REV. BY	DATE	SYMBOL	REV. DATE: MAY, 2020
	C.O			
CHECKED BY: K.B	SCALE : NOT TO SCALE			SHEET NO.:WW1

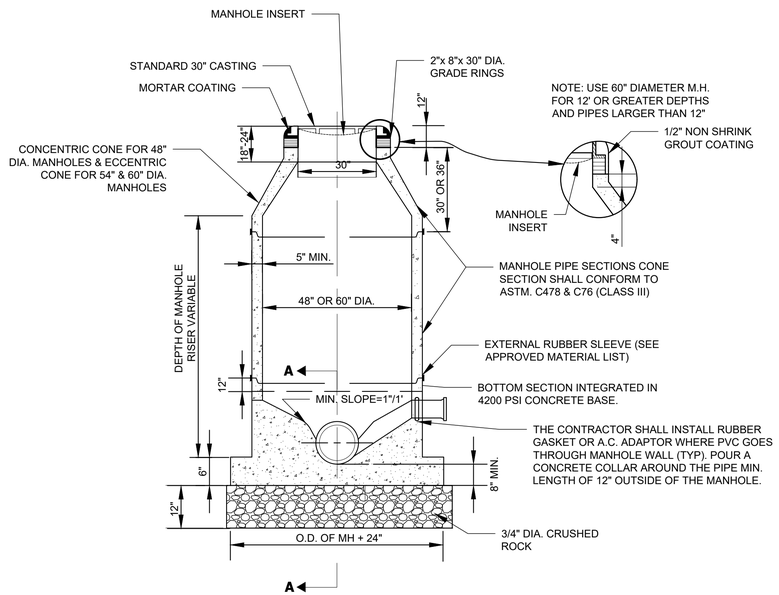

PRECAST CONCRETE MANHOLE (ASTM C478)

N.T.S.

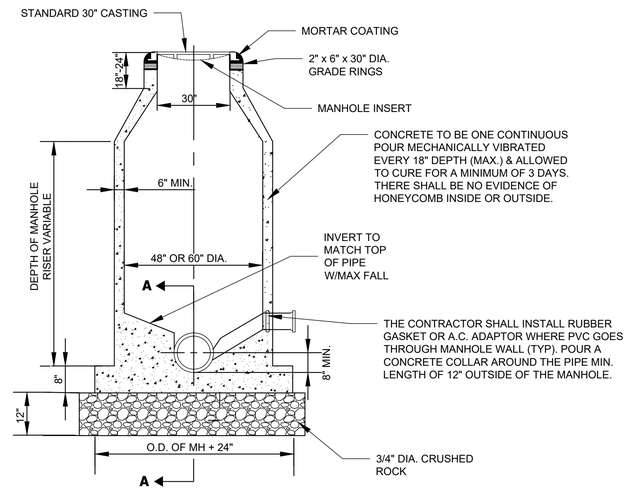

CAST IN PLACE CONCRETE MANHOLE

N.T.S.

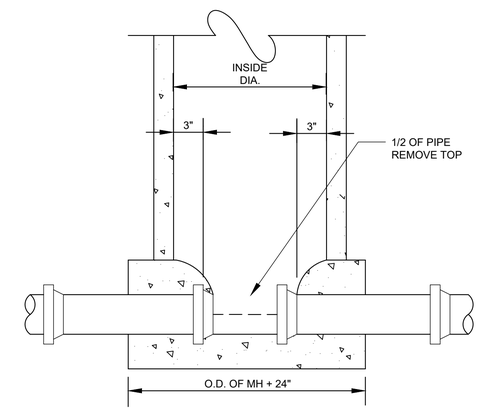

MANHOLE SECTION A-A

N.T.S.

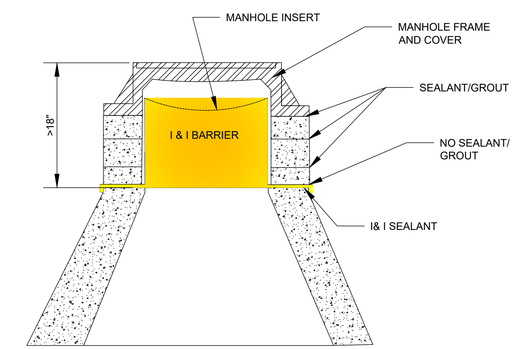

NOTE:
I&I BARRIER TO BE INSTALLED WITH GRADE RINGS WHEN MANHOLES ARE LOCATED IN A DITCH LINE

I & I BARRIER INSTALLATION

N.T.S.

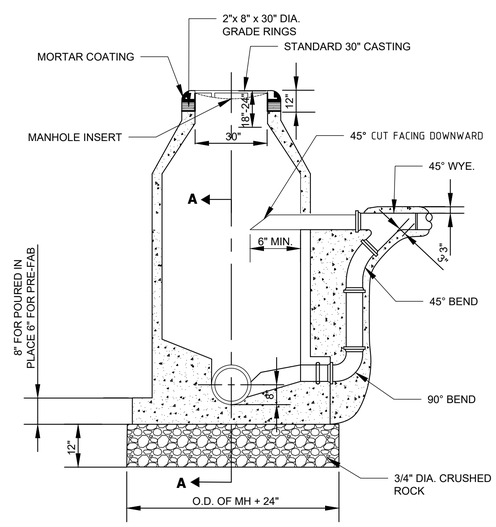

STANDARD DROP CONNECTION TO MANHOLE

N.T.S.

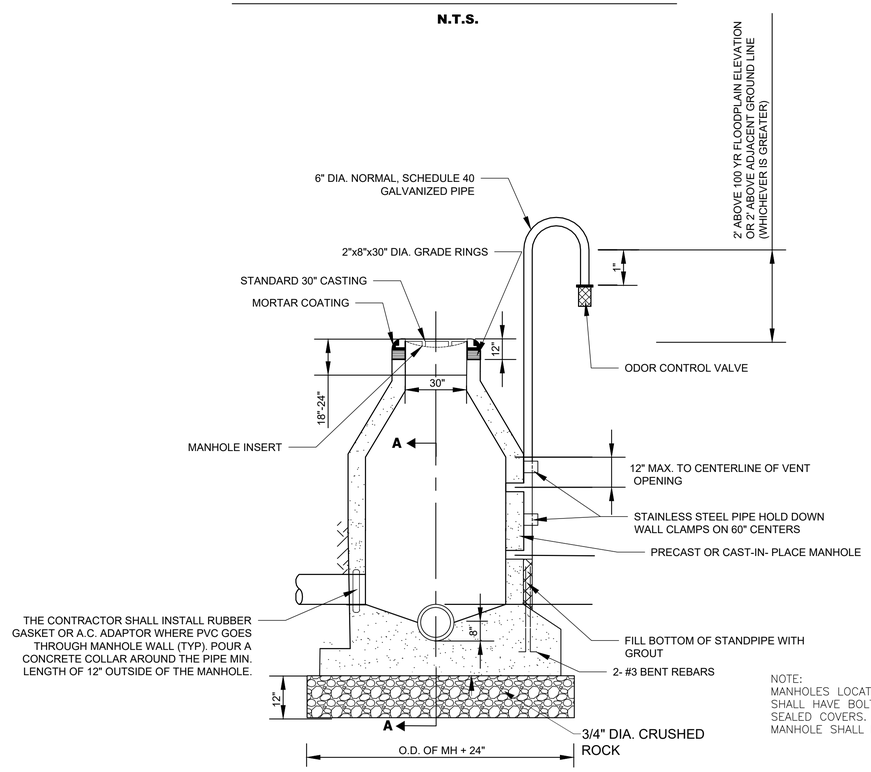

NOTE:
MANHOLES LOCATED IN FLOODPLAIN SHALL HAVE BOLTED DOWN AND SEALED COVERS. EVERY THIRD MANHOLE SHALL BE VENTED.

VENTED MANHOLE

N.T.S.

CITY OF CELINA

WASTEWATER DETAILS 2

STANDARD DETAILS

CELINA TEXAS EST. 1875

Life Connected.

DESIGNED BY: C.O	REV. BY	DATE	SYMBOL	REV. DATE: MAY, 2020
	C.O			
CHECKED BY: K.B	SCALE : NOT TO SCALE			SHEET NO.: W2

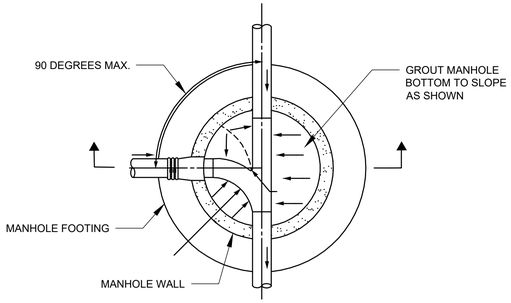

PLAN

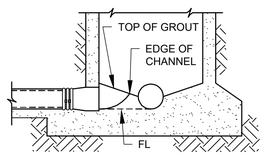

SECTION A-A

WASTEWATER MANHOLE LINE INTERSECTION

N.T.S.

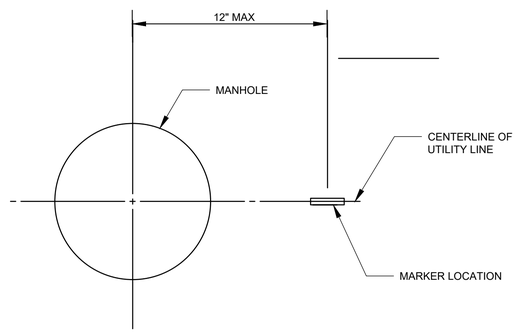

FIELD INSTALLATION DETAIL

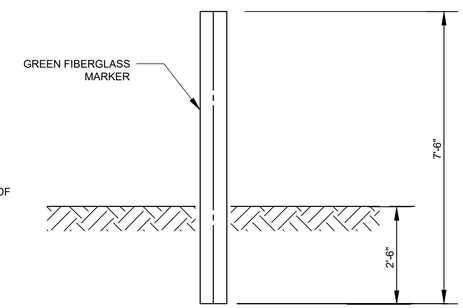

ELEVATION

OFFSITE WASTEWATER MARKER

N.T.S.

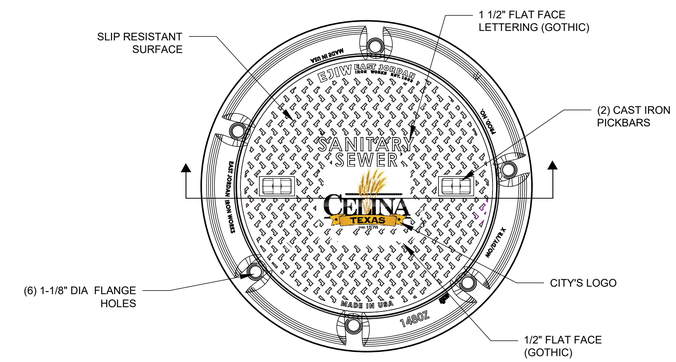

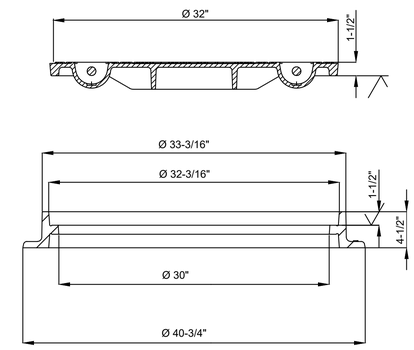

SECTION A-A

MANHOLE RING & COVER

N.T.S.

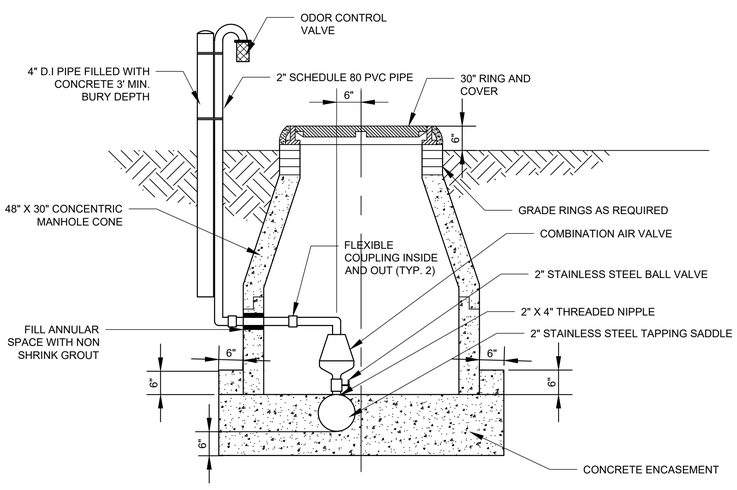

2" AIR RELEASE VALVE FOR FORCE MAIN

N.T.S.

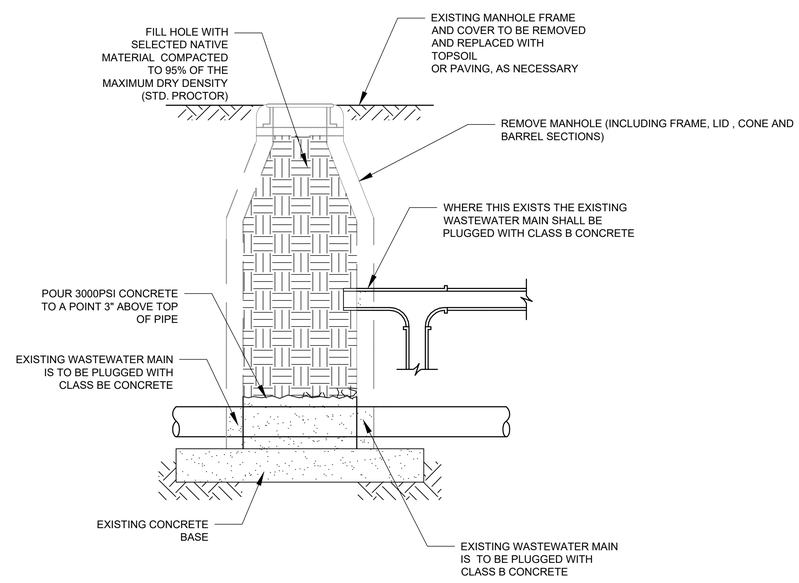

MANHOLE ABANDONMENT

N.T.S.

CITY OF CELINA				
WASTEWATER DETAILS 3				
STANDARD DETAILS				
CELINA TEXAS Life Connected.				
DESIGNED BY: C.O	REV. BY	DATE	SYMBOL	REV. DATE: MAY, 2020
	C.O			
CHECKED BY: G.J	SCALE : NOT TO SCALE			SHEET NO.WW3

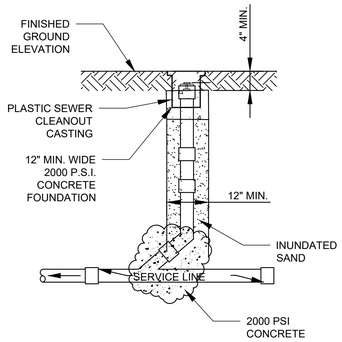

WASTEWATER SERVICE CLEAN-OUT DETAILS

N.T.S.

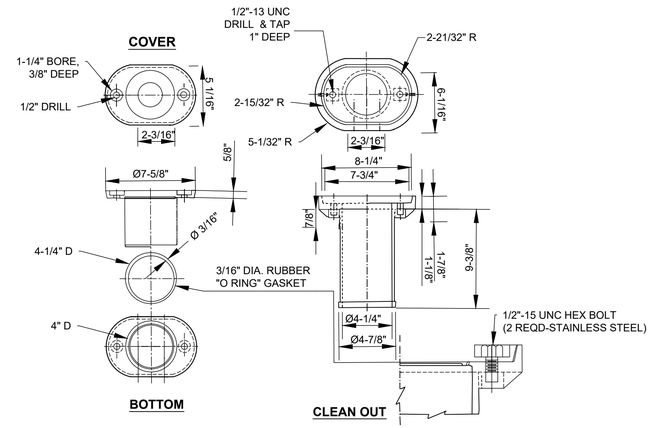

WASTEWATER LATERAL CLEANOUT FRAME AND COVER

N.T.S.

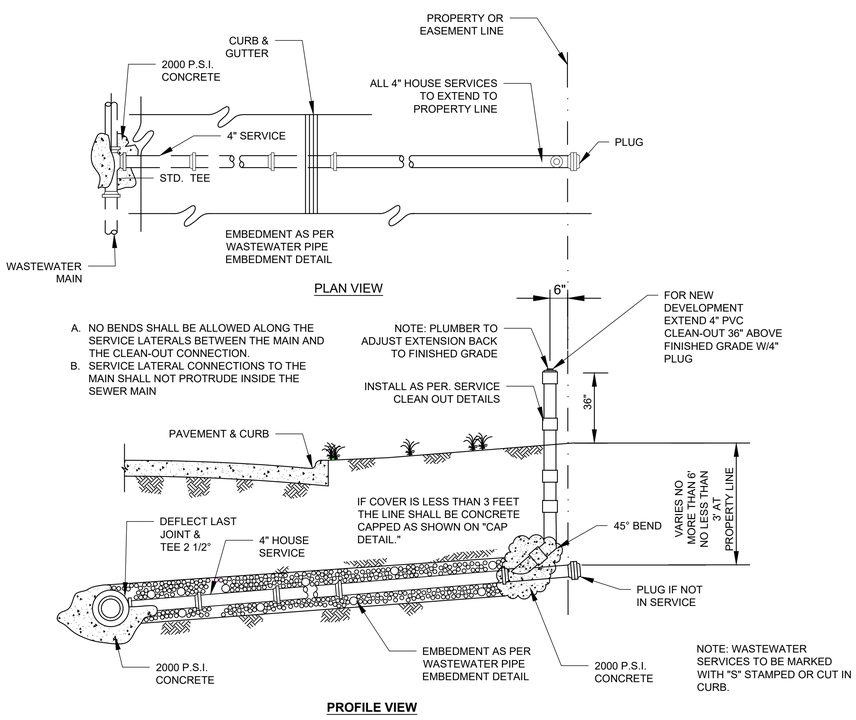

A. NO BENDS SHALL BE ALLOWED ALONG THE SERVICE LATERALS BETWEEN THE MAIN AND THE CLEAN-OUT CONNECTION.
B. SERVICE LATERAL CONNECTIONS TO THE MAIN SHALL NOT PROTRUDE INSIDE THE SEWER MAIN

STANDARD RESIDENTIAL WASTEWATER SERVICE CONNECTION

N.T.S.

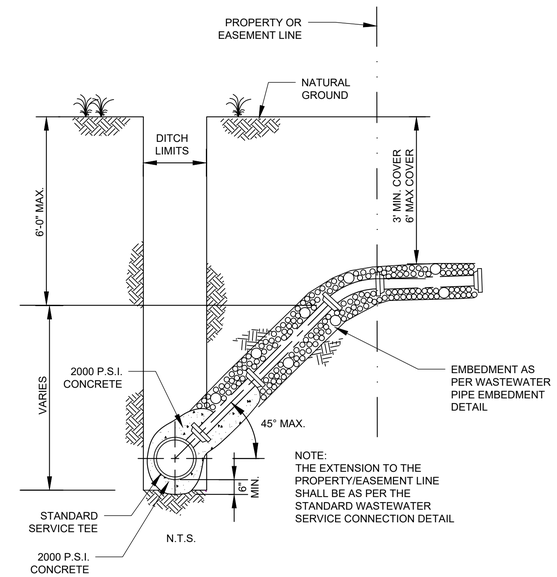

STANDARD DEEP CUT CONNECTION

N.T.S.

CITY OF CELINA

WASTEWATER DETAILS 4

STANDARD DETAILS

CELINA TEXAS est. 1876

Life Connected.

DESIGNED BY: CO	REV. BY	DATE	SYMBOL	REV. DATE: MAY, 2020
	C.O			
CHECKED BY: KB	SCALE : NOT TO SCALE			SHEET NO.: WW 4