ADDENDUM #1 - 1/19/07
ADDENDUM #2 - 1/24/07

$$$$$FILE$$$$$

DESIGN SPEEDS:
SERVICE ROAD: 45 MPH
US 380: 60 MPH
FM 428: 55 MPH

COLLIN COUNTY, TEXAS

GRADING, PAVING, DRAINAGE, AND STRUCTURES
DALLAS PARKWAY EXTENSION US 380 TO FM 428

2003 BOND PROJECT #03-13

SPECIFICATIONS ADOPTED BY THE TEXAS DEPARTMENT OF TRANSPORTATION, JUNE 1, 2004, AND SELECTED SPECIAL PROVISIONS AND SPECIAL SPECIFICATIONS SHALL GOVERN ON THIS PROJECT.

VOLUME 1 OF 1

FROM: US 380 TO: FM 428
NET LENGTH OF PROJECT: 32642.39 FT = 6.182 MILE(S)
ROADWAY LENGTH: 32,002.39 FT = 6.061 MILE(S)
BRIDGE LENGTH: 640.00 FT = 0.121 MILE(S)

CONSTRUCT TWO LANE SERVICE ROAD ON NEW LOCATION CONSISTING OF GRADING, DRAINAGE, STRUCTURES, CONCRETE & ASPHALT PAVEMENTS, SIGNING, AND PAVEMENT MARKINGS.

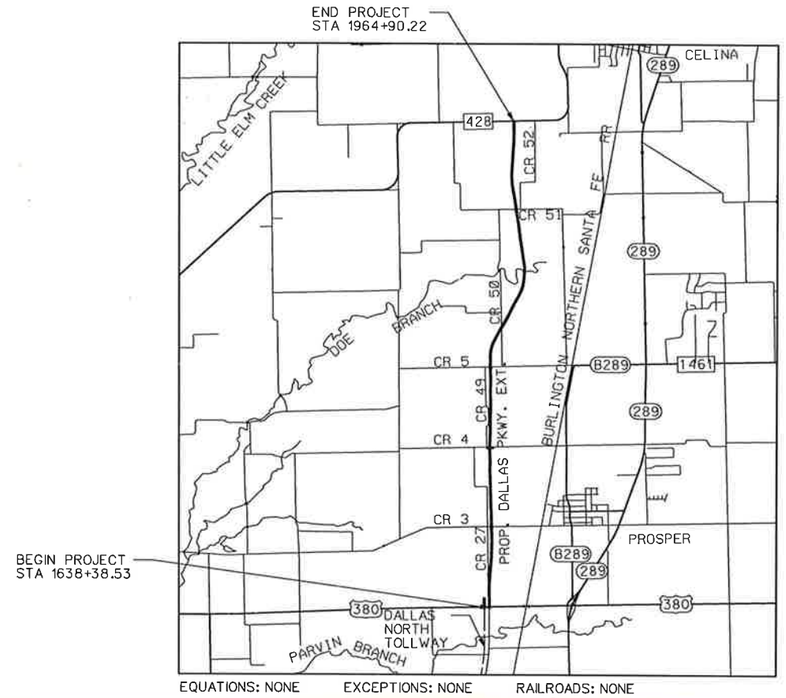

SCALE
N.T.S.

EQUATIONS: NONE EXCEPTIONS: NONE RAILROADS: NONE

COUNTY JUDGE:
RON HARRIS

COUNTY COMMISIONER:
PRECINCT 1 PHYLLIS COLE
PRECINCT 2 JERRY HOAGLAND
PRECINCT 3 JOE JAYNES
PRECINCT 4 JACK HATCHELL

DIRECTOR OF ENGINEERING:
RUBEN E. DELGADO, P.E.

COLLIN COUNTY

"CONSTRUCTION RECORD DRAWINGS_8-01-2009

Prepared by:
HALFF ASSOCIATES, INC.

Deri D. Gabre
Project Manager
Date: 12-28-06

Halff Associates
ENGINEERS . ARCHITECTS . SCIENTISTS . PLANNERS . SURVEYORS
3801 Parkwood Blvd., Suite 500
Frisco, Texas 75034
TEL (214) 618-4570
FAX (214) 618-4574

LETTING DATE: _____
CONTRACTOR: _____
CONTRACTOR'S ADDRESS: _____

DATE WORK BEGAN: _____
DATE WORK WAS COMPLETED: _____
DATE WORK WAS ACCEPTED: _____

AS BUILT PLANS
FINAL RECORD DRAWING DATE: _____

CONSTRUCTION MANAGER

P-200612-01

$$$$$FILE$$$$$ $$$DATE$$$ $$$TIME$$$

SHEET NO	DESCRIPTION
GENERAL	
1	TITLE SHEET
2	INDEX OF SHEETS
3	PROJECT LAYOUT
4	EXISTING TYPICAL SECTIONS
5 - 7	PROPOSED TYPICAL SECTIONS
8 - 9	ESTIMATE AND QUANTITY
10 - 16	ITEM SUMMARY
17	EARTHWORK SUMMARY
TRAFFIC CONTROL PLANS	
18	TRAFFIC CONTROL PLAN - NOTES
19	TRAFFIC CONTROL PLAN - ADVANCE WARNING/ROAD CLOSURE
20 - 21	TRAFFIC CONTROL PLAN - US 380/CR 27
22 - 23	TRAFFIC CONTROL PLAN - CR 3
24 - 25	TRAFFIC CONTROL PLAN - CR 4
26 - 27	TRAFFIC CONTROL PLAN - CR 5
28 - 29	TRAFFIC CONTROL PLAN - CR 50
30 - 31	TRAFFIC CONTROL PLAN - CR 51
32	TRAFFIC CONTROL PLAN - FM 428
TxDOT STANDARD DETAILS:	
33	BC(2)-03 - BARRICADE AND CONSTRUCTION STANDARD
34	BC(4)-03 - BARRICADE AND CONSTRUCTION STANDARD
35	BC(5)-03 - BARRICADE AND CONSTRUCTION STANDARD
36	BC(6)-03 - BARRICADE AND CONSTRUCTION STANDARD
37	BC(7)-03 - BARRICADE AND CONSTRUCTION STANDARD
38	BC(8)-03 - BARRICADE AND CONSTRUCTION STANDARD
39	BC(9)-03 - BARRICADE AND CONSTRUCTION STANDARD
40	BC(10)-03 - BARRICADE AND CONSTRUCTION STANDARD
41	BC(11)-03 - BARRICADE AND CONSTRUCTION STANDARD
42	LPCB(1)-92 - LOW PROFILE CONCRETE BARRIER
43	LPCB(2)-92 - LOW PROFILE CONCRETE BARRIER
44	TCP(1-1)-98 - TRAFFIC CONTROL PLAN
45	TCP(1-2)-98 - TRAFFIC CONTROL PLAN
46	TCP(3-3)-98 - TRAFFIC CONTROL PLAN
47	TCP(7-1)-98 - TRAFFIC CONTROL PLAN
48	WZ(BRK)-03 - WORK ZONE GIVE US A BRAKE
49	WZ(DERD)-03 - WORK ZONE SHORT TERM PAVEMENT MARKINGS DEAD END ROADWAY DETAILS
50	WZ(STPM)-03 - WORK ZONE SHORT TERM PAVEMENT MARKINGS
51	WZ(TD)-03 - WORK ZONE SHORT TERM PAVEMENT MARKINGS TRAFFIC CONTROL PLAN TYPICAL DETAILS
52	WZ(UL)-03 - WORK ZONE SHORT TERM PAVEMENT MARKINGS SIGNING FOR UNEVEN LANES
ROADWAY	
53 - 55	GEOMETRIC LAYOUT & SURVEY CONTROL DATA
56 - 88	PAVING PLAN - PROFILE - EAST SERVICE ROAD
89	PAVING PLAN - PROFILE - WEST SERVICE ROAD
90	PAVING PLAN - PROFILE - TEMPORARY CROSSOVER
91 - 98	PAVING PLAN - PROFILE - CROSS STREETS/US380/FM428
99 - 109	PROPOSED GRADING PLAN - CROSS STREETS/US380/FM428
110 - 111	PROPOSED GRADING PLAN - DOE BRANCH
112 - 113	MISCELLANEOUS PAVING DETAILS
TxDOT STANDARD DETAILS:	
114	BAS-C - BRIDGE APPROACH SLAB
115	CRR - CONCRETE RIP-RAP
116	JS-94 - CONCRETE PAVING DETAILS - JOINT SEALS
117	CPCD-94 - CONCRETE PAVEMENT DETAILS, CONTRACTION DESIGN
118	CCCG-01 - CONCRETE CURB AND CURB AND GUTTER
119	BED-03 - BRIDGE END DETAILS
120 - 121	SSTR - SINGLE SLOPE TRAFFIC RAILS
122	MBGF-03A - METAL BEAM GUARD FENCE
123	MBGF(TR)-05 - METAL BEAM GUARD FENCE TRANSITION
124	PM(1)-03 - PAVEMENT MARKINGS
125	PM(2)-00 - PAVEMENT MARKINGS
126	PM(4)-03 - PAVEMENT MARKINGS
127	PM(6)-01 - STANDARD PAVEMENT MARKINGS (ARROWS)
128	SGT(7)-03A - SINGLE GUARDRAIL TERMINAL
129	WF(2)-96 - BARBED WIRE AND WOVEN WIRE FENCE

SHEET NO	DESCRIPTION
BRIDGE	
130 - 131	DOE BRANCH BRIDGE LAYOUT
132	SUMMARY OF ESTIMATED QUANTITIES
133	DOE BRANCH BRIDGE ABUTMENT 1 DETAILS
134	DOE BRANCH BRIDGE ABUTMENT 9 DETAILS
135	DOE BRANCH BRIDGE ABUTMENT DETAILS
136	DOE BRANCH BRIDGE BENT 2 DETAILS
137	DOE BRANCH BRIDGE BENT 3 - 8 DETAILS
138	DOE BRANCH BRIDGE FRAMING PLAN UNIT 1
139 - 140	DOE BRANCH BRIDGE DECK PLAN UNIT 1
141	DOE BRANCH BRIDGE FRAMING PLAN UNIT 2
142 - 143	DOE BRANCH BRIDGE DECK PLAN UNIT 2
144	IBND - PRESTRESSED I-BEAM NON-STANDARD SPANS
TxDOT STANDARD DETAILS:	
145 - 146	IBD - PRESTRESSED CONCRETE I-BEAM DETAILS
147 - 148	IBEB - ELASTOMERIC BEARING AND BEAM END DETAILS
149	IBMS - MISCELLANEOUS SLAB DETAILS
150	IBTS - THICKENED SLAB END DETAILS
151	MEBR(C) - MINIMUM ERECTION AND BRACING REQUIREMENTS
152 - 155	PCP - PRESTRESSED CONCRETE PANELS
156 - 157	PMDF - PERMANENT METAL DECK FORMS
158	SEJ-A - SEALED EXPANSION JOINT DETAILS
DRAINAGE	
159 - 160	OFFSITE DRAINAGE AREA MAP
161 - 163	ROADWAY DRAINAGE AREA MAP
164 - 165	INLET & OFFSITE RUNOFF COMPUTATIONS
166 - 168	STORM DRAIN COMPUTATIONS
169	CULVERT COMPUTATIONS
170 - 202	DRAINAGE PLAN - PROFILE - EAST SERVICE ROAD
203	DRAINAGE PLAN - PROFILE - DITCH E5
204 - 219	CULVERT LAYOUT
220	MISCELLANEOUS DRAINAGE DETAILS
221 - 222	IL-H-G(MOD) - HORIZONTAL INLET TYPE H WITH GRATE
223	SETB-PD(MOD) - SAFETY END TREATMENT (MODIFIED)
TxDOT STANDARD DETAILS:	
224	CH-PW-S - CONCRETE HEADWALLS WITH PARALLEL WINGS FOR SKEWED PIPE CULVERTS
225	ECD - EXTENDED CURB DETAILS
226 - 227	IL-H-G - HORIZONTAL INLET TYPE H WITH GRATE
228	MC-6-16 - MULTIPLE BOX CULVERTS CAST-IN-PLACE 6' SPAN
229	MC-8-13 - MULTIPLE BOX CULVERTS CAST-IN-PLACE 8' SPAN
230	MC-10-7 - MULTIPLE BOX CULVERTS CAST-IN-PLACE 10' SPAN
231	MC-MD - MULTIPLE BOX CULVERTS CAST-IN-PLACE MISCELLANEOUS DETAILS
232	PW - CONCRETE WINGWALLS WITH PARALLEL WINGS FOR SKEWED AND NON-SKEWED BOX CULVERTS
233	SCC-3 & 4 - SINGLE BOX CULVERTS CAST-IN-PLACE
234	SCC-5 & 6 - SINGLE BOX CULVERTS CAST-IN-PLACE
1 234A	SCP-5 - SINGLE BOX CULVERTS PRECAST
234B	SCP-6 - SINGLE BOX CULVERTS PRECAST
235	SCC-7 - SINGLE BOX CULVERTS CAST-IN-PLACE
1 235A	SCP-7 - SINGLE BOX CULVERTS PRECAST
236	SCC-8 - SINGLE BOX CULVERTS CAST-IN-PLACE
237	SCP-MD - BOX CULVERTS PRECAST MISCELLANEOUS DETAILS
238 - 239	SETB-CD - SAFETY END TREATMENT FOR 0° BOX CULVERTS TYPE I - CROSS DRAINAGE
240 - 241	SETB-PD - SAFETY END TREATMENT FOR 0° BOX CULVERTS TYPE I - PARALLEL DRAINAGE
242 - 243	SETP-CD - SAFETY END TREATMENT FOR 12" DIA. TO 60"DIA. PIPE CULVERTS TYPE II - CROSS DRAINAGE
CITY OF FRISCO STANDARD DETAILS:	
244 - 245	INLETS
NTTA STANDARD DETAILS:	
246 - 247	CURB AND GRATE INLET - TYPE SS

SHEET NO	DESCRIPTION
TRAFFIC ITEMS	
248 - 250	TRAFFIC SIGNS LAYOUT
251 - 252	TRAFFIC SIGNS - SUMMARY OF SMALL SIGNS
TxDOT STANDARD DETAILS:	
253	D&OM(1)-04 - DELINEATOR & OBJECT MARKER INSTALLATION AND MATERIAL DESCRIPTION
254	D&OM(2)-04 - TYPICAL DELINEATOR & OBJECT MARKER PLACEMENT DETAILS
255	D&OM(3)-04 - DELINEATOR & OBJECT MARKER PLACEMENT DETAILS
256	D&OM(4)-04 - DELINEATOR & OBJECT MARKER PLACEMENT DETAILS
257	D&OM(5)-04 - DELINEATOR & OBJECT MARKER PLACEMENT DETAILS
258	SMD(GEN)-02 - SIGN MOUNTING DETAILS
259	SMD(SLIP-1)-02 - SIGN MOUNTING DETAILS
260	SMD(SLIP-2)-02 - SIGN MOUNTING DETAILS
261	SMD(SLIP-3)-02 - SIGN MOUNTING DETAILS
262	SMD(TWT)-02 - SIGN MOUNTING DETAILS
263	TSR(5)-03 - TYPICAL SIGN REQUIREMENTS
ENVIRONMENTAL	
264	SWP3 DATA SHEET
265 - 267	SWP3 LAYOUT
TxDOT STANDARD DETAILS:	
268	EC(1)-93-TEMPORARY EROSION, SEDIMENT AND WATER POLLUTION CONTROL MEASURES
269	EC(2)-93-TEMPORARY EROSION, SEDIMENT AND WATER POLLUTION CONTROL MEASURES
270	EC(3)-93-TEMPORARY EROSION, SEDIMENT AND WATER POLLUTION CONTROL MEASURES
271	EC(6)-93-TEMPORARY EROSION, SEDIMENT AND WATER POLLUTION CONTROL MEASURES

"CONSTRUCTION RECORD DRAWINGS_8-01-2009

THE STANDARD SHEETS SPECIFICALLY IDENTIFIED ABOVE HAVE BEEN SELECTED BY ME OR UNDER MY RESPONSIBLE SUPERVISION AS BEING APPLICABLE TO THIS PROJECT

STATE OF TEXAS
DENNIS D. SATRE
71590
REGISTERED
PROFESSIONAL ENGINEER
1/19/07

NO.	DATE	REVISION	APPROV.
1	1/19/07	ADDENDUM #1	D. SATRE

DALLAS PARKWAY EXTENSION

COLLIN COUNTY

INDEX OF SHEETS

Halff Associates, Inc.
ENGINEERS · ARCHITECTS · SCIENTISTS · PLANNERS · SURVEYORS

DRAWN MDB DATE DEC 2006 | DESIGNED DDS DATE
CHECKED DDS DATE | SCALE

BOND PROJECT NO. 03-13 SHEET 2 OF 271

3/19/2007 P-200612-01

9:29:47 AM
i:\23000s\23819\FRISCO\DGN\INDEX SHEET.dgn

i:\23000s\23819\frisco\dgn\23819plprp01.dgn

0 500 1000 1500 2000 3000
SCALE IN FEET

N

US 380

℄ STA 1641+41.68
BEGIN DALLAS PKWY. EXTENSION (WEST SERVICE ROAD)

℄ STA 1648+00.00
END DALLAS PKWY. EXTENSION (WEST SERVICE ROAD)

℄ STA 1638+38.53 ESR = ℄ STA 1180+77.36 US 380
BEGIN DALLAS PKWY. EXTENSION (EAST SERVICE ROAD)
BEGIN US 380 WIDENING

℄ STA 1186+87.00 US 380
END US 380 WIDENING

1650+00 1660+00 1670+00 1680+00 1690+00 1700+00 1710+00 1720+00 1730+00 1740+00 1750+00 1760+00 1770+00

MATCHLINE STA, TYP.

WEST RIGHT-OF-WAY LINE

EAST RIGHT-OF-WAY LINE

SHEET SEQUENCE #, TYP.

CR 27

FRONTIER PARKWAY (CR 5)

FIRST STREET (CR 3)

PROSPER TRAIL (CR 4)

MATCH LINE STA 1780+00

1790+00 1800+00 1810+00 1820+00 1830+00 1840+00 1850+00 1860+00 1870+00 1880+00 1890+00 1900+00 1910+00 1920+00

MATCH LINE STA 1780+00

MATCH LINE STA 1920+00

PROSPER CITY LIMITS (ETJ)

CELINA CITY LIMITS (ETJ)

CR 50

CR 970

CR 51

EAST RIGHT-OF-WAY LINE

DOE BRANCH

1930+00 1940+00 1950+00 1960+00

FM 428

℄ STA 4+78.56
BEGIN FM 428 IMPROVEMENTS

BL STA 1964+90.22
END DALLAS PKWY. EXTENSION (EAST SERVICE ROAD)

℄ STA 24+48.61
END FM 428 IMPROVEMENTS

NOTES:
1. PROJECT RIGHT-OF-WAY CORRIDOR VARIES 360' TO 400' WIDE. ALL RIGHT-OF-WAY PARCELS WITHIN CORRIDOR HAVE NOT BEEN ACQUIRED. PARCELS NOT ACQUIRED AS OF THE DATE OF THESE PLANS ARE NOTED WITHIN THE PLAN SET.

"CONSTRUCTION RECORD DRAWINGS_8-01-2009

STATE OF TEXAS
DENNIS D. SATRE
71590
REGISTERED PROFESSIONAL ENGINEER
12/28/06

NO.	DATE	REVISION	APPROV.

DALLAS PARKWAY EXTENSION

COLLIN COUNTY

PROJECT LAYOUT

Halff Associates, Inc.
ENGINEERS · ARCHITECTS · SCIENTISTS · PLANNERS · SURVEYORS

DRAWN MDB	DATE DEC 2006	DESIGNED DDS	DATE
CHECKED DDS	DATE	SCALE AS NOTED	

BOND PROJECT NO. 03-13 SHEET 3 OF 271

P-200613-01

1:18:04 PM
i:\23000s\23819\frisco\dgn\23819plprp01.dgn
12/27/2006 1:18:04 PM

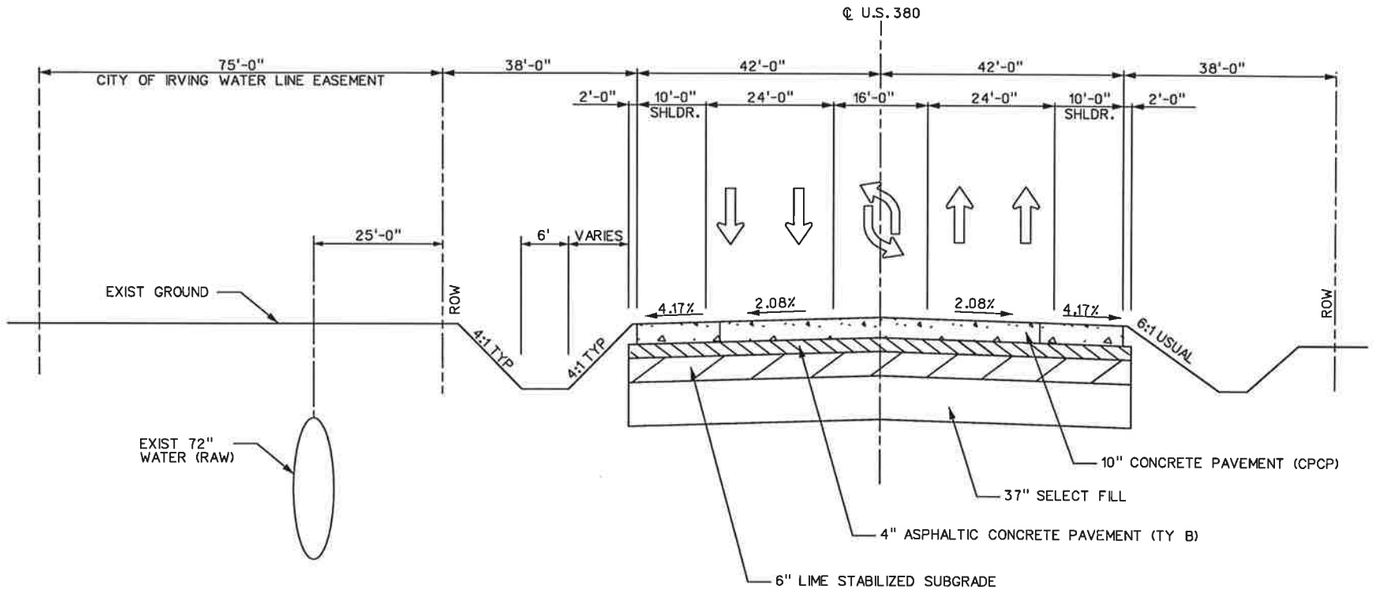

US 380 AT DALLAS NORTH TOLLWAY
LOOKING EAST, NTS

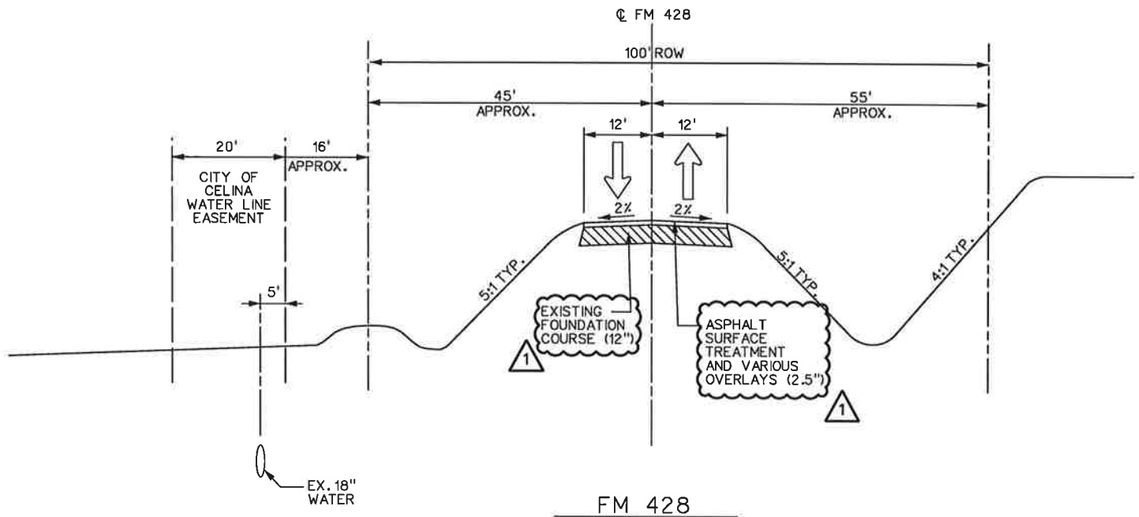

FM 428
LOOKING EAST, NTS

"CONSTRUCTION RECORD DRAWINGS_8-01-2009

STATE OF TEXAS
DENNIS D. SATRE
71590
REGISTERED PROFESSIONAL ENGINEER
3-30-07

NO.	DATE	REVISION	APPROV.
1	3/30/07	TxDOT DRIVEWAY PERMIT - C.O. #1	D. SATRE

DALLAS PARKWAY EXTENSION

COLLIN COUNTY

EXISTING
TYPICAL SECTIONS

Halff Associates, Inc.
ENGINEERS · ARCHITECTS · SCIENTISTS · PLANNERS · SURVEYORS

DRAWN MDB DATE DEC 2006 DESIGNED DDS DATE
CHECKED DDS DATE SCALE NTS

BOND PROJECT NO. 03-13 SHEET 4 OF 271

4:47:23 PM
i:\23000s\23819\FRISCO\DGN\23819TYPRP02.dgn

3/30/2007 4:47:23 PM

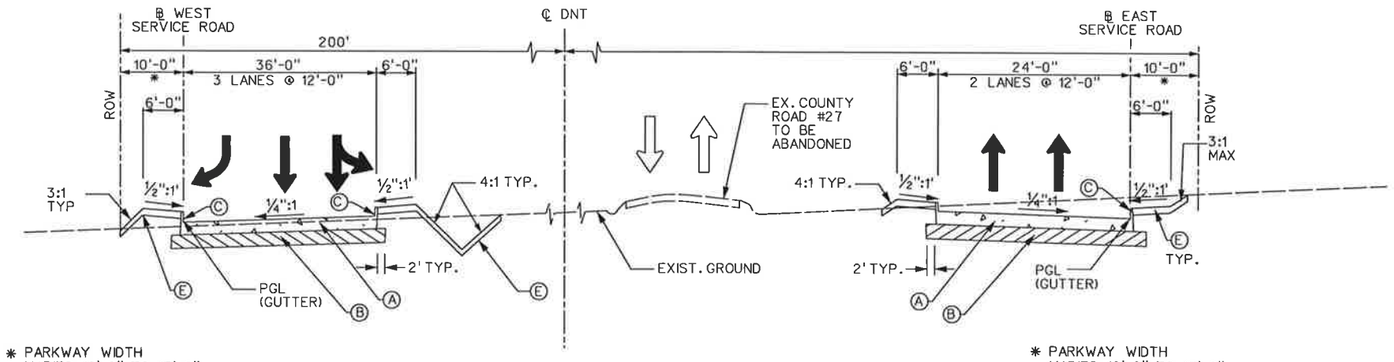

* PARKWAY WIDTH VARIES 10'-0" TO 15'-0" STA 1643+94 TO STA 1645+99

* PARKWAY WIDTH VARIES 10'-0" TO 15'-0" STA 1640+94 TO STA 1644+91

WEST & EAST SERVICE ROADS AT US 380

LEGEND

- (A) 8" REINFORCED CONCRETE PAVEMENT
- (B) 8" LIME TREATED SUBGRADE
- (C) 6" TYPE II CURB
- (D) SSTR
- (E) 4" TOPSOIL AND SEEDING

NOTES:
1. SRB TO BE INSTALLED IN V-DITCH SECTIONS THAT ARE OVER 2' IN DEPTH AND HAVE A CONTINUOUS RUN OF MORE THAN 300'

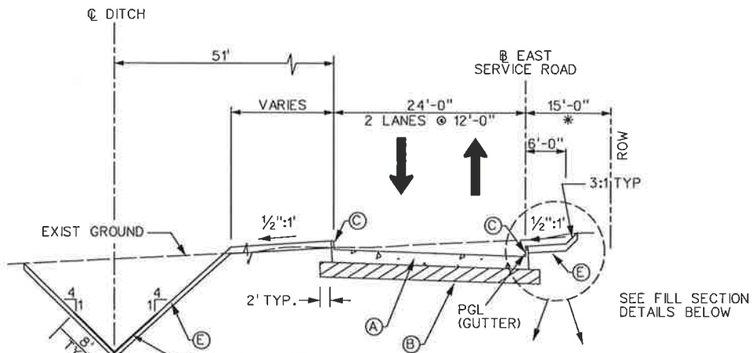

EAST SERVICE ROAD
CUT SECTION

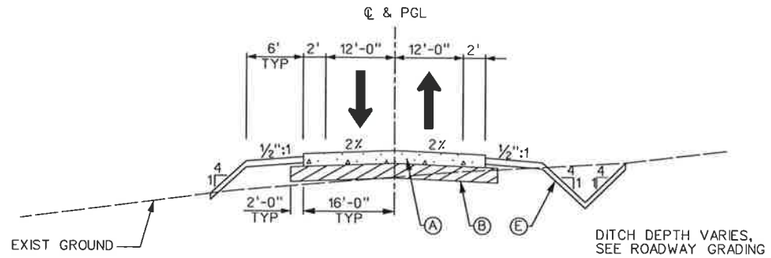

EAST SERVICE ROAD TO WEST SERVICE ROAD CROSSOVER

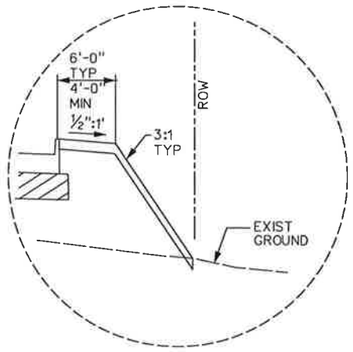

FILL WITHOUT DITCH

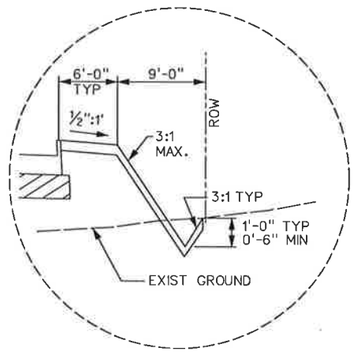

FILL WITH DITCH

"CONSTRUCTION RECORD DRAWINGS_8-01-2009

DENNIS D. SATRE 71590 REGISTERED PROFESSIONAL ENGINEER STATE OF TEXAS
12/28/06

NO.	DATE	REVISION	APPROV.

DALLAS PARKWAY EXTENSION

COLLIN COUNTY

PROPOSED TYPICAL SECTIONS

Halff Associates, Inc.
ENGINEERS · ARCHITECTS · SCIENTISTS · PLANNERS · SURVEYORS

DRAWN MDB	DATE DEC 2006	DESIGNED DDS	DATE
CHECKED DDS	DATE	SCALE NTS	

BOND PROJECT NO. 03-13 SHEET 5 OF 271

R-200612-01

LEGEND

- (A) 8" REINFORCED CONCRETE PAVEMENT
- (B) 8" LIME TREATED SUBGRADE
- (C) 6" TYPE II CURB
- (D) SSTR
- (E) 4" TOPSOIL AND SEEDING

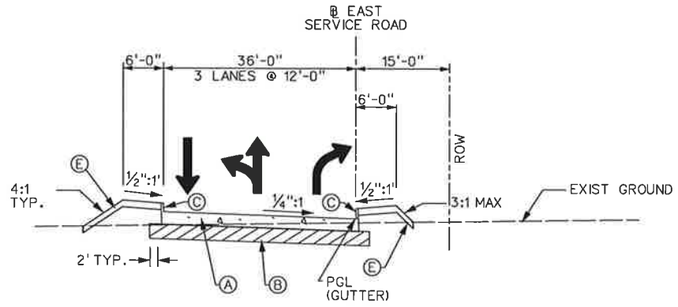

EAST SERVICE ROAD AT
COUNTY ROAD 50, 51, & 428 INTERSECTIONS

(LANE DESIGNATIONS DEPICTED FOR SOUTH SIDE OF INTERSECTION)
TRAFFIC MOVEMENTS VARY, SEE PLAN

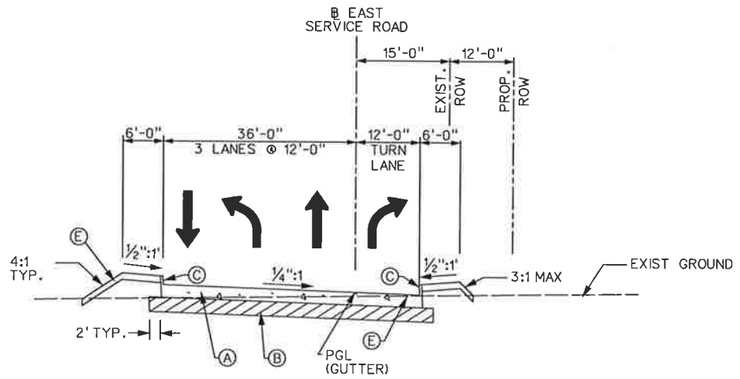

EAST SERVICE ROAD AT COUNTY ROAD 3,4 & 5 INTERSECTIONS

(LANE DESIGNATIONS DEPICTED FOR SOUTH SIDE OF INTERSECTION)

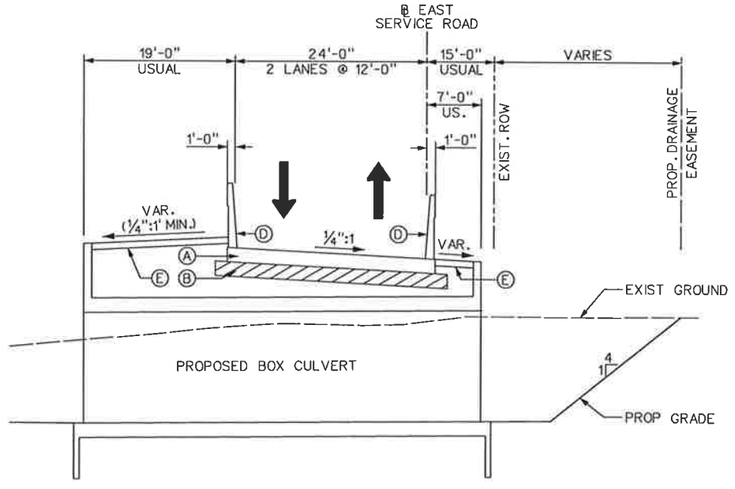

EAST SERVICE ROAD AT CULVERT CROSSINGS

"CONSTRUCTION RECORD DRAWINGS_8-01-2009

STATE OF TEXAS
DENNIS D. SATRE
71590
REGISTERED
PROFESSIONAL ENGINEER
12/28/06

NO.	DATE	REVISION	APPROV.

DALLAS PARKWAY EXTENSION

COLLIN COUNTY

PROPOSED
TYPICAL SECTIONS

Halff Associates, Inc.
ENGINEERS · ARCHITECTS · SCIENTISTS · PLANNERS · SURVEYORS

DRAWN MDB	DATE DEC 2006	DESIGNED DDS	DATE
CHECKED DDS	DATE	SCALE NTS	

BOND PROJECT NO. 03-13 SHEET 6 OF 271

R-200612.01

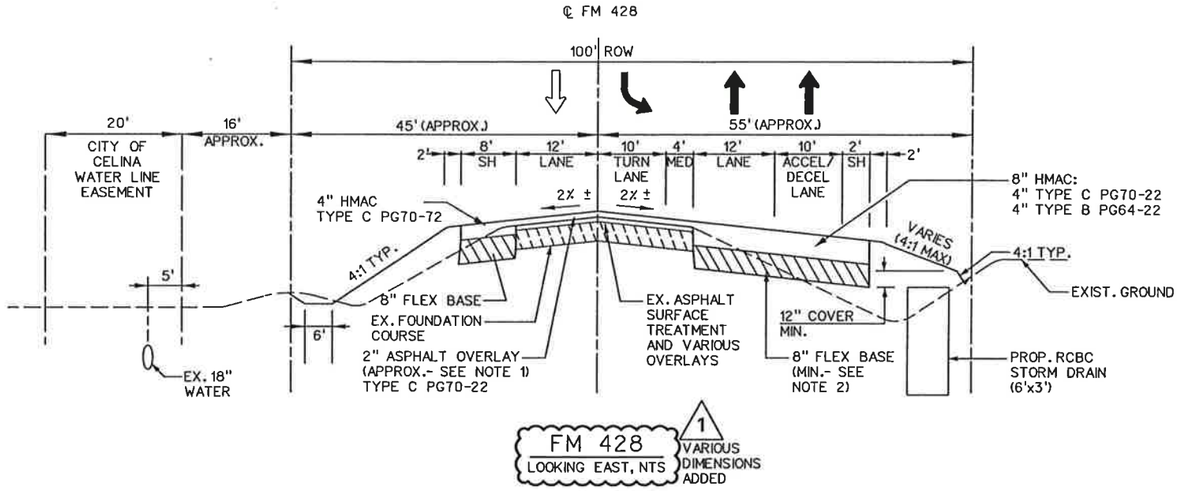

FM 428
LOOKING EAST, NTS

1 VARIOUS DIMENSIONS ADDED

NOTES:

1. EXISTING FM 428 CROSSFALL IS NOT CONSISTENT. CONTRACTOR SHALL PLACE OVERLAY WITH 2" MINIMUM THICKNESS AT CROWN AND ADJUST CROSSFALL AS NECESSARY TO MAINTAIN 2" MINIMUM AT EXISTING PAVEMENT EDGE. ESTIMATED PROJECT QUANTITIES INCLUDE 24% OVERRUN FOR THIS WORK
2. BASE MATERIAL SHALL EXTEND AT LEAST TO BOTTOM OF EXISTING GRANULAR BASE MATERIAL. IF EXISTING BASE IS NOT GRANULAR IN NATURE, USE 8" DEPTH (TYPICAL).
3. FINAL SURFACE COURSE OF TYPE C PG 70-22 SHALL BE SAC-A.

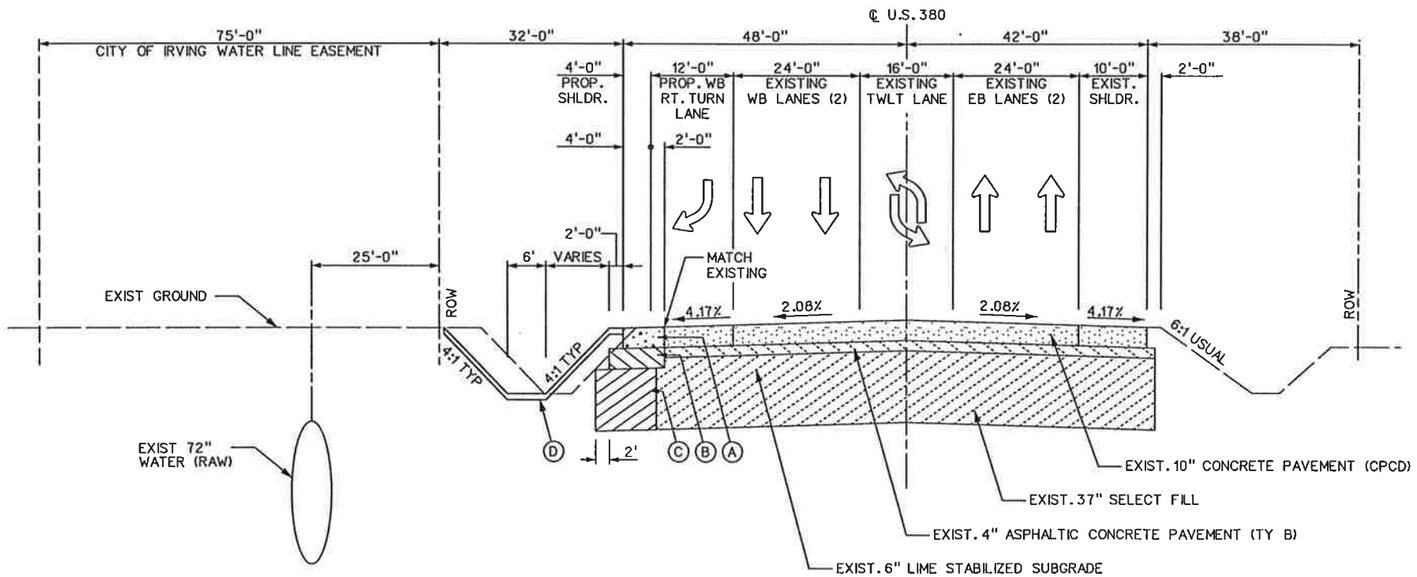

LEGEND

- (A) 10" CONCRETE PAVEMENT (CPCD)
- (B) 10" HMAC (TYPE B, PG 64-22)
- (C) 30" SELECT FILL (P.I.<20)(DC TY C2,CL 3)
- (D) 4" TOPSOIL AND SEEDING

"CONSTRUCTION RECORD DRAWINGS_8-01-2009

US 380 AT DALLAS NORTH TOLLWAY
LOOKING EAST, NTS

STATE OF TEXAS
DENNIS D. SATRE
71590
REGISTERED PROFESSIONAL ENGINEER
3-30-07

NO.	DATE	REVISION	APPROV.
1	3/30/07	TxDOT DRIVEWAY PERMIT - C.O. #1	D. SATRE

DALLAS PARKWAY EXTENSION

COLLIN COUNTY

PROPOSED
TYPICAL SECTIONS

Halff Associates, Inc.
ENGINEERS · ARCHITECTS · SCIENTISTS · PLANNERS · SURVEYORS

DRAWN MDB DATE DEC 2006 | DESIGNED DDS DATE
CHECKED DDS DATE | SCALE

BOND PROJECT NO. 03-13 SHEET 7 OF 271

4:53:57 PM
i:\23000s\23819\FRISCO\DGN\23819TYPRP03.dgn

5/23/2007 4:53:57 PM

P-200612-01

	BID ITEM NO.	TxDOT ITEM NO.	ITEM DESCRIPTION	UNIT	TOTAL	FINAL
	1	104	REMOVING CONC (PAV)	SY	209	
	2	100	PREPARING ROW	STA	326.52	
	3	105	REMOVING STAB BASE AND ASPH PAV(1"-9")	SY	888	
	4	106	OBLITERATING ABANDONED ROAD	STA	43.8	
(**)	5	110	EXCAVATION (ROADWAY)	CY	107295.00	
	6	110	EXCAVATION (CHANNEL)	CY	4000	
(**)	7	132	EMBANKMENT (FINAL) (DENS CONT) (TY C1)	CY	123128	
	8	132	EMBANKMENT (FINAL) (DENS CONT) (TY C2)	CY	547	
	9	160	FURNISHING AND PLACING TOPSOIL (4")	SY	283795	
(*)	10	164	CELL FBR MLCH SEED(PERM)(URBAN)(CLAY)	SY	283795	
(*)	11	164	DRILL SEEDING (TEMP) (WARM)	AC	1.7	
(*)	12	164	DRILL SEEDING (TEMP) (COOL)	AC	1.7	
	13	168	VEGETATIVE WATERING	MG	8800	
	14	169	SOIL RETENTION BLANKETS (CL 2) (TY F)	SY	35911	
	15	216	PROOF ROLLING	HR	50	
	16	247	FL BS (CMP IN PLC)(TY A GR 1)(FNAL POS)	CY	1212	
	17	260	LIME TRT (EXST MATL)(8")	SY	119236	
(*)	18	260	LIME (HYD, COM, OR QK(SLURRY))	TN	2504.1	
(*)	19		NOT USED			
	20	315	FOG SEAL (SS-1)	GA	11923.6	
	21	340	D-GR HMA(METH) TY-C SAC-A PG70-22	TN	2140.3	
	22	340	D-GR HMA(METH) TY-B PG64-22	TN	2936.9	
	23	360	CURB (TYPE II)	LF	61853	
(**)	24	360	CONC PVMT (REINF)(8")	SY	103573	
	25	360	CONC PVMT (JOINTED-CPCD)(10")	SY	383	
(*)	26	402	TRENCH EXCAVATION PROTECTION	LF	11079	
	27	416	DRILL SHAFT (18 IN)	LF	104	
	28	416	DRILL SHAFT (30 IN)	LF	720	
(*)	29	420	CL S CONC (APPR SLAB)	CY	76.9	
	30	420	CL C CONC (ABUT)	CY	52	
(*)	31	420	CL C CONC (BENT)	CY	122.8	
	32	422	REINF CONC SLAB	SF	20490	
	33	425	PRESTR CONC BEAM (TY C)	LF	3188	
	34	428	CONC SURF TREAT (CLASS I)	SY	2075	
	35	432	RIPRAP (CONC)(4 IN)	CY	233	
(*)	36	432	RIPRAP (CONC)(5 IN)	CY	110	
(*)	37	432	RIPRAP (STONE PROTECTION)(15 IN)	CY	1161	
	38	432	RIPRAP (STONE PROTECTION)(12 IN)	CY	175	
	39	432	RIPRAP (STONE COMMON)(DRY)(12 IN)	CY	753	
(*)	40	450	RAIL (TY SSTR) (ROADWAY)	LF	1263	
	41	450	RAIL (TY SSTR) (BRIDGE)	LF	1349	
	42	454	SEALED EXPANSION JOINT (4 IN)(SEJ-A)	LF	105	
	43	460	CMP (GAL STL 18 IN)	LF	250	
	44	460	CMP (GAL STL 24 IN)	LF	100	
(*)	45	460	CMP (GAL STL 30 IN)	LF	83	
	46	462	CONC BOX CULV (4 FT X 2 FT)	LF	250	
	47	462	CONC BOX CULV (4 FT X 3 FT)	LF	591	
	48	462	CONC BOX CULV (5 FT X 2 FT)	LF	203	
(*)	49	462	CONC BOX CULV (6 FT X 3 FT)	LF	1871	
	50	462	CONC BOX CULV (6 FT X 4 FT)	LF	204	
(*)	51	462	CONC BOX CULV (7 FT X 4 FT)	LF	67	
(*)	52	462	CONC BOX CULV (8 FT X 5 FT)	LF	924	
	53	462	CONC BOX CULV (8 FT X 6 FT)	LF	250	
	54	462	CONC BOX CULV (10 FT X 5 FT)	LF	300	
	55	462	CONC BOX CULV (10 FT X 6 FT)	LF	398	
	56	462	CONC BOX CULV (10 FT X 7 FT)	LF	220	
(*)	57	462	CONC BOX CULV (8 FT X 3 FT)	LF	1128	
(*)	57A	462	CONC BOX CULV (7 FT X 3 FT)	LF	94	
(*)	58	464	RC PIPE (CL III)(18 IN)	LF	2324	
(*)	59	464	RC PIPE (CL III)(21 IN)	LF	1967	
(*)	60	464	RC PIPE (CL III)(24 IN)	LF	1823	
(*)	61	464	RC PIPE (CL III)(27 IN)	LF	338	
(*)	62	464	RC PIPE (CL III)(30 IN)	LF	530	
(*)	63	464	RC PIPE (CL III)(36 IN)	LF	374	
(*)	64	464	RC PIPE (CL III)(42 IN)	LF	78	
(*)	65	464	RC PIPE (CL III)(48 IN)	LF	154	
	66	464	RC PIPE (CL IV)(60 IN)	LF	134	
(*)	67	465	INLET (COMPL)(REC)(10')	EA	82	
	68	465	INLET (COMPL)(TY H)	EA	3	
(*)	69	465	INLET (COMPL)(TY H)(MOD)	EA	25	
(*)	70	465	INLET (COMPL)(CGI)(TY SS)	EA	1	
(*)	71	465	INLET EXT (TY SS)	EA	1	
	72	466	WINGWALL (PW)(HW=5 FT)	EA	1	
	73	466	WINGWALL (PW)(HW=6 FT)	EA	3	
	74	466	WINGWALL (PW)(HW=7 FT)	EA	2	
	75	466	WINGWALL (PW)(HW=8 FT)	EA	4	
	76	466	WINGWALL (PW)(HW=8.5 FT)	EA	1	
	77	466	WINGWALL (PW)(HW=9 FT)	EA	3	
	78	466	WINGWALL (PW)(HW=10 FT)	EA	1	
	79	466	WINGWALL (PW)(HW=11 FT)	EA	2	
	80	466	HEADWALL (CH-PW-S)(DIA= 60 IN)	EA	2	
	81	467	SET (TY II)(18 IN)(RCP)(4:1)(C)	EA	24	
(*)	82	467	SET (TY II)(21 IN)(RCP)(4:1)(C)	EA	11	
	83	467	SET (TY II)(24 IN)(RCP)(4:1)(C)	EA	16	
(*)	84	467	SET (TY II)(27 IN)(RCP)(4:1)(C)	EA	3	
(*)	85	467	SET (TY II)(30 IN)(RCP)(4:1)(C)	EA	5	
	86	467	SET (TY II)(36 IN)(RCP)(4:1)(C)	EA	5	
	87	467	SET (TY II)(42 IN)(RCP)(4:1)(C)	EA	1	
(*)	87A	467	SET (TY II)(72 IN)(RCP)(4:1)(C)	EA	2	
(*)	88	467	SET (TY II)(48 IN)(RCP)(4:1)(C)	EA	2	
(*)	89	467	SET (TY I)(S= 4 FT)(HW= 3 FT)(4:1)(C)	EA	2	
(*)	90	467	SET (TY I)(S= 4 FT)(HW= 4 FT)(4:1)(C)	EA	1	
(*)	91	467	SET (TY I)(S= 6 FT)(HW= 4 FT)(4:1)(C)	EA	3	
	92	467	SET (TY I)(S= 6 FT)(HW= 5 FT)(4:1)(C)	EA	3	
	93	467	SET (TY I)(S= 7 FT)(HW= 5 FT)(4:1)(C)	EA	1	
(*)	94	467	SET (TY I)(S= 6 FT)(HW= 5 FT)(4:1)(P)	EA	3	
(*)	95	467	SET (TY I)(S= 8 FT)(HW= 4 FT)(4:1)(P)	EA	5	
(*)	96	467	SET (TY I)(S= 5 FT)(HW= 3 FT)(6:1)(P)	EA	2	
	97	467	SET (TY I)(S=8 FT)(HW=4 FT)(4:1)(C)	EA	1	
(*)	97A	467	SET (TY I)(S= 7 FT)(HW= 3 FT)(6:1)(P)	EA	2	
	98	467	SET (MOD)(TY I)(S= 6 FT)(HW= 5 FT)(FW= 2 FT)(4:1)(C)	EA	2	
	99	467	SET (MOD)(TY I)(S= 8 FT)(HW= 8 FT)(FW = 3 FT)(4:1)(P)	EA	3	

⚠ NOTES:

(*) - ITEM MODIFIED PER BID ADDENDUM No. 1
(**) -ITEM MODIFIED PER BID ADDENDUM No. 2

NO.	DATE	REVISION	APPROV.
1	3/2/07	UPDATED PER BID ADDENDA 1 & 2	DDS

DALLAS PARKWAY EXTENSION

COLLIN COUNTY

ESTIMATE AND QUANTITY

1 OF 2

Halff Associates, Inc.
ENGINEERS · ARCHITECTS · SCIENTISTS · PLANNERS · SURVEYORS

DRAWN MDB DATE DEC 2006 | DESIGNED DDS DATE
CHECKED DDS DATE | SCALE

BOND PROJECT NO. 03-13 SHEET 8 OF 274

P-200612-01

"CONSTRUCTION RECORD DRAWINGS_8-01-2009

4:34:03 PM
I:\23000s\23819\frisco\dgn\23819item01.dgn

	BID ITEM NO.	TxDOT ITEM NO.	ITEM DESCRIPTION	UNIT	TOTAL	FINAL
(*)	100	467	SET (MOD)(TY I)(S= 6 FT)(HW= 5 FT)(FW = 4 FT)(8:1)(P)	EA	1	
(*)	100A	467	SET (MOD)(TY I)(S= 6 FT)(HW= 5 FT)(FW = 4 FT)(6:1)(P)	EA	1	
	101	506	ROCK FILTER DAMS (INSTALL) (TY 2)	LF	1570	
	102	506	ROCK FILTER DAMS (INSTALL) (TY 3)	LF	355	
	103	506	ROCK FILTER DAMS (REMOVE)	LF	1775	
	104	506	CONSTRUCTION EXITS (INSTALL) (TY 1)	SY	1666	
	105	506	TEMP SEDIMENT CONTROL FENCE (REMOVE)	LF	16836	
	106	506	TEMPORARY SEDIMENT CONTROL FENCE	LF	13296	
	107	506	TEMP SDMT CONT FENCE (INLET PROTECT)	LF	3720	
(*)	107A	506	EARTHWORK (ERSN & SEDM CONT, IN VEH)	CY	100	
	108	508	CONSTRUCTING DETOURS	SY	5577	
	109	530	DRIVEWAY APPROACH	EA	10	
	110	540	MTL W-BEAM GD FEN (STEEL POST)	LF	3335	
	111	540	TERMINAL ANCHOR SECTION	EA	3	
	112	540	MTL BEAM GD FEN TRANS (THRIE-BEAM)	EA	25	
	113	544	GUARDRAIL END TREATMENT (INSTALL)	EA	26	
(*)	114	552	WIRE FENCE (TY C)	LF	1489	
	115	552	WIRE FENCE (TY D)(SPECIAL)	LF	3962	
	116	552	GATE (TY 1)	EA	8	
	117	658	INSTL OM ASSM (OM-2SRA) (WC) GND	EA	3	
	118	658	INSTL DEL ASSM (D-SW)SZ 1(RCR)GF3	EA	4	
	119	658	INSTL DEL ASSM (D-SW)SZ 1(RCR)GF3(BI)	EA	43	
	120	658	INSTL DEL ASSM (D-SW)SZ (TYC)CTB	EA	3	
	121	658	INSTL DEL ASSM (D-SW)SZ (TYC)CTB(BI)	EA	16	
	122	658	INSTL DEL ASSM (D-SY)SZ 1(RCR)GF3	EA	5	
	123	658	INSTL DEL ASSM (D-SY)SZ (TYC)CTB	EA	3	
	124	662	WK ZN PAV MRK REMOV (Y) 4" (SLD)	LF	14230	
	125	662	WK ZN PAV MRK NON-REMOV (Y) 4" (SLD)	LF	2043	

	BID ITEM NO.	TxDOT ITEM NO.	ITEM DESCRIPTION	UNIT	TOTAL	FINAL
	126	662	WK ZN PAV MRK REMOV (W) 4" (SLD)	LF	11402	
	127	662	WK ZN PAV MRK NON-REMOV (W) 4" (SLD)	LF	2148	
	128	666	REFL PAV MRK TY I(W) 4" (SLD)(100MIL)	LF	790	
	129	666	REFL PAV MRK TY I(W) 8" (SLD)(100MIL)	LF	535	
	130	666	REF PAV MRK TY II(W) 4" (BRK)	LF	719	
	131	666	REF PAV MRK TY II(W) 4" (SLD)	LF	3779	
	132	666	REF PAV MRK TY II(W) 8" (SLD)	LF	4384	
	133	666	REF PAV MRK TY II(W) 24" (SLD)	LF	1348	
	134	666	REF PAV MRK TY II(Y) 4" (SLD)	LF	65753	
	135	666	REF PAV MRK TY II(Y) 8" (SLD)	LF	822	
	136	666	REF PAV MRK TY II(Y) 24" (SLD)	LF	635	
	137	666	REFL PAV MRK TY I(W) (ARROW) (100MIL)	EA	9	
	138	666	REFL PAV MRK TY I(W) (WORD) (100MIL)	EA	9	
	139	672	REFL PAV MRKR TY I-C	EA	644	
	140	672	REFL PAV MRKR TY II-A-A	EA	1361	
	141	677	ELIM EXT PAV MRK & MRKS (4")	LF	880	
	142	678	PAV SURF PREP FOR MRK (4")	LF	790	
	143	678	PAV SURF PREP FOR MRK (8")	LF	535	
	144	678	PAV SURF PREP FOR MRK (ARROW)	EA	9	
	145	678	PAV SURF PREP FOR MRK (WORD)	EA	9	
	146	644	INS SM RD SN SUP&AM TY 10BWG(1) SA(T)	EA	19	
	147	644	INS SM RD SN SUP&AM TY S80(1)SA(T-2EXT)	EA	2	
	148	644	INS SM RD SN SUP&AM TY TWT(1) UA(P)	EA	62	
(*)	149	500	MOBILIZATION	EA	1	
(*)	150	502	BARRICADES, SIGNS AND TRAFFIC HANDLING	MO	16	

⚠ NOTES:

(*) - ITEM MODIFIED PER BID ADDENDUM No. 1
(**) -ITEM MODIFIED PER BID ADDENDUM No. 2

NO.	DATE	REVISION	APPROV.
1	3/2/07	UPDATED PER BID ADDENDA 1 & 2	DDS

DALLAS PARKWAY EXTENSION

COLLIN COUNTY, TX

ESTIMATE AND QUANTITY

2 OF 2

Halff Associates, Inc.
ENGINEERS · ARCHITECTS · SCIENTISTS · PLANNERS · SURVEYORS

DRAWN MDB DATE DEC 2006 DESIGNED DDS DATE
CHECKED DDS DATE SCALE

BOND PROJECT NO. 03-13 SHEET 9 OF 271

"CONSTRUCTION RECORD DRAWINGS_8-01-2009

		ROADWAY																	
BID ITEM NO.		6	8	16	18 (•)	17	20	22	21	24	25	23	29 (•)	40 (•)	110	111	112	113	114 (•)	115
TxDOT ITEM NO.		110	132	247	260	260	315	340	340	360	360	360	420	450	540	540	540	544	552	552
SHEET	STATION	EXCAVATION (CHANNEL)	EMBANKMENT (FINAL) (DENS CONT) (TY C2)	FL BS (CMP IN PLC)(TY A GR 1)(FNAL POS)	LIME (HYD, COM, OR QK(SLURRY))	LIME TRT (EXST MATL)(8")	FOG SEAL (SS-1)	D-GR HMA(METH) TY-B PG64-22	D-GR HMA(METH) TY-C SAC-A PG70-22	CONC PVMT (REINF)(8")	CONC PVMT (JOINTED-CPCD)(10")	CURB (TYPE II)	CL S CONC (APPR SLAB)	RAIL (TY SSTR) (ROADWAY)	MTL W-BEAM GD FEN (STEEL POST)	TERMINAL ANCHOR SECTION	MTL BEAM GD FEN TRANS (THRIE-BEAM)	GUARDRAIL END TREATMENT (INSTALL)	WIRE FENCE (TY C)	WIRE FENCE (TY D)(SPECIAL)
		CY	CY	CY	TN	SY	GA	TN	TN	SY	SY	LF	CY	LF	LF	EA	EA	EA	LF	LF
	EAST SERVICE RD. (ESR)																			
1	1638+38 TO 1650+00				78.0	3714	371.4			3205		1968		190	189		2	2		
2	1650+00 TO 1660+00				78.2	3725	372.5			3319		1710								
3	1660+00 TO 1670+00				87.2	4151	415.1			3674		1950								
4	1670+00 TO 1680+00				67.7	3225	322.5			2776		1747		190	425		4	2		
5	1680+00 TO 1690+00				78.7	3746	374.6			3293		1937			59			2		
6	1690+00 TO 1700+00				91.1	4338	433.8	103.8		3875		1942								
7	1700+00 TO 1710+00				67.5	3217	321.7			2762		1907								
8	1710+00 TO 1720+00	4000			67.8	3229	322.9			2778		1748		190	512		4	4		
9	1720+00 TO 1730+00				67.6	3219	321.9			2768		2028								
10	1730+00 TO 1740+00				67.7	3221	322.1			2770		1989								
11	1740+00 TO 1750+00				108.8	5179	517.9	143.1		4721		1759		218	493	1	4	3		
12	1750+00 TO 1760+00				67.6	3218	321.8			2767		1927								
13	1760+00 TO 1770+00				67.4	3211	321.1			2765		1922								
14	1770+00 TO 1780+00				67.5	3214	321.4			2759		1879								
15	1780+00 TO 1790+00				67.6	3219	321.9			2767		1938								
16	1790+00 TO 1800+00				101.9	4854	485.4	96.2		4395		1972			479	2		2		
17	1800+00 TO 1810+00				68.0	3240	324.0			2782		2134		190	429		4	4		
18	1810+00 TO 1820+00				67.8	3228	322.8			2771		2008								
19	1820+00 TO 1830+00				78.7	3749	374.9	51.1		3160		2159								
20	1830+00 TO 1840+00				93.2	4437	443.7	191.4		3483		1910								
21	1840+00 TO 1850+00				67.6	3219	321.9			2764		1908								
22	1850+00 TO 1860+00				67.3	3203	320.3			2770		1925	10.3		202		1	2	643	
23	1860+00 TO 1870+00				21.3	1015	101.5			881		654	66.6				1		229	
24	1870+00 TO 1880+00				67.6	3217	321.7			2766		1937								
25	1880+00 TO 1890+00				67.6	3220	322.0			2768		1939								
26	1890+00 TO 1900+00				67.5	3215	321.5			2761		1906								
27	1900+00 TO 1910+00				91.3	4346	434.6			3877		1958								
28	1910+00 TO 1920+00				67.5	3214	321.4			2761		1904								
29	1920+00 TO 1930+00				67.8	3230	323.0			2768		1911								504
30	1930+00 TO 1940+00				67.7	3224	322.4			2765		1909			250			2	617	999
31	1940+00 TO 1950+00				67.8	3227	322.7			2773		1717		190	244		4	2		1010
32	1950+00 TO 1960+00				70.8	3369	336.9			2918		1936								1001
33	1960+00 TO 1964+90				46.8	2229	222.9			2009		874								448
	WEST SERVICE RD. (WSR)																			
34	1641+42 TO 1648+00				60.9	2899	289.9			2660		841		95	53		1	1		
	TEMP CROSSOVER																			
35	1645+46 TO 1656+60				64.6	3075	307.5			2742										
	US 380 DECEL LANE																			
36	1180+28 TO 1186+87		547					285.7			383									
	FM 428																			
37	0+00 TO 15+00			640				1012.5	1066.3											
38	15+00 TO 26+00			572				1053.1	1074.0											
	TOTAL	4000	547	1212	2504.1	119236	11923.6	2936.9	2140.3	103573	383	61853	76.9	1263	3335	3	25	26	1489	3962

⚠ NOTES:

(•) - ITEM MODIFIED PER BID ADDENDUM No. 1
(••) - ITEM MODIFIED PER BID ADDENDUM No. 2

NO.	DATE	REVISION	APPROV.
1	3/2/07	UPDATED PER BID ADDENDA 1 & 2	DDS

DALLAS PARKWAY EXTENSION

COLLIN COUNTY

ITEM SUMMARY
ROADWAY

Halff Associates, Inc.
ENGINEERS · ARCHITECTS · SCIENTISTS · PLANNERS · SURVEYORS

DRAWN MDB DATE DEC 2006 | DESIGNED DDS DATE
CHECKED DDS DATE | SCALE

BOND PROJECT NO. 03-13 SHEET 40 of 271

1-200612-01

"CONSTRUCTION RECORD DRAWINGS_8-01-2009

		CULVERT STRUCTURES													INLETS				
BID ITEM NO.		46	47	48	49 (*)	50	51 (*)	52 (*)	53	54	55	56	57 (*)	57A (*)	68	67 (*)	69 (*)	70	71
TxDOT ITEM NO.		462	462	462	462	462	462	462	462	462	462	462	462	462	465	465	465	465	465
SHEET	STATION	CONC BOX CULV (4 FT X 2 FT)	CONC BOX CULV (4 FT X 3 FT)	CONC BOX CULV (5 FT X 2 FT)	CONC BOX CULV (6 FT X 3 FT)	CONC BOX CULV (6 FT X 4 FT)	CONC BOX CULV (7 FT X 4 FT)	CONC BOX CULV (8 FT X 5 FT)	CONC BOX CULV (8 FT X 6 FT)	CONC BOX CULV (10 FT X 5 FT)	CONC BOX CULV (10 FT X 6 FT)	CONC BOX CULV (10 FT X 7 FT)	CONC BOX CULV 8 FT X 3 FT)	CONC BOX CULV (7 FT X 3 FT)	INLET (COMPL)(TY H)	INLET (COMPL)(REC)(10')	INLET (COMPL)(TY H)(MOD)	INLET (COMPL)(CG)(TY SS)	INLET EXT (TY SS)
		LF	LF	LF	LF	LF	LF	LF	LF	LF	LF	LF	LF	LF	EA	EA	EA	EA	EA
	EAST SERVICE RD. (ESR)																		
1	1638+38 TO 1650+00			203									200			2	1		
2	1650+00 TO 1660+00	37	524		73											3	1		
3	1660+00 TO 1670+00	83			140											4	2		
4	1670+00 TO 1680+00								250							2	1		
5	1680+00 TO 1690+00															2	1		
6	1690+00 TO 1700+00					140									1	3			
7	1700+00 TO 1710+00	58														3	1		
8	1710+00 TO 1720+00				70					300						2	2		
9	1720+00 TO 1730+00															2			
10	1730+00 TO 1740+00															2			
11	1740+00 TO 1750+00							924								2		1	1
12	1750+00 TO 1760+00															2	1		
13	1760+00 TO 1770+00															3			
14	1770+00 TO 1780+00															2	3		
15	1780+00 TO 1790+00					64										2	1		
16	1790+00 TO 1800+00										398					3	1		
17	1800+00 TO 1810+00											220				3			
18	1810+00 TO 1820+00															1			
19	1820+00 TO 1830+00															3			
20	1830+00 TO 1840+00															3			
21	1840+00 TO 1850+00															2			
22	1850+00 TO 1860+00																		
23	1860+00 TO 1870+00															2	1		
24	1870+00 TO 1880+00														2	2	3		
25	1880+00 TO 1890+00						67									3	1		
26	1890+00 TO 1900+00															3			
27	1900+00 TO 1910+00				88								190			3	2		
28	1910+00 TO 1920+00	72														3	1		
29	1920+00 TO 1930+00		67													3			
30	1930+00 TO 1940+00															3			
31	1940+00 TO 1950+00												200			2	1		
32	1950+00 TO 1960+00															3			
33	1960+00 TO 1964+90															2	1		
																3			
	WEST SERVICE RD. (WSR)																		
34	1641+42 TO 1648+00												538	94		1			
	TEMP CROSSOVER																		
35	1645+46 TO 1656+60																		
	US 380 DECEL LANE																		
36	1180+28 TO 1186+87																		
	FM 428																		
37	0+00 TO 15+00				715														
38	15+00 TO 26+00				785														
	TOTAL	250	591	203	1871	204	67	924	250	300	398	220	1128	94	3	82	25	1	1

⚠ NOTES:

(*) - ITEM MODIFIED PER BID ADDENDUM No. 1
(**) -ITEM MODIFIED PER BID ADDENDUM No. 2

"CONSTRUCTION RECORD DRAWINGS_8-01-2009

NO.	DATE	REVISION	APPROV.
1	3/2/07	UPDATED PER BID ADDENDA 1 & 2	DDS

DALLAS PARKWAY EXTENSION

COLLIN COUNTY

ITEM SUMMARY
CULVERT STRUCTURES & INLETS

Halff Associates, Inc.
ENGINEERS · ARCHITECTS · SCIENTISTS · PLANNERS · SURVEYORS

DRAWN MDB DATE DEC 2006 | DESIGNED DDS DATE
CHECKED DDS DATE | SCALE

BOND PROJECT NO. 03-13 SHEET 41 OF 271

P-200612-01

4:34:06 PM
i:\23000s\23819\frisco\dgn\23819item03.dgn

		STORM SEWER												
BID ITEM NO.		26	43	44	45 (*)	58 (*)	59 (*)	60 (*)	61 (*)	62 (*)	63 (*)	64 (*)	65 (*)	66
TxDOT ITEM NO.		402	460	460	460	464	464	464	464	464	464	464	464	464
SHEET	STATION	TRENCH EXCAVATION PROTECTION	CMP (GAL STL 18 IN)	CMP (GAL STL 24 IN)	CMP (GAL STL 30 IN)	RC PIPE (CL III)(18 IN)	RC PIPE (CL III)(21 IN)	RC PIPE (CL III)(24 IN)	RC PIPE (CL III)(27 IN)	RC PIPE (CL III)(30 IN)	RC PIPE (CL III)(36 IN)	RC PIPE (CL III)(42 IN)	RC PIPE (CL III)(48 IN)	RC PIPE (CL IV)(60 IN)
		LF	LF	LF	LF	LF	LF	LF	LF	LF	LF	LF	LF	LF
	EAST SERVICE RD. (ESR)													
1	1638+38 TO 1650+00	307					103		28	53				
2	1650+00 TO 1660+00	1016				73	296	13						
3	1660+00 TO 1670+00	503				158	44				77			
4	1670+00 TO 1680+00	209				79			80					
5	1680+00 TO 1690+00	202				79	41			82				
6	1690+00 TO 1700+00	467					48	196		153				
7	1700+00 TO 1710+00	310				55	197							
8	1710+00 TO 1720+00	444				111	10	203						
9	1720+00 TO 1730+00	156				79	77							
10	1730+00 TO 1740+00	80				80								
11	1740+00 TO 1750+00	618				157	119						83	
12	1750+00 TO 1760+00	205	101			123		82						
13	1760+00 TO 1770+00	138				61		77						
14	1770+00 TO 1780+00	301		100		9	13	152				78	71	
15	1780+00 TO 1790+00	173					34			75				
16	1790+00 TO 1800+00	267					84		80					
17	1800+00 TO 1810+00	460					242	7		66	90			
18	1810+00 TO 1820+00	236				236								
19	1820+00 TO 1830+00	79				79								
20	1830+00 TO 1840+00	236			83	79	81	76						
21	1840+00 TO 1850+00	231					82	149						
22	1850+00 TO 1860+00	203				203								
23	1860+00 TO 1870+00	177				43								134
24	1870+00 TO 1880+00	184					101	83						
25	1880+00 TO 1890+00	252					33			73	79			
26	1890+00 TO 1900+00	264				79	106				80			
27	1900+00 TO 1910+00	235				158	77							
28	1910+00 TO 1920+00	273				107		17		28	48			
29	1920+00 TO 1930+00	297				230								
30	1930+00 TO 1940+00	237					77	160						
31	1940+00 TO 1950+00	287					77	160						
32	1950+00 TO 1960+00	156				5		76	75					
33	1960+00 TO 1964+90	413				41		372	75					
	WEST SERVICE RD. (WSR)													
34	1641+42 TO 1648+00	253					25							
	TEMP CROSSOVER													
35	1645+46 TO 1656+60													
	US 380 DECEL LANE													
36	1180+28 TO 1186+87													
	FM 428													
37	0+00 TO 15+00	425												
38	15+00 TO 26+00	785												
	TOTAL	11079	101	100	83	2324	1967	1823	338	530	374	78	154	134

⚠ NOTES:

(*) - ITEM MODIFIED PER BID ADDENDUM No. 1
(**) -ITEM MODIFIED PER BID ADDENDUM No. 2

NO.	DATE	REVISION	APPROV.
1	3/2/07	UPDATED PER BID ADDENDA 1 & 2	DDS

DALLAS PARKWAY EXTENSION

COLLIN COUNTY

ITEM SUMMARY
STORM SEWER

Halff Associates, Inc.
ENGINEERS · ARCHITECTS · SCIENTISTS · PLANNERS · SURVEYORS

DRAWN MDB DATE DEC 2006 | DESIGNED DDS DATE
CHECKED DDS DATE | SCALE

BOND PROJECT NO. 03-13 SHEET 12 OF 171

"CONSTRUCTION RECORD DRAWINGS_8-01-2009

4:34:07 PM
i:\23000s\23819\frisco\dgn\23819item04.dgn

		HEADWALLS & WINGWALLS														
BID ITEM NO.		35	36 (*)	38	37 (*)	39	72	73	74	75	76	77	78	79	80	
TxDOT ITEM NO.		432	432	432	432	432	466	466	466	466	466	466	466	466	466	
SHEET	STATION	RIPRAP (CONC)(4 IN)	RIPRAP (CONC)(5 IN)	RIPRAP (STONE PROTECTION)(12 IN)	RIPRAP (STONE PROTECTION)(15 IN)	RIPRAP (STONE COMMON)(DRY)(12 IN)	WINGWALL (PW)(HW=5 FT)	WINGWALL (PW)(HW=6 FT)	WINGWALL (PW)(HW=7 FT)	WINGWALL (PW)(HW=8 FT)	WINGWALL (PW)(HW=8.5 FT)	WINGWALL (PW)(HW=9 FT)	WINGWALL (PW)(HW=10 FT)	WINGWALL (PW)(HW=11 FT)	HEADWALL (CH-PW-S)(DIA= 60 IN)	
		CY	CY	CY	CY	CY	EA	EA	EA	EA	EA	EA	EA	EA	EA	
	EAST SERVICE RD. (ESR)															
1	1638+38 TO 1650+00	35		19	70	23		1	1							
2	1650+00 TO 1660+00															
3	1660+00 TO 1670+00	4		12		30	1									
4	1670+00 TO 1680+00	21			114	23						1	1			
5	1680+00 TO 1690+00					22										
6	1690+00 TO 1700+00			28												
7	1700+00 TO 1710+00					7										
8	1710+00 TO 1720+00	25			142	21					1	1				
9	1720+00 TO 1730+00					28										
10	1730+00 TO 1740+00					9										
11	1740+00 TO 1750+00	31		30	150	29				2		1				
12	1750+00 TO 1760+00					30										
13	1760+00 TO 1770+00					13										
14	1770+00 TO 1780+00					55										
15	1780+00 TO 1790+00					29										
16	1790+00 TO 1800+00	14			73	14				2						
17	1800+00 TO 1810+00	23			135	37								2		
18	1810+00 TO 1820+00					28										
19	1820+00 TO 1830+00					9										
20	1830+00 TO 1840+00					30										
21	1840+00 TO 1850+00					32										
22	1850+00 TO 1860+00															
23	1860+00 TO 1870+00		110	29	234	14									2	
24	1870+00 TO 1880+00					14										
25	1880+00 TO 1890+00					42										
26	1890+00 TO 1900+00					33										
27	1900+00 TO 1910+00			40		31										
28	1910+00 TO 1920+00					35										
29	1920+00 TO 1930+00					30										
30	1930+00 TO 1940+00					32										
31	1940+00 TO 1950+00	14			55	31		2								
32	1950+00 TO 1960+00					22										
33	1960+00 TO 1964+90															
	WEST SERVICE RD. (WSR)															
34	1641+42 TO 1648+00	66		17	159				1							
	TEMP CROSSOVER															
35	1645+46 TO 1656+60															
	US 380 DECEL LANE															
36	1180+28 TO 1186+87															
	FM 428															
37	0+00 TO 15+00				19											
38	15+00 TO 26+00				10											
	TOTAL	233	110	175	1161	753	1	3	2	4	1	3	1	2	2	

⚠ NOTES:

(*) - ITEM MODIFIED PER BID ADDENDUM No. 1
(**) - ITEM MODIFIED PER BID ADDENDUM No. 2

"CONSTRUCTION RECORD DRAWINGS_8-01-2009

NO.	DATE	REVISION	APPROV.
1	3/2/07	UPDATED PER BID ADDENDA 1 & 2	DDS

DALLAS PARKWAY EXTENSION

COLLIN COUNTY

ITEM SUMMARY
HEADWALLS & WINGWALLS

Halff Associates, Inc.
ENGINEERS · ARCHITECTS · SCIENTISTS · PLANNERS · SURVEYORS

DRAWN MDB DATE DEC 2006 | DESIGNED DDS DATE
CHECKED DDS DATE | SCALE

BOND PROJECT NO. 03-13 SHEET 13 OF 271

P-200612-01

4:34:07 PM
i:\23000s\23819\frisco\dgn\23819item05.dgn

		SAFETY END TREATMENT																						
BID ITEM NO.		89 (*)	90 (*)	96	97	97A (*)	91 (*)	92	93	94	81	82 (*)	83	85 (*)	86	87	87A (*)	88 (*)	95 (*)	98	99	100	100A(*)	84 (*)
TxDOT ITEM NO.		467	467	467	467	467	467	467	467	467	467	467	467	467	467	467	467	467	467	467	467	467	467	467
SHEET	STATION	SET (TY ID(S= 4 FT)(HW= 3 FT)(4:1)(C)	SET (TY ID(S= 4 FT)(HW= 4 FT)(4:1)(C)	SET (TY ID(S= 5 FT)(HW= 3 FT)(6:1)(P)	SET (TY ID(S=8 FT)(HW=4 FT)(4:1)(C)	SET (TY ID(S= 7 FT)(HW= 3 FT)(6:1)(P)	SET (TY ID(S= 6 FT)(HW= 4 FT)(4:1)(C)	SET (TY ID(S= 6 FT)(HW= 5 FT)(4:1)(C)	SET (TY ID(S= 7 FT)(HW= 5 FT(4:1)(C)	SET (TY ID(S= 6 FT)(HW= 5 FT(4:1)(P)	SET (TY ID(18 IN)(RCP)(4:1)(C)	SET (TY ID(21 IN)(RCP)(4:1)(C)	SET (TY ID(24 IN)(RCP)(4:1)(C)	SET (TY ID(30 IN)(RCP)(4:1)(C)	SET (TY ID(36 IN)(RCP)(4:1)(C)	SET (TY ID(42 IN)(RCP)(4:1)(C)	SET (TY ID(72 IN)(RCP)(4:1)(C)	SET (TY ID(48 IN)(RCP)(4:1)(C)	SET (TY ID(S= 8 FT)(HW= 4 FT)(4:1)(P)	SET (MOD)(TY ID(S= 6 FT)(HW= 5 FT)(FW= 2 FT)(4:1)(C)	SET (MOD)(TY ID(S= 8 FT)(HW= 8 FT)(FW = 3 FT)(4:1)(P)	SET (MOD)(TY ID(S= 6 FT)(HW= 5 FT)(FW = 4 FT)(8:1)(P)	SET (MOD)(TY ID(S= 6 FT)(HW= 5 FT)(FW = 4 FT)(6:1)(P)	SET (TY ID(27 IN)(RCP)(4:1)(C)
		EA	EA	EA	EA	EA	EA	EA	EA	EA	EA	EA	EA	EA	EA	EA	EA	EA	EA	EA	EA	EA	EA	EA
	EAST SERVICE RD. (ESR)																							
1	1638+38 TO 1650+00			2								1		1										
2	1650+00 TO 1660+00																							
3	1660+00 TO 1670+00										2				1									
4	1670+00 TO 1680+00										1													
5	1680+00 TO 1690+00										1			1			2							1
6	1690+00 TO 1700+00							2												2				
7	1700+00 TO 1710+00	1																						
8	1710+00 TO 1720+00						1						1											
9	1720+00 TO 1730+00										1	1												
10	1730+00 TO 1740+00										1													
11	1740+00 TO 1750+00										2	1						1						
12	1750+00 TO 1760+00										2		1								3			
13	1760+00 TO 1770+00										1		3											
14	1770+00 TO 1780+00												2			1		1						
15	1780+00 TO 1790+00							1						1										
16	1790+00 TO 1800+00																							1
17	1800+00 TO 1810+00											1		1	1									
18	1810+00 TO 1820+00										3													
19	1820+00 TO 1830+00										1													
20	1830+00 TO 1840+00										1	1	1											
21	1840+00 TO 1850+00											1	2											
22	1850+00 TO 1860+00										1													
23	1860+00 TO 1870+00										1	1												
24	1870+00 TO 1880+00												1											
25	1880+00 TO 1890+00								1					1	1									
26	1890+00 TO 1900+00										1	1			1									
27	1900+00 TO 1910+00				1		2				2	1							1					
28	1910+00 TO 1920+00	1									1				1									
29	1920+00 TO 1930+00		1								2													
30	1930+00 TO 1940+00											1	2											
31	1940+00 TO 1950+00											1	2											
32	1950+00 TO 1960+00												1											1
33	1960+00 TO 1964+90																							
	WEST SERVICE RD. (WSR)																							
34	1641+42 TO 1648+00					2													4					
	TEMP CROSSOVER																							
35	1645+46 TO 1656+60																							
	US 380 DECEL LANE																							
36	1180+28 TO 1186+87																							
	FM 428																							
37	0+00 TO 15+00									3													1	
38	15+00 TO 26+00																					1		
	TOTAL	2	1	2	1	2	3	3	1	3	24	11	16	5	5	1	2	2	5	2	3	1	1	3

NOTES:

(*) - ITEM MODIFIED PER BID ADDENDUM No. 1
(**) -ITEM MODIFIED PER BID ADDENDUM No. 2

"CONSTRUCTION RECORD DRAWINGS_8-01-2009

NO.	DATE	REVISION	APPROV.
1	3/2/07	UPDATED PER BID ADDENDA 1 & 2	DDS

DALLAS PARKWAY EXTENSION

COLLIN COUNTY

ITEM SUMMARY
SAFETY END TREATMENT

Halff Associates, Inc.
ENGINEERS · ARCHITECTS · SCIENTISTS · PLANNERS · SURVEYORS

DRAWN MDB DATE DEC 2006 | DESIGNED DDS DATE
CHECKED DDS DATE | SCALE

BOND PROJECT NO. 03-13 SHEET 16 OF 271

I-200612-01

4:34:08 PM
i:\23000s\23819\frisco\dgn\23819item06.dgn

		PAVEMENT MARKINGS & MARKERS																	
BID ITEM NO.		128	129	130	131	132	133	137	138	134	135	136	139	140	141	142	143	144	145
TxDOT ITEM NO.		666	666	666	666	666	666	666	666	666	666	666	672	672	677	678	678	678	678
SHEET	STATION	REFL PAV MRK TY (W) 4" (SLD)(100MIL)	REFL PAV MRK TY (W) 8" (SLD)(100MIL)	REF PAV MRK TY (W) 4" (BRK)	REF PAV MRK TY (W) 4" (SLD)	REF PAV MRK TY (W) 8" (SLD)	REF PAV MRK TY (W) 24" (SLD)	REFL PAV MRK TY (W) (ARROW) (100MIL)	REFL PAV MRK TY (W) (WORD) (100MIL)	REF PAV MRK TY (Y) 4" (SLD)	REF PAV MRK TY (Y) 8" (SLD)	REF PAV MRK TY (Y) 24" (SLD)	REFL PAV MRKR TY I-C	REFL PAV MRKR TY II-A-A	ELIM EXT PAV MRK & MRKS (4")	PAV SURF PREP FOR MRK (4")	PAV SURF PREP FOR MRK (8")	PAV SURF PREP FOR MRK (ARROW)	PAV SURF PREP FOR MRK (WORD)
		LF	LF	LF	LF	LF	LF	EA	EA	LF	LF	LF	EA	EA	LF	LF	LF	EA	EA
	EAST SERVICE RD. (ESR)																		
1	1638+38 TO 1650+00			719						400		113	26	20					
2	1650+00 TO 1660+00				201	200	91			1845		170	30	38					
3	1660+00 TO 1670+00				290	10	116			2047		96	15	43					
4	1670+00 TO 1680+00									1999			25						
5	1680+00 TO 1690+00				200	100	84			2000			25	20					
6	1690+00 TO 1700+00				246	357	106	3	3	2150		23	61	73				3	3
7	1700+00 TO 1710+00									2000				25					
8	1710+00 TO 1720+00									2000				25					
9	1720+00 TO 1730+00									2001				25					
10	1730+00 TO 1740+00									1999				25					
11	1740+00 TO 1750+00				588	667	202	3	3				94	96				3	3
12	1750+00 TO 1760+00									2000				25					
13	1760+00 TO 1770+00									2000				25					
14	1770+00 TO 1780+00									1999				25					
15	1780+00 TO 1790+00									2000				25					
16	1790+00 TO 1800+00				446	435	192	3	3	2147		23	69	58				3	3
17	1800+00 TO 1810+00									2006				25					
18	1810+00 TO 1820+00									2006				25					
19	1820+00 TO 1830+00				198		94			2002			10	30					
20	1830+00 TO 1840+00				204	173	104			2252		87	28	82					
21	1840+00 TO 1850+00									2001				25					
22	1850+00 TO 1860+00									1991				25					
23	1860+00 TO 1870+00									1994				25					
24	1870+00 TO 1880+00									1999				25					
25	1880+00 TO 1890+00									2001				25					
26	1890+00 TO 1900+00									1999				25					
27	1900+00 TO 1910+00				937	88	320			1901				41					
28	1910+00 TO 1920+00									1999				25					
29	1920+00 TO 1930+00									2004				25					
30	1930+00 TO 1940+00									2002				25					
31	1940+00 TO 1950+00									2000				25					
32	1950+00 TO 1960+00				101		39			2000			5	28					
33	1960+00 TO 1964+90					310				821			31	21					
	WEST SERVICE RD. (WSR)																		
34	1641+42 TO 1648+00				368										100				
	TEMP CROSSOVER																		
35	1645+46 TO 1656+60									174		123	20						
	US 380 DECEL LANE																		
36	1180+28 TO 1186+87	790	535												780	790	535		
	FM 428																		
37	0+00 TO 15+00					986				1836	420		99	155					
38	15+00 TO 26+00					1058				2178	402		106	156					
	TOTAL	790	535	719	3779	4384	1348	9	9	65753	822	635	644	1361	880	790	535	9	9

"CONSTRUCTION RECORD DRAWINGS_8-01-2009

NO.	DATE	REVISION	APPROV.

DALLAS PARKWAY EXTENSION

COLLIN COUNTY

ITEM SUMMARY

PAVEMENT MARKINGS & MARKERS

Halff Associates, Inc.

ENGINEERS • ARCHITECTS • SCIENTISTS • PLANNERS • SURVEYORS

DRAWN MDB DATE DEC 2006 DESIGNED DDS DATE

CHECKED DDS DATE SCALE

BOND PROJECT NO. 03-13 SHEET 15 OF 271

P-200612-01

12/29/2006 10:25:16 AM

10:25:16 AM i:\23000s\23819\frisco\dgn\23819item07.dgn

		REMOVALS			DELINEATORS AND OBJECT MARKERS						
BID ITEM NO.		1	3	4	117	118	119	120	121	122	123
TxDOT ITEM NO.		104	105	106	658	658	658	658	658	658	658
SHEET	STATION	REMOVING CONC (PAV)	REMOVING STAB BASE AND ASPH PAV(1"-9")	OBLITERATING ABANDONED ROAD	INSTL OM ASSM (OM-2SRA) (WC) GND	INSTL DEL ASSM (D-SW)SZ 1(RCR)GF3	INSTL DEL ASSM (D-SW)SZ 1(RCR)GF3(BI)	INSTL DEL ASSM (D-SW)SZ (TYC)CTB	INSTL DEL ASSM (D-SW)SZ (TYC)CTB(BI)	INSTL DEL ASSM (D-SY)SZ 1(RCR)GF3	INSTL DEL ASSM (D-SY)SZ (TYC)CTB
		SY	SY	STA	EA	EA	EA	EA	EA	EA	EA
	EAST SERVICE RD. (ESR)										
1	1638+38 TO 1650+00			11.0		2		2		3	2
2	1650+00 TO 1660+00			0.3							
3	1660+00 TO 1670+00										
4	1670+00 TO 1680+00						6		4		
5	1680+00 TO 1690+00						2				
6	1690+00 TO 1700+00		289								
7	1700+00 TO 1710+00										
8	1710+00 TO 1720+00						8		4		
9	1720+00 TO 1730+00										
10	1730+00 TO 1740+00										
11	1740+00 TO 1750+00	209	323	5.5	1		9		2		
12	1750+00 TO 1760+00			10.0							
13	1760+00 TO 1770+00			10.0							
14	1770+00 TO 1780+00			1.0							
15	1780+00 TO 1790+00										
16	1790+00 TO 1800+00		276	1.0	2		6				
17	1800+00 TO 1810+00						4		2		
18	1810+00 TO 1820+00										
19	1820+00 TO 1830+00			2.0							
20	1830+00 TO 1840+00			3.0							
21	1840+00 TO 1850+00										
22	1850+00 TO 1860+00										
23	1860+00 TO 1870+00										
24	1870+00 TO 1880+00										
25	1880+00 TO 1890+00										
26	1890+00 TO 1900+00										
27	1900+00 TO 1910+00										
28	1910+00 TO 1920+00										
29	1920+00 TO 1930+00										
30	1930+00 TO 1940+00						4		0		
31	1940+00 TO 1950+00						4		4		
32	1950+00 TO 1960+00										
33	1960+00 TO 1964+90										
	WEST SERVICE RD. (WSR)										
34	1641+42 TO 1648+00					2		1		2	1
	TEMP CROSSOVER										
35	1645+46 TO 1656+60										
	US 380 DECEL LANE										
36	1180+28 TO 1186+87										
	FM 428										
37	0+00 TO 15+00										
38	15+00 TO 26+00										
	TOTAL	209	888	43.8	3	4	43	3	16	5	3

		TRAFFIC CONTROL				
BID ITEM NO.		108	127	125	126	124
TxDOT ITEM NO.		508	662	662	662	662
SHEET	STATION	CONSTRUCTING DETOURS	WK ZN PAV MRK NON-REMOV (W) 4" (SLD)	WK ZN PAV MRK NON-REMOV (Y) 4" (SLD)	WK ZN PAV MRK REMOV (W) 4" (SLD)	WK ZN PAV MRK REMOV (Y) 4" (SLD)
		SY	LF	LF	LF	LF
	US 380 / CR 27					
3	PHASE A	817				
4	PHASE B				1405	3320
	CR 3					
5	PHASE A	938				
5	PHASE B		709	702	261	678
6	PHASE C				813	813
	CR 4					
7	PHASE A	781				
7	PHASE B		602	579	400	423
8	PHASE C				972	973
	CR 5					
9	PHASE A	1053				
9	PHASE B		837	762	233	658
10	PHASE C				1466	1466
	CR 50					
11	PHASE A	971				
12	PHASE C				962	1009
	CR 51					
13	PHASE A	1017				
	FM 428					
15	PHASE B				4890	4890
	TOTAL	5577	2148	2043	11402	14230

		SW3P									
BID ITEM NO.		9	10	14	101	102	103	104	106	105	107
TxDOT ITEM NO.		160	164	169	506	506	506	506	506	506	506
SHEET	STATION	FURNISHING AND PLACING TOPSOIL (4")	BROADCAST SEED (PERM) (RURAL) (CLAY)	SOIL RETENTION BLANKETS (CL 2) (TY F)	ROCK FILTER DAMS (INSTALL) (TY 2)	ROCK FILTER DAMS (INSTALL) (TY 3)	ROCK FILTER DAMS (REMOVE)	CONSTRUCTION EXITS (INSTALL) (TY 1)	TEMPORARY SEDIMENT CONTROL FENCE	TEMP SEDIMENT CONTROL FENCE (REMOVE)	TEMP SDMT CONT FENCE (INLET PROTECT)
		SY	SY	SY	LF	LF	LF	SY	LF	LF	LF
	EAST SERVICE RD. (ESR)										
1	1638+38 TO 1750+00	119698	119698	8757	675	135	810	889	3524	5234	1710
2	1750+00 TO 1850+00	84704	84704	13930	345	120	465	444	5424	5784	360
3	1850+00 TO 1964+90	79393	79393	13224	550	100	500	333	4348	5818	1650
	TOTAL	283795	283795	35911	1570	355	1775	1666	13296	16836	3720

"CONSTRUCTION RECORD DRAWINGS_8-01-2009

NO.	DATE	REVISION	APPROV.

DALLAS PARKWAY EXTENSION

COLLIN COUNTY

ITEM SUMMARY

REMOVALS, DELINEATORS, OBJ. MARKERS, TRAFFIC CONTROL, & SW3P

Halff Associates, Inc.
ENGINEERS • ARCHITECTS • SCIENTISTS • PLANNERS • SURVEYORS

DRAWN MDB DATE DEC 2006 | DESIGNED DDS DATE
CHECKED DDS DATE | SCALE

BOND PROJECT NO. 03-13 SHEET 16 OF 271

P-200612-01

"CONSTRUCTION RECORD DRAWINGS — 8-01-2009

EARTHWORK SUMMARY
DALLAS PARKWAY

ITEM NO.	110	132
STATION	EXCAVATION (ROADWAY)	EMBANKMENT (FINAL) (DENS CONT) (TY C1)
	CY	CY
1639+00	0	0
1640+00	378	1266
1641+00	890	1034
1642+00	1217	1134
1643+00	925	925
1644+00	430	765
1645+00	257	680
1646+00	87	716
1647+00	73	802
1648+00	40	981
1649+00	15	1074
1650+00	59	847
1651+00	105	404
1652+00	130	156
1653+00	214	97
1654+00	271	72
1655+00	220	158
1656+00	138	315
1657+00	88	389
1658+00	105	351
1659+00	85	300
1660+00	57	253
1661+00	97	211
1662+00	274	158
1663+00	430	194
1664+00	440	286
1665+00	492	257
1666+00	517	171
1667+00	568	91
1668+00	650	42
1669+00	643	61
1670+00	631	141
1671+00	673	228
1672+00	713	281
1673+00	734	274
1674+00	769	190
1675+00	845	94
1676+00	965	42
1677+00	1098	25
1678+00	988	135
1679+00	835	256
1680+00	893	232
1681+00	910	214
1682+00	855	245
1683+00	786	245
1684+00	720	279
1685+00	670	312
1686+00	758	186
1687+00	449	78
1688+00	20	139
1689+00	5	285
1690+00	0	380
1691+00	5	440
1692+00	5	506
1693+00	9	321
1694+00	15	159
1695+00	10	177
1696+00	8	180
1697+00	5	253
1698+00	4	312
1699+00	4	303
1700+00	6	234
1701+00	9	165
1702+00	9	152
1703+00	6	143
1704+00	4	110
1705+00	11	84
1706+00	9	154
1707+00	2	288
1708+00	3	338
1709+00	2	342
1710+00	2	359

EARTHWORK SUMMARY
DALLAS PARKWAY

ITEM NO.	110	132
STATION	EXCAVATION (ROADWAY)	EMBANKMENT (FINAL) (DENS CONT) (TY C1)
	CY	CY
1711+00	2	374
1712+00	306	412
1713+00	854	531
1714+00	682	641
1715+00	229	651
1716+00	167	568
1717+00	117	587
1718+00	106	710
1719+00	152	701
1720+00	180	680
1721+00	198	612
1722+00	202	527
1723+00	176	538
1724+00	165	562
1725+00	173	520
1726+00	91	331
1727+00	0	160
1728+00	0	143
1729+00	0	190
1730+00	0	263
1731+00	0	321
1732+00	0	289
1733+00	0	178
1734+00	22	72
1735+00	73	22
1736+00	323	7
1737+00	576	0
1738+00	655	0
1739+00	780	0
1740+00	903	0
1741+00	908	0
1742+00	763	7
1743+00	605	137
1744+00	563	260
1745+00	904	366
1746+00	617	384
1747+00	1813	175
1748+00	2125	151
1749+00	578	296
1750+00	537	350
1751+00	580	251
1752+00	763	86
1753+00	952	12
1754+00	934	0
1755+00	749	6
1756+00	519	48
1757+00	341	110
1758+00	199	240
1759+00	135	291
1760+00	71	230
1761+00	0	214
1762+00	3	188
1763+00	5	174
1764+00	3	185
1765+00	10	159
1766+00	36	109
1767+00	61	82
1768+00	283	93
1769+00	552	91
1770+00	672	41
1771+00	406	16
1772+00	283	65
1773+00	469	142
1774+00	421	188
1775+00	446	157
1776+00	596	121
1777+00	504	631
1778+00	344	665
1779+00	413	285
1780+00	447	380
1781+00	455	336
1782+00	490	241

EARTHWORK SUMMARY
DALLAS PARKWAY

ITEM NO.	110	132
STATION	EXCAVATION (ROADWAY)	EMBANKMENT (FINAL) (DENS CONT) (TY C1)
	CY	CY
1783+00	559	140
1784+00	688	61
1785+00	693	50
1786+00	584	97
1787+00	560	189
1788+00	600	192
1789+00	681	105
1790+00	760	52
1791+00	793	51
1792+00	791	121
1793+00	805	199
1794+00	837	162
1795+00	891	70
1796+00	1134	26
1797+00	855	956
1798+00	190	1092
1799+00	7	261
1800+00	6	247
1801+00	5	253
1802+00	10	183
1803+00	16	111
1804+00	79	348
1805+00	160	759
1806+00	184	953
1807+00	358	1019
1808+00	534	991
1809+00	572	574
1810+00	566	167
1811+00	502	113
1812+00	447	124
1813+00	393	135
1814+00	374	143
1815+00	382	144
1816+00	376	157
1817+00	349	206
1818+00	311	254
1819+00	294	262
1820+00	297	241
1821+00	308	198
1822+00	326	160
1823+00	372	120
1824+00	467	73
1825+00	516	74
1826+00	488	128
1827+00	456	278
1828+00	403	483
1829+00	333	545
1830+00	302	449
1831+00	278	405
1832+00	131	540
1833+00	62	446
1834+00	113	288
1835+00	106	339
1836+00	115	396
1837+00	105	456
1838+00	83	453
1839+00	75	475
1840+00	72	475
1841+00	81	432
1842+00	97	354
1843+00	52	203
1844+00	4	96
1845+00	17	66
1846+00	97	99
1847+00	133	238
1848+00	50	282
1849+00	0	172
1850+00	68	63
1851+00	331	6
1852+00	762	0
1853+00	498	234
1854+00	0	1272

EARTHWORK SUMMARY
DALLAS PARKWAY

ITEM NO.	110	132
STATION	EXCAVATION (ROADWAY)	EMBANKMENT (FINAL) (DENS CONT) (TY C1)
	CY	CY
1855+00	0	2863
1856+00	0	3079
1857+00	0	2132
1858+00	0	2008
1859+00	0	3142
1860+00	0	5194
1861+00	BRIDGE	BRIDGE
1862+00		
1863+00		
1864+00		
1865+00		
1866+00		
1867+00	0	0
1868+00	0	5343
1869+00	44	2762
1870+00	529	592
1871+00	882	466
1872+00	768	491
1873+00	739	525
1874+00	750	595
1875+00	756	615
1876+00	744	498
1877+00	726	326
1878+00	698	200
1879+00	669	147
1880+00	637	218
1881+00	589	335
1882+00	535	360
1883+00	488	267
1884+00	434	205
1885+00	400	257
1886+00	397	328
1887+00	404	362
1888+00	426	318
1889+00	461	175
1890+00	434	106
1891+00	400	128
1892+00	401	179
1893+00	380	270
1894+00	358	265
1895+00	349	159
1896+00	347	92
1897+00	313	103
1898+00	263	137
1899+00	227	184
1900+00	208	228
1901+00	211	258
1902+00	218	286
1903+00	220	293
1904+00	225	302
1905+00	227	320
1906+00	233	369
1907+00	147	430
1908+00	238	278
1909+00	454	73
1910+00	467	32
1911+00	407	55
1912+00	346	109
1913+00	305	155
1914+00	263	214
1915+00	234	273
1916+00	211	328
1917+00	195	364
1918+00	186	377
1919+00	187	363
1920+00	209	319
1921+00	239	265
1922+00	263	182
1923+00	236	135
1924+00	166	236
1925+00	301	181
1926+00	589	16

EARTHWORK SUMMARY
DALLAS PARKWAY

ITEM NO.	110	132
STATION	EXCAVATION (ROADWAY)	EMBANKMENT (FINAL) (DENS CONT) (TY C1)
	CY	CY
1927+00	719	11
1928+00	398	16
1929+00	74	12
1930+00	69	8
1931+00	152	2
1932+00	135	32
1933+00	14	152
1934+00	6	251
1935+00	45	352
1936+00	71	406
1937+00	63	395
1938+00	50	444
1939+00	45	809
1940+00	48	1099
1941+00	50	1010
1942+00	71	893
1943+00	100	658
1944+00	145	388
1945+00	235	189
1946+00	310	96
1947+00	325	78
1948+00	353	56
1949+00	316	94
1950+00	267	144
1951+00	254	175
1952+00	301	137
1953+00	389	114
1954+00	206	179
1955+00	4	330
1956+00	0	543
1957+00	0	610
1958+00	0	529
1959+00	0	382
1960+00	0	365
1961+00	0	360
1962+00	27	170
1963+00	66	40
1964+00	54	42
TOTALS	1 106,066	1 116,968

EARTHWORK SUMMARY
FM 428

ITEM NO.	110	132
STATION	EXCAVATION (ROADWAY)	EMBANKMENT (FINAL) (DENS CONT) (TY C1)
	CY	CY
5+00	0	0
6+00	37	103
7+00	74	191
8+00	132	273
9+00	206	329
10+00	290	341
11+00	180	374
12+00	18	377
13+00	17	365
14+00	20	393
15+00	19	383
16+00	22	382
17+00	28	393
18+00	32	387
19+00	30	385
20+00	26	384
21+00	23	362
22+00	20	336
23+00	22	275
24+00	33	127
TOTALS	1,229	6,160

NO.	DATE	REVISION	APPROV.
1	1/19/07	ADDENDUM #2	D. SATRE

DALLAS PARKWAY EXTENSION

COLLIN COUNTY

EARTHWORK SUMMARY

Halff Associates, Inc.
ENGINEERS · ARCHITECTS · SCIENTISTS · PLANNERS · SURVEYORS

DRAWN MDB DATE DEC 2006 | DESIGNED DDS DATE
CHECKED DDS DATE | SCALE

BOND PROJECT NO. 03-13 SHEET 17 OF 271

P-200612-01

I. GENERAL NOTES

I.A. MAINTENANCE AND PROTECTION OF TRAFFIC SHALL BE PROVIDED IN ACCORDANCE WITH SECTION 502 OF THE TEXAS DEPARTMENT OF TRANSPORTATION STANDARD SPECIFICATIONS, THE TEXAS MANUAL OF UNIFORM TRAFFIC CONTROL DEVICES (TMUTCD) AND ANY PROVISIONS CONTAINED IN THE PLANS, PROPOSAL AND OTHER CONTRACT DOCUMENTS.

I.B. THE TEMPORARY AND PERMANENT TRAFFIC SIGN LOCATIONS SHOWN ON THESE PLANS ARE APPROXIMATE. THE EXACT LOCATIONS SHALL BE APPROVED IN THE FIELD BY THE ENGINEER AND SHALL CONFORM TO THE ADVANCE POSTING DISTANCES, SPACING AND VISIBILITY REQUIREMENTS SHOWN IN THE TMUTCD.

I.C. VEHICLES BELONGING TO THE CONTRACTOR, SUBCONTRACTOR OR THEIR EMPLOYEES SHALL NOT USE THE ADJACENT LOCAL STREETS FOR PARKING OR FOR STORING EQUIPMENT AND MATERIALS.

I.D. THE CONTRACTOR SHALL NOT PARK HIS EQUIPMENT OVERNIGHT WHERE IT IS DEEMED BY THE ENGINEER TO BE A SAFETY HAZARD.

I.E. THE CONTRACTOR SHALL MAINTAIN ACCESS TO ALL PUBLIC AND PRIVATE DRIVEWAYS DURING ALL PHASES OF CONSTRUCTION UNLESS OTHER ARRANGEMENTS ACCEPTABLE TO BOTH THE ENGINEER AND PROPERTY OWNERS/OCCUPANTS ARE MADE PRIOR TO ACCESS RESTRICTION.

I.F. CHANNELIZING DEVICES SHALL BE PLACED AT 20' INTERVALS UNLESS OTHERWISE DIRECTED BY THE ENGINEER.

I.G. BATTERY PACKS FOR BARRICADE LIGHTING SHALL BE PLACED AT THE BASE OF THE BARRICADE.

I.H.. FLASHING LIGHTS ON CONSTRUCTION BARRICADES PLACED TRANSVERSELY ACROSS THE ROADWAY SHALL BE TYPE B. CONSTRUCTION BARRICADES SHALL BE TYPE III.

I.I. ACCESS FOR EMERGENCY VEHICLES AND SCHOOL BUSES SHALL BE MAINTAINED AT ALL TIMES.

I.J. THE CONTRACTOR SHALL SUBMIT TO THE ENGINEER A SCHEDULE FOR EACH CONSTRUCTION PHASE. THIS SCHEDULE SHALL INCLUDE THE DATES AND DURATION OF EACH FULL AND PARTIAL ROADWAY CLOSURE. CONSTRUCTION SHALL NOT BEGIN UNTIL THIS SCHEDULE IS APPROVED IN WRITING BY THE ENGINEER. ONCE CONSTRUCTION BEGINS, ANY CHANGES REQUESTED BY THE CONTRACTOR TO THIS SCHEDULE SHALL REQUIRE WRITTEN APPROVAL FROM THE ENGINEER.

I.K. NIGHTTIME WORK ON THIS PROJECT SHALL NOT BE ALLOWED FROM SUNSET TO 7:00 A.M. UNLESS A NIGHTTIME WORK PLAN IS SUBMITTED IN WRITING BY THE CONTRACTOR AND APPROVED IN WRITING BY THE ENGINEER.

I.L. THE CONTRACTOR SHALL PROVIDE A LIST OF THE NAMES, ADDRESSES AND TELEPHONE NUMBERS OF HIS PRINCIPALS AND AUTHORIZED REPRESENTATIVES WHO MAY BE CONTACTED IN CASE OF EMERGENCY. THIS INFORMATION SHALL BE PROVIDED IN WRITING TO THE TOWN OF PROSPER POLICE DEPARTMENT, THE CITY OF CELINA POLICE DEPARTMENT, THE COLLIN COUNTY SHERRIFF AND THE ENGINEER.

I.M. THE CONTRACTOR SHALL COORDINATE HIS WORK WITH THE UTILITY COMPANIES WHOSE FACILITIES ARE LOCATED WITHIN THE PROJECT LIMITS.

I.N. THE CONTRACTOR SHALL COVER EXISTING TRAFFIC SIGNS WHICH CONFLICT WITH THE TRAFFIC CONTROL SIGNS.

I.O. EXISTING AND TEMPORARY PAVEMENT MARKINGS IN THE PROJECT AREA AND LANE SHIFTS OUTSIDE THE PROJECT AREA SHALL REMAIN VISIBLE AT ALL TIMES. IF, IN THE OPINION OF THE ENGINEER,
THE MARKINGS HAVE LOST THEIR EFFECTIVENESS DUE TO WEAR,
THE MARKINGS SHALL BE REAPPLIED AS INSTRUCTED BY THE ENGINEER.

II. ROADWAY AND LANE CLOSURES

II.A. THE CONTRACTOR SHALL SUBMIT TO THE ENGINEER A SCHEDULE FOR EACH CONSTRUCTION PHASE. THIS SCHEDULE SHALL MINIMIZE THE LENGTH OF TIME FOR STREET CLOSURES, LANE CLOSURES AND USE OF DETOURS. ROADWAY CONSTRUCTION ON THE PERMANENT CROSS STREET PAVEMENT SHALL BE COMPLETED WITHIN 60 CALENDAR DAYS OF THE PLACEMENT OF THE TEMPORARY DETOUR PAVEMENT. THE INTENT OF THIS PROJECT IS TO MINIMIZE THE AMOUNT OF TIME THAT DETOURS AND CLOSURES OF LOCAL STREETS ARE USED.

II.B. US 380 - IN GENERAL, TWO-WAY FOUR-LANE TRAFFIC SHALL BE PROVIDED ON US 380 DURING NON-WORKING HOURS AND FROM 6:00 A.M. TO 9:00 A.M WEEKDAYS AND FROM 3:00 P.M. TO 7:00 P.M. WEEKDAYS. AT OTHER TIMES DURING WORKING HOURS, ONE-LANE TRAFFIC MAY BE PROVIDED ON US 380 WESTBOUND (PER TMUTCD TYPICAL APPLICATION 33 - SHORT TERM), SUBJECT TO APPROVAL BY THE ENGINEER.

II.C. CR 3, CR 4, CR 5, CR 50, CR 51, FM 428 - IN GENERAL, TWO-WAY TWO-LANE TRAFFIC SHALL BE PROVIDED ON THESE ROADWAYS DURING NON-WORKING HOURS AND FROM 6:00 A.M. TO 9:00 A.M WEEKDAYS AND FROM 3:00 P.M. TO 7:00 P.M. WEEKDAYS. AT OTHER TIMES DURING WORKING HOURS, ONE-LANE TWO-WAY TRAFFIC MAY BE PROVIDED (PER TMUTCD TYPICAL APPLICATION 10), SUBJECT TO APPROVAL BY THE ENGINEER.

II.F. CR 49 - AS PART OF THIS PROJECT, COUNTY ROAD 49 WILL BE PARTIALLY ABANDONED IN PLACE BETWEEN COUNTY ROAD 4 AND COUNTY ROAD 5. COUNTY ROAD 49 MAY BE PERMANENTLY CLOSED DURING CONSTRUCTION OF COUNTY ROAD 4. THE INTENT OF THIS PROJECT IS TO MINIMIZE THE LENGTH OF TIME BETWEEN THE CLOSURE OF COUNTY ROAD 49 AND THE OPENING OF DALLAS PARKWAY.

II.G. CR 50 - CR 50 MAY BE CLOSED FOR ONE WEEKEND AFTER DALLAS PARKWAY IS OPENED, TO ALLOW FOR THE CONSTRUCTION OF PERMANENT ASPHALT PAVEMENT FROM CR 50 TO DALLAS PARKWAY.

III. SITE ACCESS.

III.A. CONSTRUCTION VEHICLES SHALL FOLLOW THE SIZE AND WEIGHT RESTRICTIONS FOR THE LOCAL STREET NETWORK ADJACENT TO THE PROJECT AREA.

III.B. THE CONTRACTOR MAY CONSTRUCT STABILIZED HAUL ROADS WITHIN THE DALLAS PARKWAY ROW TO ACCESS THE PROPOSED BRIDGE OVER DOE BRANCH AND OTHER PROJECT AREAS. LOCATIONS OF HAUL ROADS SHALL BE SUBJECT TO APPROVAL BY THE ENGINEER. NO TEMPORARY CROSSINGS OF THE "WATERS OF THE U.S." SHALL BE ALLOWED.

IV. SEQUENTIAL ESTABLISHMENT OF TRAFFIC ON DALLAS PARKWAY

IV.A. DALLAS PARKWAY SHALL BE OPENED TO TRAFFIC FROM US 380 TO STA 1661+00 ON OR BEFORE AUGUST 1, 2007.

IV.B. DALLAS PARKWAY MAY BE OPENED IN PHASES, IN A SOUTH-TO-NORTH DIRECTION, TO CR 3, CR 4 AND CR 5.

IV.C. DALLAS PARKWAY FROM CR 5 TO FM 428 SHALL NOT BE OPENED TO TRAFFIC UNTIL DALLAS PARKWAY IS COMPLETELY OPENED FROM US 380 TO CR 5.

V. TEMPORARY PAVEMENT

V.A. TEMPORARY PAVEMENT SHALL BE PAID UNDER "CONSTRUCTING DETOURS" AND SHALL INCLUDE ALL EARTHWORK, TEMPORARY PIPE AND PAVEMENT COURSES. SEE PLAN SHEETS FOR SPECIFIC "TEMPORARY GRADE TO DRAIN" LOCATIONS.

V.B. CR 27 (STA 1651+00 AND STA 1660+00)
EXISTING PAVEMENT - ASPHALT
TEMPORARY PAVEMENT - 6" TYPE B HMAC AND 12" FLEX BASE (GRADE 2)

V.C. FIRST STREET (CR 3) (STA 1692+00)
EXISTING PAVEMENT - ASPHALT
TEMPORARY PAVEMENT - 4" HMAC TYPE B AND 8" RECYCLED ASPHALT PAVEMENT.

V.D. PROSPER TRAIL (CR 4) (STA 1744+00)
EXISTING PAVEMENT - CONCRETE AND ASPHALT
TEMPORARY PAVEMENT - 4" HMAC TYPE B AND 8" RECYCLED ASPHALT PAVEMENT.

V.E CR 5 (STA 1798+00)
EXISTING PAVEMENT - GRAVEL
TEMPORARY PAVEMENT - 8" RECYCLED ASPHALT PAVEMENT

V.F. CR 50 (STA 1829+00)
EXISTING PAVEMENT - GRAVEL
TEMPORARY PAVEMENT (DETOUR) - 8" RECYCLED ASPHALT PAVEMENT
TEMPORARY DETOUR (PHASE A) - 4" HMAC TYPE B AND 8" RECYCLED ASPHALT PAVEMENT

V.E CR 51 (STA 1907+00)
EXISTING PAVEMENT - GRAVEL
TEMPORARY PAVEMENT - 8" RECYCLED ASPHALT PAVEMENT

"CONSTRUCTION RECORD DRAWINGS_8-01-2009

STATE OF TEXAS
GARY B. SAVANYU
84411
LICENSED
PROFESSIONAL ENGINEER
12/28/2006

NO.	DATE	REVISION	APPROV.

DALLAS PARKWAY EXTENSION

COLLIN COUNTY

TRAFFIC CONTROL PLAN
NOTES

Halff Associates, Inc.
ENGINEERS · ARCHITECTS · SCIENTISTS · PLANNERS · SURVEYORS

DRAWN GBS	DATE DEC 2006	DESIGNED GBS	DATE DEC 2006
CHECKED DDS	DATE	SCALE	

BOND PROJECT NO. 03-13 SHEET 18 OF 271

P-200612-01

0 1500 3000 4500 6000
SCALE IN FEET

N

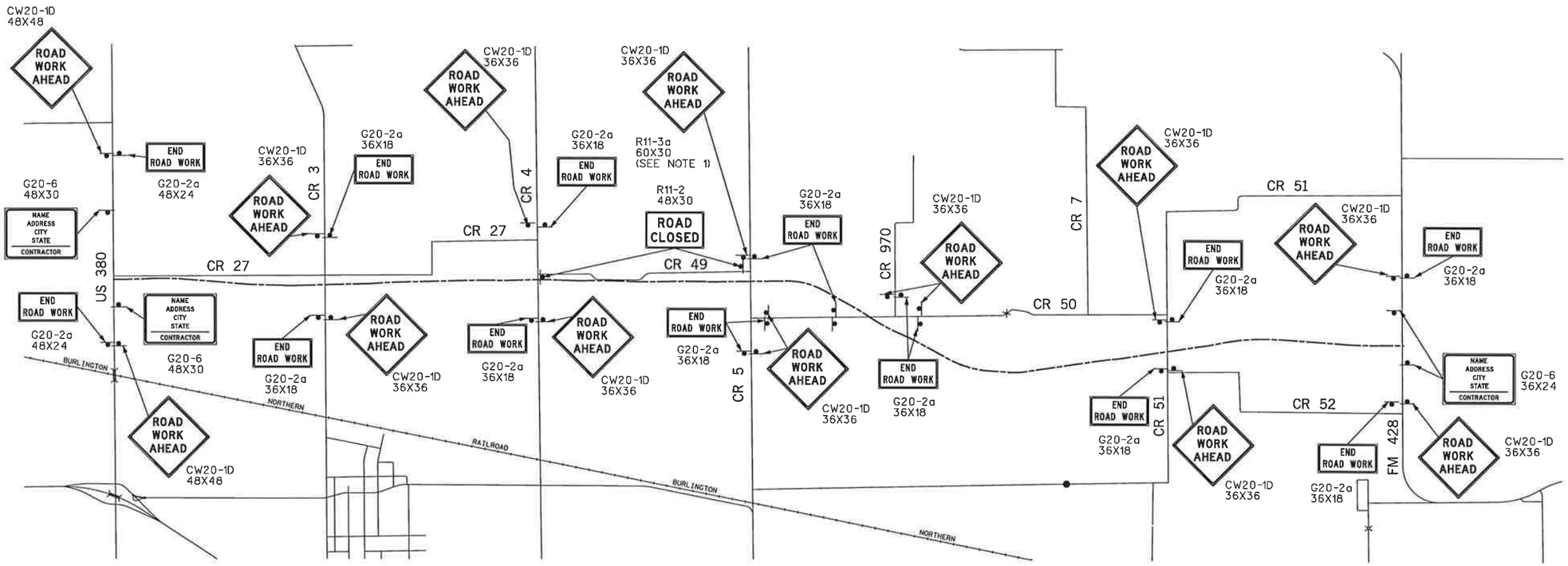

"CONSTRUCTION RECORD DRAWINGS _8-01-2009

STATE OF TEXAS
GARY B. SAVANYU
84411
LICENSED PROFESSIONAL ENGINEER
12/28/2006

NO.	DATE	REVISION	APPROV.

DALLAS PARKWAY EXTENSION

COLLIN COUNTY

TRAFFIC CONTROL PLAN
ADVANCE WARNING SIGNS

Halff Associates, Inc.
ENGINEERS · ARCHITECTS · SCIENTISTS · PLANNERS · SURVEYORS

DRAWN GBS	DATE DEC 2006	DESIGNED GBS	DATE DEC 2006
CHECKED DDS	DATE	SCALE 1"=3000'	

BOND PROJECT NO. 03-13 SHEET 19 OF 271

P-200612-01

2:57:18 PM
I:\23000s\23819\FRISCO\DGN\23819TCP12.dgn
12/28/2006 2:57:18 PM

PHASE A SUMMARY:

A. CONSTRUCT CONCRETE PAVEMENT ON US 380, ESR, WSR, AND CROSSOVER, EXCEPT FOR THE AREA CROSSING CR 27.
B. CONSTRUCT ASPHALT DETOURS FOR CR 27 FOR PHASE B TRAFFIC MOVEMENTS.
C. CONSTRUCT DRAINAGE IMPROVEMENTS AS SHOWN.
D. MAINTAIN TRAFFIC ON EXISTING CR 27.

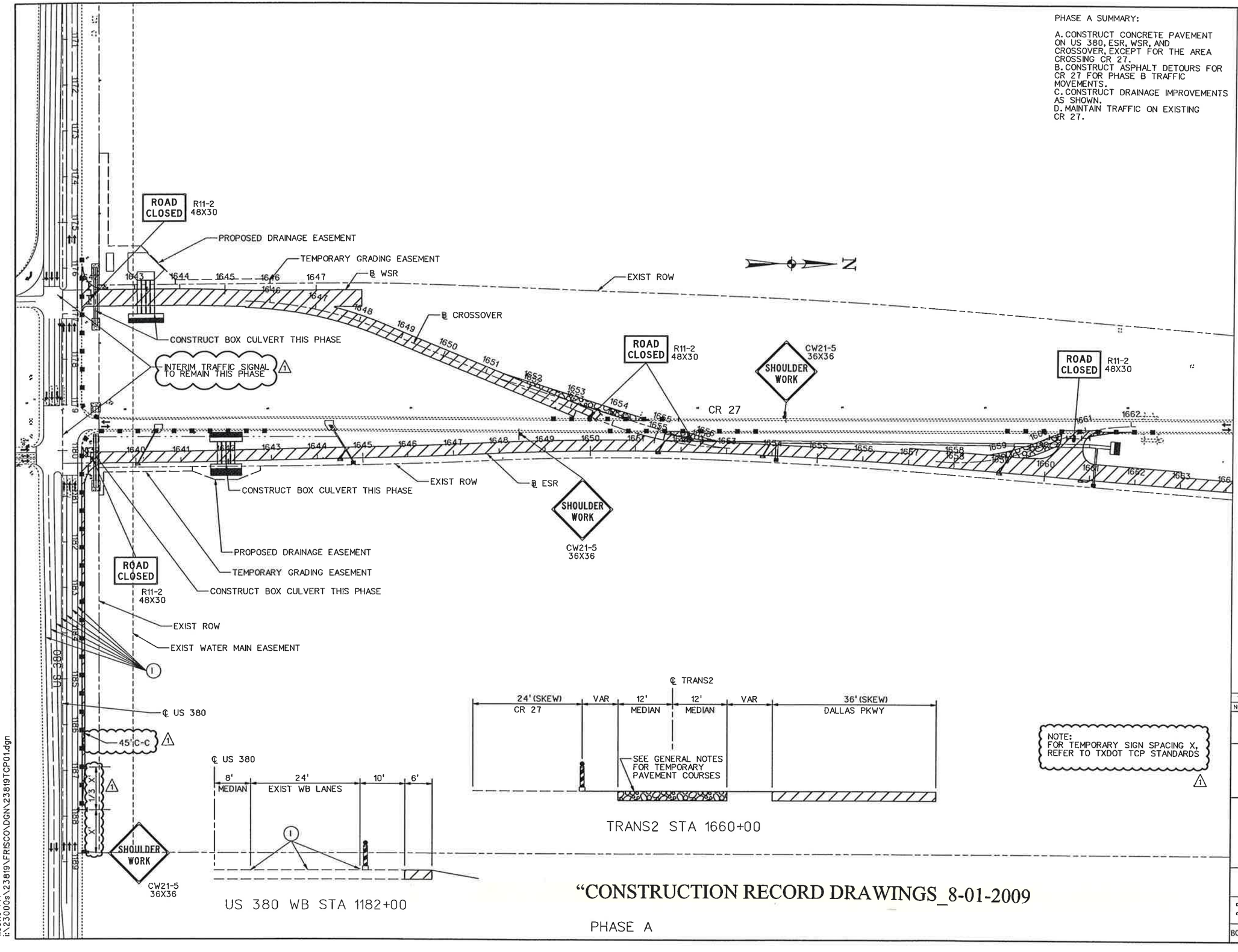

0 100 200 300 400
SCALE IN FEET

LEGEND

- CONC PVMT (THIS PHASE)
- CONC PVMT (PREVIOUS PHASES)
- D-GR HMA (THIS PHASE)
- D-GR HMA (PREVIOUS PHASES)
- TEMP PVMT (THIS PHASE)
- TEMP PVMT (PREVIOUS PHASES)
- TRAFFIC FLOW
- TY III BARRICADE
- TRAFFIC SIGN
- DELINEATION DEVICES (PLAN VIEW)
- DELINEATION DEVICES (SECTION VIEW)
- LOW PROF CON BARR (SECTION VIEW)
- LOW PROF CONC BARR (PLAN VIEW)
- (A) WK ZN PAV MRK REMOV (Y) 4" (SLD)
- (B) WK ZN PAV MRK NON-REMOV (Y) 4" (SLD)
- (C) WK ZN PAV MRK REMOV (W) 4" (SLD)
- (D) WK ZN PAV MRK NON-REMOV (W) 4" (SLD)
- (E) WK ZN PAV MRK REMOV (W) 8" (SLD)
- (F) WK ZN PAV MRK REMOV (W) 24" (SLD)
- (G) WK ZN PAV MRK REMOV (W) (ARROW)
- (H) WK ZN PAV MRK REMOV (W) (WORD)
- (I) EXIST PAV MRK
- (J) PERMANENT PAV MRK
- (K) PERMANENT TRAFFIC SIGN

STATE OF TEXAS
GARY B. SAVANYU
84411
LICENSED PROFESSIONAL ENGINEER
03/30/2007

NO.	DATE	REVISION	APPROV.
1	3/30/07	TxDOT DRIVEWAY PERMIT - C.O. #1	SAVANYU

DALLAS PARKWAY EXTENSION

COLLIN COUNTY

TRAFFIC CONTROL PLAN
US 380 / CR 27
1 OF 2

Halff Associates, Inc.
ENGINEERS · ARCHITECTS · SCIENTISTS · PLANNERS · SURVEYORS

DRAWN GBS DATE DEC 2006 | DESIGNED GBS DATE DEC 2006
CHECKED DDS DATE | SCALE 1"=200'

BOND PROJECT NO. 03-13 SHEET 20 OF 271

"CONSTRUCTION RECORD DRAWINGS_8-01-2009

PHASE A

1:39:10 PM
i:\23000s\23819\FRISCO\DGN\23819TCP01.dgn

5/9/2007 1:39:10 PM

P-200612-01

PHASE B SUMMARY:

A. SWITCH TRAFFIC ON CR 27 TO CONCRETE PAVEMENT AND ASPHALT DETOURS CONSTRUCTED IN PHASE A (SOUTH OF STA 1662+00).
B. CONSTRUCT CONCRETE PAVEMENT ACROSS CR 27 (STA 1653+00 TO STA 1655+00).
C. MAINTAIN TRAFFIC ON CR 27 NORTH OF STA 1662+00

PHASE C SUMMARY (END OF PROJECT):

A. SWITCH TRAFFIC TO COMPLETED DALLAS PARKWAY (NORTH OF STA 1662+00).
B. REMOVE ASPHALT DETOURS TCP-01 AND TRANS2.
C. CONSTRUCT DOWELLED CONCRETE CURB ON DALLAS PARKWAY IN VICINITY OF REMOVED ASPHALT DETOURS.

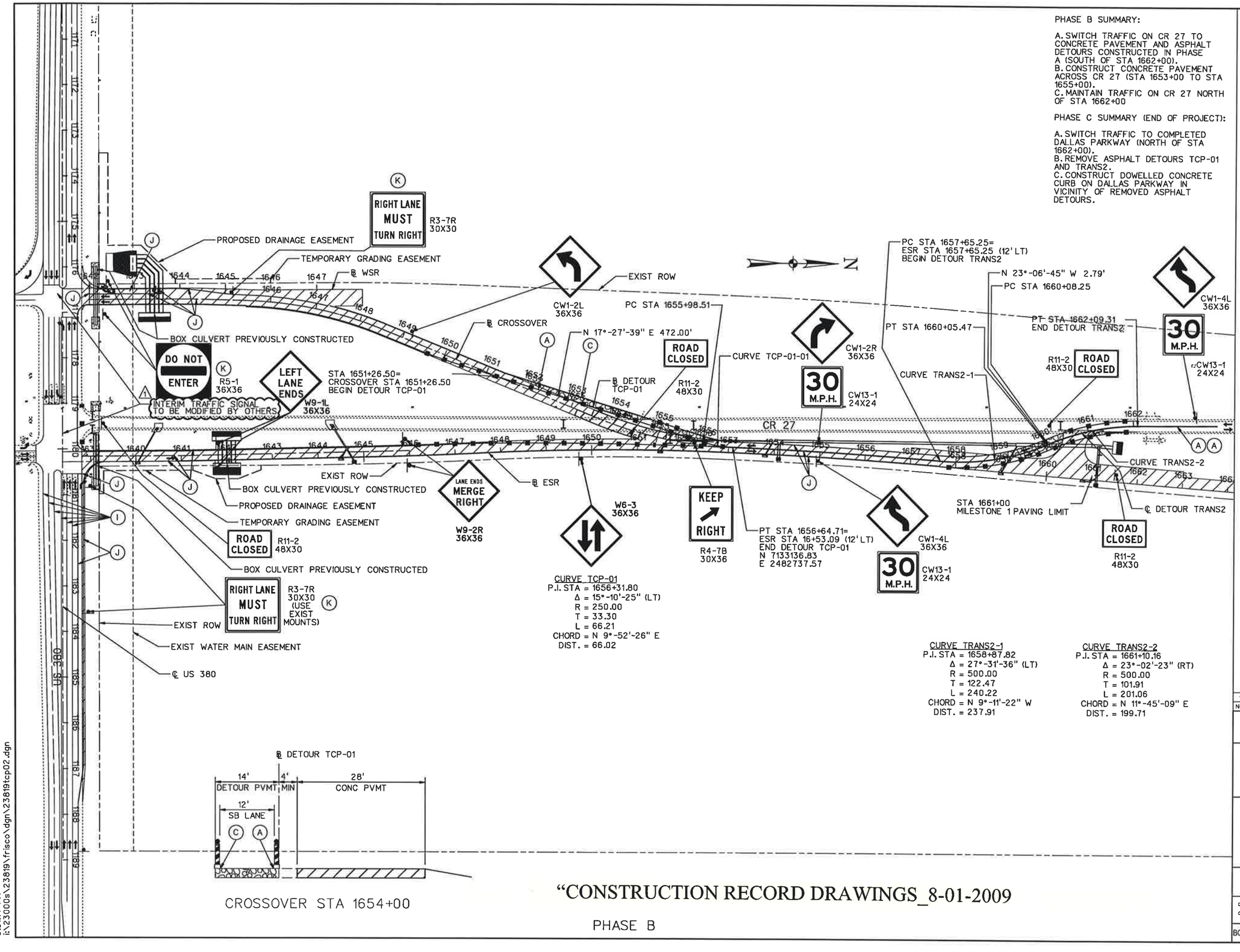

0 100 200 300 400
SCALE IN FEET

LEGEND

- CONC PVMT (THIS PHASE)
- CONC PVMT (PREVIOUS PHASES)
- D-GR HMA (THIS PHASE)
- D-GR HMA (PREVIOUS PHASES)
- TEMP PVMT (THIS PHASE)
- TEMP PVMT (PREVIOUS PHASES)
- TRAFFIC FLOW
- TY III BARRICADE
- TRAFFIC SIGN
- DELINEATION DEVICES (PLAN VIEW)
- DELINEATION DEVICES (SECTION VIEW)
- LOW PROF CON BARR (SECTION VIEW)
- LOW PROF CONC BARR (PLAN VIEW)
- (A) WK ZN PAV MRK REMOV (Y) 4" (SLD)
- (B) WK ZN PAV MRK NON-REMOV (Y) 4" (SLD)
- (C) WK ZN PAV MRK REMOV (W) 4" (SLD)
- (D) WK ZN PAV MRK NON-REMOV (W) 4" (SLD)
- (E) WK ZN PAV MRK REMOV (W) 8" (SLD)
- (F) WK ZN PAV MRK REMOV (W) 24" (SLD)
- (G) WK ZN PAV MRK REMOV (W) (ARROW)
- (H) WK ZN PAV MRK REMOV (W) (WORD)
- (I) EXIST PAV MRK
- (J) PERMANENT PAV MRK
- (K) PERMANENT TRAFFIC SIGN

STATE OF TEXAS
GARY B. SAVANYU
84411
LICENSED PROFESSIONAL ENGINEER
03/30/2007

NO.	DATE	REVISION	APPROV.
1	3/30/07	TxDOT DRIVEWAY PERMIT - C.O. #1	SAVANYU

DALLAS PARKWAY EXTENSION

COLLIN COUNTY

TRAFFIC CONTROL PLAN
US 380 / CR 27
2 OF 2

Halff Associates, Inc.
ENGINEERS · ARCHITECTS · SCIENTISTS · PLANNERS · SURVEYORS

DRAWN	GBS	DESIGNED	GBS
DATE	DEC 2006	DATE	DEC 2006
CHECKED	DDS	SCALE	1"=200'
DATE			

BOND PROJECT NO. 03-13 SHEET 21 OF 271

"CONSTRUCTION RECORD DRAWINGS_8-01-2009

PHASE B

N

EXIST ROW

FUTURE ROW

CR 27

1694

1693

1691

1690

℄ ESR

EXIST ROW

CONSTRUCT PORTION OF STORM SEWER AND TEMPORARY EXTENSION OF PIPE

PROPOSED DRAINAGE EASEMENT

TEMPORARY GRADE TO DRAIN

ROAD CLOSED R11-2 48X30

ROAD CLOSED R11-2 48X30

ROAD CLOSED R11-2 48X30

SHOULDER WORK CW21-5 36X36

FIRST ST

℄ CR 3

STOP R1-1 EXIST

FH

DETOUR PAVEMENT CONSTRUCTION:

A. CONSTRUCT DETOUR PAVEMENT ON CR 3.
B. MAINTAIN TRAFFIC ON CR 3.

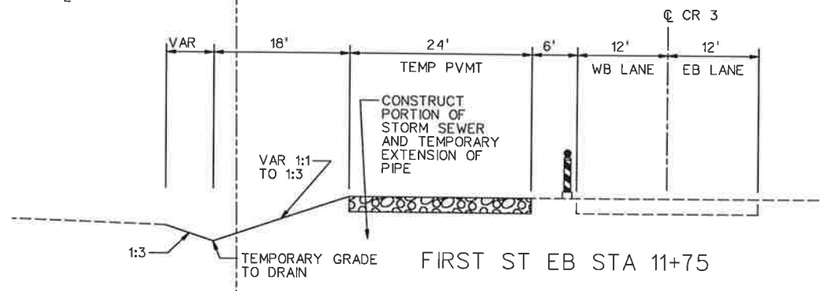

FIRST ST EB STA 11+75

DETOUR PAVEMENT CONSTRUCTION

"CONSTRUCTION RECORD DRAWINGS_8-01-2009

N

EXIST ROW

FUTURE ROW

CR 27

1694

1693

1691

1690

℄ ESR

EXIST ROW

PT STA 10+80.50

PRC STA 9+93.46

CURVE TCP-02-01

PC STA 9+06.42= CR 3 STA 9+06.42 BEGIN DETOUR TCP-02

R11-2 48X30 ROAD CLOSED

N 89°-30'-17" E 150.71'

℄ DETOUR TCP-02

PROPOSED DRAINAGE EASEMENT

PC STA 12+31.21

CURVE TCP-02-03

PRC STA 13+18.25

PT STA 14+05.29= CR 3 STA 13+98.30 END DETOUR TCP-02

CW1-4R 36X36

25 M.P.H. CW13-1 24X24

CR 3

FIRST STREET (CR 3)

CURVE TCP-02-02

ROAD CLOSED R11-2 48X30

CURVE TCP-02-04

CW1-4L 36X36

CW13-1 24X24 25 M.P.H.

CW1-4L 36X36

CW1-4R 36X36

STOP R1-1 EXIST

℄ CR 3

CONSTRUCT PORTION OF STORM SEWER

FH

PHASE A SUMMARY:

A. SWITCH CR 3 TRAFFIC TO TEMPORARY PAVEMENT CONSTRUCTED PRIOR TO PHASE A.
B. CONSTRUCT ASPHALT AND CONCRETE PAVEMENT EXCEPT FOR THE AREA OF THE CR 3 DETOUR.
C. MAINTAIN TRAFFIC ON CR 3.

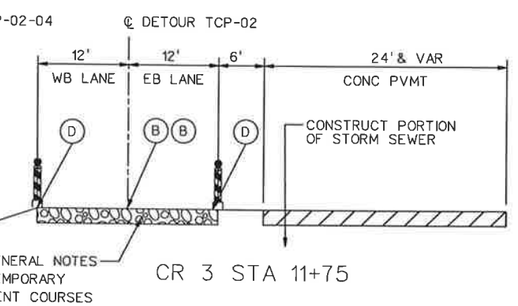

CR 3 STA 11+75

PHASE A

CURVE TCP-02-03
P.I. STA = 12+75.17
Δ = 19°-56'-54" (RT)
R = 250.00
T = 43.97
L = 87.04
CHORD = S 80°-31'-16" E
DIST. = 86.60

CURVE TCP-02-04
P.I. STA = 13+62.21
Δ = 19°-56'-54" (LT)
R = 250.00
T = 43.97
L = 87.04
CHORD = S 80°-31'-16" E
DIST. = 86.60

CURVE TCP-02-01
P.I. STA = 9+50.38
Δ = 19°-56'-54" (LT)
R = 250.00
T = 43.97
L = 87.04
CHORD = N 79°-31'-49" E
DIST. = 86.60

CURVE TCP-02-02
P.I. STA = 10+37.42
Δ = 19°-56'-54" (RT)
R = 250.00
T = 43.97
L = 87.04
CHORD = N 79°-31'-49" E
DIST. = 86.60

0 50 100 150 200
SCALE IN FEET

LEGEND

- CONC PVMT (THIS PHASE)
- CONC PVMT (PREVIOUS PHASES)
- D-GR HMA (THIS PHASE)
- D-GR HMA (PREVIOUS PHASES)
- TEMP PVMT (THIS PHASE)
- TEMP PVMT (PREVIOUS PHASES)
- TRAFFIC FLOW
- TY III BARRICADE
- TRAFFIC SIGN
- DELINEATION DEVICES (PLAN VIEW)
- DELINEATION DEVICES (SECTION VIEW)
- LOW PROF CON BARR (SECTION VIEW)
- LOW PROF CONC BARR (PLAN VIEW)
- (A) WK ZN PAV MRK REMOV (Y) 4" (SLD)
- (B) WK ZN PAV MRK NON-REMOV (Y) 4" (SLD)
- (C) WK ZN PAV MRK REMOV (W) 4" (SLD)
- (D) WK ZN PAV MRK NON-REMOV (W) 4" (SLD)
- (E) WK ZN PAV MRK REMOV (W) 8" (SLD)
- (F) WK ZN PAV MRK REMOV (W) 24" (SLD)
- (G) WK ZN PAV MRK REMOV (W) (ARROW)
- (H) WK ZN PAV MRK REMOV (W) (WORD)
- (I) EXIST PAV MRK
- (J) PERMANENT PAV MRK
- (K) PERMANENT TRAFFIC SIGN

STATE OF TEXAS
GARY B. SAVANYU
84111
LICENSED PROFESSIONAL ENGINEER
12/28/2006

NO.	DATE	REVISION	APPROV.

DALLAS PARKWAY EXTENSION

COLL. CO. COUNTY

TRAFFIC CONTROL PLAN
CR 3

1 OF 2

Halff Associates, Inc.
ENGINEERS · ARCHITECTS · SCIENTISTS · PLANNERS · SURVEYORS

DRAWN GBS DATE DEC 2006 DESIGNED GBS DATE DEC 2006
CHECKED DDS DATE SCALE 1"=100'

BOND PROJECT NO. 03-13 SHEET 22 OF 271

P-200612-01

1:58:01 PM
I:\23000s\23819\FRISCO\DGN\23819TCP03.dgn

12/28/2006 1:58:01 PM

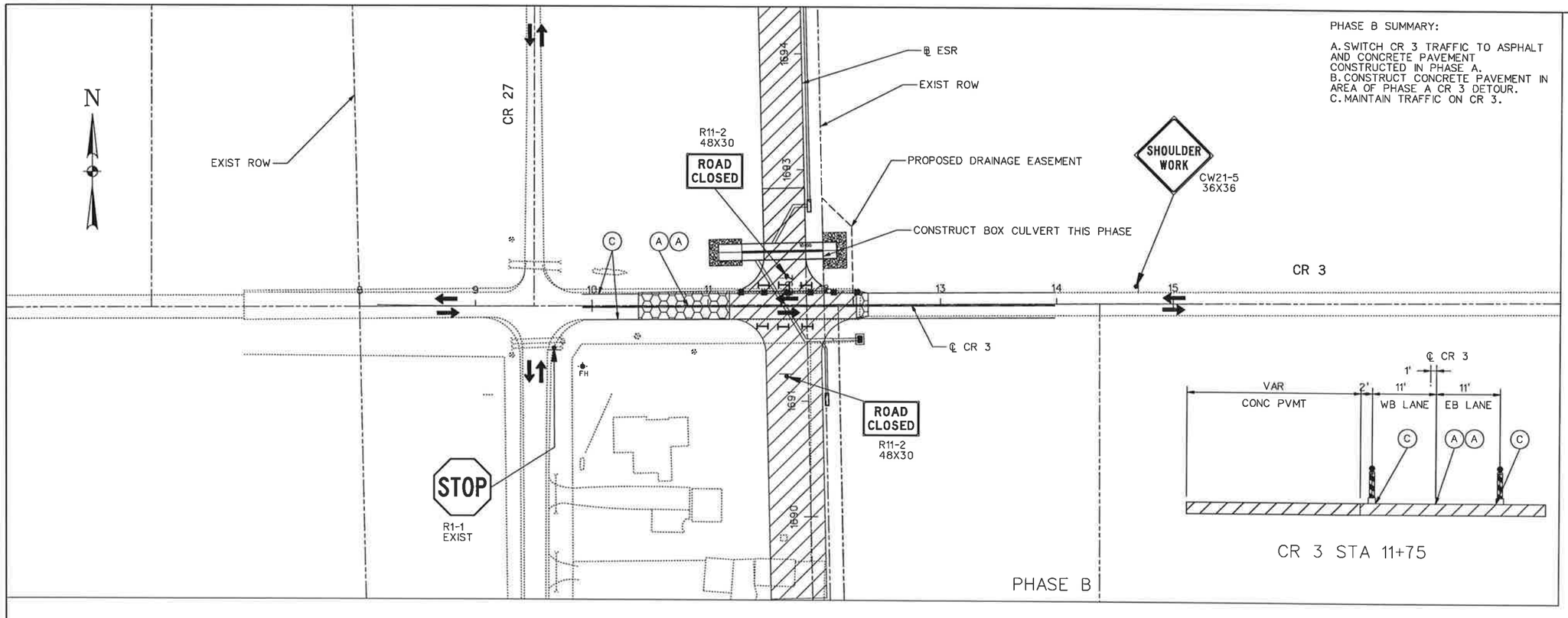

STATE OF TEXAS
GARY B. SAVANYU
84411
LICENSED PROFESSIONAL ENGINEER
12/28/2006

NO.	DATE	REVISION	APPROV.

DALLAS PARKWAY EXTENSION

COLLIN COUNTY

TRAFFIC CONTROL PLAN
CR 3

2 OF 2

Halff Associates, Inc.
ENGINEERS · ARCHITECTS · SCIENTISTS · PLANNERS · SURVEYORS

DRAWN GBS DATE DEC 2006
CHECKED DDS DATE
DESIGNED GBS DATE DEC 2006
SCALE 1"=100'

BOND PROJECT NO. 03-13 SHEET 23 OF 271

"CONSTRUCTION RECORD DRAWINGS_8-01-2009

N

EXIST ROW

CR 49

PROPOSED DRAINAGE EASEMENT

EXIST ROW

℄ ESR

1746

1745

1743

1742

℄ CR 4

PROSPER TRAIL (CR 4)

SHOULDER WORK
CW21-5
36X36

ROAD CLOSED
R11-2
48X30

ROAD CLOSED
R11-2
48X30

TEMPORARY GRADE TO DRAIN

PROPOSED DRAINAGE EASEMENT

DETOUR PAVEMENT CONSTRUCTION:

A. CONSTRUCT DETOUR PAVEMENT ON CR 4.
B. MAINTAIN TRAFFIC ON CR 4

12' WB LANE	12' EB LANE	VAR	24' TEMP PVMT	18'	VAR

1:3 MAX

1:3

TEMPORARY GRADE TO DRAIN

CR 4 EB STA 11+75

DETOUR PAVEMENT CONSTRUCTION

0 50 100 150 200
SCALE IN FEET

LEGEND

- CONC PVMT (THIS PHASE)
- CONC PVMT (PREVIOUS PHASES)
- D-GR HMA (THIS PHASE)
- D-GR HMA (PREVIOUS PHASES)
- TEMP PVMT (THIS PHASE)
- TEMP PVMT (PREVIOUS PHASES)
- TRAFFIC FLOW
- TY III BARRICADE
- TRAFFIC SIGN
- DELINEATION DEVICES (PLAN VIEW)
- DELINEATION DEVICES (SECTION VIEW)
- LOW PROF CON BARR (SECTION VIEW)
- LOW PROF CONC BARR (PLAN VIEW)
- (A) WK ZN PAV MRK REMOV (Y) 4" (SLD)
- (B) WK ZN PAV MRK NON-REMOV (Y) 4" (SLD)
- (C) WK ZN PAV MRK REMOV (W) 4" (SLD)
- (D) WK ZN PAV MRK NON-REMOV (W) 4" (SLD)
- (E) WK ZN PAV MRK REMOV (W) 8" (SLD)
- (F) WK ZN PAV MRK REMOV (W) 24" (SLD)
- (G) WK ZN PAV MRK REMOV (W) (ARROW)
- (H) WK ZN PAV MRK REMOV (W) (WORD)
- (I) EXIST PAV MRK
- (J) PERMANENT PAV MRK
- (K) PERMANENT TRAFFIC SIGN

STATE OF TEXAS
GARY B. SAVANYU
94417
LICENSED
PROFESSIONAL ENGINEER
12/28/2006

CONSTRUCTION RECORD DRAWINGS_8-01-2009

N

CR 49

CONSTRUCT NORTH PORTION OF BOX CULVERT THIS PHASE

PROPOSED DRAINAGE EASEMENT

EXIST ROW

℄ ESR

N 69°-08'-26" E

PC STA 8+68.14=
CR 4 STA 8+68.14
BEGIN DETOUR TCP-03

PC STA 12+80.62

℄ CR 4

PROSPER TRAIL (CR 4)

PT STA 13+69.26=
CR 4 STA 13+52.12 (20.50' LT)
END DETOUR TCP-03

CW1-4R
36X36

CW1-4L
36X36

25 M.P.H.
CW13-1
24X24

R11-2
48X30 ROAD CLOSED

ROAD CLOSED
R11-2
48X30

CURVE TCP-03-01
P.I. STA = 9+23.72
Δ = 25°-03'-57" (RT)
R = 250.00
T = 55.57
L = 109.37
CHORD = S 78°-00'-42" E
DIST. = 108.50

CURVE TCP-03-02
P.I. STA = 10+82.04
Δ = 45°-22'-52" (LT)
R = 250.00
T = 104.53
L = 198.01
CHORD = S 88°-10'-11" E
DIST. = 192.88

CURVE TCP-03-03
P.I. STA = 13+25.41
Δ = 20°-18'-55" (RT)
R = 250.00
T = 44.79
L = 88.64
CHORD = N 79°-17'-52" E
DIST. = 88.18

EXIST ROW

CURVE TCP-03-01

PRC STA 9+77.51

CURVE TCP-03-02

PT STA 11+75.53

CW1-4L
36X36

℄ DETOUR TCP-03

CURVE TCP-03-03

PROPOSED DRAINAGE EASEMENT

24' & VAR CONC PVMT	VAR	12' WB LANE	℄ DETOUR TCP-03 12' EB LANE

CONSTRUCT NORTH PORTION OF BOX CULVERT THIS PHASE

CR 4 STA 11+75

SEE GENERAL NOTES FOR TEMPORARY PAVEMENT COURSES

PHASE A

NO.	DATE	REVISION	APPROV.

DALLAS PARKWAY EXTENSION

COLLIN COUNTY

TRAFFIC CONTROL PLAN
CR 4
1 OF 2

Halff Associates, Inc.
ENGINEERS · ARCHITECTS · SCIENTISTS · PLANNERS · SURVEYORS

DRAWN	GBS	DATE	DEC 2006	DESIGNED	GBS	DATE	DEC 2006
CHECKED	DDS	DATE		SCALE	1"=100'		

BOND PROJECT NO. 03-13 SHEET 24 OF 271

P.200612-01

1:48:22 PM
I:\23000s\23819\FRISCO\DGN\23819TCP04.dgn

12/28/2006 1:48:22 PM

I:\23000s\23819\FRISCO\DGN\23819TCP05.dgn

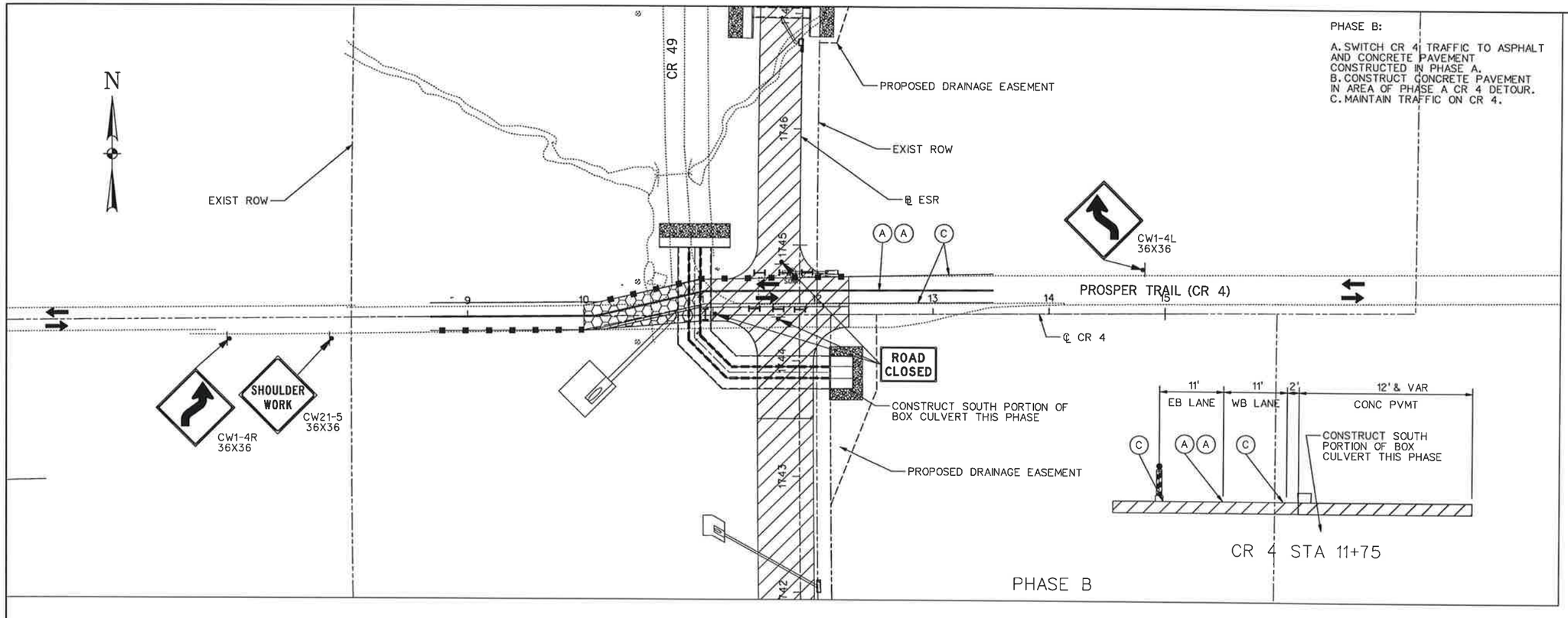

PHASE B:

A. SWITCH CR 4 TRAFFIC TO ASPHALT AND CONCRETE PAVEMENT CONSTRUCTED IN PHASE A.
B. CONSTRUCT CONCRETE PAVEMENT IN AREA OF PHASE A CR 4 DETOUR.
C. MAINTAIN TRAFFIC ON CR 4.

0 50 100 150 200
SCALE IN FEET

LEGEND

- CONC PVMT (THIS PHASE)
- CONC PVMT (PREVIOUS PHASES)
- D-GR HMA (THIS PHASE)
- D-GR HMA (PREVIOUS PHASES)
- TEMP PVMT (THIS PHASE)
- TEMP PVMT (PREVIOUS PHASES)
- TRAFFIC FLOW
- TY III BARRICADE
- TRAFFIC SIGN
- DELINEATION DEVICES (PLAN VIEW)
- DELINEATION DEVICES (SECTION VIEW)
- LOW PROF CON BARR (SECTION VIEW)
- LOW PROF CONC BARR (PLAN VIEW)
- (A) WK ZN PAV MRK REMOV (Y) 4" (SLD)
- (B) WK ZN PAV MRK NON-REMOV (Y) 4" (SLD)
- (C) WK ZN PAV MRK REMOV (W) 4" (SLD)
- (D) WK ZN PAV MRK NON-REMOV (W) 4" (SLD)
- (E) WK ZN PAV MRK REMOV (W) 8" (SLD)
- (F) WK ZN PAV MRK REMOV (W) 24" (SLD)
- (G) WK ZN PAV MRK REMOV (W) (ARROW)
- (H) WK ZN PAV MRK REMOV (W) (WORD)
- (I) EXIST PAV MRK
- (J) PERMANENT PAV MRK
- (K) PERMANENT TRAFFIC SIGN

STATE OF TEXAS
GARY B. SAVANYU
84417
LICENSED
PROFESSIONAL ENGINEER
12/28/2006

NO.	DATE	REVISION	APPROV.

DALLAS PARKWAY EXTENSION

COLLIN COUNTY

TRAFFIC CONTROL PLAN
CR 4

2 OF 2

Halff Associates, Inc.
ENGINEERS · ARCHITECTS · SCIENTISTS · PLANNERS · SURVEYORS

DRAWN GBS DATE DEC 2006 | DESIGNED GBS DATE DEC 2006
CHECKED DDS DATE _____ | SCALE 1"=100'

BOND PROJECT NO. 03-13 SHEET 25 OF 271

"CONSTRUCTION RECORD DRAWINGS_8-01-2009

2:01:05 PM
I:\23000s\23819\FRISCO\DGN\23819TCP05.dgn

12/28/2006 2:01:05 PM

R-200612-01

"CONSTRUCTION RECORD DRAWINGS_8-01-2009

I:\23000s\23819\FRISCO\DGN\23819TCP06.dgn

DETOUR PAVEMENT CONSTRUCTION:

A. CONSTRUCT DETOUR PAVEMENT ON CR 5.
B. MAINTAIN TRAFFIC ON CR 5

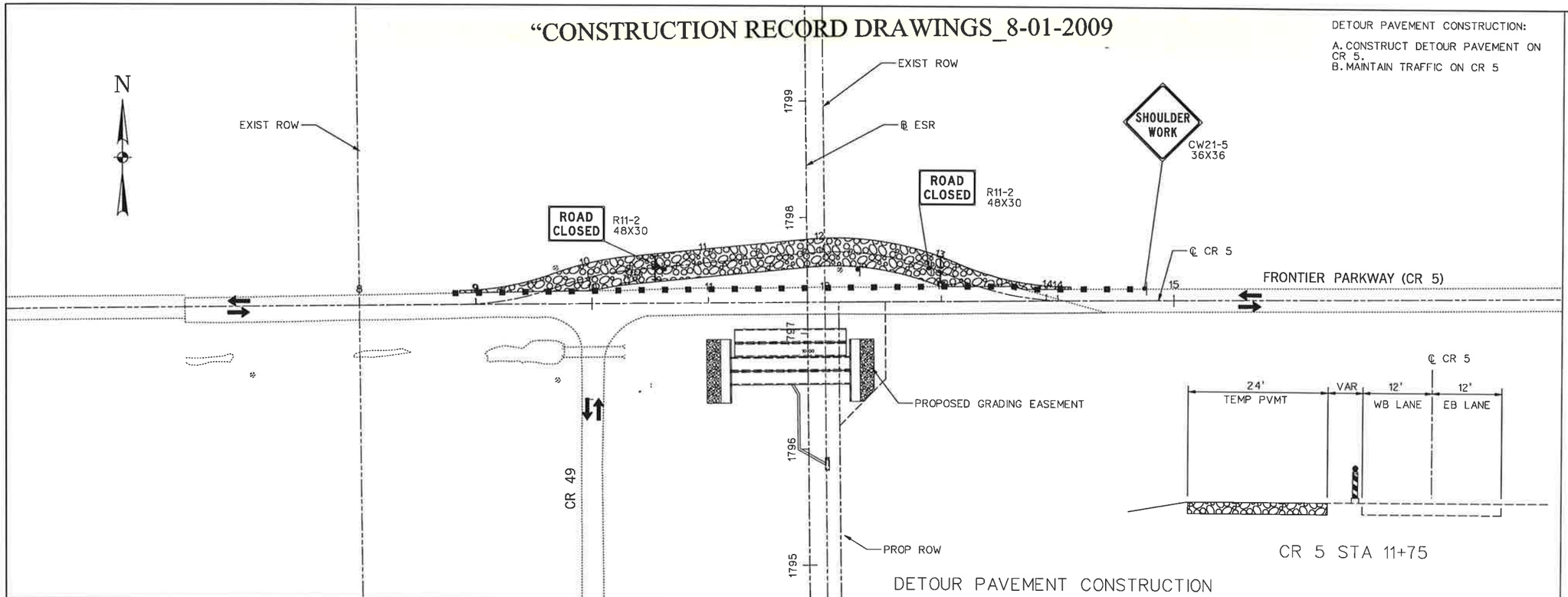

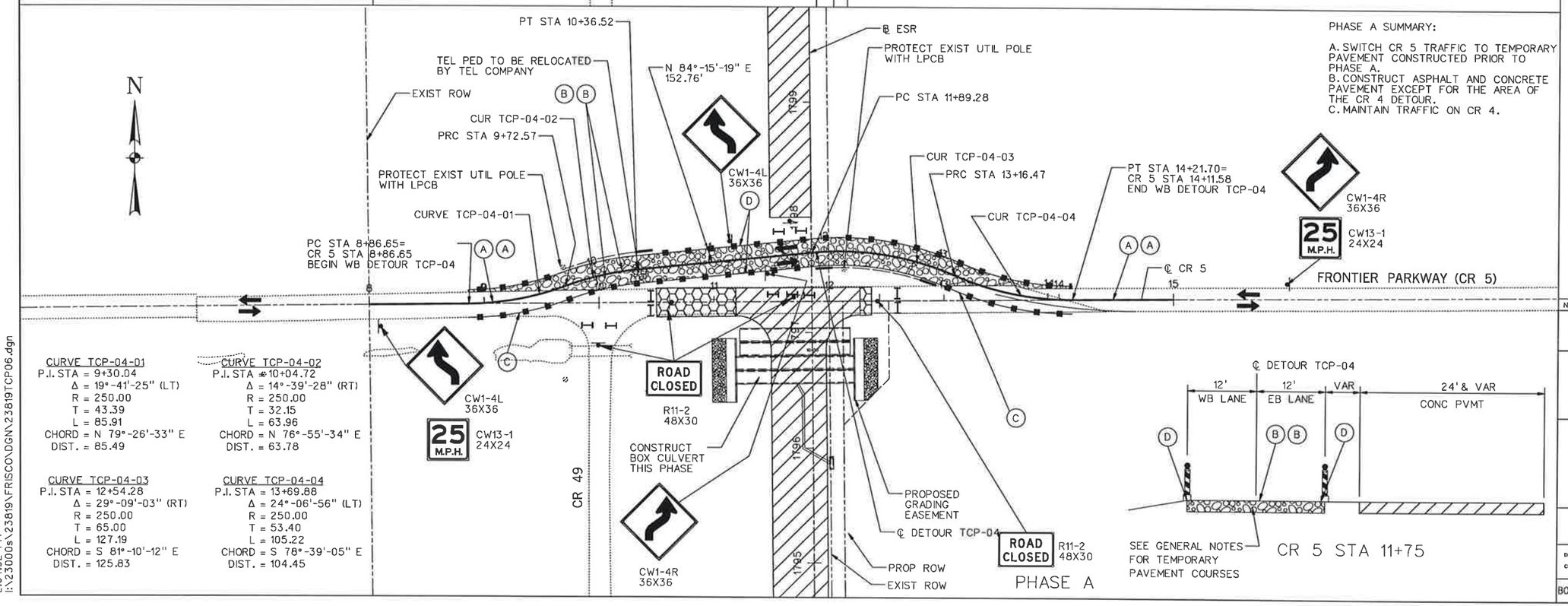

PHASE A SUMMARY:

A. SWITCH CR 5 TRAFFIC TO TEMPORARY PAVEMENT CONSTRUCTED PRIOR TO PHASE A.
B. CONSTRUCT ASPHALT AND CONCRETE PAVEMENT EXCEPT FOR THE AREA OF THE CR 4 DETOUR.
C. MAINTAIN TRAFFIC ON CR 4.

CURVE TCP-04-01
P.I. STA = 9+30.04
Δ = 19°-41'-25" (LT)
R = 250.00
T = 43.39
L = 85.91
CHORD = N 79°-26'-33" E
DIST. = 85.49

CURVE TCP-04-02
P.I. STA = 10+04.72
Δ = 14°-39'-28" (RT)
R = 250.00
T = 32.15
L = 63.96
CHORD = N 76°-55'-34" E
DIST. = 63.78

CURVE TCP-04-03
P.I. STA = 12+54.28
Δ = 29°-09'-03" (RT)
R = 250.00
T = 65.00
L = 127.19
CHORD = S 81°-10'-12" E
DIST. = 125.83

CURVE TCP-04-04
P.I. STA = 13+69.88
Δ = 24°-06'-56" (LT)
R = 250.00
T = 53.40
L = 105.22
CHORD = S 78°-39'-05" E
DIST. = 104.45

0 50 100 150 200
SCALE IN FEET

LEGEND

- CONC PVMT (THIS PHASE)
- CONC PVMT (PREVIOUS PHASES)
- D-GR HMA (THIS PHASE)
- D-GR HMA (PREVIOUS PHASES)
- TEMP PVMT (THIS PHASE)
- TEMP PVMT (PREVIOUS PHASES)
- TRAFFIC FLOW
- TY III BARRICADE
- TRAFFIC SIGN
- DELINEATION DEVICES (PLAN VIEW)
- DELINEATION DEVICES (SECTION VIEW)
- LOW PROF CON BARR (SECTION VIEW)
- LOW PROF CONC BARR (PLAN VIEW)
- (A) WK ZN PAV MRK REMOV (Y) 4" (SLD)
- (B) WK ZN PAV MRK NON-REMOV (Y) 4" (SLD)
- (C) WK ZN PAV MRK REMOV (W) 4" (SLD)
- (D) WK ZN PAV MRK NON-REMOV (W) 4" (SLD)
- (E) WK ZN PAV MRK REMOV (W) 8" (SLD)
- (F) WK ZN PAV MRK REMOV (W) 24" (SLD)
- (G) WK ZN PAV MRK REMOV (W) (ARROW)
- (H) WK ZN PAV MRK REMOV (W) (WORD)
- (I) EXIST PAV MRK
- (J) PERMANENT PAV MRK
- (K) PERMANENT TRAFFIC SIGN

STATE OF TEXAS
GARY B. SAVANYU
84411
LICENSED PROFESSIONAL ENGINEER
12/28/2006

NO.	DATE	REVISION	APPROV.

DALLAS PARKWAY EXTENSION

COLLIN COUNTY

TRAFFIC CONTROL PLAN
CR 5

1 OF 2

Halff Associates, Inc.
ENGINEERS · ARCHITECTS · SCIENTISTS · PLANNERS · SURVEYORS

DRAWN GBS DATE DEC 2006 | DESIGNED GBS DATE DEC 2006
CHECKED DDS DATE | SCALE 1"=100'

BOND PROJECT NO. 03-13 SHEET 26 OF 271

P-20061201

12/28/2006 2:04:32 PM
I:\23000s\23819\FRISCO\DGN\23819TCP06.dgn

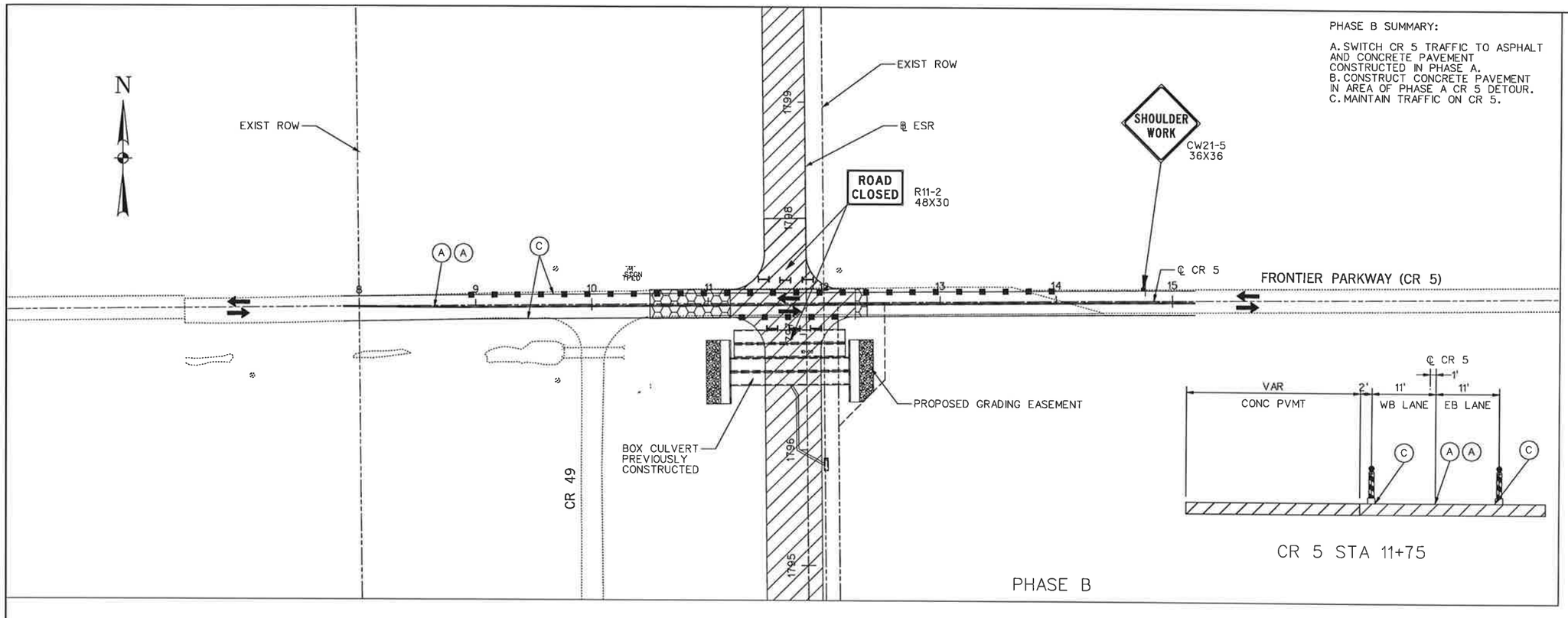

PHASE B SUMMARY:

A. SWITCH CR 5 TRAFFIC TO ASPHALT AND CONCRETE PAVEMENT CONSTRUCTED IN PHASE A.
B. CONSTRUCT CONCRETE PAVEMENT IN AREA OF PHASE A CR 5 DETOUR.
C. MAINTAIN TRAFFIC ON CR 5.

0 50 100 150 200
SCALE IN FEET

LEGEND

- CONC PVMT (THIS PHASE)
- CONC PVMT (PREVIOUS PHASES)
- D-GR HMA (THIS PHASE)
- D-GR HMA (PREVIOUS PHASES)
- TEMP PVMT (THIS PHASE)
- TEMP PVMT (PREVIOUS PHASES)
- TRAFFIC FLOW
- TY III BARRICADE
- TRAFFIC SIGN
- DELINEATION DEVICES (PLAN VIEW)
- DELINEATION DEVICES (SECTION VIEW)
- LOW PROF CON BARR (SECTION VIEW)
- LOW PROF CONC BARR (PLAN VIEW)
- (A) WK ZN PAV MRK REMOV (Y) 4" (SLD)
- (B) WK ZN PAV MRK NON-REMOV (Y) 4" (SLD)
- (C) WK ZN PAV MRK REMOV (W) 4" (SLD)
- (D) WK ZN PAV MRK NON-REMOV (W) 4" (SLD)
- (E) WK ZN PAV MRK REMOV (W) 8" (SLD)
- (F) WK ZN PAV MRK REMOV (W) 24" (SLD)
- (G) WK ZN PAV MRK REMOV (W) (ARROW)
- (H) WK ZN PAV MRK REMOV (W) (WORD)
- (I) EXIST PAV MRK
- (J) PERMANENT PAV MRK
- (K) PERMANENT TRAFFIC SIGN

STATE OF TEXAS
GARY B. SAVANYU
84111
LICENSED PROFESSIONAL ENGINEER
12/28/2006

NO.	DATE	REVISION	APPROV.

DALLAS PARKWAY EXTENSION

COLLIN COUNTY

TRAFFIC CONTROL PLAN
CR 5

2 OF 2

Halff Associates, Inc.
ENGINEERS · ARCHITECTS · SCIENTISTS · PLANNERS · SURVEYORS

DRAWN GBS DATE DEC 2006
CHECKED DDS DATE
DESIGNED GBS DATE DEC 2006
SCALE 1"=100'

BOND PROJECT NO. 03-13 SHEET 27 OF 271

"CONSTRUCTION RECORD DRAWINGS_8-01-2009

"CONSTRUCTION RECORD DRAWINGS_8-01-2009

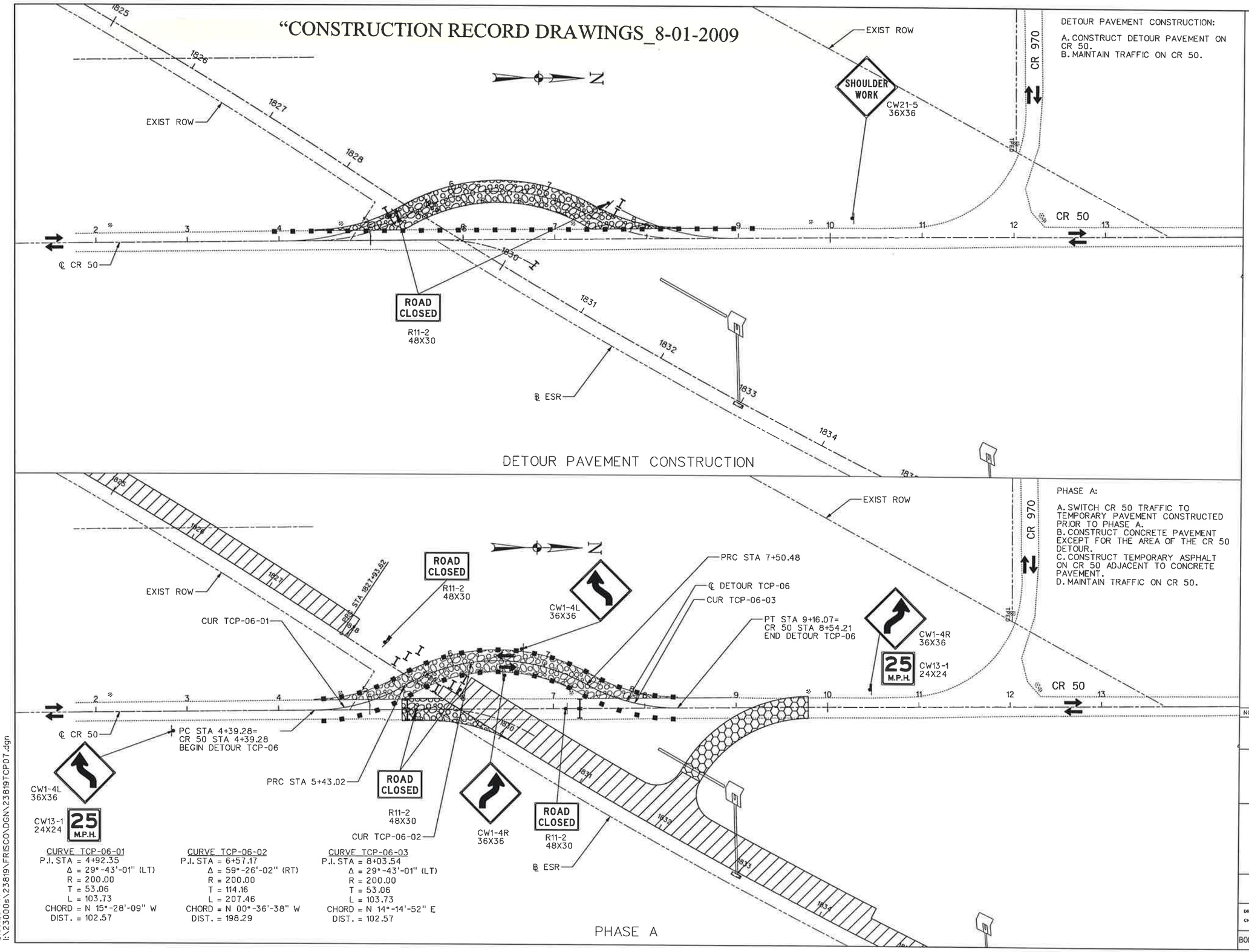

0 50 100 150 200
SCALE IN FEET

LEGEND

- CONC PVMT (THIS PHASE)
- CONC PVMT (PREVIOUS PHASES)
- D-GR HMA (THIS PHASE)
- D-GR HMA (PREVIOUS PHASES)
- TEMP PVMT (THIS PHASE)
- TEMP PVMT (PREVIOUS PHASES)
- TRAFFIC FLOW
- TY III BARRICADE
- TRAFFIC SIGN
- DELINEATION DEVICES (PLAN VIEW)
- DELINEATION DEVICES (SECTION VIEW)
- LOW PROF CON BARR (SECTION VIEW)
- LOW PROF CONC BARR (PLAN VIEW)
- (A) WK ZN PAV MRK REMOV (Y) 4" (SLD)
- (B) WK ZN PAV MRK NON-REMOV (Y) 4" (SLD)
- (C) WK ZN PAV MRK REMOV (W) 4" (SLD)
- (D) WK ZN PAV MRK NON-REMOV (W) 4" (SLD)
- (E) WK ZN PAV MRK REMOV (W) 8" (SLD)
- (F) WK ZN PAV MRK REMOV (W) 24" (SLD)
- (G) WK ZN PAV MRK REMOV (W) (ARROW)
- (H) WK ZN PAV MRK REMOV (W) (WORD)
- (I) EXIST PAV MRK
- (J) PERMANENT PAV MRK
- (K) PERMANENT TRAFFIC SIGN

STATE OF TEXAS
GARY B. SAVANYU
84411
LICENSED PROFESSIONAL ENGINEER
12/28/2006

NO.	DATE	REVISION	APPROV.

DALLAS PARKWAY EXTENSION

COLLIN COUNTY

TRAFFIC CONTROL PLAN
CR 50
1 OF 2

Halff Associates, Inc.
ENGINEERS · ARCHITECTS · SCIENTISTS · PLANNERS · SURVEYORS

DRAWN GBS DATE DEC 2006 | DESIGNED GBS DATE DEC 2006
CHECKED DDS DATE | SCALE 1"=100'

BOND PROJECT NO. 03-13 SHEET 28 OF 271

CURVE TCP-06-01
P.I. STA = 4+92.35
Δ = 29°-43'-01" (LT)
R = 200.00
T = 53.06
L = 103.73
CHORD = N 15°-28'-09" W
DIST. = 102.57

CURVE TCP-06-02
P.I. STA = 6+57.17
Δ = 59°-26'-02" (RT)
R = 200.00
T = 114.16
L = 207.46
CHORD = N 00°-36'-38" W
DIST. = 198.29

CURVE TCP-06-03
P.I. STA = 8+03.54
Δ = 29°-43'-01" (LT)
R = 200.00
T = 53.06
L = 103.73
CHORD = N 14°-14'-52" E
DIST. = 102.57

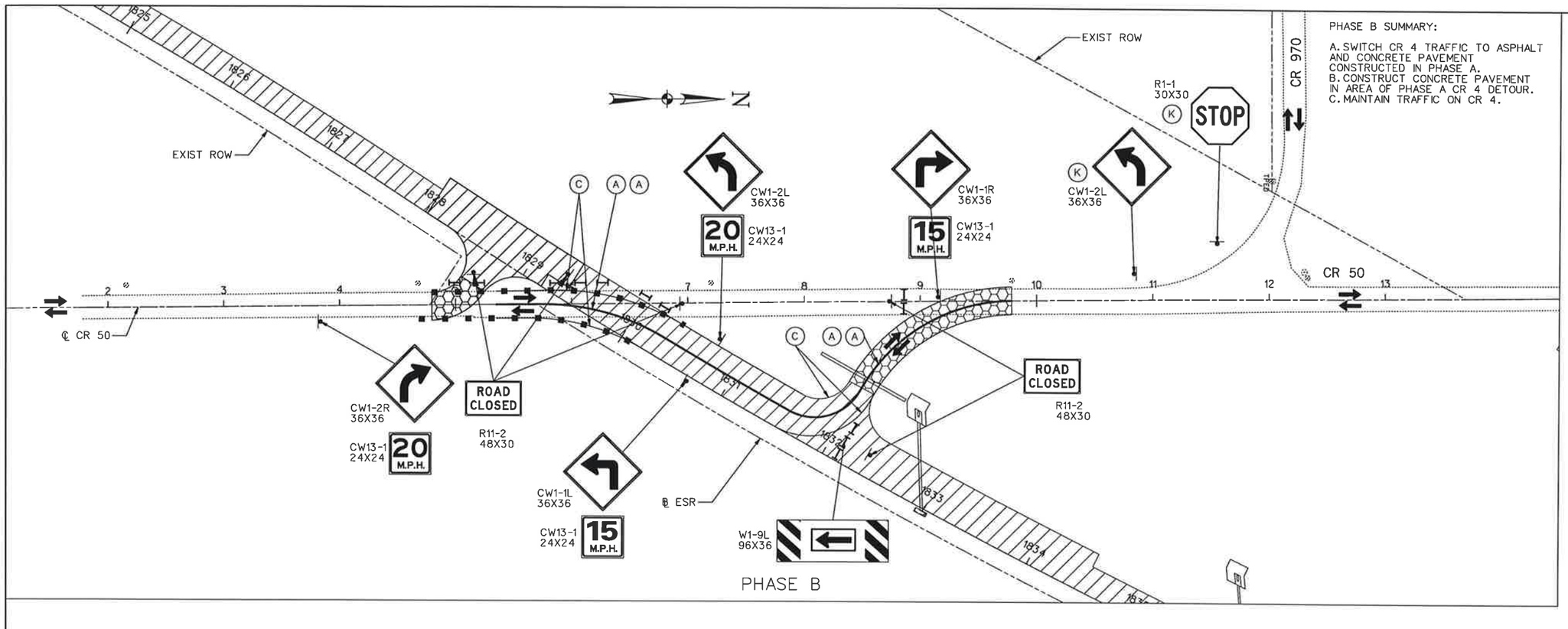

PHASE B SUMMARY:

A. SWITCH CR 4 TRAFFIC TO ASPHALT AND CONCRETE PAVEMENT CONSTRUCTED IN PHASE A.
B. CONSTRUCT CONCRETE PAVEMENT IN AREA OF PHASE A CR 4 DETOUR.
C. MAINTAIN TRAFFIC ON CR 4.

0 50 100 150 200
SCALE IN FEET

LEGEND

- CONC PVMT (THIS PHASE)
- CONC PVMT (PREVIOUS PHASES)
- D-GR HMA (THIS PHASE)
- D-GR HMA (PREVIOUS PHASES)
- TEMP PVMT (THIS PHASE)
- TEMP PVMT (PREVIOUS PHASES)
- TRAFFIC FLOW
- TY III BARRICADE
- TRAFFIC SIGN
- DELINEATION DEVICES (PLAN VIEW)
- DELINEATION DEVICES (SECTION VIEW)
- LOW PROF CON BARR (SECTION VIEW)
- LOW PROF CONC BARR (PLAN VIEW)
- (A) WK ZN PAV MRK REMOV (Y) 4" (SLD)
- (B) WK ZN PAV MRK NON-REMOV (Y) 4" (SLD)
- (C) WK ZN PAV MRK REMOV (W) 4" (SLD)
- (D) WK ZN PAV MRK NON-REMOV (W) 4" (SLD)
- (E) WK ZN PAV MRK REMOV (W) 8" (SLD)
- (F) WK ZN PAV MRK REMOV (W) 24" (SLD)
- (G) WK ZN PAV MRK REMOV (W) (ARROW)
- (H) WK ZN PAV MRK REMOV (W) (WORD)
- (I) EXIST PAV MRK
- (J) PERMANENT PAV MRK
- (K) PERMANENT TRAFFIC SIGN

STATE OF TEXAS
GARY B. SAVANYU
84411
LICENSED
PROFESSIONAL
12/28/2006

NO.	DATE	REVISION	APPROV.

DALLAS PARKWAY EXTENSION

COLL IN COUNTY

TRAFFIC CONTROL PLAN
CR 50
2 OF 2

Halff Associates, Inc.
ENGINEERS · ARCHITECTS · SCIENTISTS · PLANNERS · SURVEYORS

DRAWN GBS	DATE DEC 2006	DESIGNED GBS	DATE DEC 2006
CHECKED DDS	DATE	SCALE 1"=100'	

BOND PROJECT NO. 03-13 SHEET 29 OF 271

"CONSTRUCTION RECORD DRAWINGS_8-01-2009

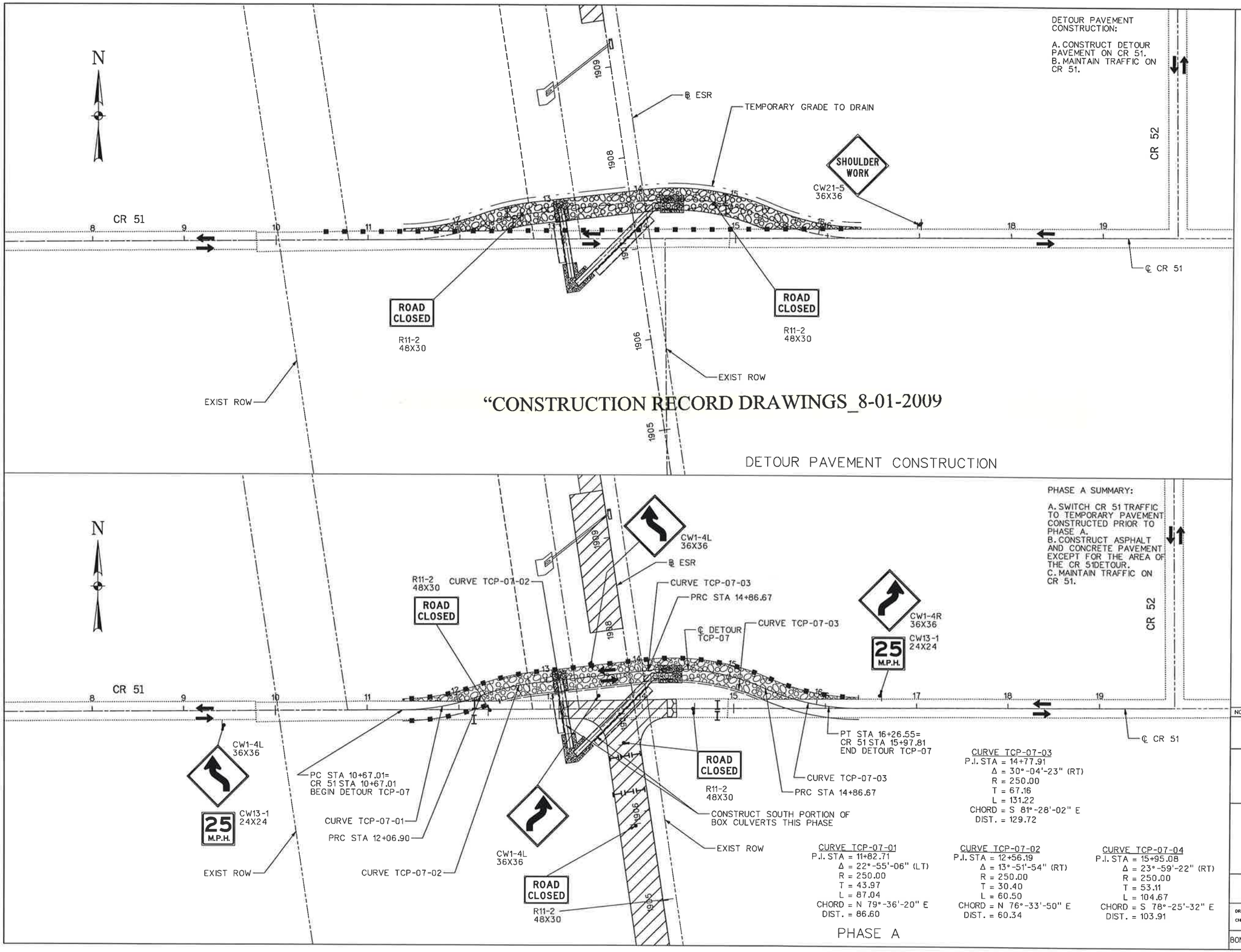

0 50 100 150 200
SCALE IN FEET

LEGEND

- CONC PVMT (THIS PHASE)
- CONC PVMT (PREVIOUS PHASES)
- D-GR HMA (THIS PHASE)
- D-GR HMA (PREVIOUS PHASES)
- TEMP PVMT (THIS PHASE)
- TEMP PVMT (PREVIOUS PHASES)
- TRAFFIC FLOW
- TY III BARRICADE
- TRAFFIC SIGN
- DELINEATION DEVICES (PLAN VIEW)
- DELINEATION DEVICES (SECTION VIEW)
- LOW PROF CON BARR (SECTION VIEW)
- LOW PROF CONC BARR (PLAN VIEW)
- (A) WK ZN PAV MRK REMOV (Y) 4" (SLD)
- (B) WK ZN PAV MRK NON-REMOV (Y) 4" (SLD)
- (C) WK ZN PAV MRK REMOV (W) 4" (SLD)
- (D) WK ZN PAV MRK NON-REMOV (W) 4" (SLD)
- (E) WK ZN PAV MRK REMOV (W) 8" (SLD)
- (F) WK ZN PAV MRK REMOV (W) 24" (SLD)
- (G) WK ZN PAV MRK REMOV (W) (ARROW)
- (H) WK ZN PAV MRK REMOV (W) (WORD)
- (I) EXIST PAV MRK
- (J) PERMANENT PAV MRK
- (K) PERMANENT TRAFFIC SIGN

STATE OF TEXAS
GARY B. SAVANYU
84411
LICENSED PROFESSIONAL ENGINEER
12/28/2006

NO.	DATE	REVISION	APPROV.

DALLAS PARKWAY EXTENSION

COLL. IN COUNTY

TRAFFIC CONTROL PLAN
CR 51

1 OF 2

Halff Associates, Inc.
ENGINEERS · ARCHITECTS · SCIENTISTS · PLANNERS · SURVEYORS

DRAWN GBS	DATE DEC 2006	DESIGNED GBS	DATE DEC 2006
CHECKED DDS	DATE	SCALE 1"=100'	

BOND PROJECT NO. 03-13 SHEET 30 OF 271

P-200612-01

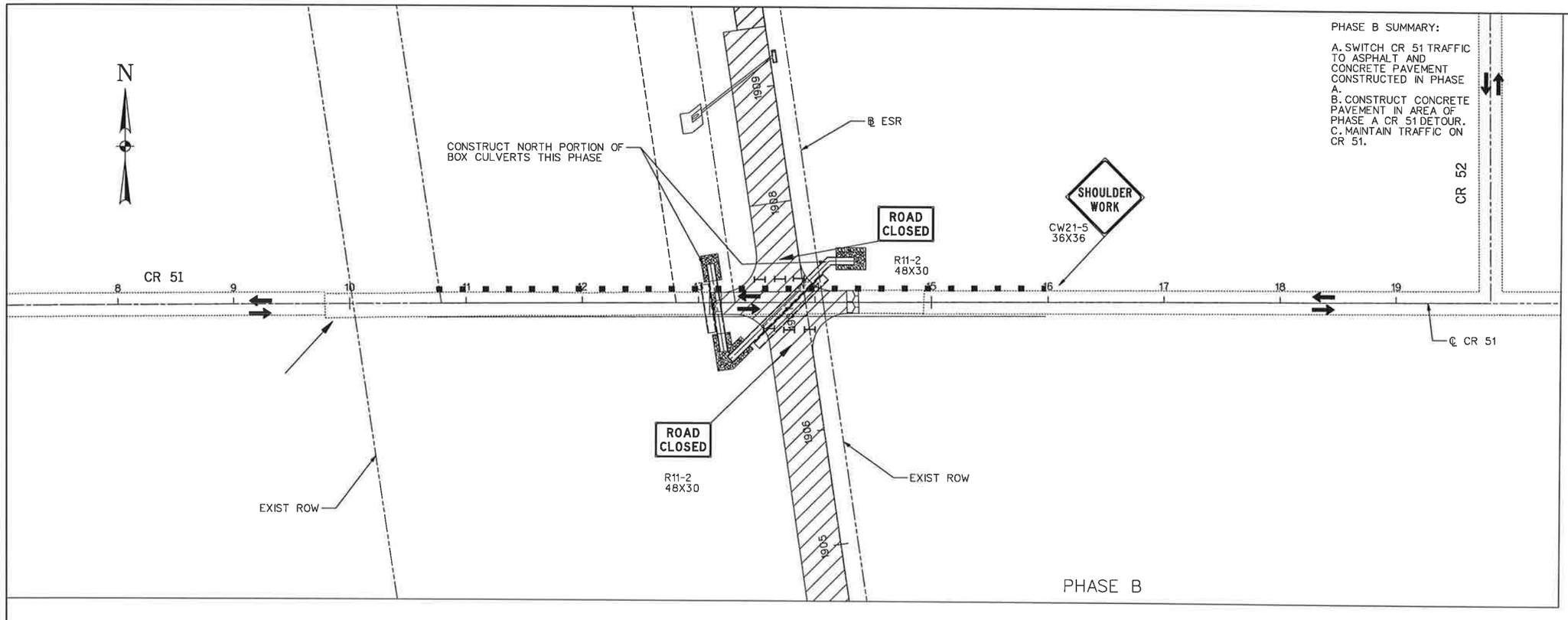

PHASE B SUMMARY:

A. SWITCH CR 51 TRAFFIC TO ASPHALT AND CONCRETE PAVEMENT CONSTRUCTED IN PHASE A.
B. CONSTRUCT CONCRETE PAVEMENT IN AREA OF PHASE A CR 51 DETOUR.
C. MAINTAIN TRAFFIC ON CR 51.

0 50 100 150 200
SCALE IN FEET

LEGEND

- CONC PVMT (THIS PHASE)
- CONC PVMT (PREVIOUS PHASES)
- D-GR HMA (THIS PHASE)
- D-GR HMA (PREVIOUS PHASES)
- TEMP PVMT (THIS PHASE)
- TEMP PVMT (PREVIOUS PHASES)
- TRAFFIC FLOW
- TY III BARRICADE
- TRAFFIC SIGN
- DELINEATION DEVICES (PLAN VIEW)
- DELINEATION DEVICES (SECTION VIEW)
- LOW PROF CON BARR (SECTION VIEW)
- LOW PROF CONC BARR (PLAN VIEW)
- (A) WK ZN PAV MRK REMOV (Y) 4" (SLD)
- (B) WK ZN PAV MRK NON-REMOV (Y) 4" (SLD)
- (C) WK ZN PAV MRK REMOV (W) 4" (SLD)
- (D) WK ZN PAV MRK NON-REMOV (W) 4" (SLD)
- (E) WK ZN PAV MRK REMOV (W) 8" (SLD)
- (F) WK ZN PAV MRK REMOV (W) 24" (SLD)
- (G) WK ZN PAV MRK REMOV (W) (ARROW)
- (H) WK ZN PAV MRK REMOV (W) (WORD)
- (I) EXIST PAV MRK
- (J) PERMANENT PAV MRK
- (K) PERMANENT TRAFFIC SIGN

STATE OF TEXAS
GARY B. SAVANYU
84411
LICENSED PROFESSIONAL ENGINEER
12/28/2006

NO.	DATE	REVISION	APPROV.

DALLAS PARKWAY EXTENSION

COLLIN COUNTY

TRAFFIC CONTROL PLAN
CR 51
2 OF 2

Halff Associates, Inc.
ENGINEERS · ARCHITECTS · SCIENTISTS · PLANNERS · SURVEYORS

DRAWN GBS DATE DEC 2006
CHECKED DDS DATE
DESIGNED GBS DATE DEC 2006
SCALE 1"=100'

BOND PROJECT NO. 03-13 SHEET 31 OF 271

P-200612-01

"CONSTRUCTION RECORD DRAWINGS_8-01-2009

i:\23000s\23819\frisco\dgn\23819tcp10.dgn

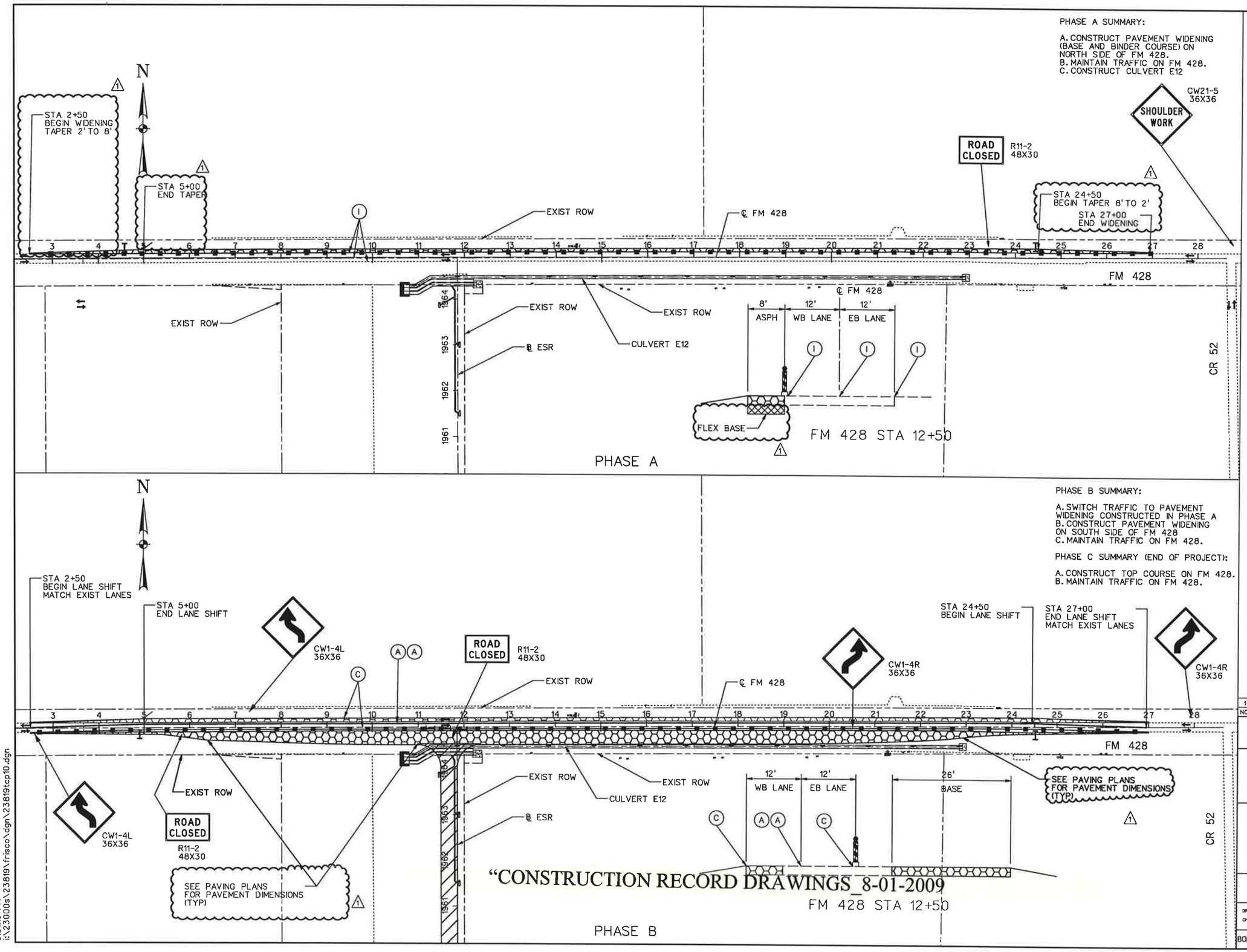

0 100 200 300 400
SCALE IN FEET

LEGEND

- CONC PVMT (THIS PHASE)
- CONC PVMT (PREVIOUS PHASES)
- D-GR HMA (THIS PHASE)
- D-GR HMA (PREVIOUS PHASES)
- TEMP PVMT (THIS PHASE)
- TEMP PVMT (PREVIOUS PHASES)
- TRAFFIC FLOW
- TY III BARRICADE
- TRAFFIC SIGN
- DELINEATION DEVICES (PLAN VIEW)
- DELINEATION DEVICES (SECTION VIEW)
- LOW PROF CON BARR (SECTION VIEW)
- LOW PROF CONC BARR (PLAN VIEW)
- (A) WK ZN PAV MRK REMOV (Y) 4" (SLD)
- (B) WK ZN PAV MRK NON-REMOV (Y) 4" (SLD)
- (C) WK ZN PAV MRK REMOV (W) 4" (SLD)
- (D) WK ZN PAV MRK NON-REMOV (W) 4" (SLD)
- (E) WK ZN PAV MRK REMOV (W) 8" (SLD)
- (F) WK ZN PAV MRK REMOV (W) 24" (SLD)
- (G) WK ZN PAV MRK REMOV (W) (ARROW)
- (H) WK ZN PAV MRK REMOV (W) (WORD)
- (I) EXIST PAV MRK
- (J) PERMANENT PAV MRK
- (K) PERMANENT TRAFFIC SIGN

STATE OF TEXAS
CARY B. SAVANYU
84411
LICENSED PROFESSIONAL ENGINEER
03/30/2007

NO.	DATE	REVISION	APPROV.
1	3/30/07	TxDOT DRIVEWAY PERMIT - C.O. #1	SAVANYU

DALLAS PARKWAY EXTENSION

COLLIN COUNTY

TRAFFIC CONTROL PLAN
FM 428
1 OF 1

Halff Associates, Inc.
ENGINEERS · ARCHITECTS · SCIENTISTS · PLANNERS · SURVEYORS

DRAWN GBS	DATE DEC 2006	DESIGNED GBS	DATE DEC 2006
CHECKED DDS	DATE	SCALE 1"=200'	

BOND PROJECT NO. 03-13 SHEET 32 OF 271

3:31:16 PM
i:\23000s\23819\frisco\dgn\23819tcp10.dgn

3/30/2007 3:31:16 PM

P-200612-01

DISCLAIMER
The use of this standard is governed by the "Texas Engineering Practice Act". No warranty of any kind is made by TxDOT for any purpose whatsoever. TxDOT assumes no responsibility for the conversion of this standard to other formats or for incorrect results or damages resulting from its use.

CLOSED ROADWAY

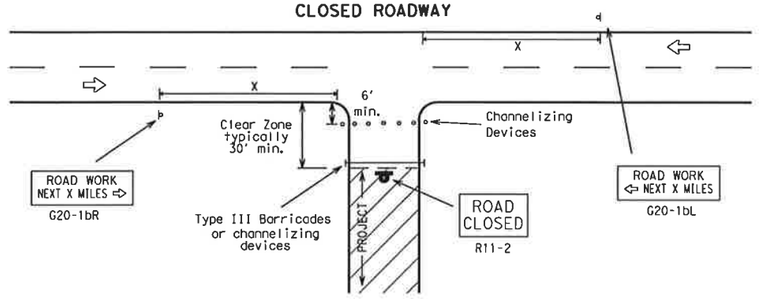

Barricades or channelizing devices shall be erected completely across roadway. Drums, vertical panels or cones shall be used in place of Type III Barricades when shown in plans or as specified by the Engineer.

T-INTERSECTION

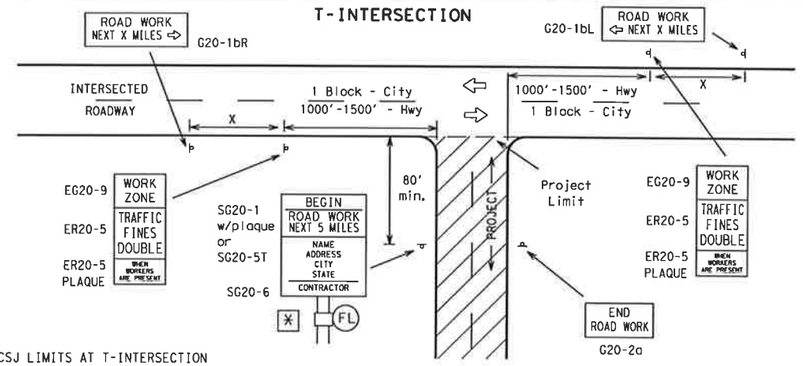

CSJ LIMITS AT T-INTERSECTION

1. A ROAD WORK NEXT X MILES (G20-1bR(L)) sign should be erected on the intersected highway as shown above.
2. The Engineer will determine the types and location of any additional traffic control devices, such as a flagger and accompanying signs, or other signs, that should be used when work is being performed at or near an intersection.
3. The Engineer/Inspector shall ensure that construction work zone signs are installed with adequate spacing between the signs so the legibility of existing permanent and other work zone signs is not obstructed.

TYPICAL LOCATION OF CROSSROAD SIGNS

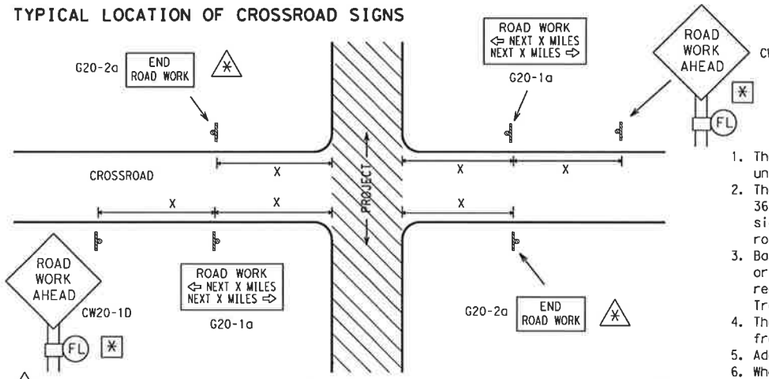

(*) May be mounted on back of CW20-1D sign with approval of engineer. (See note 2 at right)

1. The typical minimum signing on a crossroad approach should be a CW20-1D ROAD WORK AHEAD sign and a G20-2a END ROAD WORK sign, unless noted otherwise in plans.
2. The Engineer may use the reduced size 36" x 36" ROAD WORK AHEAD (MCW20-1D) sign mounted back to back with the reduced size 36" x 18" END ROAD WORK (SG20-2a) sign on low volume crossroads. See the "Standard Highway Sign Designs for Texas" manual for sign details. The Engineer may omit the advance warning signs on low volume crossroads. The Engineer will determine whether a road is low volume. This information shall be shown in the plans.
3. Based on existing field conditions, the Engineer/Inspector may require additional signs such as FLAGGER AHEAD, LOOSE GRAVEL, or other appropriate signs. When additional signs are required, these signs will be considered part of the minimum requirements. The Engineer/Inspector will determine the proper location and spacing of any sign not shown on the BC sheets, Traffic Control Plan sheets or the Work Zone Standard Sheets.
4. The G20-1a sign shall be required on major crossroads to advise motorists of the length of construction in either direction from the intersection. The Engineer will determine whether a roadway is considered high volume.
5. Additional traffic control devices may be shown elsewhere in the plans for higher volume crossroads.
6. When work occurs in the intersection area, appropriate traffic control devices, as shown elsewhere in the plans or as determined by the Engineer/Inspector, shall be in place.

TYPICAL CONSTRUCTION WARNING SIGN SIZE AND SPACING [1,5,6]

Posted Speed	Sign Spacing "X" △	Long-term Or Intermediate-term Stationary Approach Warning Signs CW20 and CW21 Series		Short-term Stationary Or Short Duration Approach Warning Signs CW21 Series		Other Warning Signs
MPH	Feet (Apprx.)	Standard inches	Minimum [4] inches	Standard inches [7]	Minimum [4] inches [7]	Standard inches [7]
30	120	48 x 48	36 x 36	30 x 30 or 36 x 36	24 x 24 or 30 x 30	30 x 30 or 36 x 36
35	160					
40	240					
45	320		Use Standard Size		Use Standard Size	
50	400					
55	500 [2]					
60	600 [2]			48 x 48		48 x 48
65	700 [2]					
70	800 [2]					
75	900 [2]					
*	* [3]					

(*) For typical sign spacings on expressways and freeways, see Part VI of the "Texas Manual on Uniform Traffic Control Devices" (TMUTCD) typical application diagrams or TCP Standard Sheets.
(△) Minimum distance from work area to first Advance Warning sign and/or distance between each additional sign.

General Notes:
1. Special or larger size signs may be used as necessary.
2. Distance between signs should be increased as required to have 1500 feet advance warning.
3. Distance between signs should be increased as required to have ½ mile or more advance warning.
4. For use only on secondary roads or city streets where speeds are low.
5. Only diamond shaped warning sign sizes are indicated.
6. See sign size listing in "TMUTCD", Appendix A or the "Standard Highway Sign Design" manual for complete list of available sign design sizes.
7. Where two sizes are listed, see sign size listing in "TMUTCD", Appendix A or the "Standard Highway Sign Design" manual for proper size.

Only pre-qualified products shall be used. A copy of the "Compliant Work Zone Traffic Control Devices List" (CWZTCD) describes pre-qualified products and their sources and may be obtained by contacting:

Standards Engineer
Traffic Operations Division - TE
Texas Department of Transportation
125 East 11th Street
Austin, Texas 78701-2483
Phone (512) 416-3120
Fax (512) 416-3299

Instructions to locate the "CWZTCD" on TxDOT website are:

Start at website - www.dot.state.tx.us
Click on "About TxDOT",
Click on "Organizational Chart",
Click on Traffic Operations Box,
Click on "Compliant Work Zone Traffic Control Devices",
Click on "View PDF".
This site is printable.

TYPICAL SIGNING AND TRAFFIC CONTROL DEVICE DETAILS FOR WORK BEGINNING AT THE CSJ LIMITS

(Less than 2000 feet between project limits and work area) (Typical signing shall be installed at all CSJ Limits)

TYPICAL DETAILS FOR WORK AREAS IN VARIOUS LOCATION WITHIN CSJ LIMITS

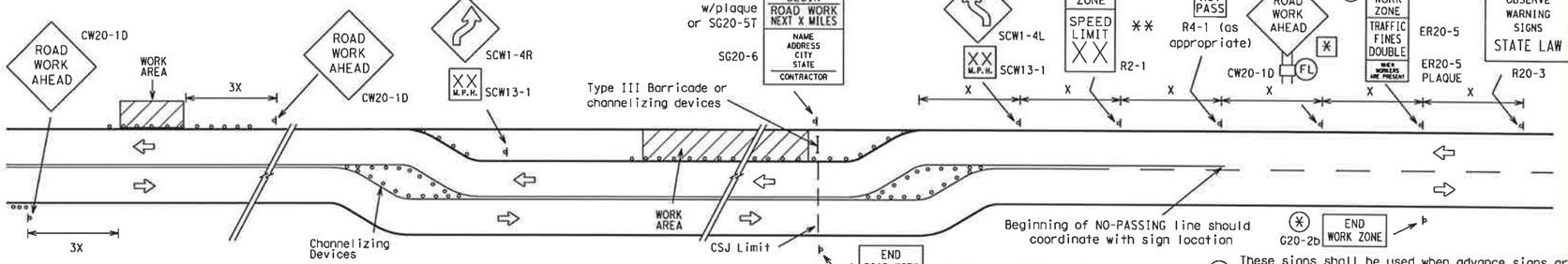

When extended distances occur between minimal work areas, the Engineer/Inspector should ensure additional Road Work Ahead (CW20-1D) signs are placed in advance of these work areas to remind drivers they are still within the project limits. See the applicable TCP sheets for exact location and spacing of signs and channelizing devices.

(**) For additional information on the placement of work zone speed limit signs, refer to BC(3)

(*) These signs shall be used when advance signs are required outside the CSJ Limits. They inform the motorist of entering or leaving a work zone where traffic fines may double if workers are present.

TYPICAL DETAIL FOR PROJECT LIMIT AWAY FROM WORK AREA

(Greater than 2000 feet between project limits and work area) (Typical signing shall be installed at all CSJ Limits)

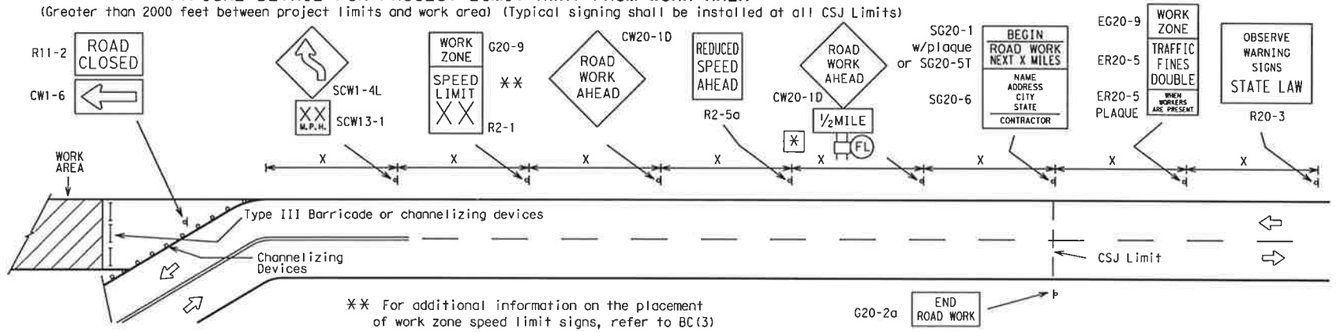

(**) For additional information on the placement of work zone speed limit signs, refer to BC(3)

LEGEND

- Sign
- (FL) Flashing Type A-Low Intensity Warning Light
- O O Channelizing Devices
- Type III Barricade
- (*) The Type A Warning Lights shall not be used with signs manufactured with Type E Sheeting (Fluorescent Prismatic) meeting the requirements of Departmental Material Specification DMS-8300.
- X See Typical Construction Warning Sign Size and Spacing chart or the TMUTCD for sign spacing requirements.

STANDARD PLANS
TEXAS DEPARTMENT OF TRANSPORTATION
Traffic Operations Division

BARRICADE AND CONSTRUCTION PROJECT LIMIT STANDARD

2 of 12 BC(2)-03

© TxDOT 11-4-02	DN: BAS	CK: GRB	DW: FDN	CK: CAL
REVISIONS	STATE DISTRICT: 6	FEDERAL REGION	FEDERAL AID PROJECT	SHEET: 33
	COUNTY	CONTROL	SECTION	JOB / HIGHWAY

ACC: LEVELS DISPLAYED 1 2 3 4 5 6 7 8 9 10 11 12 13 14 15 16 17 18 19 20 21 22 23 24 25 26 27 28 29 30 31 32 33 34 35 36 37 38 39 40 41 42 43 44 45 46 47 48 49 50 51 52 53 54 55 56 57 58 59 60 61 62 63

"CONSTRUCTION RECORD DRAWINGS 8-01-2009"

P-200612-01

DISCLAIMER
The use of this standard is governed by the "Texas Engineering Practice Act". No warranty of any kind is made by TxDOT for any purpose whatsoever. TxDOT assumes no responsibility for the conversion of this standard to other formats or for incorrect results or damages resulting from its use.

TYPICAL MINIMUM CLEARANCES FOR LONG TERM AND INTERMEDIATE TERM SIGNS

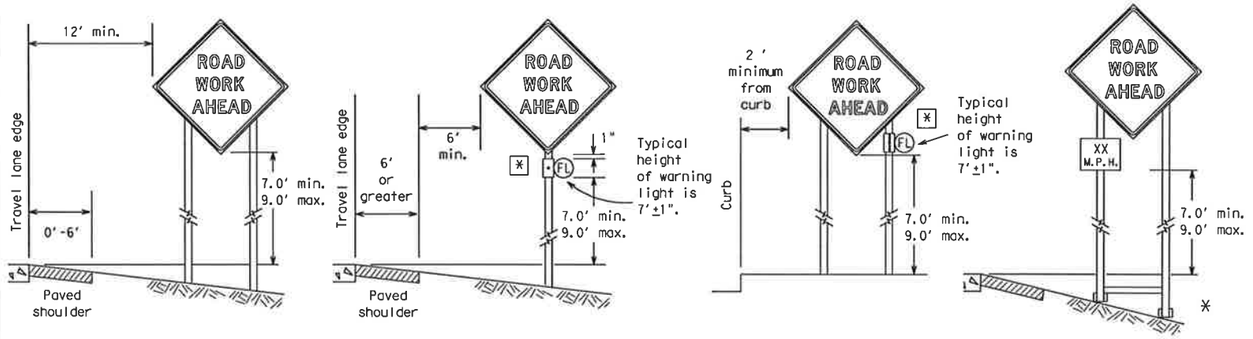

It is the intent of these plans to provide positive guidance to motorists throughout the project limits by the use of signs, pavement markings, delineation and/or channelizing devices. All traffic control devices shall conform with the "Texas Manual on Uniform Traffic Control Devices for Streets and Highways" (TMUTCD) and the "Compliant Work Zone Traffic Control Devices List" list (CWZTCD).

* When placing skid supports on unlevel ground, the leg post lengths must be adjusted so the sign appears straight and plumb. Objects shall NOT be placed under skids as a means of leveling.

~~"CONSTRUCTION RECORD DRAWINGS_8-01-2009~~

ATTACHMENT FOR WOODEN SIGN SUPPORTS

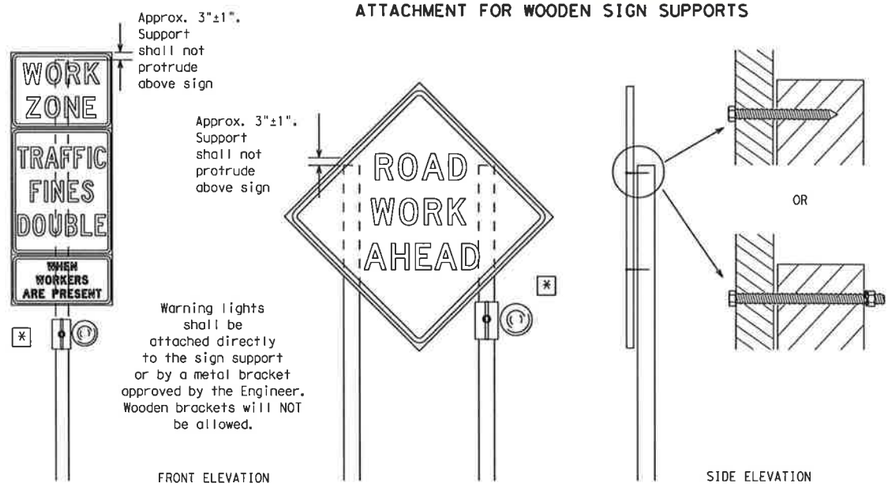

Attachment to wooden supports will be by bolts and nuts or screws. Use TxDOT's or manufacturer's recommended procedures for attaching sign substrates to other types of sign supports

Nails will NOT be allowed.

Each sign shall be attached directly to the sign support. Multiple signs shall not be joined or spliced by any means. Supports shall not be extended or repaired by splicing or other means.

Only pre-qualified products shall be used. A copy of the "Compliant Work Zone Traffic Control Devices List" (CWZTCD) describes pre-qualified products and their sources and may be obtained by contacting:

Standards Engineer
Traffic Operations Division - TE
Texas Department of Transportation
125 East 11th Street
Austin, Texas 78701-2483
Phone (512) 416-3120
Fax (512) 416-3299

Instructions to locate the "CWZTCD" on TxDOT website are:

Start at website - www.dot.state.tx.us
Click on "About TxDOT",
Click on "Organizational Chart",
Click on Traffic Operations Box,
Click on "Compliant Work Zone Traffic Control Devices",
Click on "View PDF".
This site is printable.

(FL) Flashing Type A - Low Intensity Warning Light

* The Type A Warning lights shall not be used with Type E Sheeting (Fluorescent Prismatic) meeting the requirements of DMS-8300.

CONTRACTOR REQUIREMENTS FOR MAINTAINING PERMANENT SIGNS WITHIN THE PROJECT LIMITS

1. Permanent signs are used to give notice of traffic laws or regulations, call attention to conditions that are potentially hazardous to traffic operations, show route designations, destinations, directions, distances, services, points of interest, and other geographical, recreational, or cultural information. Drivers proceeding through a work zone need the same, if not better route guidance as normally installed on a roadway without construction.
2. When permanent regulatory or warning signs conflict with work zone conditions, remove or cover the permanent signs until the permanent sign message matches the roadway condition.
3. When existing permanent signs are moved and relocated due to construction purposes, they shall be visible to motorists at all times.
4. If existing signs are to be relocated on their original supports, they shall be installed on crashworthy bases as shown on the SMD Standard sheets. The signs shall meet the required mounting heights shown on the BC Sheets or the SMD Standards. This work should be paid for under the appropriate pay item for relocating existing signs.
5. If permanent signs are to be removed and relocated using temporary supports, the Contractor shall use crashworthy supports as shown on the BC sheets or the CWZTCD. The signs shall meet the required mounting heights shown on the BC Sheets or the SMD Standards during construction. This work should be paid for under the appropriate pay item for relocating existing signs.
6. Any sign or traffic control device that is struck or damaged by the Contractor or his/her construction equipment shall be replaced as soon as possible by the Contractor to ensure proper guidance for the motorists. This will be subsidiary to Item 502.

GENERAL NOTES FOR WORK ZONE SIGNS
1. Contractor shall install and maintain signs in a straight and plumb condition and/or as directed by the Engineer.
2. Wooden sign posts shall be painted white.
3. Barricades shall NOT be used as sign supports.
4. Nails shall NOT be used to attach signs to any support.
5. All signs shall be installed in accordance with the plans or as directed by the Engineer. Signs shall be used to regulate, warn, and guide the traveling public safely through the work zone.
6. The Contractor may furnish either the sign design shown in the plans or in the "Standard Highway Sign Designs for Texas" (SHSD). The Engineer/Inspector may require the Contractor to furnish other work zone signs that are shown in the TMUTCD but may have been omitted from the plans. Any variation in the plans shall be documented by written agreement between the Engineer and the Contractor's Responsible Person. All changes must be documented in writing before being implemented. This can include documenting the changes in the Inspector's TxDOT diary and having both the Inspector and Contractor initial and date the agreed upon changes. The additional signs requested by the Engineer/Inspector shall not be subsidiary.
7. The Contractor shall furnish sign supports listed in the "Compliant Work Zone Traffic Control Device List" (CWZTCD). The Contractor shall install the sign support in accordance with the manufacturer's recommendations. If there is a question regarding installation procedures, the Contractor shall furnish the Engineer a copy of the manufacturer's installation recommendations so that the Engineer can verify the correct procedures are being followed.
8. The contractor is responsible for sign installations and replacing signs with damaged or cracked substrates and/or damaged or marred reflective sheeting as directed by the Engineer/Inspector.
9. Identification markings may be shown only on the back of the sign substrate. The maximum height of letters and/or company logos used for identification shall be 1".
10. The Contractor shall replace damaged wood posts. New or damaged wood sign posts shall not be spliced.

Duration of Work (as defined by the "Texas Manual on Uniform Traffic Control Devices" Part VI)
1. The types of sign supports, the size of signs, and the type of sign substrates can vary based on the type of work being performed. The Engineer is responsible for selecting the appropriate size sign for the type of work being performed. The Contractor is responsible for ensuring that the sign support and substrate meets crashworthiness and length of work requirements.
   a. Long-term stationary - work that occupies a location more than 3 days.
   b. Intermediate-term stationary - work that occupies a location from overnight to 3 days.
   c. Short-term stationary - daytime work that occupies a location from 1 to 12 hours.
   d. Short, duration - work that occupies a location up to 1 hour.
   e. Mobile - work that moves intermittently or continuously. Does not stop for more than 15 minutes at a time.

SIGN MOUNTING HEIGHT
1. The bottom of Long-term/Intermediate-term signs shall be at least 7 feet, but not more than 9 feet, above the paved surface.
2. The bottom of Short-term/Short Duration signs shall be a minimum of 1 foot above the pavement surface but no more than 2 feet above the ground.
3. Long-term/Intermediate-term Signs may be used in lieu of Short-term/Short Duration signing.
4. Short-term/Short Duration signs shall be used only during daylight and shall be removed at the end of the workday.
5. Regulatory signs shall be mounted at least 7 feet, but not more than 9.0 feet, above the paved surface regardless of work duration.

SIZE OF SIGNS
1. The Engineer may allow the use of smaller size construction warning signs on secondary roads or city streets where speeds are low if the sign size is listed as an option on the "Typical Construction Warning Sign Size and Spacing" chart shown on BC(2).
2. The Contractor shall furnish the sign sizes shown in plans, the BC Sheets, the TCP sheets or as directed by the Engineer.

SIGN SUBSTRATES
1. The Contractor shall ensure that the sign substrate is allowed for the type of sign support that is being used. The CWZTCD lists each substrate that can be used on the different types and models of sign supports.
2. "Mesh" type materials are NOT an approved sign substrate.
3. All wooden individual sign panels fabricated from 2 or more pieces shall have one or more plywood cleat, 1/2" thick by 6" wide, fastened to the back of the sign and extending fully across the sign. The cleat shall be attached to the back of the sign using wood screws that do not penetrate the face of the sign panel. The screws shall be placed on both sides of the splice and spaced at 6" centers. The Engineer may approve other methods of splicing the sign faces.

REFLECTIVE SHEETING
1. Reflectorized signs shall be constructed of sheeting meeting the color and retro-reflectivity requirements of DMS-8300 or DMS-8310. The DMS specifications can be accessed from the following web address: http://manuals.dot.state.tx.us:80/dynaweb/colmates/@Generic__CollectionView;cs=default;ts=default
2. White sheeting, meeting the requirements of DMS-8300 Type C (High Specific Intensity), shall be used for signs with white background and channelizing devices.
3. Orange sheeting, meeting the requirements of DMS-8300 Type E (Fluorescent Prismatic), shall be used for signs with orange backgrounds.

SIGN LETTERS
1. All sign letters and numbers shall be clear, and open rounded type uppercase alphabet letters as approved by the Federal Highway Administration (FHWA) and as published in the "Standard Highway Sign Design for Texas" manual. Signs, letters and numbers shall be of first class workmanship in accordance with Department Standards and Specifications.

REMOVING OR COVERING
1. When sign messages may be confusing or do not apply, the signs shall be removed or completely covered.
2. Long-term stationary or intermediate stationary signs installed on square metal tubing may be turned away from traffic 90 degrees when the sign message is not applicable. This type of sign support meets the crashworthiness standards regardless of the direction of impact. This technique may not be used for signs installed in the median of divided highways or near any intersections where the sign may be seen from approaching traffic.
3. Signs installed on skids shall not be turned at 90 degree angles to the roadway. These signs should be removed or completely covered when not required.
4. When signs are covered, the material used shall be opaque, such as heavy mil black plastic.
5. Burlap shall NOT be used to cover signs.
6. Duct tape or other adhesive material shall NOT be affixed to a sign face. These materials can damage the retroreflectivity of sign sheeting.
7. Signs shall be removed upon completion of the work.

SIGN SUPPORT WEIGHTS
1. Where sign supports require the use of weights to keep from turning over, the use of sandbags with dry, cohesionless sand is recommended.
2. The sandbags will be tied shut to keep the sand from spilling and to maintain a constant weight.
3. Rock, concrete, iron, steel or other solid objects will not be permitted for use as sign support weights.
4. Sandbags should weigh a minimum of 35 lbs and a maximum of 50 lbs.
5. Sandbags shall be made of a durable material that tears upon vehicular impact.
6. Rubber (such as tire inner tubes) shall NOT be used for sandbags.
7. Rubber ballasts (such as those used with cones or edgeline channelizers) shall NOT be used as sign support weights.
8. Sandbags shall only be placed along or laid over the base supports of the traffic control device and shall not be suspended above ground level or hung with rope, wire, chains or other fasteners. Sandbags shall be placed along the length of the skids to weigh down the sign support.
9. Sandbags shall NOT be placed under the skid and shall not be used to level sign supports placed on slopes.

STANDARD PLANS
Texas Department of Transportation
Traffic Operations Division

BARRICADE AND CONSTRUCTION TEMPORARY SIGN NOTES STANDARD

4 of 12 BC(4)-03

© TxDOT 11-4-02	DN: - BAS	CK: - GRB	DW: - FDN	CK: - CAL
REVISIONS	STATE DISTRICT	FEDERAL REGION	FEDERAL AID PROJECT	SHEET
		6		34
	COUNTY	CONTROL	SECTION	JOB	HIGHWAY

ACC:
LEVELS DISPLAYED
1 2 3 4 5 6 7 8 9 10 11 12 13 14 15 16
17 18 19 20 21 22 23 24 25 26 27 28 29 30 31 32
33 34 35 36 37 38 39 40 41 42 43 44 45 46 47 48
49 50 51 52 53 54 55 56 57 58 59 60 61 62 63

P-200612-01

DISCLAIMER
The use of this standard is governed by the "Texas Engineering Practice Act". No warranty of any kind is made by TxDOT for any purpose whatsoever. TxDOT assumes no responsibility for the conversion of this standard to other formats or for incorrect results or damages resulting from its use.

EXAMPLES OF SKID MOUNTED SIGN SUPPORTS

LONG/INTERMEDIATE TERM STATIONARY - PORTABLE SKID MOUNTED SIGN SUPPORTS □

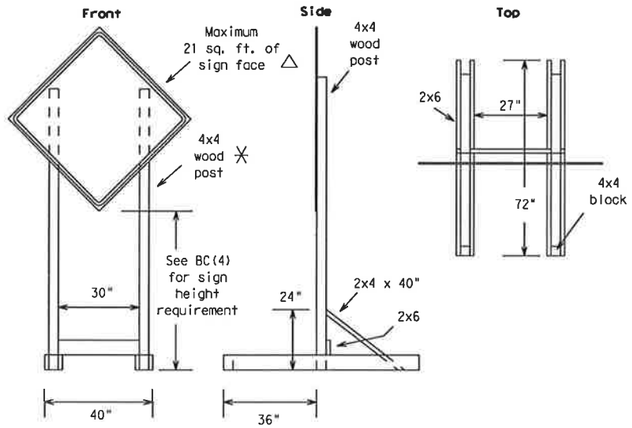

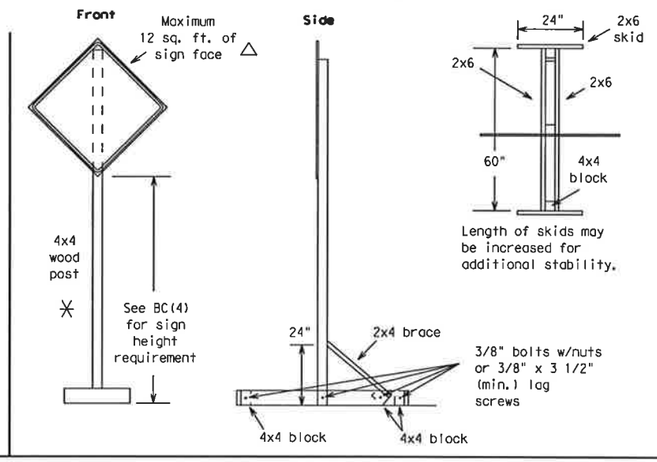

SHORT TERM STATIONARY/SHORT DURATION - PORTABLE SIGN SUPPORTS □

For Daytime use only.
1 Foot Mounting Height

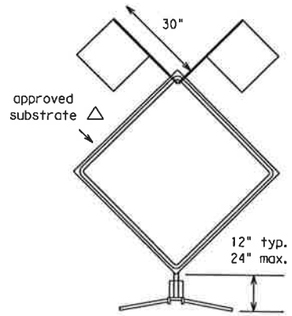

Flags as required by Engineer or as shown on plans

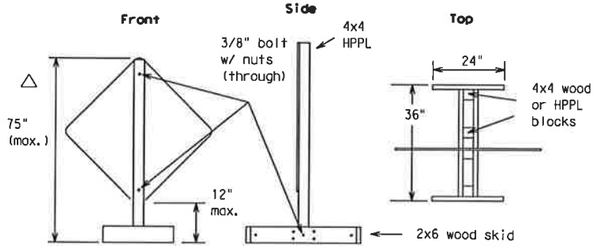

The upright SHALL be made of hollow-profile plastic lumber (HPPL). Wood or metal shall NOT be used.

EXAMPLES OF GROUND MOUNTED SIGN SUPPORTS

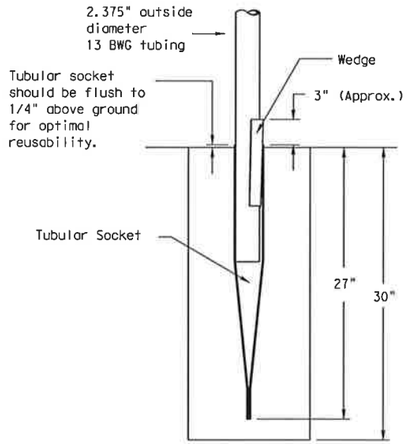

WEDGE ANCHOR SYSTEM WITH THIN-WALL TUBE

The wedge anchor system with thin wall tubing may be used to support up to 10 sq. ft. of sign area.

Where solid rock is encountered at ground level, the foundation shall be a minimum depth of 18 inches. When solid rock is encountered below ground level, the foundation shall extend in the solid rock a minimum depth of 18 inches or provide a minimum foundation depth of 30 inches. If solid rock is encountered, the socket/stub may be reduced in length as required to a min. length of 18 inches. Any material removed from the socket/stub shall be from the bottom and the clearance requirements shown above must still be adhered to. The inner surfaces of the socket/stub must remain free of debris.
Install Wedge Anchor System per manufacturer recommendations.
Attach the sign to the sign post.
Insert the sign post into the socket and align the sign face with the roadway.
Drive the wedge into the socket to secure post. This will leave approximately 3 inches of the wedge exposed.

Supports shall be straight within 1/4 inch per 5 feet of length and shall have a smooth, uniform finish free from defects affecting strength or appearance. Any bolt holes and sheared ends shall be free from burrs.

WING CHANNEL

Lap-splice/base bolted anchor

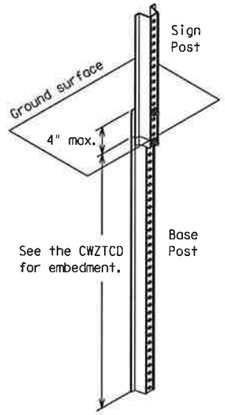

PERFORATED SQUARE METAL TUBING

With Anchor

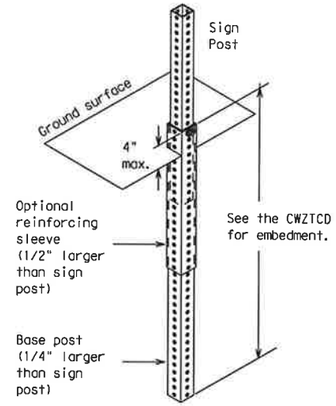

Refer to the CWZTCD and the manufacturer's installation procedure for each type sign support.
The maximum sign square footage shall adhere to the manufacturer's recommendation. Two post installations can be used for larger signs.

Only pre-qualified products shall be used. A copy of the "Compliant Work Zone Traffic Control Devices List" (CWZTCD) describes pre-qualified products and their sources and may be obtained by contacting:

Standards Engineer
Traffic Operations Division - TE
Texas Department of Transportation
125 East 11th Street
Austin, Texas 78701-2483
Phone (512) 416-3120
Fax (512) 416-3299

Instructions to locate the "CWZTCD" on TxDOT website are:

Start at website - www.dot.state.tx.us
Click on "About TxDOT",
Click on "Organizational Chart",
Click on Traffic Operations Box,
Click on "Compliant Work Zone Traffic Control Devices",
Click on "View PDF".
This site is printable.

"CONSTRUCTION RECORD DRAWINGS_8-01-2009

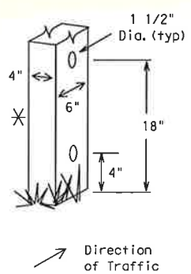

WOOD POST SYSTEM FOR GROUND MOUNTED SIGN SUPPORTS

Nominal Post Size	No. of Posts	Maximum Sq. feet of Sign Face	Minimum Soil Embedment	Drilled Hole(s) Required
4 x 4	1	12	36"	NO
4 x 4	2	21	36"	NO
4 x 6	1	21	36"	YES
4 x 6	2	36	36"	YES

No more than 2 sign posts shall be mounted within a 7 ft. circle.

When project is completed, all sign supports and foundations shall be removed from the project site. This will be considered subsidiary to Item 502.

□ See BC(4) for definition of "Work Duration."

✳ Sign posts MUST be one piece. Splicing will NOT be allowed. Posts shall be painted white.

△ See the CWZTCD for the type of sign substrate that can be used for each approved sign support.

STANDARD PLANS
Texas Department of Transportation
Traffic Operations Division

BARRICADE AND CONSTRUCTION TYPICAL SIGN SUPPORT STANDARD

5 of 12 BC(5)-03

© TxDOT 11-4-02	DN: - JWT	CK: - GRB	DW: - FDN	CK: - CAL
REVISIONS	STATE DISTRICT: 6	FEDERAL REGION	FEDERAL AID PROJECT	SHEET: 35
	COUNTY	CONTROL	SECTION	JOB / HIGHWAY

LEVELS DISPLAYED
1 2 3 4 5 6 7 8 9 10 11 12 13 14 15 16 17 18 19 20 21 22 23 24 25 26 27 28 29 30 31 32 33 34 35 36 37 38 39 40 41 42 43 44 45 46 47 48 49 50 51 52 53 54 55 56 57 58 59 60 61 62 63

ACC:

P-200612-01

DISCLAIMER
The use of this standard is governed by the "Texas Engineering Practice Act". No warranty of any kind is made by TxDOT for any purpose whatsoever. TxDOT assumes no responsibility for the conversion of this standard to other formats or for incorrect results or damages resulting from its use.

PORTABLE CHANGEABLE MESSAGE SIGNS

1. The Engineer/Inspector shall approve all messages used on portable changeable message signs (PCMS).
2. PCMS placed on the shoulder or within the R-O-W, but are not behind a concrete traffic barrier shall have a minimum of four plastic drums placed perpendicular to traffic, on the upstream side of the PCMS.
3. Messages on PCMS should contain no more than 8 words (four to eight characters per word), not including simple words such as "TO," "FOR," "AT," etc.
4. Messages should consist of a single phase, or two phases that alternate. Three-phase messages are not allowed.
5. Each phase of the message should convey a single thought.
6. Use the word "EXIT" to refer to an exit ramp on a freeway; i.e., "EXIT CLOSED." Do not use the term "RAMP."
7. Always use the route or interstate designation (IH, US, SH, FM) along with the number when referring to a roadway.
8. Specify the actual days of the week; e.g., TUES THROUGH FRI or TUES-FRI in the coming week that work activity will occur.
9. The message term "WEEKEND" should be used only if the work is to start on Saturday morning and end by Sunday evening at midnight. Actual days and hours of work should be displayed on the PCMS if work is to begin on Friday evening and/or continue into Monday morning.
10. The Engineer/Inspector may select one of two options which are available for displaying a two-phase message on a PCMS. Each phase may be displayed for either four seconds each or for two seconds each.
11. Do not "flash" messages or words included in a message. The message should be steady burn or continuous while displayed.
12. Do not present redundant information on a two-phase message; i.e., keeping two lines of the message the same and changing the third line.
13. Do not use the words "Danger" or "Caution" in message.
14. Do not display the message "LANES SHIFT LEFT" or "LANES SHIFT RIGHT" on a PCMS. Drivers do not understand the message.
15. Do not display messages that scroll horizontally or vertically across the face of the sign.
16. The following table lists abbreviated words and two-word phrases that are acceptable for use on a PCMS. Both words in a phrase must be displayed together. Words or phrases not on this list should not be abbreviated.

Word or Phrase	Abbreviation	Word or Phrase	Abbreviation
Access Road	ACCES RD	Miles	MI
Air Quality	AIR QLTY	Miles Per Hour	MPH
Avenue	AVE	Time Minutes	Time MIN
Best Route	BEST RTE	Monday	MON
Boulevard	BLVD	Normal	NORM
Bridge	BRDG	North	N
Cannot	CANT	Parking	PKING
Center	CNTR	Parking Lot	PRK LOT
Construction Ahead	CONST AHEAD	Road	RD
Detour Route	DETOUR RTE	Right Lane	RGT LN
East	E	Saturday	SAT
Emergency	EMER	Service Road	SERV RD
Emergency Vehicle	EMER VEH	Shoulder	SHLDR
Entrance, Enter	ENT	Slippery	SLIP
Express Lanes	EXP LANE	South	S
Expressway	EXPWY	Speed	SPD
Distance Feet	Distance FT	Street	ST
Fog Ahead	FOG AHD	Sunday	SUN
Freeway	FRWY, FWY	Telephone	PHONE
Freeway Blocked	FWY BLKD	Thursday	THURS
Friday	FRI	To Downtown	TO DWNTN
Hazardous Driving	HAZ DRIVING	Traffic	TRAF
Highway	HWY	Travelers	TRVLRS
Hours	HR	Tuesday	TUES
Information	INFO	Turnpike	Name TRNPK
Left	LFT	Upper Level	UPPR LVL
Left Lane	LFT LN	Warning	WARN
Lane Closed	LN CLSD	Wednesday	WED
Lower Level	LOWR LVL	Weight Limit	WT LIMIT
Maintenance	MAINT	Wet Pavement	WET PVMT
Roadway designation #	IH-number, US-number, SH-number, FM-number	West	W

WHEN NOT IN USE, REMOVE THE PCMS FROM THE RIGHT-OF-WAY OR PLACE THE PCMS BEHIND CONCRETE TRAFFIC BARRIER.

TYPICAL FLASHING ARROW PANEL

1. The Flashing Arrow Panel should be used for all lane closures on multi-lane roadways, or slow moving maintenance or construction activities on the travel lanes.
2. Flashing Arrow Panels should not be used on two-lane, two-way roadways, detours, diversions or work on shoulders unless the "CAUTION" display (see detail below) is used.
3. The Engineer/Inspector shall choose all appropriate signs, barricades and/or other traffic control devices that should be used in conjunction with the Flashing Arrow Panel.
4. The Flashing Arrow Panel should be able to display the following symbols:

Flashing RIGHT (LEFT) ARROW

Flashing DOUBLE ARROW

Flashing CAUTION

5. The "CAUTION" display consists of four corner lamps flashing simultaneously.
6. The straight line caution display is NOT ALLOWED.
7. The Flashing Arrow Panel shall be capable of minimum 50 percent dimming from rated lamp voltage. The flashing rate of the lamps shall not be less than 25 nor more than 40 flashes per minute.
8. Minimum lamp "on time" shall be approximately 50 percent for the flashing arrow and equal intervals of 25 percent for each sequential phase of the flashing chevron.
9. The sequential arrow display is NOT ALLOWED.
10. The flashing arrow display is the TxDOT standard; however, the sequential Chevron display may be used during daylight operations.

11. The Flashing Arrow Panel shall be mounted on a vehicle, trailer or other suitable support.
12. A Flashing Arrow Panel SHOULD NOT BE USED to laterally shift all lanes of traffic on a multi-lane roadway at once.

REQUIREMENTS

TYPE	MINIMUM SIZE	MINIMUM NUMBER OF PANEL LAMPS	MINIMUM VISIBILITY DISTANCE
B	30 x 60	13	3/4 mile
C	48 x 96	15	1 mile

ATTENTION: Flashing Arrow Panels shall be equipped with automatic dimming devices.

WHEN NOT IN USE, REMOVE THE ARROW PANEL FROM THE RIGHT-OF-WAY OR PLACE THE ARROW PANEL BEHIND CONCRETE TRAFFIC BARRIER.

TYPE C DELINEATORS FOR CONCRETE TRAFFIC BARRIER AND ATTENUATORS

1. Type C Delineators shall be prequalified, and conform to the color and reflectivity requirements of DMS-8600. A list of prequalified Type C Delineators can be found at the following Web site: ftp://ftp.dot.state.tx.us/pub/txdot-info/gsd/pdf/dms8600preq.pdf.
2. Color of delineators shall be as specified in the "Texas Manual on Uniform Traffic Control Devices" (TMUTCD). The cost of the Type C Delineators shall be considered subsidiary to Item 502.

CONCRETE TRAFFIC BARRIER (CTB)

3. Two (2) Type C Delineators should be mounted on each section of CTB in approximately the midsection of the CTB. The Type C Delineator on the side of the CTB shall be installed directly below the Type C Delineator mounted on top of the CTB.
4. Maximum spacing of Type C Delineators is 40 feet.
5. Pavement markers or temporary flexible-reflective roadway marker tabs shall NOT be used as CTB delineation.
6. Attach Type C Delineators on CTB as per manufacturer's recommendations.
7. Missing or damaged Type C Delineators shall be replaced as directed by the Engineer.

LOW PROFILE CONCRETE BARRIER (LPCB)

Max. spacing of Type C Delineators is 20 feet. Attach the Type C Delineators as per manufacturer's recommendations.

DELINEATION OF END TREATMENTS

	APPROACHING TRAFFIC	
	BOTH SIDES	ONE SIDE
DELINEATION	OM-1	OM-3 or Vertical Panel

Attach the Type C Delineators as per manufacturer's recommendations.

WARNING LIGHTS

1. Warning lights shall meet the requirements of the TMUTCD.
2. Warning lights shall NOT be installed on barricades.
3. Type A-Low Intensity Flashing Warning Lights are commonly used with signs. They are intended to warn of an approaching potentially hazardous area. Their use shall be as indicated on this sheet and/or other sheets of the plans by the designation " FL". The Type A Warning Lights shall not be used with signs manufactured with Type E Sheeting (Fluorescent Prismatic) meeting the requirements of Departmental Material Specification DMS-8300.
4. Type-C Steady Burn Lights are intended to be used in a series for delineation to supplement other traffic control devices. Their use shall be as indicated on this sheet and/or other sheets of the plans by the designation " SB ".
5. The Engineer/Inspector or the plans shall specify the location and type of warning lights to be installed on the traffic control devices.
6. When required by the Engineer, the Contractor shall furnish a copy of the warning lights certification. The warning light manufacturer will certify the warning lights meet the requirements of the latest ITE Purchase Specifications for Flashing and Steady-Burn Warning Lights.

END TREATMENTS FOR CTB'S USED IN WORK ZONES

End treatments used on CTB's in work zones shall meet crashworthy standards as defined in the National Cooperative Highway Research Report 350. Refer to the CWZTCD List for approved end treatments and manufacturers.

Only pre-qualified products shall be used. A copy of the "Compliant Work Zone Traffic Control Devices List" (CWZTCD) describes pre-qualified products and their sources and may be obtained by contacting:

Standards Engineer
Traffic Operations Division - TE
Texas Department of Transportation
125 East 11th Street
Austin, Texas 78701-2483
Phone (512) 416-3120
Fax (512) 416-3299

Instructions to locate the "CWZTCD" on TxDOT website are:

Start at website - www.dot.state.tx.us
Click on "About TxDOT",
Click on "Organizational Chart",
Click on Traffic Operations Box,
Click on "Compliant Work Zone Traffic Control Devices",
Click on "View PDF".
This site is printable.

"CONSTRUCTION RECORD DRAWINGS_8-01-2009

TRUCK-MOUNTED ATTENUATORS

1. Truck-mounted attenuators (TMA) used on TxDOT facilities must meet the requirements outlined in the National Cooperative Highway Research Report No. 350 (NCHRP 350).
2. Refer to the CWZTCD for the requirements of Level 2 or Level 3 TMAs.
3. Refer to the dates shown in the CWZTCD to ensure that the TMA meets the age requirements and the crashworthiness criteria established by the Federal Highway Administration (FHWA) for TMAs.
4. Refer to the CWZTCD for a list of approved TMAs.
5. TMAs are required on freeways unless otherwise noted in the plans.
6. A TMA should be used anytime that it can be positioned approximately 100 feet or less in advance of the area of crew exposure without adversely affecting the work performance.
7. The only reason a TMA should not be required is when a work area is spread down the roadway and the work crew is an extended distance from the TMA.

STANDARD PLANS
Texas Department of Transportation
Traffic Operations Division

BARRICADE AND CONSTRUCTION ARROW & MESSAGE SIGNS, REFLECTORS & WARNING LIGHT STANDARD

6 of 12 BC(6)-03

©TxDOT 11-4-02

DN: BAS	CK: GRB	DW: FDN	CK: CAL

REVISIONS	STATE DISTRICT	FEDERAL REGION	FEDERAL AID PROJECT	SHEET
		6		36
	COUNTY	CONTROL	SECTION	JOB	HIGHWAY

DISCLAIMER
The use of this standard is governed by the "Texas Engineering Practice Act". No warranty of any kind is made by TxDOT for any purpose whatsoever. TxDOT assumes no responsibility for the conversion of this standard to other formats or for incorrect results or damages resulting from its use.

LEVELS DISPLAYED

1	2	3	4	5	6	7	8	9	10	11	12	13	14	15	16
17	18	19	20	21	22	23	24	25	26	27	28	29	30	31	32
33	34	35	36	37	38	39	40	41	42	43	44	45	46	47	48
49	50	51	52	53	54	55	56	57	58	59	60	61	62	63	

ACC:

GENERAL NOTES

1. Drums and all related items shall comply with the requirements of the current version of the "Texas Manual on Uniform Traffic Control Devices" (TMUTCD) and the "Compliant Work Zone Traffic Control Devices List" (CWZTCD).
2. Drums, bases, and related materials shall exhibit good workmanship and shall be free from objectionable marks or defects that would adversely affect their appearance or serviceability.
3. ⚠1 The Contractor shall have a maximum of 24 hours to replace any plastic drums or other traffic control devices identified for replacement by the Engineer/Inspector. The replacement device must be an approved device.

Prequalified plastic drums shall meet the following requirements:

GENERAL DESIGN REQUIREMENTS

1. Plastic drums shall be a two-piece design; the "body" of the drum shall be the top portion and the "base" shall be the bottom.
2. The body and base shall lock together in such a manner that the body separates from the base when impacted by a vehicle traveling at a speed of 20 MPH or greater but prevents accidental separation due to normal handling and/or air turbulence created by passing vehicles.
3. Plastic drums shall be constructed of lightweight flexible, and deformable materials. The Contractor shall NOT use metal drums or single piece plastic drums as channelization devices or sign supports.
4. Drums shall present a profile that is a minimum of 18 inches in width at the 36 inch height when viewed from any direction. The height of drum unit (body installed on base) shall be a minimum of 36 inches and a maximum of 42 inches.
5. The top of the drum shall have a built-in handle for easy pickup and shall be designed to drain water and not collect debris. The handle shall have a minimum of two widely spaced 9/16 inch diameter holes to allow attachment of a warning light, delineator reflector unit or non-plywood sign.
6. The exterior of the drum body shall have a minimum of four alternating orange and white retroreflective circumferential stripes not less than 4 inches nor greater than 8 inches in width. Any non-reflectorized space between any two adjacent stripes shall not exceed 2 inches in width.
7. Bases shall have a maximum width of 36 inches, a maximum height of 4 inches, and a minimum of two footholds of sufficient size to allow base to be held down while separating the drum body from the base.
8. Plastic drums shall be constructed of ultra-violet stabilized, orange, high-density polyethylene (HDPE) or other approved material.
9. Drum body shall have a minimum unballasted weight of 7.7 lbs. and maximum unballasted weight of 11 lbs. The wall of the drum body shall be a minimum of 0.07 inch in thickness. Weight of any drum supplied shall not vary more than 0.5 lb. from that of the prequalified sample.
10. Drum and base shall be marked with manufacturer's name and model number.

RETROREFLECTIVE SHEETING

1. The stripes used on drums shall be constructed of sheeting meeting the color and retroreflectivity requirements of Departmental Materials Specification DMS-8300, "Flat Surface Reflective Sheeting." High Specific Intensity (Type C) retro-reflective sheeting shall be supplied unless otherwise specified in the plans.
2. The sheeting shall be suitable for use on and shall adhere to the drum surface such that, upon vehicular impact, the sheeting shall remain adhered in-place and exhibit no delaminating, checking, cracking, or loss of retroreflectivity other than that loss due to abrasion of the sheeting surface.

BALLAST

1. Unballasted bases shall be large enough to hold up to 50 lbs. of sand. This base, when filled with the ballast material, should weigh between 35 lbs (minimum) and 50 lbs (maximum). The ballast may be sand in one to three sandbags separate from the base, sand in a sand-filled plastic base, or other ballasting devices as approved by the Engineer. Stacking of sandbags will be allowed, however height of sandbags above pavement surface may not exceed 12 inches.
2. Bases with built-in ballast shall weigh between 40 lbs. and 50 lbs. Built-in ballast can be constructed of an integral crumb rubber base or a solid rubber base.
3. The ballast shall not be heavy objects, water, or any material that would become hazardous to motorists, pedestrians, or workers when the drum is struck by a vehicle.
4. When used in regions susceptible to freezing, drums shall have drainage holes in the bottoms so that water will not collect and freeze becoming a hazard when struck by a vehicle.
5. Ballast shall not be placed on top of drums.
6. Adhesives may be used to secure base of drums to pavement.

Type C Warning Light or approved substitute mounted adjacent to the travel way.

WARNING LIGHTS AND DELINEATORS MOUNTED ON PLASTIC DRUMS

1. Type A flashing warning lights are intended to warn drivers that they are approaching or are in a potentially hazardous area.
2. Type A flashing warning lights are not intended for delineation and shall not be used in a series.
3. Type C steady-burn warning lights are intended to be used in a series to delineate the edge of the travel lane on detours, on lane changes, on lane closures, and on other similar conditions.
4. Type A and Type C warning lights shall be installed at locations as detailed on other sheets in the plans.
5. Warning lights shall not be installed on a drum that has a sign, chevron or vertical panel.
6. Type A Class 1, Type A Class 2, or Type B Reflector Units (D & OM Standard) may be attached to drums to delineate the intended vehicular path. The color of the reflector unit shall correspond to the pavement marking it is supplementing or for which it is substituting (left edgeline-yellow or right edgeline-white). The reflective unit shall be attached to the handle of the drum using the mounting hole nearest the travel lane and shall be aligned perpendicular to approaching traffic.
7. Delineators may be used as directed by the Engineer. Delineators may not be used as a substitute for warning lights.

"CONSTRUCTION RECORD DRAWINGS_8-01-2009

WARNING REFLECTORS MOUNTED ON PLASTIC DRUMS AS A SUBSTITUTE FOR TYPE C WARNING LIGHTS

Warning reflector may be round or square. Must have a reflective surface area of at least 30 square inches

1. A warning reflector or approved substitute may be mounted on a plastic drum as a substitute for a Type C, steady burn warning light at the discretion of the Contractor unless otherwise noted in the plans.
2. The warning reflector shall be manufactured using a sign substrate approved for use with plastic drums listed on the CWZTCD.
3. The warning reflector shall have a minimum retroreflective surface area (one-side) of 30 square inches.
4. Round reflectors shall be fully reflectorized, including the area where attached to the drum.
5. Square substrates must have a minimum of 30 square inches of reflectorized sheeting. They do not have to be reflectorized where it attaches to the drum.
6. The side of the warning reflector facing approaching traffic shall have sheeting meeting the color and retroreflectivity requirements for DMS 8300-Type D (Non-fluorescent Prismatic).
7. When used near two-way traffic, both sides of the warning reflector shall be reflectorized.
8. The warning reflector should be mounted on the side of the handle nearest approaching traffic.

TYPICAL DETAIL OF LANE CLOSURE USING PLASTIC DRUMS AS CHANNELIZING DEVICES

LEGEND

- Flashing Arrow Panel
- ○ Plastic Drum
- Plastic Drum w/ approved channelizing device

Provide adequate sight distance when placing lane closures. Do not place lane closures in vertical or horizontal curves.
See BC(8) for table showing the spacing of channelizing devices in the taper and tangent section.

✱ NOTE: Lane lines shall be removed when the lane closure occupies a location for longer than 2 weeks.

18" x 24" Sign (Maximum Sign Dimension) Chevron CW1-8, Driveway sign D70a, Keep Right R4 series or other signs as approved by Engineer

12" x 24" Vertical Panel mount with diagonals sloping down towards travel way

Plywood, Aluminum or Metal sign substrates shall NOT be used on plastic drums

SIGNS, CHEVRONS, AND VERTICAL PANELS MOUNTED ON PLASTIC DRUMS

1. Signs used on plastic drums shall be manufactured using substrates listed on the CWZTCD.
2. Chevrons and other work zone signs with an orange background shall be manufactured with Type E (Fluorescent Prismatic) sheeting meeting the color and retroreflectivity requirements of DMS-8300, "Flat Surface Reflective Sheeting," unless otherwise specified in the plans.
3. Vertical Panels shall be manufactured with orange and white sheeting meeting the requirements of DMS-8300 Type C (High Specific Intensity). Diagonal stripes on Vertical Panels shall slope down toward the intended traveled lane.
4. Other sign messages (text or symbolic) may be used as approved by the Engineer. Sign dimensions shall not exceed 18 inches in width or 24 inches in height.
5. Signs shall be installed using a 1/2 inch bolt (nominal) and nut, two washers, and one locking washer for each connection.
6. Mounting bolts and nuts shall be fully engaged and adequately torqued. Bolts should not extend more than 1/2 inch beyond nuts.

Only pre-qualified products shall be used. A copy of the "Compliant Work Zone Traffic Control Devices List" (CWZTCD) describes pre-qualified products and their sources and may be obtained by contacting:

Standards Engineer
Traffic Operations Division - TE
Texas Department of Transportation
125 East 11th Street
Austin, Texas 78701-2483
Phone (512) 416-3120
Fax (512) 416-3299

Instructions to locate the "CWZTCD" on TxDOT website are:

Start at website - www.dot.state.tx.us
Click on "About TxDOT",
Click on "Organizational Chart",
Click on Traffic Operations Box,
Click on "Compliant Work Zone Traffic Control Devices",
Click on "View PDF".
This site is printable.

4/03 Revision

⚠1 Revised note

STANDARD PLANS
Texas Department of Transportation
Traffic Operations Division

BARRICADE AND CONSTRUCTION PLASTIC DRUM STANDARD

7 of 12 BC(7)-03

©TxDOT 11-4-02	DN: BAS	CK: GRB	DW: FDN	CK: CAL
REVISIONS 4-03	STATE DISTRICT	FEDERAL REGION 6	FEDERAL AID PROJECT	SHEET 37
	COUNTY	CONTROL	SECTION	JOB	HIGHWAY

P-200612-01

DISCLAIMER
The use of this standard is governed by the "Texas Engineering Practice Act". No warranty of any kind is made by TxDOT for any purpose whatsoever. TxDOT assumes no responsibility for the conversion of this standard to other formats or for incorrect results or damages resulting from its use.

CHANNELIZING DEVICES

VERTICAL PANELS

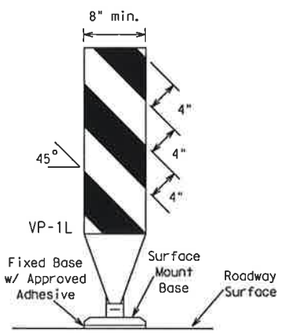

FIXED

(Rigid or self-righting)

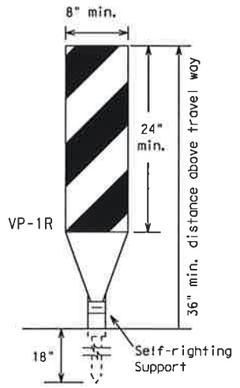

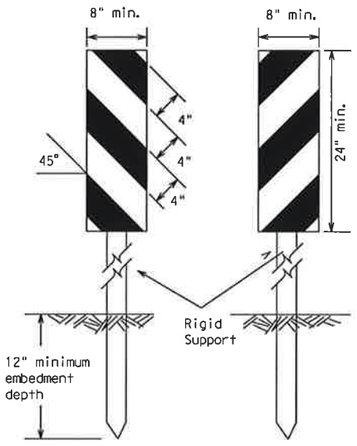

DRIVEABLE

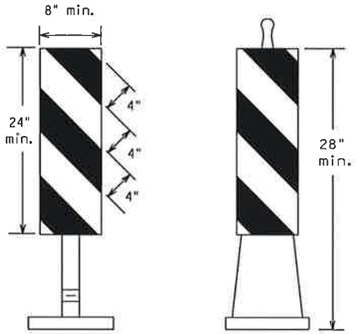

(Rigid or self-righting)

PORTABLE

1. Vertical Panels (VP's) are normally used to channelize traffic or divide opposing lanes of traffic.
2. VP's may be used in daytime or nighttime situations. They may be used at the edge of shoulder drop-offs and other areas such as lane transitions where positive daytime and nighttime delineation is required. The Engineer/Inspector shall refer to the Roadway Design Manual Appendix B "Treatment of Pavement Drop-offs in Work Zones" for additional guidelines on the use of VP's for drop-offs.
3. VP's should be mounted back to back if used at the edge of cuts adjacent to two-way two lane roadways. Stripes are to be reflective orange and reflective white and should always slope downward toward the travel lane.
4. VP's used on expressways, freeways, and on high speed roadways shall have a minimum of 2 square feet of retroreflective area facing traffic.
5. Self-righting supports are available with portable base. See "Compliant Work Zone Traffic Control Devices List" (CWZTCD).
6. Sheeting for the VP's shall be retroreflective Type C (High Specific Intensity) conforming to Departmental Material Specification DMS-8300, unless noted otherwise.

CHEVRONS

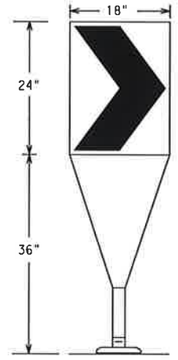

Fixed Base w/ Approved Adhesive (Driveable Base, or Flexible Support can be used)

1. The chevron shall be a vertical rectangle with a minimum size of 12 by 18 inches.
2. Chevrons are intended to give notice of a sharp change of alignment with the direction of travel and provide additional emphasis and guidance for vehicle operators with regard to changes in horizontal alignment of the roadway.
3. Chevrons, when used, shall be erected on the outside of a sharp curve or turn, or on the far side of an intersection. They shall be in line with and at right angles to approaching traffic. Spacing should be such that the motorist always has three in view, until the change in alignment eliminates its need.
4. To be effective, the chevron should be visible for at least 500 feet.
5. Chevrons shall be orange with a black non-reflective legend. Sheeting for the chevron shall be retroreflective Type E (Fluorescent Prismatic) conforming to Departmental Material Specification DMS-8300, unless noted otherwise. The legend shall be black vinyl non-reflective decal sheeting meeting the requirements of DMS-8320.

Posted Speed	Formula	Minimum Desirable Taper Lengths ✳✳ 10' Offset	11' Offset	12' Offset	Suggested Maximum Spacing of Channelizing Devices On a Taper	On a Tangent
30	$L=\frac{WS^2}{60}$	150'	165'	180'	30'	60'-75'
35		205'	225'	245'	35'	70'-90'
40		265'	295'	320'	40'	80'-100'
45	L=WS	450'	495'	540'	45'	90'-110'
50		500'	550'	600'	50'	100'-125'
55		550'	605'	660'	55'	110'-140'
60		600'	660'	720'	60'	120'-150'
65		650'	715'	780'	65'	130'-165'
70		700'	770'	840'	70'	140'-175'
75		750'	825'	900'	75'	150'-185'

✳✳Taper lengths have been rounded off.
L=Length of Taper (FT.) W=Width of Offset (FT.) S=Posted Speed (MPH)

GENERAL NOTES:

1. Work Zone channelizing devices illustrated on this sheet may be installed in close proximity to traffic and are suitable for use on high or low speed roadways. The Engineer/Inspector shall ensure that spacing and placement is uniform and in accordance with the "Texas Manual on Uniform Traffic Control Devices" (TMUTCD).
2. Channelizing devices shown on this sheet may have a driveable, fixed or portable base. The requirement for self-righting channelizing devices must be specified in the General Notes or other plan sheets.
3. Channelizing devices on self-righting supports should be used in work zone areas where channelizing devices are frequently impacted by errant vehicles or vehicle related wind gusts making alignment of the channelizing devices difficult to maintain. Locations of these devices shall be detailed elsewhere in the plans. These devices shall conform to the TMUTCD and the "Compliant Work Zone Traffic Control Devices List" (CWZTCD).
4. The contractor shall maintain devices in a clean condition and replace damaged, non-reflective, faded, or broken devices and bases as required by the Engineer/Inspector. The Contractor shall be required to maintain proper device spacing and alignment.
5. Portable bases shall be fabricated from virgin and/or recycled rubber. The portable bases shall weigh approximately 35 lbs.
6. Pavement surfaces shall be prepared in a manner that ensures proper bonding between the adhesives, the fixed mount bases and the pavement surface. Adhesives shall be prepared and applied according to the manufacturer's recommendations.
7. The installation and removal of channelizing devices shall not cause detrimental effects to the final pavement surfaces, including pavement surface discoloration or surface integrity. Driveable bases shall not be permitted on final pavement surfaces. The Engineer/Inspector shall approve all application and removal procedures of fixed bases.
8. Examples on this sheet are the most commonly used channelizing devices in work zones. For other devices, refer to the CWZTCD.

Only pre-qualified products shall be used. A copy of the "Compliant Work Zone Traffic Control Devices List" (CWZTCD) describes pre-qualified products and their sources and may be obtained by contacting:

Standards Engineer
Traffic Operations Division - TE
Texas Department of Transportation
125 East 11th Street
Austin, Texas 78701-2483
Phone (512) 416-3120
Fax (512) 416-3299

Instructions to locate the "CWZTCD" on TxDOT website are:

Start at website - www.dot.state.tx.us
Click on "About TxDOT",
Click on "Organizational Chart",
Click on Traffic Operations Box,
Click on "Compliant Work Zone Traffic Control Devices",
Click on "View PDF".
This site is printable.

OPPOSING TRAFFIC LANE DIVIDERS (OTLD)

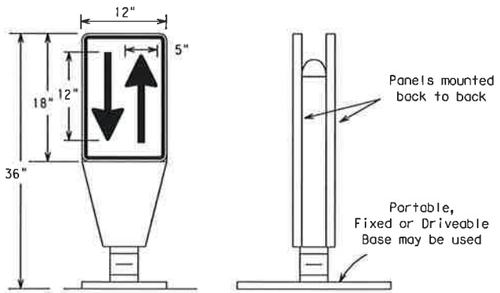

1. Opposing Traffic Lane Dividers (OTLD) are delineation devices designed to convert a normal one-way roadway section to two-way operation. OTLD's are used on temporary centerlines. The upward and downward arrows on the sign's face indicate the direction of traffic on either side of the divider. The base is secured to the pavement with an adhesive or rubber weight to minimize movement caused by a vehicle impact or wind gust. The OTLD is placed on a flexible self-righting support that returns to an upright position when impacted by a vehicle.
2. The OTLD may be used in combination with simple tubular markers or vertical panels (vp's).
3. Spacing between the OTLD shall not exceed 500 feet. Tubular markers or vp's placed between the OTLD's should not exceed 100 foot spacing.
4. The OTLD shall be orange with a black non-reflective legend. Sheeting for the OTLD shall be retroreflective Type E (Fluorescent Prismatic) conforming to Departmental Material Specification DMS-8300, unless noted otherwise. The legend shall be black vinyl non-reflective decal sheeting meeting the requirements of DMS-8320.

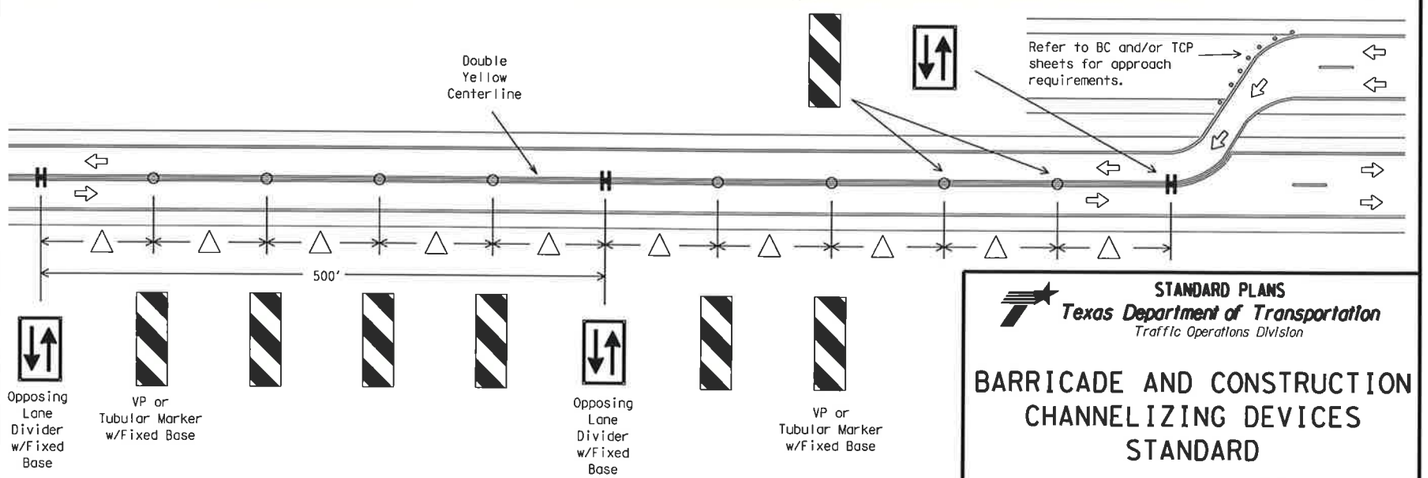

△ Spacing between the VP's or tubular markers shall not exceed 100 feet. On roadways with speeds less than 45 MPH, spacing between the tubular markers or VP's shall be as shown on the channelizing spacing table shown on this page. If the table shows spacing greater than 100 feet based on the roadway speed, then use a maximum of 100 feet spacing between the tubular markers or VP's. Every fifth channelizing device shall be on OTLD. Spacing between the OTLD shall not exceed 500 feet. When using this type of traffic control set-up, the OTLD, VP's or tubular markers shall have the fixed base with approved adhesive per the manufacturer's recommendations.

"CONSTRUCTION RECORD DRAWINGS_8-01-2009

STANDARD PLANS
Texas Department of Transportation
Traffic Operations Division

BARRICADE AND CONSTRUCTION CHANNELIZING DEVICES STANDARD

8 of 12 BC(8)-03

© TxDOT 11-4-02	DN: BAS	CK: GRB	DW: FDN	CK: CAL
REVISIONS	STATE DISTRICT: 6	FEDERAL REGION	FEDERAL AID PROJECT	SHEET: 38
	COUNTY	CONTROL	SECTION	JOB	HIGHWAY

LEVELS DISPLAYED ACC:
1 2 3 4 5 6 7 8 9 10 11 12 13 14 15 16
17 18 19 20 21 22 23 24 25 26 27 28 29 30 31 32
33 34 35 36 37 39 40 41 42 43 44 45 46 47 48
49 50 51 52 53 54 55 56 57 58 59 60 61 62 63

P-200612-01

DISCLAIMER
The use of this standard is governed by the "Texas Engineering Practice Act". No warranty of any kind is made by TxDOT for any purpose whatsoever. TxDOT assumes no responsibility for the conversion of this standard to other formats or for incorrect results or damages resulting from its use.

TYPE III BARRICADES

1. Refer to the Compliant Work Zone Traffic Control Devices List (CWZTCD) for details of the Type III Barricades and a list of all materials used in the construction of Type III Baricades.
2. Type III Barricades shall be used at each end of construction projects closed to all traffic.
3. Barricades extending across a roadway should have stripes that slope downward in the direction toward which traffic must turn in detouring. When both right and left turns are provided, the chevron striping may slope downward in both directions from the center of the barricade.
4. Striping of rails, for the right side of the roadway, should slope downward to the left. For the left side of the roadway, striping should slope downward to the right.
5. Identification markings may be shown only on the back of the barricade rails. The maximum height of letters and/or company logos used for identification shall be 1".
6. Barricades shall not be placed parallel to traffic unless an adequate clear zone is provided.
7. Warning lights shall NOT be installed on barricades.
8. Where barricades require the use of weights to keep from turning over, the use of sandbags with dry, cohesionless sand is recommended. The sandbags will be tied shut to keep the sand from spilling and to maintain a constant weight. Rock, concrete, iron, steel or other solid objects will NOT be permitted. Sandbags should weigh a minimum of 35 lbs and a maximum of 50 lbs. Sandbags shall be made of a durable material that tears upon vehicular impact. Rubber (such as tire inner tubes) shall not be used for sandbags. Sandbags shall only be placed along or upon the base supports of the device and shall not be suspended above ground level or hung with rope, wire, chains or other fasteners.

Barricades shall NOT be used as a sign support.

TYPICAL STRIPING DETAIL FOR BARRICADE RAIL

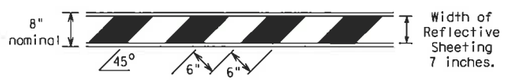

TYPICAL PANEL DETAIL FOR SKID OR POST TYPE BARRICADES

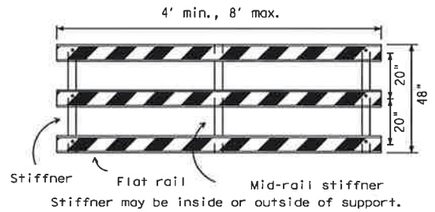

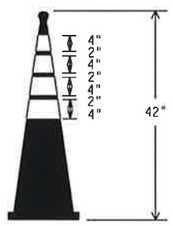

EDGELINE CHANNELIZER

1. This device is intended only for use in place of a vertical panel to channelize traffic by indicating the edge of the travel lane.
2. This device shall not be used to separate lanes of traffic (opposing or otherwise) or warn of objects.
3. This device is based on a 42 inch, two-piece cone with an alternate striping pattern: four 4 inch retroreflective bands, with an approximate 2 inch gap between bands. The color of the band should correspond to the color of the edgeline (yellow for left edgeline, white for right edgeline) for which the device is substituted or for which it supplements. The reflectorized bands shall be retroreflective Type C (High Specific Intensity) conforming to Departmental Material Specification DMS-8300, unless otherwise noted.
4. The base must weigh a minimum of 30 lbs.

TYPE III BARRICADE (POST AND SKID) TYPICAL APPLICATION

Each roadway of a divided highway shall be barricaded in the same manner.

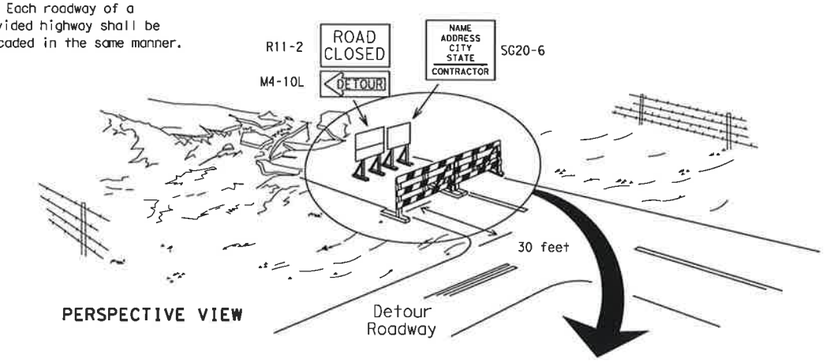

PERSPECTIVE VIEW

The three rails on Type III barricades shall be reflectorized orange and reflective white stripes on one side facing one-way traffic and both sides for two-way traffic.
Barricade striping should slant downward in the direction of detour.

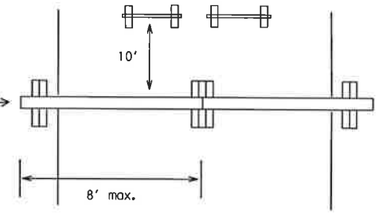

PLAN VIEW

1. Signs should be mounted on independent supports at a 7 foot mounting height in center of roadway. The signs should be a minimum of 10 feet behind Type III Barricades.
2. Advance signing shall be as specified elsewhere in the plans.

CULVERT WIDENING OR OTHER ISOLATED WORK WITHIN THE PROJECT LIMITS

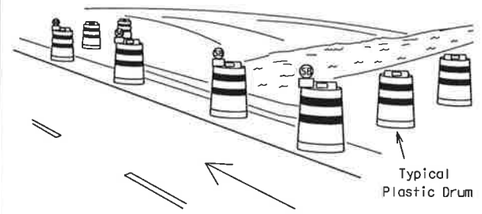

PERSPECTIVE VIEW

1. Where positive redirectional capability is provided, drums may be omitted.
2. Plastic construction fencing may be used with drums for safety as required in the plans.
3. Vertical Panels on flexible support may be substituted for drums when the shoulder width is less than 4 feet.
4. When the shoulder width is greater than 12 feet, steady-burn lights may be omitted if drums are used.
5. Drums must extend the length of the culvert widening.

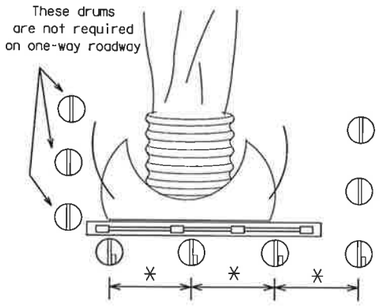

PLAN VIEW

Legend
- Plastic drum
- Plastic drum with steady burn light

Only pre-qualified products shall be used. A copy of the "Compliant Work Zone Traffic Control Devices List" (CWZTCD) describes pre-qualified products and their sources and may be obtained by contacting:

Standards Engineer
Traffic Operations Division - TE
Texas Department of Transportation
125 East 11th Street
Austin, Texas 78701-2483
Phone (512) 416-3120
Fax (512) 416-3299

Instructions to locate the "CWZTCD" on TxDOT website are:

Start at website - www.dot.state.tx.us
Click on "About TxDOT",
Click on "Organizational Chart",
Click on Traffic Operations Box,
Click on "Compliant Work Zone Traffic Control Devices",
Click on "View PDF".
This site is printable.

"CONSTRUCTION RECORD DRAWINGS_8-01-2009

CONES

28" Cones shall have a minimum weight of 9 1/2 lbs.

42" 2-piece cones shall have a minimum weight of 30 lbs.

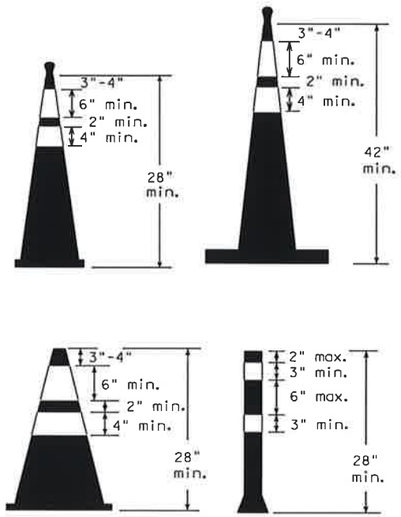

1. Traffic cones and tubular markers shall be a minimum of 28 inches in height when used either on freeways or at nighttime.
2. Cones or tubular markers shall be predominantly orange, fluorescent red-orange, or fluorescent yellow-orange. They should be kept clean and bright for maximum visibility.
3. Cones used only for daytime operations do not require the reflectorized bands.
4. Cones used for nighttime operations shall be reflectorized. Reflectorized material shall have a smooth, sealed outer surface that displays the same approximate color during the day and night. The reflectorized bands shall be retroreflective Type C (High Specific Intensity) conforming to Departmental Material Specification DMS-8300, unless otherwise noted.
5. When used at night, appropriate personnel shall ensure that cones and tubular markers remain in their proper location and in an upright position.
6. Reflectorization of cones shall consist of a minimum 6 inch band placed at least 3 inches but not more than 4 inches from the top, supplemented by a minimum 4 inch band spaced a minimum of 2 inches below the 6 inch band.
7. Reflectorization of tubular markers shall be a minimum of two 3 inch bands placed a maximum of 2 inches from the top with a maximum of 6 inches between bands. The reflectorized bands shall be retroreflective Type C (High Specific Intensity) conforming to Departmental Material Specification DMS-8300, unless otherwise noted.
8. One-piece cones or tubular markers are generally suitable for temporary usage (up to 8 hours) with other channelization devices such as vertical panels, drums or two-piece cones for long term usage. Care should be taken to ensure they remain in their proper location and in an upright position.
9. Cones or tubular markers used on each project shall be of the same size and shape.
10. The handle may be designed as a hook or other shape, fabricated from non-rigid materials similar to the cone material, and may extend up to a maximum of 8 inches above the top of cone. Length of the handle shall not be considered with regard to the overall height of the cone.

STANDARD PLANS
Texas Department of Transportation
Traffic Operations Division

BARRICADE AND CONSTRUCTION TYPE III BARRICADE & CONES STANDARD

9 of 12 BC(9)-03

© TxDOT 11-4-02	DN: BAS	CK: GRB	DW: FDN	CK: CAL
REVISIONS	STATE DISTRICT	FEDERAL REGION	FEDERAL AID PROJECT	SHEET
		6		39
	COUNTY	CONTROL	SECTION	JOB	HIGHWAY

LEVELS DISPLAYED ACC:

1	2	3	4	5	6	7	8	9	10	11	12	13	14	15	16
17	18	19	20	21	22	23	24	25	26	27	28	29	30	31	32
33	34	35	36	37	38	39	40	41	42	43	44	45	46	47	48
49	50	51	52	53	54	55	56	57	58	59	60	61	62	63	

P-200612-01

DISCLAIMER
The use of this standard is governed by the "Texas Engineering Practice Act". No warranty of any kind is made by TxDOT for any purpose whatsoever. TxDOT assumes no responsibility for the conversion of this standard to other formats or for incorrect results or damages resulting from its use.

WORK ZONE PAVEMENT MARKINGS

GENERAL

1. The Contractor shall be responsible for maintaining work zone and existing pavement markings, in accordance with the standard specifications and special provisions, on all roadways open to traffic within the CSJ limits unless otherwise stated in the plans.
2. Color, patterns and dimensions shall be in conformance with the "Texas Manual on Uniform Traffic Control Devices" (TMUTCD).
3. Additional supplemental pavement marking details may be found in the plans or specifications.
4. Pavement markings shall be installed in accordance with the TMUTCD and as shown on the plans.
5. When short term markings are required on the plans, short term markings shall conform with the TMUTCD, the plans and details as shown on the Standard Plan Sheet WZ(STPM).
6. When standard pavement markings are not in place and the roadway is opened to traffic, DO NOT PASS signs shall be erected to mark the beginning of the sections where passing is prohibited and the sections where passing is permitted.
7. All work zone pavement markings shall be installed in accordance with Item 662, "Work Zone Pavement Markings."

RAISED PAVEMENT MARKERS

1. Raised pavement markers are to be placed according to the patterns on BC(11).
2. All raised pavement markers used for work zone markings shall meet the requirements of Item 672, "RAISED PAVEMENT MARKERS" and Departmental Material Specification DMS-4200 or DMS-4300.
3. A list of prequalified reflective raised pavement markers can be found at the following web site:
   ftp://ftp.dot.state.tx.us/pub/txdot-info/gsd/pdf/dms4200preq.pdf
4. A list of prequalified non-reflective traffic buttons can be found at the following web site:
   ftp://ftp.dot.state.tx.us/pub/txdot-info/gsd/pdf/4300preq.pdf

PREFABRICATED PAVEMENT MARKINGS

1. Removable prefabricated pavement markings shall meet the requirements of DMS-8241. A list of prequalified products can be found at the following web site:
   ftp://ftp.dot.state.tx.us/pub/txdot-info/gsd/pdf/pavemark.pdf
2. Non-removable prefabricated pavement markings (foil back) shall meet the requirements of DMS-8240 or the TXDOT Purchase Specification No. 550-74-89. A list of prequalified products and a copy of the TXDOT Purchase Specifications can be found at web sites:
   ftp://ftp.dot.state.tx.us/pub/txdot-info/gsd/pdf/pavement.pdf
   ftp://ftp.dot.state.tx.us/pub/txdot-info/gsd/pdf/tss/tss377.pdf

MAINTAINING WORK ZONE PAVEMENT MARKINGS

1. The Contractor will be responsible for maintaining work zone pavement markings within the work limits.
2. Work zone pavement markings shall be inspected in accordance with the frequency and reporting requirements of work zone traffic control device inspections as required by Form 599.
3. The markings should provide a visible reference for a minimum distance of 300 feet during normal daylight hours and 150 feet when illuminated by automobile low-beam headlights at night, unless sight distance is restricted by roadway geometrics.
4. Markings failing to meet this criteria shall be replaced as required by the Engineer at the expense of the Contractor.

REMOVAL OF PAVEMENT MARKINGS

1. Pavement markings that are no longer applicable, could create confusion or direct a motorist toward or into the closed portion of the roadway, shall be removed or obliterated before the roadway is opened to traffic.
2. The above shall not apply to detours in place for less than two weeks, where flaggers and/or sufficient channelizing devices are used in lieu of markings to outline the detour route.
3. Pavement markings shall be removed to the fullest extent possible, so as not to leave a disernible marking, by any method that does not materially damage the surface or texture of the pavement.
4. The removal of pavement markings may require resurfacing or seal coating portions of the roadway.
5. Subject to the approval of the Engineer, any method that proves to be successful on a particular type pavement may be used.
6. Blast cleaning may be used but will not be required unless specifically shown in the plans.
7. Over-painting of the markings SHALL NOT BE permitted.
8. Removal of raised pavement markers shall be as directed by the Engineer.
9. Removal of existing pavement markings and markers will be paid for directly in accordance with Item 677, "ELIMINATING EXISTING PAVEMENT MARKINGS AND MARKERS," unless otherwise stated in the plans.

Temporary Flexible-Reflective Roadway Marker Tabs

STAPLES OR NAILS SHALL NOT BE USED TO SECURE TEMPORARY FLEXIBLE-REFLECTIVE ROADWAY MARKER TABS TO THE PAVEMENT SURFACE

1. Temporary flexible-reflective roadway marker tabs used as guidemarks shall meet the requirements of DMS-8242.
2. Tabs detailed on this sheet are to be inspected and accepted by the Engineer or designated representative. Sampling and testing is not normally required, however at the option of the Engineer, either "A" or "B" below may be imposed to assure quality before placement on the roadway.
   A. Select five (5) or more tabs at random from each lot or shipment and submit to the Construction Division, Materials and Pavement Section to determine specification compliance.
   B. Select five (5) tabs and perform the following test. Affix five (5) tabs at 24 inch intervals on an asphaltic pavement in a straight line. Using a medium size passenger vehicle or pickup, run over the markers with the front and rear tires at a speed of 35 to 40 miles per hour, four (4) times in each direction. No more than one (1) out of the five (5) reflective surfaces shall be lost or displaced as a result of this test.
3. Small design variances may be noted between tab manufacturers.

Raised Pavement Markers used as Guidemarks

1. Raised pavement markers used as guidemarks shall be from the approved product list, and meet the requirements of DMS-4200.
2. All temporary construction raised pavement markers provided on a project shall be of the same manufacturer.
3. Adhesive for guidemarks shall be bituminous material hot applied or butyl rubber pad for all surfaces, or thermoplastic for concrete surfaces.

Guidemarks shall be designated as:
YELLOW - (two amber reflective surfaces with yellow body).
WHITE - (one silver reflective surface with white body).

DEPARTMENTAL MATERIAL SPECIFICATIONS

PAVEMENT MARKERS (REFLECTORIZED)	DMS-4200
TRAFFIC BUTTONS	DMS-4300
EPOXY AND ADHESIVES	DMS-6100
BITUMINOUS ADHESIVE FOR PAVEMENT MARKERS	DMS-6130
PREFABRICATED PAVEMENT MARKINGS-PERMANENT	DMS-8240
PREFABRICATED PAVEMENT MARKINGS-REMOVABLE	DMS-8241
TEMPORARY FLEXIBLE-REFLECTIVE ROADWAY MARKER TABS	DMS-8242

Only pre-qualified products shall be used. A copy of the "Compliant Work Zone Traffic Control Devices List" (CWZTCD) describes pre-qualified products and their sources and may be obtained by contacting:

**Standards Engineer
Traffic Operations Division - TE
Texas Department of Transportation
125 East 11th Street
Austin, Texas 78701-2483
Phone (512) 416-3120
Fax (512) 416-3299**

Instructions to locate the "CWZTCD" on TxDOT website are:

**Start at website - www.dot.state.tx.us
Click on "About TxDOT",
Click on "Organizational Chart",
Click on Traffic Operations Box,
Click on "Compliant Work Zone Traffic Control Devices",
Click on "View PDF".
This site is printable.**

LEVELS DISPLAYED
ACC:

"CONSTRUCTION RECORD DRAWINGS_8-01-2009

STANDARD PLANS
Texas Department of Transportation
Traffic Operations Division

BARRICADE AND CONSTRUCTION PAVEMENT MARKINGS STANDARD

10 of 12 BC(10)-03

©TxDOT February 1998	DN: - LR	CK: - DTN	DW: - FDN	CK: - CAL
REVISIONS 1-97, 2-98, 1-02, 11-02	STATE DISTRICT:	FEDERAL REGION: 6	FEDERAL AID PROJECT	SHEET: 40
	COUNTY	CONTROL	SECTION / JOB	HIGHWAY

DISCLAIMER
The use of this standard is governed by the "Texas Engineering Practice Act". No warranty of any kind is made by TxDOT for any purpose whatsoever. TxDOT assumes no responsibility for the conversion of this standard to other formats or for incorrect results or damages resulting from its use.

PAVEMENT MARKING PATTERNS

CENTER LINE & NO-PASSING ZONE BARRIER LINES FOR TWO-LANE, TWO-WAY HIGHWAYS

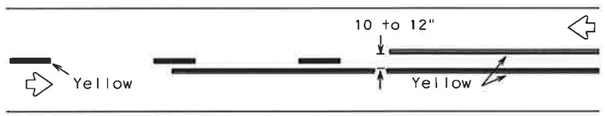

REFLECTORIZED PAVEMENT MARKINGS - PATTERN A

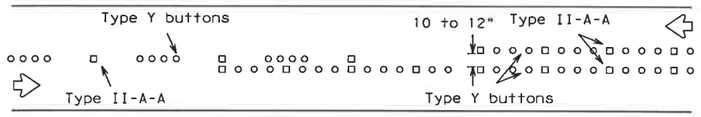

RAISED PAVEMENT MARKERS - PATTERN A

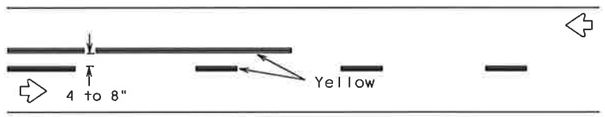

REFLECTORIZED PAVEMENT MARKINGS - PATTERN B

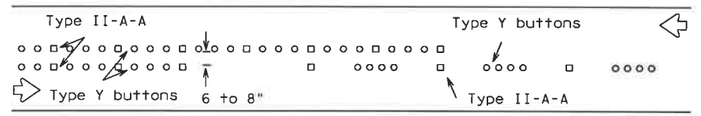

RAISED PAVEMENT MARKERS - PATTERN B

Pattern A is the TXDOT Standard, however Pattern B may be used if approved by the Engineer.
Prefabricated markings may be substituted for reflectorized pavement markings.

"CONSTRUCTION RECORD DRAWINGS_8-01-2009

EDGE & LANE LINES FOR DIVIDED HIGHWAY

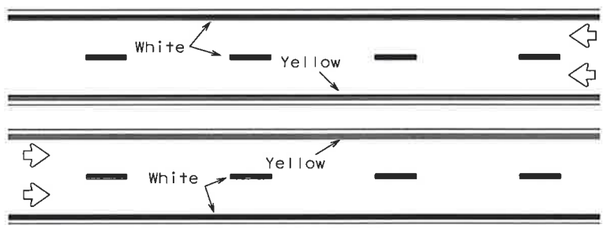

REFLECTORIZED PAVEMENT MARKINGS

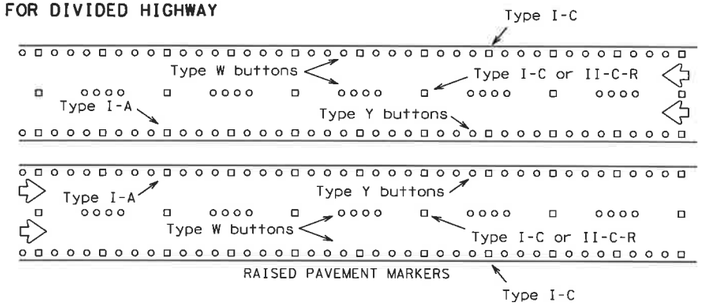

RAISED PAVEMENT MARKERS

Prefabricated markings may be substituted for reflectorized pavement markings.

LANE & CENTER LINES FOR MULTILANE UNDIVIDED HIGHWAYS

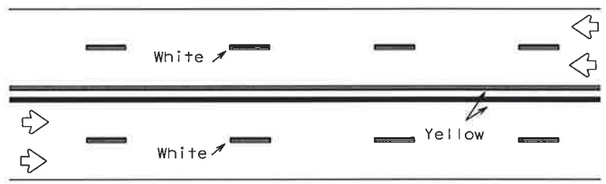

REFLECTORIZED PAVEMENT MARKINGS

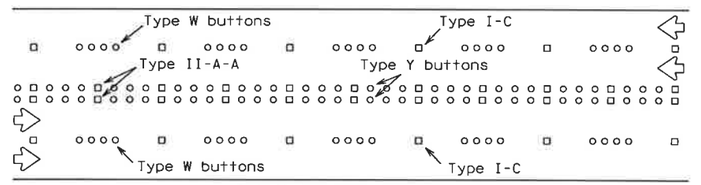

RAISED PAVEMENT MARKERS

Prefabricated markings may be substituted for reflectorized pavement markings.

TWO-WAY LEFT TURN LANE

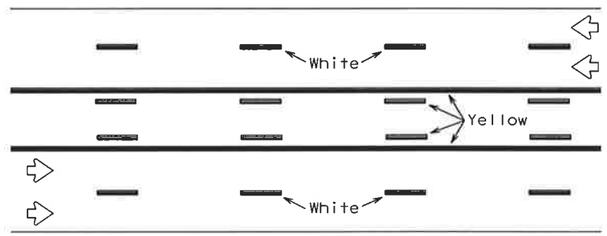

REFLECTORIZED PAVEMENT MARKINGS

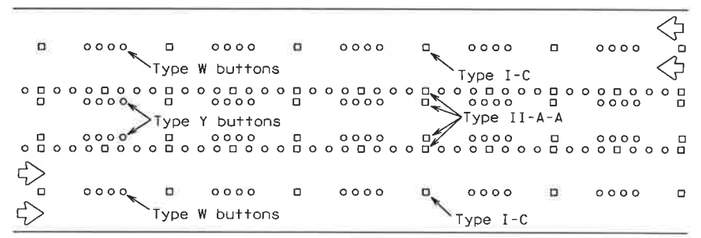

RAISED PAVEMENT MARKERS

Prefabricated markings may be substituted for reflectorized pavement markings.

STANDARD WORK ZONE PAVEMENT MARKINGS DETAILS

SOLID LINES

DOUBLE NO-PASSING LINE

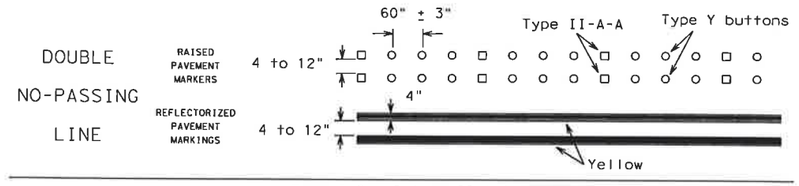

EDGE LINE OR SINGLE NO-PASSING LINE

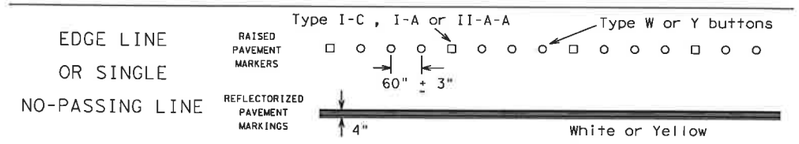

WIDE LINE

(FOR LEFT TURN CHANNELIZING LINE OR CHANNELIZING LINE USED TO DISCOURAGE LANE CHANGING.)

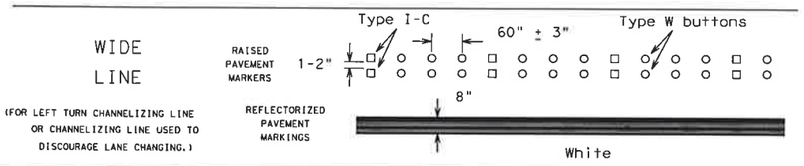

BROKEN LINE

(FOR CENTER LINE OR LANE LINE.)

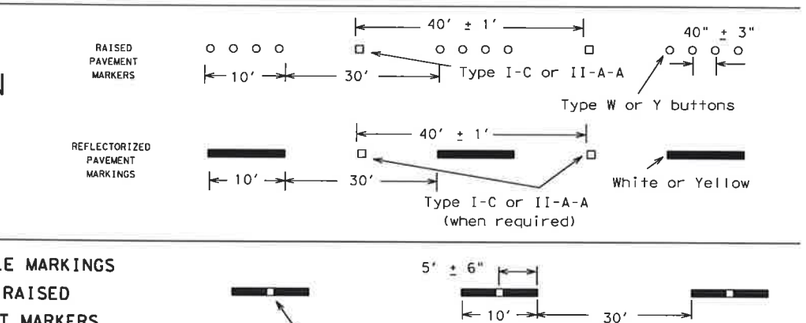

REMOVABLE MARKINGS WITH RAISED PAVEMENT MARKERS

If raised pavement markers are used to supplement REMOVABLE markings, the markers shall be applied to the top of the tape at the approximate mid length of tape used for broken lines or at 20 foot spacing for solid lines. This allows an easier removal of raised pavement markers and tape.

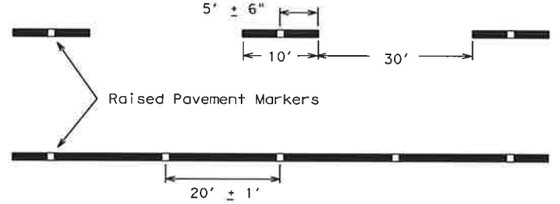

Centerline only - not to be used on edge lines

Only pre-qualified products shall be used. A copy of the "Compliant Work Zone Traffic Control Devices List" (CWZTCD) describes pre-qualified products and their sources and may be obtained by contacting:

Standards Engineer
Traffic Operations Division - TE
Texas Department of Transportation
125 East 11th Street
Austin, Texas 78701-2483
Phone (512) 416-3120
Fax (512) 416-3299

Instructions to locate the "CWZTCD" on TxDOT website are:

Start at website - www.dot.state.tx.us
Click on "About TxDOT",
Click on "Organizational Chart",
Click on Traffic Operations Box,
Click on "Compliant Work Zone Traffic Control Devices",
Click on "View PDF".
This site is printable.

Raised pavement markers used as standard pavement markings shall be from the approved products list and meet the requirements of Item "RAISED PAVEMENT MARKERS."

STANDARD PLANS
Texas Department of Transportation
Traffic Operations Division

BARRICADE AND CONSTRUCTION PAVEMENT MARKING PATTERNS STANDARD

11 of 12 BC(11)-03

© TxDOT February 1998	DN: LR	CK: DTN	DW: FDN	CK: CAL
REVISIONS 2-94 1-97 2-98 11-02	STATE DISTRICT	FEDERAL REGION 6	FEDERAL AID PROJECT	SHEET 41
	COUNTY	CONTROL	SECTION	JOB / HIGHWAY

LEVELS DISPLAYED ACC:
1 2 3 4 5 6 7 8 9 10 11 12 13 14 15 16 17 18 19 20 21 22 23 24 25 26 27 28 29 30 31 32 33 34 35 36 37 38 39 40 41 42 43 44 45 46 47 48 49 50 51 52 53 54 55 56 57 58 59 60 61 62 63

P-200612-01

DISCLAIMER:
The use of this standard is governed by the "Texas Engineering Practice Act". No warranty is made by TxDOT for any purpose whatsoever. TxDOT assumes no responsibility for the conversion of this standard to other formats or for incorrect results or damages resulting from its use.

LEVELS DISPLAYED

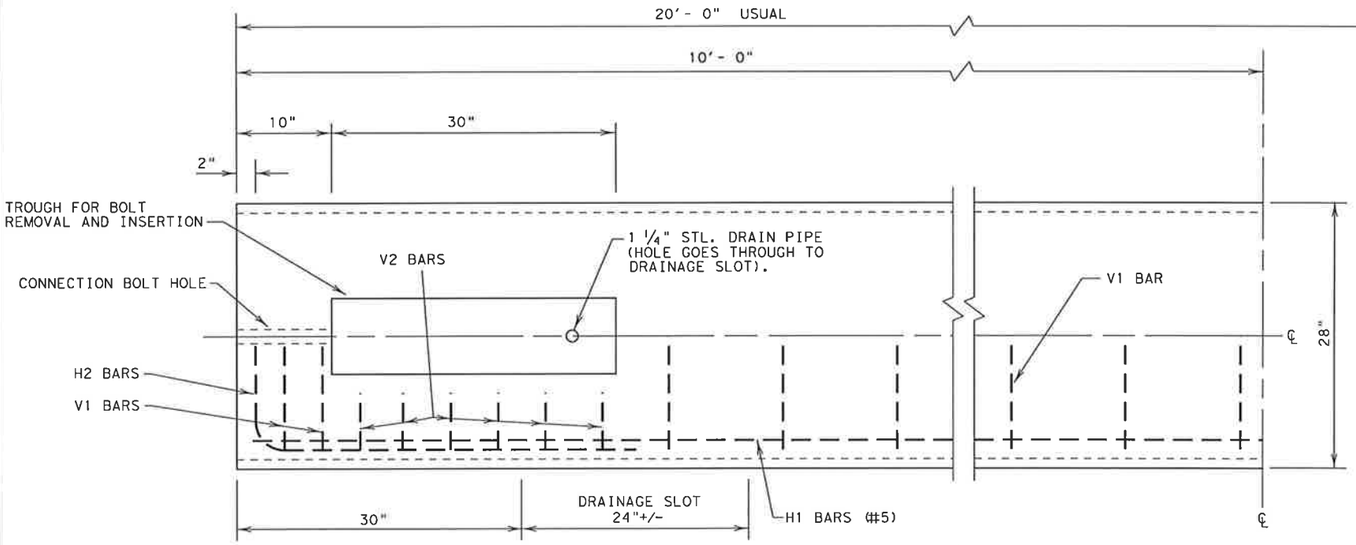

NOTE: CONCRETE ON BOTTOM HALF OF PLAN VIEW IS REMOVED IN ORDER TO SHOW DETAILS

PLAN VIEW - TYPE 1

(SYMMETRICAL ABOUT CENTER LINES)

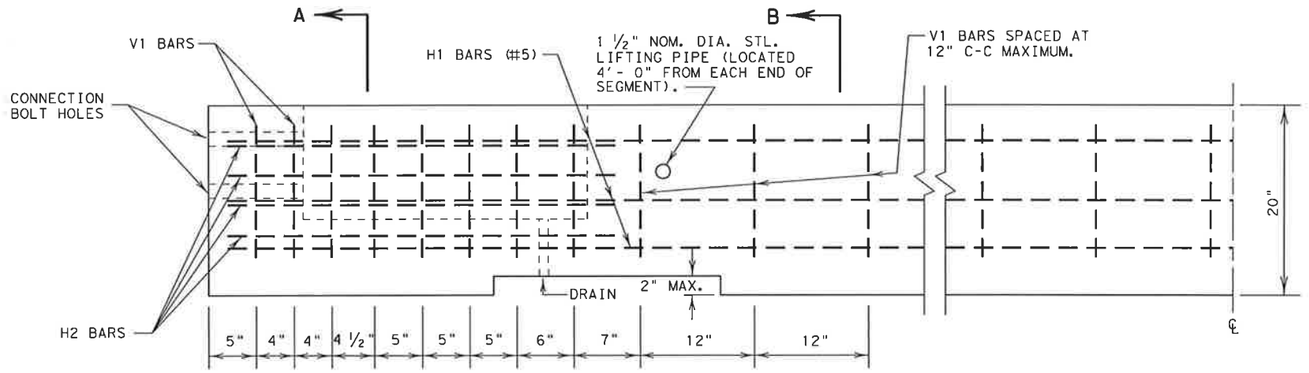

"CONSTRUCTION RECORD DRAWINGS_8-01-2009

ELEVATION - TYPE 1

(SYMMETRICAL ABOUT CENTER LINES)

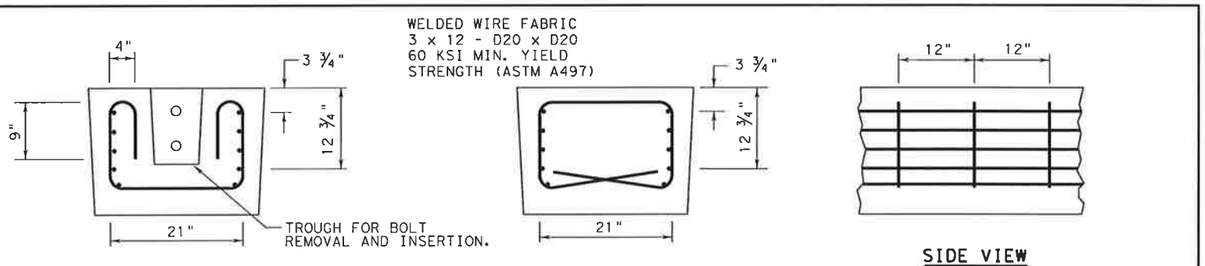

SECTION A-A

SECTION B-B

SIDE VIEW

NOTE: THIS FABRIC OPTION CAN BE USED IN PLACE OF V1, V2 AND H1 BARS. THE H2 BARS SPECIFIED ARE STILL REQUIRED.

WELDED WIRE FABRIC OPTIONAL REINFORCING

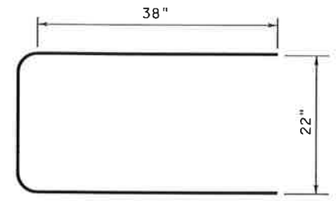

H2 BAR (#5)

(GRADE 60 MIN.)

NOTE: H2 REBAR IS TO BE BENT AT A 3" RADIUS.

NOTE: ALL BENDING OF SHEAR REBAR IS AT A 2" RADIUS, UNLESS SPECIFIED OTHERWISE.

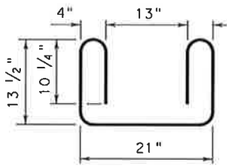

V2 BAR (#4)

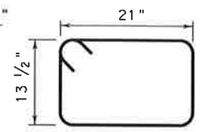

V1 BAR (#4)

REINFORCING STEEL DETAILS

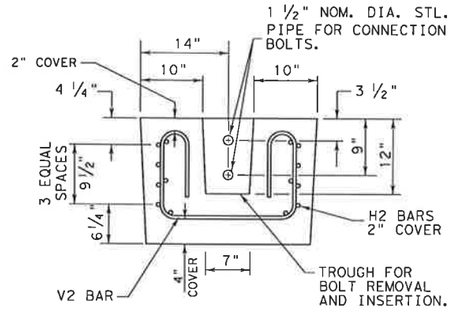

SECTION A-A

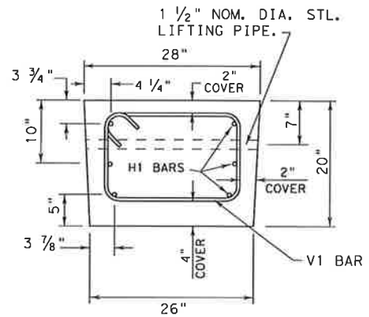

SECTION B-B

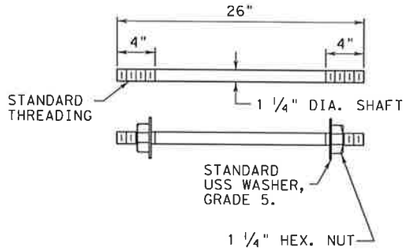

CONNECTION BOLT

FOR CONTRACTORS INFORMATION ONLY

(TYPE 1) APPROX. QUANTITIES	20 FT. SECTION	
CONCRETE	CY	2.6
REINFORCING STEEL	LBS	330
TOTAL BARRIER WT.	LBS	11000

GENERAL NOTES

1. BARRIER LENGTH SHALL BE 20 FEET (+/- 1 INCH) UNLESS OTHERWISE SPECIFIED IN THE PLANS.
2. ALL CONCRETE, REINFORCEMENT, ANCHOR BOLTS, BLOCKING, ETC., AS SHOWN ARE CONSIDERED AS PART OF THE BARRIER FOR PAYMENT.
3. ALL CONCRETE SHALL BE CLASS A, C, OR H, UNLESS OTHERWISE SPECIFIED.
4. ALL REINFORCING STEEL SHALL BE GRADE 40, UNLESS OTHERWISE SPECIFIED.
5. CHAMFER ALL EDGES 3/4 INCH, AS DIRECTED BY THE ENGINEER.
6. STEEL PIPE SHALL BE HOT DIP GALVANIZED IN CONFORMANCE TO ASTM DESIGNATION A123. BOLTS, NUTS AND WASHERS SHALL BE HOT-DIP GALVANIZED TO ASTM DESIGNATION A153.
7. BOLTS SHALL CONFORM TO ASTM A36. NUTS SHALL CONFORM TO A307 REQUIREMENTS AND SHALL BE TAPPED OR CHASED AFTER GALVANIZING. BOLTS AND NUTS SHALL HAVE CLASS 2A AND 2B FIT TOLERANCES.
8. THE BARRIER SHOULD BE LIGHT IN COLOR AND SHOULD BE SUPPLEMENTED BY DELINEATION AS DETAILED ELSEWHERE IN THE PLANS.

Texas Department of Transportation
Design Division (Roadway)

LOW PROFILE CONCRETE BARRIER

(PORTABLE AND PRECAST)

LPCB(1)-92

SHEET 1 OF 2

FILE: lpcb192.dgn	DN:	CK:	DW:	CK:	
©TxDOT September 1992	DISTRICT	FEDERAL AID PROJECT			SHEET
REVISIONS					42
	COUNTY		CONTROL	SECT	JOB	HIGHWAY

P-200612-01

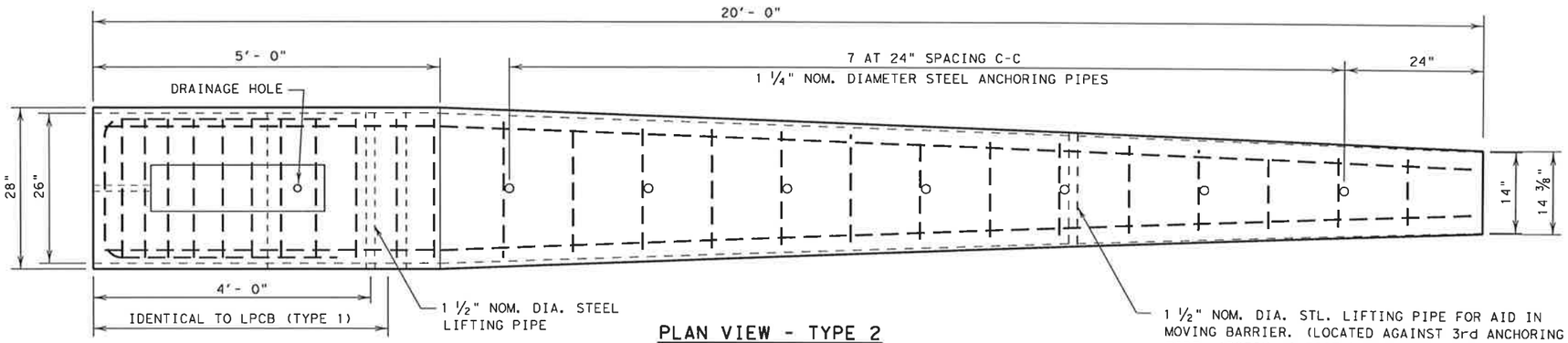

PLAN VIEW - TYPE 2

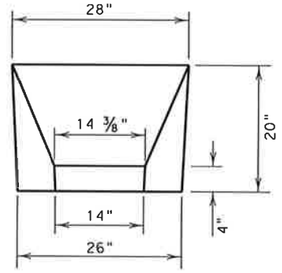

APPROACH VIEW

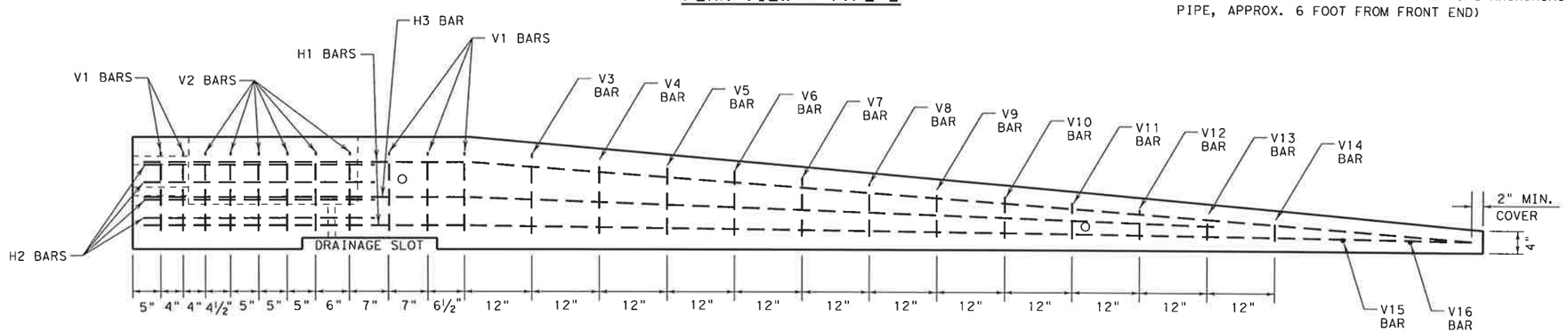

NOTE: ANCHORING PIPES NOT SHOWN

ELEVATION - TYPE 2

NOTE: ANCHORING PIPES NOT SHOWN IN ELEVATION.

GENERAL NOTES

1. TYPE 2 BARRIER SHALL BE USED AS AN END TREATMENT FOR TYPE 1 BARRIER WHEN APPROPRIATE.
2. THE ANCHORAGE PINS ARE ALL THE SAME LENGTH AND ARE INTENDED TO BE DRIVEN FLUSH WITH THE TOP OF THE BARRIER SURFACE.
3. THE BENDS IN THE H3 AND H1 BARS ARE SLIGHT, NO FORMAL BEND IS NECESSARY.
4. TYPE 2 BARRIER MUST BE LIFTED FROM REAR FIRST TO PREVENT CRACKING OF SLOPED SECTION.
5. SEE SHEET 1 OF 2 FOR ADDITIONAL INFORMATION.

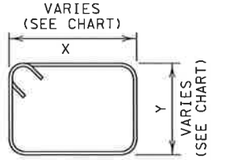

V 3-11 BARS (#4)

BAR (#4)	X (IN.)	Y (IN.)
V3 BAR	20 ¼	14 ½
V4 BAR	19 ½	13 ½
V5 BAR	18 ½	12 ¼
V6 BAR	17 ½	11 ¼
V7 BAR	17	10 ¼
V8 BAR	16 ¼	9
V9 BAR	15 ½	8
V10 BAR	14 ½	7
V11 BAR	13 ¾	6

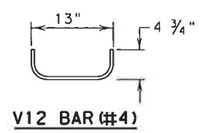

V12 BAR (#4)

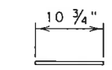

V15 BAR (#4)

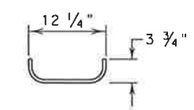

V13 BAR (#4)

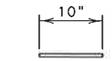

V16 BAR (#4)

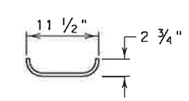

V14 BAR (#4)

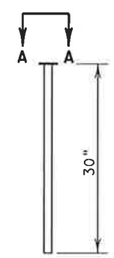

ANCHORING PIN
(1 ¼"DIA., A36 STL.)

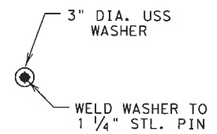

A-A
(HEAD OF ANCHORING PIN)

FOR CONTRACTORS INFORMATION ONLY

(TYPE 2) APPROX. QUANTITIES 20 FT. SECTION		
CONCRETE	CY	1.65
REINFORCING STEEL	LBS	240
TOTAL BARRIER WT.	LBS	7000

NOTE: ALL BENDING OF SHEAR REBAR IS AT A 2" RADIUS, UNLESS SPECIFIED OTHERWISE.

"CONSTRUCTION RECORD DRAWINGS_8-01-2009

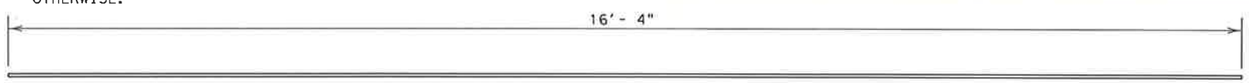

H3 BARS (#5)
(GRADE 60)

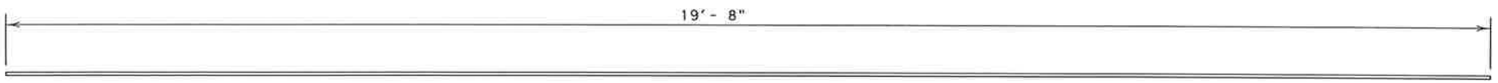

H1 BARS (#5)
(GRADE 60)

Texas Department of Transportation
Design Division (Roadway)

LOW PROFILE CONCRETE BARRIER
(PORTABLE AND PRECAST)

LPCB(2)-92

SHEET 2 OF 2

FILE: lpcb192.dgn	DN:	CK:	DW:	CK:
©TxDOT September 1992	DISTRICT	FEDERAL AID PROJECT		SHEET 43
REVISIONS	COUNTY	CONTROL	SECT	JOB	HIGHWAY

DISCLAIMER:
The use of this standard is governed by the "Texas Engineering Practice Act". No warranty of any kind is made by TxDOT for any purpose whatsoever. TxDOT assumes no responsibility for the conversion of this standard to other formats or for incorrect results or damages resulting from its use.

LEVELS DISPLAYED

P-200612-01

DISCLAIMER
The use of this standard is governed by the "Texas Engineering Practice Act". No warranty of any kind is made by TxDOT for any purpose whatsoever. TxDOT assumes no responsibility for the conversion of this standard to other formats or for incorrect results or damages resulting from its use.

LEVELS DISPLAYED
1 2 3 4 5 6 7 8 9 10 11 12 13 14 15 16
17 18 19 20 21 22 23 24 25 26 27 28 29 30 31 32
33 34 35 36 37 38 39 40 41 42 43 44 45 46 47 48
49 50 51 52 53 54 55 56 57 58 59 60 61 62 63

DATE:
ACC:
FILE:
DN:
CK:
DW:
CK:

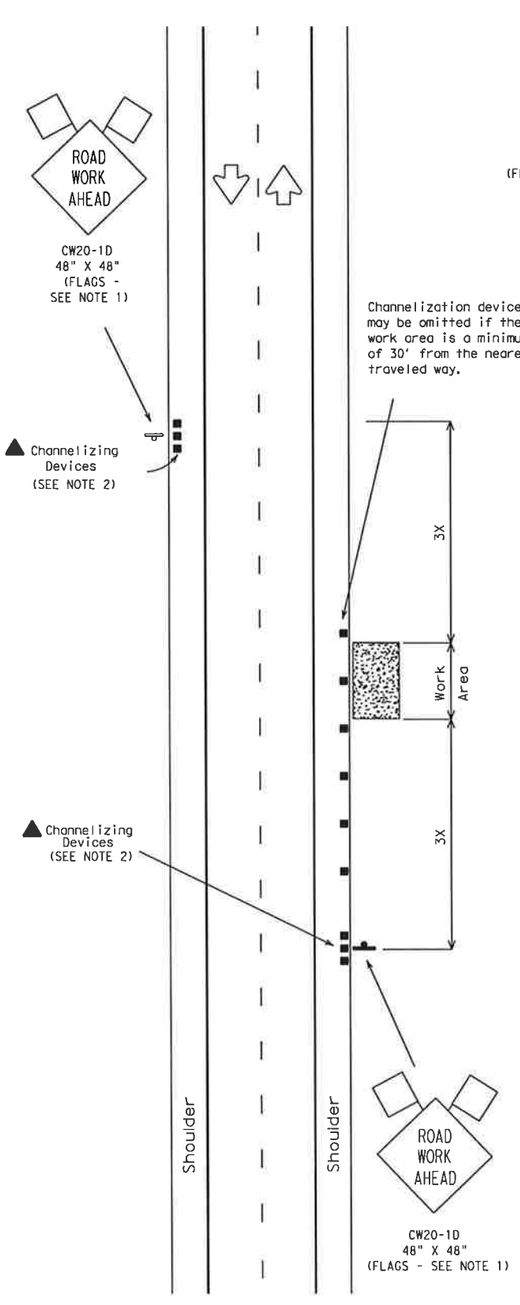

TCP (1-1a)

Work Area Near Shoulder

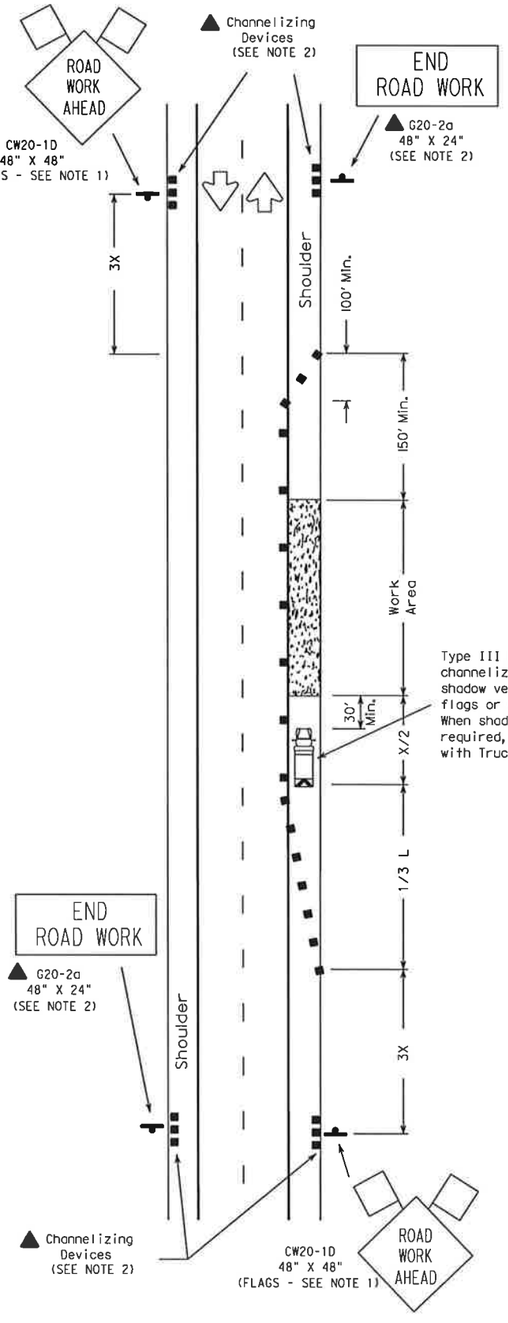

TCP (1-1b)

Work Area on Shoulder

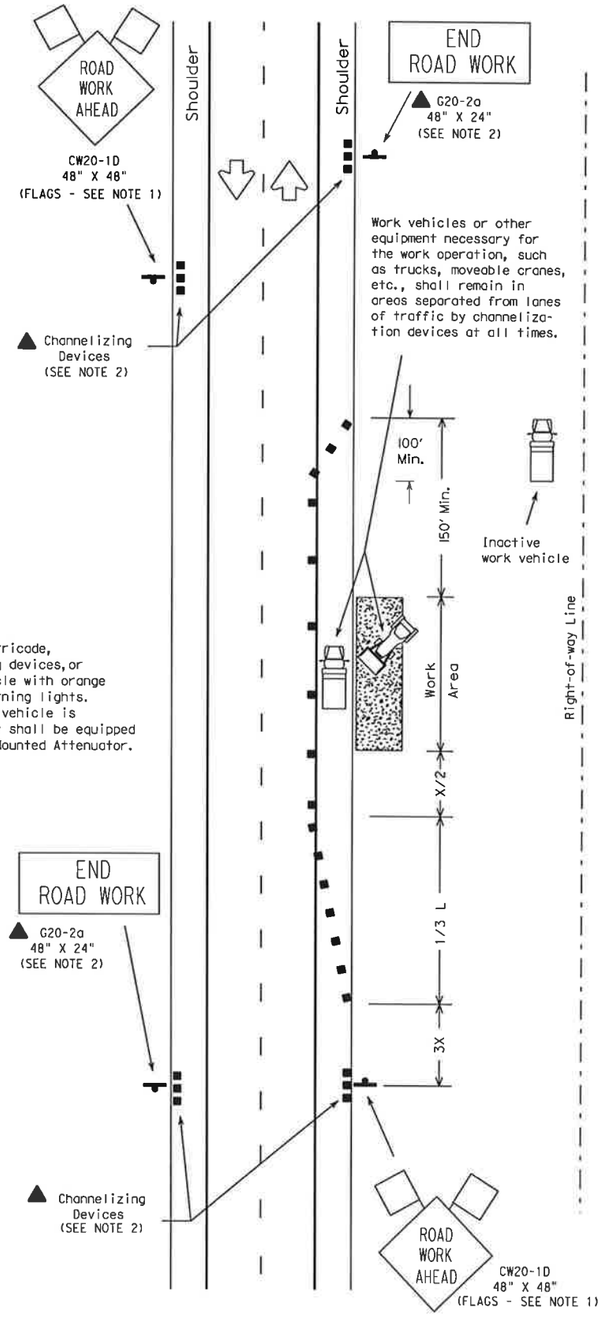

TCP (1-1c)

Work Vehicles on Shoulder

LEGEND

Type III Barricade ■ ■ Channelizing Devices Flag
Heavy Work Vehicle Truck Mounted Attenuator
Trailer Mounted Flashing Arrow Panel (M) Portable Changeable Message Sign
Flagger Sign Post

Posted Speed ✳	Formula	Minimum Desirable Taper Lengths ✳✳ 10' Offset	11' Offset	12' Offset	Suggested Maximum Spacing of Device On a Taper	On a Tangent	Minimum Sign Spacing X Distance
30	$L=\frac{WS^2}{60}$	150'	165'	180'	30'	60'-75'	120'
35		205'	225'	245'	35'	70'-90'	160'
40		265'	295'	320'	40'	80'-100'	240'
45	L=WS	450'	495'	540'	45'	90'-110'	320'
50		500'	550'	600'	50'	100'-125'	400'
55		550'	605'	660'	55'	110'-140'	500'
60		600'	660'	720'	60'	120'-150'	✳600'
65		650'	715'	780'	65'	130'-165'	✳700'
70		700'	770'	840'	70'	140'-175'	✳800'

✳ Conventional Roads Only

✳✳ Taper lengths have been rounded off.
L=Length of Taper (FT.) W=Width of Offset (FT.) S=Posted Speed (MPH)

TYPICAL USAGE: MOBILE	SHORT DURATION	SHORT TERM STATIONARY	INTERMEDIATE TERM STATIONARY	LONG TERM STATIONARY
	✓	✓		

GENERAL NOTES:

1. Unless otherwise stated in the plans, flags attached to signs are REQUIRED.
2. All traffic control devices illustrated are REQUIRED, except those denoted with the triangle symbol may be omitted when stated elsewhere in the plans.
3. On high speed facilities advance warning signs should be installed approximately 3X from the work area or from the beginning of a lane or shoulder taper. On low speed facilities the advance warning signs should be placed based on the "X" minimum distance.
4. Inactive work vehicles or other equipment should be parked near the right-of-way line and not parked on the paved shoulder.

Only pre-qualified products shall be used. A list of compliant products and their sources may be obtained by writing or faxing:

Standards Engineer
Traffic Operations Division - TE
Texas Department of Transportation
125 East 11th Street
Austin, Texas 78701-2483
Phone (512) 416-3335
Fax (512) 416-3161
E-mail TRF-STANDARD@mailgw.dot.state.tx.us

The requirement for shadow vehicles will be listed in the project GENERAL NOTES, Item 502, Barricades, Signs and Traffic Handling.

STANDARD PLANS
TEXAS DEPARTMENT OF TRANSPORTATION
Traffic Operations Division

TRAFFIC CONTROL PLAN

TCP(1-1)-98

©TxDOT December 1985 DWG - LR | CKD - MT | DW - DN | CKD - MT | REQ NO.?

REVISIONS	STATE DISTRICT	FEDERAL REGION	FEDERAL AID PROJECT	SHEET
2-94		6		44
8-95	COUNTY		CONTROL / SECTION / JOB	HIGHWAY
1-97				
4-98				

"CONSTRUCTION RECORD DRAWINGS_8-01-2009

DISCLAIMER
The use of this standard is governed by the "Texas Engineering Practice Act". No warranty of any kind is made by TxDOT for any purpose whatsoever. TxDOT assumes no responsibility for the conversion of this standard to other formats or for incorrect results or damages resulting from its use.

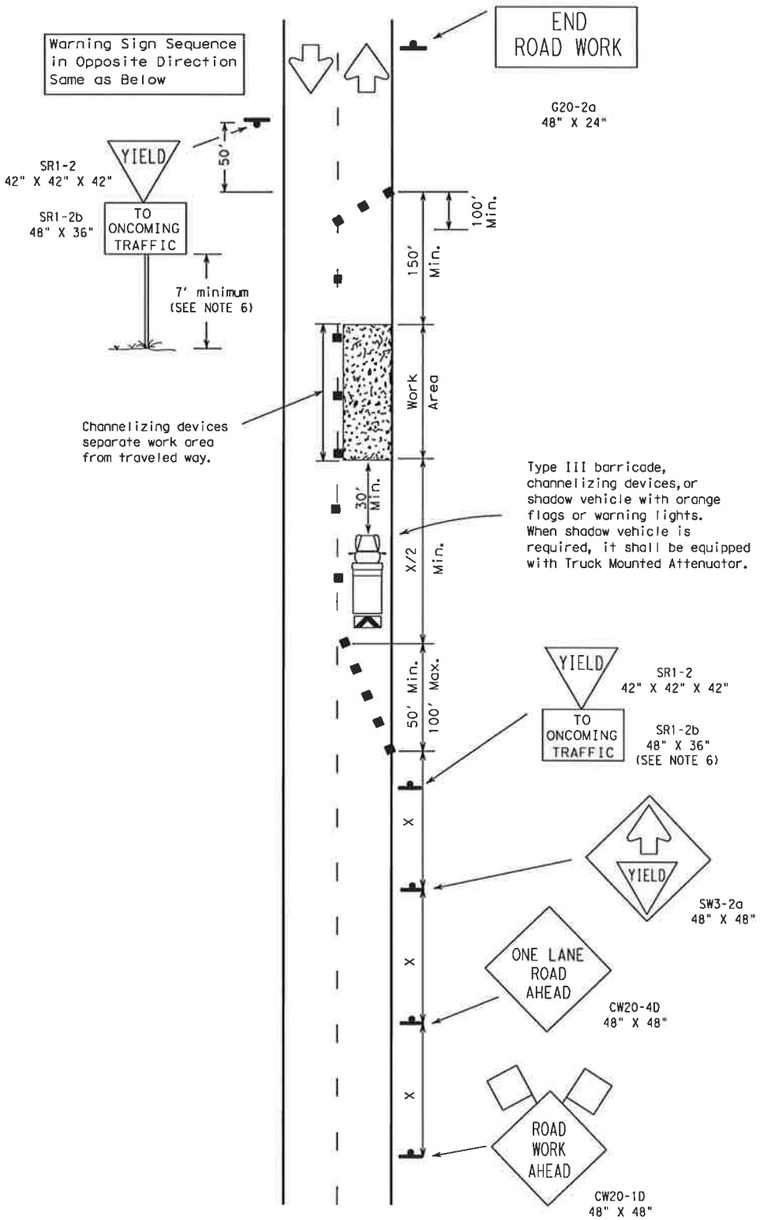

TCP (1-2a)

One Lane Closed
Adequate Field of View

The requirement for shadow vehicles will be listed in the project GENERAL NOTES, Item 502, Barricades, Signs and Traffic Handling.

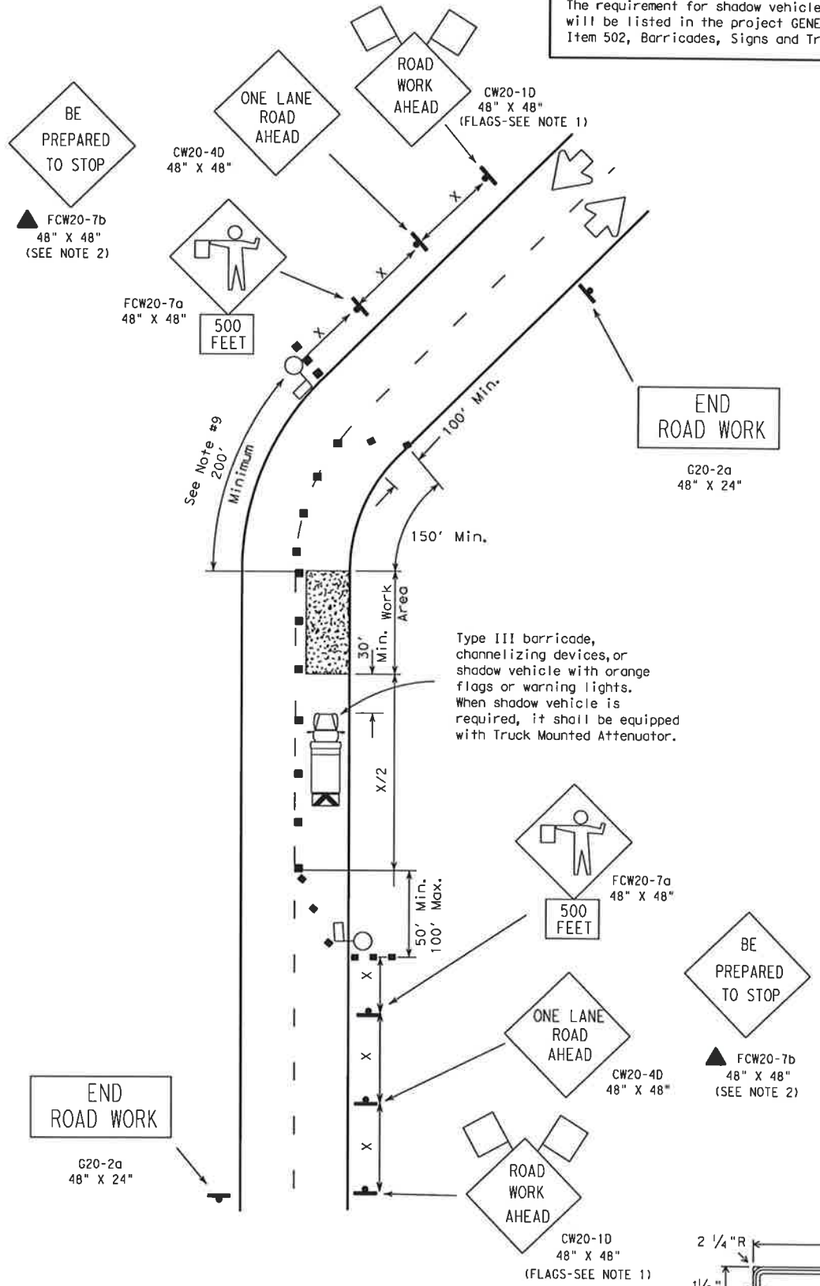

TCP (1-2b)

One Lane Closed
Inadequate Field of View

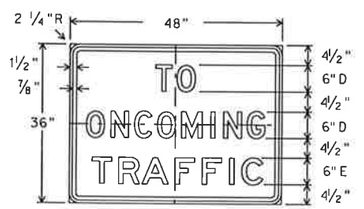

SR1-2b
48" x 36"

Letters - Black
Background - White
Reflective

LEGEND

Type III Barricade ■ ■ Channelizing Devices Flag
Heavy Work Vehicle Truck Mounted Attenuator
Trailer Mounted Flashing Arrow Panel (M) Portable Changeable Message Sign
Flagger Sign Post

Posted Speed ✳	Formula	Minimum Desirable Taper Lengths ✳✳ 10' Offset	11' Offset	12' Offset	Suggested Maximum Spacing of Device On a Taper	On a Tangent	Minimum Sign Spacing X Distance
30	$L=\frac{WS^2}{60}$	150'	165'	180'	30'	60'-75'	120'
35		205'	225'	245'	35'	70'-90'	160'
40		265'	295'	320'	40'	80'-100'	240'
45	L=WS	450'	495'	540'	45'	90'-110'	320'
50		500'	550'	600'	50'	100'-125'	400'
55		550'	605'	660'	55'	110'-140'	500'
60		600'	660'	720'	60'	120'-150'	✳600'
65		650'	715'	780'	65'	130'-165'	✳700'
70		700'	770'	840'	70'	140'-175'	✳800'

✳ Conventional Roads Only

✳✳ Taper lengths have been rounded off.
L=Length of Taper (FT.) W=Width of Offset (FT.) S=Posted Speed (MPH)

TYPICAL USAGE:				
MOBILE	SHORT DURATION	SHORT TERM STATIONARY	INTERMEDIATE TERM STATIONARY	LONG TERM STATIONARY
	✓	✓		

GENERAL NOTES:

1. Flags attached to signs are REQUIRED.
2. All traffic control devices illustrated are REQUIRED, except those denoted with the triangle symbol may be omitted when stated elsewhere in the plans.
3. The BE PREPARED TO STOP sign may be installed after the ONE LANE ROAD AHEAD sign, but proper sign spacing shall be maintained.
4. ROAD WORK AHEAD sign may be repeated if the visibility of the work zone is less than 1500'.

TCP(1-2a)

5. YIELD sign traffic control may be used on projects with approaches that have adequate sight distance. For projects in urban areas, work zones should be no longer than one half city block. In rural areas on roadways with less than 4000 ADT, work areas should be no longer than 400'.
6. YIELD TO ONCOMING TRAFFIC sign shall be placed on a support at a 7' minimum mounting height.

TCP(1-2b)

7. Flaggers should use two-way radios or other methods of communication to control traffic.
8. Length of work area should be based on the ability of flaggers to communicate.
9. Distance along curve of work area should be adequate length for motorists to identify and react to flagger signals.

Only pre-qualified products shall be used. A list of compliant products and their sources may be obtained by writing or faxing:

Standards Engineer
Traffic Operations Division - TE
Texas Department of Transportation
125 East 11th Street
Austin, Texas 78701-2483
Phone (512) 416-3335
Fax (512) 416-3161
E-mail: TRF-STANDARDS@mailgw.dot.state.tx.us

STANDARD PLANS
TEXAS DEPARTMENT OF TRANSPORTATION
Traffic Operations Division

TRAFFIC CONTROL PLAN

TCP(1-2)-98

©TxDOT December 1985	DN:-LR	CK:-MT	DW:-DN	CK:-MT	REV. NO.:
REVISIONS 4-90 2-94 1-97 4-98	STATE DISTRICT: 6	FEDERAL REGION	FEDERAL AID PROJECT		SHEET: 46
	COUNTY	CONTROL	SECTION	JOB	HIGHWAY

DN:
CK:
DW:
CK:

DATE:
ACC:
FILE:

LEVELS DISPLAYED
1 2 3 4 5 6 7 8 9 10 11 12 13 14 15 16
17 18 19 20 21 22 23 24 25 26 27 28 29 30 31 32
33 34 35 36 37 38 39 40 41 42 43 44 45 46 47 48
49 50 51 52 53 54 55 56 57 58 59 60 61 62 63

"CONSTRUCTION RECORD DRAWINGS_8-01-2009

DISCLAIMER
The use of this standard is governed by the "Texas Engineering Practice Act". No warranty of any kind is made by TxDOT for any purpose whatsoever. TxDOT assumes no responsibility for the conversion of this standard to other formats or for incorrect results or damages resulting from its use.

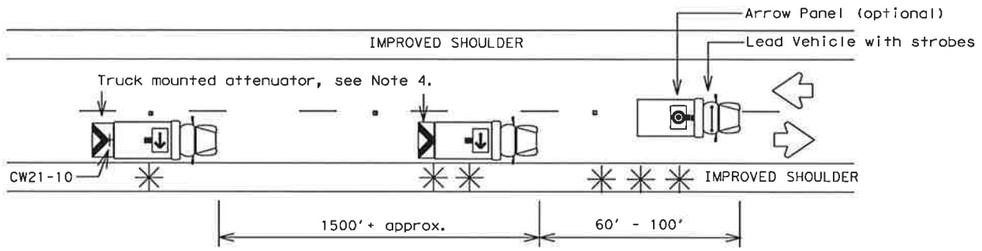

Two Lane Highway With Paved Shoulders (work on travel lane)

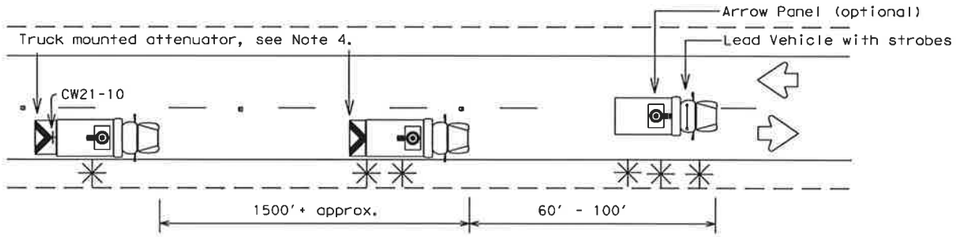

Two Lane Highway Without Paved Shoulders (work on travel lane)

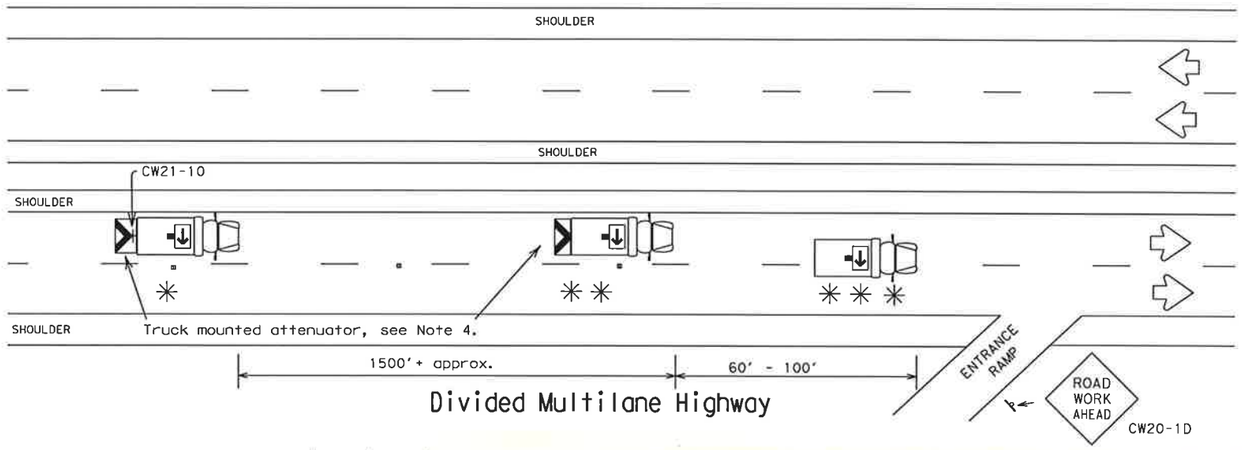

Divided Multilane Highway

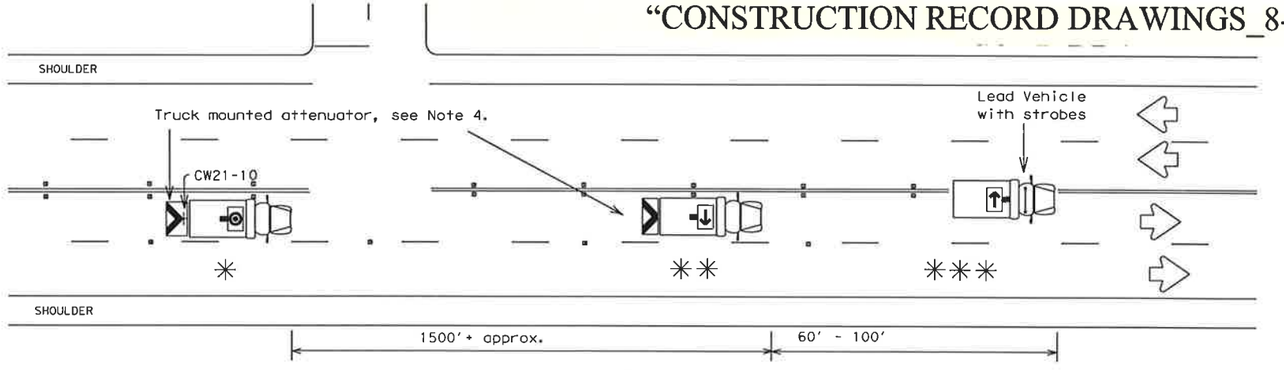

Undivided Multilane Highway

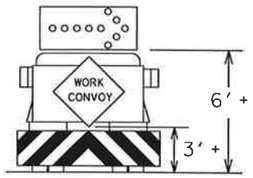

TYPICAL TRAIL VEHICLE
RIGHT Directional display
Flashing Arrow Panel

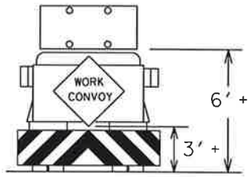

TYPICAL TRAIL VEHICLE
with (four corner flash)
CAUTION display
Flashing Arrow Panel

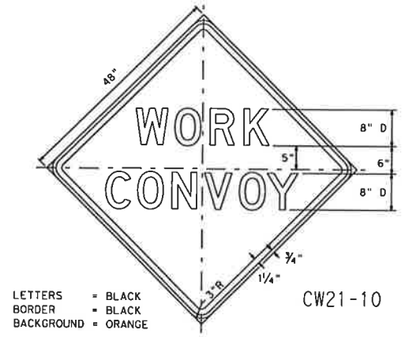

LETTERS = BLACK
BORDER = BLACK
BACKGROUND = ORANGE

CW21-10

Legend:

- * TRAIL VEHICLE
- ** SHADOW VEHICLE
- *** WORK VEHICLE
- Truck mounted attenuator
- HEAVY WORK VEHICLE

Arrow Panel Displays

- RIGHT Directional
- LEFT Directional
- RIGHT or LEFT Directional
- CAUTION mode

GENERAL NOTES:

1. TRAIL, SHADOW, LEAD, and work vehicles shall be equipped with arrow panels as illustrated. The Engineer will determine if the LEAD VEHICLE and/or TRAIL VEHICLE are required based on prevailing roadway conditions, traffic volume, and sight distance restrictions.
2. All traffic control devices shall be in accordance with the "Texas Manual on Uniform Traffic Control Devices" (TMUTCD), latest edition.
3. The use of yellow rotating beacons or strobe lights on vehicles are required unless otherwise stated elsewhere in the plans.
4. The use of truck mounted attenuators (TMA) on the SHADOW VEHICLE and the TRAIL VEHICLE are required.
5. Optional striping on the back panel of all truck mounted attenuators shall be 8" red and white reflective sheeting placed in an inverted "V" design. Reflective sheeting shall meet or exceed the reflectivity and color requirements of DEPARTMENTAL MATERIAL SPECIFICATION D-9-8300, TYPE C.
6. Flashing Arrow Panels shall be Type B or Type C as per BC Standards. The panel operation shall be controlled from inside the vehicle.
7. Each vehicle shall have two-way radio communication capability.
8. When work convoys must change lanes, the TRAIL VEHICLE should change lanes first to shadow the other convoy vehicles.
9. Vehicle spacing between TRAIL VEHICLE and SHADOW VEHICLE will vary depending on sight distance restrictions. Motorists approaching the work convoy should be able to see the TRAIL VEHICLE in time to slow down and/or change lanes as they approach the TRAIL VEHICLE.

Only pre-qualified products shall be used. A list of compliant products and their sources may be obtained by writing or faxing:

Standards Engineer
Traffic Operations Division - TE
Texas Department of Transportation
125 East 11th Street
Austin, Texas 78701-2483
Phone (512) 416-3335
Fax (512) 416-3161
E-mail TRF-STANDARD@mailgw.dot.state.tx.us

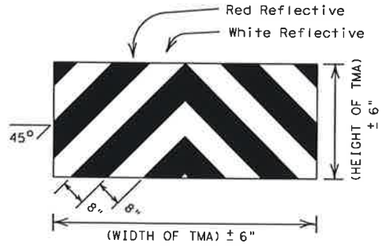

OPTIONAL STRIPING FOR TMA

STRIPING FOR TMA WILL BE REQUIRED ON ALL PROJECTS AWARDED AFTER JANUARY 1, 2000

Shadow and trail vehicle shall be equipped with Truck Mounted Attenuator.

"CONSTRUCTION RECORD DRAWINGS_8-01-2009

STANDARD PLANS
TEXAS DEPARTMENT OF TRANSPORTATION
Traffic Operations Division

TRAFFIC CONTROL PLAN MOBILE OPERATIONS RAISED PAVEMENT MARKER INSTALLATION TCP(3-3)-98

©TxDOT September 1987	DN: LR	CK:	DW: DN	CK: DM	MSG NO.:
REVISIONS 2-94 8-95 1-97 4-98	STATE DISTRICT: 6	FEDERAL REGION	FEDERAL AID PROJECT		SHEET 46
	COUNTY		CONTROL	SECTION	JOB / HIGHWAY

DN: CK: DW: CK:
DATE: FILE:
ACC:
LEVELS DISPLAYED

DISCLAIMER
The use of this standard is governed by the "Texas Engineering Practice Act". No warranty of any kind is made by TxDOT for any purpose whatsoever. TxDOT assumes no responsibility for the conversion of this standard to other formats or for incorrect results or damages resulting from its use.

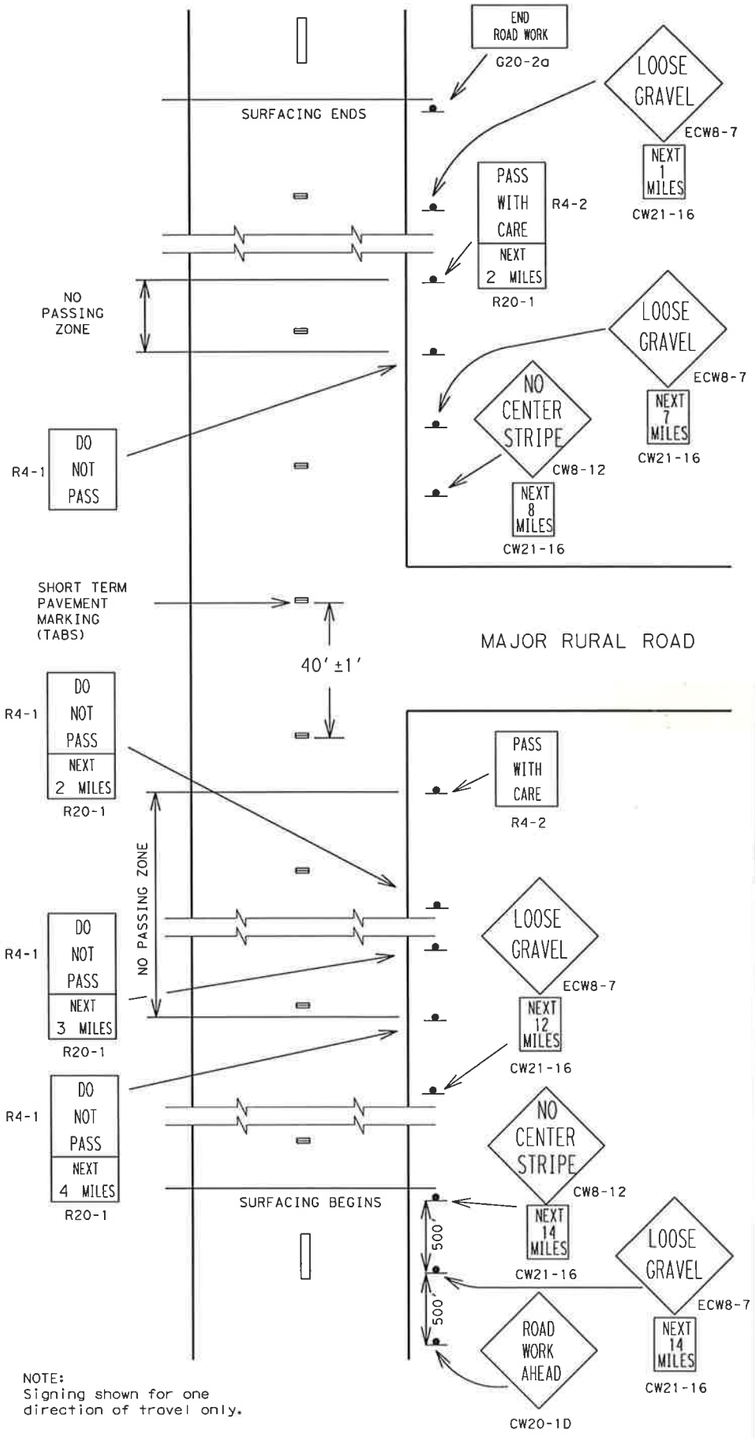

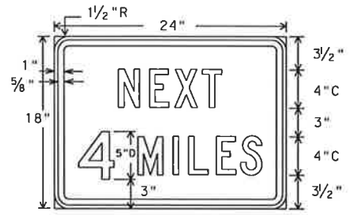

R20-1
24"x18"

Legend - Black
Border - Black
Background - White Refl.

FOR USE WITH REGULATORY SIGNS ONLY

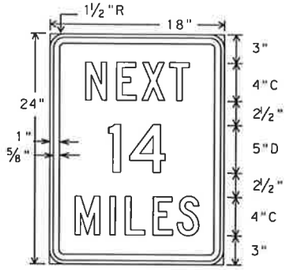

CW21-16
18"x24"

Legend - Black
Border - Black
Background - Orange Refl.

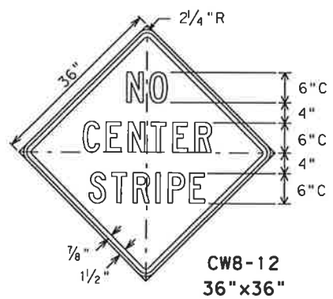

CW8-12
36"x36"

Legend - Black
Border - Black
Background - Orange Refl.

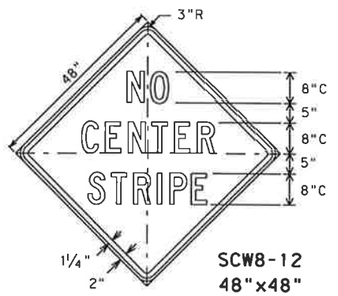

SCW8-12
48"x48"

Legend - Black
Border - Black
Background - Orange Refl.

FOR USE WITH CONSTRUCTION WARNING SIGNS ONLY

TEMPORARY FLEXIBLE-REFLECTIVE ROADWAY MARKER TABS

for surfacing projects only

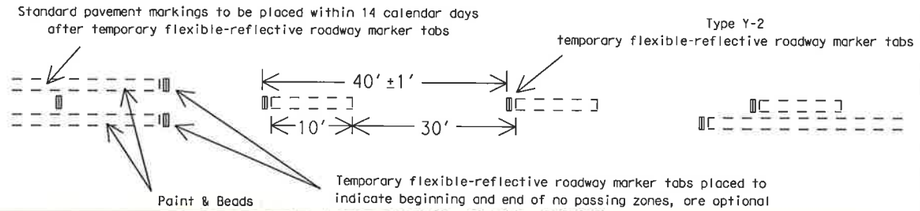

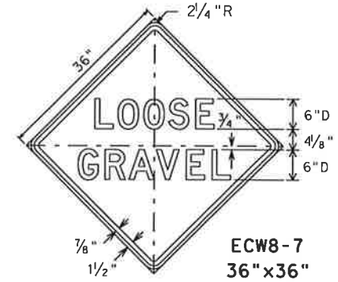

ECW8-7
36"x36"

Legend - Black
Border - Black
Background - Orange Refl.

"CONSTRUCTION RECORD DRAWINGS_8-01-2009

GENERAL NOTES

The traffic control devices detailed on this sheet will be furnished and erected as directed by the Engineer on sections of roadway where the surfacing operation has covered or obliterated existing pavement markings. These traffic control devices are to be used to supplement those required by BC Standards.

"DO NOT PASS" SIGN (R4-1) and NO-PASSING ZONES

Prior to the beginning of construction, all currently striped no-passing zones should be signed with the DO NOT PASS sign (R4-1) and PASS WITH CARE sign (R4-2) placed at the beginning and end of each zone for each direction of travel except as otherwise provided herein. Signs marking these individual no-passing zones need not be covered prior to construction if the signs supplement the existing pavement markings.

At the discretion of the Engineer, in areas of numerous no-passing zones, several zones may be combined and signed as a single zone. If passing is to be prohibited over one or more lengthy sections, a DO NOT PASS sign and a NEXT XX MILES sign (R20-1) may be used at the beginning of such zones. The DO NOT PASS and NEXT XX MILES signs should be repeated every mile to the end of the no-passing zone. In areas where there is considerable distance between no-passing zones, the end of a no-passing zone may be signed with a PASS WITH CARE and NEXT XX MILES sign.

Depending on traffic volumes and length of sections, it may be desirable to prohibit passing throughout the project to prevent damage to windshields and lights. The DO NOT PASS and NEXT XX MILES sign should be used and repeated as often as necessary for this purpose. Where several existing zones are to be combined into one individual no-passing zone, the sign at the beginning of the zone should be covered until the surfacing operation has passed this location so as not to have the DO NOT PASS sign conflict with existing pavement markings. Also, unless one days operation completes the entire length of such combined zones, care must be taken to place DO NOT PASS and PASS WITH CARE signs in order to sign the beginning and end of the no-passing zones in the area where the surfacing operation has stopped for the day.

R4-1 and R4-2 signs should be mounted on fixed supports as detailed on BC Standards. These signs are to remain in place until standard pavement markings are placed.

"NO CENTER STRIPE" SIGN (CW21-15)

At the time construction activity obliterates the existing centerline (low volume roads may not have an existing centerline), a NO CENTER STRIPE sign (CW8-12) should be erected at each end of the work area and just beyond major rural intersections and other location deemed necessary by the Engineer. Where possible, the signs erected at each end of the work area should be located in such a manner that drivers can read the sign and immediately see the change to no centerline. The NO CENTER STRIPE sign should be supplemented with the NEXT XX MILES sign (CW21-16) mounted below it.

The NO CENTER STRIPE sign should be erected as detailed on BC Standards. These signs are to remain in place until standard pavement markings are placed.

"LOOSE GRAVEL" SIGN (ECW8-7)

When construction begins, a LOOSE GRAVEL sign (ECW8-7) should be erected at each end of the work area and repeated at intervals of approximately two (2) miles in rural areas and closer in urban areas. The LOOSE GRAVEL sign should be supplemented with the NEXT XX MILES sign (CW21-16) mounted below it.

The LOOSE GRAVEL sign should be erected as detailed on BC Standards. They should remain in place until the loose gravel condition no longer exists.

PAVEMENT MARKINGS

Short term pavement markings for surfacing projects shall use Temporary Flexible-reflective Roadway Marker Tabs. Tabs are to be installed to provide true alignment for striping crews or as directed by the Engineer. Tabs will be placed at the spacing indicated. Tabs should be applied to the pavement no more than two (2) days before the surfacing is applied. After the surfacing is rolled and swept the cover over the reflective strip shall be removed. Tabs shall NOT be used to simulate edge lines.

Only pre-qualified products shall be used. A list of compliant products and their sources may be obtained by writing or faxing:

Standards Engineer
Traffic Operations Division - TE
Texas Department of Transportation
125 East 11th Street
Austin, Texas 78701-2483
Phone (512) 416-3335
Fax (512) 416-3161
E-mail TRF-STANDARD@mailgw.dot.state.tx.us

TYPICAL USAGE:				
MOBILE	SHORT DURATION	SHORT TERM STATIONARY	INTERMEDIATE TERM STATIONARY	LONG TERM STATIONARY
	✓	✓	✓	✓

STANDARD PLANS
TEXAS DEPARTMENT OF TRANSPORTATION
Traffic Operations Division

TRAFFIC CONTROL DETAILS for SURFACING OPERATIONS

TCP(7-1)-98

© TxDOT March 1991	DN: LR	CK: MT	DW: DN	CK:	REQ NO.:
REVISIONS 4-92 1-97 4-98	STATE DISTRICT	FEDERAL REGION 6	FEDERAL AID PROJECT		SHEET 47
	COUNTY	CONTROL	SECTION	JOB	HIGHWAY

DN:
CK:
DW:
CK:
DATE:
ACC:
FILE:

LEVELS DISPLAYED
1 2 3 4 5 6 7 8 9 10 11 12 13 14 15 16
17 18 19 20 21 22 23 24 25 26 27 28 29 30 31 32 33
33 34 35 36 37 38 39 40 41 42 43 44 45 46 47 48
49 50 51 52 53 54 55 56 57 58 59 60 61 62 63

DISCLAIMER
The use of this standard is governed by the "Texas Engineering Practice Act". No warranty of any kind is made by TxDOT for any purpose whatsoever. TxDOT assumes no responsibility for the conversion of this standard to other formats or for incorrect results or damages resulting from its use.

Divided Highway

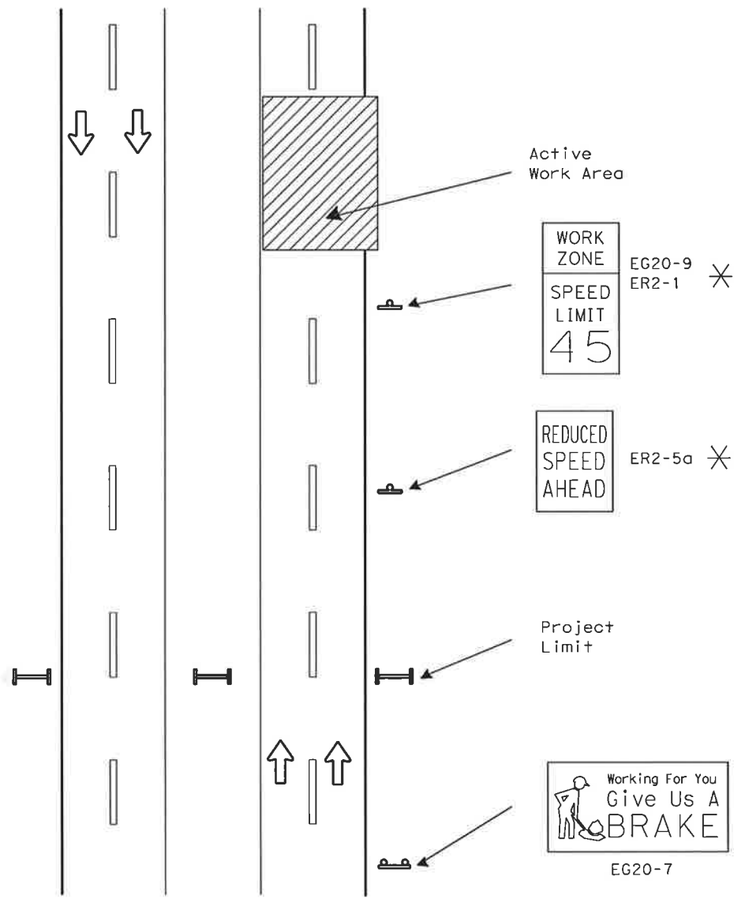

Undivided Highway

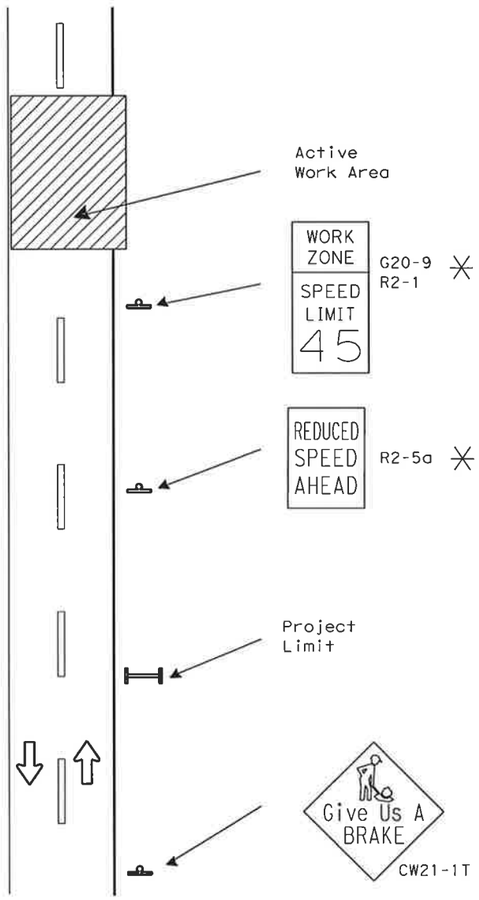

SIGNS ARE SHOWN FOR ONE DIRECTION OF TRAVEL

✳ Posted only when reduced speed is directed by the Engineer

SUMMARY OF LARGE SIGNS

BACKGROUND COLOR	SIGN DESIGNATION	SIGN TEXT	SIGN DIMENSIONS	REFLECTIVE SHEETING	PLY TY A (SQ FT)	GALVANIZED STRUCT STEEL Size	GALVANIZED STRUCT STEEL (LF) ①	GALVANIZED STRUCT STEEL (LF) ②	DRILLED SHAFT 24" DIA. (LF)
Orange	EG20-7	Give Us A BRAKE	16' x 8'	Type E	128	W8x18	16	17	12
Orange	G20-7	Give Us A BRAKE	8' x 4'	Type E	32	S4x7.7	12	13	7✳

✳ 12" Non-reinforced Concrete Footing (LF)

SUMMARY OF SMALL SIGNS

BACKGROUND COLOR	SIGN DESIGNATION	SIGN TEXT	SIGN DIMENSIONS	REFLECTIVE SHEETING	PLY TY A (SQ FT)
Orange	EG20-9	WORK ZONE	36" x 24"	Type E	6
Orange	G20-9	WORK ZONE	24" x 18"	Type E	3
White	ER2-1	SPEED LIMIT	36" x 48"	Type C	12
White	ER2-5a	REDUCED SPEED AHEAD	36" x 48"	Type C	12
Orange	CW21-1T	GIVE US A BRAKE	48" x 48"	Type E	16

DEPARTMENTAL MATERIAL SPECIFICATIONS

PLYWOOD SIGN BLANKS	DMS-7100
ALUMINUM SIGN BLANKS	DMS-7110
FLAT SURFACE REFLECTIVE SHEETING	DMS-8300
VINYL NON-REFLECTIVE SHEETING	DMS-8320

COLOR	USAGE	SHEETING MATERIAL
WHITE	BACKBROUND	TYPE C (HIGH SPECIFIC INTENSITY)
ORANGE	BACKGROUND	TYPE E (FLUORESCENT PRISMATIC)
BLACK	LEGEND & BORDERS	VINYL NON-REFLECTIVE SHEETING

GENERAL NOTES:

1. See BC and SMD sheets for additional sign support details.
2. Sign locations shall be approved by the Engineer.
3. For projects more than two miles in length, Give Us a BRAKE and WORK ZONE SPEED LIMIT signs should be repeated halfway through the project.
4. The WORK ZONE (G20-9) sign is to be installed in combination with a SPEED LIMIT (R2-1) sign.
5. Speed limits shall be regulatory and approved by the Transportation Commission.
6. EG20-9, G20-9, ER2-1, R2-1, ER2-5a, R2-5a and CW21-1T signs and supports shall be considered subsidiary to Item 502, "Barricades, Signs and Traffic Handling."
7. G20-7 and EG20-7 signs shall be paid for under the following bid items:
   Item 634 Plywood Signs Type A
   Item 647 Large Roadside Sign Supports
   Item 656 Foundations for Signs, Traffic Signals and Roadway Ill. Assem.
8. All signs shall be constructed in accordance with the details found in the "Standard Highway Sign Designs for Texas," latest edition. Sign details not shown in this manual shall be shown in the plans or the Engineer shall provide a detail to the Contractor before the sign is manufactured.

LEVELS DISPLAYED
1 2 3 4 5 6 7 8 9 0 11 12 13 14 15 16
17 18 19 20 21 22 23 24 25 26 27 28 29 30 31 32
33 34 35 36 37 38 39 40 41 42 43 44 45 46 47 48
49 50 51 52 53 54 55 56 57 58 59 60 61 62 63
ACC:

"CONSTRUCTION RECORD DRAWINGS_8-01-2009

STANDARD PLANS
TEXAS DEPARTMENT OF TRANSPORTATION
Traffic Operations Division

WORK ZONE "GIVE US A BRAKE" SIGNS

WZ(BRK)-03

© TxDOT August 1995	DN: LR	CK:	DW: DN	CK:	REG NO.:
REVISIONS 6-96, 8-96, 5-98, 3-03	STATE DISTRICT	FEDERAL REGION	FEDERAL AID PROJECT		SHEET 48
		6			
	COUNTY		CONTROL	SECTION	JOB / HIGHWAY

P-200612-01

DISCLAIMER
The use of this standard is governed by the "Texas Engineering Practice Act". No warranty of any kind is made by TxDOT for any purpose whatsoever. TxDOT assumes no responsibility for the conversion of this standard to other formats or for incorrect results or damages resulting from its use.

TYPICAL DEAD END BARRICADE INSTALLATION

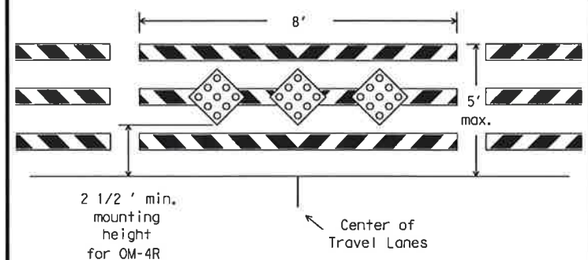

Barricade striping is red and white sloping toward the center of the roadway. (See Note 1)

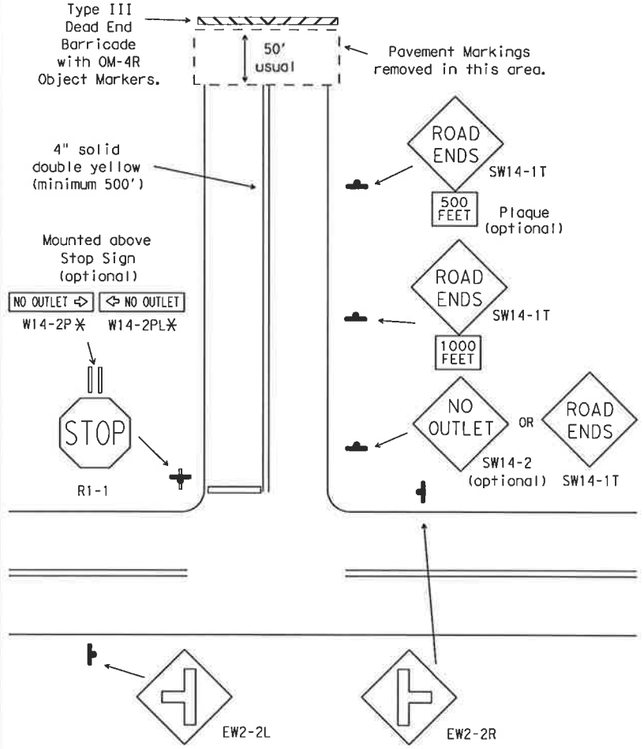

* W14-1P DEAD END plaque may be used as an alternate.

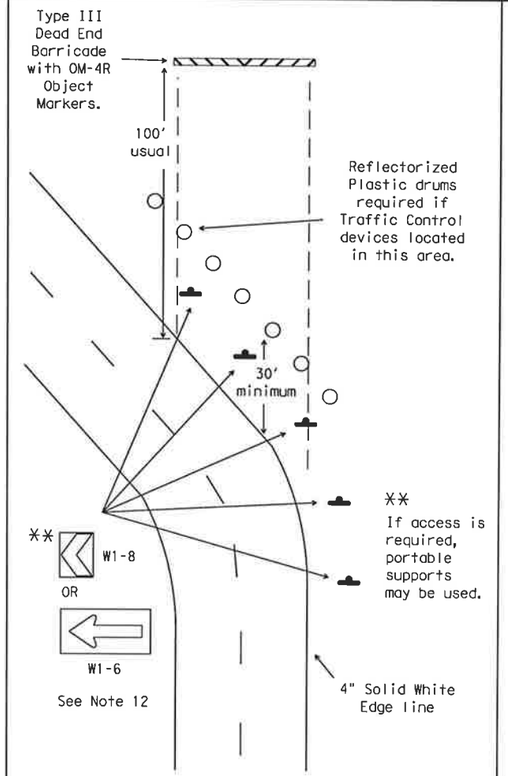

Devices shown for one direction of travel

DEPARTMENTAL MATERIAL SPECIFICATIONS	
PLYWOOD SIGN BLANKS	DMS-7100
ALUMINUM SIGN BLANKS	DMS-7110
SIGN HARDWARE	DMS-7120
WINGED CHANNEL POSTS	DMS-7130
FLAT SURFACE REFLECTIVE SHEETING	DMS-8300
VINYL NON-REFLECTIVE DECAL SHEETING	DMS-8320
DELINEATORS AND OBJECT MARKERS	DMS-8600

COLOR	USAGE	SHEETING MATERIAL
RED	BACKGROUND	TYPE C (HIGH SPECIFIC INTENSITY)
WHITE	BACKGROUND	TYPE C (HIGH SPECIFIC INTENSITY)
YELLOW	BACKGROUND	TYPE C (HIGH SPECIFIC INTENSITY)
BLACK	LEGEND & BORDERS	VINYL NON-REFLECTIVE SHEETING

GENERAL NOTES:

1. Barricade striping shall be red and white reflective sheeting for all permanent road closures. Orange and white reflective sheeting may be substituted for locations where duration of road closure is expected to be 18 months or less, or when approved by the Engineer. Red and orange reflective sheeting shall not be combined on barricades or locations.
2. Barricades shall be designed and constructed to Compliant Work Zone Traffic Control Device List (CWZTCD) standards in a first-class workmanship manner of clean sound material. Components made of lumber shall be painted with a minimum of two coats of white paint to ensure thorough coverage and a uniform white color. Barricade striping material shall meet the color and retroreflective requirements of Departmental Material Specification DMS-8300, Type C.
3. Post type breakaway supports shall be used as barricade supports. Barricades may be fabricated with "skid" supports if approved by the Engineer. Skid supports should be anchored using sand bags to prevent movement. For construction details of post (fixed Type III barricades) see CWZTCD list Part D.2.f. The dead end road barricades may also be anchored to the pavement using the bolt down median anchor manufactered by Universal Anchor System shown on SMD(FRP). The barricades shall be built using FRP posts and approved rails as shown on the CWZTCD List.
4. Barricades shall not be placed parallel to traffic unless a minimum adequate clear zone of 30 feet from edge of travel lane is provided.
5. A minimum of one 8-foot wide barricade and three OM-4R object markers shall be required for all locations. Barricades shall extend across all travel lanes and shoulders if shoulders are present. Barricades may be extended to the ROW as directed by Engineer.
6. Stockpiled materials shall not be placed on traffic side of barricades.
7. OM-4 object markers shall be mounted to the middle rail using two 1/2" through bolts with flat washers and lock washers.
8. OM-4 object markers shall be constructed of 0.063 aluminum and shall meet the color and reflective requirements of DMS-8300 Type C and DMS-8600.
9. Plastic drums shall meet the requirements as listed on the CWZTCD list or the BC Standards. Plastic drums may be anchored with adhesive to prevent movement.
10. All signs and chevrons shall be installed with hardware and support at the minimum mounting height in accordance with the SMD and BC Standards. Signs shall be mounted at a 7 foot minimum height. Signs shall not be attached to barricades.
11. Motorists should be able to see at least three chevron signs as they approach the curve and as they drive through the curve from either direction.
12. Delineation devices such as the chevron or large arrow signs shall only be placed on the outside portion of a curve.

GENERAL NOTE FOR SIGNS:

1. The alphabets and lateral spacing between letters and numerals shall conform with the "Texas Manual on Uniform Traffic Control Devices for Streets and Highways" (TMUTCD), latest edition, and any approved changes thereto.
2. Lateral spacing of text shall provide a balanced appearance.
3. All materials shall conform to Departmental Material Specifications.
4. Legend shall be black and applied by screening process, cut-out vinyl non-reflective sheeting or combination thereof.
5. Sign blanks shall be any material that meets the DMS requirements for permenant sign substrates.

Only pre-qualified products shall be used. A copy of the "Compliant Work Zone Traffic Control Devices List" (CWZTCD) describes pre-qualified products and their sources and may be obtained by contacting:

Standards Engineer
Traffic Operations Division - TE
Texas Department of Transportation
125 East 11th Street
Austin, Texas 78701-2483
Phone (512) 416-3120
Fax (512) 416-3299

Instructions to locate the "CWZTCD" on TxDOT website are:

Start at website - www.dot.state.tx.us
Click on "About TxDOT",
Click on "Organizational Chart",
Click on Traffic Operations Box,
Click on "Compliant Work Zone Traffic Control Devices",
Click on "View PDF".
This site is printable.

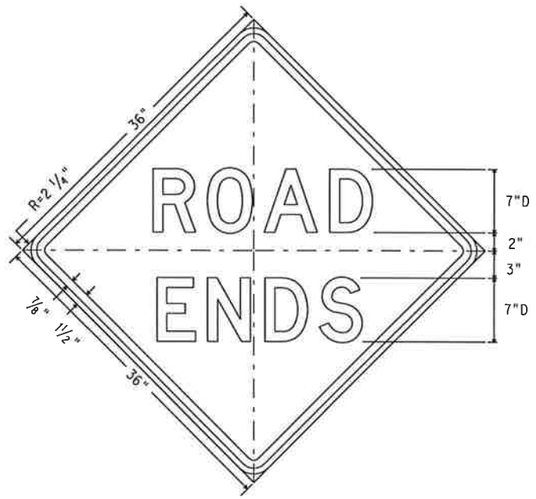

SW14-1T
36" X 36"

Letters - Black
Border - Black
Background - Yellow Refl.

"CONSTRUCTION RECORD DRAWINGS_8-01-2009

STANDARD PLANS
Texas Department of Transportation
Traffic Operations Division

WORK ZONE
DEAD END
ROADWAY DETAILS

WZ(DERD)-03

© TxDOT August 1995	DN: - LR/MT	CK: - GRB	DW: - FDN	CK: - CAL
REVISIONS 1-97 2-98 4-98 3-03	STATE DISTRICT:	FEDERAL AID PROJECT:		SHEET: 49
	6			
COUNTY:	CONTROL:	SECTION:	JOB:	HIGHWAY:

LEVELS DISPLAYED ACC:
1 2 3 4 5 6 7 8 9 10 11 12 21 31 41 51 61
17 18 19 20 21 22 23 24 25 26 27 28 29 30 31 32
33 34 35 36 37 38 39 40 41 42 43 44 45 46 47 48
49 50 51 52 53 54 55 56 57 58 59 60 61 62 63

DISCLAIMER
The use of this standard is governed by the "Texas Engineering Practice Act". No warranty of any kind is made by TxDOT for any purpose whatsoever. TxDOT assumes no responsibility for the conversion of this standard to other formats or for incorrect results or damages resulting from its use.

WORK ZONE SHORT TERM PAVEMENT MARKINGS DETAILS

SOLID LINES

DOUBLE NO-PASSING LINE

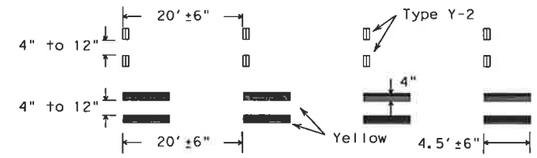

SINGLE NO-PASSING LINE or CHANNELIZATION LINE

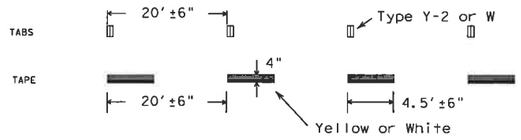

BROKEN LINE

(FOR CENTER LINE OR LANE LINE.)

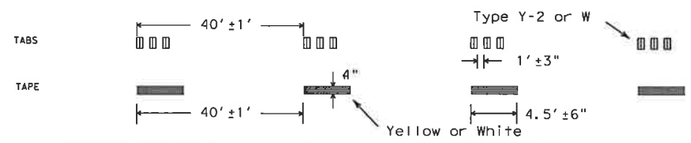

NOTES:

1. Short term pavement markings may be prefabricated markings (stick down tape) or temporary flexible-reflective roadway marker tabs unless otherwise specified elsewhere in plans.
2. Short term pavement markings shall NOT be used to simulate edge lines.
3. Dimensions indicated on this sheet are typical and approximate. Variations in size and height may occur between markers or devices made by manufacturers, by as much as 1/4 inch, unless otherwise noted.
4. Temporary flexible-reflective roadway marker tabs will require normal maintenance replacement when used on roadways with an ADT per lane of up to 7500 vehicles with no more than 10% truck mix. When roadways exceed these values, additional maintenance replacement of devices should be planned.
5. No segment of roadway open to traffic shall remain without permanent pavement markings for a period greater than 14 calendar days. The Contractor will be responsible for maintaining short term pavement markings until permanent pavement markings are in place. When the Contractor is responsible for placement of permanent pavement markings, no segment of roadway shall remain without permanent pavement markings for a period greater than 14 calendar days unless weather conditions prohibit placement. Permanent pavement markings shall be placed as soon as weather permits.
6. For two lane, two-way roadways, DO NOT PASS signs shall be erected to mark the beginning of sections where passing is prohibited and PASS WITH CARE signs shall be erected to mark the beginning of sections where passing is permitted. Signs shall be in accordance with the "Texas Manual on Uniform Traffic Control Devices" (TMUTCD) and may be used to indicate the limits of no-passing zones for up to 14 calendar days. Permanent pavement markings should then be placed.
7. For low volume two lane, two-way roadways of 4000 ADT or less, no-passing lines may be omitted when approved by the Engineer. DO NOT PASS and PASS WITH CARE signs shall be erected (see note 6).

TEMPORARY FLEXIBLE-REFLECTIVE ROADWAY MARKER TABS (TABS)

1. Temporary flexible-reflective roadway marker tabs detailed on this sheet will be designated Type Y-2 (two amber reflective surfaces with yellow body); Type Y (one amber reflective surface with yellow body); and Type W (one white or silver reflective surface with white body). Additional details may be found on BC(10).
2. Tabs shall meet requirements of Departmental Material Specification DMS-8242.
3. When dry, tabs shall be visible for a minimum distance of 200 feet during normal daylight hours and when illuminated by automobile low-beam head light at night, unless sight distance is restricted by roadway geometrics.
4. No two consecutive tabs nor four tabs per 1000 feet of line shall be missing or fail to meet the visual performance requirements of Note 3.

REMOVABLE - PREFABRICATED PAVEMENT MARKINGS

1. Removable prefabricated pavement markings shall meet the requirements of DMS-8241. A list of prequalified products can be found at the following web site:
   ftp://ftp.dot.state.tx.us/pub/txdot-info/gsd/pdf/pavemark.pdf

NON REMOVABLE - PREFABRICATED PAVEMENT MARKINGS

1. Non-removable prefabricated pavement markings (foil back) shall meet the requirements of DMS-8240 or the TXDOT Purchase Specification No. 550-74-89. A list of prequalified products and a copy of the TXDOT Purchase Specifications can be found at web sites:
   ftp://ftp.dot.state.tx.us/pub/txdot-info/gsd/pdf/pavement.pdf
   ftp://ftp.dot.state.tx.us/pub/txdot-info/gsd/pdf/tss/tss377.pdf

RAISED PAVEMENT MARKERS

1. All raised pavement markers used for work zone markings shall meet the requirements of Item 672, "RAISED PAVEMENT MARKERS" and Departmental Material Specification DMS-4200.
2. A list of prequalified reflective raised pavement markers can be found at the following web site:
   ftp://ftp.dot.state.tx.us/pub/txdot-info/gsd/pdf/dms4200preq.pdf

WORK ZONE SHORT TERM PAVEMENT MARKINGS PATTERNS

CENTER LINE & NO-PASSING ZONE BARRIER LINES FOR TWO LANE TWO-WAY HIGHWAYS

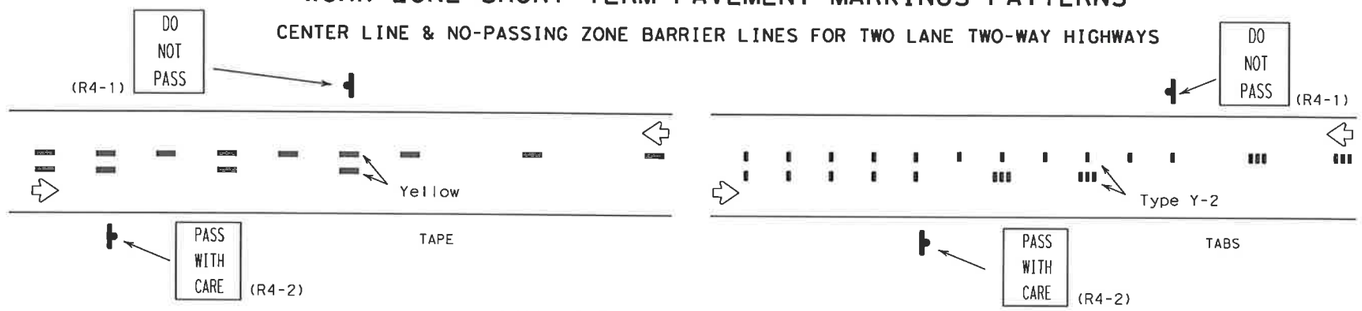

LANE LINES FOR DIVIDED HIGHWAY

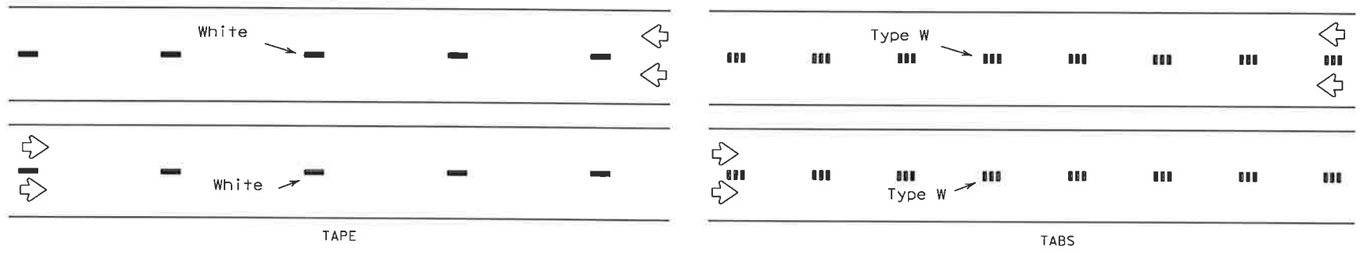

LANE & CENTER LINES FOR MULTILANE UNDIVIDED HIGHWAYS

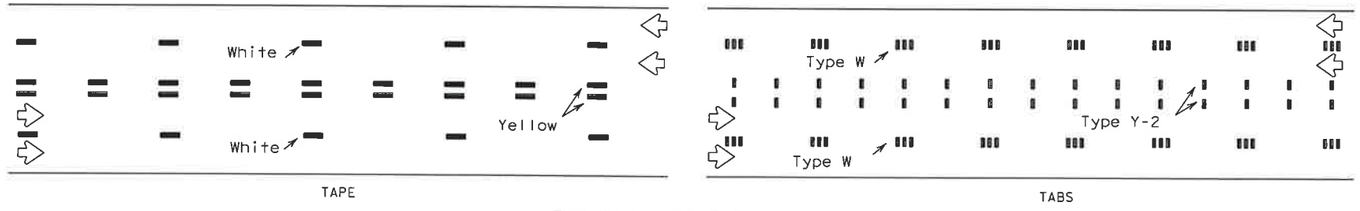

TWO-WAY LEFT TURN LANE

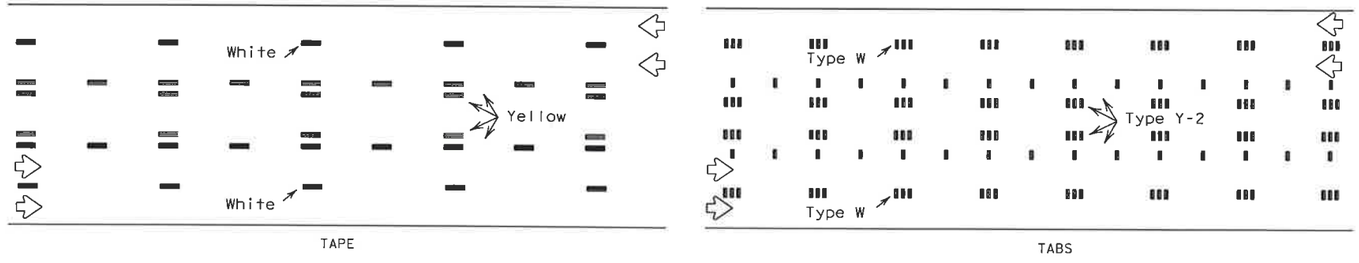

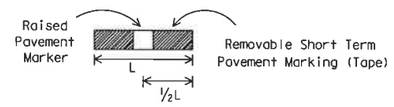

If raised pavement markers are used to supplement REMOVABLE short term markings, the markers shall be applied to the top of the tape at the approximate mid length of the tape. This allows an easier removal of raised markers and tape.

DEPARTMENT MATERIAL SPECIFICATIONS

PREFABRICATED PAVEMENT MARKINGS-PERMANENT	DMS-8240
PREFABRICATED PAVEMENT MARKINGS-REMOVABLE	DMS-8241
TEMPORARY FLEXIBLE-REFLECTIVE ROADWAY MARKER TABS	DMS-8242
PAVEMENT MARKERS (REFLECTORIZED)	DMS-4200

STANDARD PLANS
TEXAS DEPARTMENT OF TRANSPORTATION
Traffic Operations Division

WORK ZONE SHORT TERM PAVEMENT MARKINGS

WZ(STPM)-03

© TxDOT April 1992	DN: LR	CK:	DW: DN	CK: MT	MSG NO.:
REVISIONS 1-97 3-03	STATE DISTRICT	FEDERAL REGION 6	FEDERAL AID PROJECT		SHEET 50
	COUNTY		CONTROL	SECTION	JOB / HIGHWAY

"CONSTRUCTION RECORD DRAWINGS_8-01-2009

LEVELS DISPLAYED
1 2 3 4 5 6 7 8 9 10 11 12 13 14 15 16
17 18 19 20 21 22 23 24 25 26 27 28 29 30 31 32
33 34 35 36 37 38 39 40 41 42 43 44 45 46 47 48
49 50 51 52 53 54 55 56 57 58 59 60 61 62 63
ACC:

DISCLAIMER
The use of this standard is governed by the "Texas Engineering Practice Act". No warranty of any kind is made by TxDOT for any purpose whatsoever. TxDOT assumes no responsibility for the conversion of this standard to other formats or for incorrect results or damages resulting from its use.

CHANNELIZING DEVICES FOR URBAN ROADWAY TYPE PROJECT

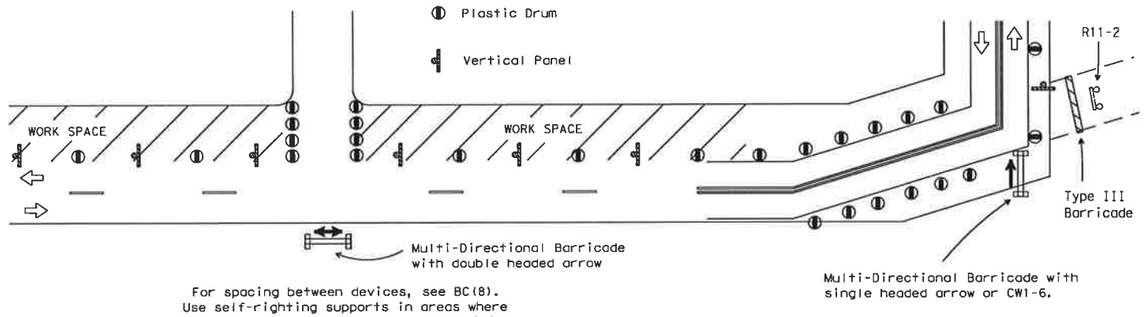

For spacing between devices, see BC(8).
Use self-righting supports in areas where there is a high potential for channelizing devices to be struck.

BARRIER DELINEATION WITH SAFETY GLARE FENCE

"CONSTRUCTION RECORD DRAWINGS 8-01-2009

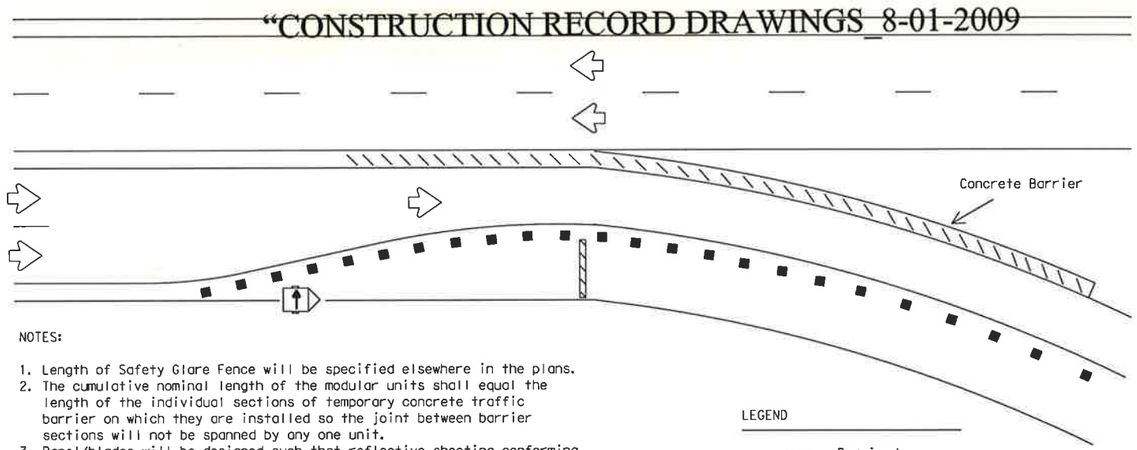

NOTES:

1. Length of Safety Glare Fence will be specified elsewhere in the plans.
2. The cumulative nominal length of the modular units shall equal the length of the individual sections of temporary concrete traffic barrier on which they are installed so the joint between barrier sections will not be spanned by any one unit.
3. Panel/blades will be designed such that reflective sheeting conforming with Departmental Material Specification DMS-8300, Flat Surface Reflective Sheeting, Type C (High Specific Intensity), minimum size of 2 inches by 12 inches can be attached to the edge of the panel/blade. The sheeting shall be attached to one panel/blade per section of concrete barrier not to exceed a spacing of 30 feet. Barrier reflectors are not necessary when panel/blades are installed.
4. Moduler Glare Screens for head light barrier shall meet the requirements of DMS-8610.

LEGEND

- Barricade
- Channelizing devices
- Trailer mounted flashing arrow panel
- Safety glare fence

MULTI-DIRECTIONAL BARRICADE

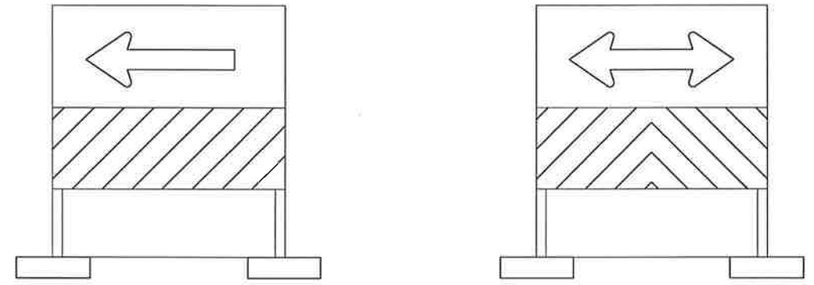

Single Headed Arrow — Double Headed Arrow

1. Multi-directional barricade shall not be used for lane closures.
2. May be used for sharp changes in alignment, or across roadway from stem of "T" intersection.
3. Typically used for Intermediate Term Stationary, Short Term Stationary or Short Duration work zone operations.
4. See the CWZTCD List for approved designs.

USAGE OF CW1-6, ECW1-6a AND CW1-8 SIGNS

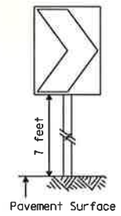

CW1-8

The CHEVRON sign (CW1-8) may be used to replace roadside delineation on curves or used in transitions or tapers.

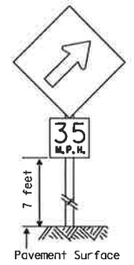

ECW1-6a

An UPWARD SLOPING ARROW sign (ECW1-6a) is intended to be used to indicate the beginning of a curve or transition. It should be preceded with an appropriate curve sign when needed, and should not be used throughout the curve or transition. Advisory speed plaque is optional.

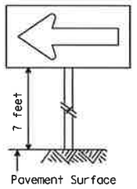

CW1-6

A LARGE ARROW sign (CW1-6) is intended to be used to give notice of a sharp change in alignment (turn) in the direction of travel. It should be preceded with an appropriate advance construction warning turn sign.

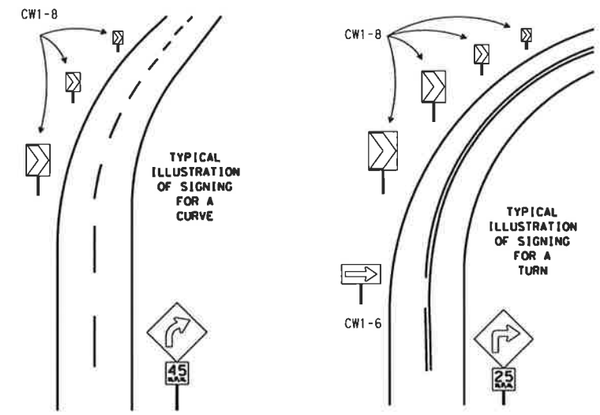

NOTES:

1. CW1-6, ECW1-6a & CW1-8 signs shall be mounted on fixed supports.
2. Chevrons, when used, shall be erected on the outside of a sharp curve or turn, or on the far side of an intersection. They shall be in line with and at right angles to approaching traffic. Spacing should be such that the motorist always has three in view, until the change in alignment eliminates its need.
3. For two-way traffic, use same arrangement of signs on outside of curve for each direction of travel.
4. Appropriate advance warning CURVE or TURN sign with Advisory Speed plaque should be used when needed.

Only pre-qualified products shall be used. A copy of the "Compliant Work Zone Traffic Control Devices List" (CWZTCD) describes pre-qualified products and their sources and may be obtained by contacting:

Standards Engineer
Traffic Operations Division - TE
Texas Department of Transportation
125 East 11th Street
Austin, Texas 78701-2483
Phone (512) 416-3120
Fax (512) 416-3299

Instructions to locate the "CWZTCD" on TxDOT website are:

Start at website - www.dot.state.tx.us
Click on "About TxDOT",
Click on "Organizational Chart",
Click on Traffic Operations Box,
Click on "Compliant Work Zone Traffic Control Devices",
Click on "View PDF".
This site is printable.

PREQUALIFICATION PROCEDURES ARE OBTAINED FROM:

CONSTRUCTION DIVISION-MATERIALS AND TESTS SECTION
TEXAS DEPARTMENT OF TRANSPORTATION (TxDOT)
125 EAST 11th STREET
AUSTIN, TX 78701-2483

DEPARTMENTAL MATERIAL SPECIFICATIONS

FLAT SURFACE REFLECTIVE SHEETING	DMS-8300
DELINEATORS AND OBJECT MARKERS	DMS-8600
MODULER GLARE SCREENS	DMS-8610

COLOR	USAGE	SIGN SHEETING
ORANGE	BACKGROUND	TYPE E (FLUORESCENT PRISMATIC)
WHITE	BACKGROUND	TYPE C (HIGH SPECIFIC INTENSITY)
BLACK	LEGEND & BORDERS	VINYL NON-REFLECTIVE SHEETING

REFER TO THE BC SHEETS FOR SHEETING REQUIREMENT ON CHANNELIZING DEVICES.

The five categories of work duration and their time at a location shall be:

A. Long-term stationary is work that occupies a location more than 3 days.

B. Intermediate-term stationary is work that occupies a location more than one daylight period up to 3 days, or nighttime work lasting more than 1 hour.

C. Short-term stationary is daytime work that occupies a location for more than 1 hour, but less than 12 hours.

D. Short duration is work that occupies a location up to 1 hour.

E. Mobile is work that moves intermittently or continuously.

STANDARD PLANS
TEXAS DEPARTMENT OF TRANSPORTATION
Traffic Operations Division

TRAFFIC CONTROL PLAN TYPICAL DETAILS

WZ(TD)-03

©TxDOT February 1998

DN: LR	CK: DTN	DW: DN	CK: GB	REQ NO.:

REVISIONS	STATE DISTRICT	FEDERAL REGION	FEDERAL AID PROJECT	SHEET
4-98		6		51
3-03	COUNTY	CONTROL	SECTION	JOB / HIGHWAY

LEVELS DISPLAYED ACC:

1	2	3	4	5	6	7	8	9	10	11	12	13	14	15	16
17	18	19	20	21	22	23	24	25	26	27	28	29	30	31	32
33	34	35	36	37	38	39	40	41	42	43	44	45	46	47	48
49	50	51	52	53	54	55	56	57	58	59	60	61	62	63	

P-200612-01

DISCLAIMER
The use of this standard is governed by the "Texas Engineering Practice Act". No warranty of any kind is made by TxDOT for any purpose whatsoever. TxDOT assumes no responsibility for the conversion of this standard to other formats or for incorrect results or damages resulting from its use.

ACC:

LEVELS DISPLAYED

1	2	3	4	5	6	7	8	9	10	11	12	31	41	51	61	
17	18	19	20	21	22	23	24	25	26	27	28	29	30	31	32	
33	34	35	36	37	38	39	40	41	42	43	44	45	46	47	48	
95	05	15	25	35	45	55	65	75	85	95	06	16	26	36		

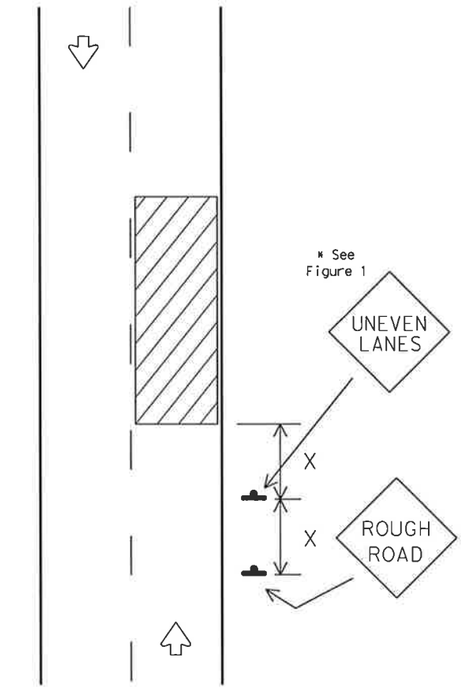

Signing shown for one direction.

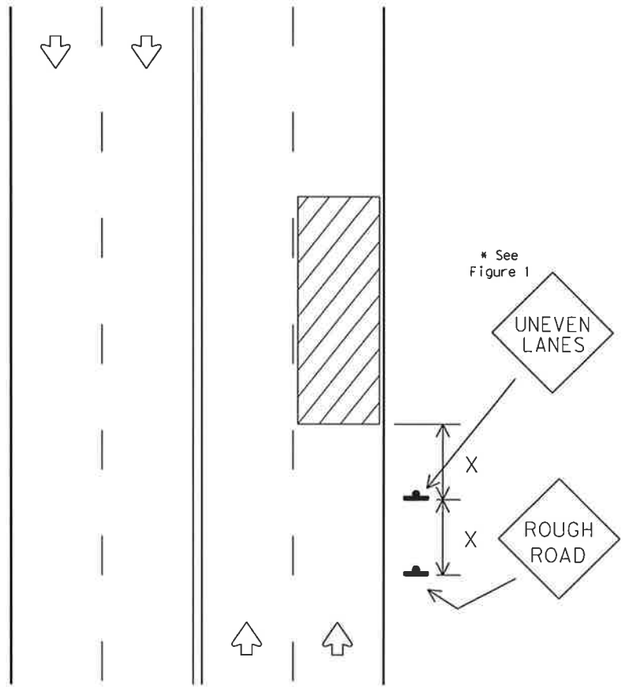

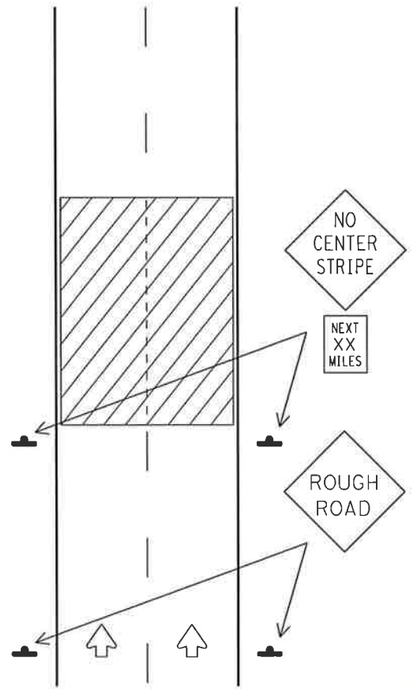

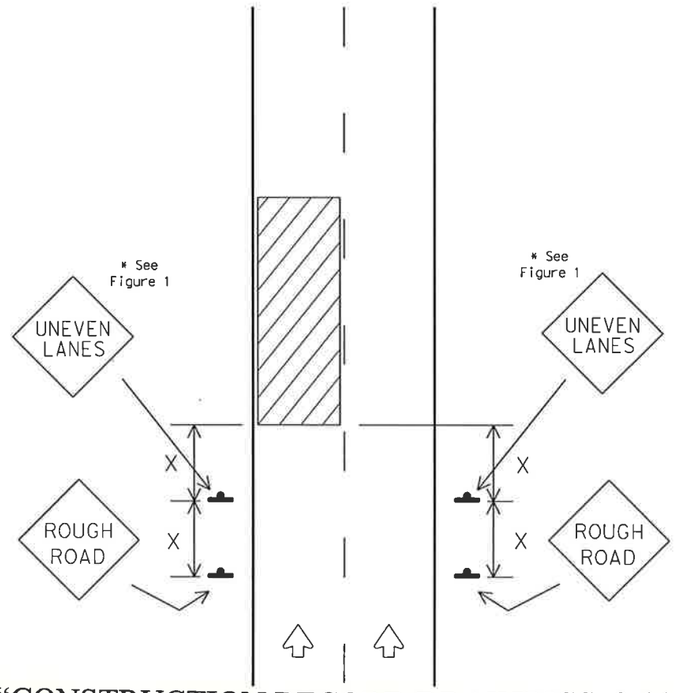

"X" distance - See Note 4 on this page.

DEPARTMENTAL MATERIAL SPECIFICATIONS	
PLYWOOD SIGN BLANKS	DMS-7100
ALUMINUM SIGN BLANKS	DMS-7110
SIGN HARDWARE	DMS-7120
PREFABRICATED PAVEMENT MARKINGS-PERMANENT	DMS-8240
PREFABRICATED PAVEMENT MARKINGS-REMOVABLE	DMS-8241
FLAT SURFACE REFLECTIVE SHEETING	DMS-8300
VINYL NON-REFLECTIVE DECAL SHEETING	DMS-8320

COLOR	USAGE	SHEETING MATERIAL
ORANGE	BACKGROUND	TYPE E (FLUORESCENT PRISMATIC)
BLACK	LEGEND & BORDERS	VINYL NON-REFLECTIVE DECAL SHEETING

GENERAL NOTES:

1. If spalling or holes occur, ROUGH ROAD signs should be placed in advance of the condition and may be repeated throughout the project.
2. UNEVEN LANES sign (CW8-11) should be installed in advance of the condition and repeated every mile. Signs installed along the uneven lane condition may be supplemented with the NEXT XX MILES sign (CW21-16) or Advisory Speed sign (CW13-1).
3. NO CENTER STRIPE signs (CW8-12) should be installed if centerlines or lane lines are obscured or obliterated. The signs should remain in place until permanent pavement markings are installed.
4. Signs shall be spaced at the distances recommended as per BC standards.
5. When operations are completed and final surface treatment will not be applied as part of this project, advance signs shall be left in place and become the property of the State. These signs shall be installed on approved permanent sign supports as per TxDOT standards. Additional signs may be required as directed by the Engineer. Minimum mounting height of signs is 7 feet. Signs shall remain in place until final surface is applied. Signs shall be considered subsidiary to the Item "BARRICADES, SIGNS AND TRAFFIC HANDLING."
6. Pavement markings shall be replaced as operations proceed.
7. Short term markings shall not be used to simulate edge lines.
8. All signs shall be constructed in accordance with the details found in the "Standard Highway Sign Designs for Texas," latest edition. Sign details not shown in this manual shall be shown in the plans or the Engineer shall provide a detail to the Contractor before the sign is manufactured.

TRAFFIC CONTROL DURING PLANING, OVERLAY AND LEVELING OPERATIONS ARE SHOWN ELSEWHERE IN THE PLANS.

FIGURE 1

Edge Condition	Edge Height (D)	Warning Devices
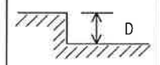	less than or equal to 1" greater than 1" to: 1¼" (maximum-planing) 1½" (typical-overlay)	Signs: ECW8-8 Signs: CW8-11, ECW8-8

Distance "D" may be a maximum of 1¼" for planing operations and 2" for overlay operations if uneven lanes are open to traffic after work operations cease.

STANDARD PLANS
TEXAS DEPARTMENT OF TRANSPORTATION
Traffic Operations Division

SIGNING FOR UNEVEN LANES

WZ(UL)-03

©TxDOT April 1992	DN: MT	CK: -	DW: DN	CK: MT	REQ NO.:

REVISIONS	STATE DISTRICT	FEDERAL REGION	FEDERAL AID PROJECT	SHEET
8-95		6		52
1-97				
2-98	COUNTY	CONTROL	SECTION	JOB	HIGHWAY
3-03					

"CONSTRUCTION RECORD DRAWINGS_8-01-2009

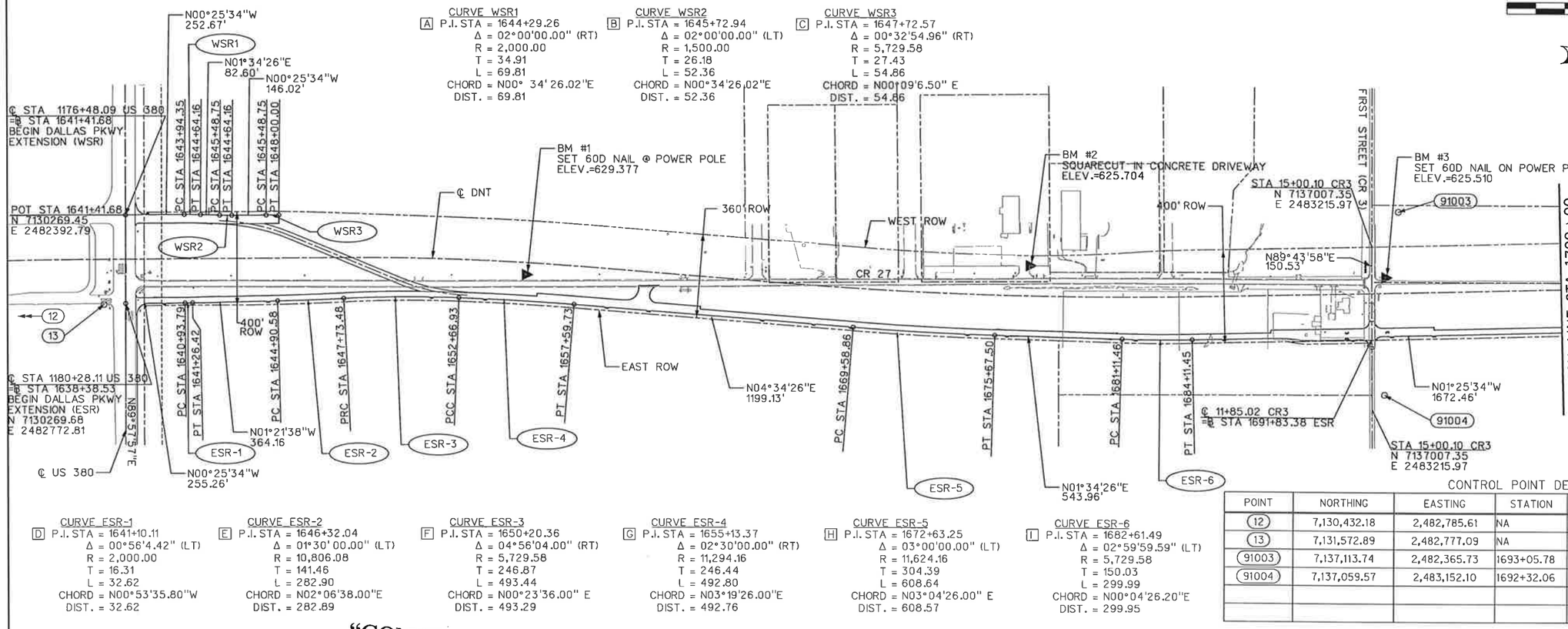

P.I. COORDINATES

PT.	NORTHING	EASTING
A	7,131,953.70	2,482,390.65
B	7,132,097.34	2,482,394.59
C	7,132,296.97	2,482,393.11
D	7,132,937.93	2,482,770.79
E	7,132,459.72	2,482,758.40
F	7,132,847.57	2,482,739.02
G	7,133,340.56	2,482,756.87
H	7,135,084.94	2,482,896.42
I	7,135,084.94	2,482,896.42
J	7,138,019.38	2,482,875.63
K	7,138,518.73	2,482,843.20
L	7,140,789.62	2,482,786.44
M	7,141,298.97	2,482,793.99
N	7,142,293.51	2,482,769.24

CONTROL POINT DESCRIPTIONS

POINT	NORTHING	EASTING	STATION	OFFSET	ELEVATION	DESCRIPTION
(12)	7,130,432.18	2,482,785.61	NA	NA	623.52	DNT MONUMENT 12
(13)	7,131,572.89	2,482,777.09	NA	NA	629.99	DNT MONUMENT 13
(91003)	7,137,113.74	2,482,365.73	1693+05.78	532.29 ' LT	619.68	SIR 1/2 RED*TP* CAP
(91004)	7,137,059.57	2,483,152.10	1692+32.06	252.49 ' RT	622.71	SIR 1/2 RED*TP* CAP

CURVE WSR1
A P.I. STA = 1644+29.26
Δ = 02°00'00.00" (RT)
R = 2,000.00
T = 34.91
L = 69.81
CHORD = N00° 34' 26.02"E
DIST. = 69.81

CURVE WSR2
B P.I. STA = 1645+72.94
Δ = 02°00'00.00" (LT)
R = 1,500.00
T = 26.18
L = 52.36
CHORD = N00°34'26.02"E
DIST. = 52.36

CURVE WSR3
C P.I. STA = 1647+72.57
Δ = 00°32'54.96" (RT)
R = 5,729.58
T = 27.43
L = 54.86
CHORD = N00°09'6.50" E
DIST. = 54.86

CURVE ESR-1
D P.I. STA = 1641+10.11
Δ = 00°56'4.42" (LT)
R = 2,000.00
T = 16.31
L = 32.62
CHORD = N00°53'35.80"W
DIST. = 32.62

CURVE ESR-2
E P.I. STA = 1646+32.04
Δ = 01°30' 00.00" (LT)
R = 10,806.08
T = 141.46
L = 282.90
CHORD = N02°06'38.00"E
DIST. = 282.89

CURVE ESR-3
F P.I. STA = 1650+20.36
Δ = 04°56'04.00" (RT)
R = 5,729.58
T = 246.87
L = 493.44
CHORD = N00°23'36.00" E
DIST. = 493.29

CURVE ESR-4
G P.I. STA = 1655+13.37
Δ = 02°30'00.00" (RT)
R = 11,294.16
T = 246.44
L = 492.80
CHORD = N03°19'26.00"E
DIST. = 492.76

CURVE ESR-5
H P.I. STA = 1672+63.25
Δ = 03°00'00.00" (LT)
R = 11,624.16
T = 304.39
L = 608.64
CHORD = N03°04'26.00" E
DIST. = 608.57

CURVE ESR-6
I P.I. STA = 1682+61.49
Δ = 02°59'59.59" (LT)
R = 5,729.58
T = 150.03
L = 299.99
CHORD = N00°04'26.20"E
DIST. = 299.95

"CONSTRUCTION RECORD DRAWINGS_8-01-2009

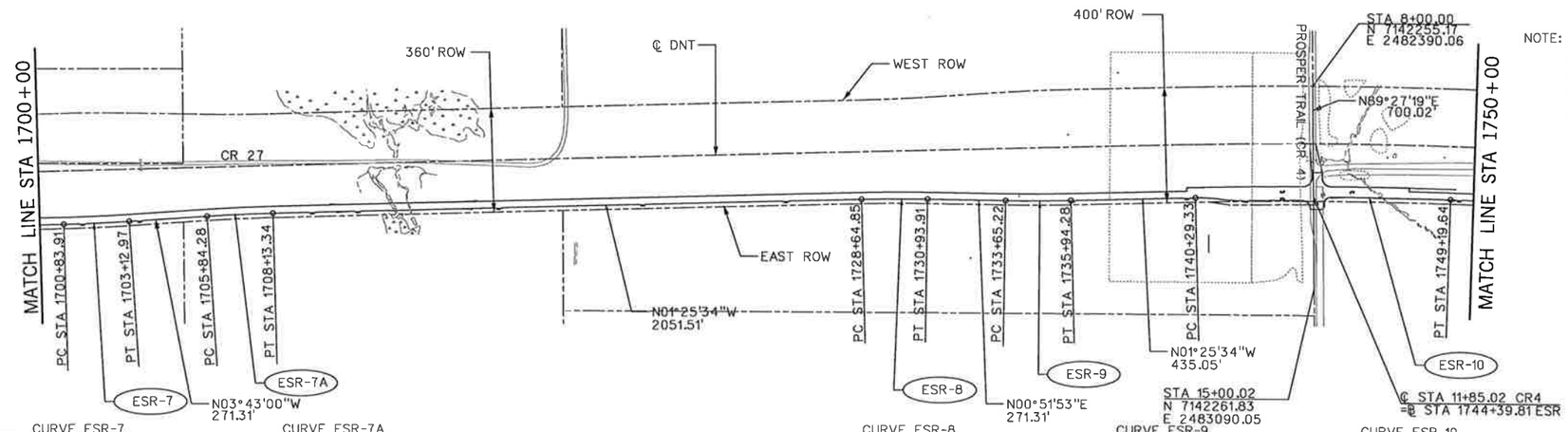

CURVE ESR-7
J P.I. STA = 1701+98.45
Δ = 02°17'26.20" (LT)
R = 5,729.58
T = 114.55
L = 229.06
CHORD = N02°34'16.69"W
DIST. = 229.05

CURVE ESR-7A
K P.I. STA = 1706+98.82
Δ = 02°17'26.20" (RT)
R = 5,729.58
T = 114.55
L = 229.06
CHORD = N02°34'16.69"W
DIST. = 229.05

CURVE ESR-8
L P.I. STA = 1729+79.39
Δ = 02°17'26.20" (RT)
R = 5,729.58
T = 114.55
L = 229.06
CHORD = N00°16'50.49"W
DIST. = 229.05

CURVE ESR-9
M P.I. STA = 1734+79.76
Δ = 02°17'26.20" (LT)
R = 5,729.58
T = 114.55
L = 229.06
CHORD = N00°16'50.49"W
DIST. = 229.05

CURVE ESR-10
N P.I. STA = 1744+74.59
Δ = 03°00'00.00" (RT)
R = 17,003.73
T = 445.26
L = 890.31
CHORD = N00°04'26.40"E
DIST. = 890.21

NOTE: COORDINATE VALUES ARE NAD83-TEXAS NORTH CENTRAL ZONE 4202. SURFACE COORDINATES SHOWN WERE CALCULATED FROM GRID VALUES USING SCALE FACTOR =1.000152710 (COLLIN COUNTY)

STATE OF TEXAS
DENNIS D. SATRE
71590
REGISTERED PROFESSIONAL ENGINEER
12/28/06

NO.	DATE	REVISION	APPROV.

DALLAS PARKWAY EXTENSION

COLLIN COUNTY

GEOMETRIC LAYOUT & SURVEY CONTROL DATA

1 OF 3

Halff Associates, Inc.
ENGINEERS · ARCHITECTS · SCIENTISTS · PLANNERS · SURVEYORS

DRAWN MDB DATE DEC 2006 DESIGNED DDS DATE
CHECKED DDS DATE SCALE 1"=500'

BOND PROJECT NO. 03-13 SHEET 53 OF 271

D-200612-01

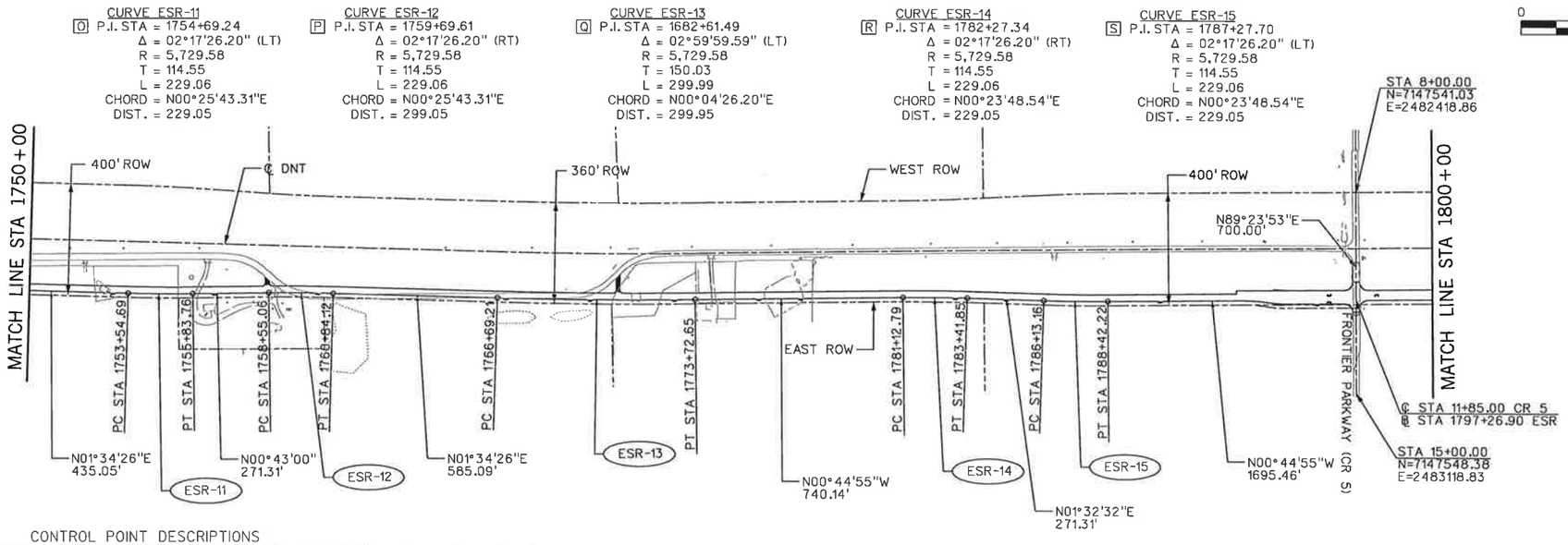

0 250 500 750 1000 1500
SCALE IN FEET

NOTE: COORDINATE VALUES ARE NAD83-TEXAS NORTH CENTRAL ZONE 4202. SURFACE COORDINATES SHOWN WERE CALCULATED FROM GRID VALUES USING SCALE FACTOR =1.000152710 (COLLIN COUNTY)

CONTROL POINT DESCRIPTIONS

POINT	NORTHING	EASTING	STATION	OFFSET	ELEVATION	DESCRIPTION
91014	7,151,181.93	2,482,699.17	1829+49.85	1222.74 ' LT	627.12	SIR 1/2 RED"TP" CAP

P.I. COORDINATES

PT.	NORTHING	EASTING
Q	7,143,287.99	2,482,796.56
P	7,143,788.36	2,482,790.30
Q	7,144,839.36	2,482,819.18
R	7,146,045.71	2,482,803.42
S	7,146,545.93	2,482,816.89
T	7,148,850.33	2,482,786.79
U	7,150,206.78	2,483,523.57
V	7,150,808.23	2,483,918.63
W	7,151,467.04	2,484,208.11

"CONSTRUCTION RECORD DRAWINGS_8-01-2009

CURVE ESR-16
T P.I. STA = 1810+32.28
Δ = 29°15'29.00" (RT)
R = 1,894.86
T = 494.60
L = 967.61
CHORD = N13°52'49.94"E
DIST. = 957.13

CURVE ESR-17
U P.I. STA = 1825+54.31
Δ = 04°47'20.18" (RT)
R = 5,729.58
T = 239.59
L = 478.89
CHORD = N30°54'14.53"E
DIST. = 478.75

CURVE ESR-18
V P.I. STA = 1832+73.63
Δ = 09°34'40.39" (LT)
R = 5,729.58
T = 480.01
L = 957.7886
CHORD = N28°30'34.44"E
DIST. = 956.67

CURVE ESR-19
W P.I. STA = 1839+91.00
Δ = 04°47'20.18" (RT)
R = 5,729.58
T = 239.59
L = 478.89
CHORD = N26°06'54.35"E
DIST. = 478.75

STATE OF TEXAS
DENNIS D. SATRE
71590
REGISTERED PROFESSIONAL ENGINEER
12/28/06

NO.	DATE	REVISION	APPROV.

DALLAS PARKWAY EXTENSION

COLLIN COUNTY

GEOMETRIC LAYOUT
& SURVEY CONTROL DATA

2 OF 3

Halff Associates, Inc.
ENGINEERS · ARCHITECTS · SCIENTISTS · PLANNERS · SURVEYORS

DRAWN MDB DATE DEC 2006 | DESIGNED DDS DATE
CHECKED DDS DATE | SCALE 1"=500'

BOND PROJECT NO. 03-13 SHEET 54 OF 271

P-200612.01

12/27/2006 1:19:59 PM
i:\23000s\23819\frisco\dgn\23819glprp02.dgn

"CONSTRUCTION RECORD DRAWINGS_8-01-2009

P.I. COORDINATES

PT	NORTHING	EASTING
X	7,152,878.02	2,484,974.51
Y	7,154,129.80	2,485,058.41
Z	7,156,305.06	2,484,729.15
AA	7,156,642.32	2,484,698.33
AB	7,158,940.52	2,484,350.47
AC	7,159,271.79	2,484,280.10
AD	7,160,032.22	2,484,165.00
AE	7,162,597.00	2,484,330.70

0 250 500 750 1000 1500
SCALE IN FEET

N

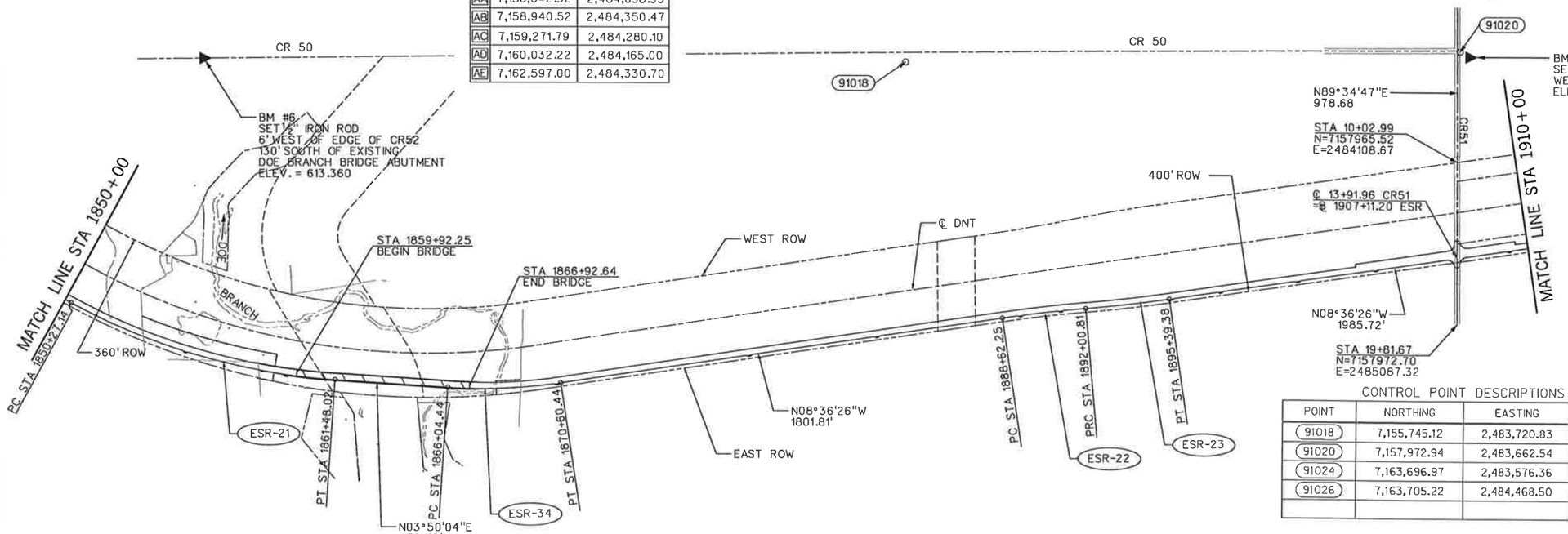

NOTE: COORDINATE VALUES ARE NAD83-TEXAS NORTH CENTRAL ZONE 4202. SURFACE COORDINATES SHOWN WERE CALCULATED FROM GRID VALUES USING SCALE FACTOR =1.000152710 (COLLIN COUNTY)

CONTROL POINT DESCRIPTIONS

POINT	NORTHING	EASTING	STATION	OFFSET	ELEVATION	DESCRIPTION
91018	7,155,745.12	2,483,720.83	1886+28.85	1080.77 ' LT	621.85	SIR 1/2 RED'TP' CAP
91020	7,157,972.94	2,483,662.54	1908+40.69	824.99 ' LT	632.52	SIR 1/2 RED'TP' CAP
91024	7,163,696.97	2,483,576.36	1964+70.22	749.85 ' LT	646.79	SIR 1/2 RED'TP' CAP
91026	7,163,705.22	2,484,468.50	1964+74.82	142.32 ' RT	651.15	SIR 1/2 RED'TP' CAP

CURVE ESR-21
X P.I. STA = 1855+96.40
Δ = 24°40'30.86" (LT)
R = 2,602.68
T = 569.27
L = 1,120.88
CHORD = N16°10'19.01"E
DIST. = 1,112.24

CURVE ESR-34
Y P.I. STA = 1868+33.34
Δ = 12°26'29.14" (LT)
R = 2,100.00
T = 228.90
L = 456.00
CHORD = N02°23'10.99"W
DIST. = 455.11

CURVE ESR-22
Z P.I. STA = 1890+31.58
Δ = 03°23'08.27" (RT)
R = 5,729.58
T = 169.33
L = 338.56
CHORD = N06°54'51.43"W
DIST. = 338.51

CURVE ESR-15
AA P.I. STA = 1893+70.14
Δ = 03°23'08.27" (LT)
R = 5,729.58
T = 169.33
L = 338.56
CHORD = N06°54'51.43"W
DIST. = 338.51

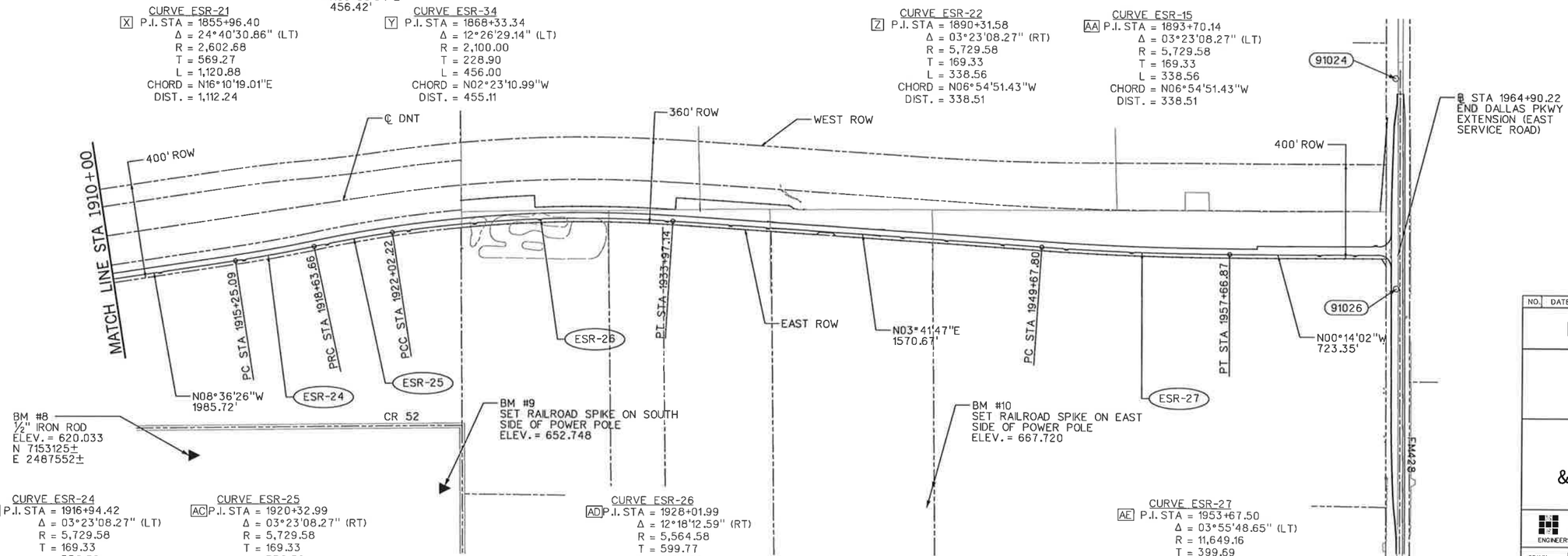

CURVE ESR-24
AB P.I. STA = 1916+94.42
Δ = 03°23'08.27" (LT)
R = 5,729.58
T = 169.33
L = 338.56
CHORD = N10°17'59.70"W
DIST. = 338.51

CURVE ESR-25
AC P.I. STA = 1920+32.99
Δ = 03°23'08.27" (RT)
R = 5,729.58
T = 169.33
L = 338.56
CHORD = N10°17'59.69"W
DIST. = 338.51

CURVE ESR-26
AD P.I. STA = 1928+01.99
Δ = 12°18'12.59" (RT)
R = 5,564.58
T = 599.77
L = 1,194.92
CHORD = N02°27'19.26"W
DIST. = 1,192.62

CURVE ESR-27
AE P.I. STA = 1953+67.50
Δ = 03°55'48.65" (LT)
R = 11,649.16
T = 399.69
L = 799.07
CHORD = N01°43'52.71"E
DIST. = 798.91

STATE OF TEXAS
DENNIS D. SATRE
71590
REGISTERED PROFESSIONAL ENGINEER
Dennis D. Satre
12/28/06

NO.	DATE	REVISION	APPROV.

DALLAS PARKWAY EXTENSION

COLLIN COUNTY

GEOMETRIC LAYOUT
& SURVEY CONTROL DATA

3 OF 3

Halff Associates, Inc.
ENGINEERS · ARCHITECTS · SCIENTISTS · PLANNERS · SURVEYORS

DRAWN MDB DATE DEC 2006 DESIGNED DDS DATE
CHECKED DDS DATE SCALE 1"=500'

BOND PROJECT NO. 03-13 SHEET 55 OF 271

P-200612-01

TEMP. GRADING EASEMENT

EXIST ROW

252.67'
N00°25'34"W
82.60'
N01°34'26"E
146.02'
N00°25'34"W

CURVE ESR-1
P.I. STA = 1641+10.11
Δ = 0° 56' 04" (LT)
R = 2,000.00
T = 16.31
L = 32.62

CURVE ESR-2
P.I. STA = 1646+32.04
Δ = 1° 30' 00" (LT)
R = 10,806.08
T = 141.46
L = 282.90

CURVE ESR-3
P.I. STA = 1620+20.36
Δ = 4° 56' 04" (RT)
R = 5,729.58
T = 246.87
L = 493.44

PROPOSED TEMPORARY CROSSOVER (SEE SEPARATE PLAN/PROFILE SHEET-35)

PROPOSED WEST SERVICE ROAD (SEE SEPARATE PLAN/PROFILE SHEET-34)

US 380

75' EASEMENT

℄ 380

℄ STA 1180+28.11 = ℄ STA 1638+38.53

℄ DNT

STA 1638+80.53
BEGIN CONCRETE PAVEMENT
MATCH EXIST. 380 PAVEMENT EDGE. SEE GRADING PLAN FOR CURB LIMITS.

ER STA 1638+92.74
BEGIN CROSS FALL TRANSITION (LINEAR)
BEGIN 4" WHITE BROKEN LANE STRIPE

ER STA 1639+31.98

INSTALL:
125 LF MBGF BACK W/SGT
MBGF TRANSITION AHEAD

STA 1641+52.85
BEGIN SSTR

STA 1642+48
END SSTR

STA 1641+53
BEGIN SSTR

COUNTY ROAD 27
(TO BE ABANDONED)

PT STA 1641+26.42

PC STA 1640+93.79

℄ STA 1642+00.00
CULVERT E2
4-8'x5'

PC STA 1644+90.58

TY. II CURB

24' @ 2-12' LNS

15' TYP.

45:1 TAPER

ESR-2

ESR-3

PRC STA 1647+73.48

℄ STA 1639+11.69
CULVERT E1
2-5'x2'
6' TYP.
SEE US 380 PAVING PLAN

255.26'
N00°25'34"W
364.16'
N01°21'38"W

EXIST ROW

STA 1646+00
END LANE STRIPE
BEGIN 8" YELLOW TAPER STRIPE (45:1) WITH 12" DIAGONAL AT 20' SPACING

STA 1640+00
END CROSSFALL TRANSITION
TEMP. GRADING EASEMENT

US 380 ROW

INSTALL:
64 LF MBGF BACK W/SGT
MBGF TRANSITION AHEAD

STA 1642+48
END SSTR

PROPOSED ℄ & PGL DRAINAGE ESR EASEMENT

MATCH LINE 1650+00

"CONSTRUCTION RECORD DRAWINGS_8-01-2009

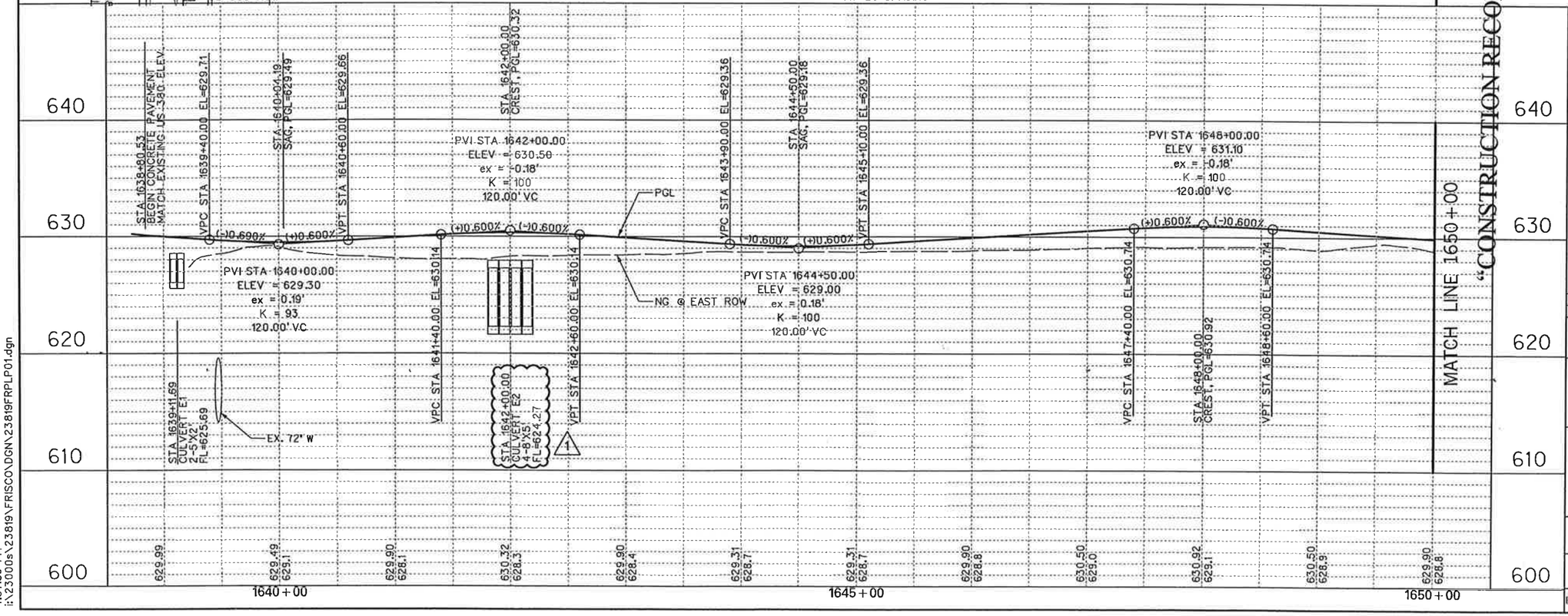

MATCH LINE 1650+00

"CONSTRUCTION RECORD DRAWINGS_8-01-2009

0 50 100 150 200
SCALE IN FEET

LEGEND

PGL	PROFILE GRADE LINE
⇨	EXISTING TRAFFIC LANE
➡	PROPOSED TRAFFIC LANE
⇨	FUTURE TRAFFIC LANE
#	SOIL BORING
CP#	CONTROL POINT / BENCHMARK

EXISTING UTILITIES

—TEL—	BURIED PHONE	FH	FIRE HYDRANT
—OHE—	OVHD. ELECTRIC	WM	WATER METER
⊗	POWER POLE	WV	WATER VALVE
⊸	GUY WIRE	WMH	WATER MANHOLE

NOTES:

1. EXISTING UTILITES SHOWN ARE APPROXIMATE. CONTRACTOR SHALL CONFIRM PRESENCE AND LOCATION OF ALL UTILITIES PRIOR TO WORK.

2. SEE GEOMETRIC LAYOUT & SURVEY CONTROL DATA FOR HORIZONTAL DATUM & BENCHMARK INFORMATION.

3. SEE DRAINAGE PLAN FOR CURB INLET LOCATIONS.

4. SEE TYPICAL SECTIONS FOR ROADWAY PAVING DETAILS.

STATE OF TEXAS
DENNIS D. SATRE
71590
REGISTERED PROFESSIONAL ENGINEER
6.01.07

NO.	DATE	REVISION	APPROV.
1	6/1/07	CULVERT E2 & W2 REVISION - C.O. #1	D. SATRE

DALLAS PARKWAY EXTENSION

COLLIN COUNTY, TX

PAVING PLAN – PROFILE
EAST SERVICE ROAD
BEGIN TO STA 1650+00

1

Halff Associates, Inc.
ENGINEERS · ARCHITECTS · SCIENTISTS · PLANNERS · SURVEYORS

DRAWN MDB	DATE DEC 2006	DESIGNED DDS	DATE
CHECKED DDS	DATE	SCALE 1"=100'(H), 1"=10'(V)	

BOND PROJECT NO. 03-13 SHEET 56 OF 271

4:57:59 PM
i:\23000s\23819\FRISCO\DGN\23819FRPLP01.dgn

6/1/2007 4:57:59 PM

P-200612-01

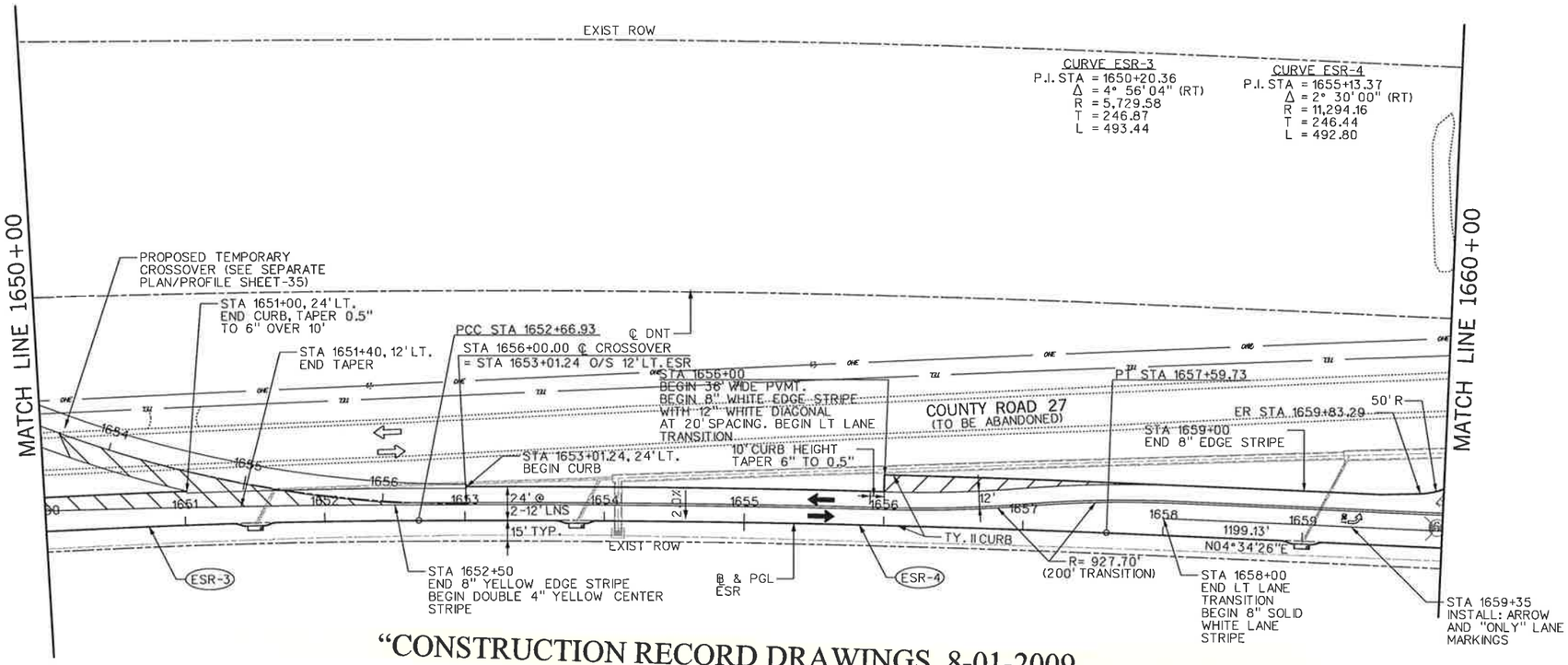

"CONSTRUCTION RECORD DRAWINGS_8-01-2009

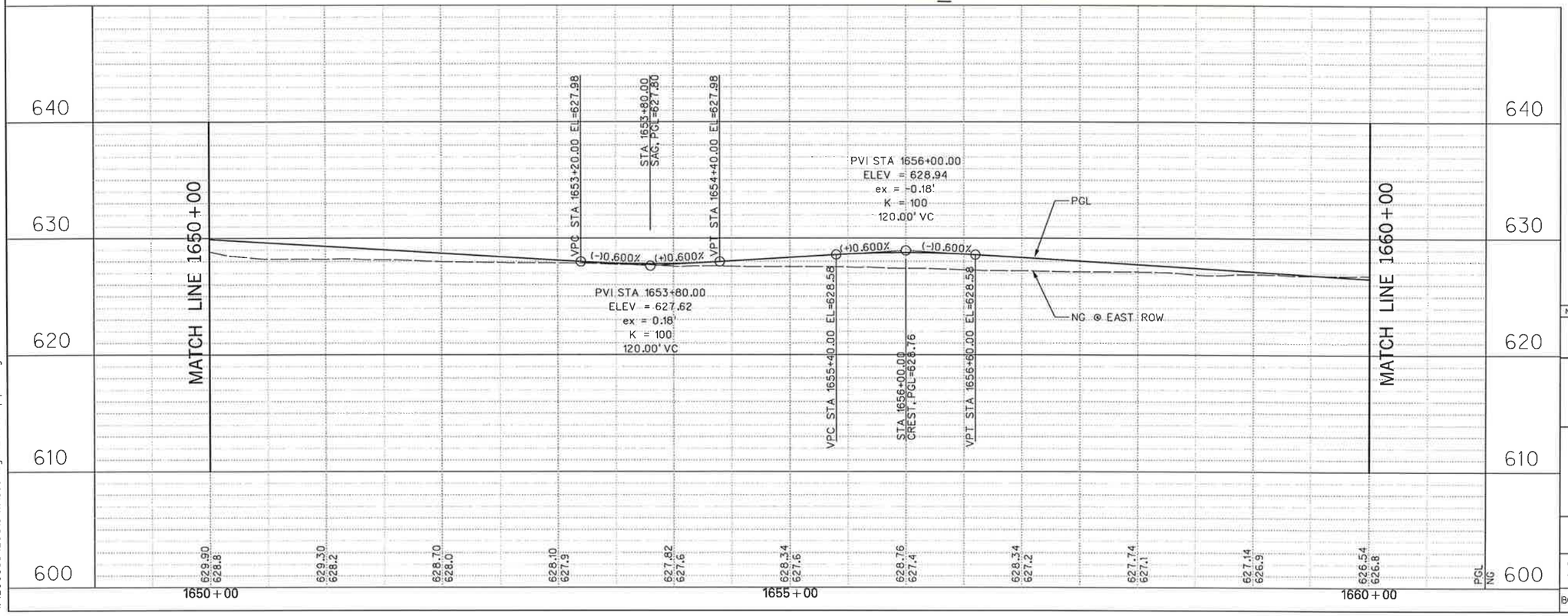

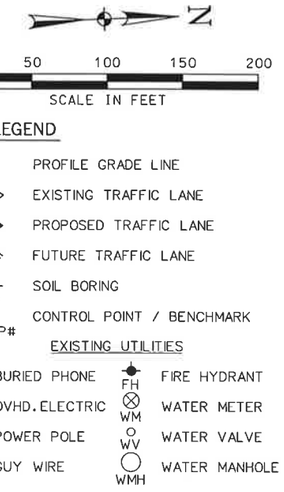

NOTES:

1. EXISTING UTILITES SHOWN ARE APPROXIMATE. CONTRACTOR SHALL CONFIRM PRESENCE AND LOCATION OF ALL UTILITIES PRIOR TO WORK.

2. SEE GEOMETRIC LAYOUT & SURVEY CONTROL DATA FOR HORIZONTAL DATUM & BENCHMARK INFORMATION.

3. SEE DRAINAGE PLAN FOR CURB INLET LOCATIONS.

4. SEE TYPICAL SECTIONS FOR ROADWAY PAVING DETAILS.

NO.	DATE	REVISION	APPROV.

DALLAS PARKWAY EXTENSION

COLLIN COUNTY

PAVING PLAN – PROFILE
EAST SERVICE ROAD
STA 1650+00 TO STA 1660+00

2

Halff Associates, Inc.
ENGINEERS · ARCHITECTS · SCIENTISTS · PLANNERS · SURVEYORS

DRAWN	MDB	DATE	DEC 2006	DESIGNED	DDS	DATE	
CHECKED	DDS	DATE		SCALE	1"=100'(H),1"=10'(V)		

BOND PROJECT NO. 03-13 SHEET 57 OF 271

P-200612-01

1:34:50 PM
i:\23000s\23819\frisco\dgn\23819frplp02.dgn
12/27/2006 1:34:50 PM

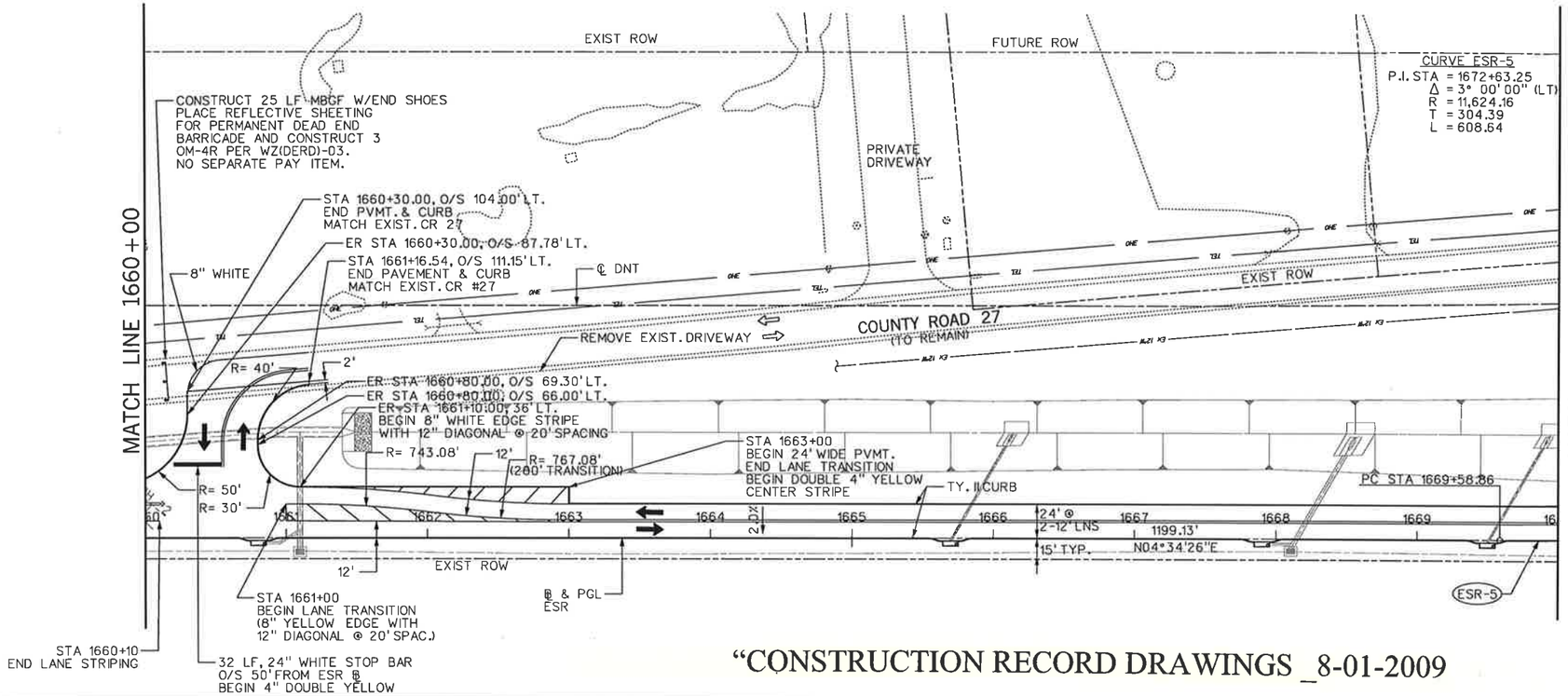

"CONSTRUCTION RECORD DRAWINGS _8-01-2009

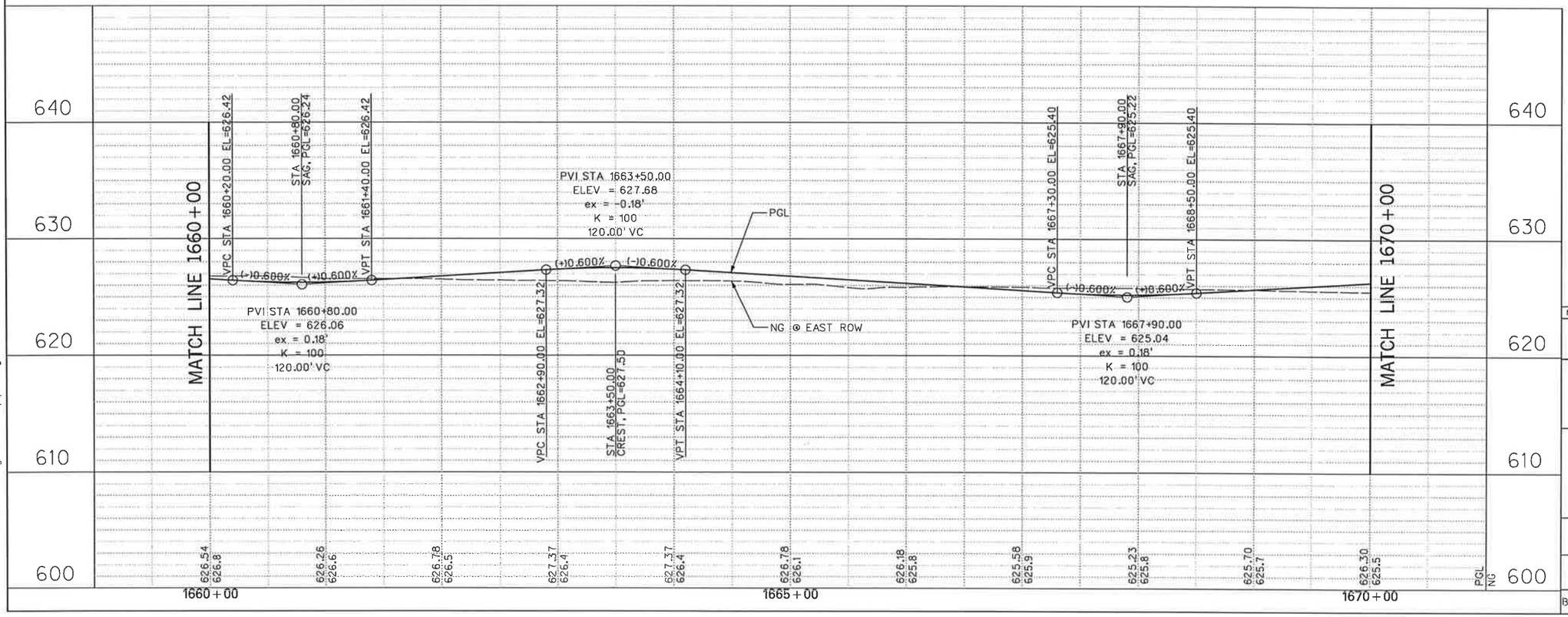

LEGEND

PGL	PROFILE GRADE LINE
⇨	EXISTING TRAFFIC LANE
➡	PROPOSED TRAFFIC LANE
⇨ (dashed)	FUTURE TRAFFIC LANE
#	SOIL BORING
CP#	CONTROL POINT / BENCHMARK

EXISTING UTILITIES

TEL	BURIED PHONE	FH	FIRE HYDRANT
OHE	OVHD. ELECTRIC	WM	WATER METER
⊗	POWER POLE	WV	WATER VALVE
→	GUY WIRE	WMH	WATER MANHOLE

NOTES:

1. EXISTING UTILITES SHOWN ARE APPROXIMATE. CONTRACTOR SHALL CONFIRM PRESENCE AND LOCATION OF ALL UTILITIES PRIOR TO WORK.

2. SEE GEOMETRIC LAYOUT & SURVEY CONTROL DATA FOR HORIZONTAL DATUM & BENCHMARK INFORMATION.

3. SEE DRAINAGE PLAN FOR CURB INLET LOCATIONS.

4. SEE TYPICAL SECTIONS FOR ROADWAY PAVING DETAILS.

STATE OF TEXAS
DENNIS D. SATRE
71590
REGISTERED PROFESSIONAL ENGINEER
12/28/06

NO.	DATE	REVISION	APPROV.

DALLAS PARKWAY EXTENSION

COLLIN COUNTY

PAVING PLAN – PROFILE
EAST SERVICE ROAD
STA 1660+00 TO STA 1670+00

3

Halff Associates, Inc.
ENGINEERS · ARCHITECTS · SCIENTISTS · PLANNERS · SURVEYORS

DRAWN	MDB	DATE DEC 2006	DESIGNED DDS
CHECKED	DDS	DATE	SCALE 1"=100'(H), 1"=10'(V)

BOND PROJECT NO. 03-13 SHEET 58 OF 271

P-200612-01

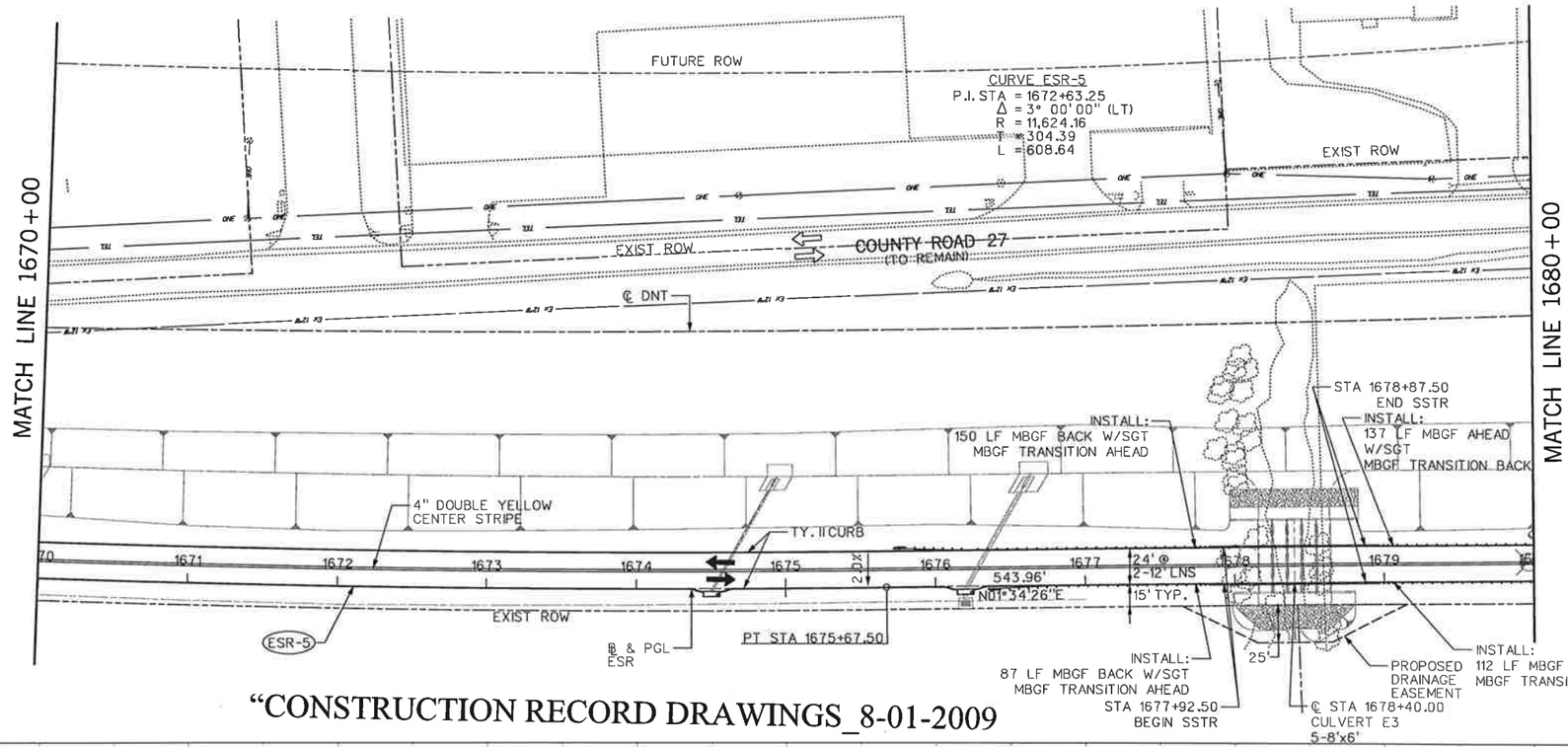

"CONSTRUCTION RECORD DRAWINGS_8-01-2009

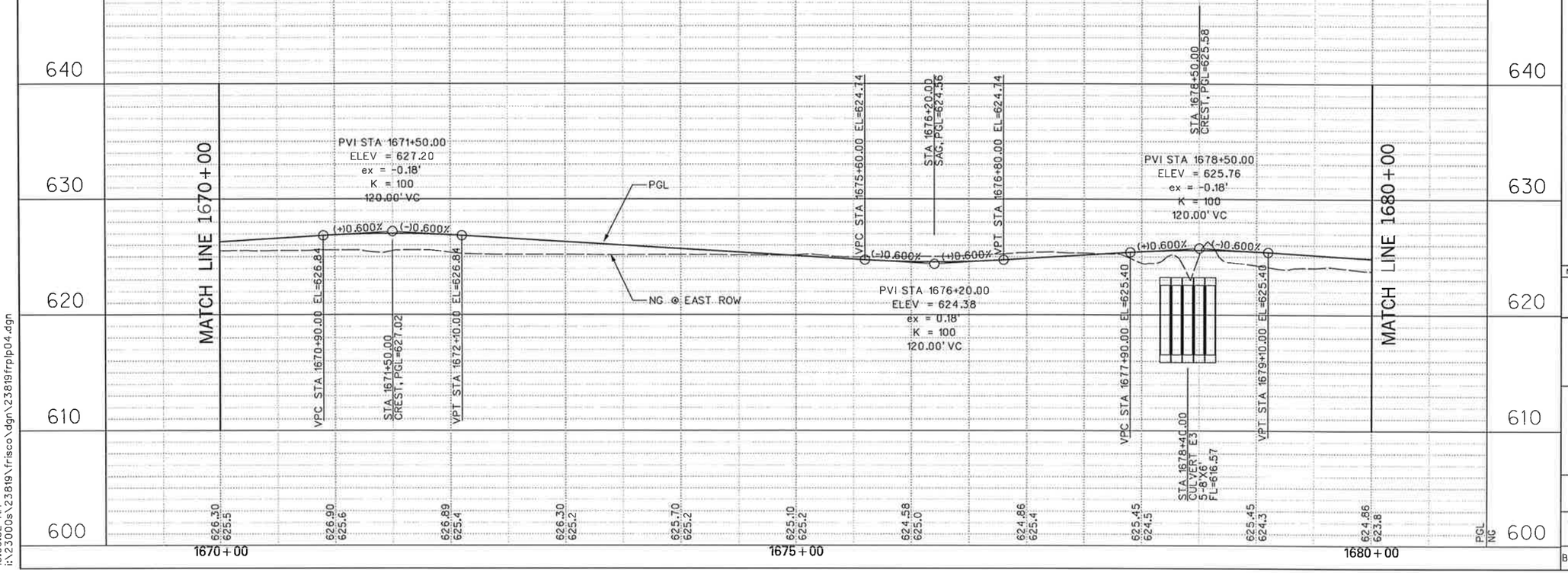

LEGEND

PGL	PROFILE GRADE LINE
⇨	EXISTING TRAFFIC LANE
➡	PROPOSED TRAFFIC LANE
⇨	FUTURE TRAFFIC LANE
#	SOIL BORING
CP#	CONTROL POINT / BENCHMARK

EXISTING UTILITIES

—TEL—	BURIED PHONE	FH	FIRE HYDRANT
—OHE—	OVHD. ELECTRIC	WM	WATER METER
⊗	POWER POLE	WV	WATER VALVE
—⊃	GUY WIRE	WMH	WATER MANHOLE

NOTES:

1. EXISTING UTILITES SHOWN ARE APPROXIMATE. CONTRACTOR SHALL CONFIRM PRESENCE AND LOCATION OF ALL UTILITIES PRIOR TO WORK.

2. SEE GEOMETRIC LAYOUT & SURVEY CONTROL DATA FOR HORIZONTAL DATUM & BENCHMARK INFORMATION.

3. SEE DRAINAGE PLAN FOR CURB INLET LOCATIONS.

4. SEE TYPICAL SECTIONS FOR ROADWAY PAVING DETAILS.

STATE OF TEXAS
DENNIS D. SATRE
71590
REGISTERED PROFESSIONAL ENGINEER
Dennis D. Satre 12/28/06

NO.	DATE	REVISION	APPROV.

DALLAS PARKWAY EXTENSION

COLLIN COUNTY

PAVING PLAN – PROFILE
EAST SERVICE ROAD
STA 1670+00 TO STA 1680+00

4

Halff Associates, Inc.
ENGINEERS · ARCHITECTS · SCIENTISTS · PLANNERS · SURVEYORS

DRAWN MDB	DATE DEC 2006	DESIGNED DDS	DATE
CHECKED DDS	DATE	SCALE 1"=100'(H), 1"=10'(V)	

BOND PROJECT NO. 03-13 SHEET 59 OF 271

P-200612-01

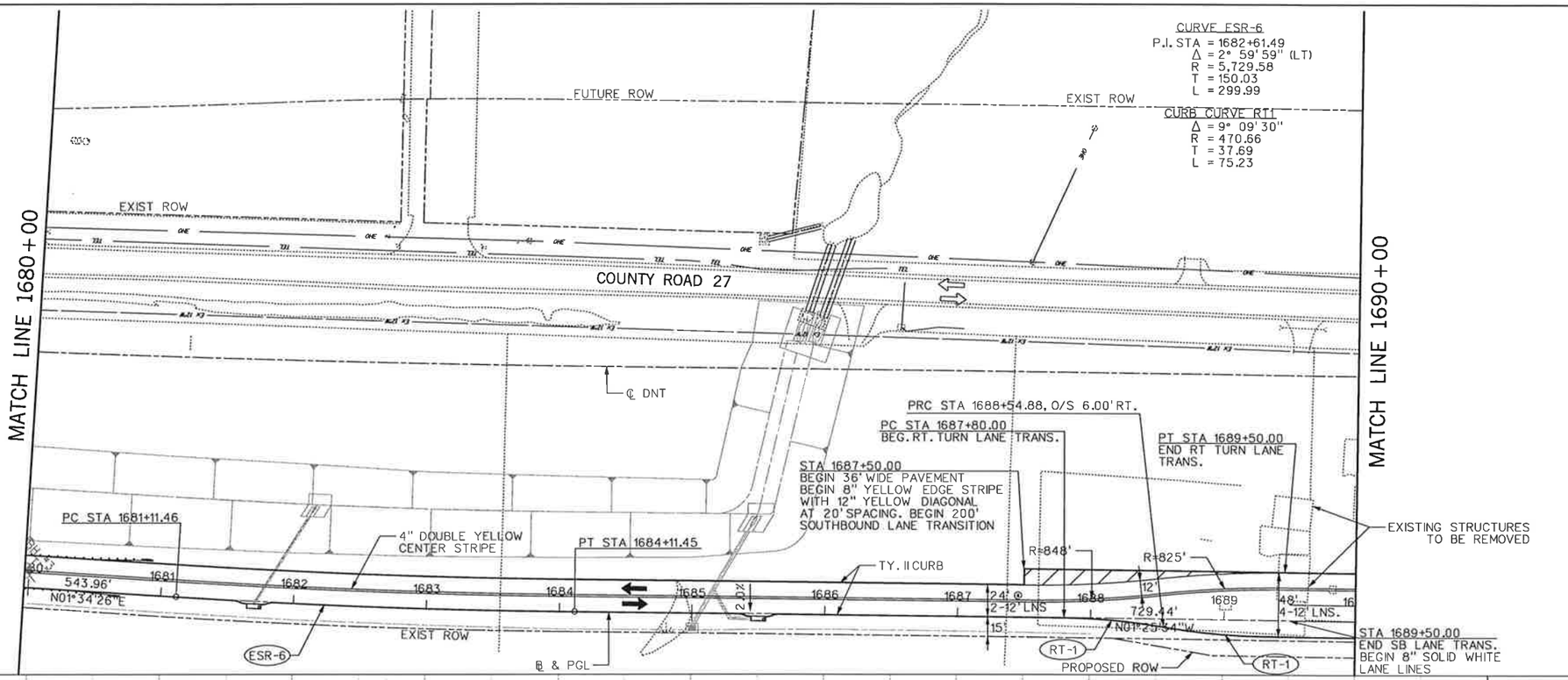

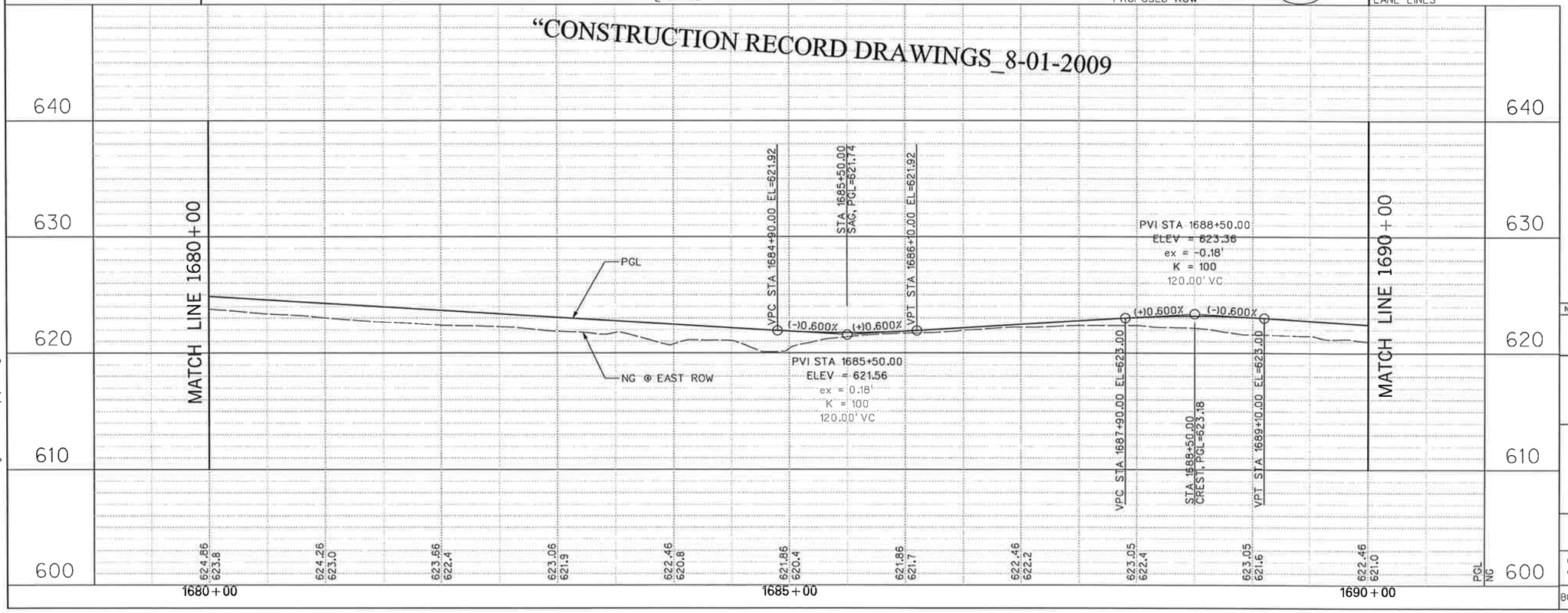

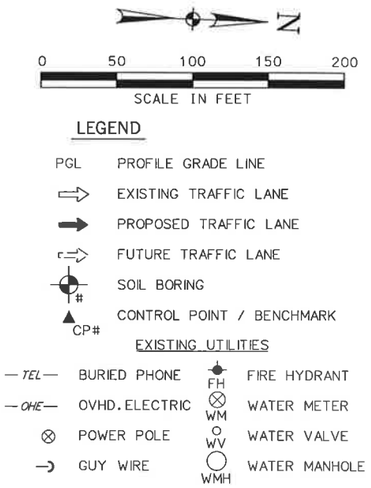

NOTES:

1. EXISTING UTILITES SHOWN ARE APPROXIMATE. CONTRACTOR SHALL CONFIRM PRESENCE AND LOCATION OF ALL UTILITIES PRIOR TO WORK.

2. SEE GEOMETRIC LAYOUT & SURVEY CONTROL DATA FOR HORIZONTAL DATUM & BENCHMARK INFORMATION.

3. SEE DRAINAGE PLAN FOR CURB INLET LOCATIONS.

4. SEE TYPICAL SECTIONS FOR ROADWAY PAVING DETAILS.

NO.	DATE	REVISION	APPROV.

DALLAS PARKWAY EXTENSION

COLLIN COUNTY, TEXAS

PAVING PLAN – PROFILE
EAST SERVICE ROAD
STA 1680+00 TO STA 1690+00

5

Halff Associates, Inc.
ENGINEERS · ARCHITECTS · SCIENTISTS · PLANNERS · SURVEYORS

DRAWN MDB	DATE DEC 2006	DESIGNED DDS	DATE
CHECKED DDS	DATE	SCALE 1"=100'(H), 1"=10'(V)	

BOND PROJECT NO. 03-13 SHEET 60 OF 271

P.200612.01

i:\23000s\23819\frisco\dgn\23819frplp06.dgn

"CONSTRUCTION RECORD DRAWINGS _8-01-2009

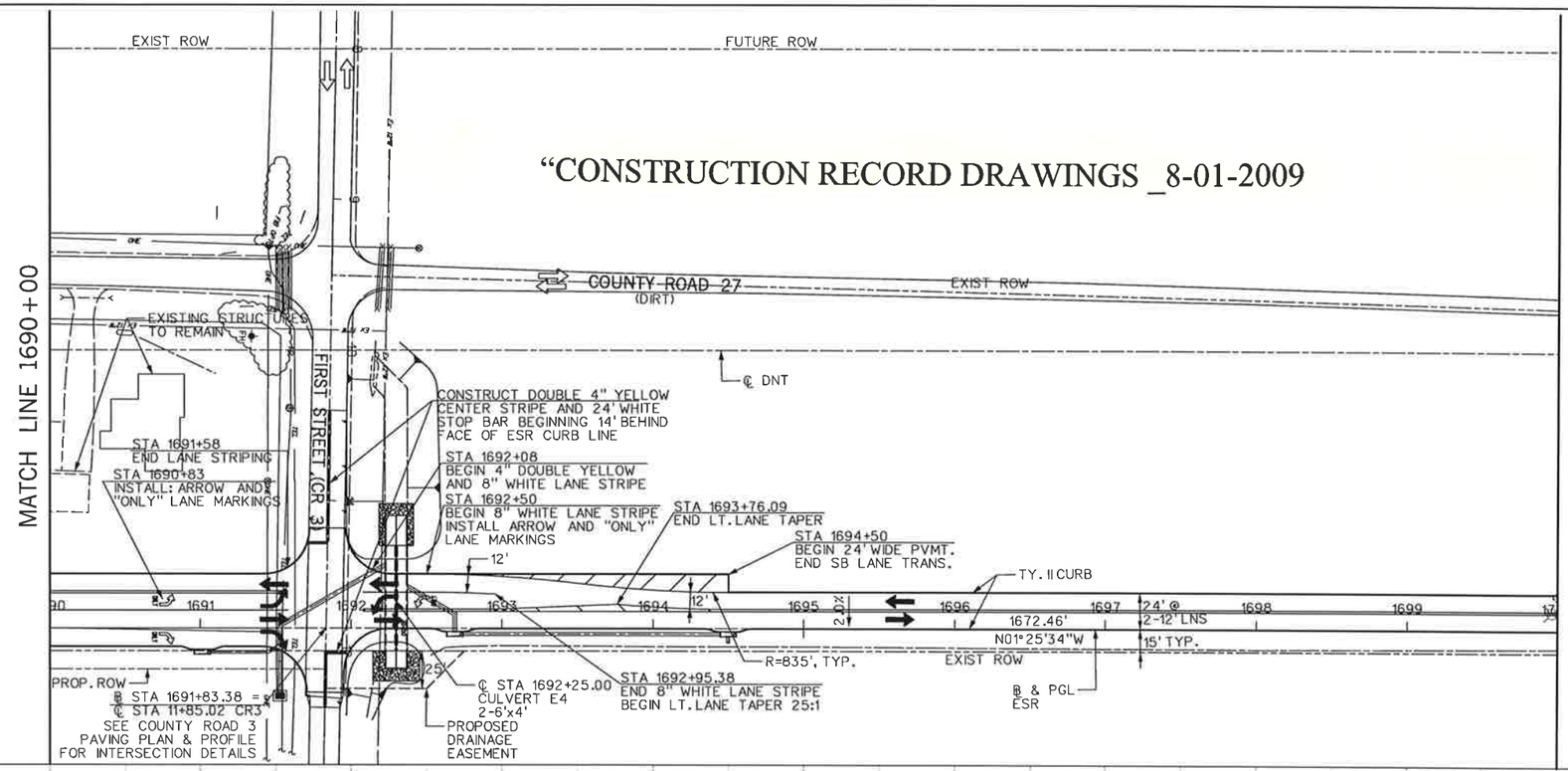

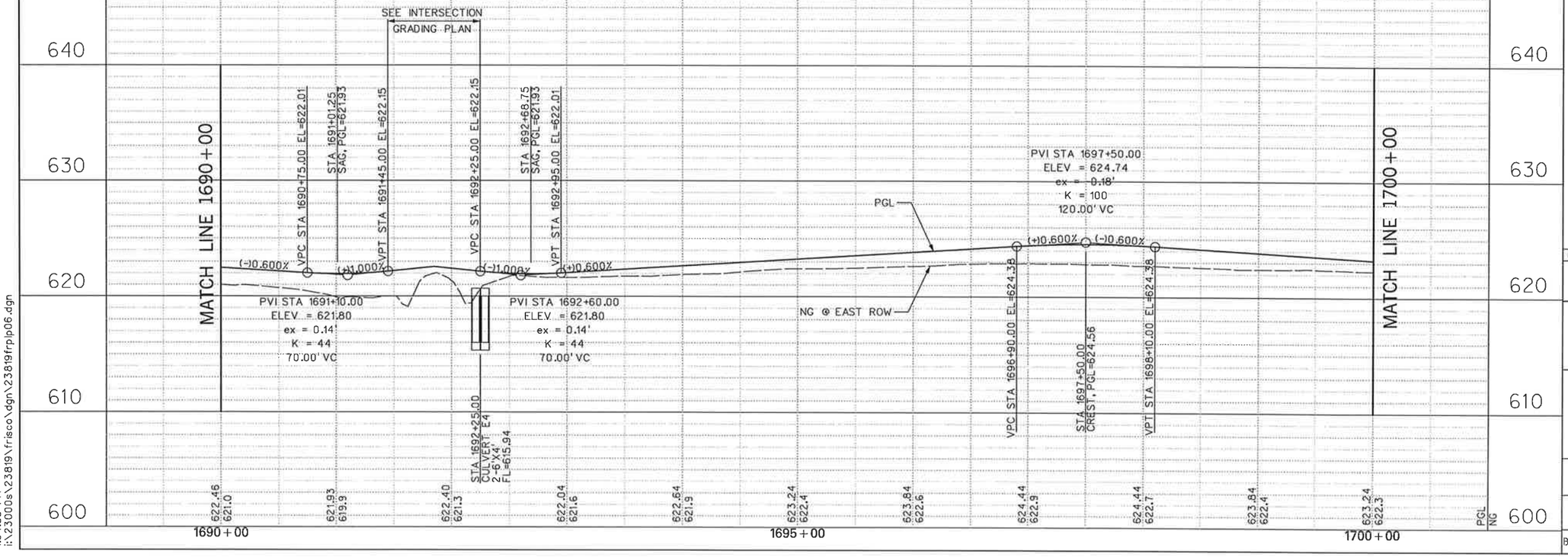

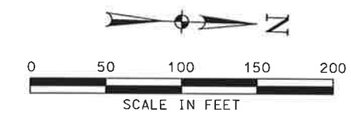

LEGEND

PGL	PROFILE GRADE LINE
⇨	EXISTING TRAFFIC LANE
➡	PROPOSED TRAFFIC LANE
⇨ (dashed)	FUTURE TRAFFIC LANE
#	SOIL BORING
CP#	CONTROL POINT / BENCHMARK

EXISTING UTILITIES

—TEL—	BURIED PHONE	FH	FIRE HYDRANT
—OHE—	OVHD. ELECTRIC	WM	WATER METER
⊗	POWER POLE	WV	WATER VALVE
	GUY WIRE	WMH	WATER MANHOLE

NOTES:

1. EXISTING UTILITES SHOWN ARE APPROXIMATE. CONTRACTOR SHALL CONFIRM PRESENCE AND LOCATION OF ALL UTILITIES PRIOR TO WORK.

2. SEE GEOMETRIC LAYOUT & SURVEY CONTROL DATA FOR HORIZONTAL DATUM & BENCHMARK INFORMATION.

3. SEE DRAINAGE PLAN FOR CURB INLET LOCATIONS.

4. SEE TYPICAL SECTIONS FOR ROADWAY PAVING DETAILS.

NO.	DATE	REVISION	APPROV.

DALLAS PARKWAY EXTENSION

COLLIN COUNTY TEXAS

PAVING PLAN – PROFILE
EAST SERVICE ROAD
STA 1690+00 TO STA 1700+00

6

Halff Associates, Inc.
ENGINEERS · ARCHITECTS · SCIENTISTS · PLANNERS · SURVEYORS

DRAWN	MDB	DATE DEC 2006	DESIGNED DDS DATE
CHECKED	DDS	DATE	SCALE 1"=100'(H), 1"=10'(V)

BOND PROJECT NO. 03-13 SHEET 61 OF 271

P-200612-01

1:34:55 PM
i:\23000s\23819\frisco\dgn\23819frplp06.dgn
12/27/2006 1:34:55 PM

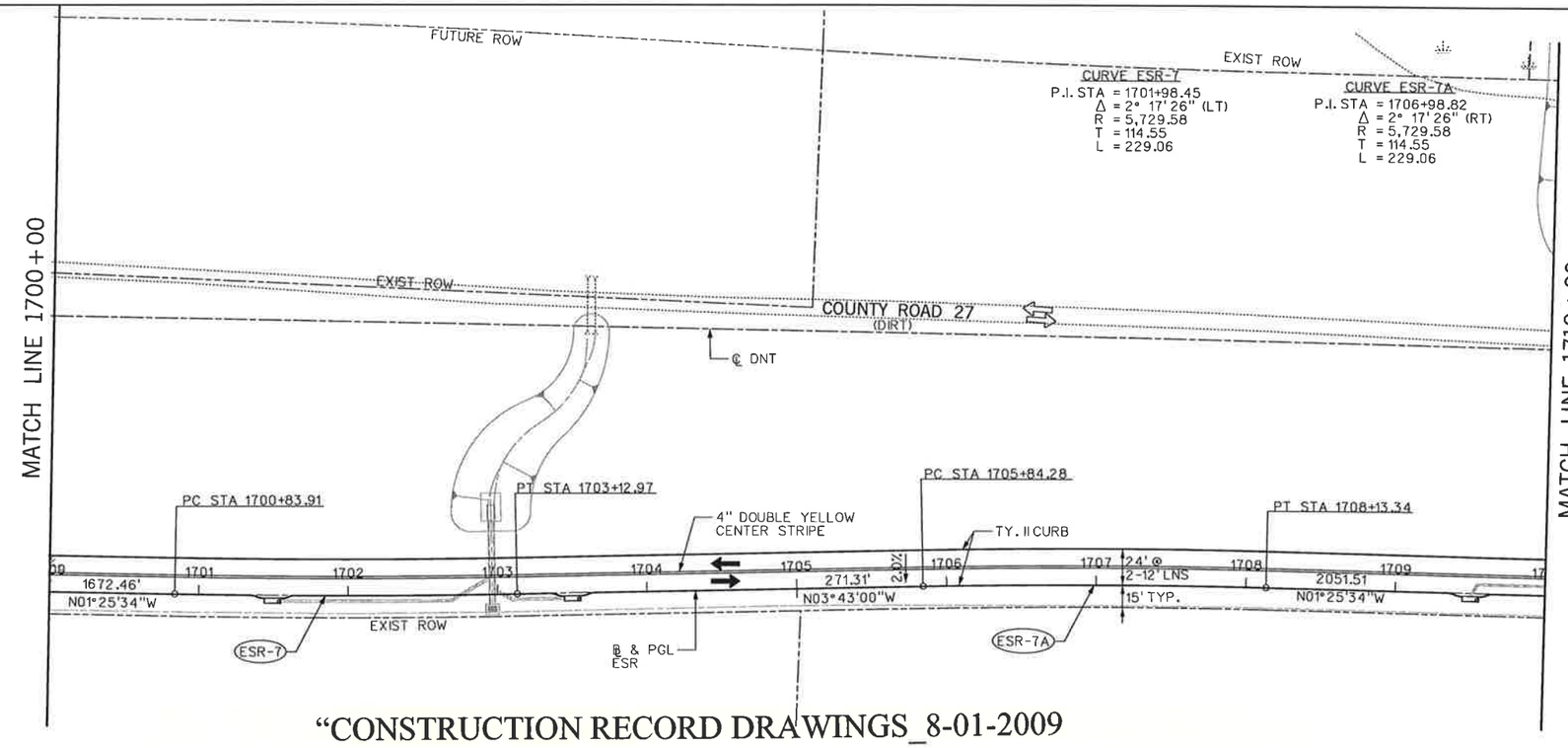

"CONSTRUCTION RECORD DRAWINGS_8-01-2009

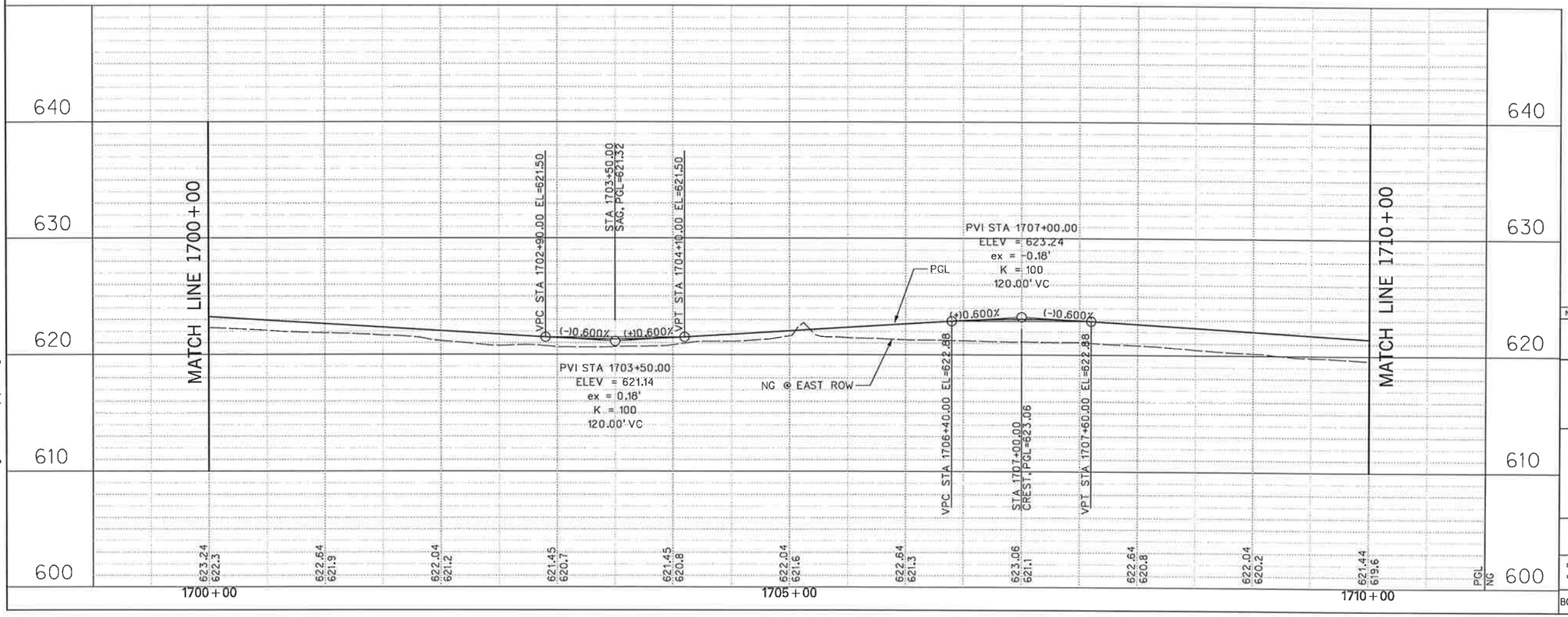

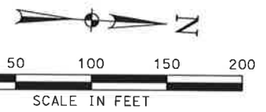

LEGEND

- PGL — PROFILE GRADE LINE
- EXISTING TRAFFIC LANE
- PROPOSED TRAFFIC LANE
- FUTURE TRAFFIC LANE
- SOIL BORING
- CP# — CONTROL POINT / BENCHMARK

EXISTING UTILITIES

- —TEL— BURIED PHONE
- —OHE— OVHD. ELECTRIC
- POWER POLE
- GUY WIRE
- FH — FIRE HYDRANT
- WM — WATER METER
- WV — WATER VALVE
- WMH — WATER MANHOLE

NOTES:

1. EXISTING UTILITES SHOWN ARE APPROXIMATE. CONTRACTOR SHALL CONFIRM PRESENCE AND LOCATION OF ALL UTILITIES PRIOR TO WORK.

2. SEE GEOMETRIC LAYOUT & SURVEY CONTROL DATA FOR HORIZONTAL DATUM & BENCHMARK INFORMATION.

3. SEE DRAINAGE PLAN FOR CURB INLET LOCATIONS.

4. SEE TYPICAL SECTIONS FOR ROADWAY PAVING DETAILS.

NO.	DATE	REVISION	APPROV.

DALLAS PARKWAY EXTENSION

COLLIN COUNTY

PAVING PLAN – PROFILE
EAST SERVICE ROAD
STA 1700+00 TO STA 1710+00

7

Halff Associates, Inc.
ENGINEERS · ARCHITECTS · SCIENTISTS · PLANNERS · SURVEYORS

DRAWN MDB DATE DEC 2006 | DESIGNED DDS DATE
CHECKED DDS DATE | SCALE 1"=100'(H), 1"=10'(V)

BOND PROJECT NO. 03-13 SHEET 62 OF 271

P-200612-01

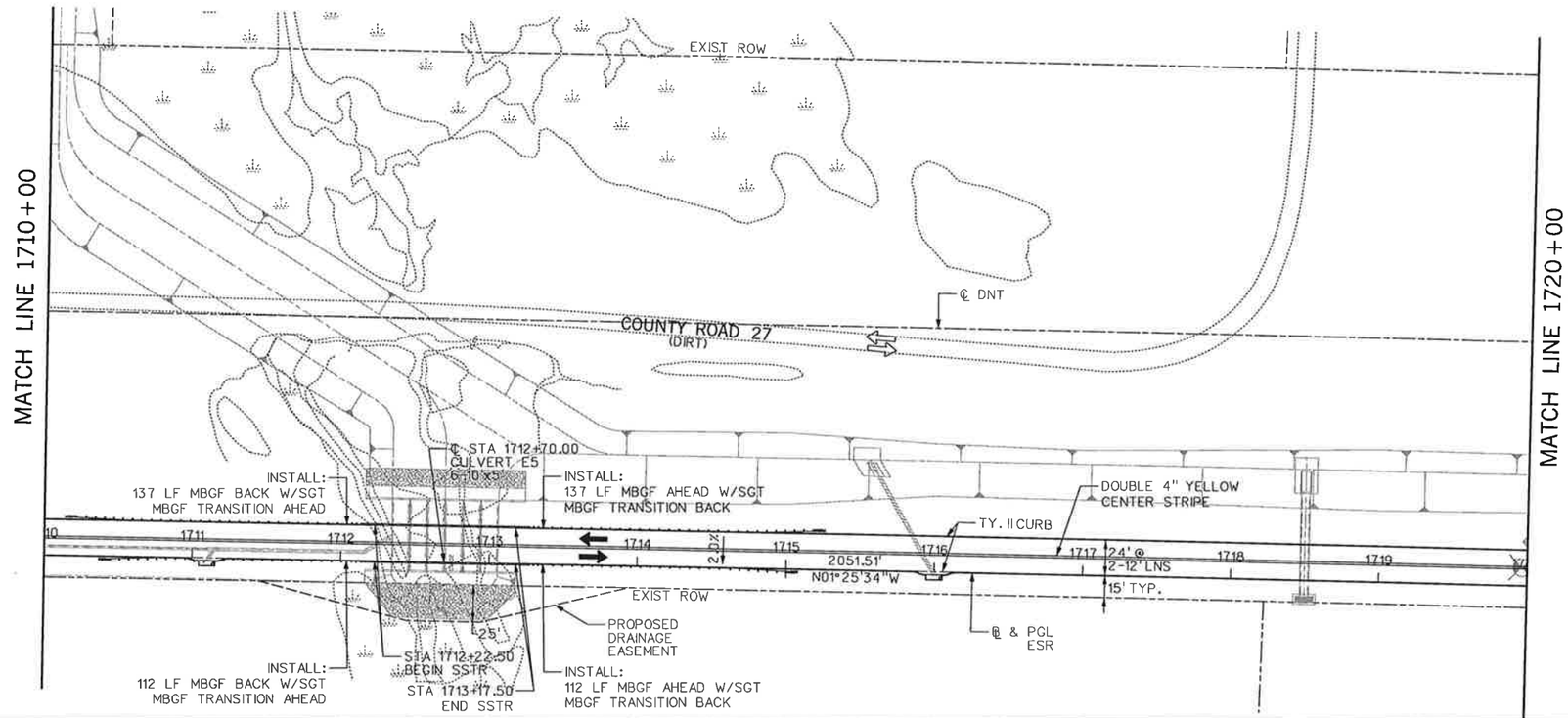

0 50 100 150 200
SCALE IN FEET

LEGEND

- PGL — PROFILE GRADE LINE
- EXISTING TRAFFIC LANE
- PROPOSED TRAFFIC LANE
- FUTURE TRAFFIC LANE
- SOIL BORING
- CP# — CONTROL POINT / BENCHMARK

EXISTING UTILITIES

- —TEL— BURIED PHONE
- —OHE— OVHD. ELECTRIC
- POWER POLE
- GUY WIRE
- FH — FIRE HYDRANT
- WM — WATER METER
- WV — WATER VALVE
- WMH — WATER MANHOLE

NOTES:

1. EXISTING UTILITES SHOWN ARE APPROXIMATE. CONTRACTOR SHALL CONFIRM PRESENCE AND LOCATION OF ALL UTILITIES PRIOR TO WORK.

2. SEE GEOMETRIC LAYOUT & SURVEY CONTROL DATA FOR HORIZONTAL DATUM & BENCHMARK INFORMATION.

3. SEE DRAINAGE PLAN FOR CURB INLET LOCATIONS.

4. SEE TYPICAL SECTIONS FOR ROADWAY PAVING DETAILS.

"CONSTRUCTION RECORD DRAWINGS_8-01-2009

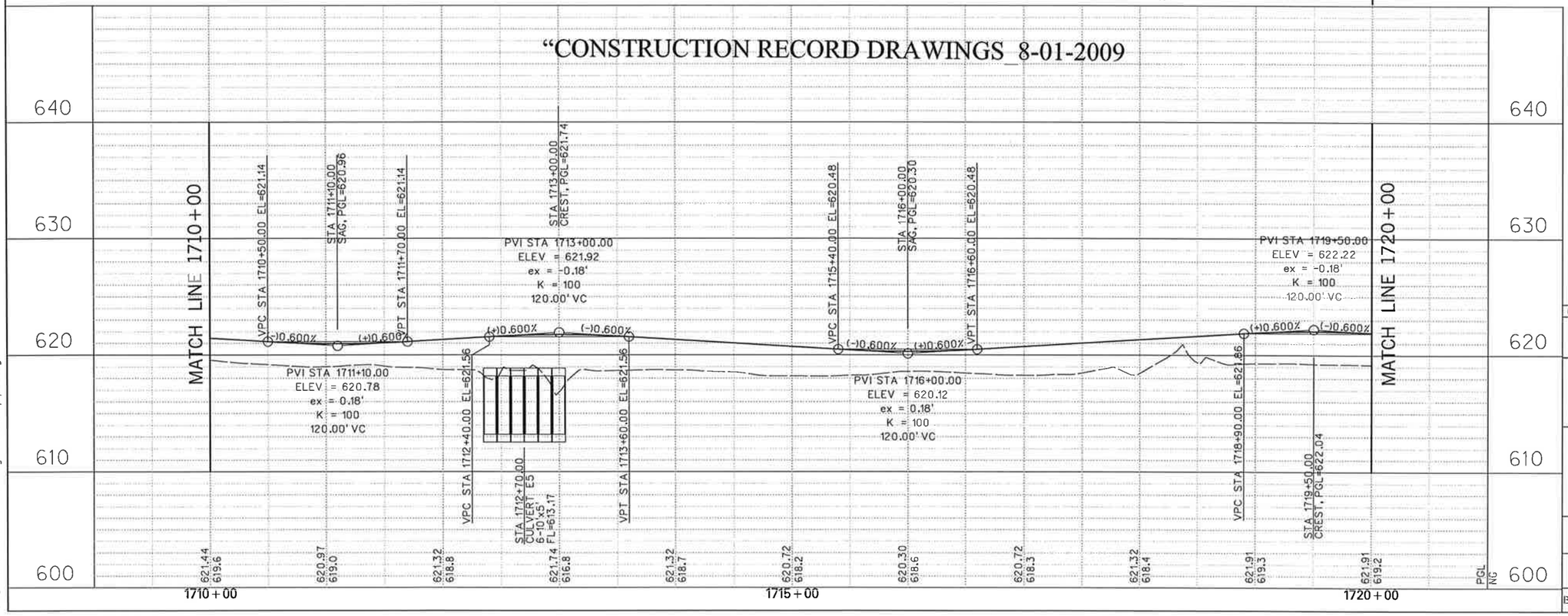

NO.	DATE	REVISION	APPROV.

DALLAS PARKWAY EXTENSION

COLLIN COUNTY

PAVING PLAN – PROFILE
EAST SERVICE ROAD
STA 1710+00 TO STA 1720+00

8

Halff Associates, Inc.
ENGINEERS · ARCHITECTS · SCIENTISTS · PLANNERS · SURVEYORS

DRAWN	MDB	DATE	DEC 2006	DESIGNED	DDS	DATE	
CHECKED	DDS	DATE		SCALE	1"=100'(H), 1"=10'(V)		

BOND PROJECT NO. 03-13 SHEET 63 OF 271

P.200612-01

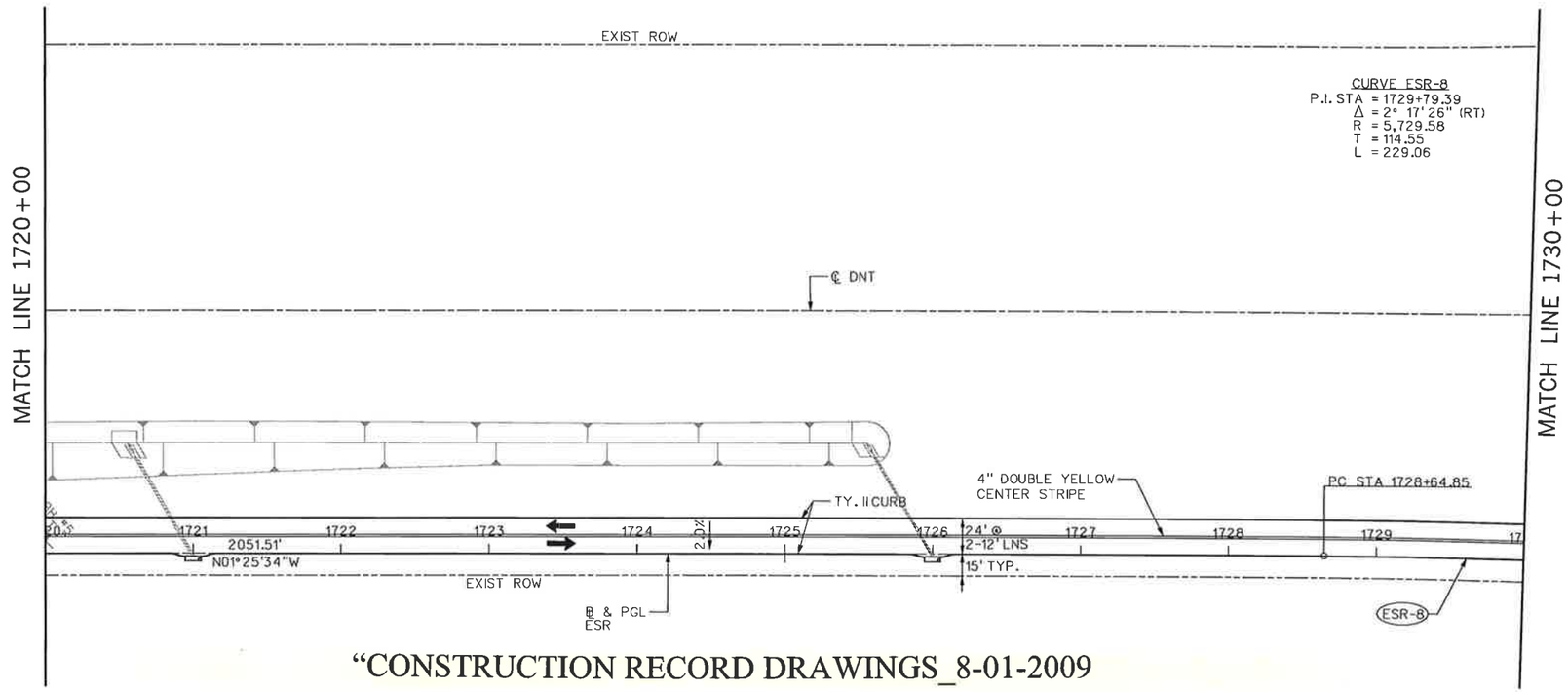

"CONSTRUCTION RECORD DRAWINGS_8-01-2009

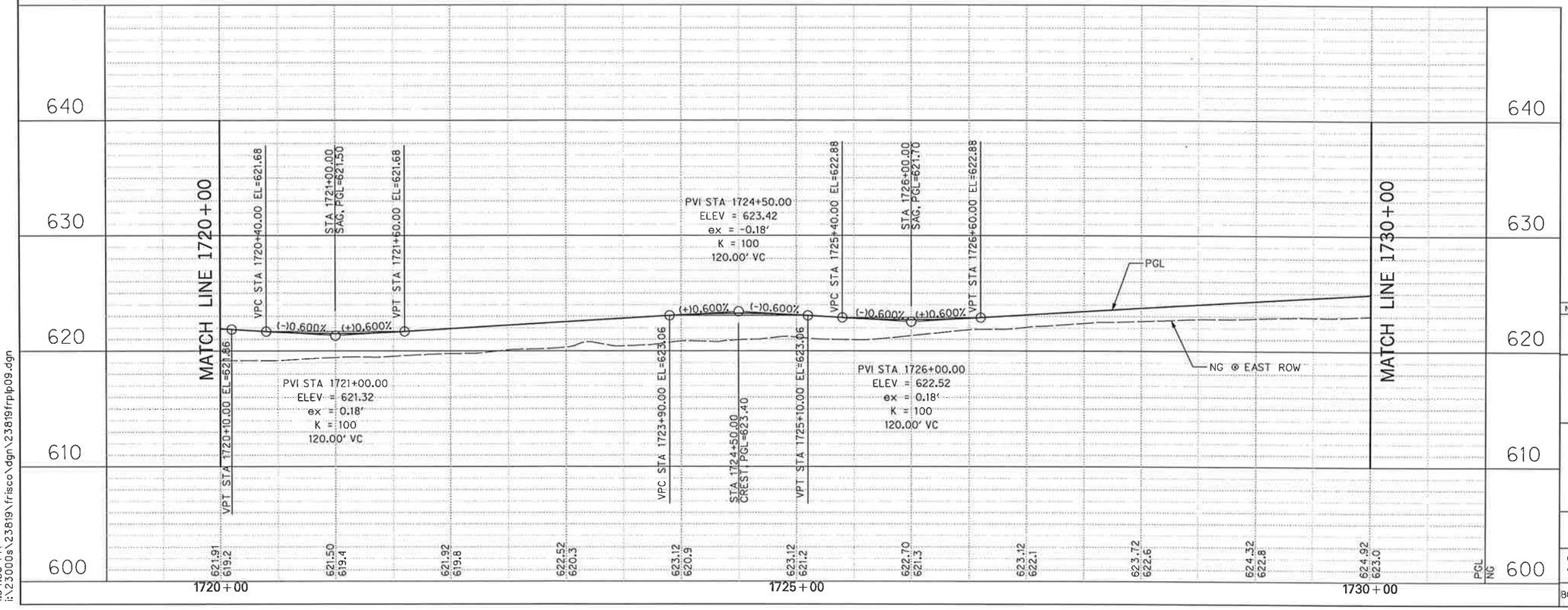

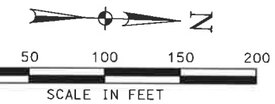

LEGEND

- PGL — PROFILE GRADE LINE
- EXISTING TRAFFIC LANE
- PROPOSED TRAFFIC LANE
- FUTURE TRAFFIC LANE
- # — SOIL BORING
- CP# — CONTROL POINT / BENCHMARK

EXISTING UTILITIES

- —TEL— BURIED PHONE
- —OHE— OVHD. ELECTRIC
- POWER POLE
- GUY WIRE
- FH — FIRE HYDRANT
- WM — WATER METER
- WV — WATER VALVE
- WMH — WATER MANHOLE

NOTES:

1. EXISTING UTILITES SHOWN ARE APPROXIMATE. CONTRACTOR SHALL CONFIRM PRESENCE AND LOCATION OF ALL UTILITIES PRIOR TO WORK.

2. SEE GEOMETRIC LAYOUT & SURVEY CONTROL DATA FOR HORIZONTAL DATUM & BENCHMARK INFORMATION.

3. SEE DRAINAGE PLAN FOR CURB INLET LOCATIONS.

4. SEE TYPICAL SECTIONS FOR ROADWAY PAVING DETAILS.

NO.	DATE	REVISION	APPROV.

DALLAS PARKWAY EXTENSION

COLLIN COUNTY

PAVING PLAN – PROFILE
EAST SERVICE ROAD
STA 1720+00 TO STA 1730+00

9

Halff Associates, Inc.
ENGINEERS · ARCHITECTS · SCIENTISTS · PLANNERS · SURVEYORS

DRAWN MDB DATE DEC 2006 DESIGNED DDS DATE
CHECKED DDS DATE SCALE 1"=100'(H), 1"=10'(V)

BOND PROJECT NO. 03-13 SHEET 64 OF 271

P-200612-01

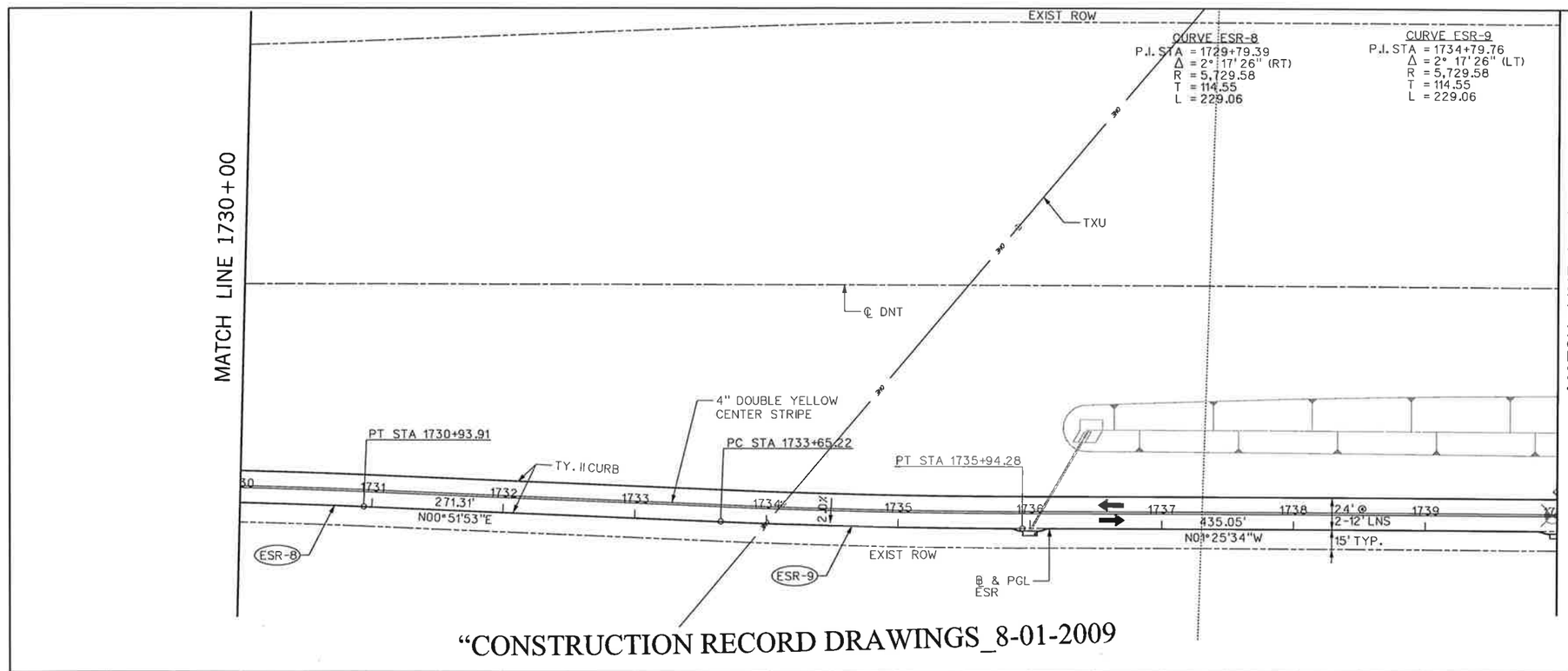

"CONSTRUCTION RECORD DRAWINGS_8-01-2009

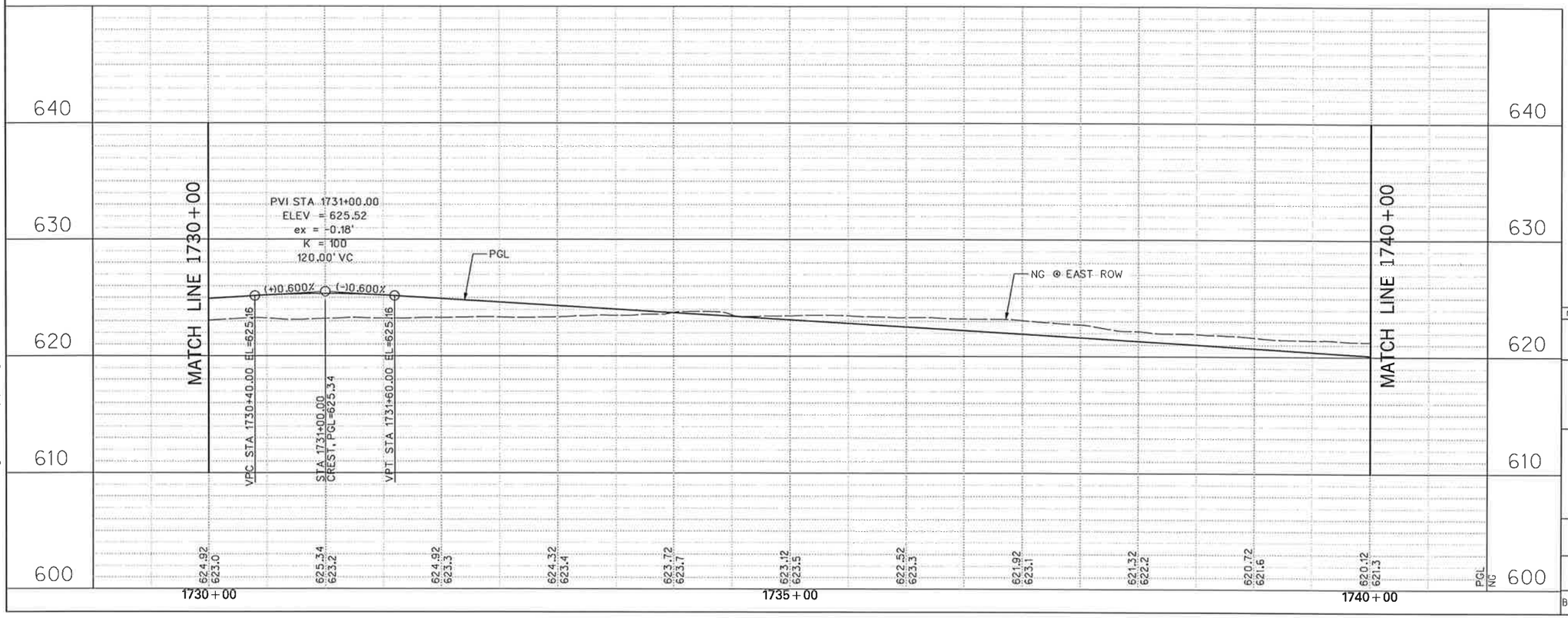

0 50 100 150 200
SCALE IN FEET

LEGEND

- PGL — PROFILE GRADE LINE
- EXISTING TRAFFIC LANE
- PROPOSED TRAFFIC LANE
- FUTURE TRAFFIC LANE
- SOIL BORING #
- CONTROL POINT / BENCHMARK CP#

EXISTING UTILITIES

- —TEL— BURIED PHONE
- —OHE— OVHD. ELECTRIC
- POWER POLE
- GUY WIRE
- FH FIRE HYDRANT
- WM WATER METER
- WV WATER VALVE
- WMH WATER MANHOLE

NOTES:

1. EXISTING UTILITES SHOWN ARE APPROXIMATE. CONTRACTOR SHALL CONFIRM PRESENCE AND LOCATION OF ALL UTILITIES PRIOR TO WORK.
2. SEE GEOMETRIC LAYOUT & SURVEY CONTROL DATA FOR HORIZONTAL DATUM & BENCHMARK INFORMATION.
3. SEE DRAINAGE PLAN FOR CURB INLET LOCATIONS.
4. SEE TYPICAL SECTIONS FOR ROADWAY PAVING DETAILS.

STATE OF TEXAS
DENNIS D. SATRE
71590
REGISTERED PROFESSIONAL ENGINEER
12/28/06

NO.	DATE	REVISION	APPROV.

DALLAS PARKWAY EXTENSION

COLLIN COUNTY, TEXAS

PAVING PLAN – PROFILE
EAST SERVICE ROAD
STA 1730+00 TO STA 1740+00

10

Halff Associates, Inc.
ENGINEERS · ARCHITECTS · SCIENTISTS · PLANNERS · SURVEYORS

DRAWN	MDB	DATE DEC 2006	DESIGNED DDS DATE
CHECKED	DDS	DATE	SCALE 1"=100'(H), 1"=10'(V)

BOND PROJECT NO. 03-13 SHEET 65 OF 271

P200612-01

i:\23000s\23819\frisco\dgn\23819frplp11.dgn

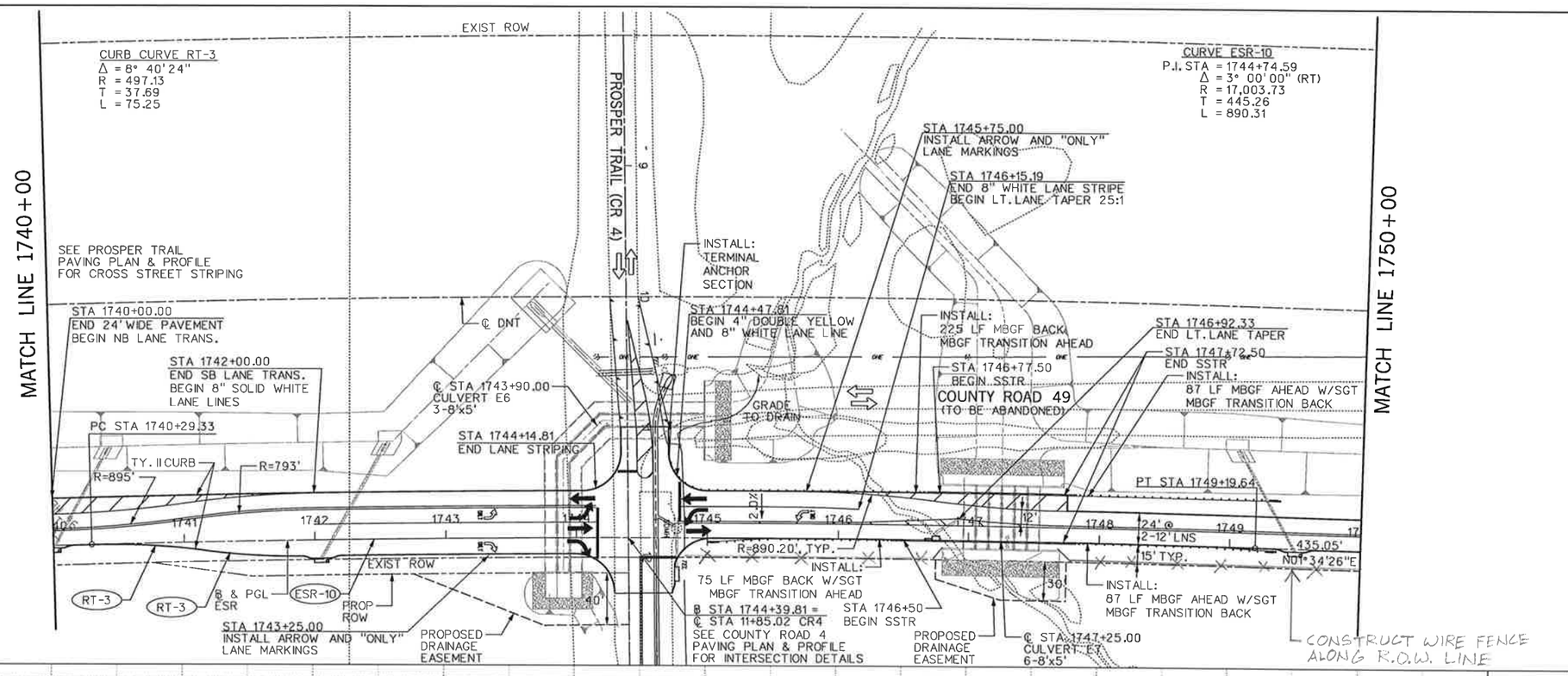

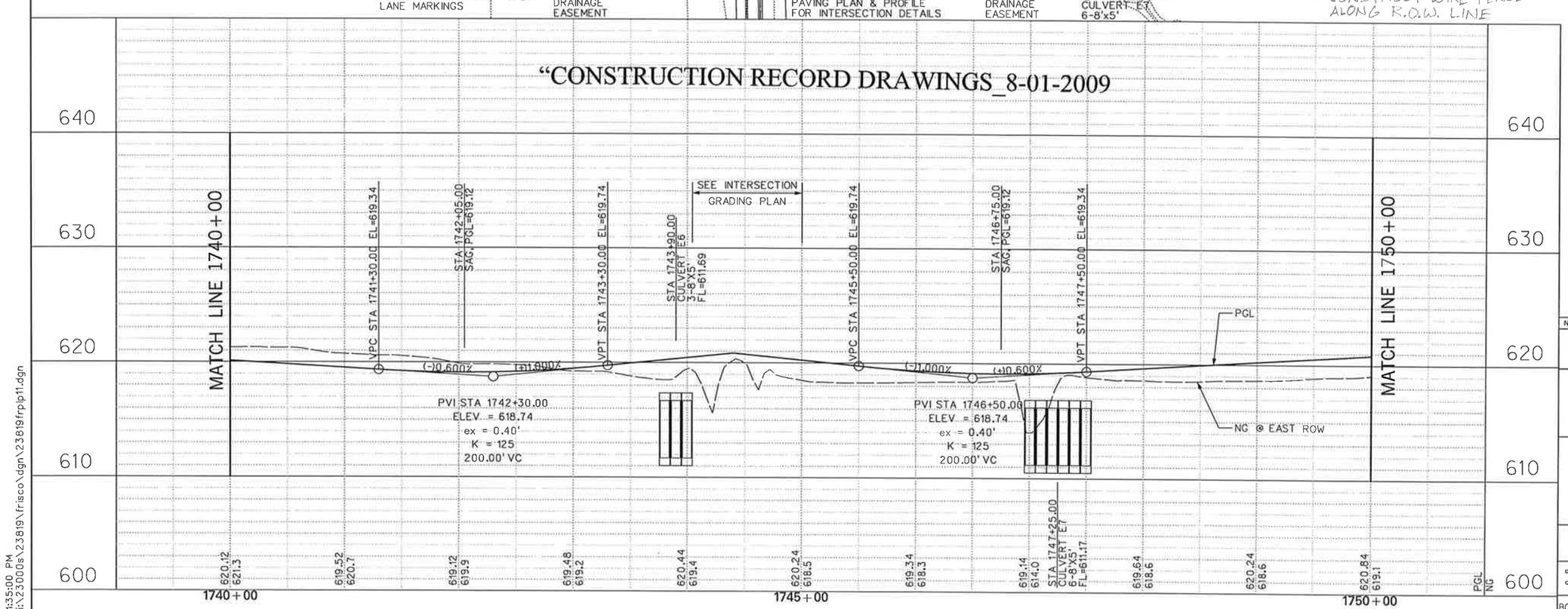

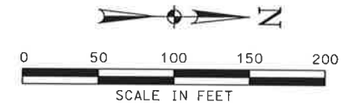

LEGEND

PGL	PROFILE GRADE LINE
⇨	EXISTING TRAFFIC LANE
➡	PROPOSED TRAFFIC LANE
⇢	FUTURE TRAFFIC LANE
#	SOIL BORING
CP#	CONTROL POINT / BENCHMARK

EXISTING UTILITIES

—TEL—	BURIED PHONE	FH	FIRE HYDRANT
—OHE—	OVHD. ELECTRIC	WM	WATER METER
⊗	POWER POLE	WV	WATER VALVE
—◇	GUY WIRE	WMH	WATER MANHOLE

NOTES:

1. EXISTING UTILITES SHOWN ARE APPROXIMATE. CONTRACTOR SHALL CONFIRM PRESENCE AND LOCATION OF ALL UTILITIES PRIOR TO WORK.

2. SEE GEOMETRIC LAYOUT & SURVEY CONTROL DATA FOR HORIZONTAL DATUM & BENCHMARK INFORMATION.

3. SEE DRAINAGE PLAN FOR CURB INLET LOCATIONS.

4. SEE TYPICAL SECTIONS FOR ROADWAY PAVING DETAILS.

STATE OF TEXAS
DENNIS D. SATRE
71590
REGISTERED
PROFESSIONAL ENGINEER
Dennis D. Satre 12/28/06

NO.	DATE	REVISION	APPROV.

DALLAS PARKWAY EXTENSION

COLLIN COUNTY

PAVING PLAN – PROFILE
EAST SERVICE ROAD
STA 1740+00 TO STA 1750+00

11

Halff Associates, Inc.
ENGINEERS · ARCHITECTS · SCIENTISTS · PLANNERS · SURVEYORS

DRAWN MDB DATE DEC 2006 | DESIGNED DDS DATE
CHECKED DDS DATE | SCALE 1"=100'(H), 1"=10'(V)

BOND PROJECT NO. 03-13 SHEET 66 OF 271

P-200612.01

1:35:00 PM
i:\23000s\23819\frisco\dgn\23819frplp11.dgn
12/27/2006 1:35:00 PM

i:\23000s\23819\frisco\dgn\23819frplp12.dgn

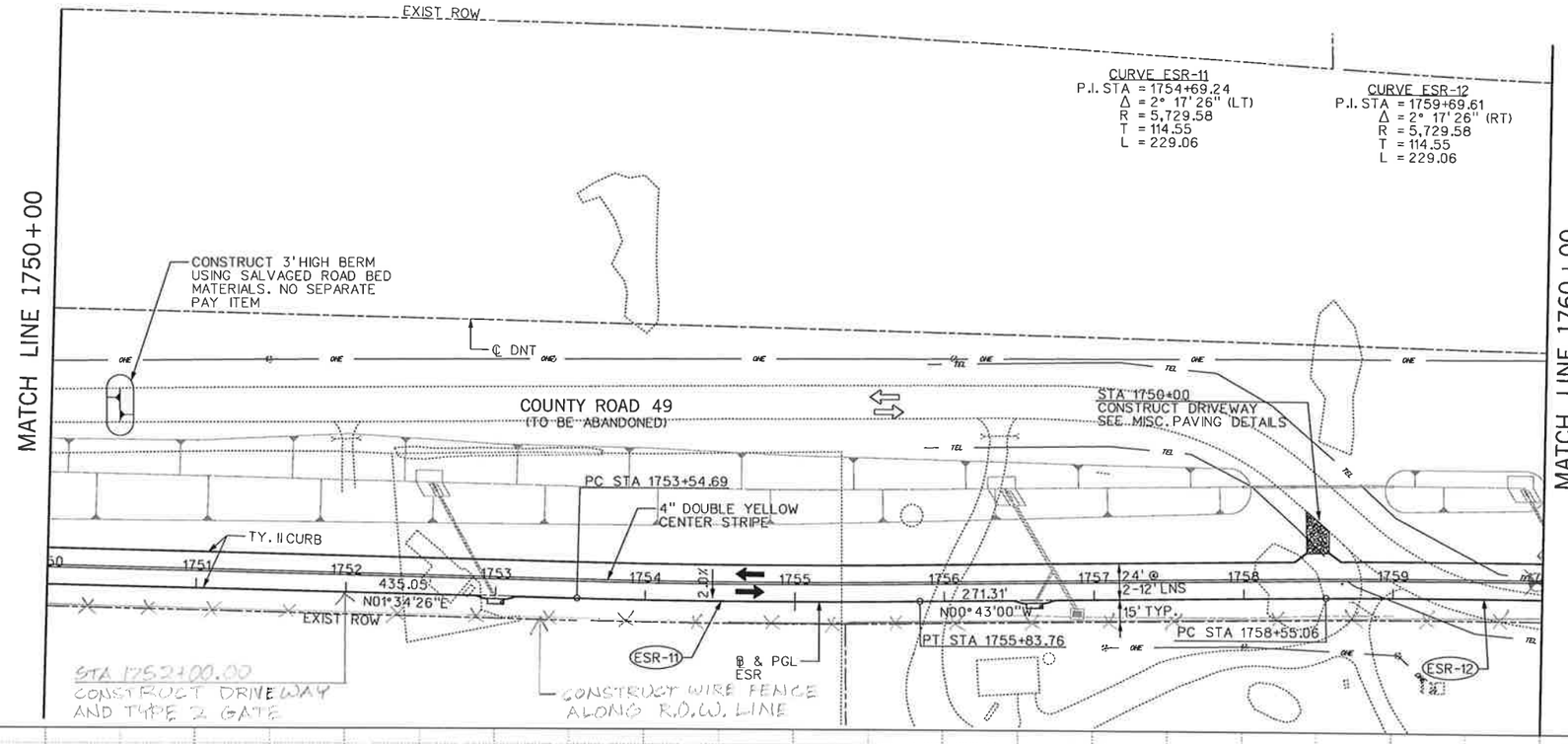

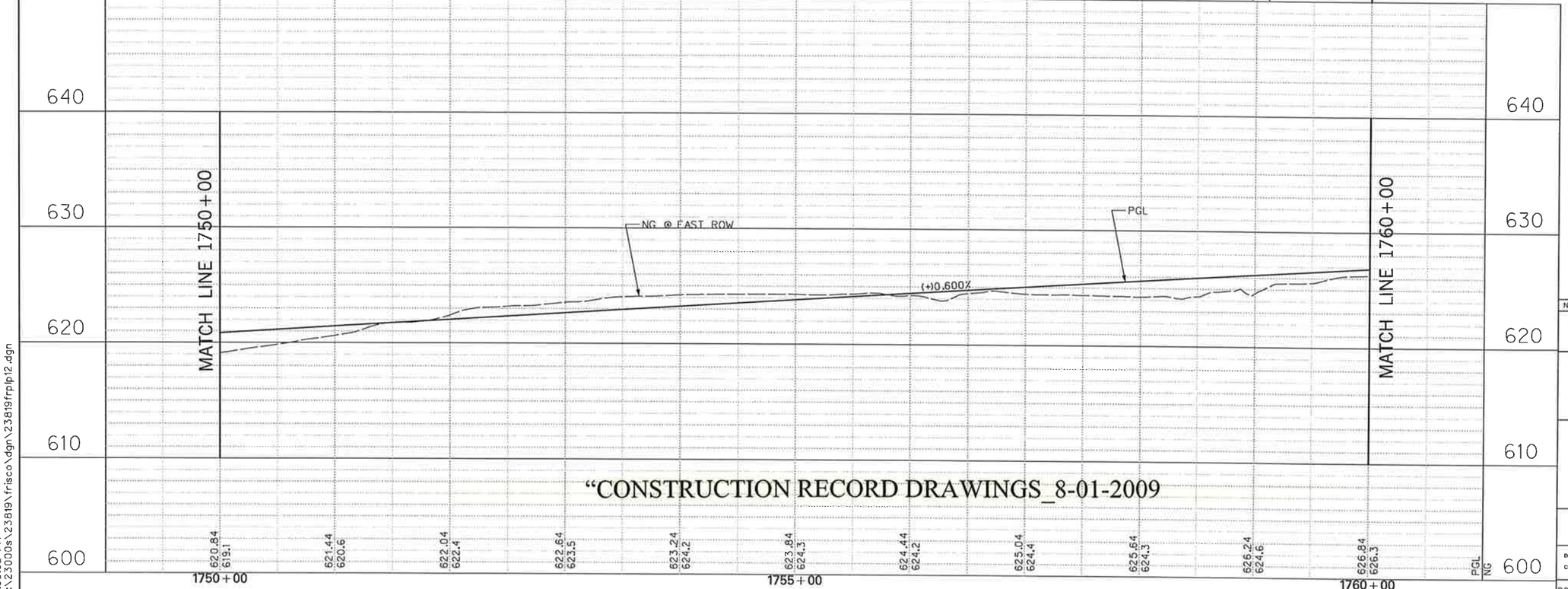

"CONSTRUCTION RECORD DRAWINGS_8-01-2009

0 50 100 150 200
SCALE IN FEET

LEGEND

- PGL — PROFILE GRADE LINE
- EXISTING TRAFFIC LANE
- PROPOSED TRAFFIC LANE
- FUTURE TRAFFIC LANE
- SOIL BORING #
- CONTROL POINT / BENCHMARK CP#

EXISTING UTILITIES

- TEL — BURIED PHONE
- OHE — OVHD. ELECTRIC
- POWER POLE
- GUY WIRE
- FH FIRE HYDRANT
- WM WATER METER
- WV WATER VALVE
- WMH WATER MANHOLE

NOTES:

1. EXISTING UTILITES SHOWN ARE APPROXIMATE. CONTRACTOR SHALL CONFIRM PRESENCE AND LOCATION OF ALL UTILITIES PRIOR TO WORK.
2. SEE GEOMETRIC LAYOUT & SURVEY CONTROL DATA FOR HORIZONTAL DATUM & BENCHMARK INFORMATION.
3. SEE DRAINAGE PLAN FOR CURB INLET LOCATIONS.
4. SEE TYPICAL SECTIONS FOR ROADWAY PAVING DETAILS.

STATE OF TEXAS
DENNIS D. SATRE
71590
REGISTERED PROFESSIONAL ENGINEER
12/28/06

NO.	DATE	REVISION	APPROV.

DALLAS PARKWAY EXTENSION

COLLIN COUNTY

PAVING PLAN – PROFILE
EAST SERVICE ROAD
STA 1750+00 TO STA 1760+00

12

Halff Associates, Inc.
ENGINEERS · ARCHITECTS · SCIENTISTS · PLANNERS · SURVEYORS

DRAWN MDB DATE DEC 2006 | DESIGNED DDS DATE
CHECKED DDS DATE | SCALE 1"=100'(H), 1"=10'(V)

BOND PROJECT NO. 03-13 SHEET 67 OF 271

P-200612-01

1:35:02 PM
i:\23000s\23819\frisco\dgn\23819frplp12.dgn
12/27/2006 1:35:02 PM

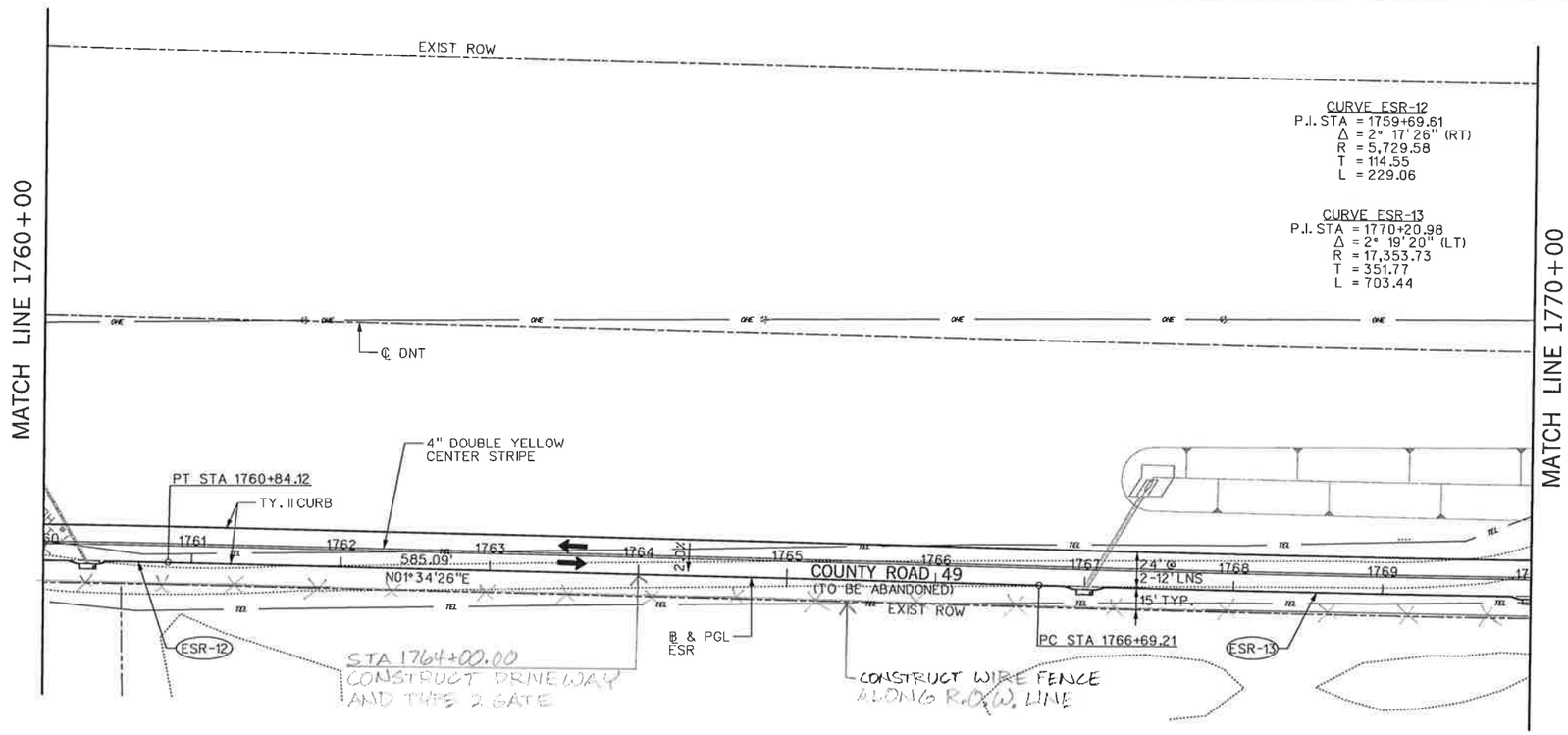

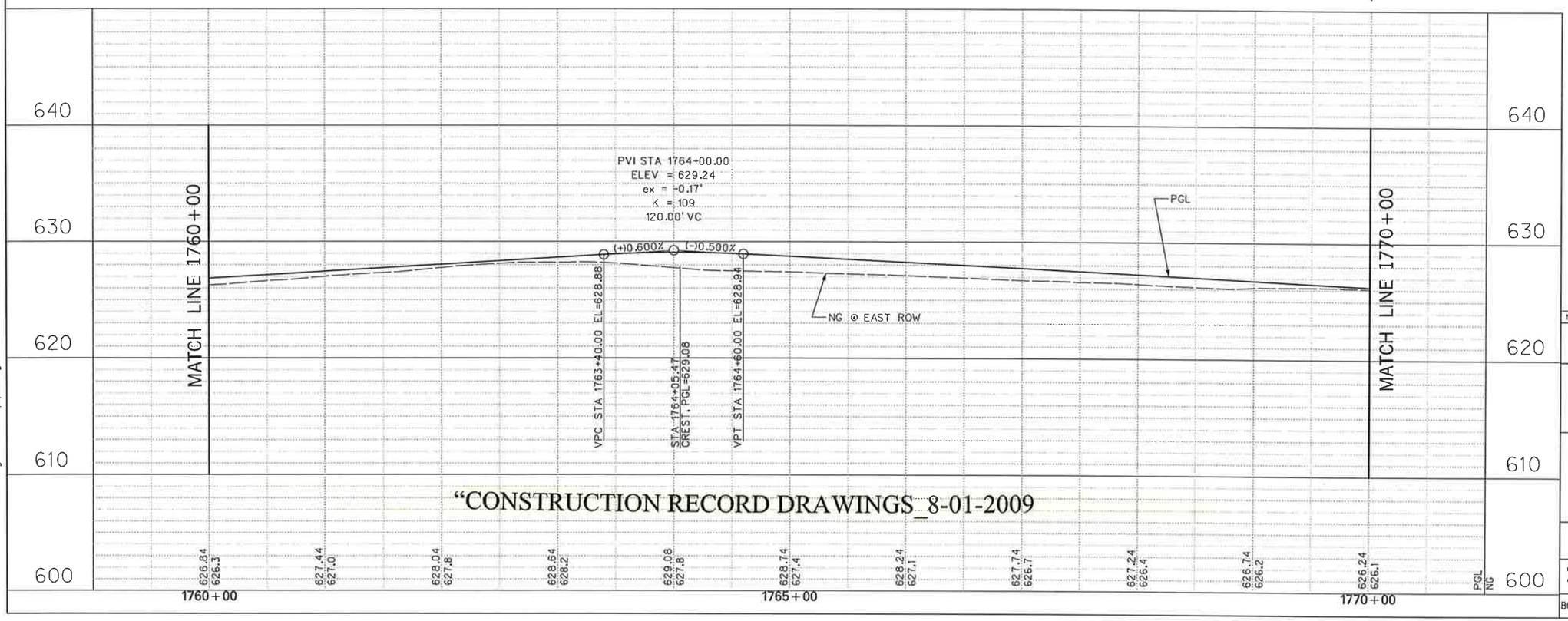

"CONSTRUCTION RECORD DRAWINGS_8-01-2009

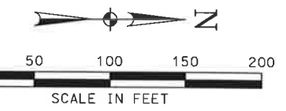

LEGEND

PGL	PROFILE GRADE LINE
⇨	EXISTING TRAFFIC LANE
➡	PROPOSED TRAFFIC LANE
⇨	FUTURE TRAFFIC LANE
T#	SOIL BORING
CP#	CONTROL POINT / BENCHMARK

EXISTING UTILITIES

—TEL—	BURIED PHONE	FH	FIRE HYDRANT
—OHE—	OVHD. ELECTRIC	WM	WATER METER
⊗	POWER POLE	WV	WATER VALVE
—)	GUY WIRE	WMH	WATER MANHOLE

NOTES:

1. EXISTING UTILITES SHOWN ARE APPROXIMATE. CONTRACTOR SHALL CONFIRM PRESENCE AND LOCATION OF ALL UTILITIES PRIOR TO WORK.

2. SEE GEOMETRIC LAYOUT & SURVEY CONTROL DATA FOR HORIZONTAL DATUM & BENCHMARK INFORMATION.

3. SEE DRAINAGE PLAN FOR CURB INLET LOCATIONS.

4. SEE TYPICAL SECTIONS FOR ROADWAY PAVING DETAILS.

NO.	DATE	REVISION	APPROV.

DALLAS PARKWAY EXTENSION

COLLIN COUNTY TX

PAVING PLAN – PROFILE
EAST SERVICE ROAD
STA 1760+00 TO STA 1770+00

13

Halff Associates, Inc.
ENGINEERS · ARCHITECTS · SCIENTISTS · PLANNERS · SURVEYORS

DRAWN MDB DATE DEC 2006 | DESIGNED DDS DATE
CHECKED DDS DATE | SCALE 1"=100'(H), 1"=10'(V)

BOND PROJECT NO. 03-13 SHEET 68 OF 271

P-200612-01

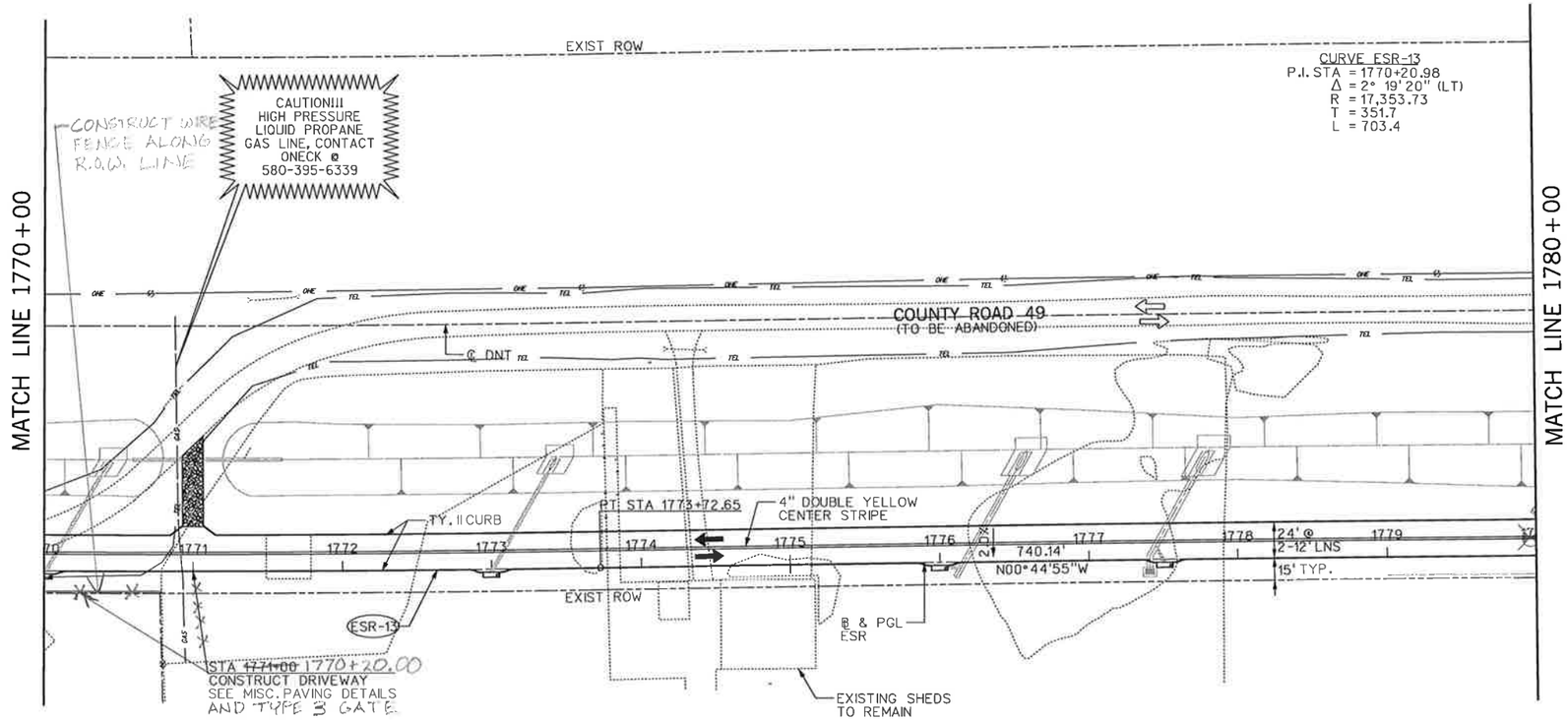

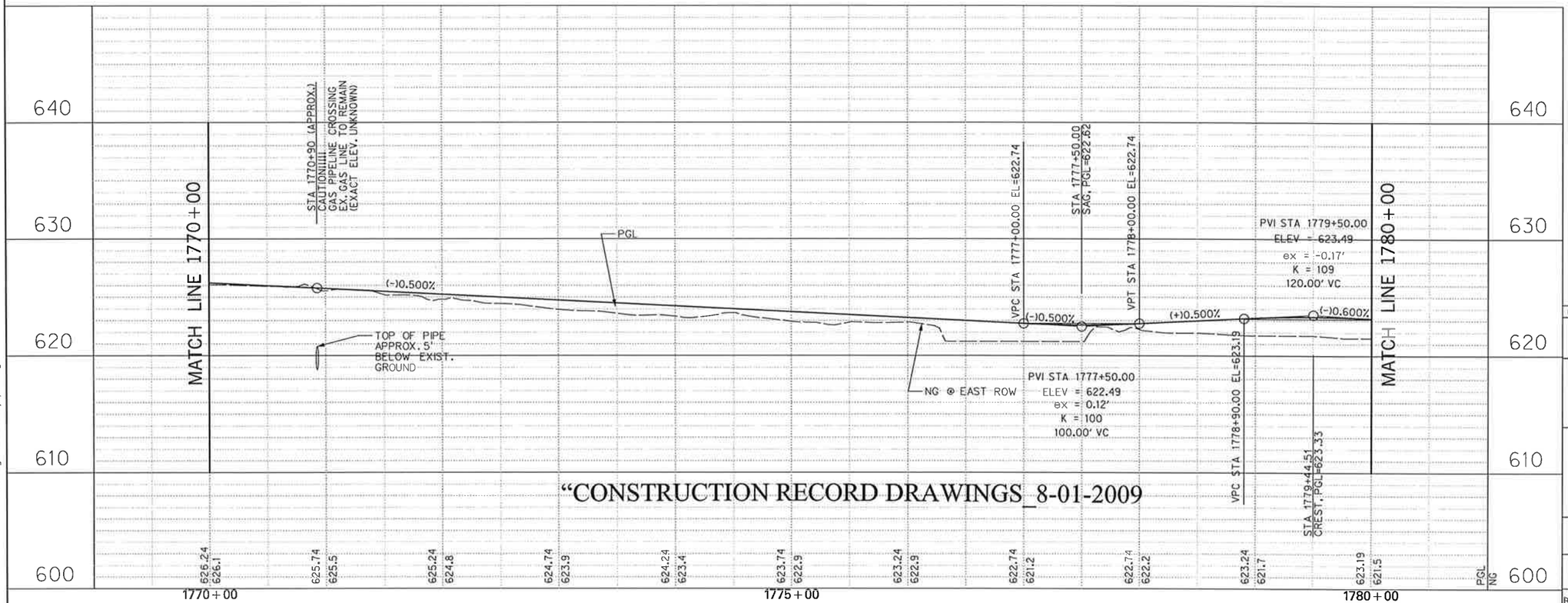

"CONSTRUCTION RECORD DRAWINGS 8-01-2009

0 50 100 150 200
SCALE IN FEET

LEGEND

- PGL — PROFILE GRADE LINE
- EXISTING TRAFFIC LANE
- PROPOSED TRAFFIC LANE
- FUTURE TRAFFIC LANE
- SOIL BORING #
- CONTROL POINT / BENCHMARK CP#

EXISTING UTILITIES

- —TEL— BURIED PHONE
- —OHE— OVHD. ELECTRIC
- POWER POLE
- GUY WIRE
- FH FIRE HYDRANT
- WM WATER METER
- WV WATER VALVE
- WMH WATER MANHOLE

NOTES:

1. EXISTING UTILITES SHOWN ARE APPROXIMATE. CONTRACTOR SHALL CONFIRM PRESENCE AND LOCATION OF ALL UTILITIES PRIOR TO WORK.
2. SEE GEOMETRIC LAYOUT & SURVEY CONTROL DATA FOR HORIZONTAL DATUM & BENCHMARK INFORMATION.
3. SEE DRAINAGE PLAN FOR CURB INLET LOCATIONS.
4. SEE TYPICAL SECTIONS FOR ROADWAY PAVING DETAILS.

STATE OF TEXAS
DENNIS D. SATRE
71590
REGISTERED PROFESSIONAL ENGINEER
12/28/06

NO.	DATE	REVISION	APPROV.

DALLAS PARKWAY EXTENSION

COLLIN COUNTY

PAVING PLAN – PROFILE
EAST SERVICE ROAD
STA 1770+00 TO STA 1780+00

14

Halff Associates, Inc.
ENGINEERS · ARCHITECTS · SCIENTISTS · PLANNERS · SURVEYORS

DRAWN MDB	DATE DEC 2006	DESIGNED DDS	DATE
CHECKED DDS	DATE	SCALE 1"=100'(H), 1"=10'(V)	

BOND PROJECT NO. 03-13 SHEET 69 OF 271

P-200612-01

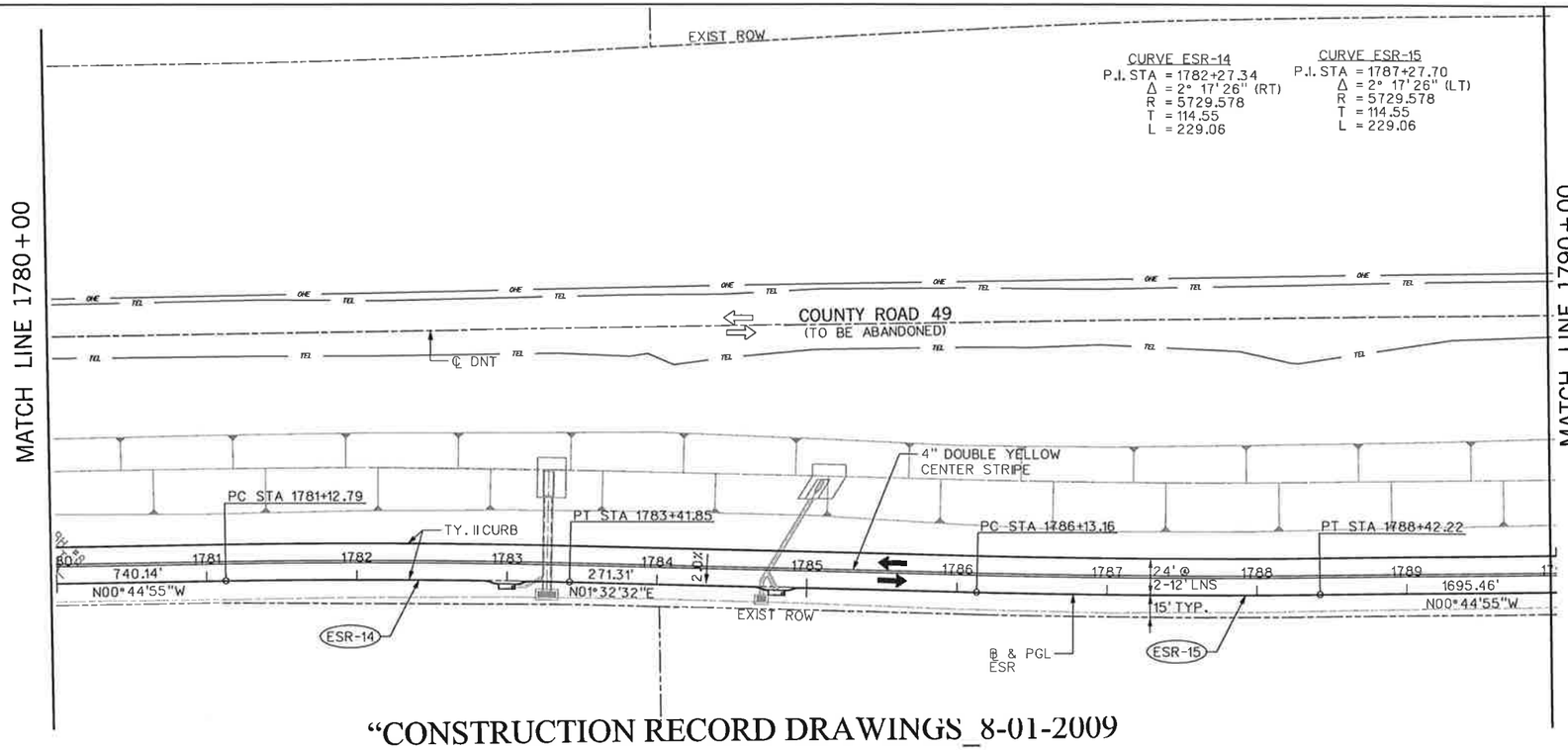

"CONSTRUCTION RECORD DRAWINGS_8-01-2009

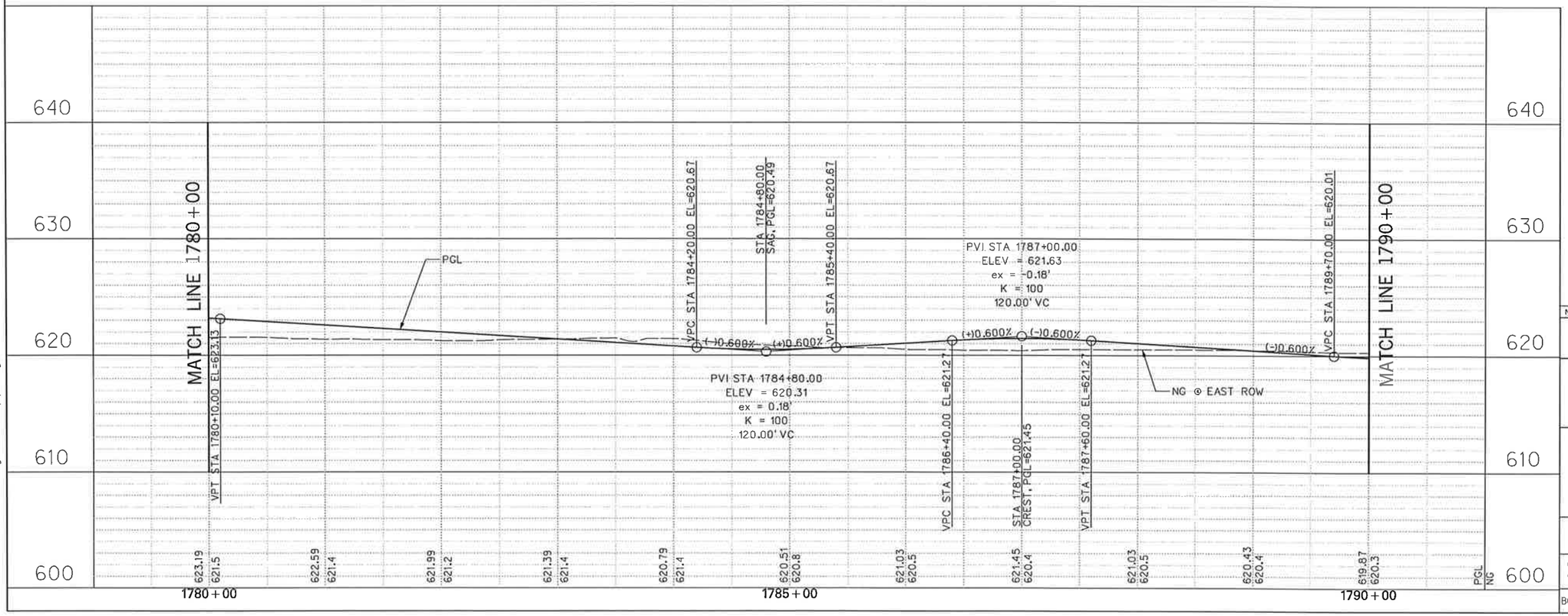

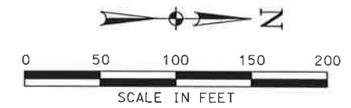

LEGEND

PGL	PROFILE GRADE LINE
⇨	EXISTING TRAFFIC LANE
➡	PROPOSED TRAFFIC LANE
⇨	FUTURE TRAFFIC LANE
#	SOIL BORING
CP#	CONTROL POINT / BENCHMARK

EXISTING UTILITIES

—TEL—	BURIED PHONE	FH	FIRE HYDRANT
—OHE—	OVHD. ELECTRIC	WM	WATER METER
⊗	POWER POLE	WV	WATER VALVE
→	GUY WIRE	WMH	WATER MANHOLE

NOTES:

1. EXISTING UTILITES SHOWN ARE APPROXIMATE. CONTRACTOR SHALL CONFIRM PRESENCE AND LOCATION OF ALL UTILITIES PRIOR TO WORK.

2. SEE GEOMETRIC LAYOUT & SURVEY CONTROL DATA FOR HORIZONTAL DATUM & BENCHMARK INFORMATION.

3. SEE DRAINAGE PLAN FOR CURB INLET LOCATIONS.

4. SEE TYPICAL SECTIONS FOR ROADWAY PAVING DETAILS.

NO.	DATE	REVISION	APPROV.

DALLAS PARKWAY EXTENSION

COLLIN COUNTY

PAVING PLAN – PROFILE
EAST SERVICE ROAD
STA 1780+00 TO STA 1790+00

15

Halff Associates, Inc.
ENGINEERS · ARCHITECTS · SCIENTISTS · PLANNERS · SURVEYORS

DRAWN MDB	DATE DEC 2006	DESIGNED DDS	DATE
CHECKED DDS	DATE	SCALE 1"=100'(H), 1"=10'(V)	

BOND PROJECT NO. 03-13 SHEET 70 OF 271

R-200612-01

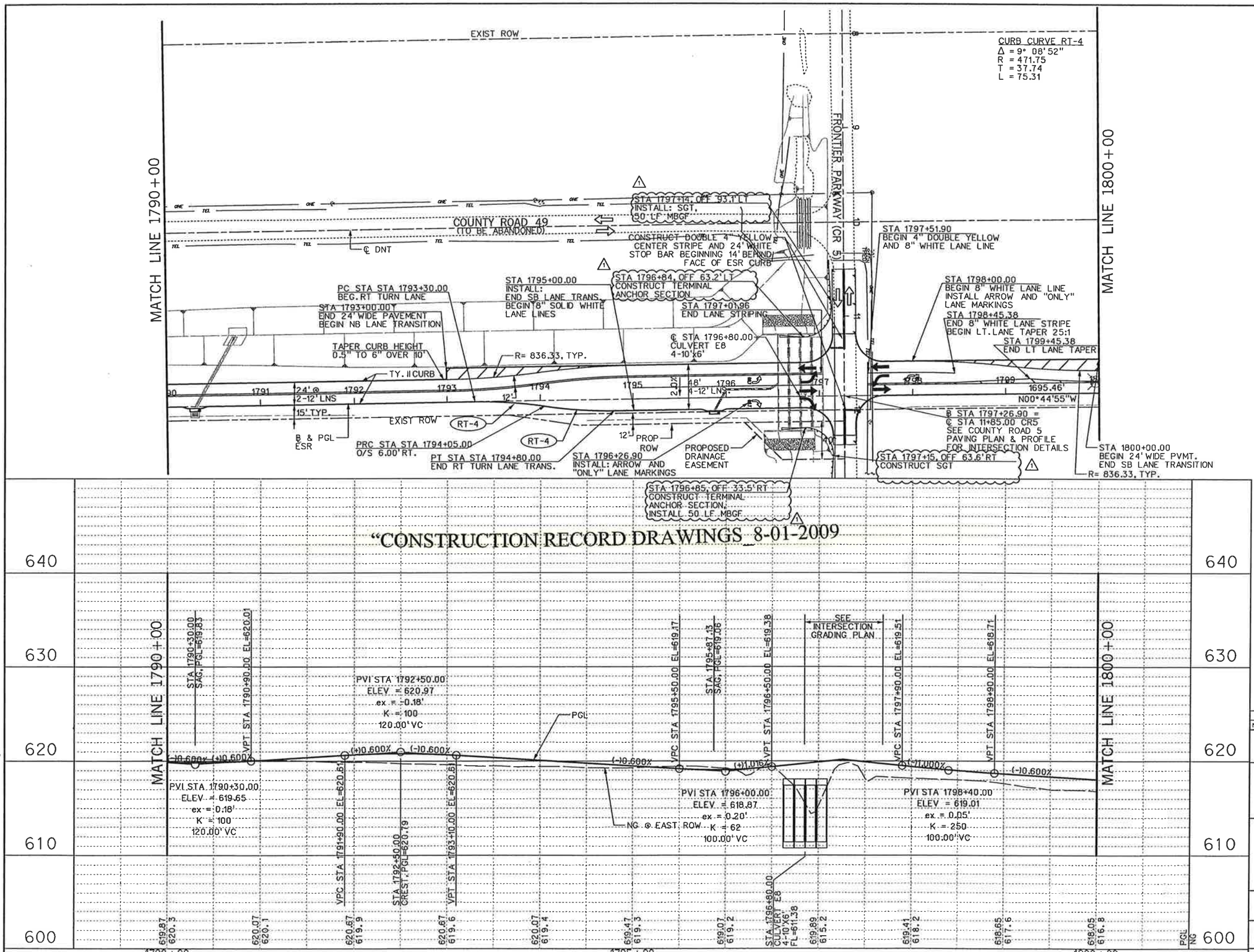

"CONSTRUCTION RECORD DRAWINGS" 8-01-2009

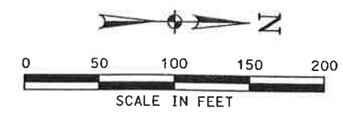

LEGEND

PGL	PROFILE GRADE LINE
⇨	EXISTING TRAFFIC LANE
➡	PROPOSED TRAFFIC LANE
⇨	FUTURE TRAFFIC LANE
T#	SOIL BORING
▲ CP#	CONTROL POINT / BENCHMARK

EXISTING UTILITIES

—TEL—	BURIED PHONE	FH	FIRE HYDRANT
—ONE—	OVHD. ELECTRIC	WM	WATER METER
⊗	POWER POLE	WV	WATER VALVE
—⊃	GUY WIRE	WMH	WATER MANHOLE

NOTES:

1. EXISTING UTILITES SHOWN ARE APPROXIMATE. CONTRACTOR SHALL CONFIRM PRESENCE AND LOCATION OF ALL UTILITIES PRIOR TO WORK.

2. SEE GEOMETRIC LAYOUT & SURVEY CONTROL DATA FOR HORIZONTAL DATUM & BENCHMARK INFORMATION.

3. SEE DRAINAGE PLAN FOR CURB INLET LOCATIONS.

4. SEE TYPICAL SECTIONS FOR ROADWAY PAVING DETAILS.

⚠1 5. FOR TERMINAL ANCHOR SECTION OVER CULVERT E8 USE 24" DIA X 1' CONCRETE SHAFT TO ANCHOR MBGF.

NO.	DATE	REVISION	APPROV.
1	6/6/08	MBGF REVISIONS - C.O. #4	D. SATRE

DALLAS PARKWAY EXTENSION

COLLIN COUNTY

PAVING PLAN – PROFILE
EAST SERVICE ROAD
STA 1790+00 TO STA 1800+00

16

Halff Associates, Inc.
ENGINEERS · ARCHITECTS · SCIENTISTS · PLANNERS · SURVEYORS

DRAWN MDB DATE DEC 2006 | DESIGNED DDS DATE
CHECKED DDS DATE | SCALE 1"=100'(H), 1"=10'(V)

BOND PROJECT NO. 03-13 SHEET 71 OF 271

6/6/2008 10:45:15 AM

10:45:15 AM
I:\23000s\23819\FRISCO\DGN\23819FRPLP16.dgn

P-200612-01

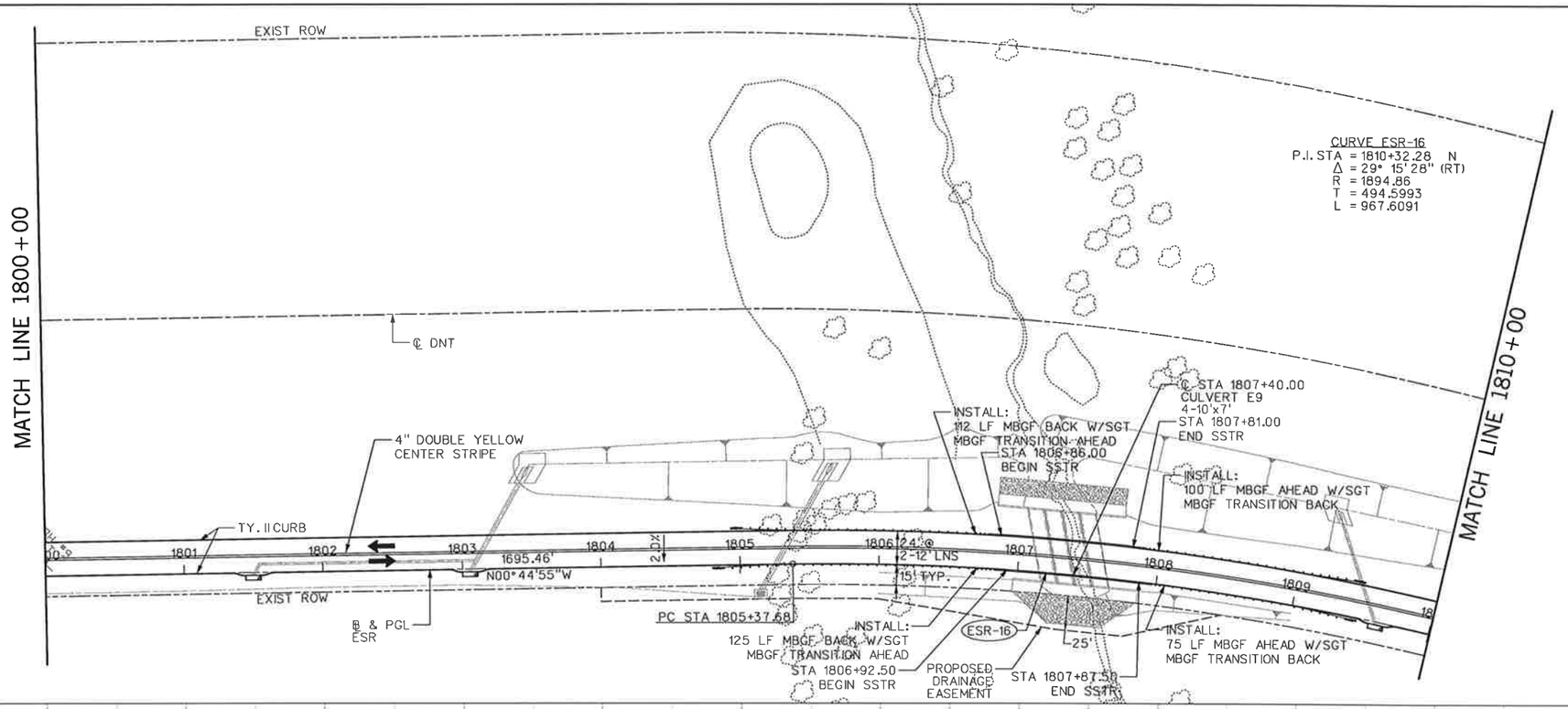

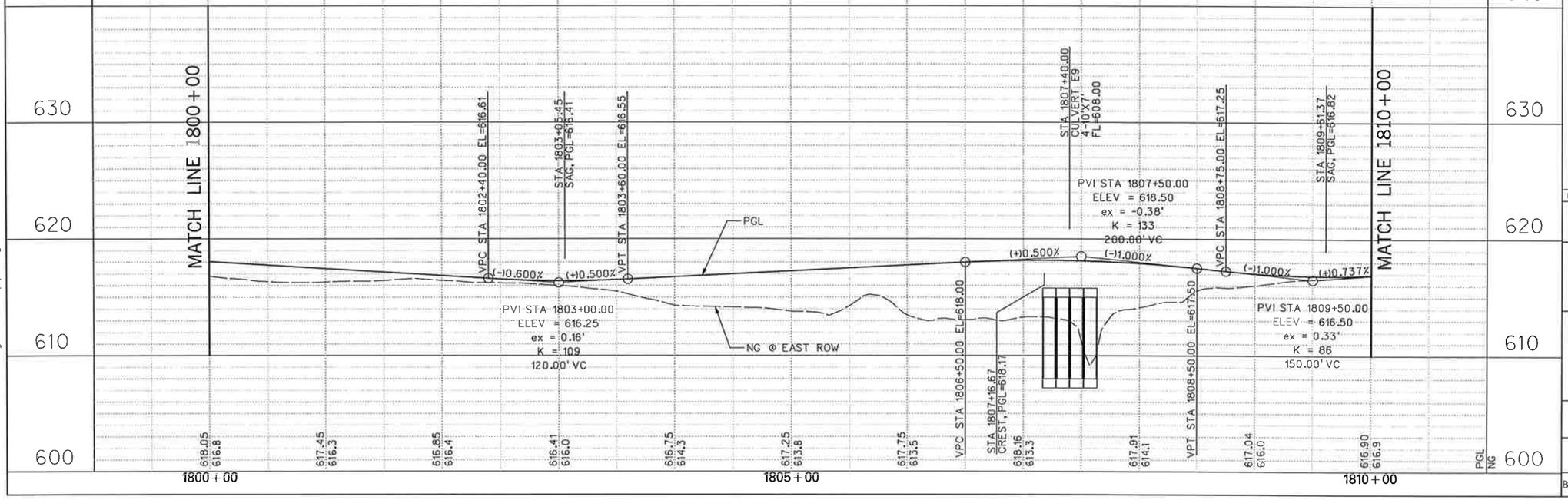

"CONSTRUCTION RECORD DRAWINGS_8-01-2009

0 50 100 150 200
SCALE IN FEET

LEGEND

- PGL — PROFILE GRADE LINE
- EXISTING TRAFFIC LANE
- PROPOSED TRAFFIC LANE
- FUTURE TRAFFIC LANE
- SOIL BORING
- CP# — CONTROL POINT / BENCHMARK

EXISTING UTILITIES

- —TEL— BURIED PHONE
- —OHE— OVHD. ELECTRIC
- POWER POLE
- GUY WIRE
- FH — FIRE HYDRANT
- WM — WATER METER
- WV — WATER VALVE
- WMH — WATER MANHOLE

NOTES:

1. EXISTING UTILITES SHOWN ARE APPROXIMATE. CONTRACTOR SHALL CONFIRM PRESENCE AND LOCATION OF ALL UTILITIES PRIOR TO WORK.
2. SEE GEOMETRIC LAYOUT & SURVEY CONTROL DATA FOR HORIZONTAL DATUM & BENCHMARK INFORMATION.
3. SEE DRAINAGE PLAN FOR CURB INLET LOCATIONS.
4. SEE TYPICAL SECTIONS FOR ROADWAY PAVING DETAILS.

STATE OF TEXAS
DENNIS D. SATRE
71590
REGISTERED PROFESSIONAL ENGINEER
Dennis D. Satre 12/28/06

NO.	DATE	REVISION	APPROV.

DALLAS PARKWAY EXTENSION

COLLIN COUNTY

PAVING PLAN – PROFILE
EAST SERVICE ROAD
STA 1800+00 TO STA 1810+00

17

Halff Associates, Inc.
ENGINEERS · ARCHITECTS · SCIENTISTS · PLANNERS · SURVEYORS

DRAWN MDB	DATE DEC 2006	DESIGNED DDS	DATE
CHECKED DDS	DATE	SCALE 1"=100'(H), 1"=10'(V)	

BOND PROJECT NO. 03-13 SHEET 72 OF 271

P-200612.01

12/27/2006 1:35:07 PM

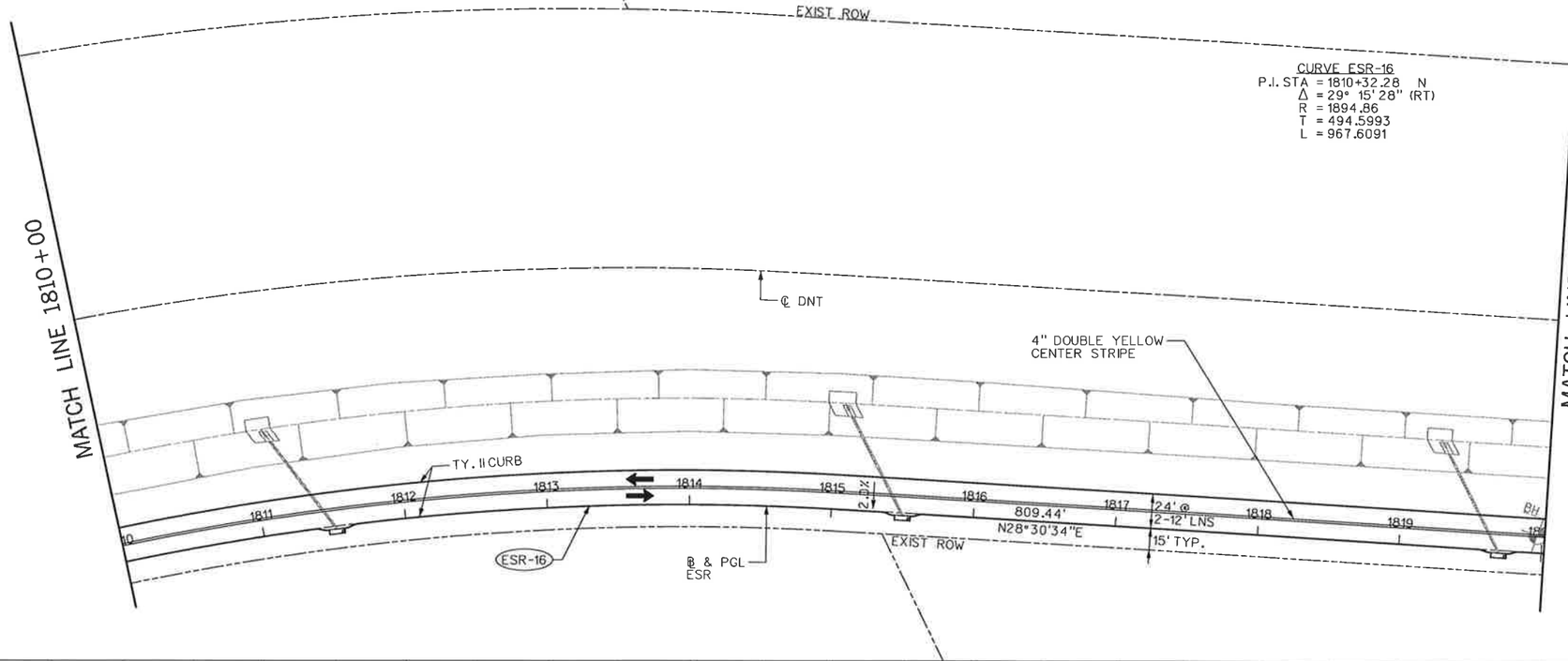

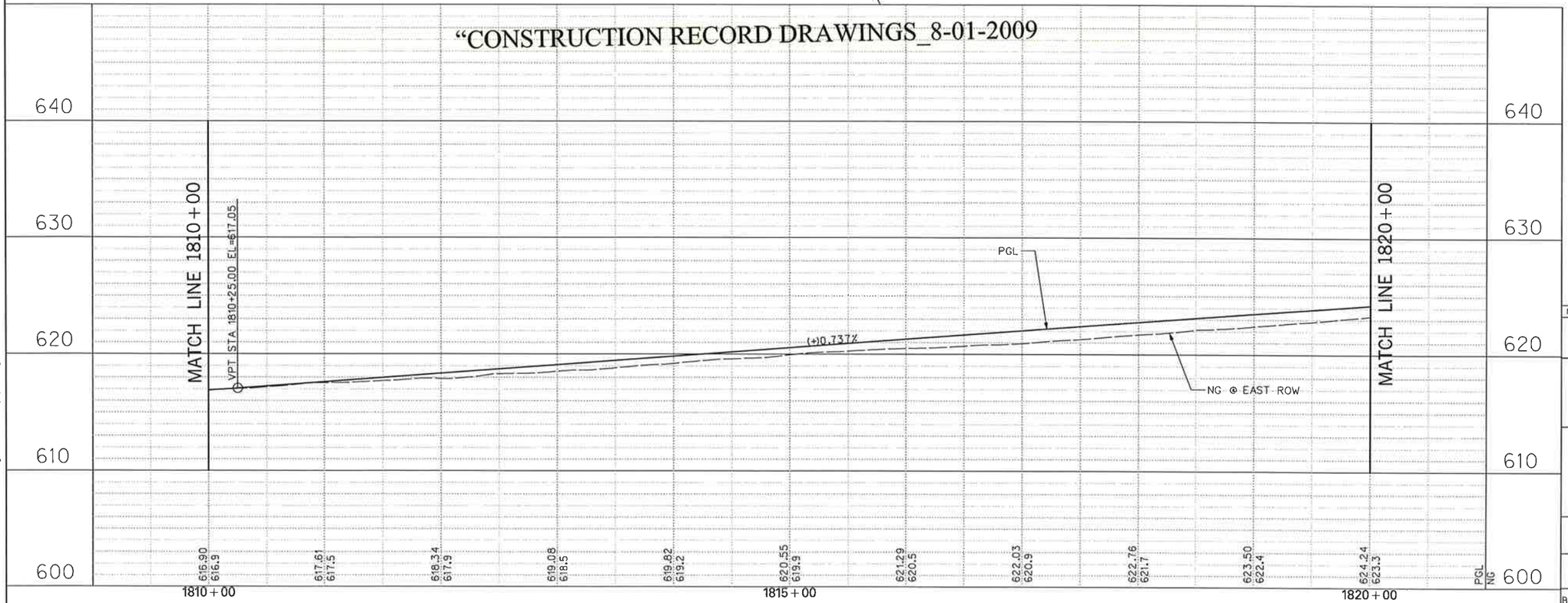

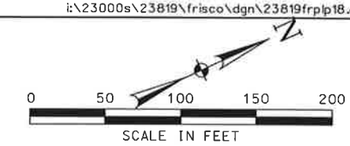

LEGEND

- PGL — PROFILE GRADE LINE
- EXISTING TRAFFIC LANE
- PROPOSED TRAFFIC LANE
- FUTURE TRAFFIC LANE
- # — SOIL BORING
- CP# — CONTROL POINT / BENCHMARK

EXISTING UTILITIES

- —TEL— BURIED PHONE
- —OHE— OVHD. ELECTRIC
- POWER POLE
- GUY WIRE
- FH — FIRE HYDRANT
- WM — WATER METER
- WV — WATER VALVE
- WMH — WATER MANHOLE

NOTES:

1. EXISTING UTILITES SHOWN ARE APPROXIMATE. CONTRACTOR SHALL CONFIRM PRESENCE AND LOCATION OF ALL UTILITIES PRIOR TO WORK.

2. SEE GEOMETRIC LAYOUT & SURVEY CONTROL DATA FOR HORIZONTAL DATUM & BENCHMARK INFORMATION.

3. SEE DRAINAGE PLAN FOR CURB INLET LOCATIONS.

4. SEE TYPICAL SECTIONS FOR ROADWAY PAVING DETAILS.

STATE OF TEXAS
DENNIS D. SATRE
71590
REGISTERED PROFESSIONAL ENGINEER
Dennis D. Satre
12/28/06

NO.	DATE	REVISION	APPROV.

DALLAS PARKWAY EXTENSION

COLLIN COUNTY

PAVING PLAN – PROFILE
EAST SERVICE ROAD
STA 1810+00 TO STA 1820+00

18

Halff Associates, Inc.
ENGINEERS · ARCHITECTS · SCIENTISTS · PLANNERS · SURVEYORS

DRAWN MDB DATE DEC 2006 DESIGNED DDS DATE
CHECKED DDS DATE SCALE 1"=10'(H), 1"=10'(V)

BOND PROJECT NO. 03-13 SHEET 73 OF 271

P200612-01

1:35:08 PM
i:\23000s\23819\frisco\dgn\23819frplp18.dgn

12/27/2006 12:00:01 PM

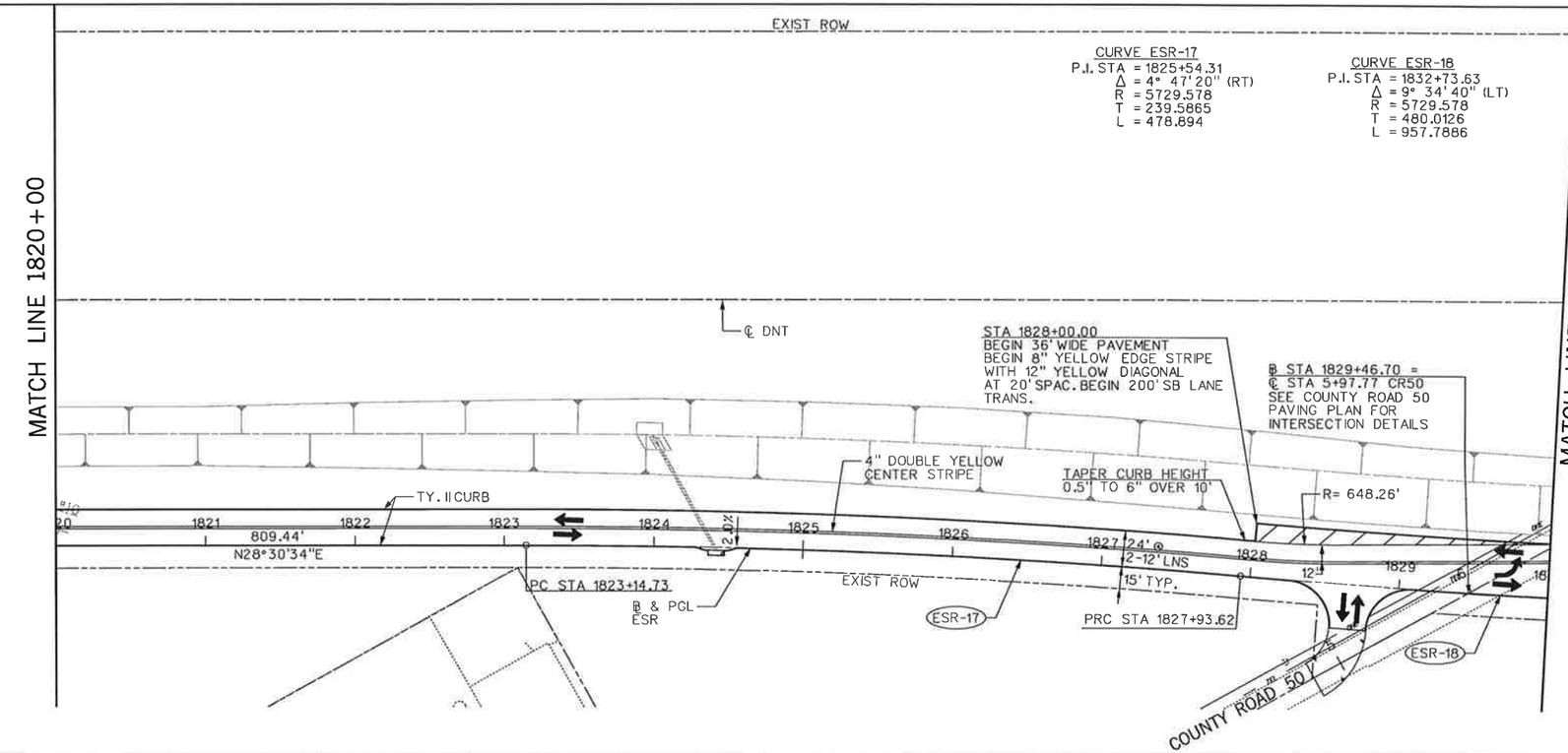

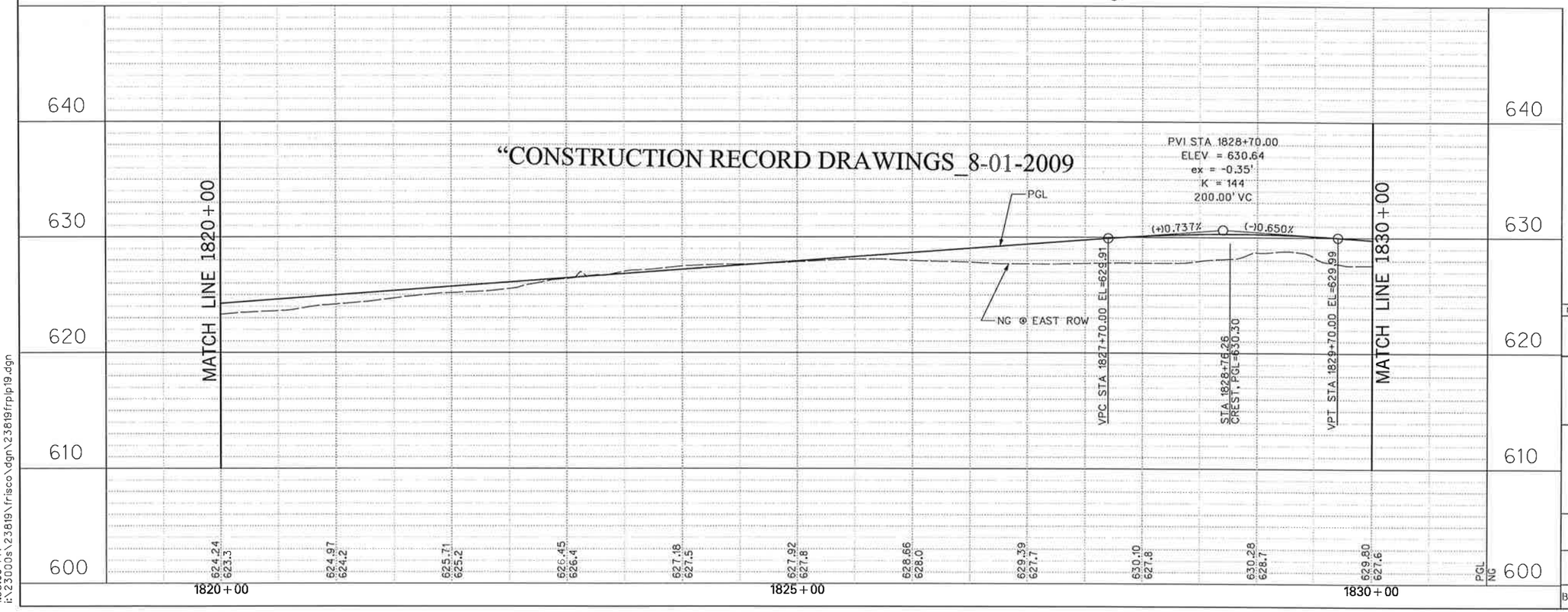

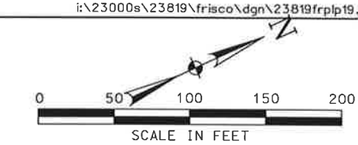

LEGEND

PGL	PROFILE GRADE LINE
⇨	EXISTING TRAFFIC LANE
➡	PROPOSED TRAFFIC LANE
⇨	FUTURE TRAFFIC LANE
#	SOIL BORING
CP#	CONTROL POINT / BENCHMARK

EXISTING UTILITIES

—TEL—	BURIED PHONE	FH	FIRE HYDRANT
—OHE—	OVHD. ELECTRIC	WM	WATER METER
⊗	POWER POLE	WV	WATER VALVE
⊸	GUY WIRE	WMH	WATER MANHOLE

NOTES:

1. EXISTING UTILITES SHOWN ARE APPROXIMATE. CONTRACTOR SHALL CONFIRM PRESENCE AND LOCATION OF ALL UTILITIES PRIOR TO WORK.

2. SEE GEOMETRIC LAYOUT & SURVEY CONTROL DATA FOR HORIZONTAL DATUM & BENCHMARK INFORMATION.

3. SEE DRAINAGE PLAN FOR CURB INLET LOCATIONS.

4. SEE TYPICAL SECTIONS FOR ROADWAY PAVING DETAILS.

STATE OF TEXAS
DENNIS D. SATRE
71590
PROFESSIONAL ENGINEER
Dennis D. Satre 12/28/06

NO.	DATE	REVISION	APPROV.

DALLAS PARKWAY EXTENSION

COLLIN COUNTY, TX

PAVING PLAN – PROFILE
EAST SERVICE ROAD
STA 1820+00 TO STA 1830+00

19

Halff Associates, Inc.
ENGINEERS · ARCHITECTS · SCIENTISTS · PLANNERS · SURVEYORS

DRAWN	MDB	DATE DEC 2006	DESIGNED DDS DATE
CHECKED	DDS	DATE	SCALE 1"=100'(H), 1"=10'(V)

BOND PROJECT NO. 03-13 SHEET 74 OF 271

P-200612-01

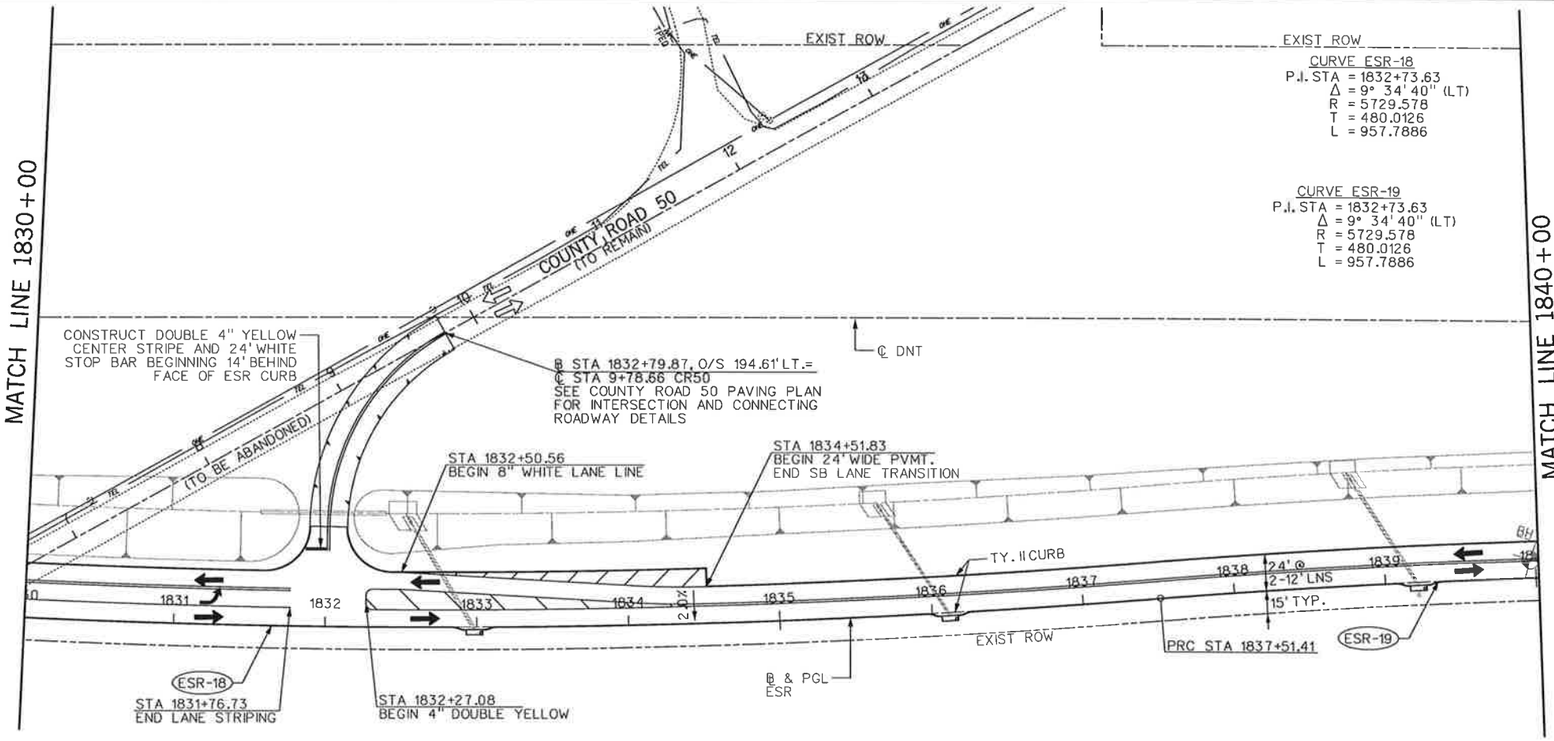

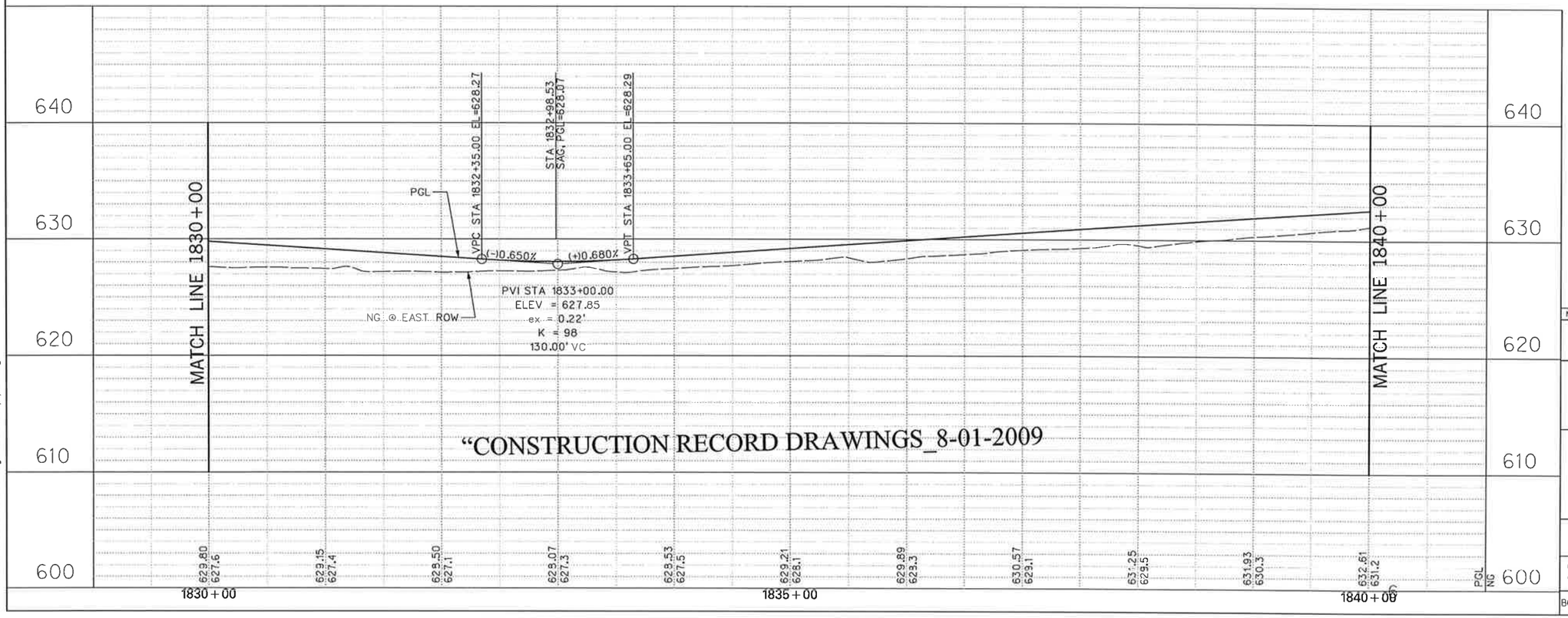

"CONSTRUCTION RECORD DRAWINGS_8-01-2009

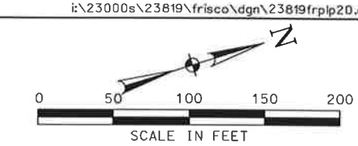

LEGEND

PGL	PROFILE GRADE LINE
⇨	EXISTING TRAFFIC LANE
➡	PROPOSED TRAFFIC LANE
⇨ (dashed)	FUTURE TRAFFIC LANE
#	SOIL BORING
CP#	CONTROL POINT / BENCHMARK

EXISTING UTILITIES

—TEL—	BURIED PHONE	FH	FIRE HYDRANT
—OHE—	OVHD. ELECTRIC	WM	WATER METER
⊗	POWER POLE	WV	WATER VALVE
—)	GUY WIRE	WMH	WATER MANHOLE

NOTES:

1. EXISTING UTILITES SHOWN ARE APPROXIMATE. CONTRACTOR SHALL CONFIRM PRESENCE AND LOCATION OF ALL UTILITIES PRIOR TO WORK.

2. SEE GEOMETRIC LAYOUT & SURVEY CONTROL DATA FOR HORIZONTAL DATUM & BENCHMARK INFORMATION.

3. SEE DRAINAGE PLAN FOR CURB INLET LOCATIONS.

4. SEE TYPICAL SECTIONS FOR ROADWAY PAVING DETAILS.

STATE OF TEXAS
DENNIS D. SATRE
71590
REGISTERED PROFESSIONAL ENGINEER
Dennis D. Satre 12/28/06

NO.	DATE	REVISION	APPROV.

DALLAS PARKWAY EXTENSION

COLLIN COUNTY, TEXAS

PAVING PLAN – PROFILE
EAST SERVICE ROAD
STA 1830+00 TO STA 1840+00

20

Halff Associates, Inc.
ENGINEERS · ARCHITECTS · SCIENTISTS · PLANNERS · SURVEYORS

DRAWN	MDB	DATE DEC 2006	DESIGNED DDS DATE
CHECKED	DDS	DATE	SCALE 1"=100'(H), 1"=10'(V)

BOND PROJECT NO. 03-13 SHEET 75 OF 271

P-200612-01

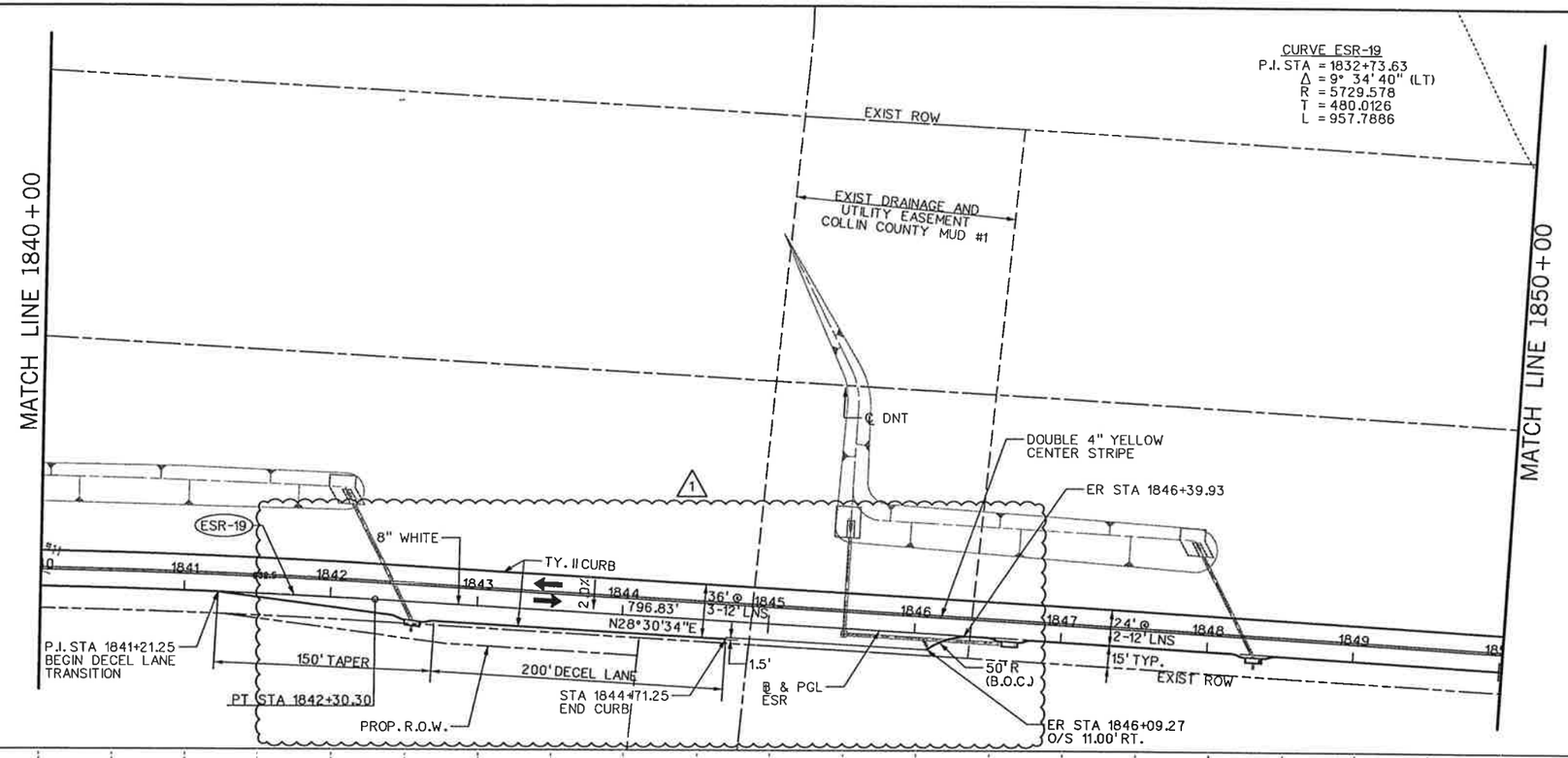

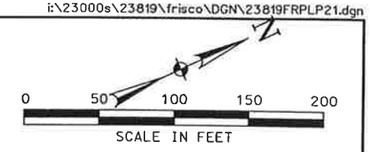

LEGEND

- PGL — PROFILE GRADE LINE
- EXISTING TRAFFIC LANE
- PROPOSED TRAFFIC LANE
- FUTURE TRAFFIC LANE
- # — SOIL BORING
- CP# — CONTROL POINT / BENCHMARK

EXISTING UTILITIES

- —TEL— BURIED PHONE
- —OHE— OVHD. ELECTRIC
- POWER POLE
- GUY WIRE
- FH — FIRE HYDRANT
- WM — WATER METER
- WV — WATER VALVE
- WMH — WATER MANHOLE

NOTES:

1. EXISTING UTILITES SHOWN ARE APPROXIMATE. CONTRACTOR SHALL CONFIRM PRESENCE AND LOCATION OF ALL UTILITIES PRIOR TO WORK.

2. SEE GEOMETRIC LAYOUT & SURVEY CONTROL DATA FOR HORIZONTAL DATUM & BENCHMARK INFORMATION.

3. SEE DRAINAGE PLAN FOR CURB INLET LOCATIONS.

4. SEE TYPICAL SECTIONS FOR ROADWAY PAVING DETAILS.

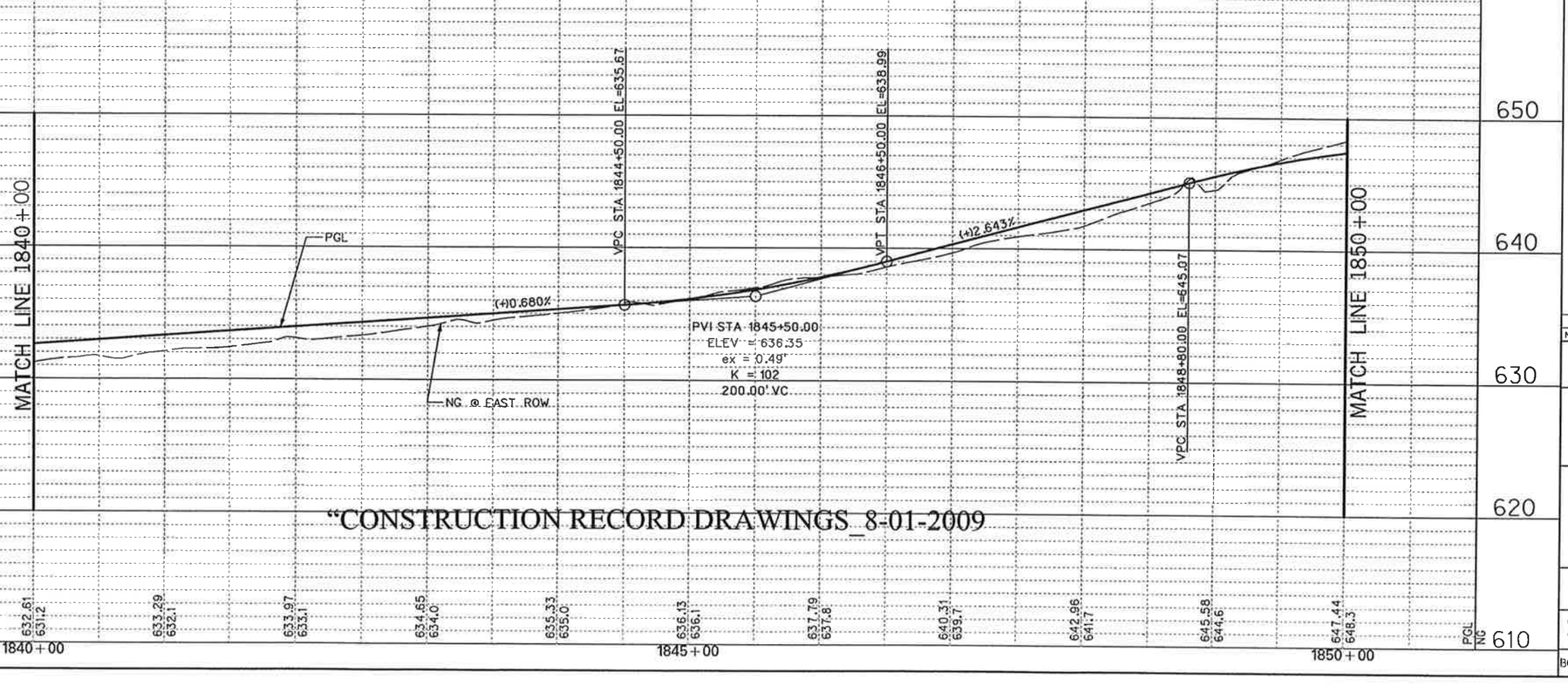

"CONSTRUCTION RECORD DRAWINGS_8-01-2009

DENNIS D. SATRE
71590
REGISTERED PROFESSIONAL ENGINEER
STATE OF TEXAS
11-13-07

NO.	DATE	REVISION	APPROV.
1	11/13/07	MOD FOR FUTURE STREET CONNECTION	D. SATRE

DALLAS PARKWAY EXTENSION

COLLIN COUNTY

PAVING PLAN -- PROFILE
EAST SERVICE ROAD
STA 1840+00 TO STA 1850+00

21

Halff Associates, Inc.
ENGINEERS · ARCHITECTS · SCIENTISTS · PLANNERS · SURVEYORS

DRAWN MDB DATE DEC 2006 | DESIGNED DDS DATE
CHECKED DDS DATE | SCALE 1"=100'(H), 1"=10'(V)

BOND PROJECT NO. 03-13 SHEET 76 OF 271

11:00:22 AM
i:\23000s\23819\frisco\DGN\23819FRPLP21.dgn

11/13/2007 11:00:22 AM

P-200612-01

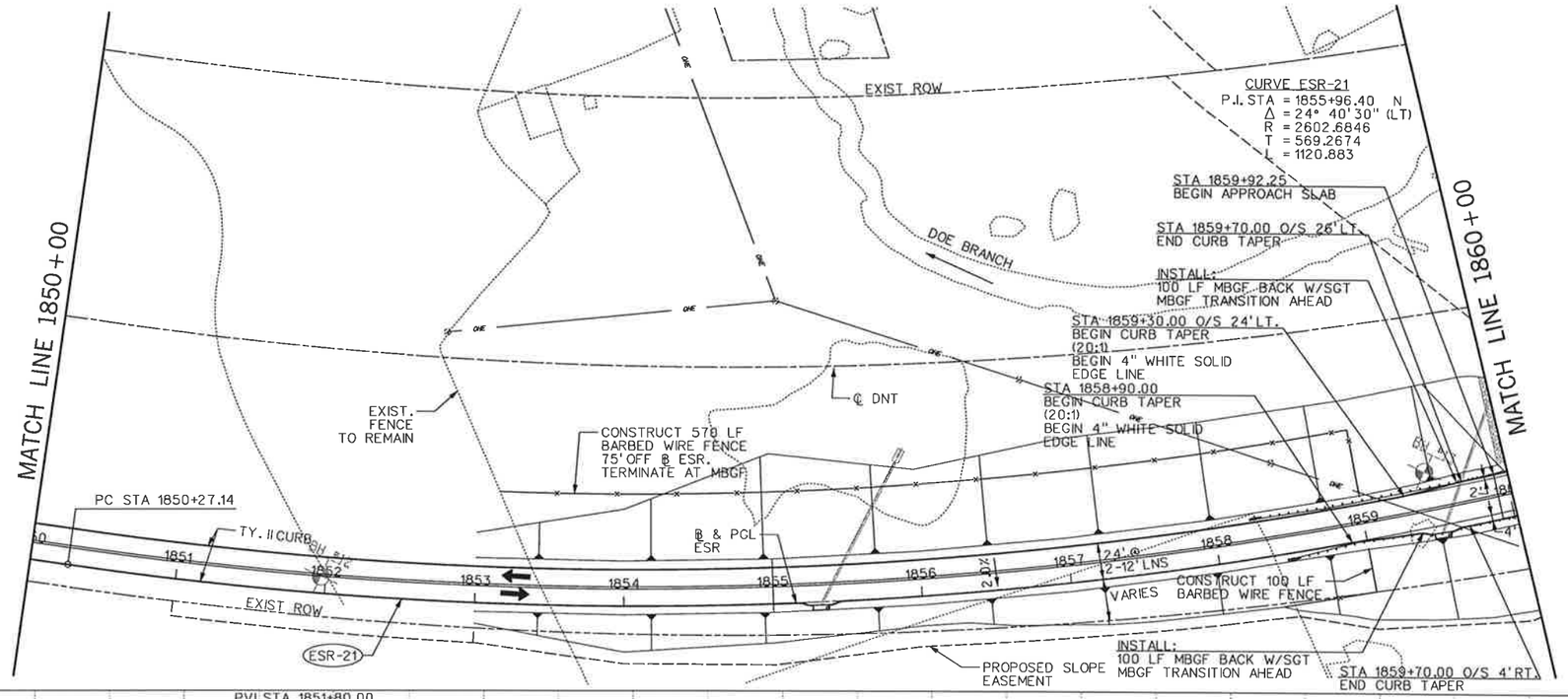

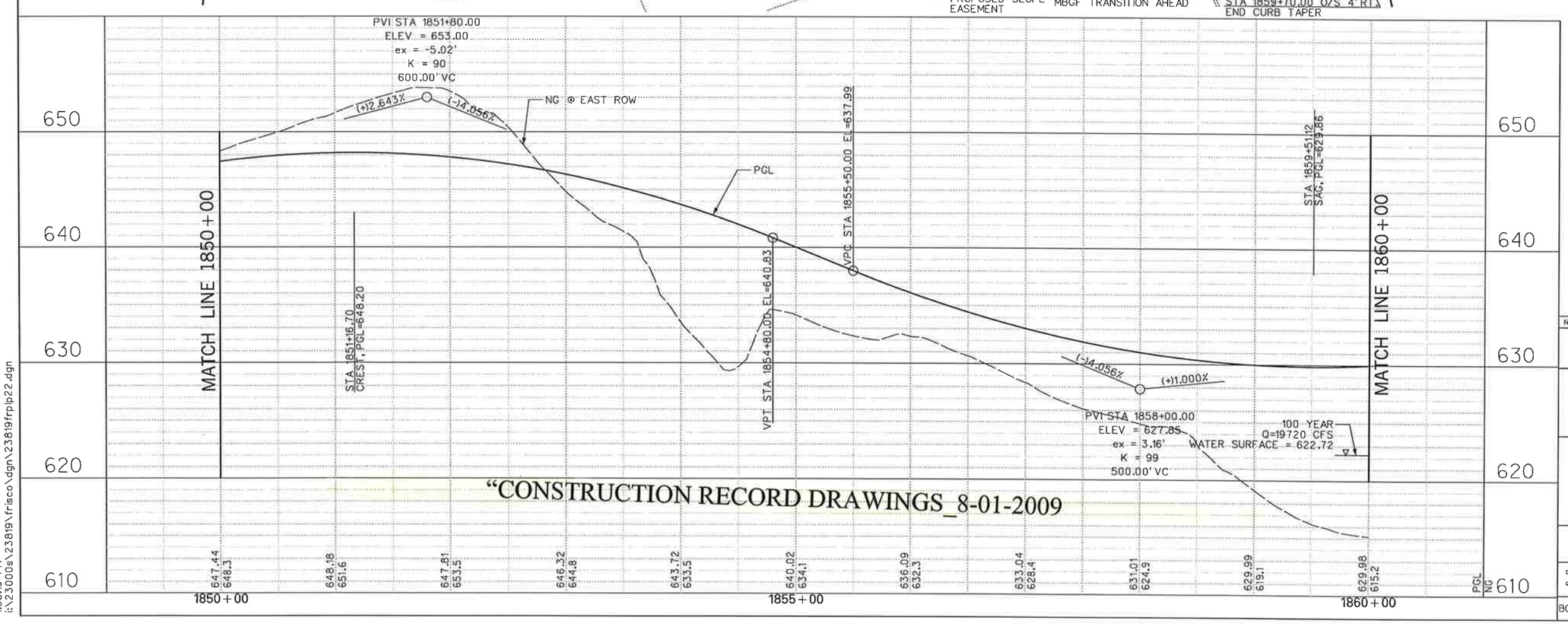

"CONSTRUCTION RECORD DRAWINGS_8-01-2009

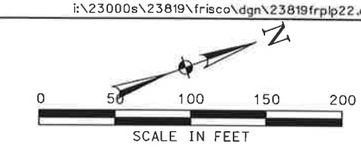

LEGEND

- PGL — PROFILE GRADE LINE
- EXISTING TRAFFIC LANE
- PROPOSED TRAFFIC LANE
- FUTURE TRAFFIC LANE
- SOIL BORING #
- CONTROL POINT / BENCHMARK CP#

EXISTING UTILITIES

- —TEL— BURIED PHONE
- —OHE— OVHD. ELECTRIC
- POWER POLE
- GUY WIRE
- FH FIRE HYDRANT
- WM WATER METER
- WV WATER VALVE
- WMH WATER MANHOLE

NOTES:

1. EXISTING UTILITES SHOWN ARE APPROXIMATE. CONTRACTOR SHALL CONFIRM PRESENCE AND LOCATION OF ALL UTILITIES PRIOR TO WORK.

2. SEE GEOMETRIC LAYOUT & SURVEY CONTROL DATA FOR HORIZONTAL DATUM & BENCHMARK INFORMATION.

3. SEE DRAINAGE PLAN FOR CURB INLET LOCATIONS.

4. SEE TYPICAL SECTIONS FOR ROADWAY PAVING DETAILS.

NO.	DATE	REVISION	APPROV.

DALLAS PARKWAY EXTENSION

COLLIN COUNTY, TEXAS

PAVING PLAN – PROFILE
EAST SERVICE ROAD
STA 1850+00 TO STA 1860+00

22

Halff Associates, Inc.
ENGINEERS · ARCHITECTS · SCIENTISTS · PLANNERS · SURVEYORS

DRAWN MDB DATE DEC 2006 DESIGNED DDS DATE
CHECKED DDS DATE SCALE 1"=100'(H), 1"=10'(V)

BOND PROJECT NO. 03-13 SHEET 77 OF 271

P-200612-01

CURVE ESR-21
P.I. STA = 1855+96.40
Δ = 24° 40' 30" (LT)
R = 2602.6846
T = 569.2674
L = 1120.883

CURVE ESR-34
P.I. STA = 1868+33.34
Δ = 12° 26' 29" (LT)
R = 2100
T = 228.9012
L = 456.0021

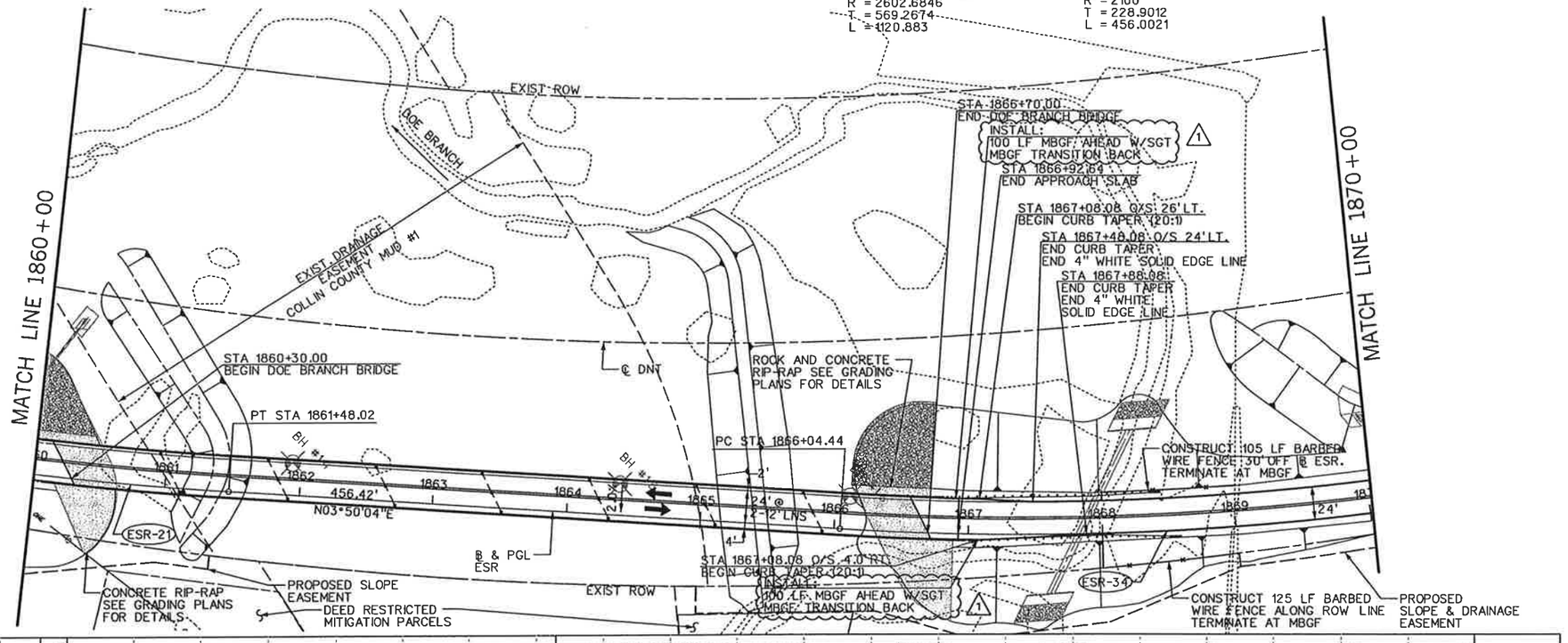

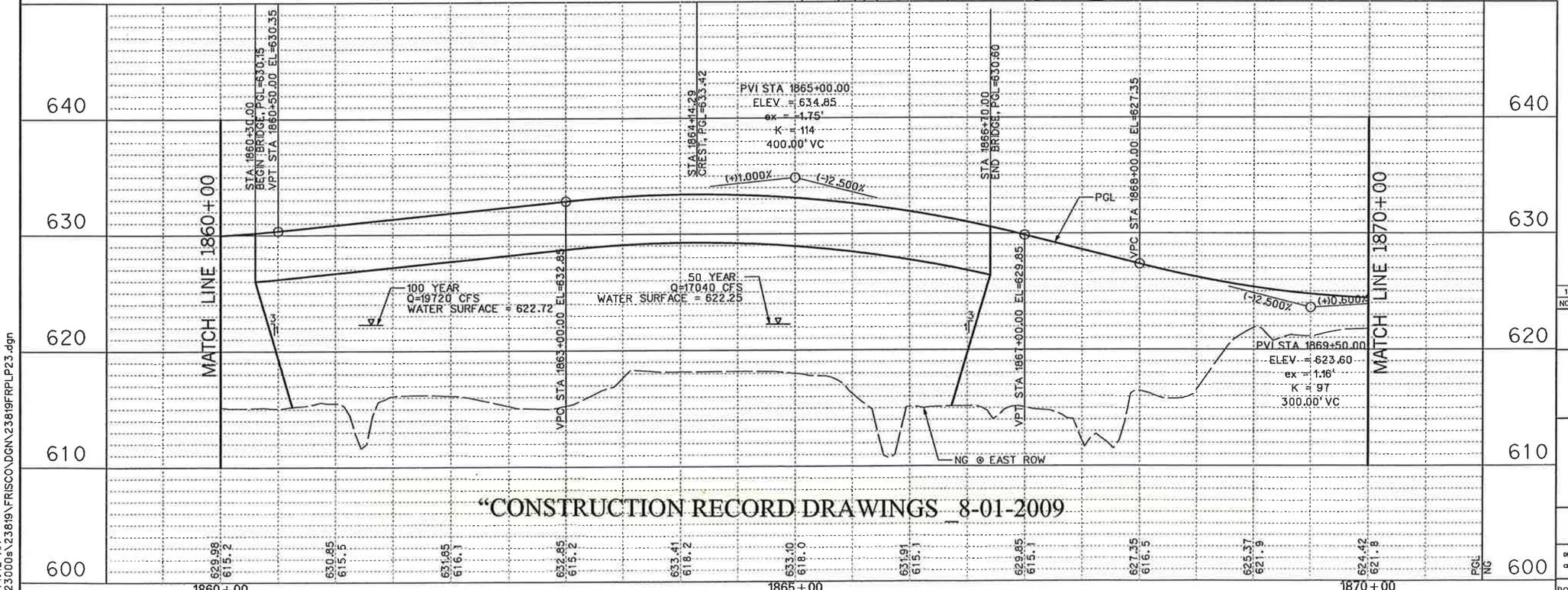

0 50 100 150 200
SCALE IN FEET

LEGEND

PGL	PROFILE GRADE LINE
⇨	EXISTING TRAFFIC LANE
➡	PROPOSED TRAFFIC LANE
⇨	FUTURE TRAFFIC LANE
#	SOIL BORING
CP#	CONTROL POINT / BENCHMARK

EXISTING UTILITIES

—TEL—	BURIED PHONE	FH	FIRE HYDRANT
—OHE—	OVHD. ELECTRIC	WM	WATER METER
⊗	POWER POLE	WV	WATER VALVE
→	GUY WIRE	WMH	WATER MANHOLE

NOTES:

1. EXISTING UTILITES SHOWN ARE APPROXIMATE. CONTRACTOR SHALL CONFIRM PRESENCE AND LOCATION OF ALL UTILITIES PRIOR TO WORK.

2. SEE GEOMETRIC LAYOUT & SURVEY CONTROL DATA FOR HORIZONTAL DATUM & BENCHMARK INFORMATION.

3. SEE DRAINAGE PLAN FOR CURB INLET LOCATIONS.

4. SEE TYPICAL SECTIONS FOR ROADWAY PAVING DETAILS.

STATE OF TEXAS
DENNIS D. SATRE
71590
REGISTERED PROFESSIONAL ENGINEER
6.6.08

NO.	DATE	REVISION	APPROV.
1	6/6/08	MBGF REVISIONS - C.O. #4	D. SATRE

DALLAS PARKWAY EXTENSION

COLLIN COUNTY

PAVING PLAN – PROFILE
EAST SERVICE ROAD
STA 1860+00 TO STA 1870+00

23

Halff Associates, Inc.
ENGINEERS · ARCHITECTS · SCIENTISTS · PLANNERS · SURVEYORS

DRAWN MDB DATE DEC 2006 | DESIGNED DDS DATE | CHECKED DDS DATE | SCALE 1"=100'(H), 1"=10'(V)

BOND PROJECT NO. 03-13 SHEET 78 OF 271

"CONSTRUCTION RECORD DRAWINGS 8-01-2009

6/6/2008 10:44:42 AM

10:44:42 AM
I:\23000s\23819\FRISCO\DGN\23819FRPLP23.dgn

P-200612-01

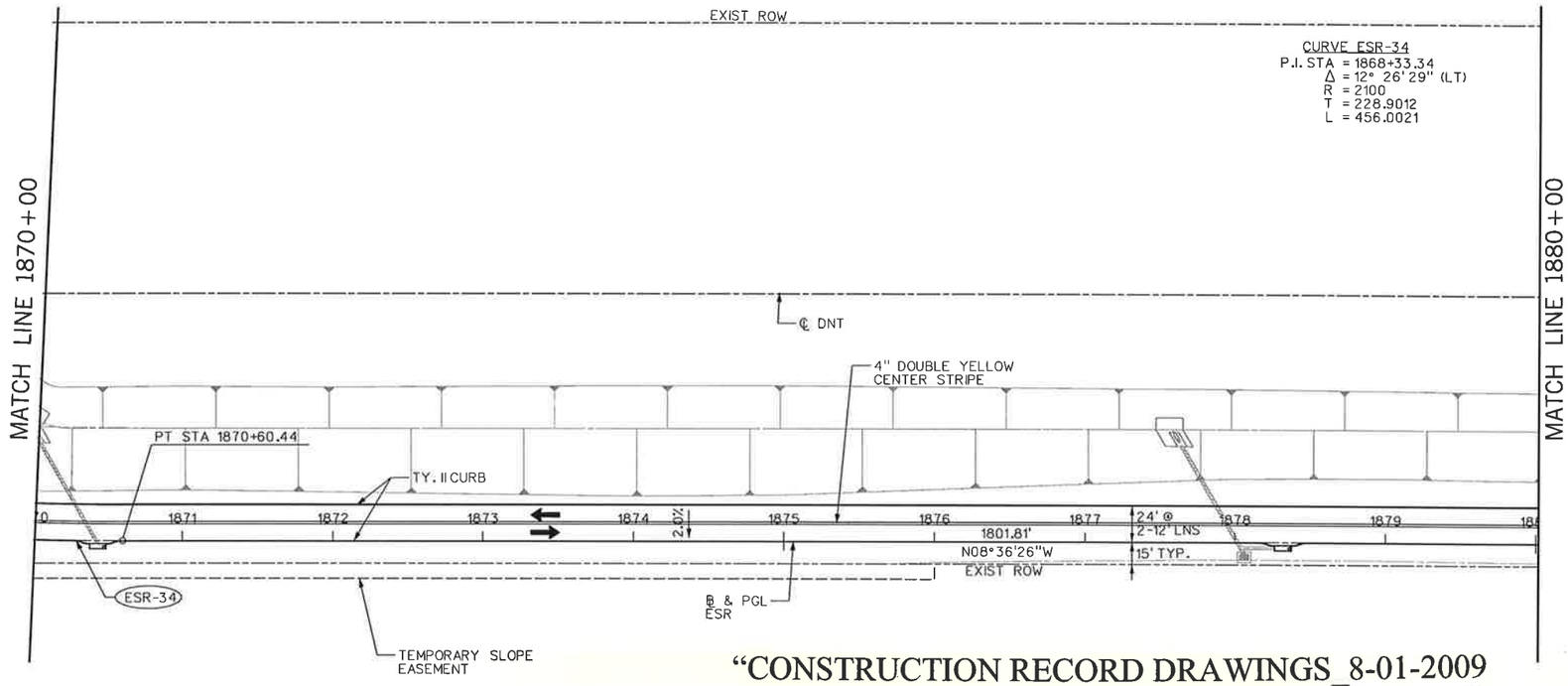

"CONSTRUCTION RECORD DRAWINGS_8-01-2009

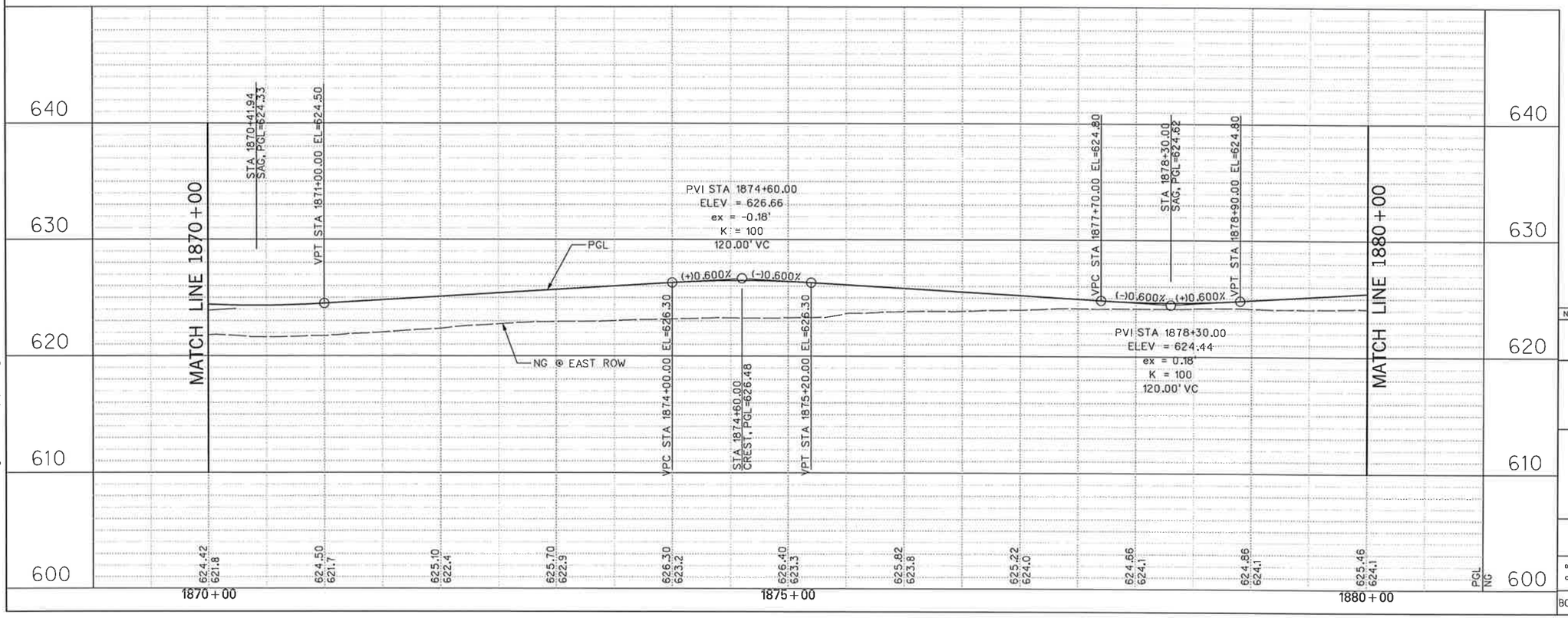

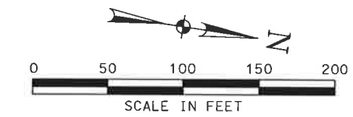

LEGEND

PGL	PROFILE GRADE LINE
⇨	EXISTING TRAFFIC LANE
➡	PROPOSED TRAFFIC LANE
⇢	FUTURE TRAFFIC LANE
#	SOIL BORING
CP#	CONTROL POINT / BENCHMARK

EXISTING UTILITIES

—TEL—	BURIED PHONE	FH	FIRE HYDRANT
—OHE—	OVHD. ELECTRIC	WM	WATER METER
⊗	POWER POLE	WV	WATER VALVE
—⊃	GUY WIRE	WMH	WATER MANHOLE

NOTES:

1. EXISTING UTILITES SHOWN ARE APPROXIMATE. CONTRACTOR SHALL CONFIRM PRESENCE AND LOCATION OF ALL UTILITIES PRIOR TO WORK.

2. SEE GEOMETRIC LAYOUT & SURVEY CONTROL DATA FOR HORIZONTAL DATUM & BENCHMARK INFORMATION.

3. SEE DRAINAGE PLAN FOR CURB INLET LOCATIONS.

4. SEE TYPICAL SECTIONS FOR ROADWAY PAVING DETAILS.

NO.	DATE	REVISION	APPROV.

DALLAS PARKWAY EXTENSION

COLLIN COUNTY, TEXAS

PAVING PLAN – PROFILE
EAST SERVICE ROAD
STA 1870+00 TO STA 1880+00

24

Halff Associates, Inc.
ENGINEERS · ARCHITECTS · SCIENTISTS · PLANNERS · SURVEYORS

DRAWN MDB DATE DEC 2006 DESIGNED DDS DATE
CHECKED DDS DATE SCALE 1"=100'(H), 1"=10'(V)

BOND PROJECT NO. 03-13 SHEET 79 OF 271

P-200612-01

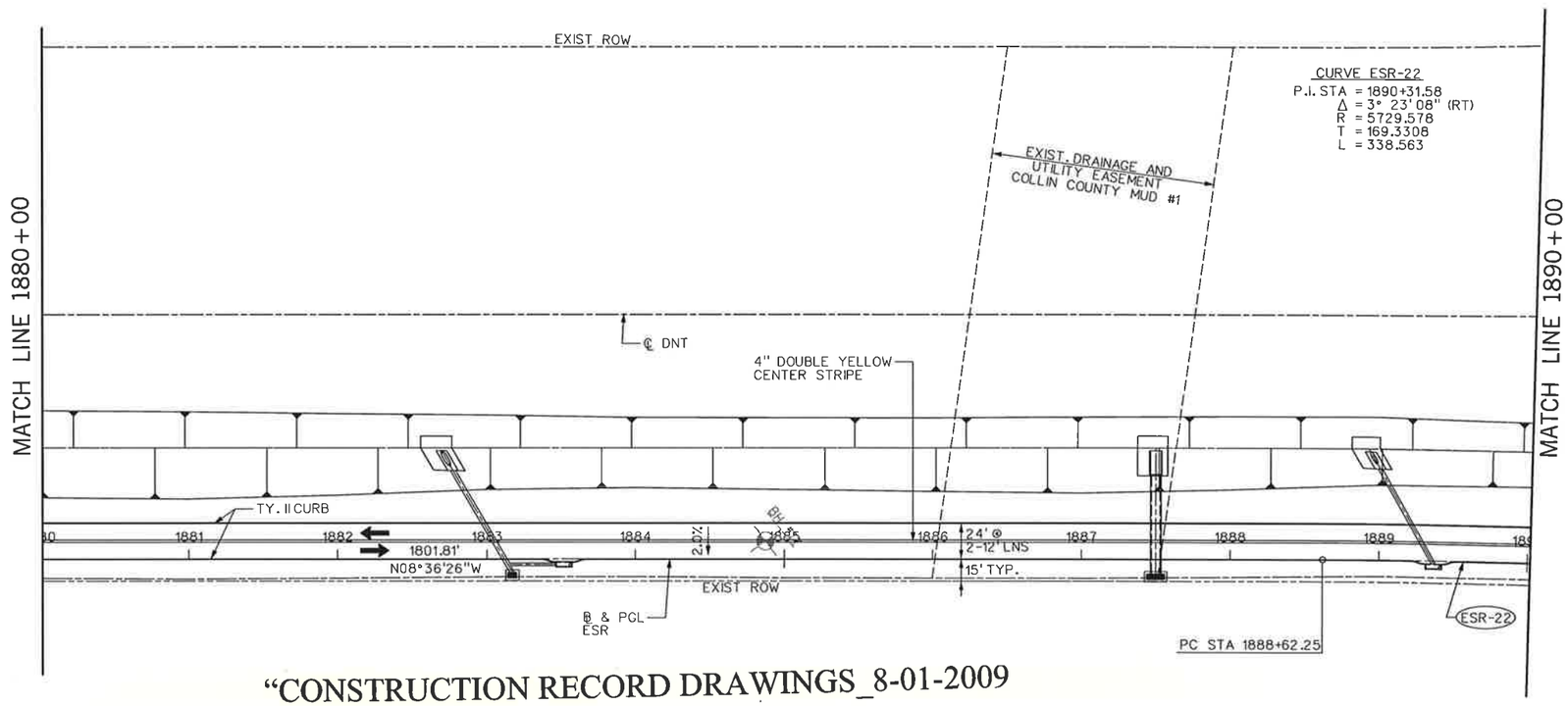

"CONSTRUCTION RECORD DRAWINGS_8-01-2009

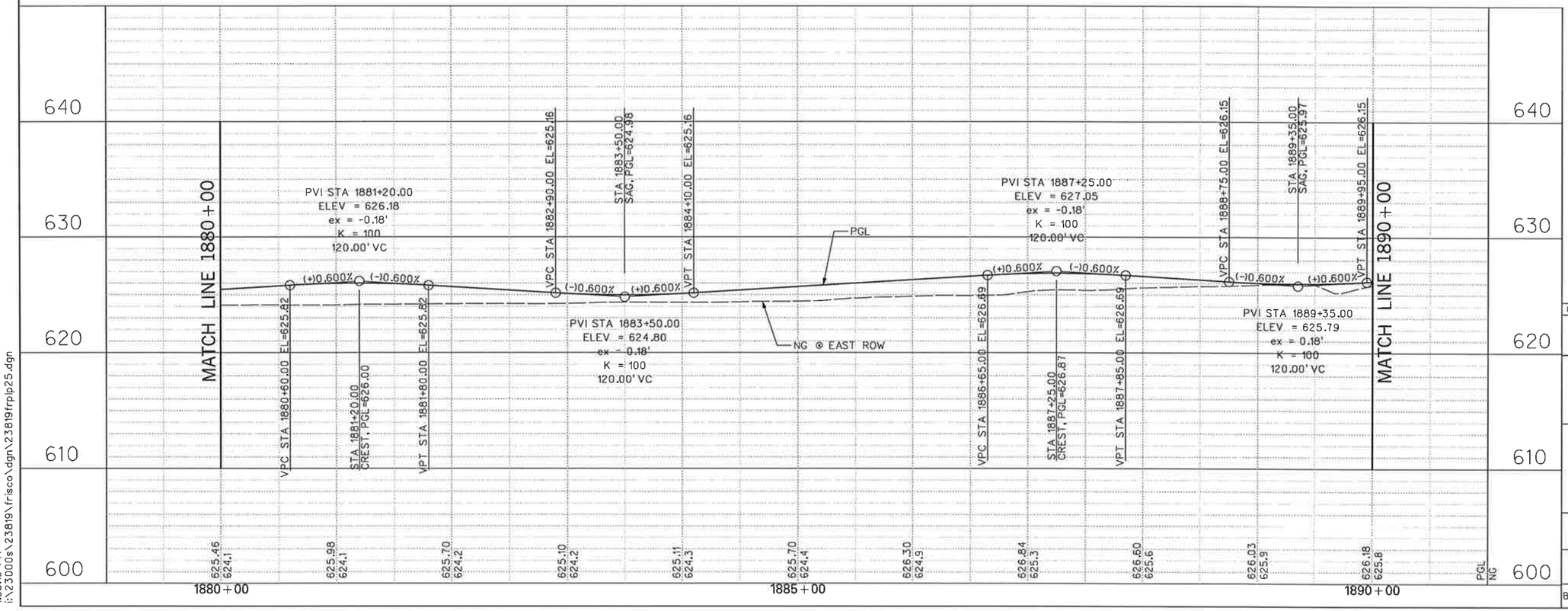

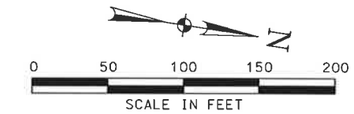

LEGEND

- PGL — PROFILE GRADE LINE
- EXISTING TRAFFIC LANE
- PROPOSED TRAFFIC LANE
- FUTURE TRAFFIC LANE
- # — SOIL BORING
- CP# — CONTROL POINT / BENCHMARK

EXISTING UTILITIES

- TEL — BURIED PHONE
- OHE — OVHD. ELECTRIC
- POWER POLE
- GUY WIRE
- FH — FIRE HYDRANT
- WM — WATER METER
- WV — WATER VALVE
- WMH — WATER MANHOLE

NOTES:

1. EXISTING UTILITES SHOWN ARE APPROXIMATE. CONTRACTOR SHALL CONFIRM PRESENCE AND LOCATION OF ALL UTILITIES PRIOR TO WORK.
2. SEE GEOMETRIC LAYOUT & SURVEY CONTROL DATA FOR HORIZONTAL DATUM & BENCHMARK INFORMATION.
3. SEE DRAINAGE PLAN FOR CURB INLET LOCATIONS.
4. SEE TYPICAL SECTIONS FOR ROADWAY PAVING DETAILS.

STATE OF TEXAS
DENNIS D. SATRE
71590
REGISTERED PROFESSIONAL ENGINEER
12/28/06

NO.	DATE	REVISION	APPROV.

DALLAS PARKWAY EXTENSION

COLLIN COUNTY

PAVING PLAN – PROFILE
EAST SERVICE ROAD
STA 1880+00 TO STA 1890+00

25

Halff Associates, Inc.
ENGINEERS · ARCHITECTS · SCIENTISTS · PLANNERS · SURVEYORS

DRAWN	MDB	DATE	DEC 2006	DESIGNED	DDS	DATE	
CHECKED	DDS	DATE		SCALE	1"=100'(H), 1"=10'(V)		

BOND PROJECT NO. 03-13 SHEET 80 OF 271

B-200612-01

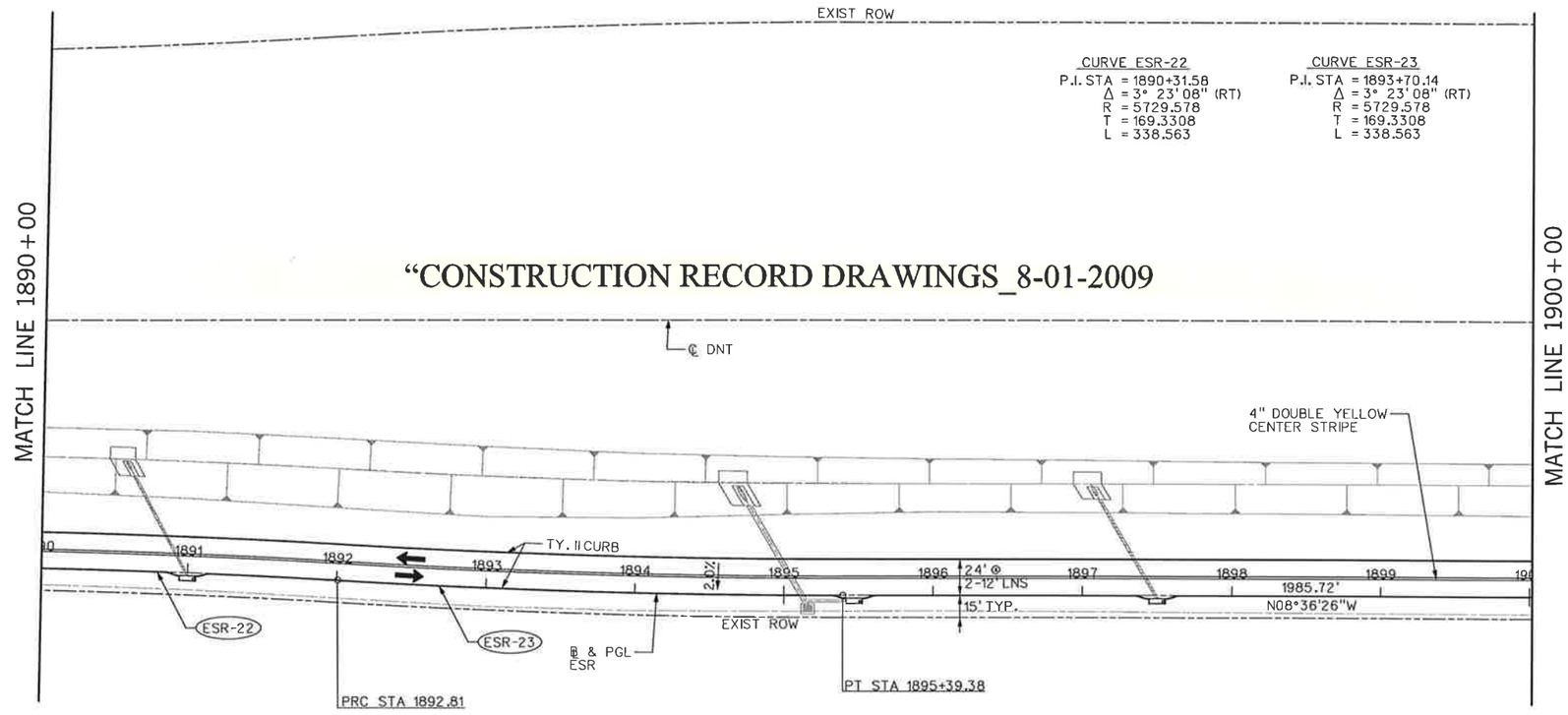

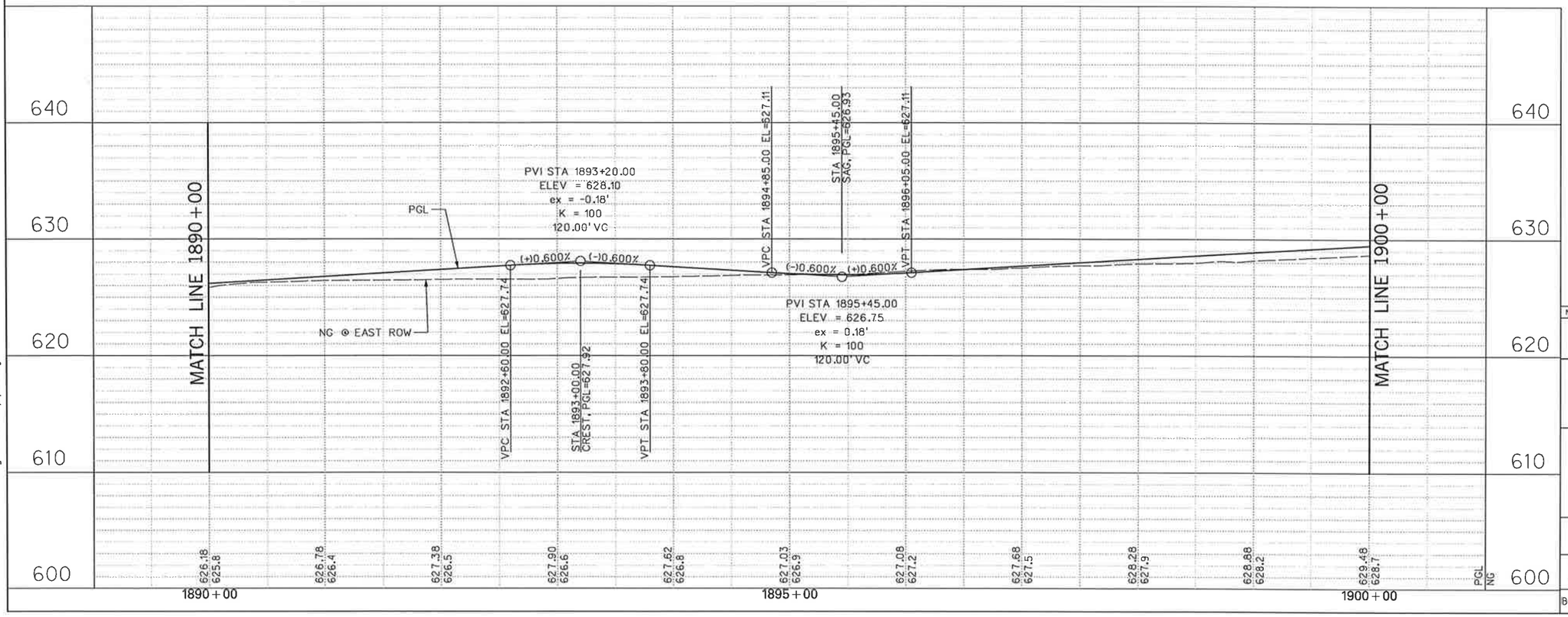

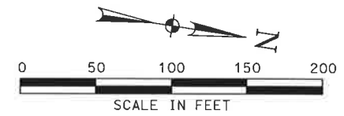

LEGEND

PGL	PROFILE GRADE LINE
⇨	EXISTING TRAFFIC LANE
➡	PROPOSED TRAFFIC LANE
⇢	FUTURE TRAFFIC LANE
#	SOIL BORING
CP#	CONTROL POINT / BENCHMARK

EXISTING UTILITIES

—TEL—	BURIED PHONE	FH	FIRE HYDRANT
—OHE—	OVHD. ELECTRIC	WM	WATER METER
⊗	POWER POLE	WV	WATER VALVE
—)	GUY WIRE	WMH	WATER MANHOLE

NOTES:

1. EXISTING UTILITES SHOWN ARE APPROXIMATE. CONTRACTOR SHALL CONFIRM PRESENCE AND LOCATION OF ALL UTILITIES PRIOR TO WORK.

2. SEE GEOMETRIC LAYOUT & SURVEY CONTROL DATA FOR HORIZONTAL DATUM & BENCHMARK INFORMATION.

3. SEE DRAINAGE PLAN FOR CURB INLET LOCATIONS.

4. SEE TYPICAL SECTIONS FOR ROADWAY PAVING DETAILS.

NO.	DATE	REVISION	APPROV.

DALLAS PARKWAY EXTENSION

COLLIN COUNTY

PAVING PLAN – PROFILE
EAST SERVICE ROAD
STA 1890+00 TO STA 1900+00

26

Halff Associates, Inc.
ENGINEERS · ARCHITECTS · SCIENTISTS · PLANNERS · SURVEYORS

DRAWN	MDB	DATE DEC 2006	DESIGNED DDS DATE
CHECKED	DDS	DATE	SCALE 1"=100'(H), 1"=10'(V)

BOND PROJECT NO. 03-13 SHEET 81 OF 271

P-200612-01

$$$$$$$$$$$$dgnspec$$$$$$$$$$$$$$$$

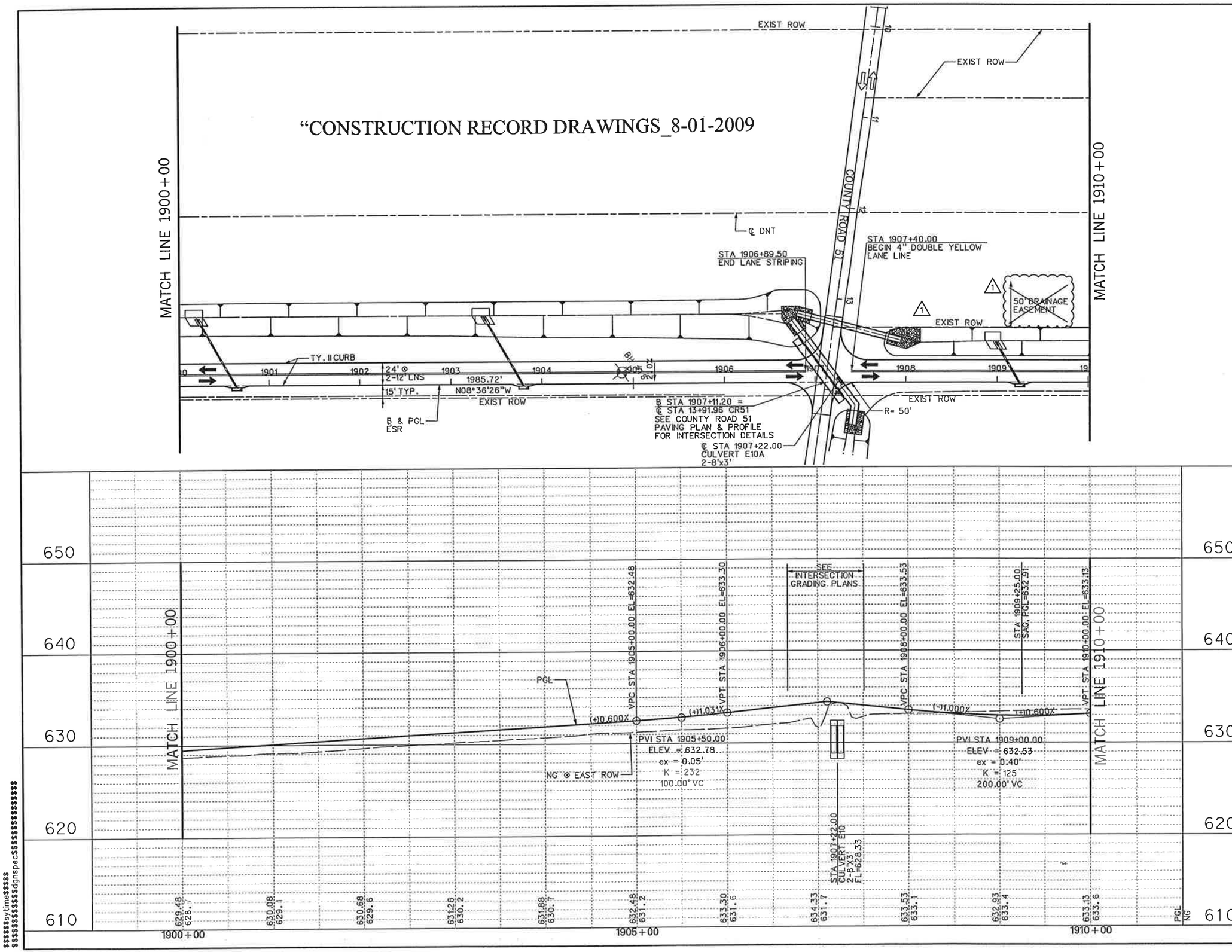

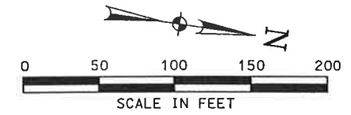

LEGEND

PGL	PROFILE GRADE LINE
	EXISTING TRAFFIC LANE
	PROPOSED TRAFFIC LANE
	FUTURE TRAFFIC LANE
#	SOIL BORING
CP#	CONTROL POINT / BENCHMARK

EXISTING UTILITIES

—TEL—	BURIED PHONE	FH	FIRE HYDRANT
—OHE—	OVHD. ELECTRIC	WM	WATER METER
	POWER POLE	WV	WATER VALVE
	GUY WIRE	WMH	WATER MANHOLE

NOTES:

1. EXISTING UTILITES SHOWN ARE APPROXIMATE. CONTRACTOR SHALL CONFIRM PRESENCE AND LOCATION OF ALL UTILITIES PRIOR TO WORK.

2. SEE GEOMETRIC LAYOUT & SURVEY CONTROL DATA FOR HORIZONTAL DATUM & BENCHMARK INFORMATION.

3. SEE DRAINAGE PLAN FOR CURB INLET LOCATIONS.

4. SEE TYPICAL SECTIONS FOR ROADWAY PAVING DETAILS.

STATE OF TEXAS
DENNIS D. SATRE
71590
REGISTERED PROFESSIONAL ENGINEER
9-27-07

NO.	DATE	REVISION	APPROV.
1	9/27/07	REVISED PAVING AND DITCH LIMITS - CO#2	D. SATRE

DALLAS PARKWAY EXTENSION

COLL IN COUNTY

PAVING PLAN – PROFILE
EAST SERVICE ROAD
STA 1900+00 TO STA 1910+00

27

Halff Associates, Inc.
ENGINEERS · ARCHITECTS · SCIENTISTS · PLANNERS · SURVEYORS

DRAWN MDB DATE DEC 2006 DESIGNED DDS DATE
CHECKED DDS DATE SCALE 1"=100'(H), 1"=10'(V)

BOND PROJECT NO. 03-13 SHEET 82 OF 271

P-200612-01

$$sydate$$ $$$$$$sytime$$$$$

$$$$$$$$$$$$$dgnspec$$$$$$$$$$$$$$$$

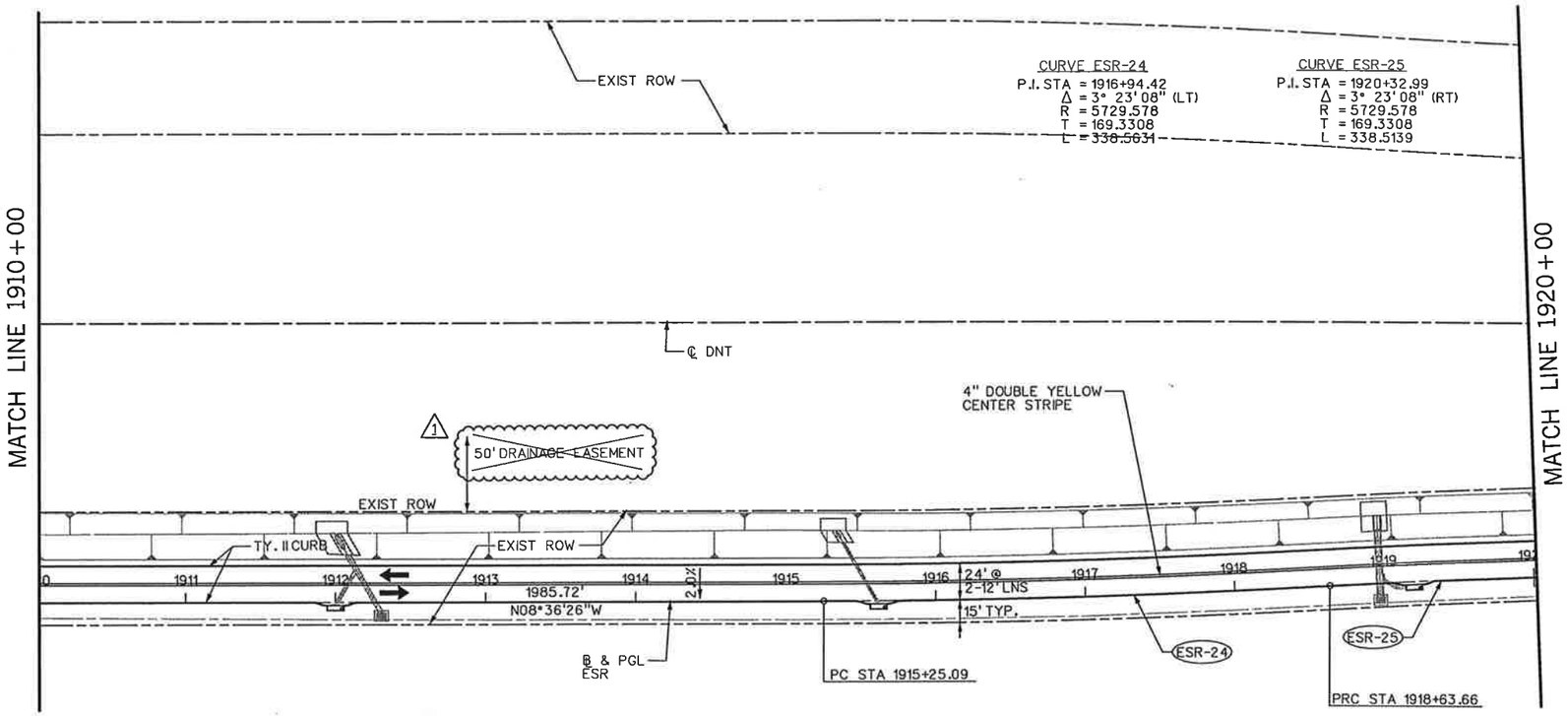

"CONSTRUCTION RECORD DRAWINGS_8-01-2009

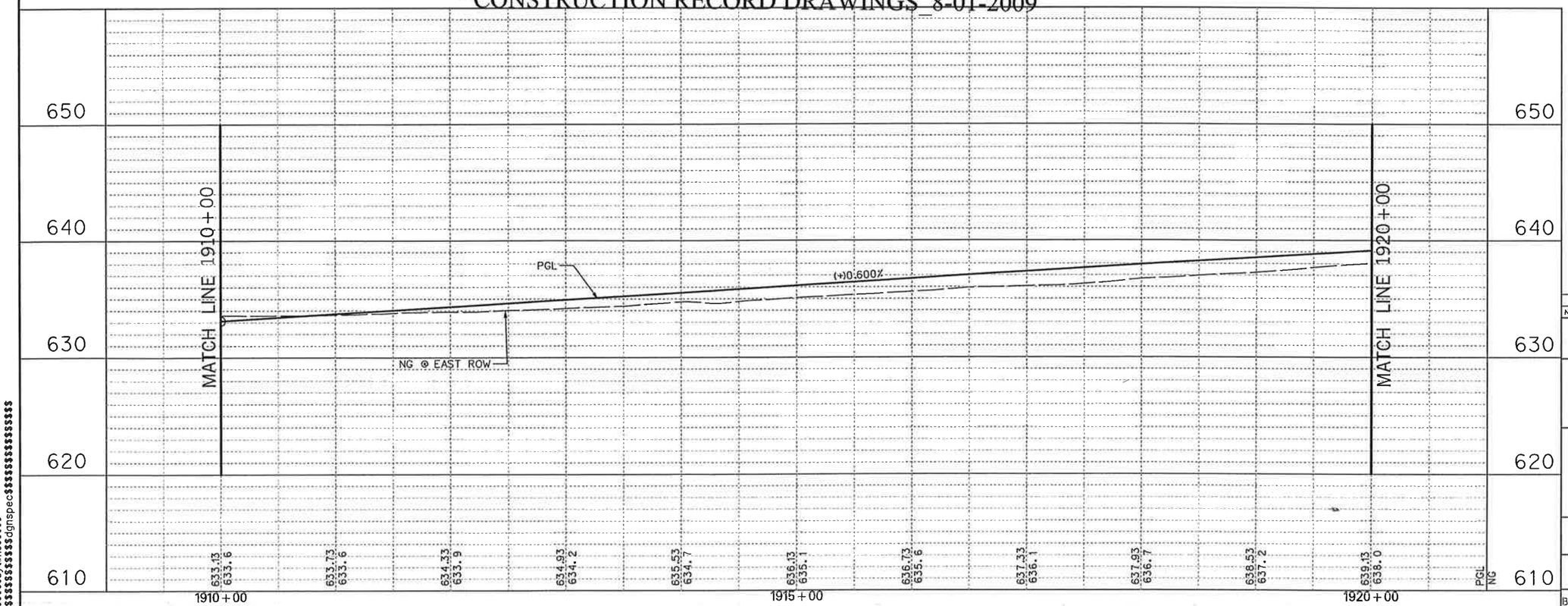

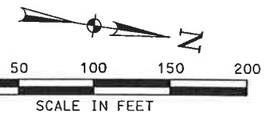

LEGEND

PGL	PROFILE GRADE LINE
⇨	EXISTING TRAFFIC LANE
➡	PROPOSED TRAFFIC LANE
⇨	FUTURE TRAFFIC LANE
#	SOIL BORING
CP#	CONTROL POINT / BENCHMARK

EXISTING UTILITIES

—TEL—	BURIED PHONE	FH	FIRE HYDRANT
—OHE—	OVHD. ELECTRIC	WM	WATER METER
⊗	POWER POLE	WV	WATER VALVE
—⊃	GUY WIRE	WMH	WATER MANHOLE

NOTES:

1. EXISTING UTILITES SHOWN ARE APPROXIMATE. CONTRACTOR SHALL CONFIRM PRESENCE AND LOCATION OF ALL UTILITIES PRIOR TO WORK.

2. SEE GEOMETRIC LAYOUT & SURVEY CONTROL DATA FOR HORIZONTAL DATUM & BENCHMARK INFORMATION.

3. SEE DRAINAGE PLAN FOR CURB INLET LOCATIONS.

4. SEE TYPICAL SECTIONS FOR ROADWAY PAVING DETAILS.

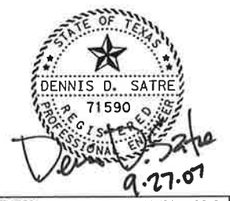

NO.	DATE	REVISION	APPROV.
1	9/27/07	REVISED PAVING AND DITCH LIMITS - CO#2	D. SATRE

DALLAS PARKWAY EXTENSION

COLL IN COUNTY

PAVING PLAN – PROFILE
EAST SERVICE ROAD
STA 1910+00 TO STA 1920+00

28

Halff Associates, Inc.
ENGINEERS · ARCHITECTS · SCIENTISTS · PLANNERS · SURVEYORS

DRAWN	MDB	DATE DEC 2006	DESIGNED DDS DATE
CHECKED	DDS	DATE	SCALE 1"=100'(H), 1"=10'(V)

BOND PROJECT NO. 03-13 SHEET 83 OF 271

P-200612-01

$$$$$$sytime$$$$$$
$$$$$$$$$$$$$$dgnspec$$$$$$$$$$$$$$$$$$
$$svdate$$ $$$$$$sytime$$$$$$

$$$$$$$$$$$$$dgnspec$$$$$$$$$$$$$$$$

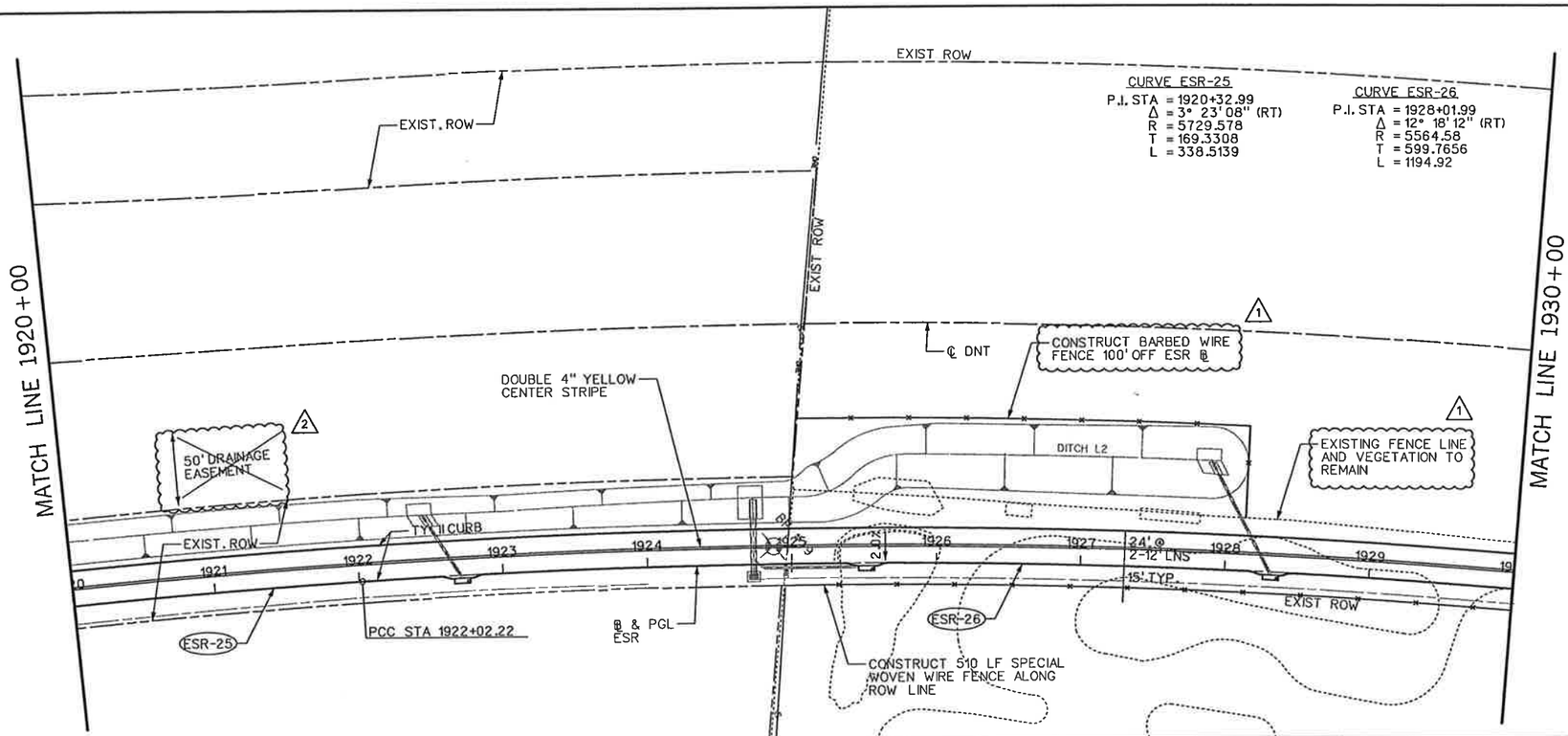

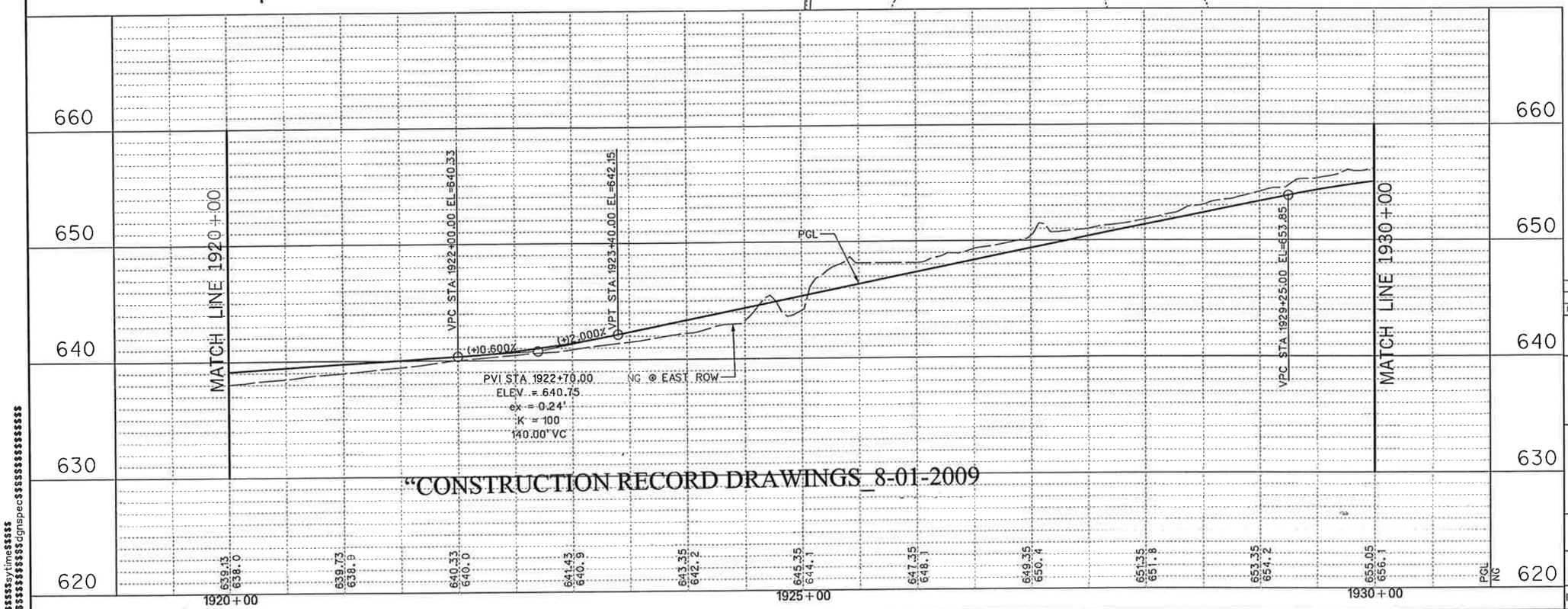

"CONSTRUCTION RECORD DRAWINGS_8-01-2009

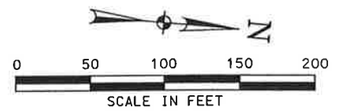

LEGEND

PGL	PROFILE GRADE LINE
⇨	EXISTING TRAFFIC LANE
➡	PROPOSED TRAFFIC LANE
⇨	FUTURE TRAFFIC LANE
#	SOIL BORING
CP#	CONTROL POINT / BENCHMARK

EXISTING UTILITIES

—TEL—	BURIED PHONE	FH	FIRE HYDRANT
—OHE—	OVHD. ELECTRIC	WM	WATER METER
⊗	POWER POLE	WV	WATER VALVE
⊸	GUY WIRE	WMH	WATER MANHOLE

DENNIS D. SATRE
71590
REGISTERED PROFESSIONAL ENGINEER
STATE OF TEXAS
9.27.07

NO.	DATE	REVISION	APPROV.
2	9/27/07	REVISED PAVING AND DITCH LIMITS- CO#2	D. SATRE
1	1/19/07	ADDENDUM #1	D. SATRE

DALLAS PARKWAY EXTENSION

COLLIN COUNTY

PAVING PLAN – PROFILE
EAST SERVICE ROAD
STA 1920+00 TO STA 1930+00

29

Halff Associates, Inc.
ENGINEERS · ARCHITECTS · SCIENTISTS · PLANNERS · SURVEYORS

DRAWN MDB DATE DEC 2006 DESIGNED DDS DATE
CHECKED DDS DATE SCALE 1"=100'(H), 1"=10'(V)

BOND PROJECT NO. 03-13 SHEET 84 OF 271

P-2006-12-01

$$$$$$sytime$$$$$$
$$$$$$$$$$$$dgnspec$$$$$$$$$$$$$$$$
$$sydate$$ $$$$$$sytime$$$$$$

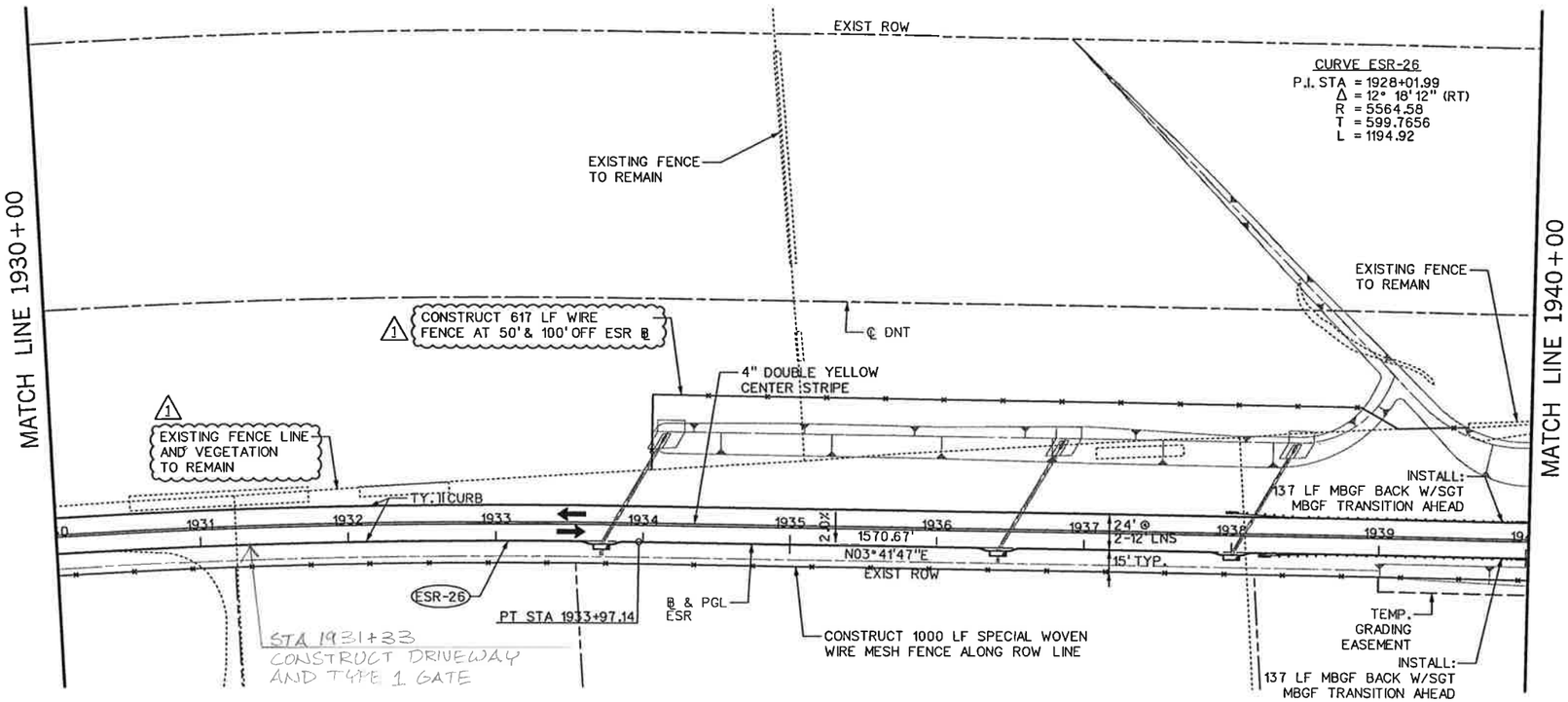

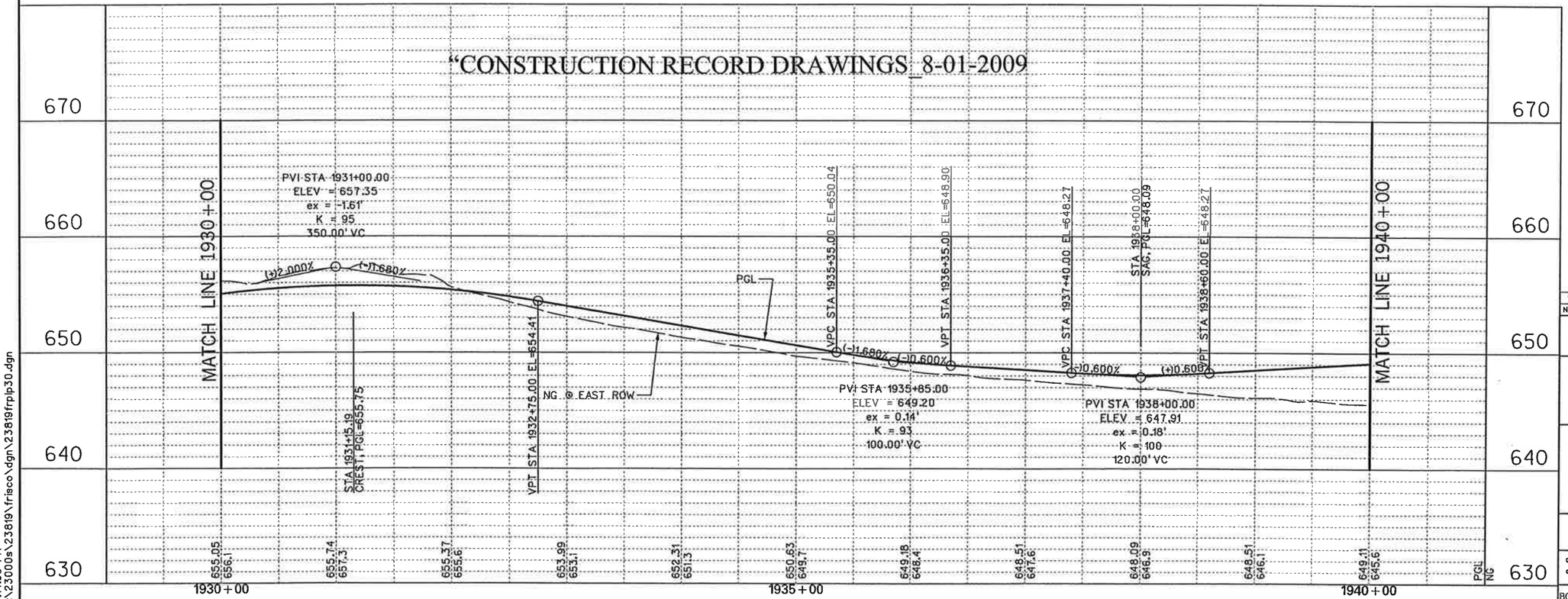

0 50 100 150 200
SCALE IN FEET

LEGEND

- PGL — PROFILE GRADE LINE
- EXISTING TRAFFIC LANE
- PROPOSED TRAFFIC LANE
- FUTURE TRAFFIC LANE
- # — SOIL BORING
- CP# — CONTROL POINT / BENCHMARK

EXISTING UTILITIES

- —TEL— BURIED PHONE
- —OHE— OVHD. ELECTRIC
- POWER POLE
- GUY WIRE
- FH — FIRE HYDRANT
- WM — WATER METER
- WV — WATER VALVE
- WMH — WATER MANHOLE

NOTES:

1. EXISTING UTILITES SHOWN ARE APPROXIMATE. CONTRACTOR SHALL CONFIRM PRESENCE AND LOCATION OF ALL UTILITIES PRIOR TO WORK.
2. SEE GEOMETRIC LAYOUT & SURVEY CONTROL DATA FOR HORIZONTAL DATUM & BENCHMARK INFORMATION.
3. SEE DRAINAGE PLAN FOR CURB INLET LOCATIONS.
4. SEE TYPICAL SECTIONS FOR ROADWAY PAVING DETAILS.

STATE OF TEXAS
DENNIS D. SATRE
71590
REGISTERED PROFESSIONAL ENGINEER
1-19-07

NO.	DATE	REVISION	APPROV.
1	1/19/07	ADDENDUM #1	D. SATRE

DALLAS PARKWAY EXTENSION

COLLIN COUNTY

PAVING PLAN – PROFILE
EAST SERVICE ROAD
STA 1930+00 TO STA 1940+00

30

Halff Associates, Inc.
ENGINEERS · ARCHITECTS · SCIENTISTS · PLANNERS · SURVEYORS

DRAWN MDB DATE DEC 2006 | DESIGNED DDS DATE
CHECKED DDS DATE | SCALE 1"=100'(H), 1"=10'(V)

BOND PROJECT NO. 03-13 SHEET 85 OF 271

P-200612-01

4:14:30 PM
i:\23000s\23819\frisco\dgn\23819frplp30.dgn

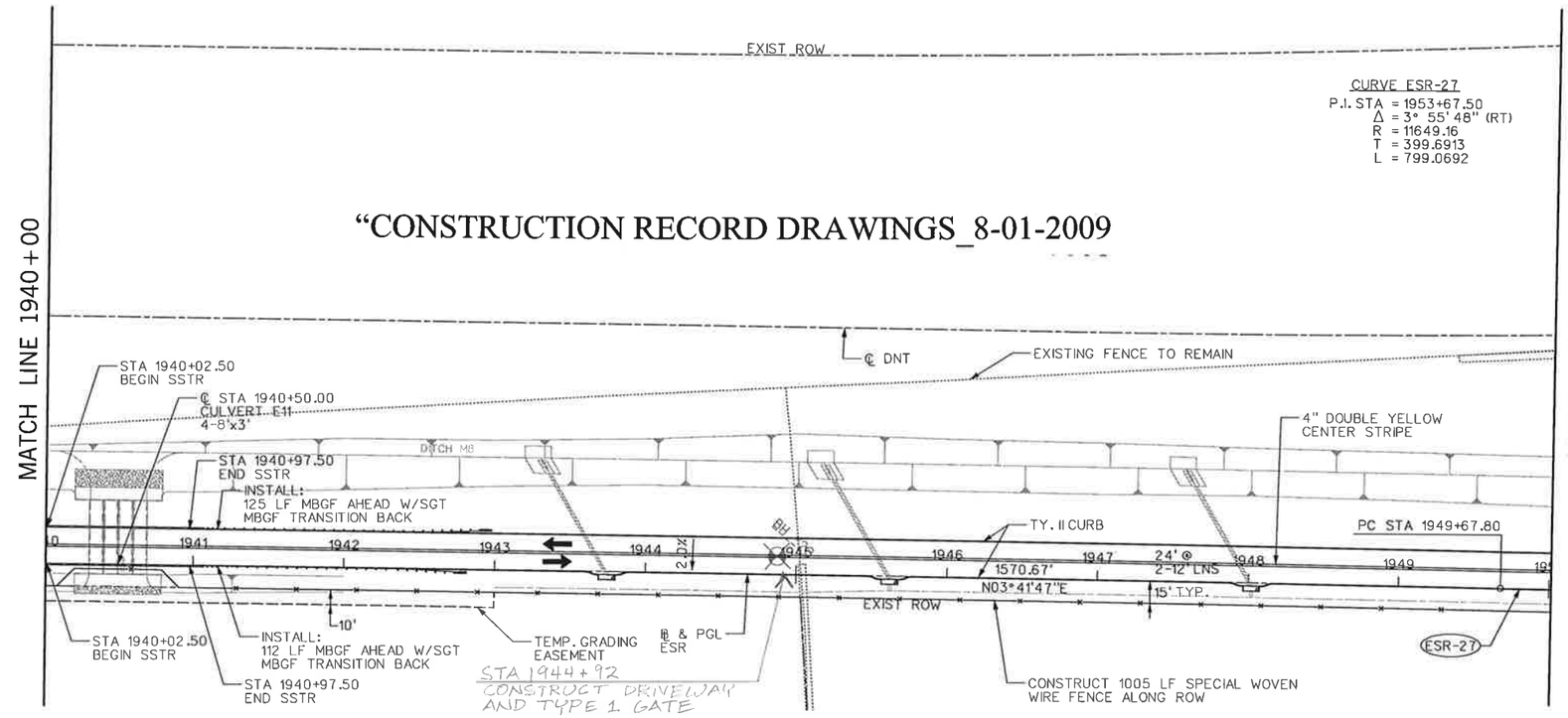

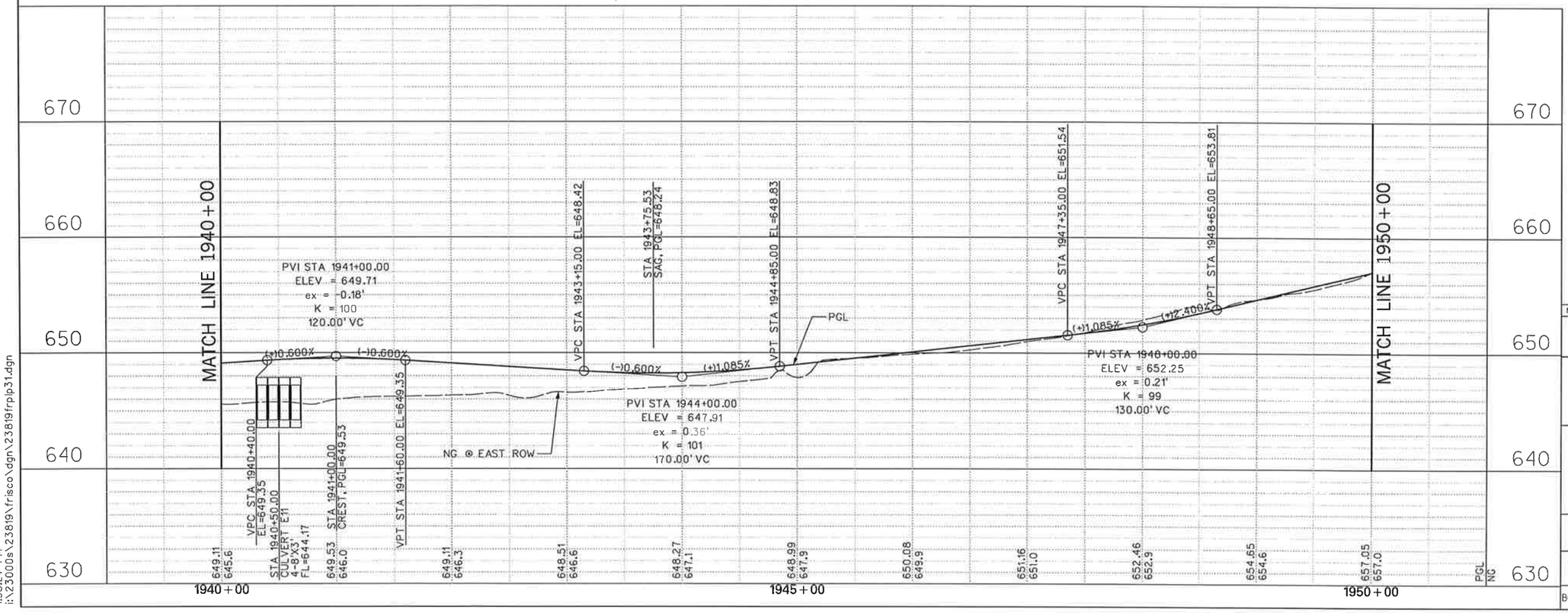

0 50 100 150 200
SCALE IN FEET

LEGEND

- PGL — PROFILE GRADE LINE
- EXISTING TRAFFIC LANE
- PROPOSED TRAFFIC LANE
- FUTURE TRAFFIC LANE
- SOIL BORING #
- CONTROL POINT / BENCHMARK CP#

EXISTING UTILITIES

- —TEL— BURIED PHONE
- —OHE— OVHD. ELECTRIC
- POWER POLE
- GUY WIRE
- FH FIRE HYDRANT
- WM WATER METER
- WV WATER VALVE
- WMH WATER MANHOLE

NOTES:

1. EXISTING UTILITES SHOWN ARE APPROXIMATE. CONTRACTOR SHALL CONFIRM PRESENCE AND LOCATION OF ALL UTILITIES PRIOR TO WORK.
2. SEE GEOMETRIC LAYOUT & SURVEY CONTROL DATA FOR HORIZONTAL DATUM & BENCHMARK INFORMATION.
3. SEE DRAINAGE PLAN FOR CURB INLET LOCATIONS.
4. SEE TYPICAL SECTIONS FOR ROADWAY PAVING DETAILS.

STATE OF TEXAS
DENNIS D. SATRE
71590
REGISTERED
PROFESSIONAL
ENGINEER
12/28/06

NO.	DATE	REVISION	APPROV.

DALLAS PARKWAY EXTENSION

COLLIN COUNTY

PAVING PLAN – PROFILE
EAST SERVICE ROAD
STA 1940+00 TO STA 1950+00

31

Halff Associates, Inc.
ENGINEERS · ARCHITECTS · SCIENTISTS · PLANNERS · SURVEYORS

DRAWN	MDB	DATE DEC 2006	DESIGNED DDS DATE
CHECKED	DDS	DATE	SCALE 1"=100'(H), 1"=10'(V)

BOND PROJECT NO. 03-13 SHEET 86 OF 271

P-200612-01

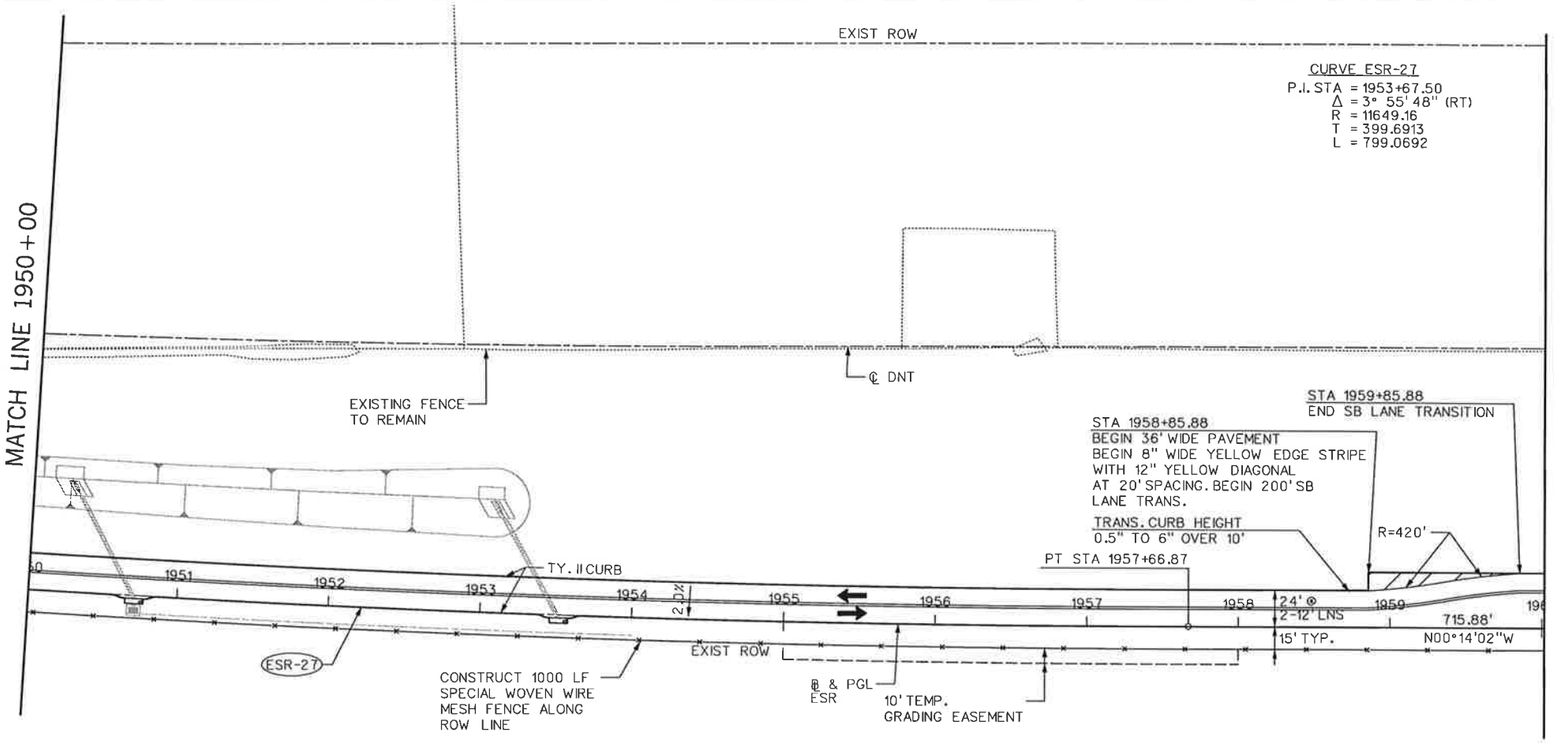

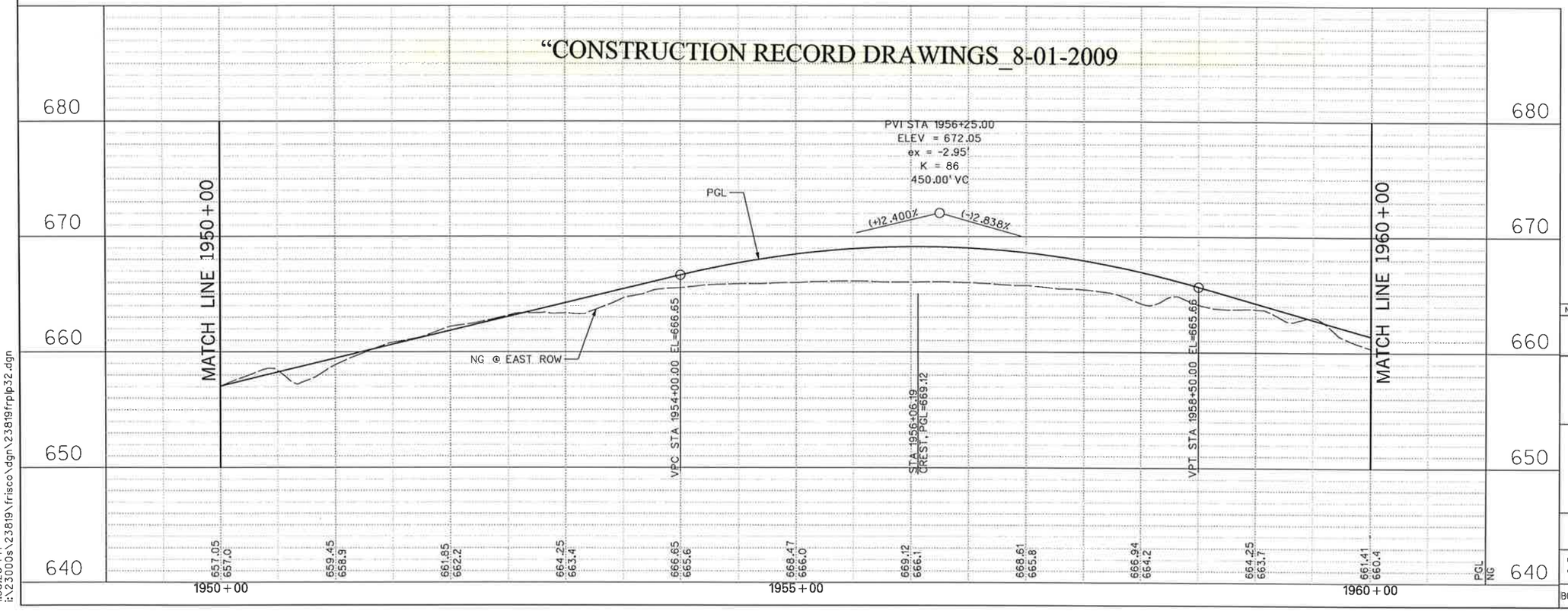

0 50 100 150 200
SCALE IN FEET

LEGEND

- PGL. PROFILE GRADE LINE
- EXISTING TRAFFIC LANE
- PROPOSED TRAFFIC LANE
- FUTURE TRAFFIC LANE
- # SOIL BORING
- CP# CONTROL POINT / BENCHMARK

EXISTING UTILITIES

- TEL BURIED PHONE
- OHE OVHD. ELECTRIC
- POWER POLE
- GUY WIRE
- FH FIRE HYDRANT
- WM WATER METER
- WV WATER VALVE
- WMH WATER MANHOLE

NOTES:

1. EXISTING UTILITES SHOWN ARE APPROXIMATE. CONTRACTOR SHALL CONFIRM PRESENCE AND LOCATION OF ALL UTILITIES PRIOR TO WORK.

2. SEE GEOMETRIC LAYOUT & SURVEY CONTROL DATA FOR HORIZONTAL DATUM & BENCHMARK INFORMATION.

3. SEE DRAINAGE PLAN FOR CURB INLET LOCATIONS.

4. SEE TYPICAL SECTIONS FOR ROADWAY PAVING DETAILS.

STATE OF TEXAS
DENNIS D. SATRE
71590
REGISTERED PROFESSIONAL ENGINEER
12/28/06

NO.	DATE	REVISION	APPROV.

DALLAS PARKWAY EXTENSION

COLLIN COUNTY

PAVING PLAN – PROFILE
EAST SERVICE ROAD
STA 1950+00 TO STA 1960+00

32

Halff Associates, Inc.
ENGINEERS · ARCHITECTS · SCIENTISTS · PLANNERS · SURVEYORS

DRAWN MDB	DATE DEC 2006	DESIGNED DDS	DATE
CHECKED DDS	DATE	SCALE 1"=100'(H), 1"=10'(V)	

BOND PROJECT NO. 03-13 SHEET 87 OF 271

P-200612-01

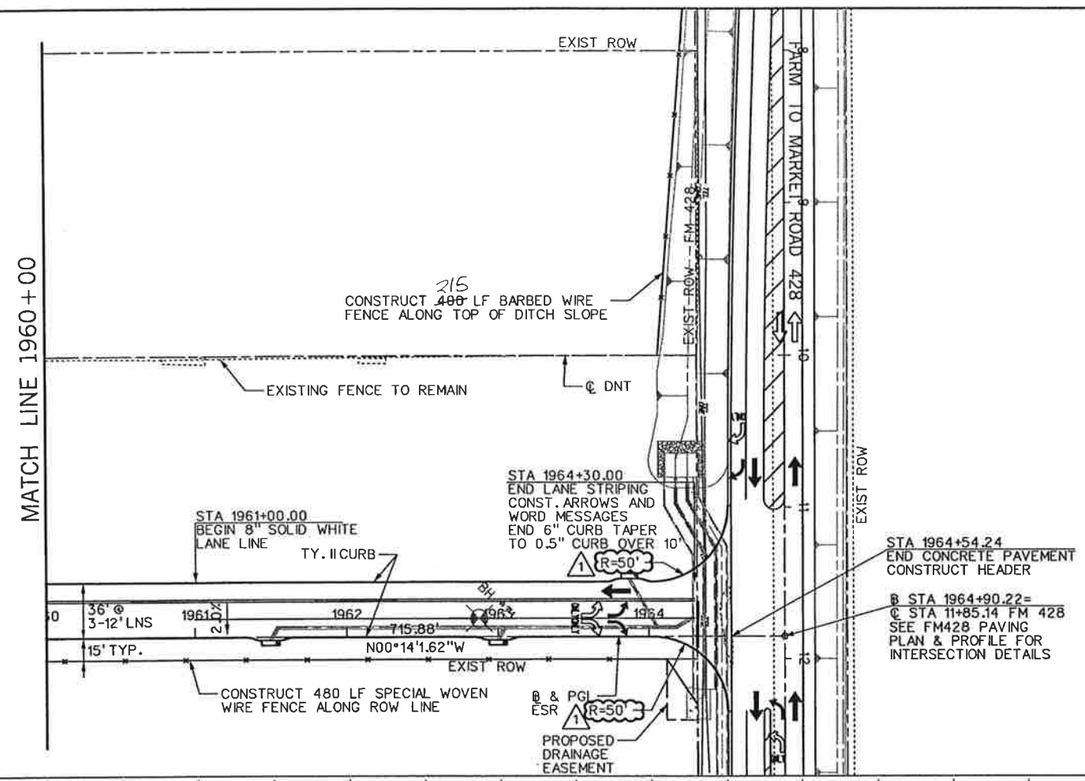

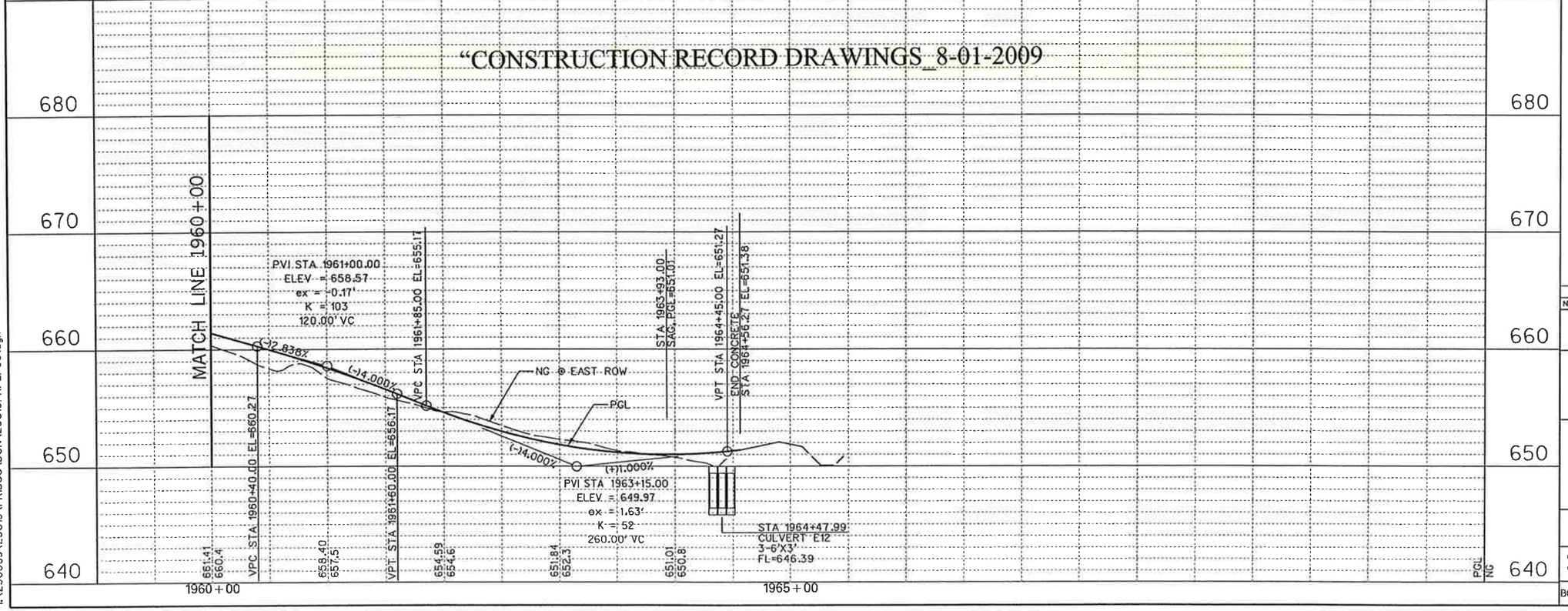

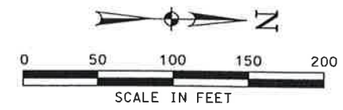

LEGEND

PGL	PROFILE GRADE LINE
⇨	EXISTING TRAFFIC LANE
➡	PROPOSED TRAFFIC LANE
⇨	FUTURE TRAFFIC LANE
#	SOIL BORING
CP#	CONTROL POINT / BENCHMARK

EXISTING UTILITIES

—TEL—	BURIED PHONE	FH	FIRE HYDRANT
—OHE—	OVHD. ELECTRIC	WM	WATER METER
⊗	POWER POLE	WV	WATER VALVE
—⊃	GUY WIRE	WMH	WATER MANHOLE

NOTES:

1. EXISTING UTILITES SHOWN ARE APPROXIMATE. CONTRACTOR SHALL CONFIRM PRESENCE AND LOCATION OF ALL UTILITIES PRIOR TO WORK.

2. SEE GEOMETRIC LAYOUT & SURVEY CONTROL DATA FOR HORIZONTAL DATUM & BENCHMARK INFORMATION.

3. SEE DRAINAGE PLAN FOR CURB INLET LOCATIONS.

4. SEE TYPICAL SECTIONS FOR ROADWAY PAVING DETAILS.

STATE OF TEXAS
DENNIS D. SATRE
71590
REGISTERED PROFESSIONAL ENGINEER
3-30-07

NO.	DATE	REVISION	APPROV.
1	3/30/07	TxDOT DRIVEWAY PERMIT - C.O. #1	D. SATRE

DALLAS PARKWAY EXTENSION

COLLIN COUNTY

PAVING PLAN – PROFILE
EAST SERVICE ROAD
STA 1960+00 TO END

33

Halff Associates, Inc.
ENGINEERS · ARCHITECTS · SCIENTISTS · PLANNERS · SURVEYORS

DRAWN	MDB	DATE DEC 2006	DESIGNED DDS DATE
CHECKED	DDS	DATE	SCALE 1"=100'(H), 1"=10'(V)

BOND PROJECT NO. 03-13 SHEET 88 OF 271

1:50:12 PM i:\23000s\23819\FRISCO\DGN\23819FRPLP33.dgn

5/24/2007 1:50:12 PM

P-200612-01

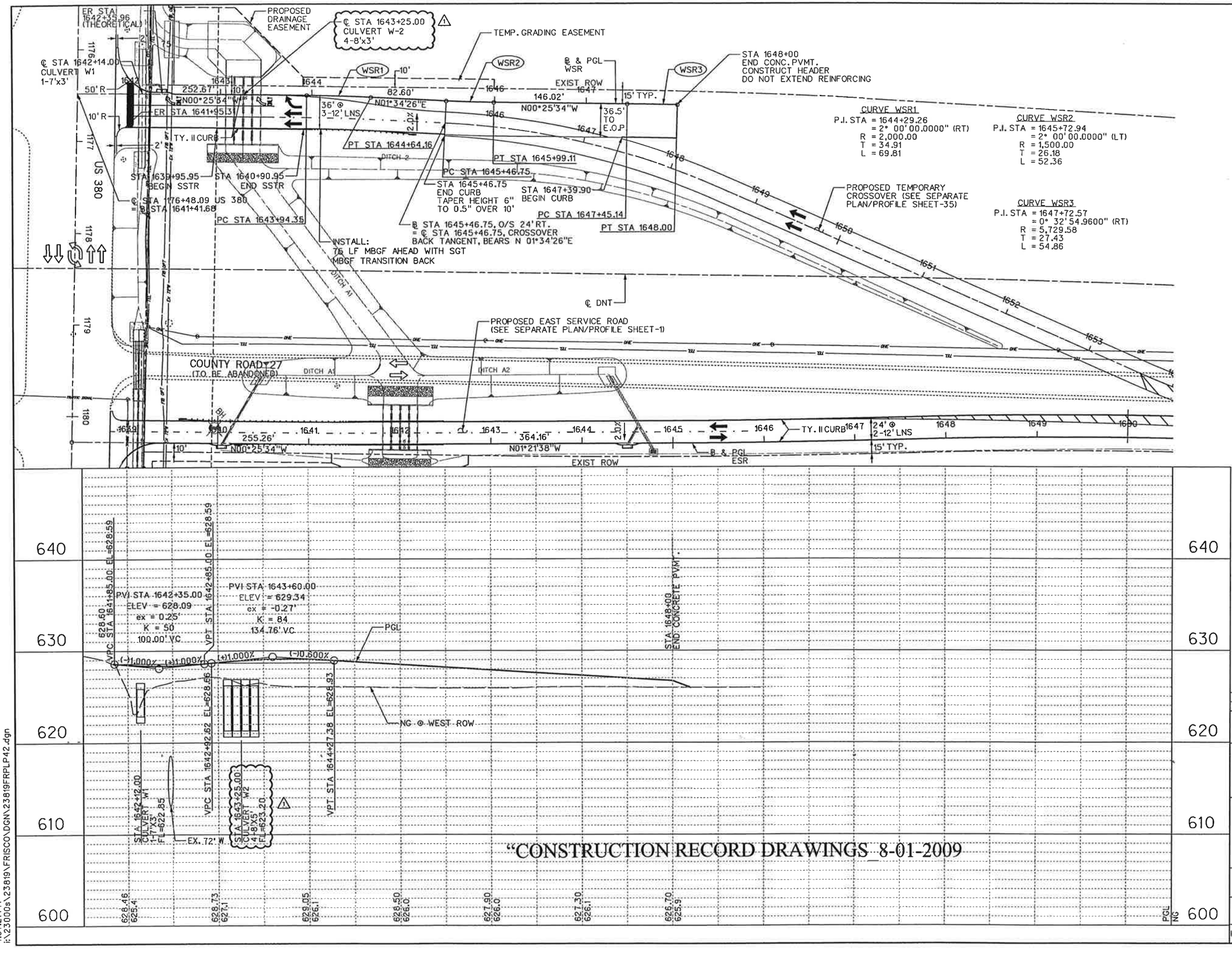

0 50 100 150 200 SCALE IN FEET

N

LEGEND

PGL	PROFILE GRADE LINE
⇨	EXISTING TRAFFIC LANE
➡	PROPOSED TRAFFIC LANE
⇨	FUTURE TRAFFIC LANE
#	SOIL BORING
CP#	CONTROL POINT / BENCHMARK

EXISTING UTILITIES

—TEL—	BURIED PHONE	FH	FIRE HYDRANT
—OHE—	OVHD. ELECTRIC	WM	WATER METER
⊗	POWER POLE	WV	WATER VALVE
→	GUY WIRE	WMH	WATER MANHOLE

NOTES:

1. EXISTING UTILITES SHOWN ARE APPROXIMATE. CONTRACTOR SHALL CONFIRM PRESENCE AND LOCATION OF ALL UTILITIES PRIOR TO WORK.

2. SEE GEOMETRIC LAYOUT & SURVEY CONTROL DATA FOR HORIZONTAL DATUM & BENCHMARK INFORMATION.

3. SEE DRAINAGE PLAN FOR CURB INLET LOCATIONS.

4. SEE TYPICAL SECTIONS FOR ROADWAY PAVING DETAILS.

STATE OF TEXAS
DENNIS D. SATRE
71590
REGISTERED PROFESSIONAL ENGINEER
6-01-07

NO.	DATE	REVISION	APPROV.
1	6/1/07	CULVERT E2 & W2 REVISION - C.O. #1	D. SATRE

DALLAS PARKWAY EXTENSION

COLLIN COUNTY

PAVING PLAN – PROFILE
WEST SERVICE ROAD

34

Halff Associates, Inc.
ENGINEERS · ARCHITECTS · SCIENTISTS · PLANNERS · SURVEYORS

DRAWN MDB DATE DEC 2006
CHECKED DDS DATE
DESIGNED DDS DATE
SCALE 1"=100'(H), 1"=10'(V)

BOND PROJECT NO. 03-13 SHEET 89 OF 271

"CONSTRUCTION RECORD DRAWINGS 8-01-2009

4:57:21 PM
i:\23000s\23819\FRISCO\DGN\23819FRPLP42.dgn

6/1/2007 4:57:21 PM
P-200612-01

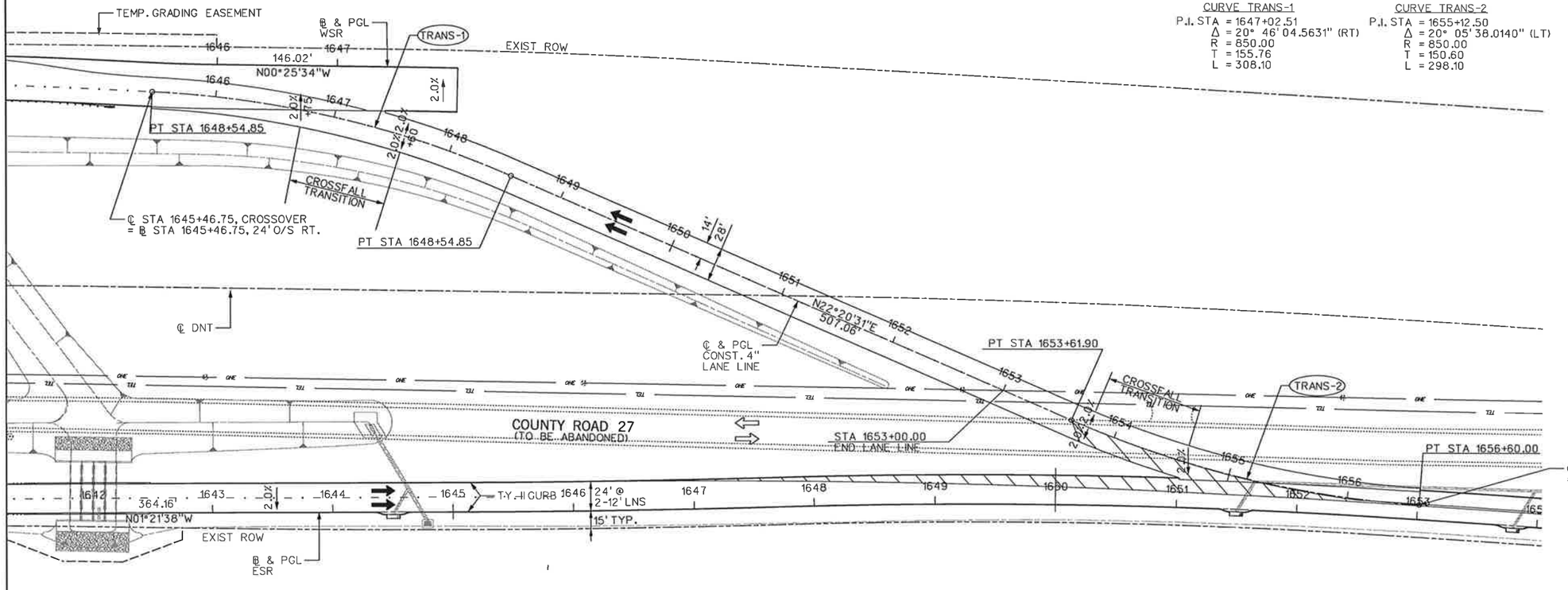

CURVE TRANS-1
P.I. STA = 1647+02.51
Δ = 20° 46' 04.5631" (RT)
R = 850.00
T = 155.76
L = 308.10

CURVE TRANS-2
P.I. STA = 1655+12.50
Δ = 20° 05' 38.0140" (LT)
R = 850.00
T = 150.60
L = 298.10

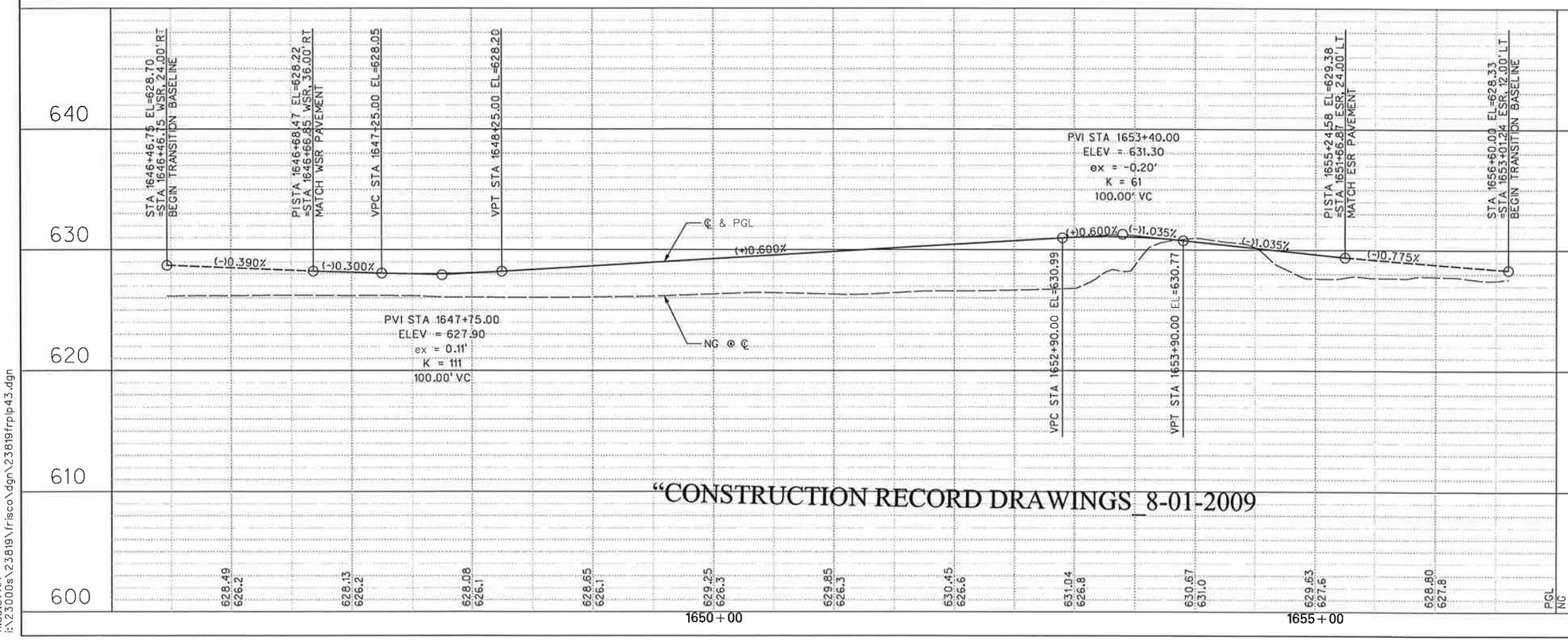

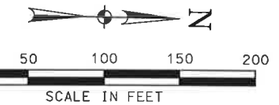

LEGEND

- PGL — PROFILE GRADE LINE
- EXISTING TRAFFIC LANE
- PROPOSED TRAFFIC LANE
- FUTURE TRAFFIC LANE
- SOIL BORING #
- CONTROL POINT / BENCHMARK CP#

EXISTING UTILITIES

- —TEL— BURIED PHONE
- —OHE— OVHD. ELECTRIC
- POWER POLE
- GUY WIRE
- FH FIRE HYDRANT
- WM WATER METER
- WV WATER VALVE
- WMH WATER MANHOLE

NOTES:

1. EXISTING UTILITES SHOWN ARE APPROXIMATE. CONTRACTOR SHALL CONFIRM PRESENCE AND LOCATION OF ALL UTILITIES PRIOR TO WORK.
2. SEE GEOMETRIC LAYOUT & SURVEY CONTROL DATA FOR HORIZONTAL DATUM & BENCHMARK INFORMATION.
3. SEE DRAINAGE PLAN FOR CURB INLET LOCATIONS.
4. SEE TYPICAL SECTIONS FOR ROADWAY PAVING DETAILS.

STATE OF TEXAS
DENNIS D. SATRE
71590
REGISTERED PROFESSIONAL ENGINEER
12/20/06

NO.	DATE	REVISION	APPROV.

DALLAS PARKWAY EXTENSION

COLLIN COUNTY

PAVING PLAN – PROFILE
TEMPORARY CROSSOVER

35

Halff Associates, Inc.
ENGINEERS · ARCHITECTS · SCIENTISTS · PLANNERS · SURVEYORS

DRAWN MDB	DATE DEC 2006	DESIGNED DDS	DATE
CHECKED DDS	DATE	SCALE 1"=100'(H), 1"=10'(V)	

BOND PROJECT NO. 03-13 SHEET 90 OF 271

"CONSTRUCTION RECORD DRAWINGS_8-01-2009

P-200612-01

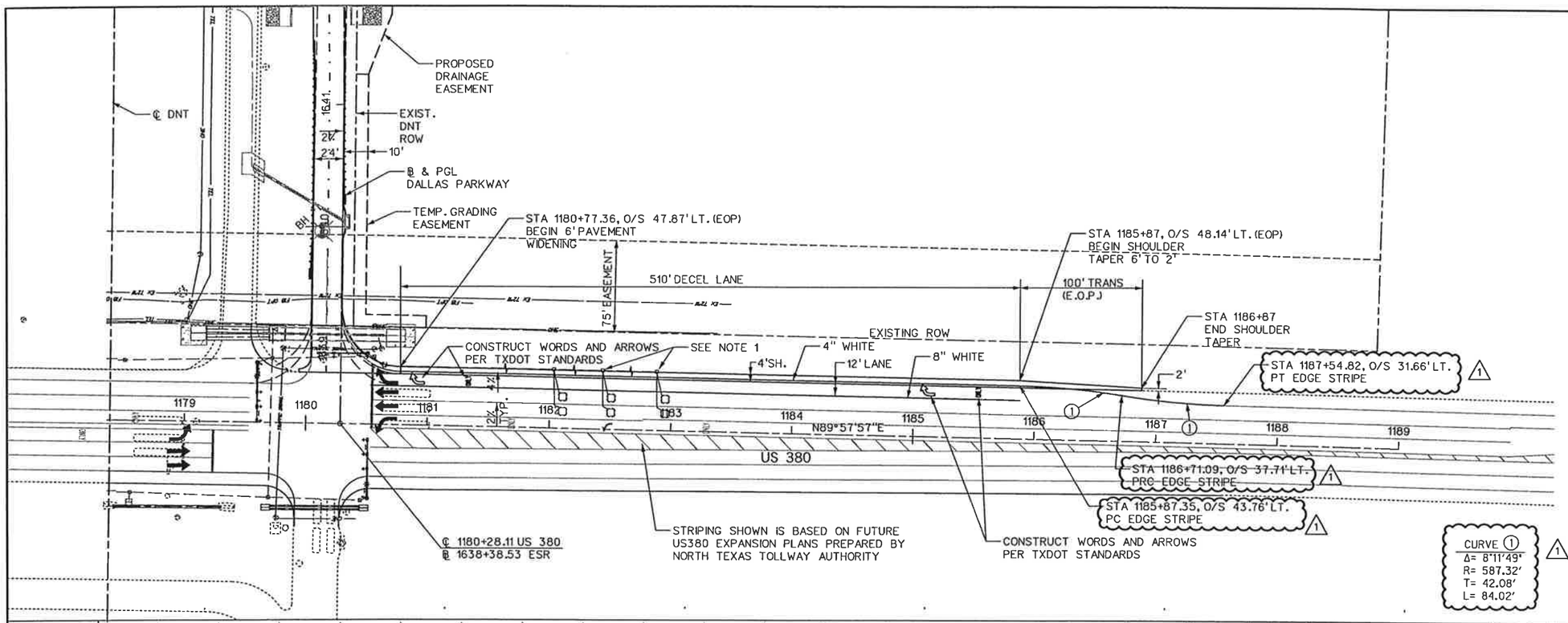

"CONSTRUCTION RECORD DRAWINGS _8-01-2009

N

0 50 100 150 200
SCALE IN FEET

LEGEND

- PGL — PROFILE GRADE LINE
- EXISTING TRAFFIC LANE
- PROPOSED TRAFFIC LANE
- FUTURE TRAFFIC LANE
- # — SOIL BORING
- CP# — CONTROL POINT / BENCHMARK

EXISTING UTILITIES

- —TEL— BURIED PHONE
- —OHE— OVHD. ELECTRIC
- POWER POLE
- GUY WIRE
- FH — FIRE HYDRANT
- WM — WATER METER
- WV — WATER VALVE
- WMH — WATER MANHOLE

NOTES:

1. CONTRACTOR SHALL COORDINATE REPLACEMENT OF LOOP WIRES WITH ONGOING SIGNAL CONSTRUCTION PERFORMED BY NTTA.
2. EXISTING UTILITES SHOWN ARE APPROXIMATE. CONTRACTOR SHALL CONFIRM PRESENCE AND LOCATION OF ALL UTILITIES PRIOR TO WORK.
3. SEE GEOMETRIC LAYOUT & SURVEY CONTROL DATA FOR HORIZONTAL DATUM & BENCHMARK INFORMATION.
4. SEE DRAINAGE PLAN FOR CURB INLET LOCATIONS.
5. SEE TYPICAL SECTIONS FOR ROADWAY PAVING DETAILS.
6. ALL PAVEMENT MARKINGS TO BE IN ACCORDANCE TXDOT STANDARD DRAWING LAYOUT. ALL STRIPE MARKINGS SHALL BE TYPE I. WORDS AND ARROWS SHALL BE TYPE I.

STATE OF TEXAS
DENNIS D. SATRE
71590
REGISTERED PROFESSIONAL ENGINEER
5-10-07

NO.	DATE	REVISION	APPROV.
1	05/10/07	TxDOT DRIVEWAY PERMIT - C.O. #1	D.SATRE

DALLAS PARKWAY EXTENSION

COLLIN COUNTY

PAVING PLAN -- PROFILE
US380 DECEL LANE

Halff Associates, Inc.
ENGINEERS · ARCHITECTS · SCIENTISTS · PLANNERS · SURVEYORS

DRAWN MDB DATE DEC 2006 DESIGNED DDS DATE
CHECKED DDS DATE SCALE

BOND PROJECT NO. 03-13 SHEET 91 OF 271

8:35:49 AM
i:\23000s\23819\FRISCO\DGN\23819FRPLP00.dgn

5/10/2007 8:35:49 AM

P-200612-01

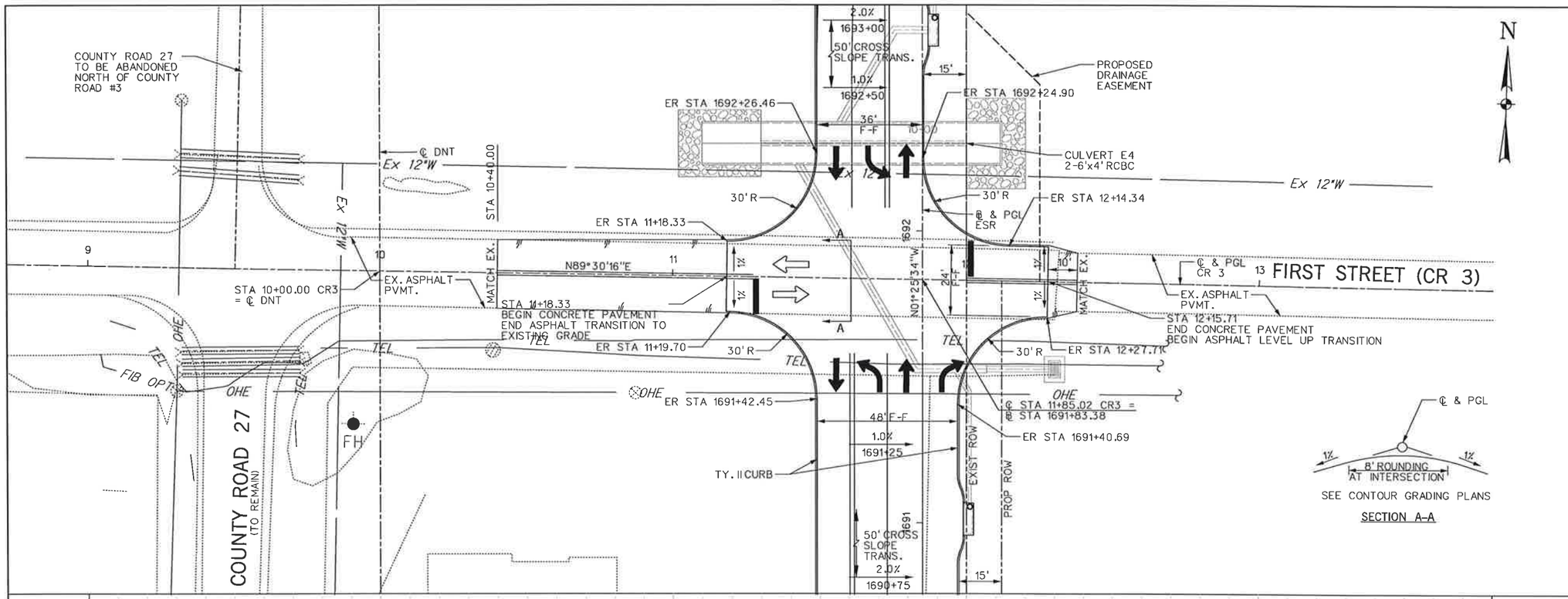

NOTES:

1. SEE ESR PLAN AND PROFILE FOR ADDITIONAL INFORMATION
2. SEE GRADING PLANS FOR PAVEMENT CONTOUR INFORMATION
3. CONCRETE PAVING FOR CROSS STREET TO MATCH SERVICE ROAD CONSTRUCTION
4. TAPER ALL CURB ENDS 0.5" TO 6" OVER 5'.

"CONSTRUCTION RECORD DRAWINGS_8-01-2009

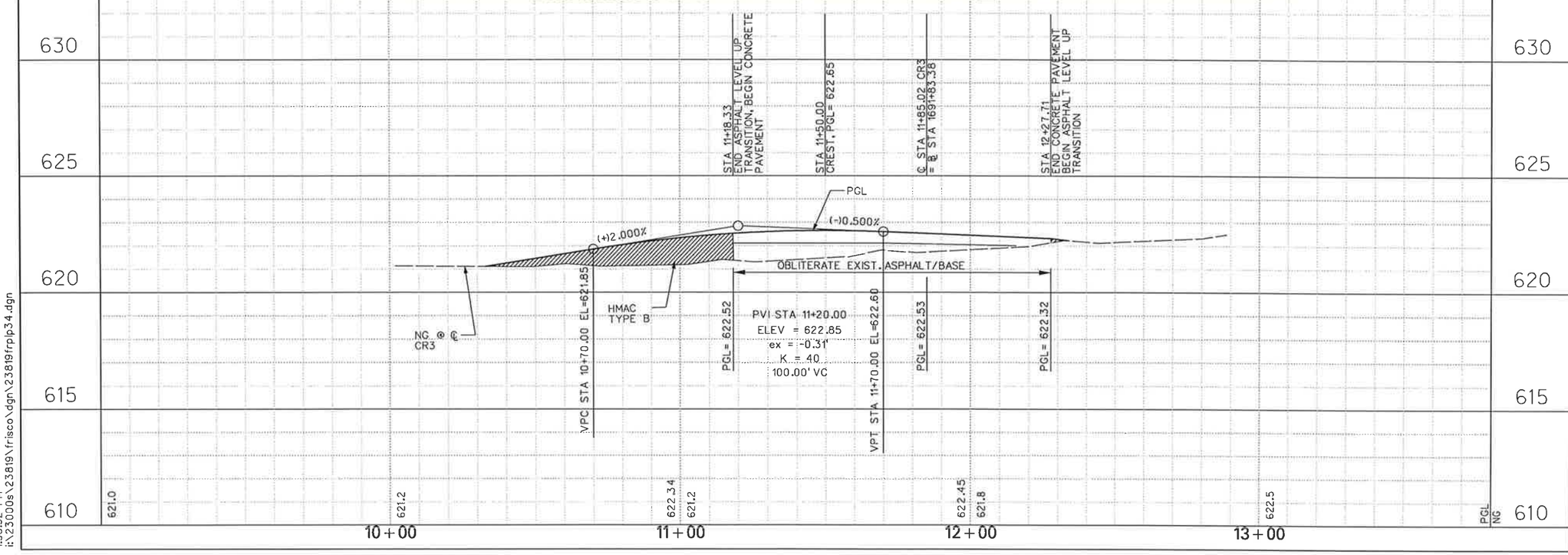

"CONSTRUCTION RECORD DRAWINGS_8-01-2009

STATE OF TEXAS
DENNIS D. SATRE
71590
REGISTERED PROFESSIONAL ENGINEER
12/28/06

NO.	DATE	REVISION	APPROV.

DALLAS PARKWAY EXTENSION

COLLIN COUNTY

PAVING PLAN – PROFILE
COUNTY ROAD 3

Halff Associates, Inc.
ENGINEERS · ARCHITECTS · SCIENTISTS · PLANNERS · SURVEYORS

DRAWN MDB DATE DEC 2006 DESIGNED DDS DATE
CHECKED DDS DATE SCALE 1"=40'(H), 1"=5'(V)

BOND PROJECT NO. 03-13 SHEET 42 OF 271

B200612-01

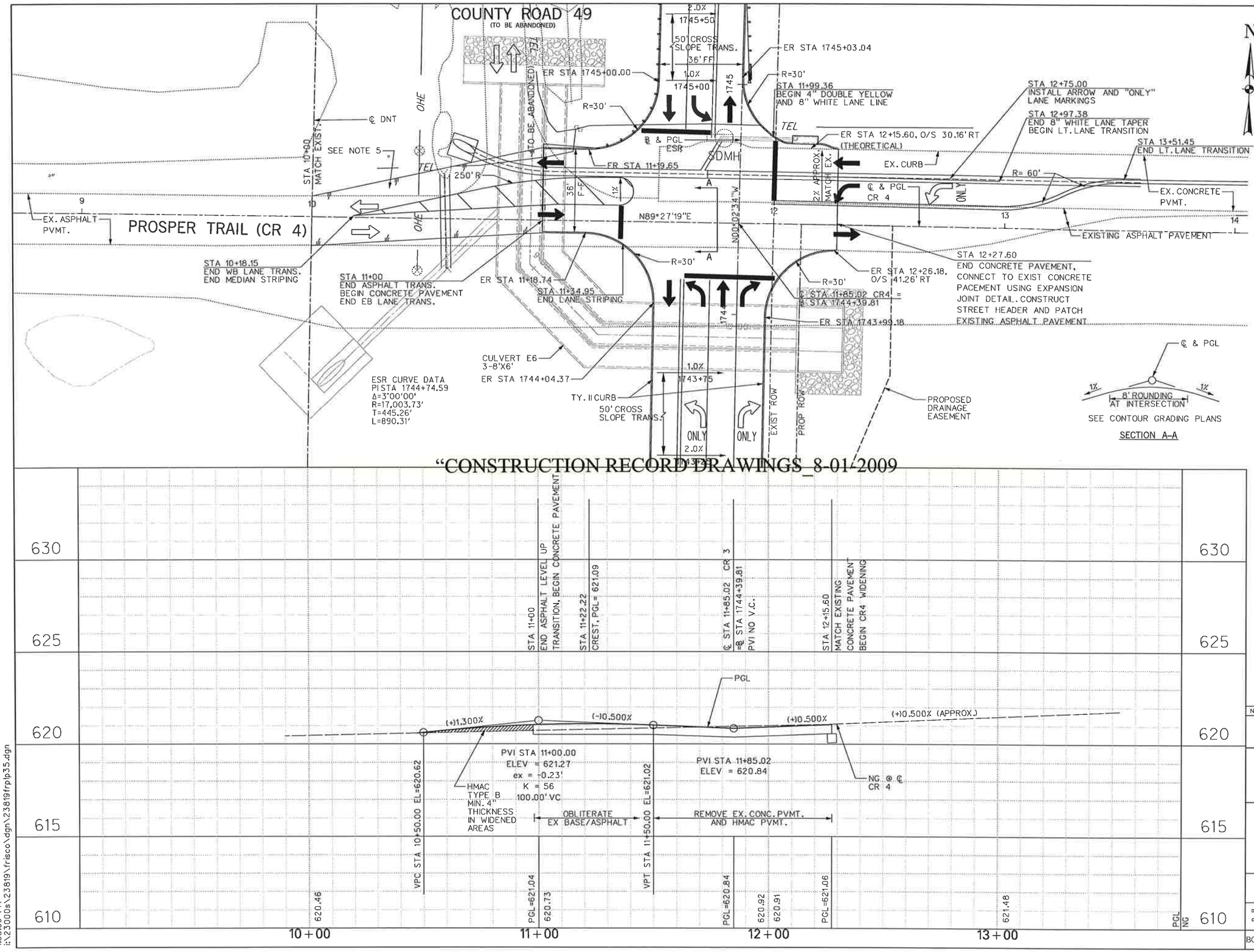

"CONSTRUCTION RECORD DRAWINGS_8-01-2009

LEGEND

PGL	PROFILE GRADE LINE
⇨	EXISTING TRAFFIC LANE
➡	PROPOSED TRAFFIC LANE
⇢	FUTURE TRAFFIC LANE
#, CP#	SOIL BORING / CONTROL POINT / BENCHMARK

EXISTING UTILITIES

—TEL—	BURIED PHONE	FH	FIRE HYDRANT
—OHE—	OVHD. ELECTRIC	WM	WATER METER
⊗	POWER POLE	WV	WATER VALVE
—)	GUY WIRE	WMH	WATER MANHOLE

NOTES:

1. SEE ESR PLAN AND PROFILE FOR ADDITIONAL INFORMATION
2. SEE GRADING PLANS FOR PAVEMENT CONTOUR INFORMATION
3. CONCRETE PAVING FOR CROSS STREET TO MATCH SERVICE ROAD CONSTRUCTION
4. REMOVAL OF EXISTING STRIPING AND MARKERS IS INCIDENTAL, NO SEPARATE PAY ITEM
5. CONTRACTOR SHALL PROVIDE A MINIMUM 8" DEPTH OF BASE MATERIAL FOR WIDENED PAVEMENT SECTION. BASE MATERIAL MAY BE SALVACED FROM CR49. NO SEPARATE PAY ITEM.
6. TAPER ALL CURB ENDS 0.5" TO 6" OVER 10'.

STATE OF TEXAS
DENNIS D. SATRE
71590
REGISTERED PROFESSIONAL ENGINEER
12/28/06

NO.	DATE	REVISION	APPROV.

DALLAS PARKWAY EXTENSION

COLLIN COUNTY

PAVING PLAN – PROFILE
COUNTY ROAD 4

Halff Associates, Inc.
ENGINEERS · ARCHITECTS · SCIENTISTS · PLANNERS · SURVEYORS

DRAWN	MDB	DESIGNED	DDS
CHECKED	DDS	SCALE	1"=40'(H), 1"=5'(V)
DATE	DEC 2006		

BOND PROJECT NO. 03-13 SHEET 93 OF 271

P-200612-01

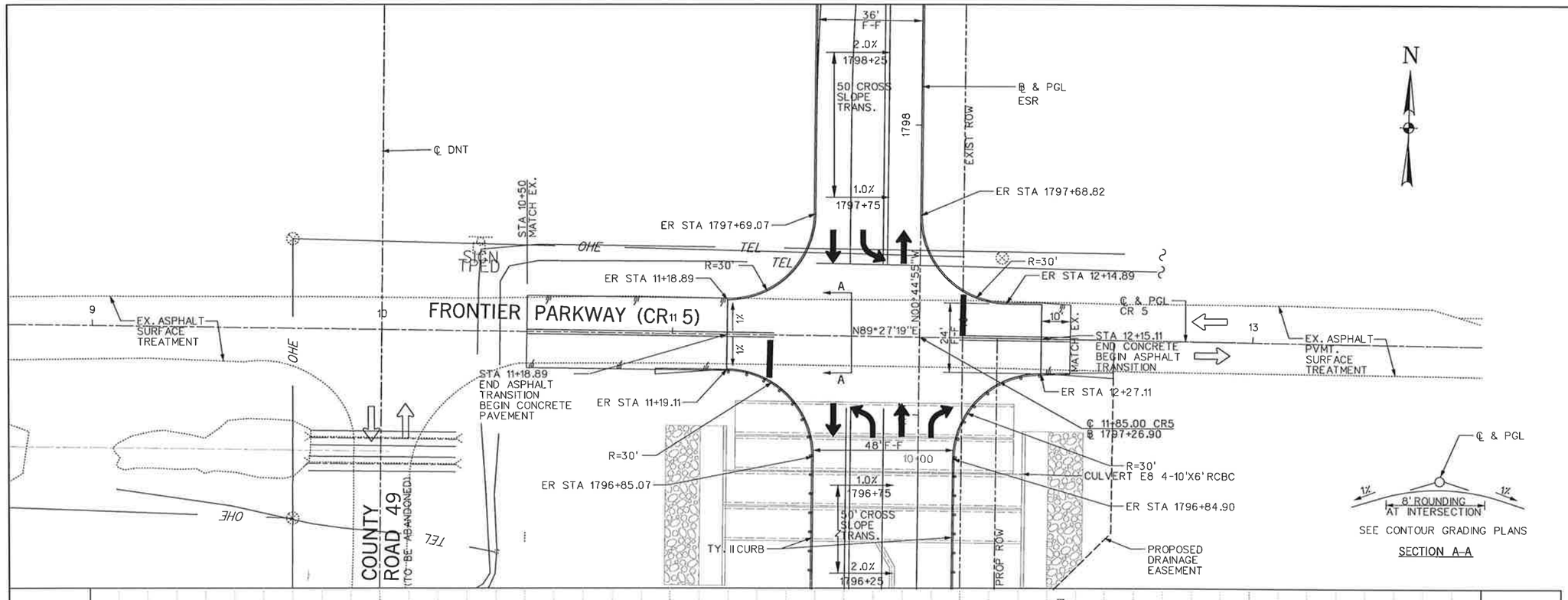

SEE CONTOUR GRADING PLANS

SECTION A-A

LEGEND

PGL	PROFILE GRADE LINE
⇨	EXISTING TRAFFIC LANE
➡	PROPOSED TRAFFIC LANE
⇨ (dashed)	FUTURE TRAFFIC LANE
T#	SOIL BORING
CP#	CONTROL POINT / BENCHMARK

EXISTING UTILITIES

—TEL—	BURIED PHONE	FH	FIRE HYDRANT
—OHE—	OVHD. ELECTRIC	WM	WATER METER
⊗	POWER POLE	WV	WATER VALVE
	GUY WIRE	WMH	WATER MANHOLE

NOTES:

1. SEE ESR PLAN AND PROFILE FOR ADDITIONAL INFORMATION
2. SEE GRADING PLANS FOR PAVEMENT CONTOUR INFORMATION
3. CONCRETE PAVING FOR CROSS STREET TO MATCH SERVICE ROAD CONSTRUCTION
4. TAPER ALL CURB ENDS 0.5" TO 6" OVER 5'.

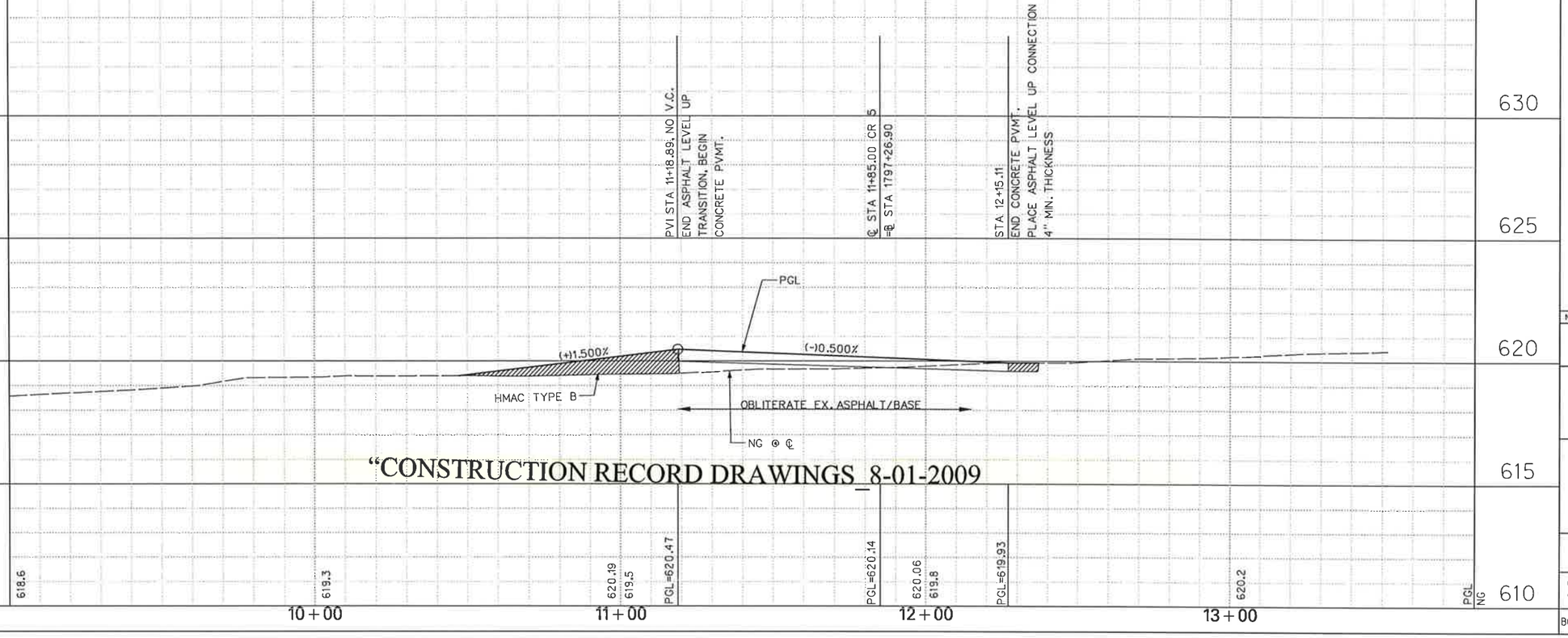

"CONSTRUCTION RECORD DRAWINGS_8-01-2009

STATE OF TEXAS
DENNIS D. SATRE
71590
REGISTERED PROFESSIONAL ENGINEER
12/28/06

NO.	DATE	REVISION	APPROV.

DALLAS PARKWAY EXTENSION

COLLIN COUNTY

PAVING PLAN – PROFILE
COUNTY ROAD 5

Halff Associates, Inc.
ENGINEERS · ARCHITECTS · SCIENTISTS · PLANNERS · SURVEYORS

DRAWN MDB DATE DEC 2006 | DESIGNED DDS DATE
CHECKED DDS DATE | SCALE 1"=40'(H), 1"=5'(V)

BOND PROJECT NO. 03-13 SHEET 94 OF 271

P-200612-01

1:35:35 PM
i:\23000s\23819\frisco\dgn\23819frplp36.dgn
12/27/2006 1:35:35 PM

i:\23000s\23819\frisco\dgn\23819frplp37.dgn

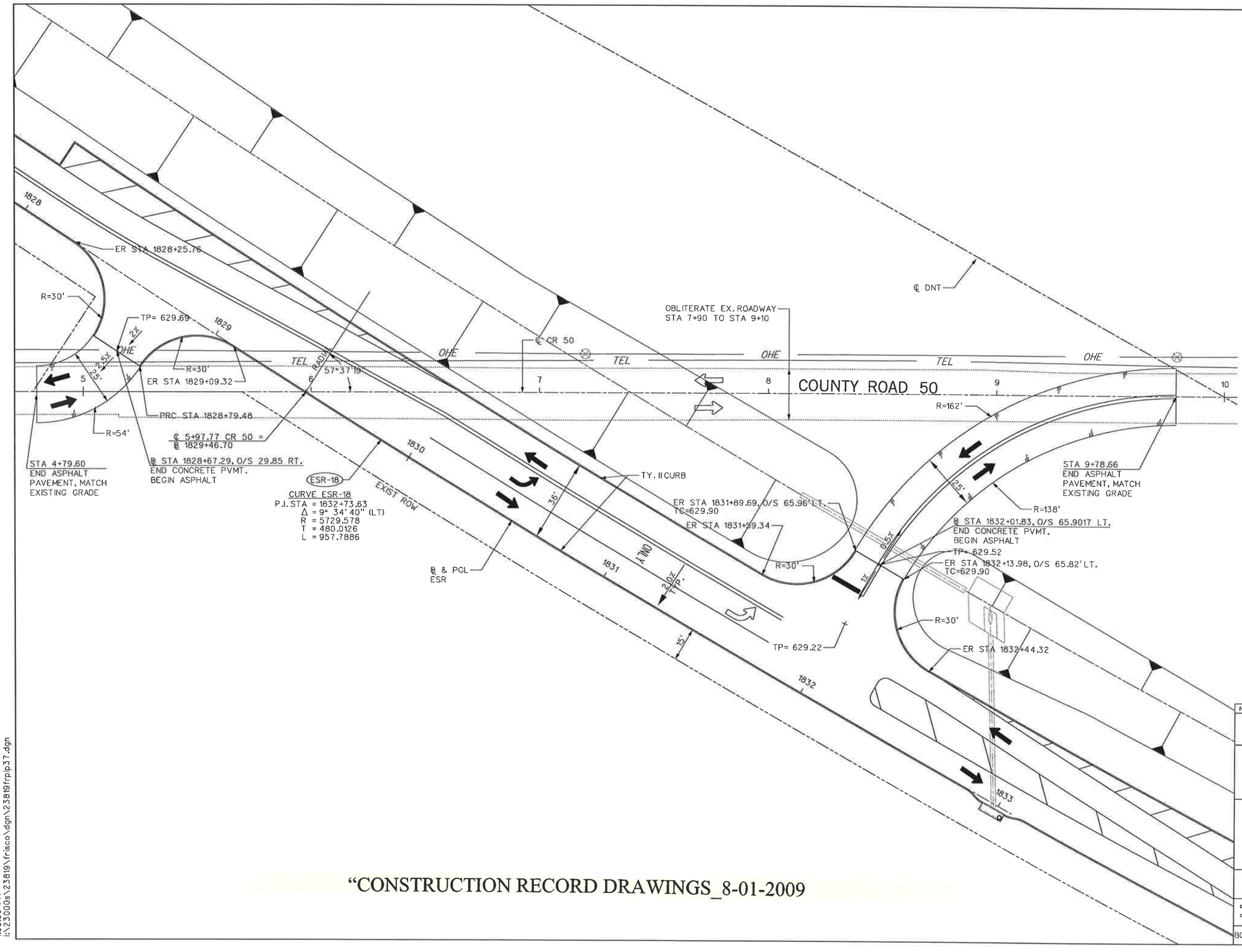

N

0 20 40 60 80

SCALE IN FEET

LEGEND

- PGL — PROFILE GRADE LINE
- EXISTING TRAFFIC LANE
- PROPOSED TRAFFIC LANE
- FUTURE TRAFFIC LANE
- SOIL BORING #
- CONTROL POINT / BENCHMARK CP#

EXISTING UTILITIES

- TEL — BURIED PHONE
- OHE — OVHD. ELECTRIC
- POWER POLE
- GUY WIRE
- FH — FIRE HYDRANT
- WM — WATER METER
- WV — WATER VALVE
- WMH — WATER MANHOLE

NOTES:

1. SEE ESR PLAN AND PROFILE FOR ADDITIONAL INFORMATION
2. SEE GRADING PLANS FOR PAVEMENT CONTOUR INFORMATION
3. TAPER ALL CURB ENDS ON APPROACHES 0.5" TO 6" OVER 5'
4. ASPHALT PAVEMENT ON NEW ALIGNMENT SHALL CONSIST OF 4" HMAC TYPE B ON 8" FLEXIBLE BASE (GRADE 2) NO R.A.P. ALLOWED
5. EXISTING COUNTY ROAD BASE MATERIALS OVERLAYED WITH 2" TYPE B HMAC AND TIED INTO MATCH EXISTING GRADE.

STATE OF TEXAS
DENNIS D. SATRE
71590
REGISTERED
PROFESSIONAL ENGINEER
12/28/06

"CONSTRUCTION RECORD DRAWINGS_8-01-2009

NO.	DATE	REVISION	APPROV.

DALLAS PARKWAY EXTENSION

COLLIN COUNTY

PAVING & GRADING PLAN
COUNTY ROAD 50

Halff Associates, Inc.
ENGINEERS · ARCHITECTS · SCIENTISTS · PLANNERS · SURVEYORS

DRAWN MDB DATE DEC 2006 DESIGNED DDS DATE
CHECKED DDS DATE SCALE

BOND PROJECT NO. 03-13 SHEET 95 OF 271

P-200612-01

12/27/2006 1:35:36 PM

1:35:36 PM
i:\23000s\23819\frisco\dgn\23819frplp37.dgn

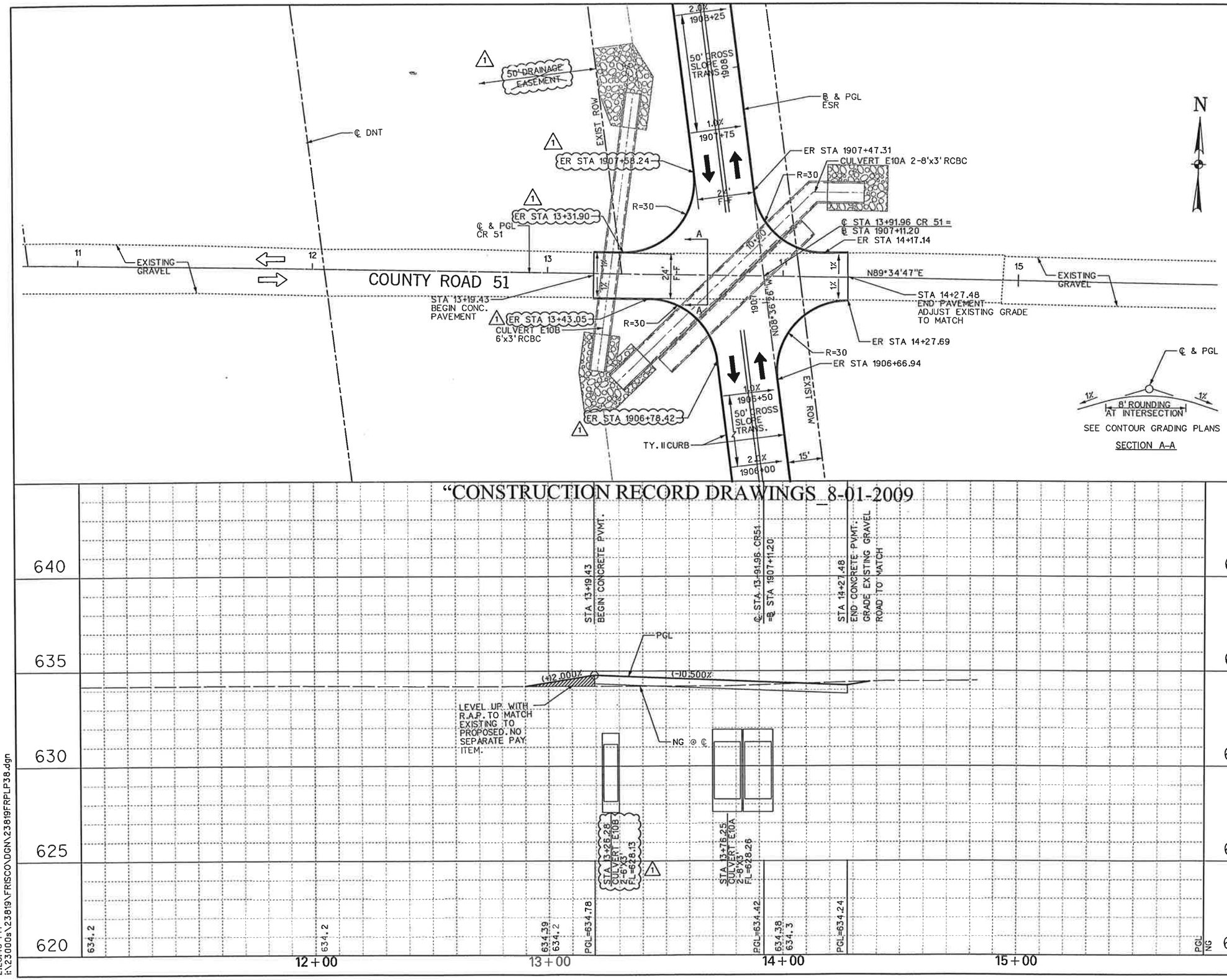

"CONSTRUCTION RECORD DRAWINGS 8-01-2009

NOTES:

1. SEE ESR PLAN AND PROFILE FOR ADDITIONAL INFORMATION
2. SEE GRADING PLANS FOR PAVEMENT CONTOUR INFORMATION
3. CONCRETE PAVING FOR CROSS STREET TO MATCH SERVICE ROAD CONSTRUCTION
4. TAPER CURB ENDS 0.5" TO 6" OVER 5'

LEGEND

PGL	PROFILE GRADE LINE
⇨	EXISTING TRAFFIC LANE
➡	PROPOSED TRAFFIC LANE
⇨	FUTURE TRAFFIC LANE
#	SOIL BORING
CP#	CONTROL POINT / BENCHMARK

EXISTING UTILITIES

—TEL—	BURIED PHONE	FH	FIRE HYDRANT
—OHE—	OVHD. ELECTRIC	WM	WATER METER
⊗	POWER POLE	WV	WATER VALVE
→	GUY WIRE	WMH	WATER MANHOLE

STATE OF TEXAS
DENNIS D. SATRE
71590
REGISTERED PROFESSIONAL ENGINEER
9.27.07

NO.	DATE	REVISION	APPROV.
1	9/27/07	REVISED PAVING LIMITS - C.O.#2	D. SATRE

DALLAS PARKWAY EXTENSION

COLLIN COUNTY

PAVING PLAN – PROFILE
COUNTY ROAD 51

Halff Associates, Inc.
ENGINEERS · ARCHITECTS · SCIENTISTS · PLANNERS · SURVEYORS

DRAWN	MDB	DATE DEC 2006	DESIGNED DDS DATE
CHECKED	DDS	DATE	SCALE 1"=40'(H), 1"=5'(V)

BOND PROJECT NO. 03-13 SHEET 96 OF 271

10/9/2007 2:28:48 PM

P-200612-01

2:28:48 PM
i:\23000s\23819\FRISCO\DGN\23819FRPLP38.dgn

i:\23000s\23819\FRISCO\DGN\23819FRPLP40.dgn

"CONSTRUCTION RECORD DRAWINGS_8-01-2009

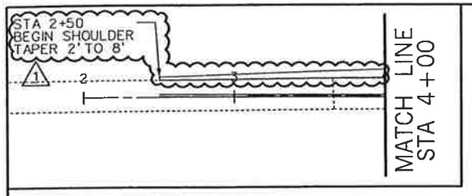

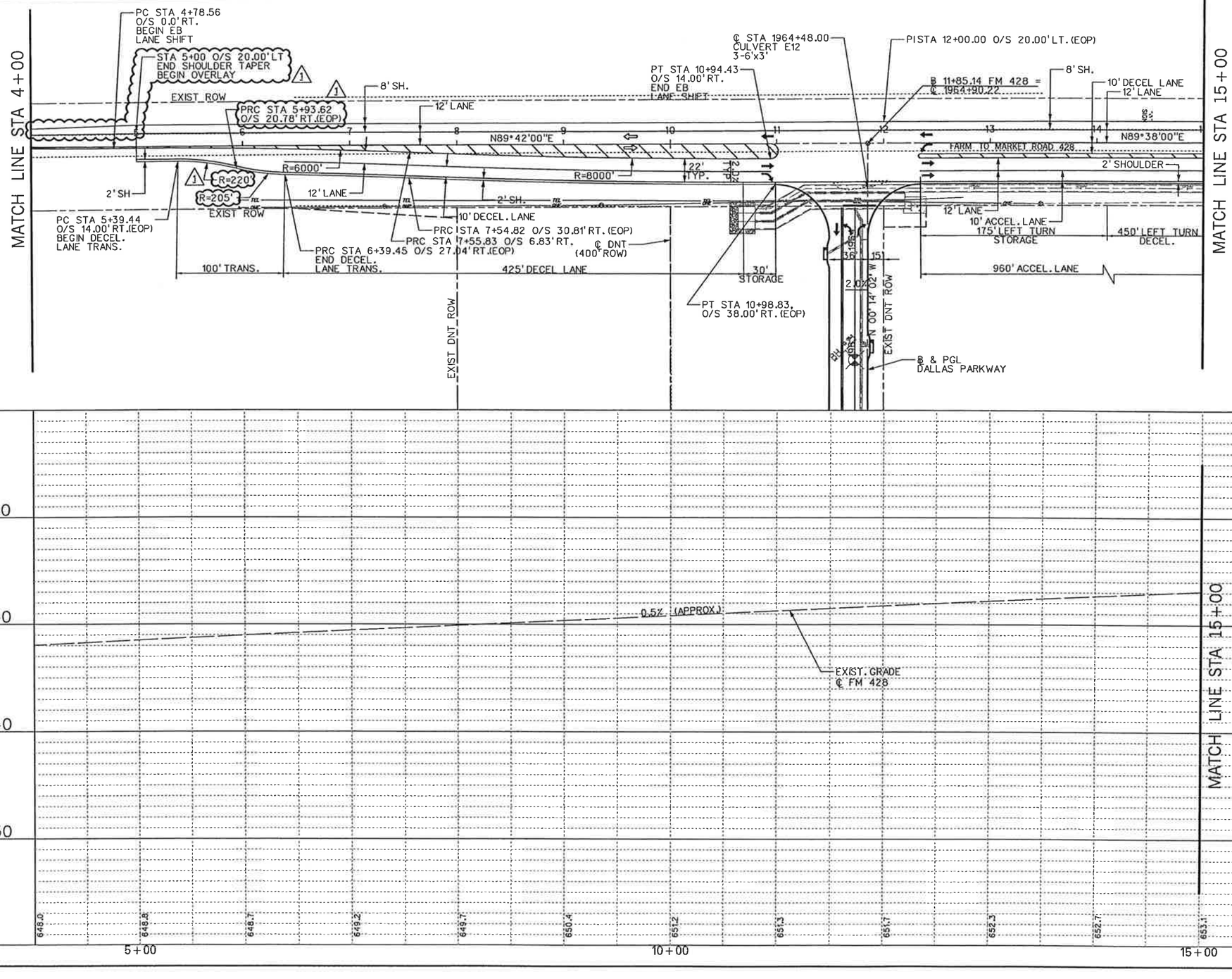

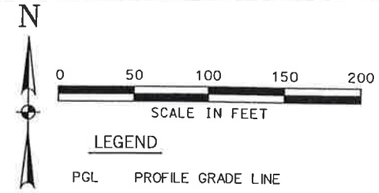

LEGEND

PGL	PROFILE GRADE LINE
⇨	EXISTING TRAFFIC LANE
➡	PROPOSED TRAFFIC LANE
⇨	FUTURE TRAFFIC LANE
℄	CENTERLINE
ℬ	BASELINE
	SOIL BORING
CP#	CONTROL POINT / BENCHMARK

EXISTING UTILITIES

OVHD. ELECTRIC		FH	FIRE HYDRANT
POWER POLE		WM	WATER METER
GUY WIRE		WV	WATER VALVE

NOTES:
1. FM 428 DESIGN SPEED = 55 MPH
DALLAS PARKWAY DESIGN SPEED = 45 MPH

2. A STOP CONDITION FOR DALLAS PARKWAY ONLY IS ASSUMED.

3. EXISTING UTILITES SHOWN ARE APPROXIMATE. CONTRACTOR SHALL CONFIRM PRESENCE AND LOCATION OF ALL UTILITIES PRIOR TO WORK.

4. SEE GEOMETRIC LAYOUT & SURVEY CONTROL DATA FOR HORIZONTAL DATUM & BENCHMARK INFORMATION.

5. SEE DRAINAGE PLAN FOR CURB INLET LOCATIONS.

6. SEE TYPICAL SECTIONS FOR ROADWAY PAVING DETAILS.

7. ALL PAVEMENT MARKINGS TO BE IN ACCORDANCE TXDOT STANDARD DRAWING LAYOUT. ALL STRIPE MARKINGS SHALL BE TYPE II. WORDS AND ARROWS SHALL BE TYPE II.

NO.	DATE	REVISION	APPROV.
1	3/30/07	TxDOT DRIVEWAY PERMIT - C.O. #1	D. SATRE

DALLAS PARKWAY EXTENSION

COLLIN COUNTY

PAVING PLAN
FARM TO MARKET ROAD 428
AT DALLAS PARKWAY

Halff Associates, Inc.
ENGINEERS · ARCHITECTS · SCIENTISTS · PLANNERS · SURVEYORS

DRAWN MDB DATE DEC 2006 DESIGNED DDS DATE
CHECKED DDS DATE SCALE 1"=100'(H), 1"=10'(V)

BOND PROJECT NO. 03-13 SHEET 97 OF 271

4:39:37 PM
i:\23000s\23819\FRISCO\DGN\23819FRPLP40.dgn

5/23/2007 4:39:37 PM

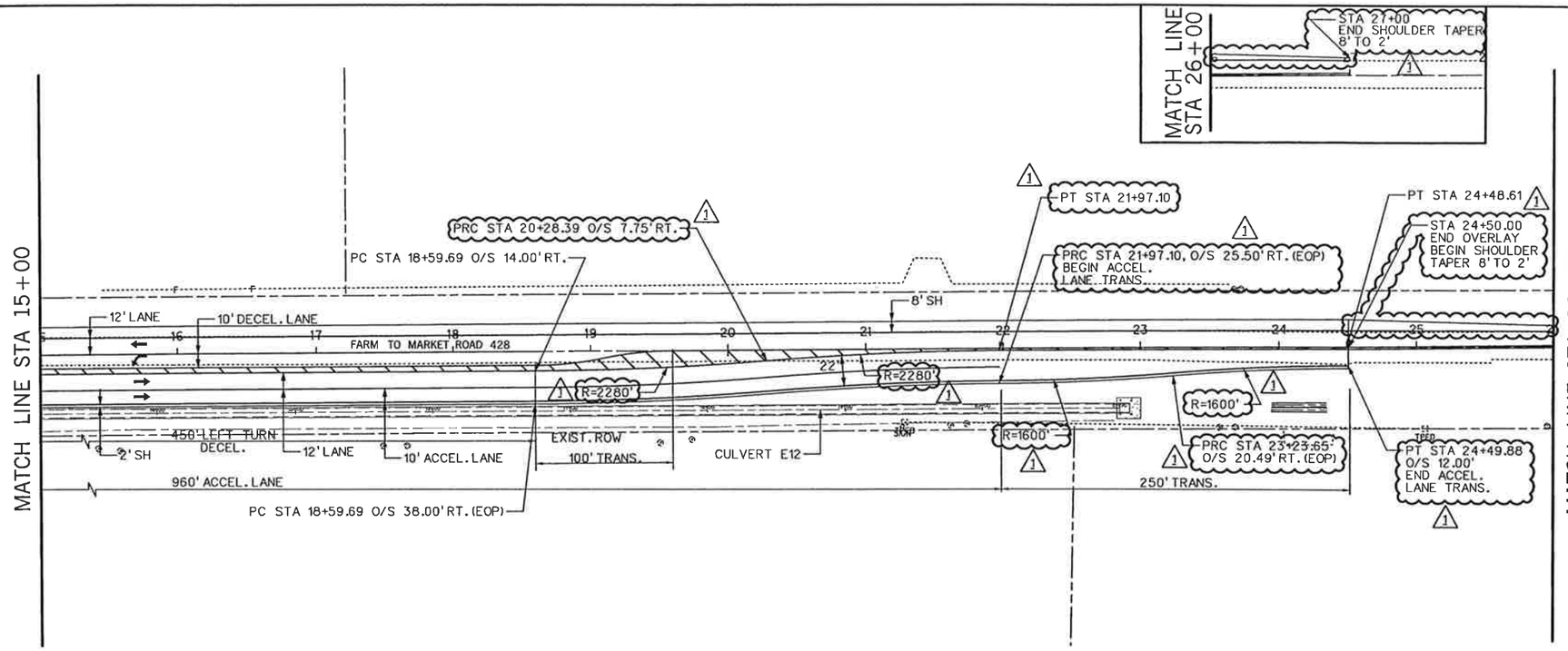

"CONSTRUCTION RECORD DRAWINGS_8-01-2009

N

0 50 100 150 200

SCALE IN FEET

LEGEND

- PGL — PROFILE GRADE LINE
- EXISTING TRAFFIC LANE
- PROPOSED TRAFFIC LANE
- FUTURE TRAFFIC LANE
- ℄ — CENTERLINE
- ℗ — BASELINE
- SOIL BORING
- CP# — CONTROL POINT / BENCHMARK

EXISTING UTILITIES

- OVHD. ELECTRIC
- POWER POLE
- GUY WIRE
- FH — FIRE HYDRANT
- WM — WATER METER
- WV — WATER VALVE

NOTES:

1. FM 428 DESIGN SPEED = 55 MPH
DALLAS PARKWAY DESIGN SPEED = 45 MPH

2. A STOP CONDITION FOR DALLAS PARKWAY ONLY IS ASSUMED.

3. EXISTING UTILITES SHOWN ARE APPROXIMATE. CONTRACTOR SHALL CONFIRM PRESENCE AND LOCATION OF ALL UTILITIES PRIOR TO WORK.

4. SEE GEOMETRIC LAYOUT & SURVEY CONTROL DATA FOR HORIZONTAL DATUM & BENCHMARK INFORMATION.

5. SEE DRAINAGE PLAN FOR CURB INLET LOCATIONS.

6. SEE TYPICAL SECTIONS FOR ROADWAY PAVING DETAILS.

7. ALL PAVEMENT MARKINGS TO BE IN ACCORDANCE TXDOT STANDARD DRAWING LAYOUT. ALL STRIPE MARKINGS SHALL BE TYPE II. WORDS AND ARROWS SHALL BE TYPE II.

STATE OF TEXAS
DENNIS D. SATRE
71590
REGISTERED PROFESSIONAL ENGINEER
3.30.07

NO.	DATE	REVISION	APPROV.
1	3/30/07	TxDOT DRIVEWAY PERMIT - C.O. #1	D. SATRE

DALLAS PARKWAY EXTENSION

COLLIN COUNTY

PAVING PLAN
FARM TO MARKET ROAD 428
AT DALLAS PARKWAY

Halff Associates, Inc.
ENGINEERS · ARCHITECTS · SCIENTISTS · PLANNERS · SURVEYORS

DRAWN MDB DATE DEC 2006 | DESIGNED DDS DATE
CHECKED DDS DATE | SCALE

BOND PROJECT NO. 03-13 SHEET 98 OF 271

4:46:43 PM
i:\23000s\23819\FRISCO\DGN\23819FRPLP41.dgn

5/23/2007 4:46:43 PM

P-200612-01

i:\23000s\23819\frisco\dgn\23819grprp01.dgn

MATCH LINE STA 1175+50

PROPOSED DRAINAGE EASEMENT

4" CONC RIP-RAP (RR9)

SEE CULVERT W2 LAYOUT

FL= 623.53

℄ DNT

0.30%

4:1 TYP.

36°11'56"

STA 1643+44.00 O/S 94.00'RT
FL= 623.52

FL CULVERT W2= 621.26

FL CULVERT W2= 621.04

15" STONE PROTECTION RIP-RAP

TRANSITION CROSSFALL STA 1642+80.00 TO STA 1641+83.62

75' WATER LINE EASEMENT (CITY OF IRVING)

EX. CR 27 ASPHALT PAVEMENT TO BE REMOVED, BASE MATERIAL TO BE OBLITERATED

GRADE TO DRAIN 0.30% MIN.
FL= 624.95

18" RCP

TRANSITION CROSSFALL STA 1640+00.00 TO STA 1638+80.34

GRADE TO DRAIN 0.30% MIN.

TEMPORARY SLOPE EASEMENT

EX. ROW

ER STA 1639+25.57
TC= 628.80

STA 1642+01.31 O/S 36'RT
TC= 629.16
END 6" CURB HEIGHT TRANS.

FL CULVERT W1 = 623.68

4" CONCRETE RIP-RAP (RR9)

EX. CONCRETE PAVEMENT TO BE REMOVED TO EDGE OF EXISTING SHOULDER

ER STA 1639+33.56
TC= 630.26

STA 1638+96.07, O/S 16.912'RT.
TC= 629.70
END 6" CURB HEIGHT TRANSITION

8' TYP.

CULVERT W1 6'X5' RCBC

FL CULVERT W1= 622.57

4" CONCRETE RIP-RAP (RR9)

EX. SIGNAL CONDUIT

EX. PULL BOX, TYP.

EX. 2-5'x2' RCBC

STA 1638+98.69, O/S 24'LT.
TC= 630.44
END 6" CURB HEIGHT TRANSITION

4" CONCRETE RIP-RAP (RR9)
FL= 625.85

4' SHOULDER

0.45% (APPROX.)

0.44% (APPROX.)

TRAFFIC SIGNAL POLE BY NTTA

ER STA 1641+95.31 O/S 36'RT
TC=TP= 628.66
BEGIN 6" CURB HEIGHT TRANS.

TP=628.95

TP=629.55

FUTURE TRAFFIC SIGNAL POLE

ER STA 1638+92.69, O/S 24'LT.
TC=TP= 629.93
BEGIN 6" CURB HEIGHT TRANSITION

STA 1638+80.34
MATCH EXISTING US 380 PVMT.

ER STA 1638+92.69, O/S 21.78'RT.
TC=TP= 630.20
BEGIN 6" CURB HEIGHT TRANSITION

℄ ESR

12' TURN LANE

STA 1641+83.62
MATCH EXISTING US 380 PAVEMENT

℄ WSR

STA 1641+96.08 O/S 20.67'LT.
TC=TP= 628.48
BEGIN 6" CURB HEIGHT TRANS.

STA 1641+99.52 O/S 15.77'LT.
TC= 628.95
END 6" CURB HEIGHT TRANS.

℄ US 380

FUTURE TRAFFIC SIGNAL POLE

WEST SERVICE ROAD CONSTRUCTION BY NTTA

EX. EAST SERVICE ROAD

"CONSTRUCTION RECORD DRAWINGS_8-01-2009

0 20 40 60 80
SCALE IN FEET

N

LEGEND

- PGL — PROFILE GRADE LINE
- EXISTING TRAFFIC LANE
- PROPOSED TRAFFIC LANE
- FUTURE TRAFFIC LANE
- SOIL BORING
- CP# — CONTROL POINT / BENCHMARK

EXISTING UTILITIES

- TEL — BURIED PHONE
- OHE — OVHD. ELECTRIC
- POWER POLE
- GUY WIRE
- FH — FIRE HYDRANT
- WM — WATER METER
- WV — WATER VALVE
- WMH — WATER MANHOLE

NOTE: US 380 IS SHOWN BASED ON FUTURE IMPROVEMENTS TO BE CONSTRUCTED BY NORTH TEXAS TOLLWAY AUTHORITY (NTTA)

STATE OF TEXAS
DENNIS D. SATRE
71590
REGISTERED PROFESSIONAL ENGINEER
6-01-07

NO.	DATE	REVISION	APPROV.
1	3/30/07	TxDOT DRIVEWAY PERMIT - C.O. #1	D. SATRE

DALLAS PARKWAY EXTENSION

COLLIN COUNTY

PROPOSED GRADING PLAN
DALLAS PARKWAY
AT US 380

Halff Associates, Inc.
ENGINEERS · ARCHITECTS · SCIENTISTS · PLANNERS · SURVEYORS

DRAWN MDB DATE DEC 2006 | DESIGNED DDS DATE
CHECKED DDS DATE | SCALE 1"=40'

BOND PROJECT NO. 03-13 SHEET 99 OF 271

6/1/2007 P-200642-01

4:04:47 PM
i:\23000s\23819\frisco\dgn\23819grprp01.dgn

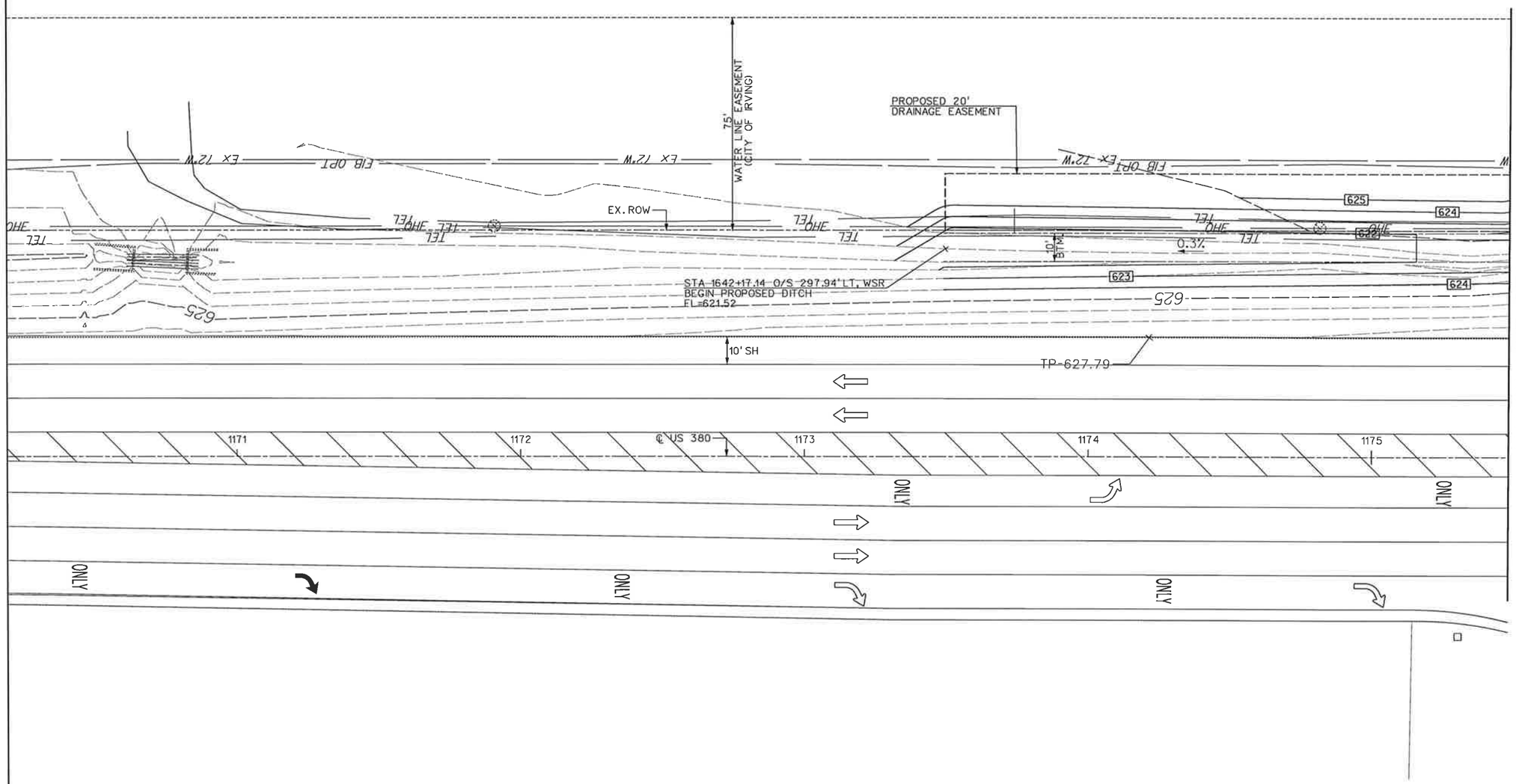

MATCH LINE STA 1175+50

0 20 40 60 80
SCALE IN FEET

N

LEGEND

PGL	PROFILE GRADE LINE
⇨	EXISTING TRAFFIC LANE
➡	PROPOSED TRAFFIC LANE
⇨	FUTURE TRAFFIC LANE
#	SOIL BORING
CP#	CONTROL POINT / BENCHMARK

EXISTING UTILITIES

TEL	BURIED PHONE	FH	FIRE HYDRANT
OHE	OVHD. ELECTRIC	WM	WATER METER
⊗	POWER POLE	WV	WATER VALVE
⤵	GUY WIRE	WMH	WATER MANHOLE

NOTE: US 380 IS SHOWN BASED ON FUTURE IMPROVEMENTS TO BE CONSTRUCTED BY NORTH TEXAS TOLLWAY AUTHORITY (NTTA)

"CONSTRUCTION RECORD DRAWINGS_8-01-2009

STATE OF TEXAS
DENNIS D. SATRE
71590
REGISTERED PROFESSIONAL ENGINEER
Dennis D. Satre 12/28/06

NO.	DATE	REVISION	APPROV.

DALLAS PARKWAY EXTENSION

COLLIN COUNTY, TEXAS

PROPOSED GRADING PLAN
DALLAS PARKWAY
AT US 380

Halff Associates, Inc.
ENGINEERS · ARCHITECTS · SCIENTISTS · PLANNERS · SURVEYORS

DRAWN MDB DATE DEC 2006 | DESIGNED DDS DATE
CHECKED DDS DATE | SCALE 1"=40'

BOND PROJECT NO. 03-13 SHEET 100 OF 271

R200613-01

NOTE:

1. SEE PAVING PLAN & PROFILE FOR PGL INFORMATION

0 20 40 60 80
SCALE IN FEET

N

LEGEND

- PGL — PROFILE GRADE LINE
- EXISTING TRAFFIC LANE
- PROPOSED TRAFFIC LANE
- FUTURE TRAFFIC LANE
- # — SOIL BORING
- CP# — CONTROL POINT / BENCHMARK

EXISTING UTILITIES

- TEL — BURIED PHONE
- OHE — OVHD. ELECTRIC
- POWER POLE
- GUY WIRE
- FH — FIRE HYDRANT
- WM — WATER METER
- WV — WATER VALVE
- WMH — WATER MANHOLE

℄ DNT
EX. ROW
CULVERT E4
2-6'x4' RCBC
ER STA 1692+26.46, O/S 36.00'LT.
TC= 623.00
FL CULVERT E4= 615.72
12" STONE PROTECTION RIP-RAP
4:1 TYP.
4' TYP.
ER STA 11+18.33, O/S 12.0'LT.
TP= 622.41
GRADE TO DRAIN 0.30% MIN.
TRANSITION CROSSFALL STA 1693+00 TO STA 1692+50
ER STA 1692+24.90
TC= 622.65
FL CULVERT E4= 616.00
PROPOSED DRAINAGE EASEMENT
12" STONE PROTECTION RIP-RAP
8' TYP.
ER STA 12+14.34 O/S 12.0'LT.
TP=622.26
℄ & PGL CR 3
FIRST STREET (CR 3)
STA 10+40.00
BEGIN ASPHALT TRANSITION
MATCH EXISTING GRADE
STA 11+18.33
BEGIN CONCRETE PAVEMENT
END ASPHALT TRANSITION
ER STA 11+18.33, O/S 12.0'RT
TP= 622.41
STA 12+27.71
END CONCRETE PAVEMENT
BEGIN ASPHALT LEVEL UP TRANSITION
ER STA 12+27.71, O/S 12.0'RT.
TP= 622.20
LIP=619.0
ER STA 1691+40.89
TC= 622.61
ER STA 1691+42.45, 36.00'LT.
TC= 622.97
TRANSITION CROSSFALL STA 1691+25 TO STA 1690+75
GRADE TO DRAIN
COUNTY ROAD 27
(TO REMAIN)
FIB-OPT
FH
℄ & PGL ESR
Ex 12"W
OHE
TEL
620
621
622
622.2
622.4
1693
1692
1691
1690
2%
1%

STATE OF TEXAS
DENNIS D. SATRE
71590
REGISTERED PROFESSIONAL ENGINEER
12/28/06

NO.	DATE	REVISION	APPROV.

DALLAS PARKWAY EXTENSION

COLLIN COUNTY

PROPOSED GRADING PLAN
DALLAS PARKWAY
AT CR3

Halff Associates, Inc.
ENGINEERS · ARCHITECTS · SCIENTISTS · PLANNERS · SURVEYORS

DRAWN MDB DATE DEC 2006 DESIGNED DDS DATE
CHECKED DDS DATE SCALE 1"=40'

BOND PROJECT NO. 03-13 SHEET 101 OF 271

"CONSTRUCTION RECORD DRAWINGS 8-01-2009

P-200612-01

i:\23000s\23819\frisco\dgn\23819grprp04.dgn

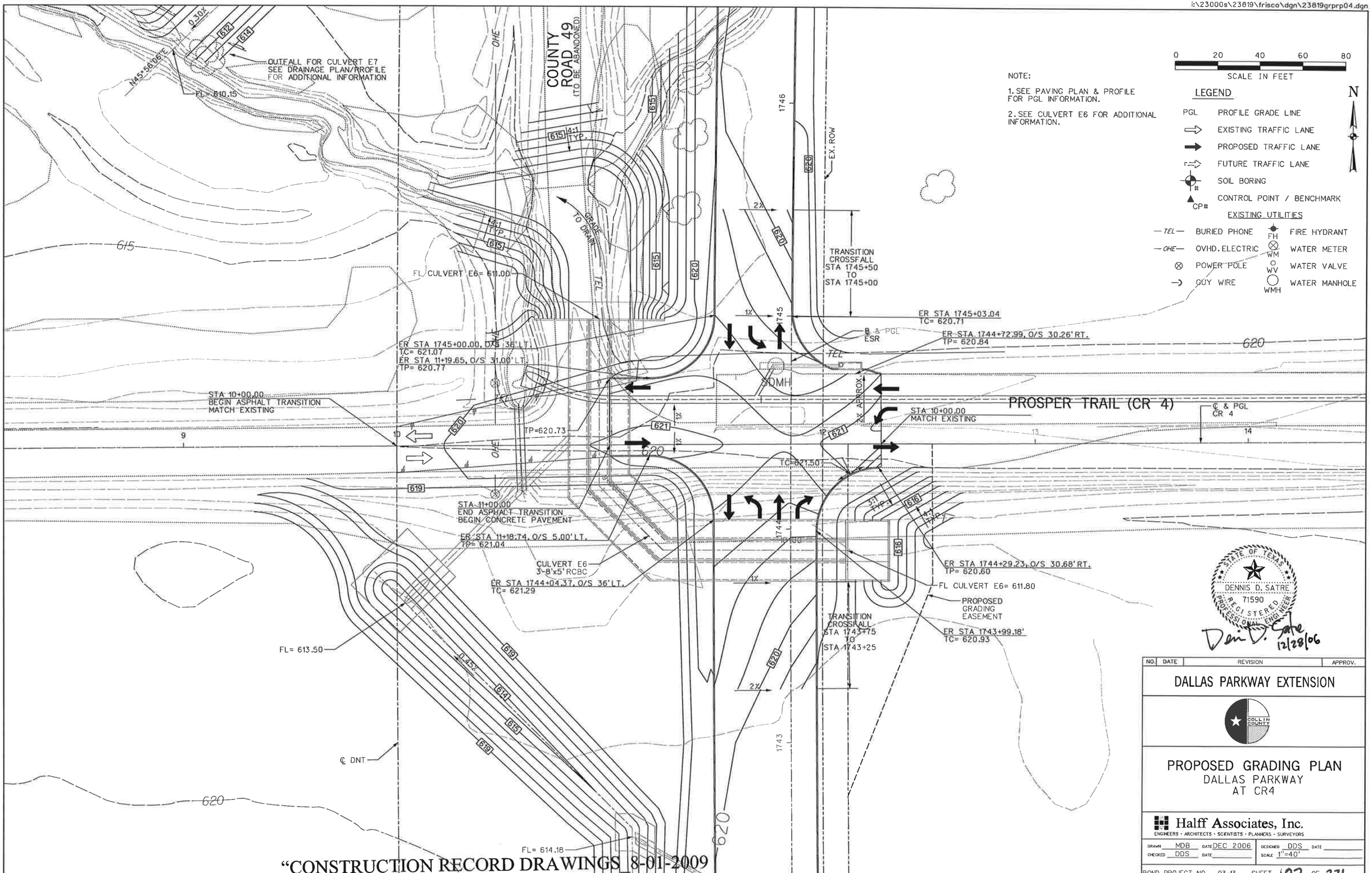

NOTE:

1. SEE PAVING PLAN & PROFILE FOR PGL INFORMATION.
2. SEE CULVERT E6 FOR ADDITIONAL INFORMATION.

0 20 40 60 80
SCALE IN FEET

LEGEND

PGL	PROFILE GRADE LINE
	EXISTING TRAFFIC LANE
	PROPOSED TRAFFIC LANE
	FUTURE TRAFFIC LANE
#	SOIL BORING
CP#	CONTROL POINT / BENCHMARK

EXISTING UTILITIES

—TEL—	BURIED PHONE	FH	FIRE HYDRANT
—OHE—	OVHD. ELECTRIC	WM	WATER METER
	POWER POLE	WV	WATER VALVE
	GUY WIRE	WMH	WATER MANHOLE

STATE OF TEXAS
DENNIS D. SATRE
71590
REGISTERED PROFESSIONAL ENGINEER
Den D. Satre 12/28/06

NO.	DATE	REVISION	APPROV.

DALLAS PARKWAY EXTENSION

COLLIN COUNTY

PROPOSED GRADING PLAN
DALLAS PARKWAY
AT CR4

Halff Associates, Inc.
ENGINEERS · ARCHITECTS · SCIENTISTS · PLANNERS · SURVEYORS

DRAWN MDB DATE DEC 2006 DESIGNED DDS DATE
CHECKED DDS DATE SCALE 1"=40'

BOND PROJECT NO. 03-13 SHEET 102 OF 271

"CONSTRUCTION RECORD DRAWINGS_8-01-2009

P-200612-01

1:54:26 PM
i:\23000s\23819\frisco\dgn\23819grprp04.dgn

12/27/2006 1:54:26 PM

I:\23000s\23819\FRISCO\DGN\23819GRPRP05.dgn

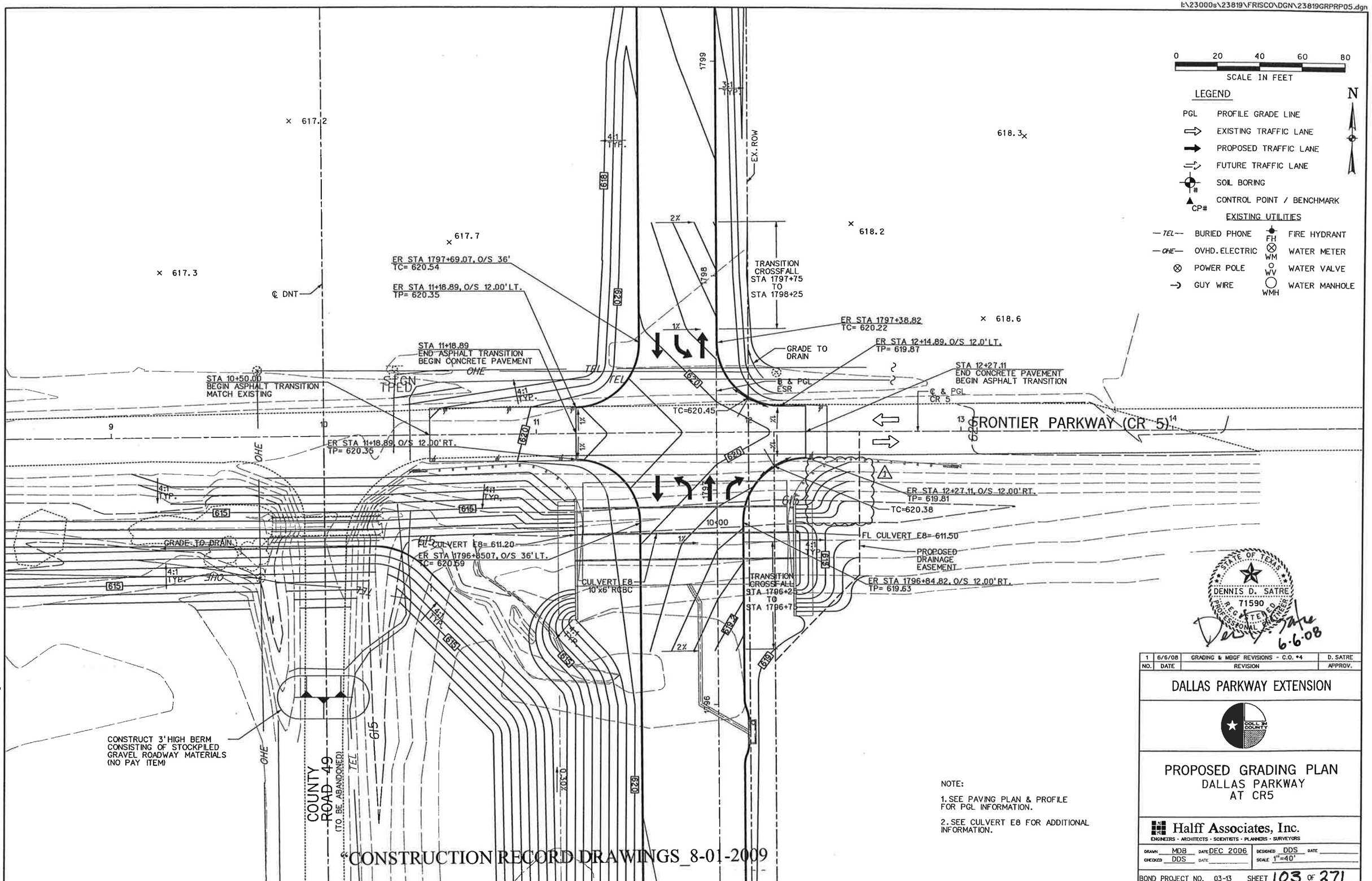

NOTE:

1. SEE PAVING PLAN & PROFILE FOR PGL INFORMATION.

2. SEE CULVERT E8 FOR ADDITIONAL INFORMATION.

STATE OF TEXAS
DENNIS D. SATRE
71590
REGISTERED PROFESSIONAL ENGINEER

Dennis D. Satre 6-6-08

NO.	DATE	REVISION	APPROV.
1	6/6/08	GRADING & MBGF REVISIONS - C.O. #4	D. SATRE

DALLAS PARKWAY EXTENSION

COLLIN COUNTY

PROPOSED GRADING PLAN
DALLAS PARKWAY
AT CR5

Halff Associates, Inc.
ENGINEERS · ARCHITECTS · SCIENTISTS · PLANNERS · SURVEYORS

DRAWN MDB DATE DEC 2006 DESIGNED DDS DATE
CHECKED DDS DATE SCALE 1"=40'

BOND PROJECT NO. 03-13 SHEET 103 OF 271

"CONSTRUCTION RECORD DRAWINGS_8-01-2009

10:45:44 AM
I:\23000s\23819\FRISCO\DGN\23819GRPRP05.dgn

6/6/2008 10:45:44 AM

P-200612-01

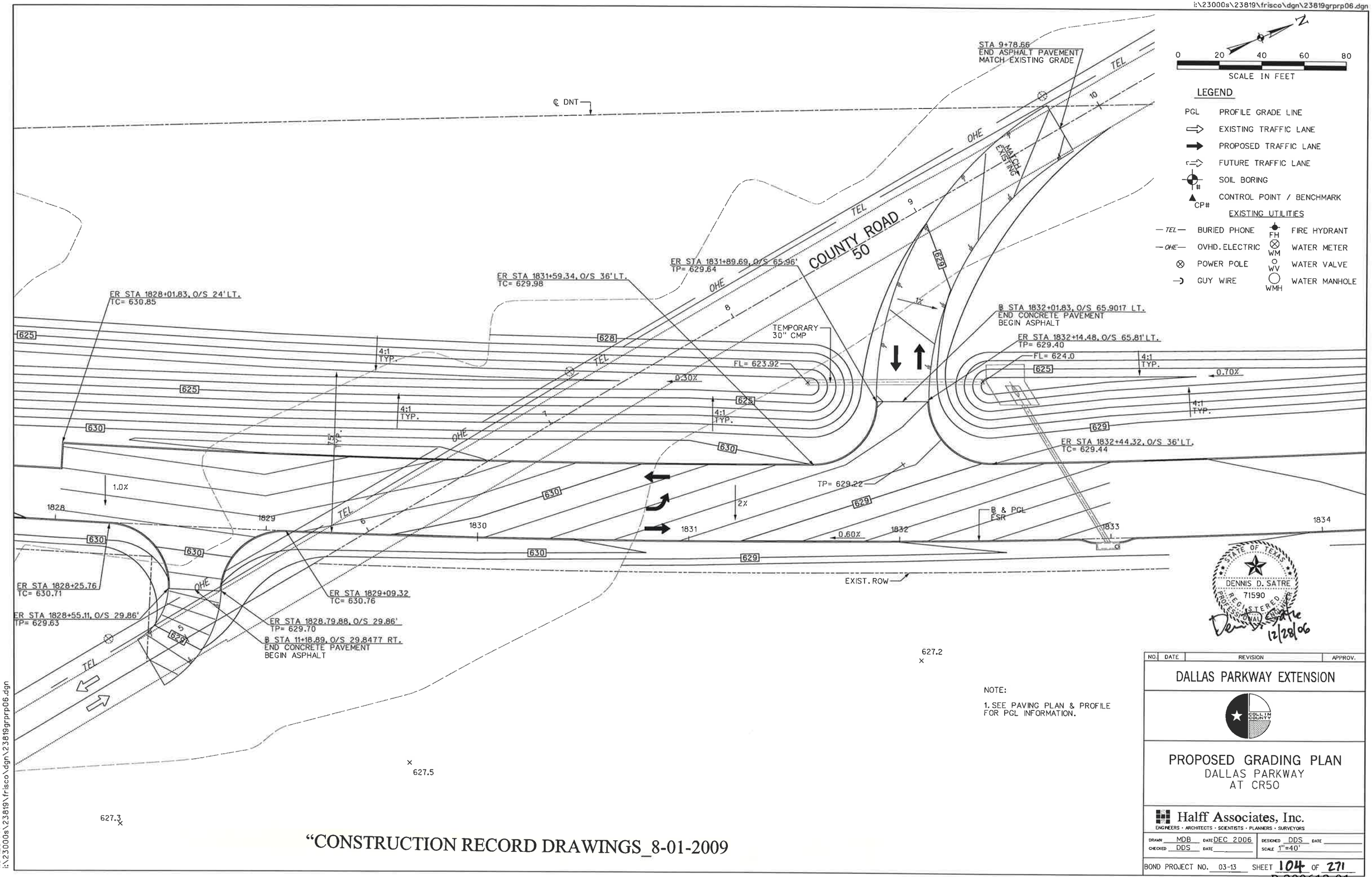

0 20 40 60 80
SCALE IN FEET

LEGEND

- PGL — PROFILE GRADE LINE
- EXISTING TRAFFIC LANE
- PROPOSED TRAFFIC LANE
- FUTURE TRAFFIC LANE
- # — SOIL BORING
- CP# — CONTROL POINT / BENCHMARK

EXISTING UTILITIES

- TEL — BURIED PHONE
- OHE — OVHD. ELECTRIC
- POWER POLE
- GUY WIRE
- FH — FIRE HYDRANT
- WM — WATER METER
- WV — WATER VALVE
- WMH — WATER MANHOLE

"CONSTRUCTION RECORD DRAWINGS_8-01-2009

STATE OF TEXAS
DENNIS D. SATRE
71590
REGISTERED
PROFESSIONAL
ENGINEER
12/28/06

NOTE:

1. SEE PAVING PLAN & PROFILE FOR PGL INFORMATION.

NO.	DATE	REVISION	APPROV.

DALLAS PARKWAY EXTENSION

COLLIN COUNTY

PROPOSED GRADING PLAN
DALLAS PARKWAY
AT CR50

Halff Associates, Inc.
ENGINEERS · ARCHITECTS · SCIENTISTS · PLANNERS · SURVEYORS

DRAWN MDB	DATE DEC 2006	DESIGNED DDS	DATE
CHECKED DDS	DATE	SCALE 1"=40'	

BOND PROJECT NO. 03-13 SHEET 104 OF 271

P-2006-12-01

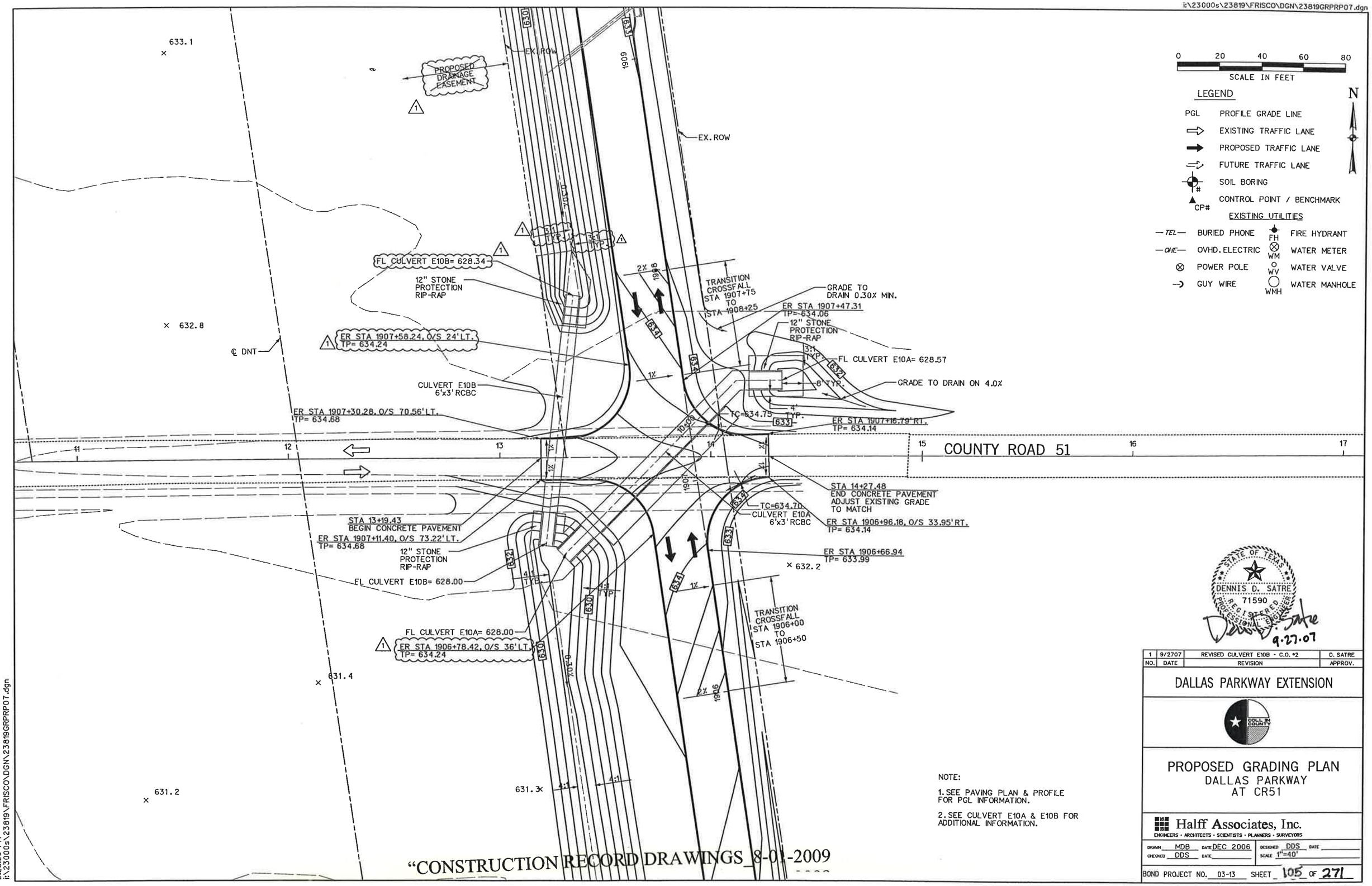

0 20 40 60 80
SCALE IN FEET

N

LEGEND

PGL	PROFILE GRADE LINE
⇨	EXISTING TRAFFIC LANE
➡	PROPOSED TRAFFIC LANE
⇨	FUTURE TRAFFIC LANE
#	SOIL BORING
CP#	CONTROL POINT / BENCHMARK

EXISTING UTILITIES

—TEL—	BURIED PHONE	FH	FIRE HYDRANT
—OHE—	OVHD. ELECTRIC	WM	WATER METER
⊗	POWER POLE	WV	WATER VALVE
—→	GUY WIRE	WMH	WATER MANHOLE

NOTE:

1. SEE PAVING PLAN & PROFILE FOR PGL INFORMATION.

2. SEE CULVERT E10A & E10B FOR ADDITIONAL INFORMATION.

"CONSTRUCTION RECORD DRAWINGS_8-01-2009

STATE OF TEXAS
DENNIS D. SATRE
71590
REGISTERED PROFESSIONAL ENGINEER
Dennis D. Satre
9.27.07

NO.	DATE	REVISION	APPROV.
1	9/2707	REVISED CULVERT E10B - C.O. #2	D. SATRE

DALLAS PARKWAY EXTENSION

COLLIN COUNTY

PROPOSED GRADING PLAN
DALLAS PARKWAY
AT CR51

Halff Associates, Inc.
ENGINEERS · ARCHITECTS · SCIENTISTS · PLANNERS · SURVEYORS

DRAWN	MDB	DATE DEC 2006	DESIGNED DDS DATE
CHECKED	DDS	DATE	SCALE 1"=40'

BOND PROJECT NO. 03-13 SHEET 105 OF 271

2:28:26 PM
i:\23000s\23819\FRISCO\DGN\23819GRPRP07.dgn

10/9/2007 2:28:26 PM

P-200612-01

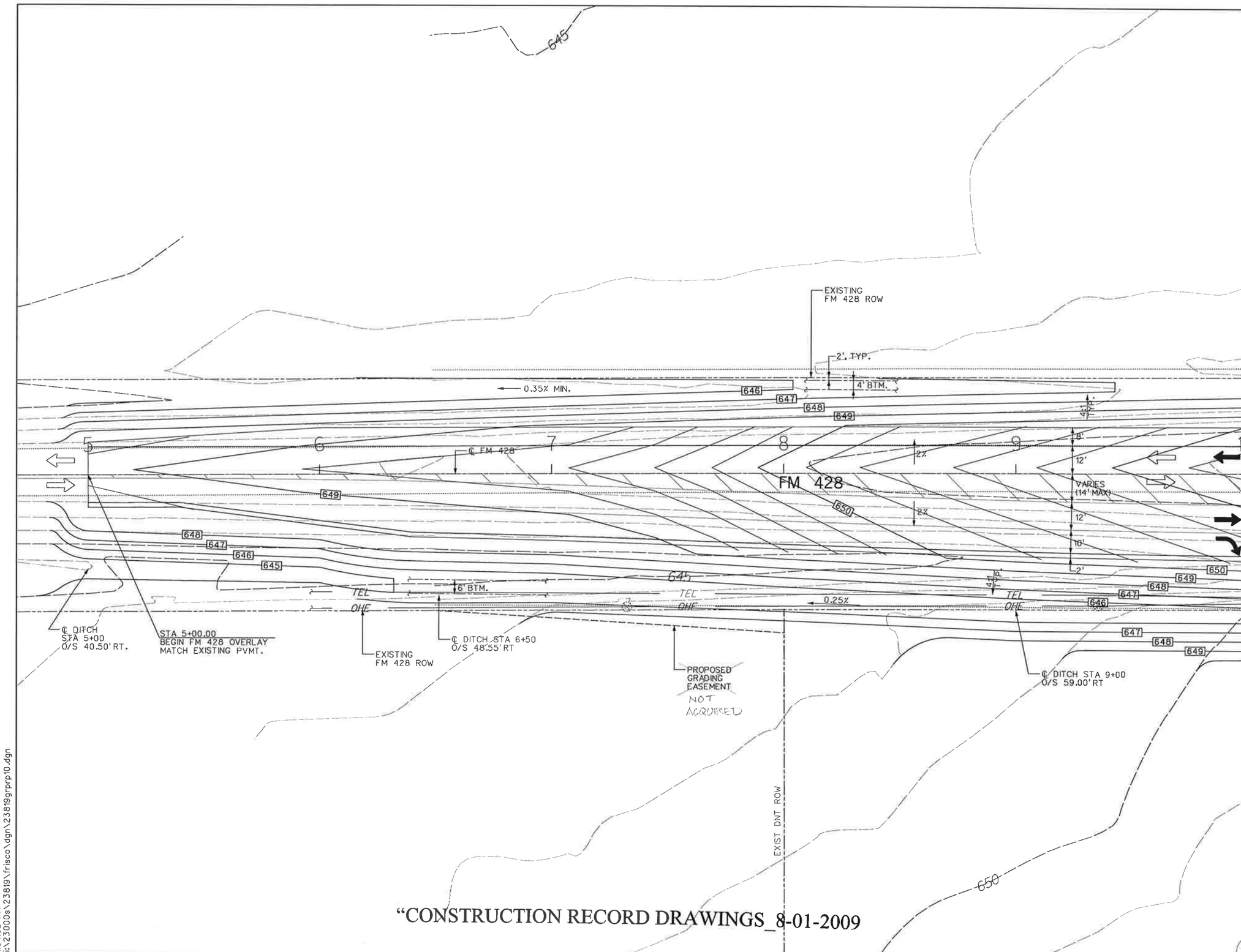

N

0 20 40 60 80
SCALE IN FEET

LEGEND

PGL	PROFILE GRADE LINE
	EXISTING TRAFFIC LANE
	PROPOSED TRAFFIC LANE
	FUTURE TRAFFIC LANE
℄	CENTERLINE
BL	BASELINE
#	SOIL BORING
CP#	CONTROL POINT / BENCHMARK

EXISTING UTILITIES

	OVHD. ELECTRIC	FH	FIRE HYDRANT
	POWER POLE	WM	WATER METER
	GUY WIRE	WV	WATER VALVE

NOTES:
1. THE GRADES SHOWN ARE INTENDED TO DEPICT A 2" OVERLAY OF EXISTING FM 428. CONTRACTOR SHALL ADJUST ELEVATIONS AS NECESSARY TO MEET THIS INTENT BASED ON ACTUAL CONDITIONS ENCOUNTERED AT THE TIME OF CONSTRUCTION.

2. SEE PROPOSED TYPICAL SECTIONS FOR ADDITIONAL INFORMATION

STATE OF TEXAS
DENNIS D. SATRE
71590
REGISTERED PROFESSIONAL ENGINEER
12/28/06

NO.	DATE	REVISION	APPROV.

DALLAS PARKWAY EXTENSION

COLLIN COUNTY

PROPOSED GRADING PLAN
FARM TO MARKET ROAD 428

Halff Associates, Inc.
ENGINEERS · ARCHITECTS · SCIENTISTS · PLANNERS · SURVEYORS

DRAWN MDB DATE DEC 2006 DESIGNED DDS DATE
CHECKED DDS DATE SCALE

BOND PROJECT NO. 03-13 SHEET 106 OF 271

"CONSTRUCTION RECORD DRAWINGS_8-01-2009

1:54:32 PM
i:\23000s\23819\frisco\dgn\23819grprp10.dgn

12/27/2006 1:54:32 PM

P-200612-01

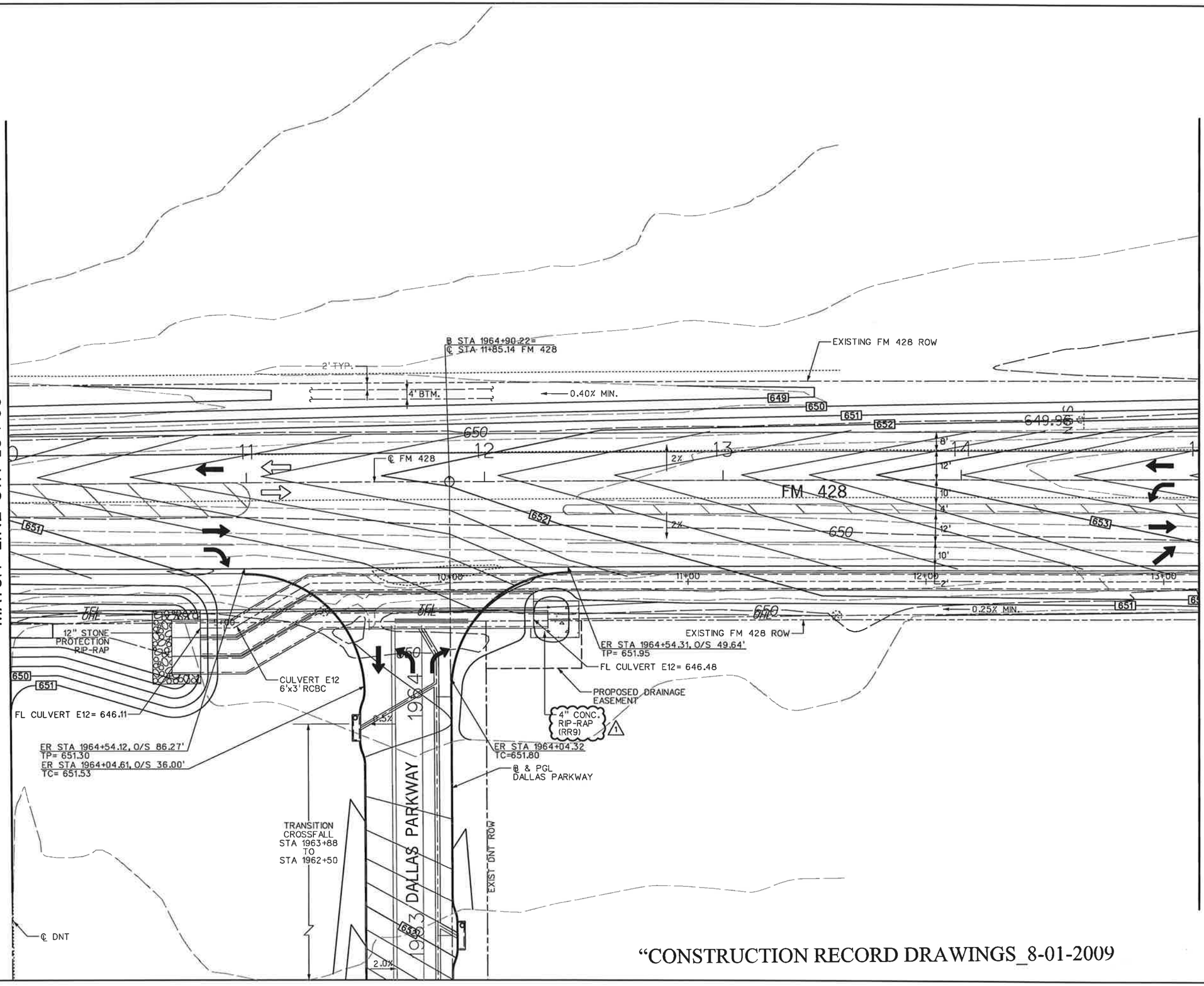

N

0 20 40 60 80

SCALE IN FEET

LEGEND

- PGL — PROFILE GRADE LINE
- EXISTING TRAFFIC LANE
- PROPOSED TRAFFIC LANE
- FUTURE TRAFFIC LANE
- ℄ — CENTERLINE
- ℄ — BASELINE
- # — SOIL BORING
- CP# — CONTROL POINT / BENCHMARK

EXISTING UTILITIES

- OVHD. ELECTRIC
- POWER POLE
- GUY WIRE
- FH — FIRE HYDRANT
- WM — WATER METER
- WV — WATER VALVE

NOTES:
1. THE GRADES SHOWN ARE INTENDED TO DEPICT A 2" OVERLAY OF EXISTING FM 428. CONTRACTOR SHALL ADJUST ELEVATIONS AS NECESSARY TO MEET THIS INTENT BASED ON ACTUAL CONDITIONS ENCOUNTERED AT THE TIME OF CONSTRUCTION.

2. SEE PROPOSED TYPICAL SECTIONS FOR ADDITIONAL INFORMATION

STATE OF TEXAS
DENNIS D. SATRE
71590
LICENSED PROFESSIONAL ENGINEER

3.30.07

NO.	DATE	REVISION	APPROV.
1	3/30/07	TxDOT DRIVEWAY PERMIT - C.O. #1	D. SATRE

DALLAS PARKWAY EXTENSION

COLLIN COUNTY

PROPOSED GRADING PLAN
FARM TO MARKET ROAD 428

Halff Associates, Inc.
ENGINEERS · ARCHITECTS · SCIENTISTS · PLANNERS · SURVEYORS

DRAWN MDB	DATE DEC 2006	DESIGNED DDS	DATE
CHECKED DDS	DATE	SCALE	

BOND PROJECT NO. 03-13 SHEET 107 OF 271

"CONSTRUCTION RECORD DRAWINGS_8-01-2009

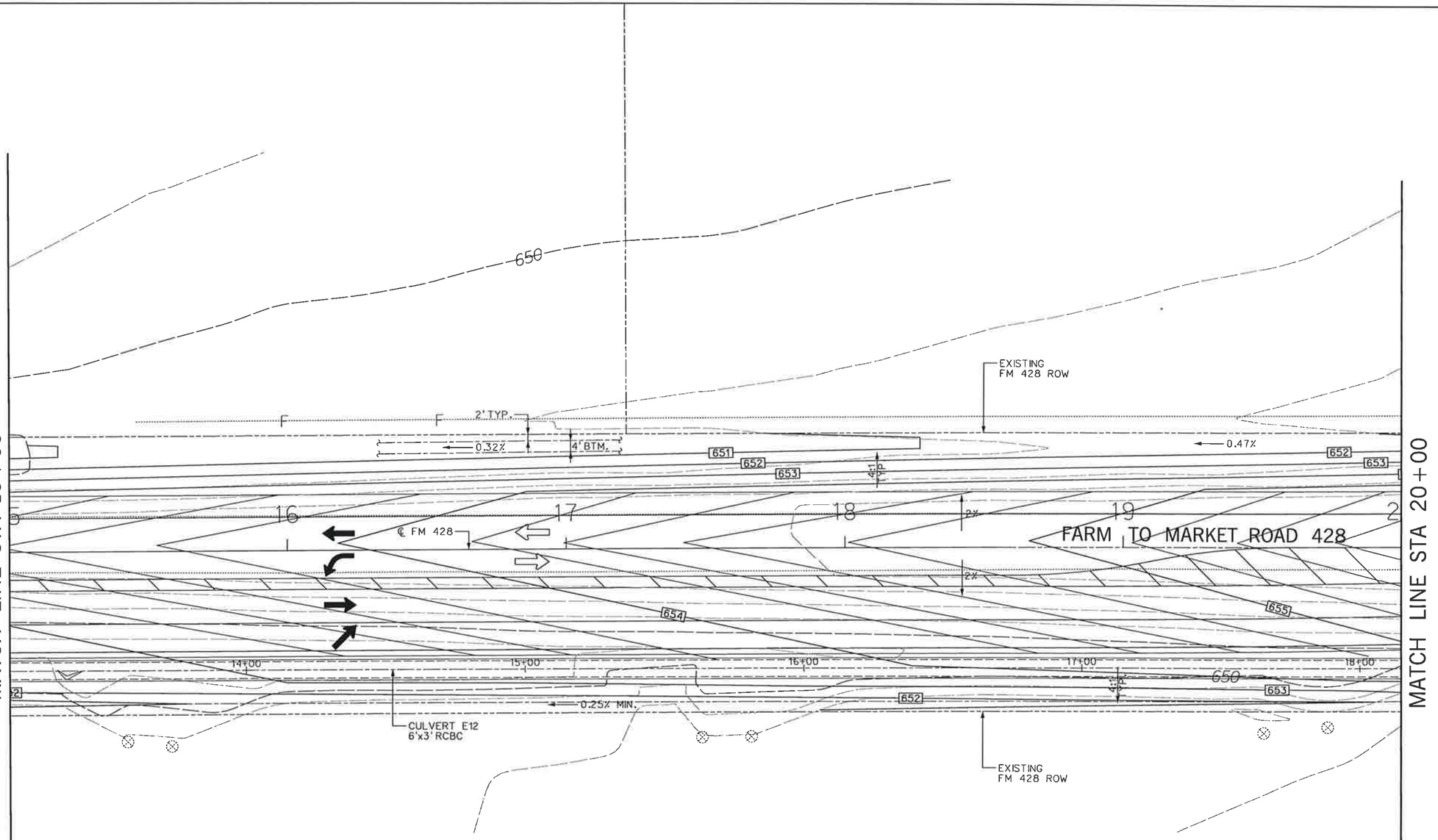

N

0 20 40 60 80

SCALE IN FEET

LEGEND

- PGL — PROFILE GRADE LINE
- EXISTING TRAFFIC LANE
- PROPOSED TRAFFIC LANE
- FUTURE TRAFFIC LANE
- ℄ — CENTERLINE
- ℗ — BASELINE
- # — SOIL BORING
- CP# — CONTROL POINT / BENCHMARK

EXISTING UTILITIES

- OVHD. ELECTRIC
- POWER POLE
- GUY WIRE
- FH — FIRE HYDRANT
- WM — WATER METER
- WV — WATER VALVE

NOTES:
1. THE GRADES SHOWN ARE INTENDED TO DEPICT A 2" OVERLAY OF EXISTING FM 428. CONTRACTOR SHALL ADJUST ELEVATIONS AS NECESSARY TO MEET THIS INTENT BASED ON ACTUAL CONDITIONS ENCOUNTERED AT THE TIME OF CONSTRUCTION.

2. SEE PROPOSED TYPICAL SECTIONS FOR ADDITIONAL INFORMATION

STATE OF TEXAS
DENNIS D. SATRE
71590
REGISTERED PROFESSIONAL ENGINEER
12/28/06

NO.	DATE	REVISION	APPROV.

DALLAS PARKWAY EXTENSION

COLLIN COUNTY

PROPOSED GRADING PLAN
FARM TO MARKET ROAD 428

Halff Associates, Inc.
ENGINEERS · ARCHITECTS · SCIENTISTS · PLANNERS · SURVEYORS

DRAWN MDB DATE DEC 2006 DESIGNED DDS DATE
CHECKED DDS DATE SCALE

BOND PROJECT NO. 03-13 SHEET 108 OF 271

"CONSTRUCTION RECORD DRAWINGS_8-01-2009

N

0 20 40 60 80
SCALE IN FEET

LEGEND

PGL PROFILE GRADE LINE
EXISTING TRAFFIC LANE
PROPOSED TRAFFIC LANE
FUTURE TRAFFIC LANE
℄ CENTERLINE
℄ BASELINE
SOIL BORING
CP# CONTROL POINT / BENCHMARK

EXISTING UTILITIES

OVHD. ELECTRIC
POWER POLE
GUY WIRE
FH FIRE HYDRANT
WM WATER METER
WV WATER VALVE

MATCH LINE STA 20+00

2' TYP.
4' BTM.
EXISTING FM 428 ROW
653
654
655
4:1 TYP.
STA 24+50.00
END ASPHALT OVERLAY
BEGIN ASPHALT SHOULDER TRANSITION
21
22
23
24
25
26
℄ FM 428
2%
FARM TO MARKET ROAD 428
656
657
658
19+00
20+00
21+00
0.44%
STOP SIGN
FL CULVERT E12= 649.14
EX. 2-36" RCP FL= 652.18
EXISTING FM 428 ROW
4" CONC. RIP-RAP (RR9)
TPED

STATE OF TEXAS
DENNIS D. SATRE
71590
REGISTERED PROFESSIONAL ENGINEER
3-30-07

NO.	DATE	REVISION	APPROV.
1	3/30/07	TxDOT DRIVEWAY PERMIT - C.O. #1	D. SATRE

DALLAS PARKWAY EXTENSION

COLLIN COUNTY

PROPOSED GRADING PLAN
FARM TO MARKET ROAD 428

Halff Associates, Inc.
ENGINEERS · ARCHITECTS · SCIENTISTS · PLANNERS · SURVEYORS

DRAWN MDB	DATE DEC 2006	DESIGNED DDS	DATE
CHECKED DDS	DATE	SCALE	

BOND PROJECT NO. 03-13 SHEET 109 OF 271

NOTES:
1. THE GRADES SHOWN ARE INTENDED TO DEPICT A 2" OVERLAY OF EXISTING FM 428. CONTRACTOR SHALL ADJUST ELEVATIONS AS NECESSARY TO MEET THIS INTENT BASED ON ACTUAL CONDITIONS ENCOUNTERED AT THE TIME OF CONSTRUCTION.

2. SEE PROPOSED TYPICAL SECTIONS FOR ADDITIONAL INFORMATION

"CONSTRUCTION RECORD DRAWINGS_8-01-2009

2:25:53 PM
i:\23000s\23819\FRISCO\DGN\23819GRPRP13.dgn

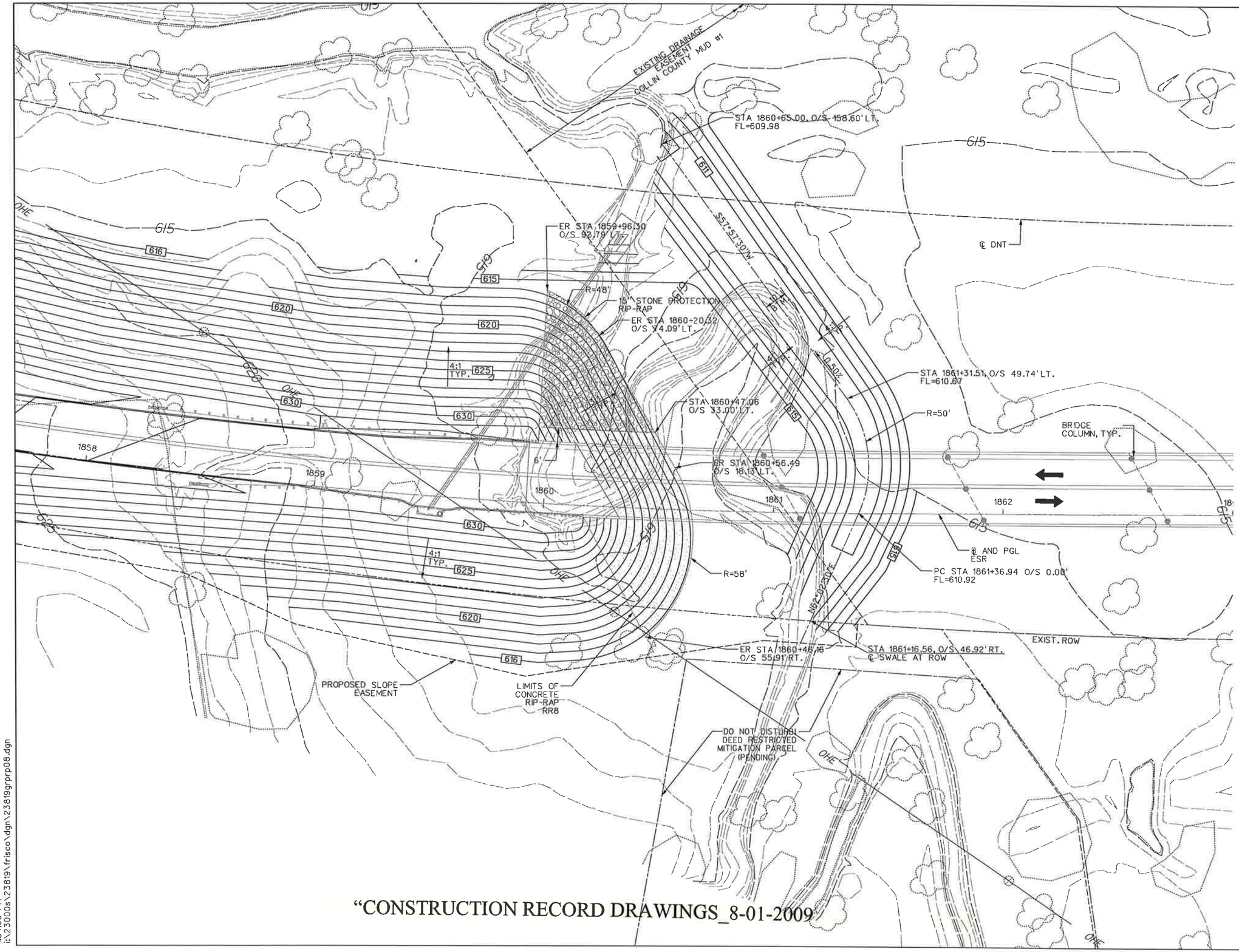

"CONSTRUCTION RECORD DRAWINGS_8-01-2009"

0 20 40 60 80
SCALE IN FEET

LEGEND

- PGL — PROFILE GRADE LINE
- EXISTING TRAFFIC LANE
- PROPOSED TRAFFIC LANE
- FUTURE TRAFFIC LANE
- SOIL BORING
- CP# — CONTROL POINT / BENCHMARK

EXISTING UTILITIES

- TEL — BURIED PHONE
- OHE — OVHD. ELECTRIC
- POWER POLE
- GUY WIRE
- FH — FIRE HYDRANT
- WM — WATER METER
- WV — WATER VALVE
- WMH — WATER MANHOLE

NOTE:

1. SEE PAVING PLAN & PROFILE FOR PGL INFORMATION.

STATE OF TEXAS
DENNIS D. SATRE
71590
REGISTERED PROFESSIONAL ENGINEER
12/28/06

NO.	DATE	REVISION	APPROV.

DALLAS PARKWAY EXTENSION

COLLIN COUNTY

PROPOSED GRADING PLAN
SOUTH ABUTMENT AT DOE BRANCH CROSSING

Halff Associates, Inc.
ENGINEERS · ARCHITECTS · SCIENTISTS · PLANNERS · SURVEYORS

DRAWN MDB DATE DEC 2006 | DESIGNED DDS DATE
CHECKED DDS DATE | SCALE 1"=40"

BOND PROJECT NO. 03-13 SHEET 110 OF 271

P-200612-01

i:\23000s\23819\FRISCO\DGN\23819GRPRP09.dgn

N

0 20 40 60 80
SCALE IN FEET

PI STA 1864+76.56, O/S 217.65'LT.
FL=609.70

PC STA 1865+14.69, O/S 177.58'LT.
FL=610.0

R=50'

℄ DNT

S83°58'04"W

ER STA 1866+73.38 O/S 96.93'LT.

16" STONE PROTECTION RIP-RAP

60" RCP LINE J3-1

4" CONCRETE RIP-RAP

EXISTING DRAINAGE EASEMENT COLLIN COUNTY MUD #1

10' BTM.

0.30%

4:1 TYP.

15" STONE PROTECTION RIP-RAP

ER STA 1866+11.21 O/S 33.00'LT.

BRIDGE BENT, TYP.

℄ & PGL ESR

STA 1865+54.02, O/S 45.47'RT.
℄ SWALE @ ROW
FL=610.68

EXIST. ROW

ER STA 1866+49.67 O/S 35.60 RT.

LIMITS OF CONCRETE RIP-RAP RR8

R=50'

ER STA 1866+88.65 O/S 65.00 RT.

DO NOT DISTURB! DEED RESTRICTED MITIGATION PARCEL (PENDING)

DOE BRANCH

PROPOSED SLOPE EASEMENT

4" CONCRETE RIP-RAP

15" STONE PROTECTION RIP-RAP

GRADE TO DRAIN

"CONSTRUCTION RECORD DRAWINGS_8-01-2009

STATE OF TEXAS
DENNIS D. SATRE
71590
REGISTERED PROFESSIONAL ENGINEER
12-28-06

NO.	DATE	REVISION	APPROV.

DALLAS PARKWAY EXTENSION

COLLIN COUNTY

PROPOSED GRADING PLAN
NORTH ABUTMENT
AT DOE BRANCH CROSSING

Halff Associates, Inc.
ENGINEERS · ARCHITECTS · SCIENTISTS · PLANNERS · SURVEYORS

DRAWN MDB DATE DEC 2006 | DESIGNED DDS DATE
CHECKED DDS DATE | SCALE 1"=40'

BOND PROJECT NO. 03-13 SHEET 111 OF 271

11:24:34 AM
i:\23000s\23819\FRISCO\DGN\23819GRPRP09.dgn

5/2/2007 11:24:34 AM

P-200612-01

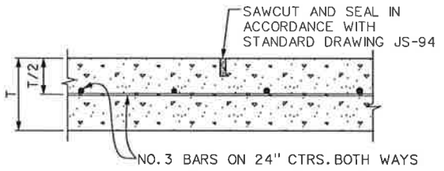

SAWED DUMMY JOINT (S)
(LONGITUDINAL AND TRANSVERSE)

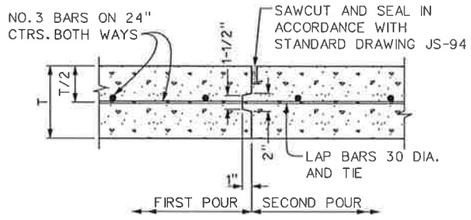

CONSTRUCTION JOINT
(LONGITUDINAL AND TRANSVERSE)

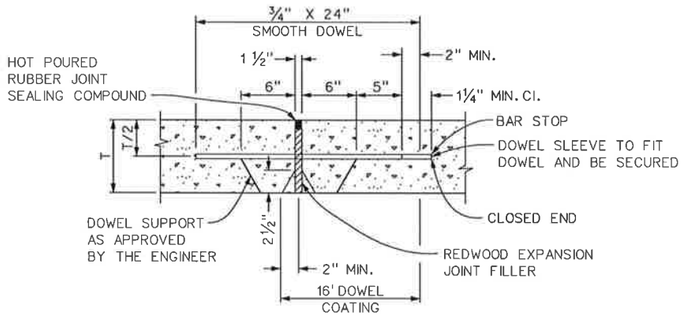

DOWELS SHALL BE SPACED AT 2'-0" MAXIMUM CENTERS USING A 6' MINIMUM CLEAR EDGE DISTANCE.

SPACING OF EXPANSION JOINTS SHALL NOT EXCEED 600 FEET.

TRANSVERSE EXPANSION JOINT (E)

LONGITUDINAL PAVEMENT CONNECTION

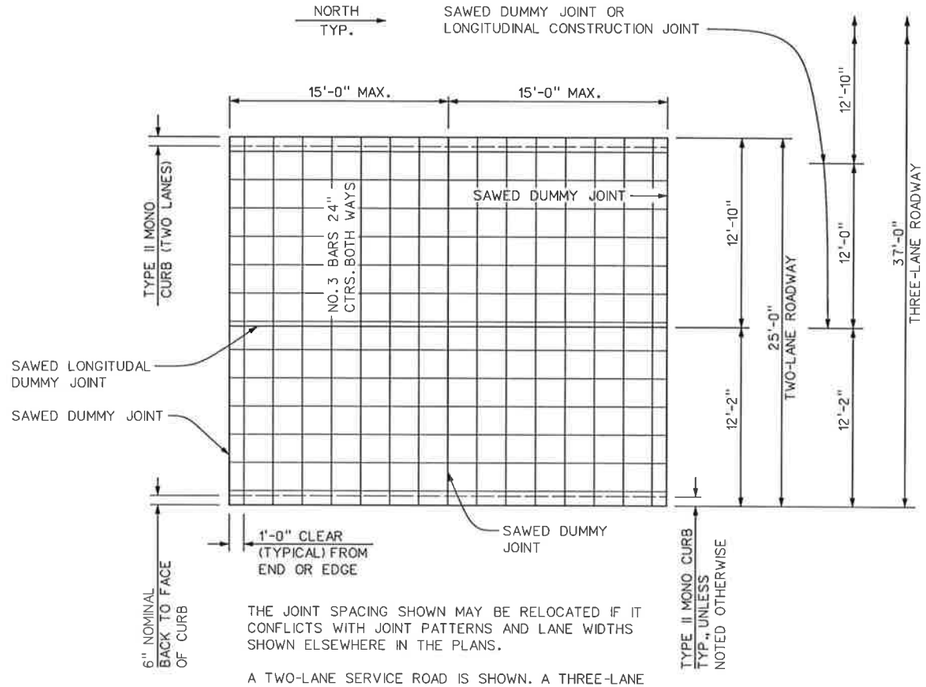

THE JOINT SPACING SHOWN MAY BE RELOCATED IF IT CONFLICTS WITH JOINT PATTERNS AND LANE WIDTHS SHOWN ELSEWHERE IN THE PLANS.

A TWO-LANE SERVICE ROAD IS SHOWN. A THREE-LANE SERVICE ROAD IS SIMILAR AS DIMENSIONED.

TYPICAL ROADWAY SLAB PLAN
8" REINF CONC PAVING

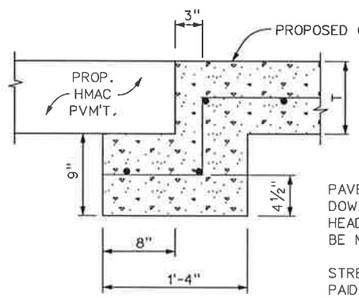

PAVEMENT BARS TO BE BENT DOWN INTO HEADER. HEADER AND PAVEMENT TO BE MONOLITHIC.

STREET HEADERS WILL NOT BE PAID FOR DIRECTLY BUT SHALL BE CONSIDERED SUBSIDIARY WORK TO "CONCRETE PAVEMENT".

ASPHALT /CONCRETE TRANSITION HEADER

"CONSTRUCTION RECORD DRAWINGS_8-01-2009

NO.	DATE	REVISION	APPROV.

DALLAS PARKWAY EXTENSION

COLLIN COUNTY

MISCELLANEOUS PAVING DETAILS

1 OF 2

Halff Associates, Inc.
ENGINEERS · ARCHITECTS · SCIENTISTS · PLANNERS · SURVEYORS

DRAWN MDB	DATE DEC 2006	DESIGNED DDS	DATE
CHECKED DDS	DATE	SCALE AS NOTED	

BOND PROJECT NO. 03-13 SHEET 112 OF 271

P-20061201

$$$TIME$$$ $$$DATE$$$ $$$$FILENAME$$$$
2:05:58 PM
i:\23000s\23819\frisco\dgn\23819cpd01.dgn

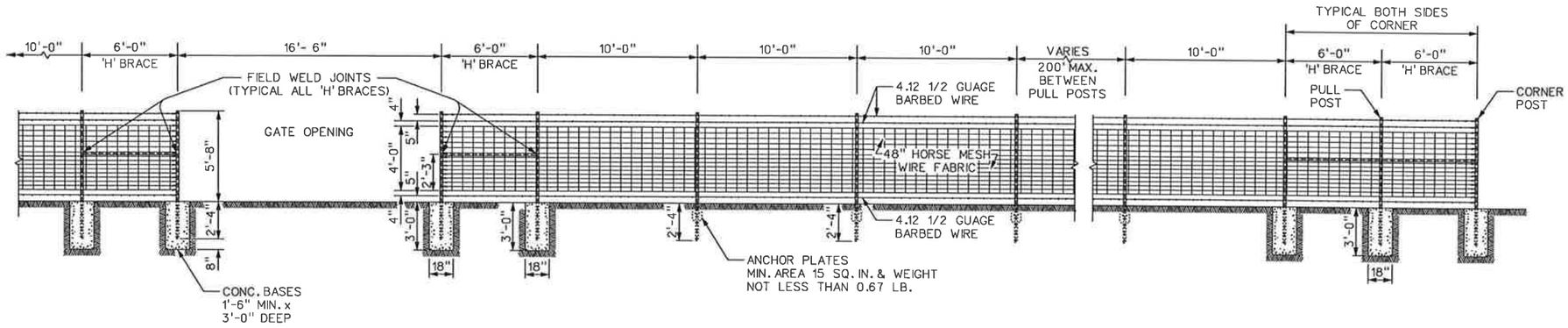

SPECIAL WOVEN WIRE FENCE WITH METAL POSTS INCLUDING BRACING DETAIL USED AT GATES

NTS

GENERAL NOTES

1. Latches for gates shall be of good commercial quality, and their design shall be of the spring fork or chain type. All latches shall be suitable to the gate and shall be approved by the Engineer.
2. Anchor plates shall be of a design and thickness sufficient to prevent turning of the post in firm soil. Metal end corner and pull post shall be 2" diameter schedule 40 galvinized steel pipe with two H braces 6 feet away from each corner. Braces shall be 1¼" diameter schedule 40 galvinized steel pipe. Fence fabric shall consist of 48" mesh horse wire with two 4.12½guage barbed wire on top and one at the bottom. Fasteners for securing barbed wire or wire mesh to metal posts shall be a minimum of 11 gauge galvanized steel wire. Tubular posts shall be fitted with water tight malleable iron caps.
3. Metal line posts shall be 8'-0" long T-posts and shall weigh not less than (1.33 lbs./lin.ft.).
4. The location of gates and corner posts will be as indicated elsewhere in these plans or as directed by the engineer.
5. See Standard Drawing WF(2)-96 for information not specifically detailed on this sheet.

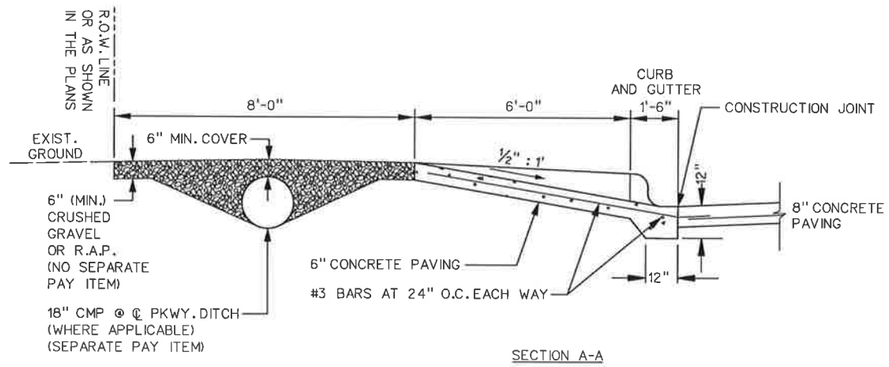

SECTION A-A

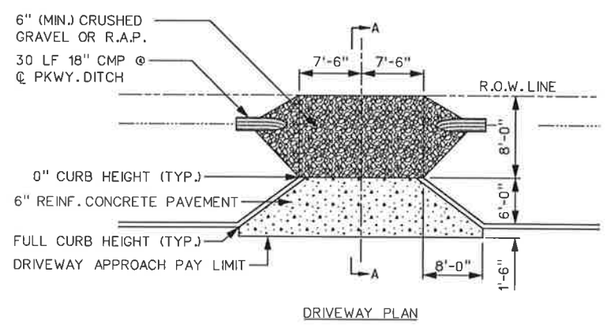

DRIVEWAY PLAN

DRIVEWAY APPROACH DETAIL

NTS

"CONSTRUCTION RECORD DRAWINGS_8-01-2009

STATE OF TEXAS
DENNIS D. SATRE
71590
REGISTERED PROFESSIONAL ENGINEER
12/28/06

NO.	DATE	REVISION	APPROV.

DALLAS PARKWAY EXTENSION

COLLIN COUNTY

MISCELLANEOUS PAVING DETAILS

2 OF 2

Halff Associates, Inc.
ENGINEERS · ARCHITECTS · SCIENTISTS · PLANNERS · SURVEYORS

DRAWN MDB DATE DEC 2006 | DESIGNED DDS DATE
CHECKED DDS DATE | SCALE AS NOTED

BOND PROJECT NO. 03-13 SHEET 113 OF 271

P-200612.01

DISCLAIMER:
The use of this standard is governed by the "Texas Engineering Practice Act". No warranty of any kind is made by TxDOT for any purpose whatsoever. TxDOT assumes no responsibility for the conversion of this standard to other formats or for incorrect results or damages resulting from its use.

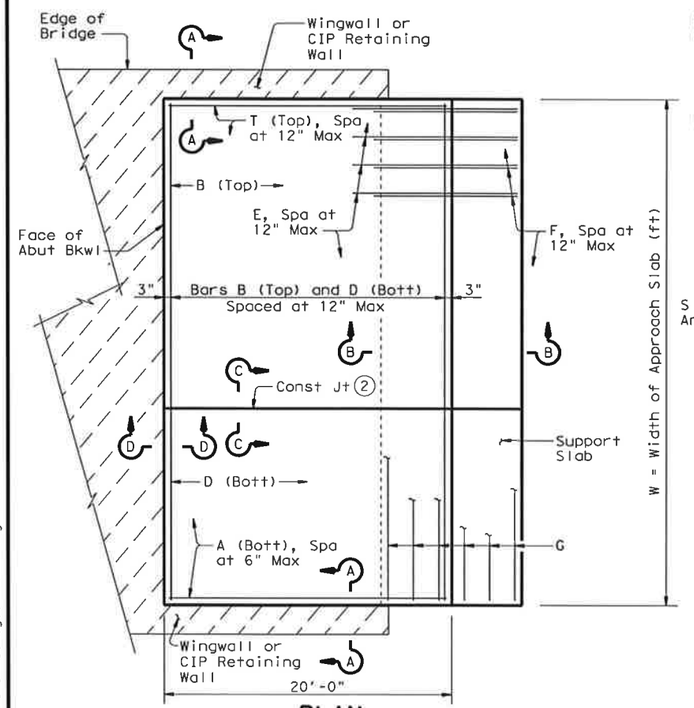

PLAN
(Showing Non-Skewed Approach Slab)

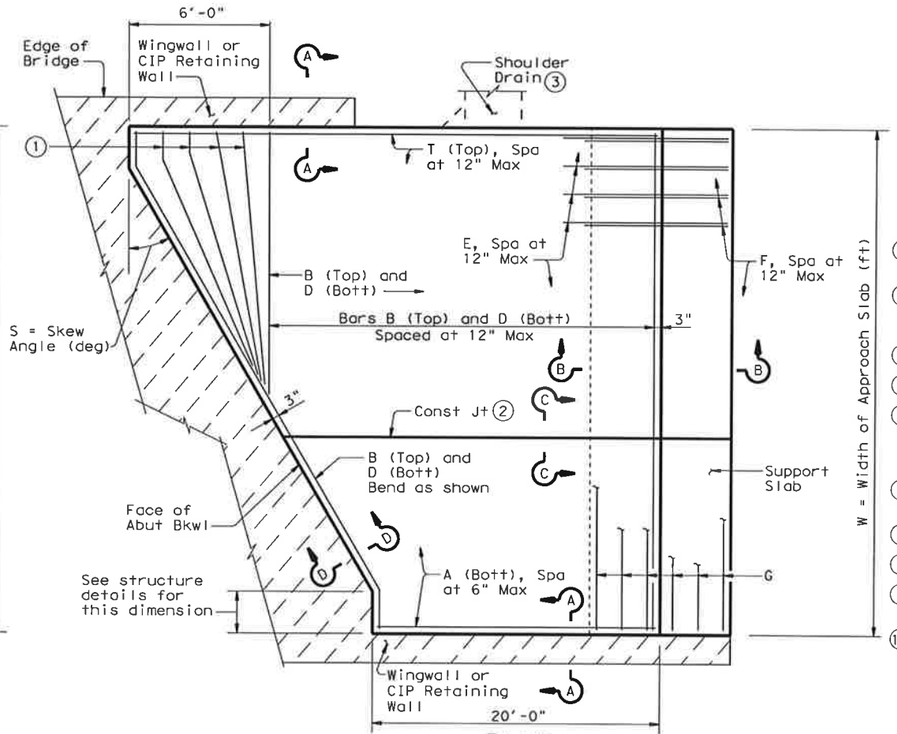

PLAN
(Showing Skewed Approach Slab)

BAR TABLE	
BAR	SIZE
A	#8
B	#5
D	#5
E	#5
F	#5
G	#5
T	#5

APPROXIMATE QUANTITIES (4)

Reinf steel weight = 8.5 Lbs/SF of Approach Slab
= 18.4 Lbs/LF of Support Slab

Area of Appr Slab = $20W + 0.5W^2 \tan S$ (SF)
(Support Slab not included)

W = Width of Approach Slab (ft)

S = Skew Angle (deg)

(1) Flare Bars B and D in this region (1'-6" Max Spa, 3" Min Spa). Minimum flared bar length = 2'-6". Bend bars as necessary.

(2) Provide longitudinal construction joints that align with longitudinal construction joints in the bridge slab with bridges built in stages. Other longitudinal construction joints must receive approval of the Engineer.

(3) See details elsewhere in plans for shoulder drain location and details.

(4) For Contractor's information only.

(5) On portion of support slab that supports the concrete pavement, adjust top surface elevation, if required, to accommodate concrete pavement thickness. Smooth trowel finish. Oil top of support slab with 60 grade oil and apply heavy coat of powdered graphite. Press down one layer of 30# roofing felt.

(6) Multiple piece tie bars are acceptable at longitudinal construction joints provided minimum laps shown are achieved.

(7) See details elsewhere in plans for required cross-slope.

(8) Place in accordance with Item 438.

(9) Backer rod shall be 25% larger than joint opening and shall be compatible with the sealant.

(10) Place ½" Preformed Bituminous Fiber Material between concrete railing and top of approach slab as shown when concrete railing projects over the approach slab.

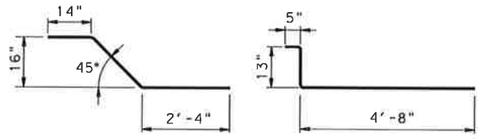

BARS E (#5) BARS F (#5)

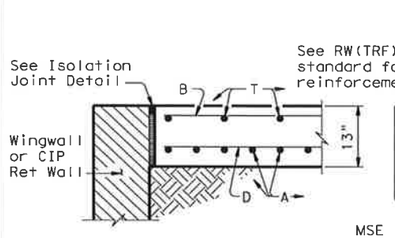

SHOWING WINGWALL OR CIP RETAINING WALL

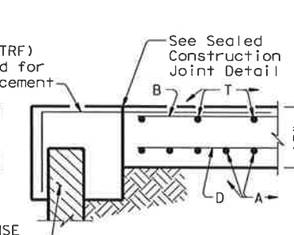

SHOWING MSE WALL

SECTION A-A

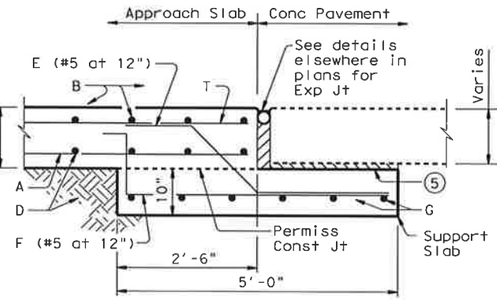

SECTION B-B

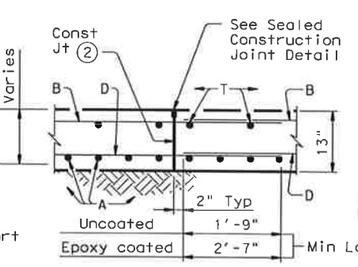

SECTION C-C (6)

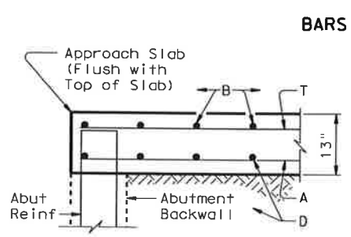

SECTION D-D

GENERAL NOTES:

Construct approach slab in accordance with Item 420.

Concrete shall be Class "S" with a minimum compressive strength of 4,000 psi.

All reinforcing steel shall be Grade 60.

Construct the subgrade or subbase from the bridge for a minimum distance of 100 feet prior to the approach slab, unless otherwise indicated on the plans.

Compact and finish the subgrade or foundation for the approach slab to the typical cross-section and to the lines and grades shown on the plans.

Cure for 4 days using water or membrane curing per Item 420.

Sealant, backer rod and preformed bituminous fiber material is subsidiary to approach slab concrete.

Provide a 1" bondbreaker (asphaltic concrete pavement or asphalt stabilized base) between the approach slab and cement stabilized backfill or cement treated base. Other bondbreakers may be used if approved by the Engineer.

"CONSTRUCTION RECORD DRAWINGS_8-01-2009

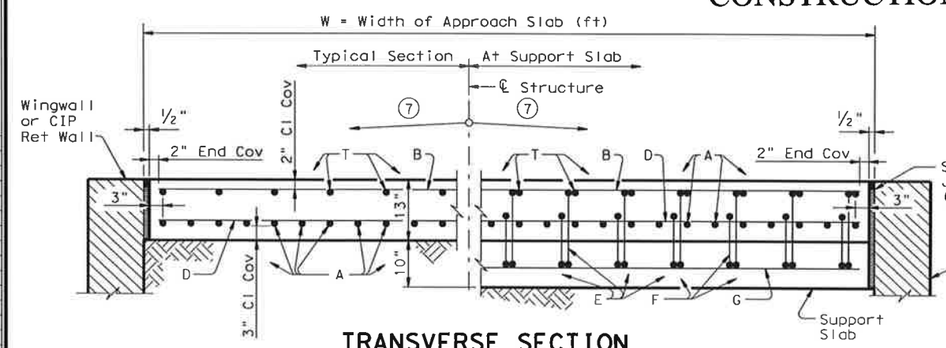

TRANSVERSE SECTION

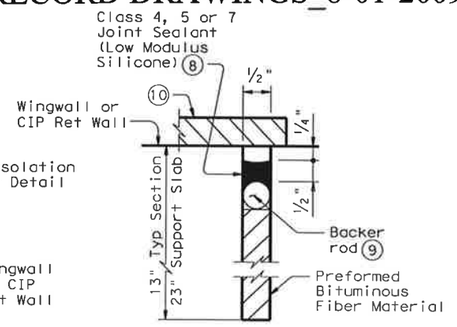

ISOLATION JOINT DETAIL

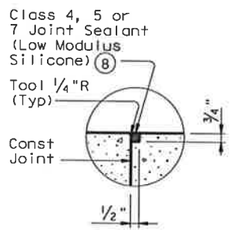

SEALED CONSTRUCTION JOINT DETAIL

Texas Department of Transportation
Bridge Division

BRIDGE APPROACH SLAB

CONCRETE PAVEMENT

BAS-C

FILE: bascstel.dgn	DN: TxDOT	CK: TxDOT	DW: TxDOT	CK: TxDOT
©TxDOT April 2006	DISTRICT	FEDERAL AID PROJECT		SHEET
REVISIONS				114
	COUNTY	CONTROL	SECT	JOB	HIGHWAY

P 200612 01

LEVELS DISPLAYED
PATH:
1

DISCLAIMER:
The use of this standard is governed by the "Texas Engineering Practice Act". No liability of any kind is assumed by TxDOT for any unauthorized use. TxDOT disclaims responsibility for this standard when converted to other formats or for incorrect results or damages resulting from its use.

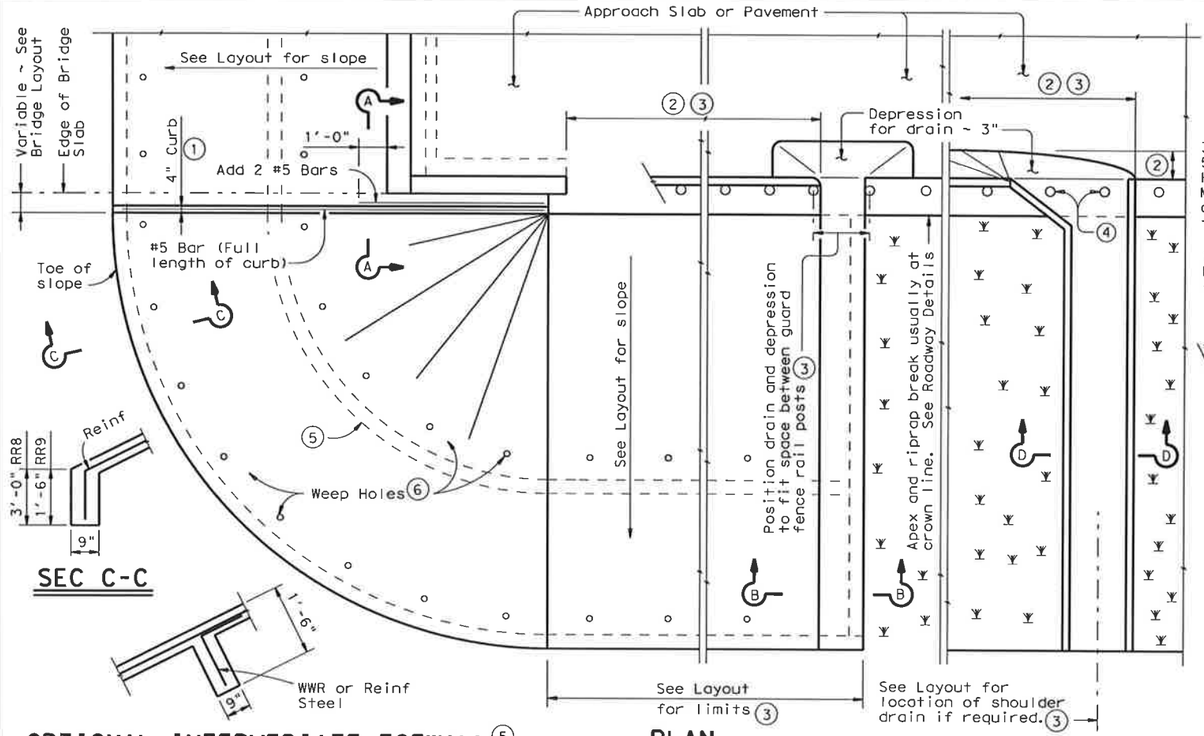

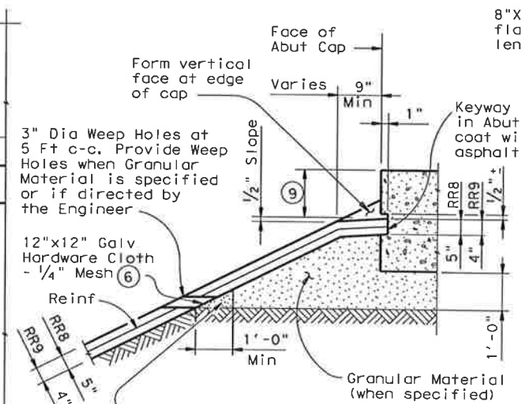

SHOWING KEYWAY OPTION

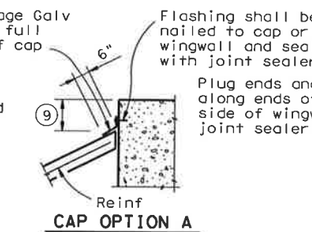

CAP OPTION A

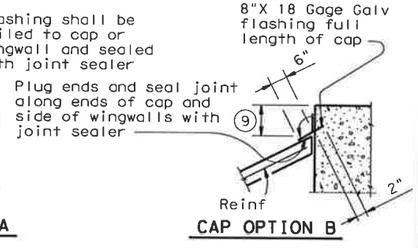

CAP OPTION B

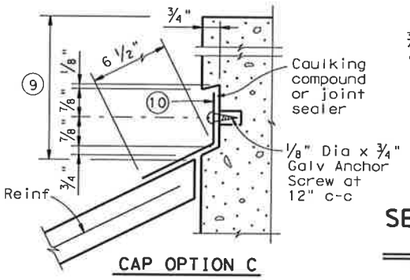

CAP OPTION C

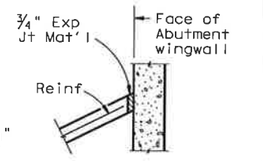

SECT THRU RIPRAP AT WINGWALL 12

SECTIONS THRU RIPRAP AT CAP 11

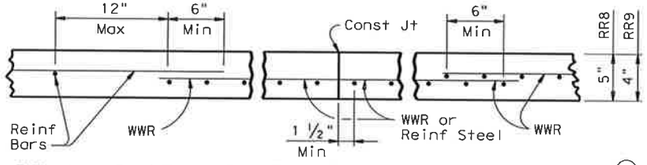

DETAILS OF WWR, REINF AND CONST JOINT 13

(1) When riprap is shown extended around header on layout, extend slab and toewall as shown and eliminate 4" curb.

(2) Limits and configuration of drains and depressions shall be as shown elsewhere in plans or as directed by the Engineer.

(3) Location of shoulder drain must consider limitations imposed by rail transition. Do not locate shoulder drains at expansion joints between approach slab and concrete pavement.

(4) See details elsewhere in plans for installation of guard fence posts through concrete riprap.

(5) The optional intermediate toewall shall be constructed when designated elsewhere in the plans or included in the specifications.

(6) If erodible soils occur in the embankment

(7) Wider or other drain configurations shall be used if shown elsewhere in plans or if directed by the Engineer.

(8) Wall extension may be reduced or modified if approved by the Engineer. Wall extension shall be increased to 1'-6" whenever the optional intermediate toewall is called for in the plans.

(9) Top of cap to top of riprap dimension varies as directed by the Engineer. Should be 9" Min for beam/slab type bridges and 1'-6" for slab span, box beam, or slab beam bridges.

(10) 8" x 18 Gage Galv Sheet Metal

(11) The sealing option of the joint between the face of cap and riprap shall be as designated by the Engineer or as shown elsewhere on plans.

(12) Flashing (shown in Cap Option A) may be used at wingwall in addition to Exp Jt Mat'l if shown on plans or directed by the Engineer.

(13) Reinforcing bars shall be #3 at 18" Spa c-c. Welded Wire Reinforcement (WWR) shall be 6X6-W2.9XW2.9. Combinations of WWR and reinforcing bars may be used if both are permitted. Lap splices shall be a minimum of 6 inches, measured from the transverse wire of WWR, and the ends of reinforcing bars.

FOR CONTRACTOR'S INFORMATION ONLY:
5" of RR8 = 0.015 CY/SF
4" of RR9 = 0.012 CY/SF
#3 Reinf at 18" c-c = 0.501 Lbs/SF
6X6-W2.9XW2.9 = 0.394 Lbs/SF

GENERAL NOTES:

Concrete shall be Class "B" with a minimum compressive strength of 2,000 psi unless noted elsewhere in plans.

All reinforcing steel shall be Grade 60.

Reinforcing other than that shown may be used by substituting reinforcement of equal or greater unit cross-sectional area. The maximum reinforcement spacing shall be 18 inches.

Construction joints or grooved joints extending the full slant slope height shall be at intervals of approximately 20 feet unless otherwise directed by the Engineer.

Hardware cloth, loose graded stone behind weep holes, flashing, or other sealing material shall not be paid for directly but shall be subsidiary to the bid item "Riprap".

Unless specified elsewhere in the plans to be only reinforcing bars, the riprap reinforcing may be composed of reinforcing bars, Welded Wire Reinforcement (WWR), or any suitable combination of both types.

See Layout for limits of riprap.

RR8 is to be used on stream crossings.

RR9 is to be used on other embankments.

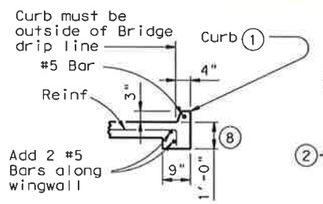

SEC A-A

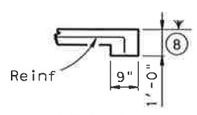

SEC B-B
(No Drain)

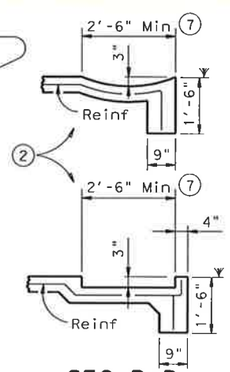

SEC B-B
(Shoulder Drain integral with riprap)

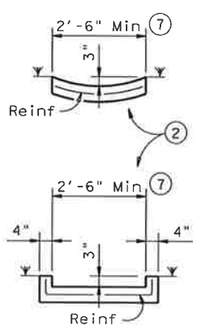

SEC D-D
(Shoulder Drain)

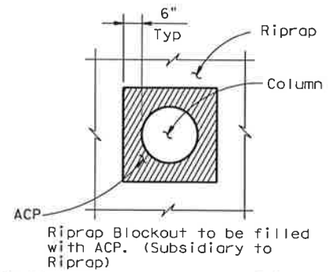

RIPRAP DETAIL AT COLUMNS
(As directed by the Engineer)

"CONSTRUCTION RECORD DRAWINGS_8-01-2009

Texas Department of Transportation
Bridge Division

CONCRETE RIPRAP AND SHOULDER DRAINS EMBANKMENTS AT BRIDGE ENDS (TYPES RR8 & RR9)

CRR

FILE: crrstdel.dgn	DN: TxDOT	CK: TxDOT	DW: TxDOT	CK: TxDOT
©TxDOT April 2006	DISTRICT	FEDERAL AID PROJECT		SHEET
REVISIONS				115
	COUNTY	CONTROL	SECT	JOB	HIGHWAY

P-200612-01

PATH:
LEVELS DISPLAYED
1

DISCLAIMER:
The use of this standard is governed by the "Texas Engineering Practice Act". No warranty of any kind is made by TxDOT for any purpose whatsoever. TxDOT assumes no responsibility for the conversion of this standard to other formats or for incorrect results or damages resulting from its use.

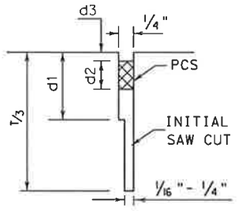

SAWED
LONGITUDINAL JOINT

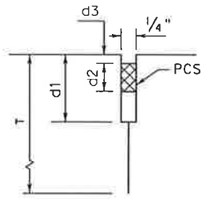

LONGITUDINAL
CONSTRUCTION JOINT

LONGITUDINAL JOINT SEALS

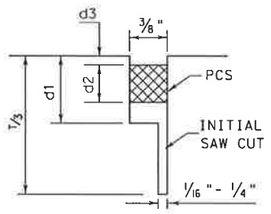

SAWED
CONTRACTION JOINT

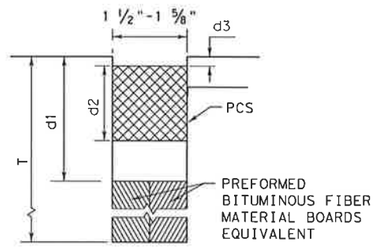

FORMED
FORMED EXPANSION JOINT

TRANSVERSE JOINT SEALS

METHOD A: PREFORMED COMPRESSION SEALS (PCS)
(CLASS 6 PREFORMED JOINT SEALANT)

GENERAL NOTES FOR METHOD "A"

1. UNLESS OTHERWISE SHOWN IN THE PLANS, EITHER METHOD "A" OR METHOD "B" MAY BE USED.
2. THE LOCATION OF JOINTS SHALL BE AS SHOWN ELSEWHERE IN THE PLANS.
3. DIMENSIONS d1, d2, AND d3 SHALL BE IN ACCORDANCE WITH THE PREFORMED COMPRESSION SEAL MANUFACTURES RECOMMENDATION.
4. THE JOINT RESERVOIR FOR SEALANT SHALL BE SAWED UNLESS OTHERWISE SHOWN ON THE PLANS FOR THE LONGITUDINAL AND TRANSVERSE CONSTRUCTION AND THE TWO SAWED JOINTS.
5. THE JOINTS SHALL BE CLEANED IN ACCORDANCE WITH THE ITEM 438 AND PRIOR TO BEGINNING OPERATIONS, THE CONTRACTOR SHALL SUBMIT A STATEMENT FROM THE SEALANT MANUFACTURER SHOWING THE RECOMMENDED EQUIPMENT AND INSTALLATION PROCEDURES TO BE USED.
6. THE SAW CUT FOR THE LONGITUDINAL JOINT SHALL BE ONE FOURTH THE SLAB THICKNESS WHEN CRUSHED LIMESTONE IS USED AS THE COARSE AGGREGATE.

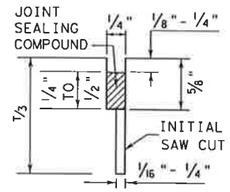

SAWED
LONGITUDINAL JOINT

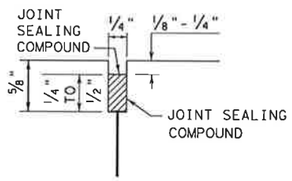

LONGITUDINAL OR TRANSVERSE
CONSTRUCTION JOINT

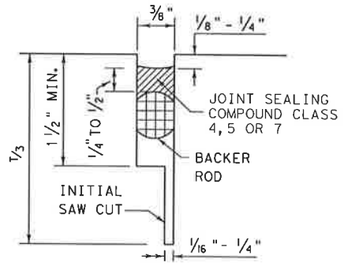

TRANSVERSE SAWED
CONTRACTION JOINT

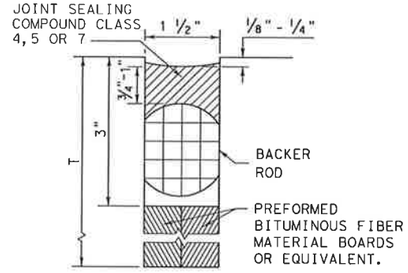

TRANSVERSE FORMED
EXPANSION JOINT

METHOD B: JOINT SEALING COMPOUND

GENERAL NOTES FOR METHOD "B"

1. UNLESS OTHERWISE SHOWN IN THE PLANS, EITHER METHOD "A" OR METHOD "B" MAY BE USED.
2. THE LOCATION OF JOINTS SHALL BE AS SHOWN ELSEWHERE IN THE PLANS.
3. THE ENGINEER SHALL SELECT A TARGET PLACEMENT THICKNESS FOR THE SEALANT DETAILS WHICH SHOW RANGES IN THICKNESS. THE TARGET THICKNESS WILL NORMALLY BE THE MIDPOINT OF THE RANGE.
4. THE JOINT RESERVOIR FOR SEALANT SHALL BE SAWED UNLESS OTHERWISE SHOWN ON THE PLANS FOR THE LONGITUDINAL AND TRANSVERSE CONSTRUCTION AND THE TWO SAWED JOINTS.
5. THE JOINTS SHALL BE CLEANED IN ACCORDANCE WITH THE ITEM 438 AND PRIOR TO BEGINNING OPERATIONS, THE CONTRACTOR SHALL SUBMIT A STATEMENT FROM THE SEALANT MANUFACTURER SHOWING THE RECOMMENDED EQUIPMENT AND INSTALLATION PROCEDURES TO BE USED.
6. THE SAW CUT FOR THE LONGITUDINAL JOINT SHALL BE ONE FOURTH THE SLAB THICKNESS WHEN CRUSHED LIMESTONE IS USED AS THE COARSE AGGREGATE.

"CONSTRUCTION RECORD DRAWINGS_8-01-2009

Texas Department of Transportation
Construction Division (Pavement)

CONCRETE PAVING DETAILS
JOINT SEALS

JS-94

©TxDOT SEPTEMBER 1994	DW: LJB	CK: LJB	DW: BGD	CK: GLG	
MODIFICATIONS	DISTRICT	FEDERAL AID PROJECT			SHEET
					116
	COUNTY	CONTROL	SECTION	JOB	HIGHWAY

P-200612-01

LEVELS DISPLAYED

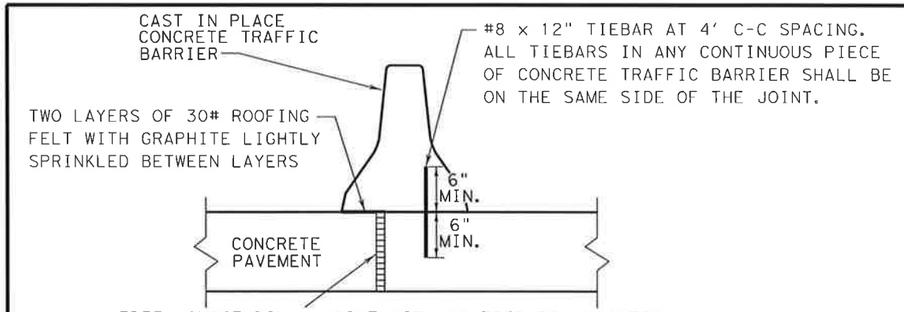

FREE LONGITUDINAL JOINT DETAIL

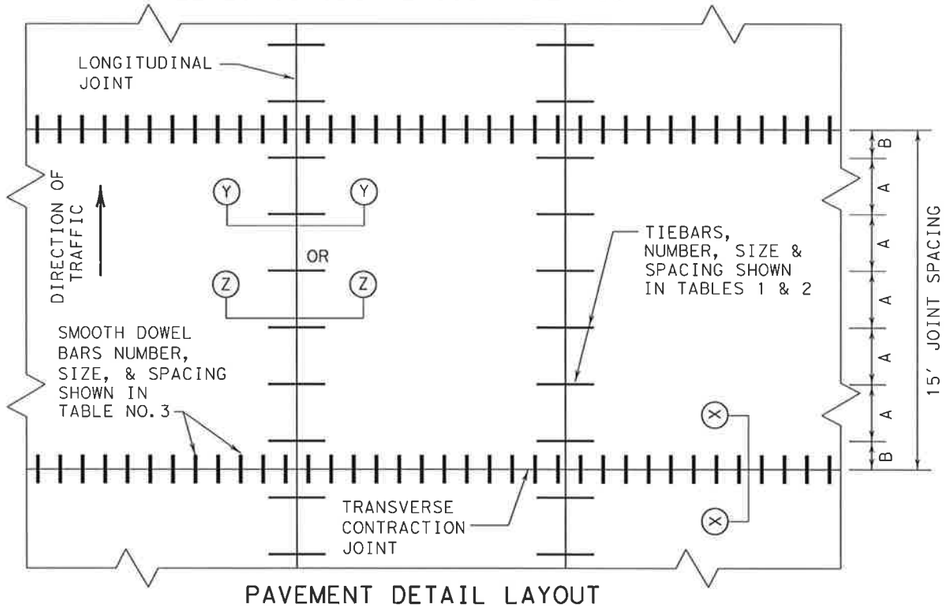

PAVEMENT DETAIL LAYOUT

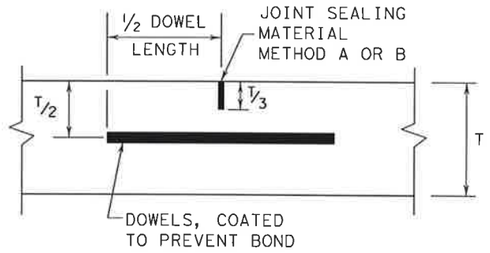

TRANSVERSE CONTRACTION JOINT
SECTION X-X

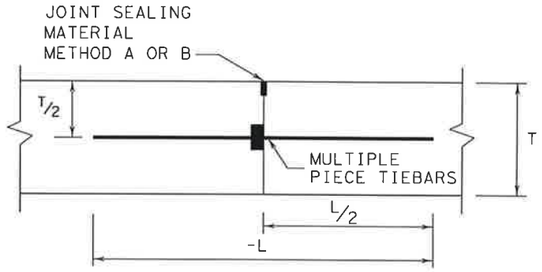

LONGITUDINAL CONSTRUCTION JOINT
SECTION Y-Y

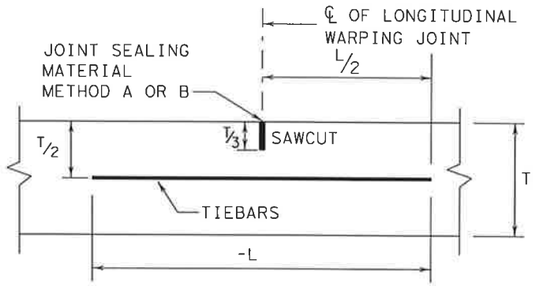

LONGITUDINAL WARPING JOINT
SECTION Z-Z

GENERAL NOTES

1. CONCRETE SLABS WIDER THAN 100' WITHOUT A FREE JOINT, ARE NOT COVERED BY THIS STANDARD.
2. FOR FURTHER INFORMATION REGARDING THE PLACEMENT OF CONCRETE AND LOAD TRANSFER DEVICES REFER TO THE GOVERNING SPECIFICATIONS FOR "CONCRETE PAVEMENT" AND "REINFORCING STEEL."
3. DETAILS FOR PAVEMENT WIDTH, PAVEMENT THICKNESS, AND CROWN CROSS SLOPE SHALL BE AS SHOWN ELSEWHERE IN THE PLANS.
4. THE DETAIL FOR THE JOINT SEALANT AND RESERVOIR WILL BE SHOWN IN CONCRETE PAVEMENT DETAIL, JOINT SEALANT STANDARD (JS-94).
5. PAVEMENT WIDTHS IN EXCESS OF 16' SHALL BE PROVIDED WITH A LONGITUDINAL JOINT (SECTION Z-Z OR Y-Y). THESE JOINTS SHALL BE LOCATED WITHIN 6" OF THE LANE LINES UNLESS SHOWN ELSEWHERE ON THE PLANS.
6. THE JOINT BETWEEN OUTSIDE LANE AND SHOULDER SHALL BE A LONGITUDINAL WARPING JOINT (SECTION Z-Z) UNLESS OTHERWISE SHOWN IN THE PLANS.
7. THE SPACING BETWEEN TRANSVERSE JOINTS SHALL BE 15 FEET UNLESS OTHERWISE SHOWN IN THE PLANS.
8. WHERE A MONOLITHIC CURB IS SPECIFIED, THE JOINT IN THE CURB SHALL COINCIDE WITH PAVEMENT JOINTS AND MAY BE FORMED BY ANY MEANS APPROVED BY THE ENGINEER.
9. TRANSVERSE CONSTRUCTION JOINTS MAY BE FORMED BY USE OF METAL OR WOOD FORMS EQUAL IN DEPTH TO THE NOMINAL DEPTH OF THE PAVEMENT, OR BY METHODS APPROVED BY THE ENGINEER.
10. THE ENGINEER WILL ADJUST THE REQUIRED NUMBER OF TIEBARS FOR SLABS SHORTER OR LONGER THAN 15'. SPACING "B" WILL BE ADJUSTED TO MAINTAIN A MINIMUM CLEARANCE OF 2" BETWEEN THE TIEBAR AND THE DOWEL BARS AT THE TRANSVERSE JOINT AND THE "A" SPACING WILL REMAIN AS REQUIRED FOR THE PAVEMENT SLAB WIDTH.
11. MULTIPLE PIECE TIEBARS SHALL BE USED AT LONGITUDINAL CONSTRUCTION JOINTS UNLESS OTHERWISE SPECIFIED IN THE PLANS.
12. THE SAW CUT FOR LONGITUDINAL WARPING AND THE TRANSVERSE CONSTRUCTION JOINTS MAY BE ONE FOURTH THE SLAB THICKNESS WHEN CRUSHED LIMESTONE IS USED AS THE COARSE AGGREGATE.

TABLE NO. 1 TIEBARS REQUIRED FOR LONGITUDINAL JOINT JOINTS FOR EACH 15' SLAB

ASTM A-616 OR A-615 (GRADE 60) STRAIGHT OR MULIPLE PIECE REINFORCING TIEBARS		CONCRETE SLAB THICKNESS	DISTANCE FROM THE LONGITUDINAL JOINT TO THE NEAREST LONGITUDINAL FREE EDGE			
			< OR =16'	< OR =24'	< OR =34'	< OR =50'
BAR LENGTH, "L" INCHES	BAR SIZE	"T" INCHES	REQUIRED NO. OF BARS	REQUIRED NO. OF BARS	REQUIRED NO. OF BARS	REQUIRED NO. OF BARS
42	#5 (5/8")	8	5	5	6	9
		9	5	5	7	10
		10	5	5	7	11
		11	5	6	8	12
		12	5	6	9	13
		13	5	7	9	13
		14	6	7	10	NA
		15	6	8	11	NA
50	#6 (3/4")	8	5	5	5	6
		9	5	5	5	7
		10	5	5	5	8
		11	5	5	6	8
		12	5	5	6	9
		13	5	5	7	10
		14	5	5	7	10
		15	5	6	8	11

THE DISTANCE TO THE FREE EDGE WILL BE DETERMINED BY THE ENGINEER AND THE DISTANCE WILL BE BASED ON THE NOMINAL WIDTHS OF THE LANES AND SHOULDERS PLUS ANY TIED RAMPS OR CONNECTING ROADWAYS.

TABLE NO. 2 TIEBAR SPACINGS

SPACING REQUIREMENT FOR 15'SLAB FOR REQUIRED NUMBER OF BARS		
REQUIRED NO. OF BARS	REGUALR SPACING "A" INCHES	FIRST AT JOINT "B" INCHES
5	36	18
6	30	15
7	25	15
8	21	16.5
9	18	18
10	16	18
11	15	15
12	13	18.5
13	12	18

TABLE NO. 3 DOWELS REQUIEMENTS

T, IN.	DOWELS (SMOOTH BARS)	
	SIZE AND LENGTH	AVERAGE SPACING (INCHES)
8	1" X 18"	12
9	1 1/8" X 18"	12
10	1 1/4" X 18"	12
11	1 3/8" X 18"	12
12	1 1/2" X 18"	12
13	1 5/8" X 18"	12
14	1 3/4" X 18"	12
15	1 7/8" X 18"	12

DISCLAIMER:
The use of this standard is governed by the "Texas Engineering Practice Act". No warranty of any kind is made by TxDOT for any purpose whatsoever. TxDOT assumes no responsibility for the conversion of this standard to other formats or for incorrect results or damages resulting from its use.

LEVELS DISPLAYED

Texas Department of Transportation
Construction Division (Pavements)

CONCRETE PAVEMENT DETAILS
CONTRACTION DESIGN
T-8 THRUGH 15 INCHES
CPCD-94

©TxDOT SEPTEMBER 1994

DN: LJB	CK: LJB	DW: BGD	CK: GLG	
MODIFICATIONS	DISTRICT	FEDERAL AID PROJECT		SHEET 117
	COUNTY	CONTROL	SECTION	JOB / HIGHWAY

"CONSTRUCTION RECORD DRAWINGS_8-01-2009

P-200612-01

DISCLAIMER:
The use of this standard is governed by the "Texas Engineering Practice Act". No warranty of any kind is made by TxDOT for any purpose whatsoever. TxDOT assumes no responsibility for the conversion of this standard to other formats or for incorrect results or damages resulting from its use.

LEVELS DISPLAYED

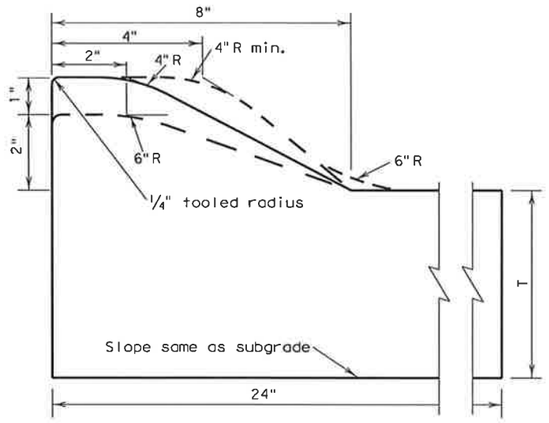

TYPE I CURB AND GUTTER

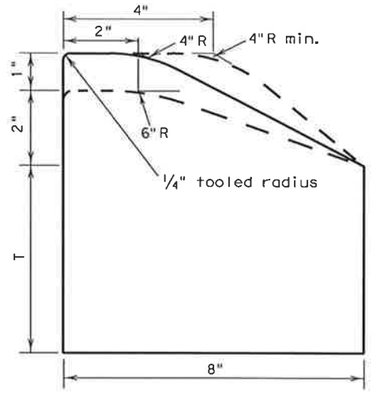

TYPE I CURB

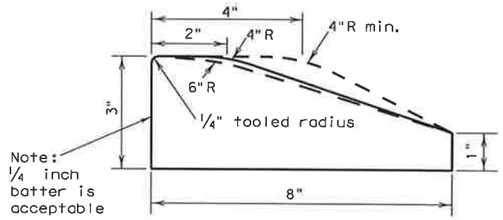

TYPE I MONO CURB OR
CURB PLACED ON PAVEMENT

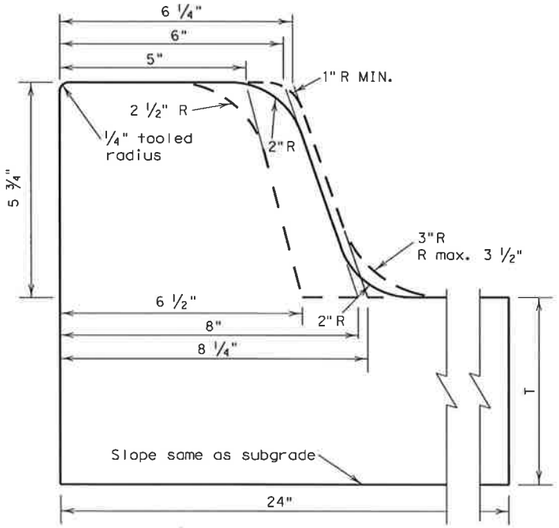

TYPE II CURB AND GUTTER

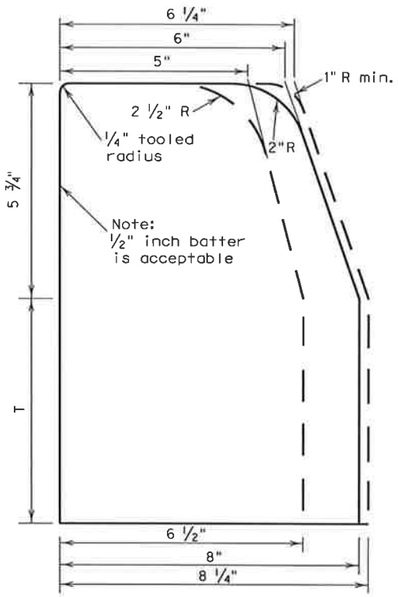

TYPE II CURB

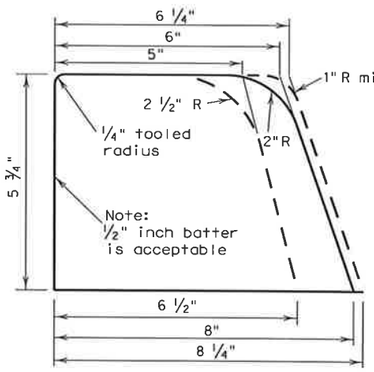

TYPE II MONO CURB OR
CURB PLACED ON PAVEMENT

GENERAL NOTES

1. Contractor may use existing forms if the cross section lies within the band shown by dotted lines. If new forms are to be purchased, leased, or constructed they shall conform to the solid line.
2. When reinforcing steel is required or placed at contractor's option, one of the following schemes of reinforcement shall be required. The manner of placement and location shall be to the satisfaction of the Engineer.
   a. Type I, or Type II, curb and gutter reinforcement shall have longitudinal reinforcing bars as follows: Three #3, two #4, two #5, or one #6.
   b. All types of curb (reinf.) shall have one #3 or #4 bar for for longitudinal reinforcement.
3. Reinforcing bars shall be lapped a minimum of 15".
4. When curb or curb and gutter is placed by a separate pour adjacent to or atop concrete pavement, curb or curb and gutter shall be tied to pavement in a manner satisfactory to the engineer with 8-inch long #3 or #4 bars spaced at 5 feet and expansion and/or contraction joints of curb or curb and gutter shall match those of pavement.

   When curb and curb and gutter is not constructed adjacent to concrete pavement, the following shall govern:
   a. Reinforced curb or curb and gutter shall have no contraction joints.
   b. Non-reinforced curb or curb and gutter shall have formed, tooled or sawed contraction joints at 10'±. The depth of these joints shall be sufficient to ensure cracking at the joints.
   c. Reinforcing curb or curb and gutter shall have expansion joints at points of curvature and at intervals no greater than 120' in all curves and at structures such as bridges, box culverts, curb inlets, etc.
   d. Non-reinforced curb or curb and gutter shall have expansion joints at points of curvature on curves of radius less than 25' and at structures such as bridges, box culverts, curb inlets, etc.
5. One-half inch expansion joint material shall be provided where curb or curb gutter is adjacent to sidewalk or riprap.
6. Unless otherwise shown, transitions between curbs or curbs and gutters of differing cross section shall be accomplished over a 20 foot length or as approved by the Engineer.
7. At contractor's option, dimension "T" may be thickness of pavement structure. In no case shall it be less than 6".
8. See the RAMP standard sheet for information on curb ramps and sidewalks crossing driveways.

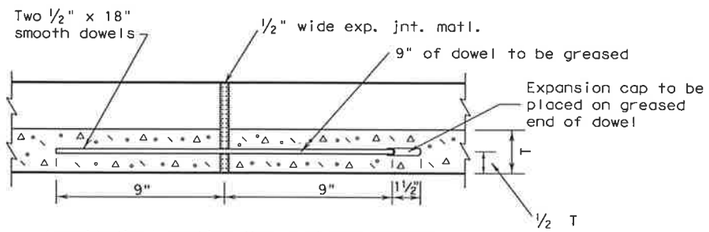

Longitudinal section thru curb and gutter showing typical expansion joint details.

Reinforcing steel (when used) shall not cross expansion joints. Steel shall be terminated 3" ± 1" from face of the joint.

"CONSTRUCTION RECORD DRAWINGS_8-01-2009

Texas Department of Transportation
Design Division (Roadway)

CONCRETE CURB AND CURB AND GUTTER

CCCG-01

FILE: cccg01.DGN	DN: MAM	CK: RAR	DW: RAR	CK: MAM	
©TxDOT 1995	DIST	FEDERAL AID PROJECT			SHEET
REVISIONS					118
	COUNTY		CONTROL	SECT	JOB	HIGHWAY

P-200612-01

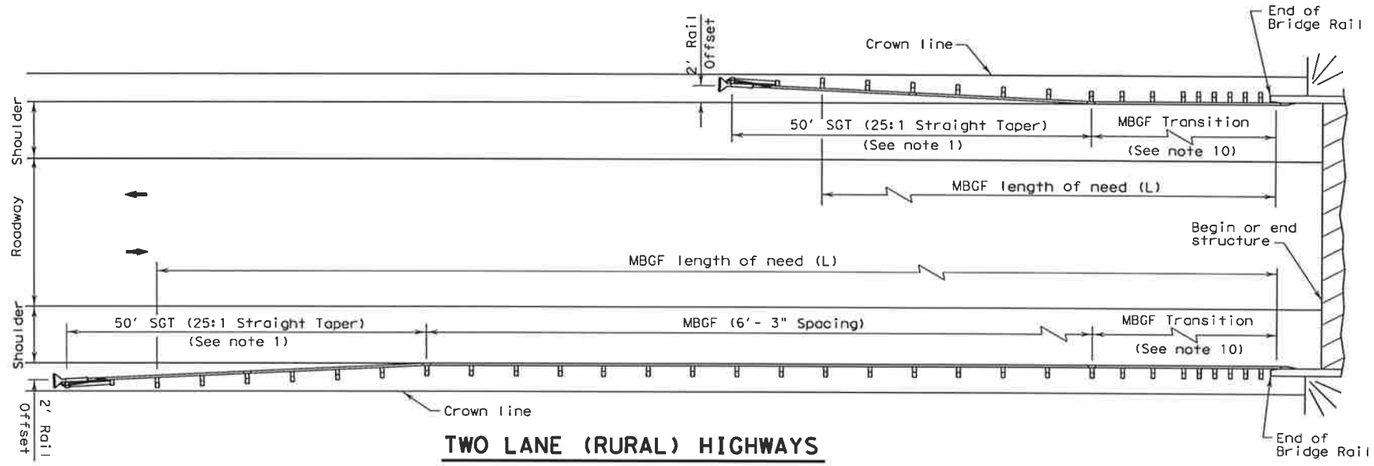

TWO LANE (RURAL) HIGHWAYS

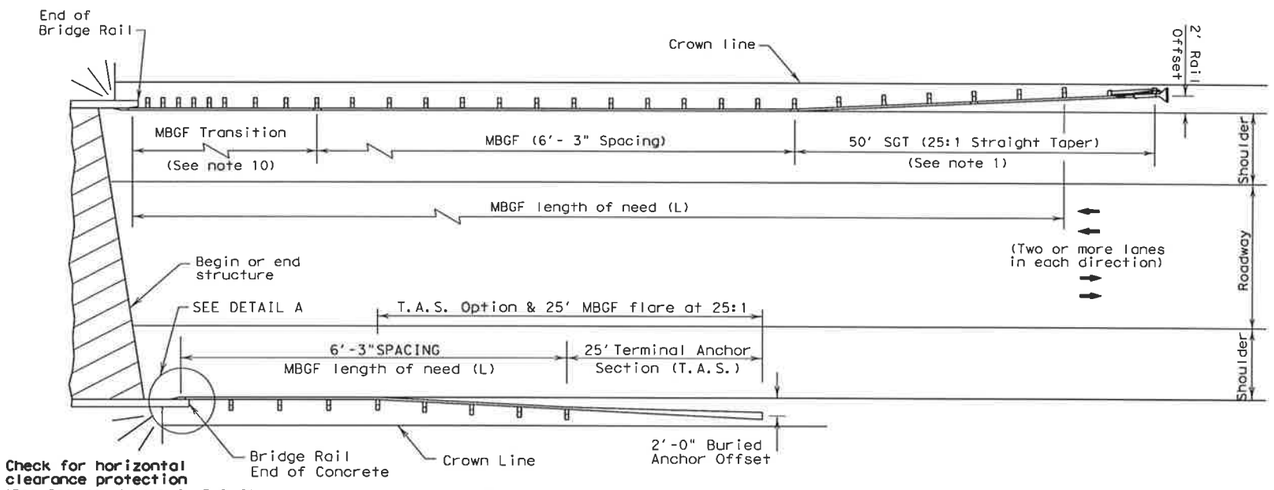

Check for horizontal clearance protection (See General Notes 4, 5 & 6)

MULTILANE UNDIVIDED (RURAL) HIGHWAYS

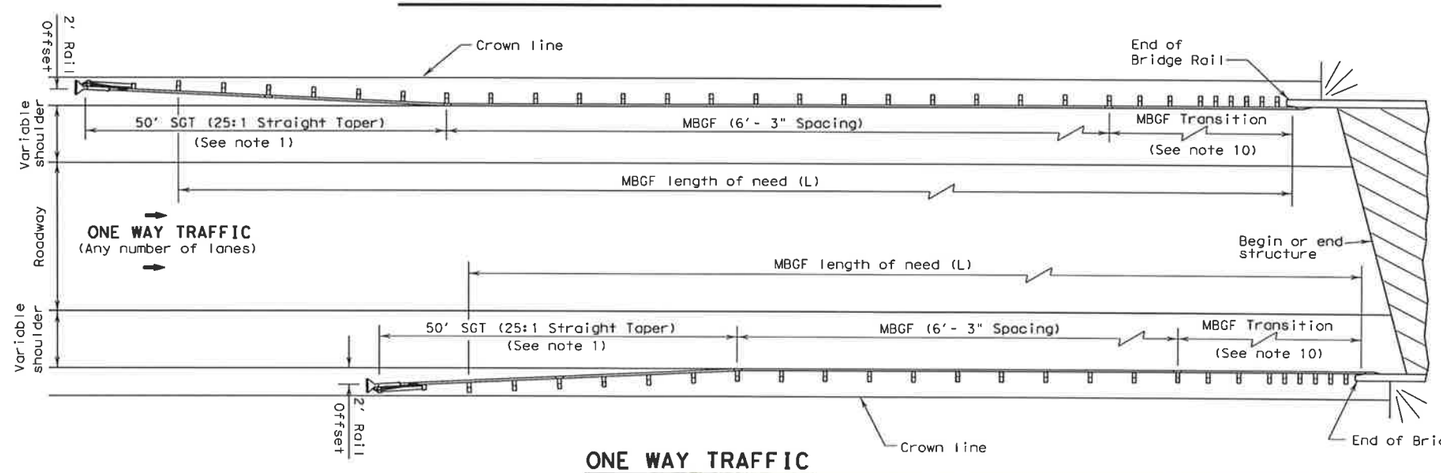

ONE WAY TRAFFIC

GENERAL NOTES

1. For more detail: See MBGF, SGT, and MBGF transition standard sheets.
2. Quantities of metal beam guard fence (MBGF) at individual bridge ends are shown elsewhere in plans.
3. Use average daily traffic (ADT) for the current year to determine MBGF length of need in accordance with the Roadway Design Manual unless otherwise specified. Where significant traffic volume growth is anticipated on low volume (0-750 ADT) highways, use length determinations for the higher volume category.
4. MBGF may not be required to shield departure end of bridge unless other obstacles within the horizontal clearance limits or opposing traffic indicate a MBGF consideration.
5. Terminal anchor sections (T.A.S) are only for downstream end anchorage usage outside the horizontal clearance area of opposing traffic.
6. Direct connection of MBGF (at 6'-3" post spacing without transition) to concrete rail is only for downstream rail connections outside the horizontal clearance area of opposing traffic.
7. The crown will be widened to accommodate MBGF. Typically the crown line should be 2'- 0" from the back of the MBGF post. This applies to new construction on new alignment or where existing roadway cross section is to be widened to increase roadway width. This does not apply to rehabilitation work where existing roadway crown width is to be retained (See Typical Cross Section at MBGF).
8. For restrictive width bridges, a 25' tangent section of MBGF should connect to the wingwall. The adjoining MBGF that lies within the roadway (Lanes & Shoulder area) crown should be flared at the rate of 25:1 (Longitudinal : Lateral). Length at these bridges should be determined as stated above or the length necessary to locate the terminal end at a 2'- 0" offset from shoulder edge, whichever is greater.
9. Variations in post spacings and/or the use of spacer blocks or shims may be required by the Engineer in order to accommodate the required rail connection to existing structures.
10. Transition length and post spacing will vary depending on the transition type. Transition type will be shown elsewhere in the plans.

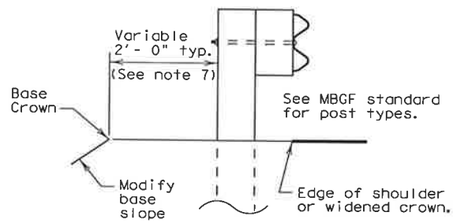

TYPICAL CROSS SECTION AT MBGF

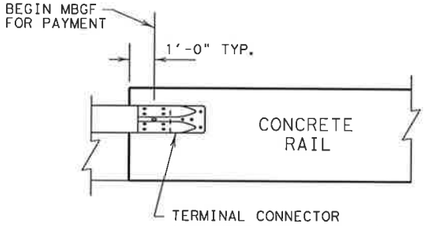

DETAIL A

DISCLAIMER:
The use of this standard is governed by the "Texas Engineering Practice Act". No warranty of any kind is made by TxDOT for any purpose whatsoever. TxDOT assumes no responsibility for the conversion of this standard to other formats or for incorrect results or damages resulting from its use.

LEVELS DISPLAYED

Texas Department of Transportation
Design Division (Roadway)

BRIDGE END DETAILS

BED-03

FILE: bed03.dgn	DN: RM	CK: RM	DW: CL	CK: RM	
©TxDOT SEPTEMBER 1991	DIST	FEDERAL AID PROJECT			SHEET
REVISIONS					119
	COUNTY	CONTROL	SECT	JOB	HIGHWAY

"CONSTRUCTION RECORD DRAWINGS_8-01-2009

P-200612-01

DISCLAIMER:
The use of this standard is governed by the "Texas Engineering Practice Act". No warranty of any purpose whatsoever. TxDOT assumes no responsibility for the conversion of this standard to other formats or for incorrect results or damages resulting from its use.

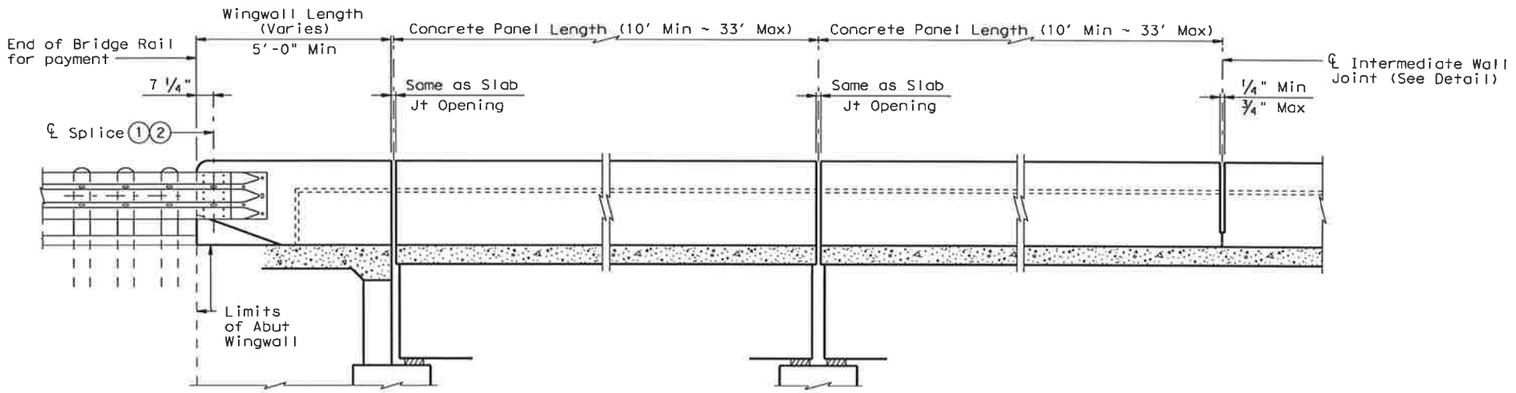

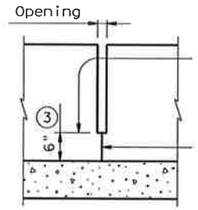

INTERMEDIATE WALL JOINT DETAIL

Note: Provide intermediate wall joints over all slab construction joints, over interior supports on continuous units, and at equal intervals in between as necessary to maintain a 33' maximum length of unbroken wall.

AT ABUTMENT BENTS
Showing TL-3 Transition

AT SLAB EXP JOINTS

ROADWAY ELEVATION OF RAIL

AT INTERMEDIATE WALL JOINTS

℄ 4 ~ 7/8" Dia A325 Hex Head Bolts with two 1 3/4" O.D. washers. Place washer under each head and nut. The 4 Terminal Connection Bolts shall be tightened in a well distributed pattern so to prevent damage or distortion of the W-Beam Connection and the MBGF Transition. Bolts shall be cut off after installation so as to extend no more than 3/4" beyond nut. End of cut-off bolt shall be painted with Zinc-rich paint. (2)

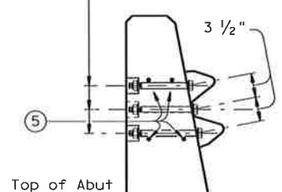

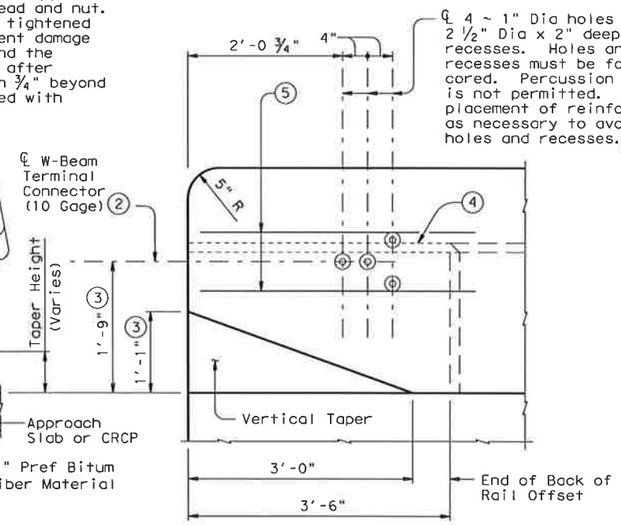

SECTION ELEVATION

TL-2 TERMINAL CONNECTION DETAILS

℄ 5 ~ 7/8" Dia A325 Hex Head Bolts with two 1 3/4" O.D. washers. Place washer under each head and nut. The 5 Terminal Connection Bolts shall be tightened in a well distributed pattern so to prevent damage or distortion of the Thrie-Beam Connection and the MBGF Transition. Bolts shall be cut off after installation so as to extend no more than 3/4" beyond nut. End of cut-off bolt shall be painted with Zinc-rich paint. (2)

℄ 5 ~ 1" Dia holes and 2 1/2" Dia x 2" deep recesses. Holes and recesses must be formed or cored. Percussion drilling is not permitted. Adjust placement of reinforcing steel as necessary to avoid bolt holes and recesses. (6)

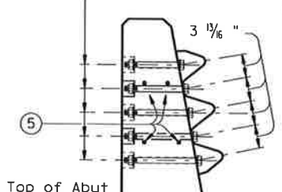

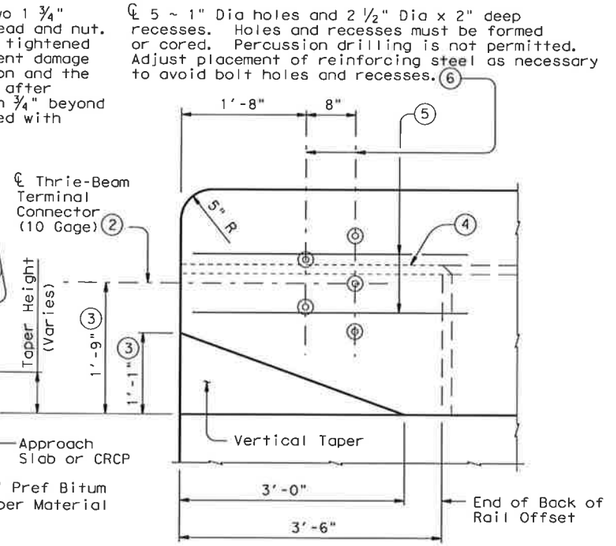

SECTION ELEVATION

TL-3 TERMINAL CONNECTION DETAILS

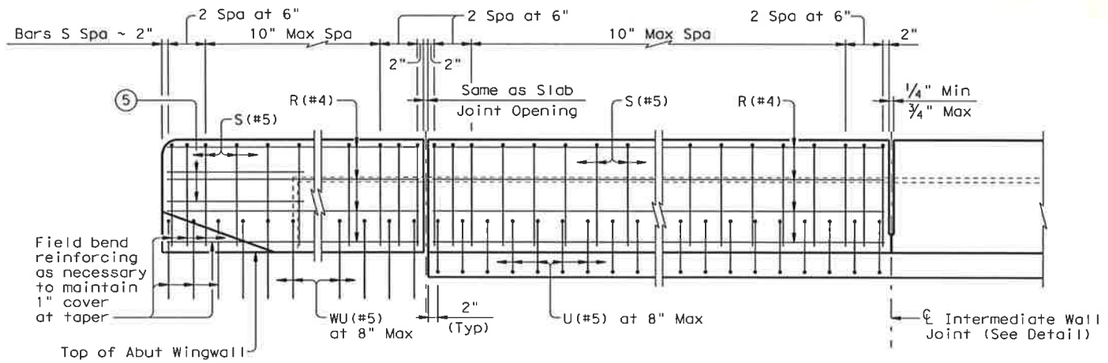

ELEVATION SHOWING TYPICAL REINFORCING PLACEMENT

"CONSTRUCTION RECORD DRAWINGS_8-01-2009

(1) Metal Beam Guard Fence Transitions must be attached to the bridge rail and extended along the embankment unless otherwise shown in the plans.

(2) Terminal Connectors and associated hardware are to be paid for under the Item "Metal Beam Guard Fence".

(3) Increase 2" for structures with Overlay.

(4) Back of rail offset may, with Engineer's approval be continued to the end of the railing.

(5) 4 additional Bars R(#4) 3'-8" in length shall be placed inside Bars S(#5) and centered 2'-0" from end of rail when Terminal Connections are required.

(6) Bolt recesses are only required when pedestrian sidewalks are adjacent to back of rail.

LEVELS DISPLAYED | ACC:

Sheet 1 of 2

Texas Department of Transportation
Bridge Division

TRAFFIC RAILING SINGLE SLOPE

TYPE SSTR

FILE: ristde37.dgn	DN: TxDOT	CK: TxDOT	DW: JTR	CK: TxDOT
©TxDOT February 2003	DISTRICT	FEDERAL AID PROJECT		SHEET
REVISIONS				120
4-05: Added TL-2 Terminal Connection & modified Notes.	COUNTY	CONTROL	SECT	JOB	HIGHWAY

P-200612-01

DISCLAIMER:
The use of this standard is governed by the "Texas Engineering Practice Act". No warranty of any kind is made by TxDOT for any purpose whatsoever. TxDOT assumes no responsibility for the conversion of this standard to other formats or for incorrect results or damages resulting from its use.

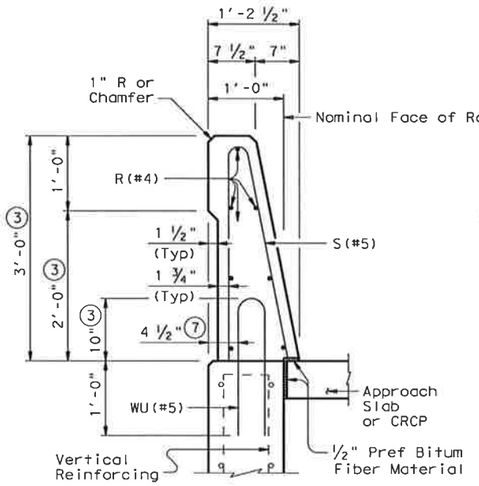

ON ABUTMENT WINGWALLS OR CIP RETAINING WALLS

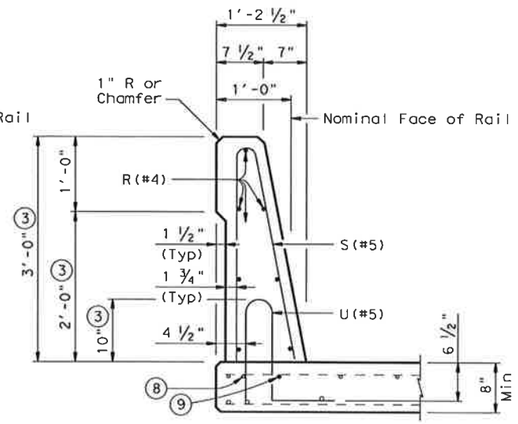

ON BRIDGE SLAB

SECTIONS THRU RAIL

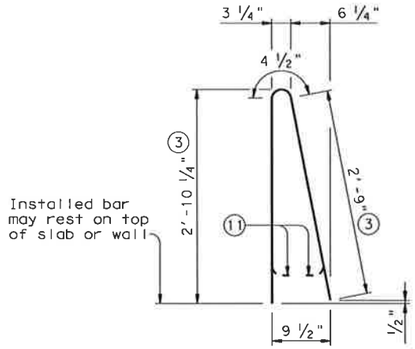

BARS S (#5)

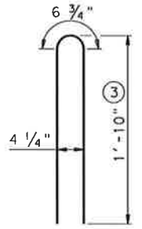

BARS WU (#5)

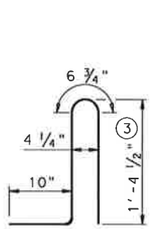

BARS U (#5)

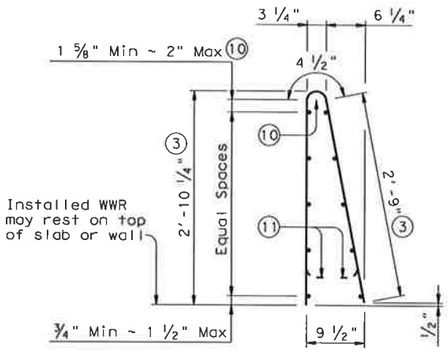

OPTIONAL WELDED WIRE REINFORCEMENT (WWR)

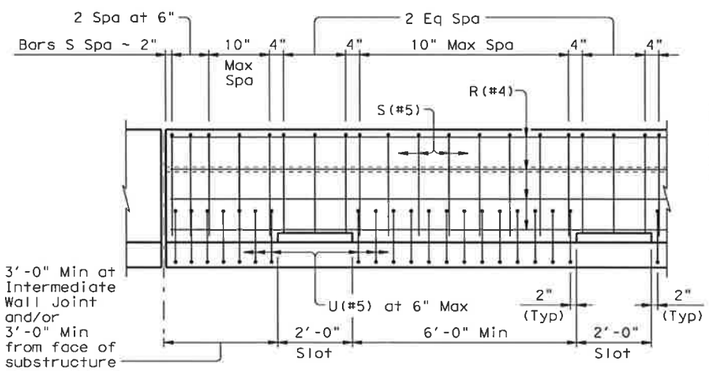

OPTIONAL SIDE SLOT DRAIN DETAIL

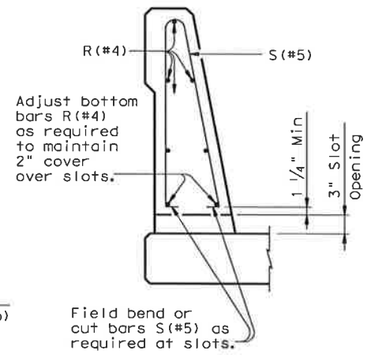

SECTION THRU OPTIONAL SIDE SLOT DRAIN

Note: Side Slot Drains may be used where shown elsewhere on the plans or as directed by the Engineer. Drains should not be placed over railroad tracks, lower roadways, or sidewalks. When this rail is used as a separator between a roadway surface and a sidewalk surface, side drain slots will not be permitted.

DESCRIPTION	LONGITUDINAL WIRES	VERTICAL WIRES
Minimum (Cumulative Total) Wire Area	0.933 Sq In.	0.248 Sq In. per Ft
	No. of Wires	Spacing
Minimum	6	4"
Maximum	11	12"
Maximum Wire Size Differential	The smaller wire shall have an area of 40% or more of the larger wire.	

③ Increase 2" for structures with Overlay.

⑦ 5 ½" when vertical reinforcing has closer clear cover over horizontal reinforcing in abutment wingwalls or retaining walls on traffic side of wall.

⑧ As an aid in supporting reinforcement, additional longitudinal bars may be used in the slab with the approval of the Engineer. Such bars shall be furnished at the Contractors expense.

⑨ Top longitudinal slab bar may be adjusted laterally 3" ± to tie reinforcing.

⑩ No longitudinal wires may be within upper bend.

⑪ Bend or cut as required to clear drain slots.

GENERAL NOTES:

This rail has been evaluated and accepted to be of equal strength to other safety-shaped railings with like geometry, which have been crash tested to meet NCHRP Report 350 TL-4 criteria. This rail can be used for design speeds of 50 mph and greater when a TL-3 rated guard fence transition is used. When a TL-2 rated guard fence transition is used, this rail can only be used for design speeds of 45 mph and less.

Rail anchorage details shown on this standard may require modification for select structure types. See appropriate details elsewhere in plans for these modifications.

All steel components except reinforcing shall be galvanized unless otherwise shown in plans.

All concrete shall be Class "C".

All reinforcing steel shall be grade 60.

Shop drawings will not be required for this rail.

This railing may be constructed with slip-forms when approved by the Engineer, with equipment approved by the Engineer. Sensor control for both line and grade must be provided. Tack welding to provide bracing for slip-form operations is acceptable. Welding can be performed at a minimum spacing of 3 ft between the cage and the anchorage. It is permissible to weld to U, WU and S bars at any location on the cage. If increased bracing is needed, additional anchorage devices must be added and welding must be performed in the upper two thirds of the cage.

The back of railing shall be vertical unless otherwise shown in the plans or approved by the Engineer.

Deformed welded wire reinforcement (WWR) may be used as an option to conventional reinforcement and shall be made in accordance with ASTM A497 (Deformed Wire). Combinations of Reinforcing Steel and WWR or configurations of WWR other than shown will be permitted when the conditions in the table are satisfied and the dimension from end of section to first welded vertical wire does not exceed 3".

Epoxy coat bars U and WU if slab bars are epoxy coated.

Average weight of railing with no overlay is 376 plf.

Texas Department of Transportation
Bridge Division

TRAFFIC RAILING SINGLE SLOPE

TYPE SSTR

FILE: ristde37.dgn	DN: TxDOT	CK: TxDOT	DW: JTR	CK: TxDOT
©TxDOT February 2003	DISTRICT	FEDERAL AID PROJECT		SHEET
REVISIONS				121
4-05: Added TL-2 Terminal Connection & modified Notes.	COUNTY		CONTROL SECT	JOB HIGHWAY

"CONSTRUCTION RECORD DRAWINGS_8-01-2009

P-200612-01

ACC:
LEVELS DISPLAYED

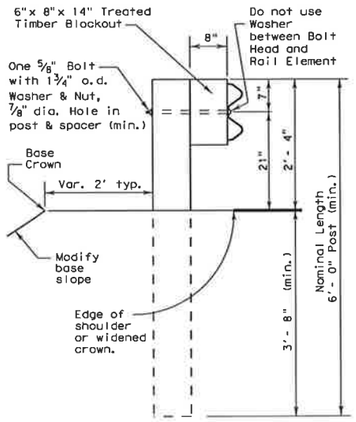

TYPICAL POST

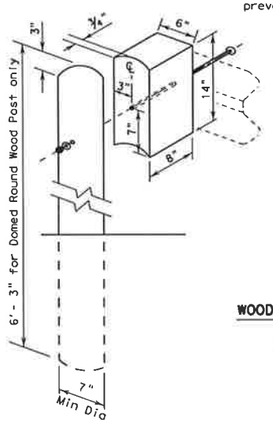

WOOD BLOCKOUT TO ROUND WOOD POST DETAIL

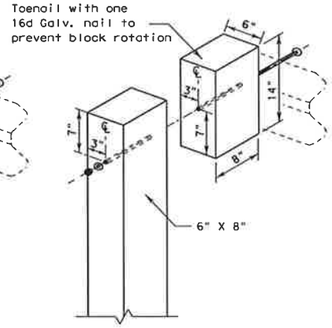

WOOD BLOCKOUT TO RECTANGULAR WOOD POST DETAIL

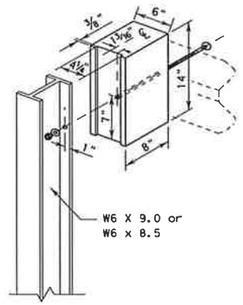

WOOD BLOCKOUT TO STEEL POST DETAIL

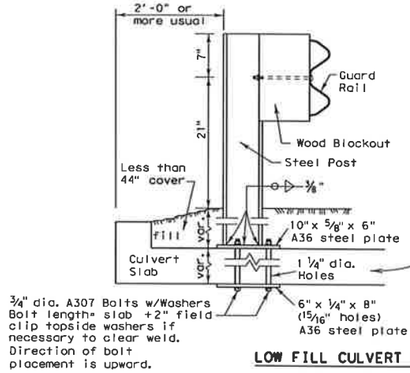

LOW FILL CULVERT POST MOUNTING OPTION

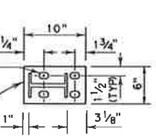

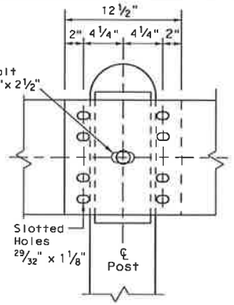

RAIL SPLICE

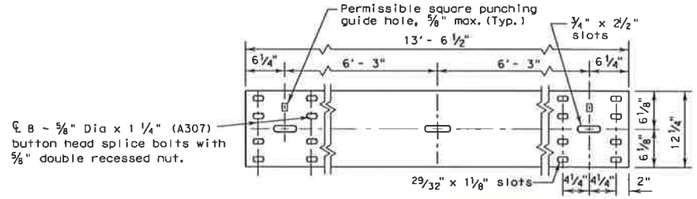

ELEVATION OF NOMINAL 12 1/2 FOOT GUARDRAIL
(25 foot sections may also be supplied)

GENERAL NOTES

1. The exact position of guard fence shall be as shown elsewhere on the plans or as directed by the Engineer. Guard fence shall be transitioned to a smooth connection with other guard fence or structure railing as shown elsewhere on plans.
2. Rail element shall meet all requirements of AASHTO M-180 except as modified on the plans. The terminal connectors shall be of the same material, but shall not be less than 10 gauge. Contractor shall verify that the locations of bolt holes match those in the Terminal Connector prior to ordering of materials.
3. Unless otherwise shown in the plans, guard fence placed in the vicinity of curbs shall be blocked out so that the face of curb is located directly below or behind the face of the blockout. Rail placed over curbs shall be installed so that the post bolt is located approximately 21-inches above the gutter pan or roadway surface.
4. Unless otherwise shown in the plans, MBGF shall be placed with the face of rail directly above the shoulder edge (or curbface) except for upstream end treatments.
5. At the option of the Contractor, the rail elements for the guard fence may be furnished in either 12 1/2 or 25 foot nominal lengths with post bolt slots for connection to posts.
6. The terminal anchor post shall be set in Class "A" concrete in (unless otherwise shown on plans) in accordance with Item, "Portland Cement Concrete". Concrete shall be subsidiary to the bid item requiring construction of the terminal rail section and anchorage system.
7. An anchor other than to a terminal anchor post shall consist of a connection similar to the rail splice or similar to the terminal connector.
8. Galvanized washers used with the eight 5/8" splice bolts and nuts that are provided for terminal connectors and/or terminal anchor posts shall be 1 3/4" x 3" x 3/16", or 1" i.d. and 2" o.d. x 0.134" (ANSI B27.2) narrow Type A plain washers.
9. Special fabrication will be required at installations having a curvature of less than 150' radius.
10. Button head post bolts (A307) shall be of sufficient length to extend through the full thickness of the nut and no more than 3/4" beyond it. Button head splice bolts (A307) are 5/8"x 1 1/4" with a 5/8" double recessed nut. Fittings (bolts, nuts, and washers) shall be in accordance with Item, Metal for Structures". Fittings shall be subsidiary.
11. Crown will be widened to accommodate guard fence.
12. If guardrail is placed on a side slope away from the pavement edge, then the slope rate between the edge of the pavement and the face of the barrier will be 1V:10H or flatter.
13. Posts shall not be set full depth in concrete.
14. Where solid rock is encountered or where shown on the plans, the diameter of the holes shall be approximately 12 inches, the backfilling shall be with a cohesionless material, and embedment depth shall be 1'-6" or more as directed by the Engineer.
15. Unless otherwise directed by the Engineer, a composite material post and/or blockout from the Department approved list of suppliers may be substituted for a post and/or blockout of similar dimensions. The list of approved suppliers of posts and blockouts will be maintained by the Construction Division, TxDOT.

"CONSTRUCTION RECORD DRAWINGS_8-01-2009

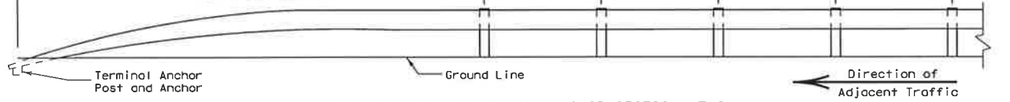

ELEVATION FOR TERMINAL ANCHOR SECTION (TAS)

(Terminal anchor sections are only for downstream guardrail end anchorage usage outside the horizontal clearance area of opposing traffic)

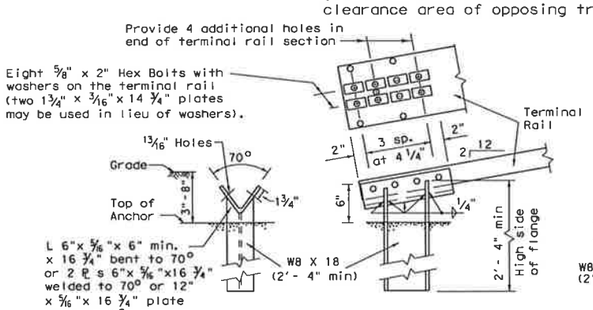

Note: This post requires four additional holes (shop or field) in the terminal rail member with eight 5/8" bolts and washer plates as shown for attachment.

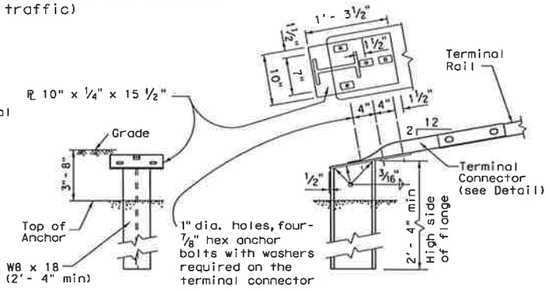

Note: This optional post requires the use of the 10 ga. terminal connector with four 7/8" hex bolts for attachment to the anchor post.

TERMINAL ANCHOR POST OPTIONS

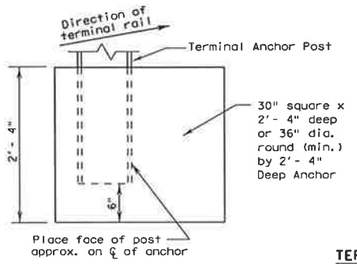

Notes:
Either post may be used with either anchor.

No construction joint is allowed in the concrete anchor.

Terminal rail may be bolted to post and in twist position prior to placing concrete anchor.

If concrete anchor is precast, the area should be compacted as directed by the Engineer, when placed in the field.

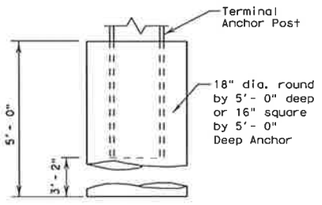

TERMINAL CONCRETE ANCHOR OPTIONS

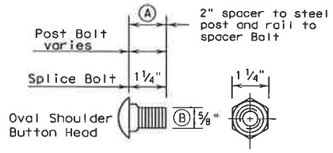

SPLICE BOLT

(A) 1 1/4" spacer to steel post hex bolt. 2" rail to spacer button head bolt.

(B) (7/8" hex bolts required for terminal connector)

TERMINAL CONNECTOR : The terminal connector may also be used on the MBGF(TL2) transition (See MBGF(TL2) Standard Sheet), or on the downstream end of a concrete rail located outside the horizontal clearance area of opposing traffic. (See BED Standard Sheet)

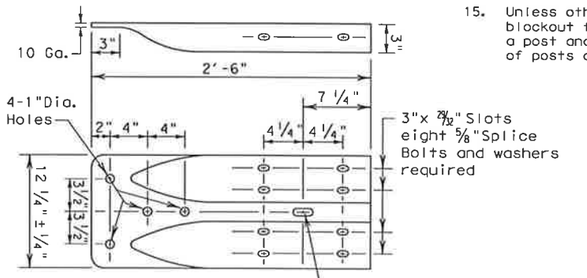

TERMINAL CONNECTOR

R = Radius
D = Diameter

DISCLAIMER:
The use of this standard is governed by the "Texas Engineering Practice Act". No warranty of any kind is made by TxDOT for any purpose whatsoever. TxDOT assumes no responsibility for the conversion of this standard to other formats or for incorrect results or damages resulting from its use.

LEVELS DISPLAYED

Texas Department of Transportation
Design Division (Roadway)

METAL BEAM GUARD FENCE

MBGF-03A

FILE: mbgf03a.dgn	DN: MAM	CK: MAM	DW: RAR	CK: MAM	
©TxDOT JULY 1994	DIST	FEDERAL AID PROJECT			SHEET
REVISIONS					122
	COUNTY		CONTROL	SECT	JOB	HIGHWAY

P-200612-01

DISCLAIMER:
The use of this standard is governed by the "Texas Engineering Practice Act". No warranty of any kind is made by TxDOT for any purpose whatsoever. TxDOT assumes no responsibility for the conversion of this standard to other formats or for incorrect results or damages resulting from its use.

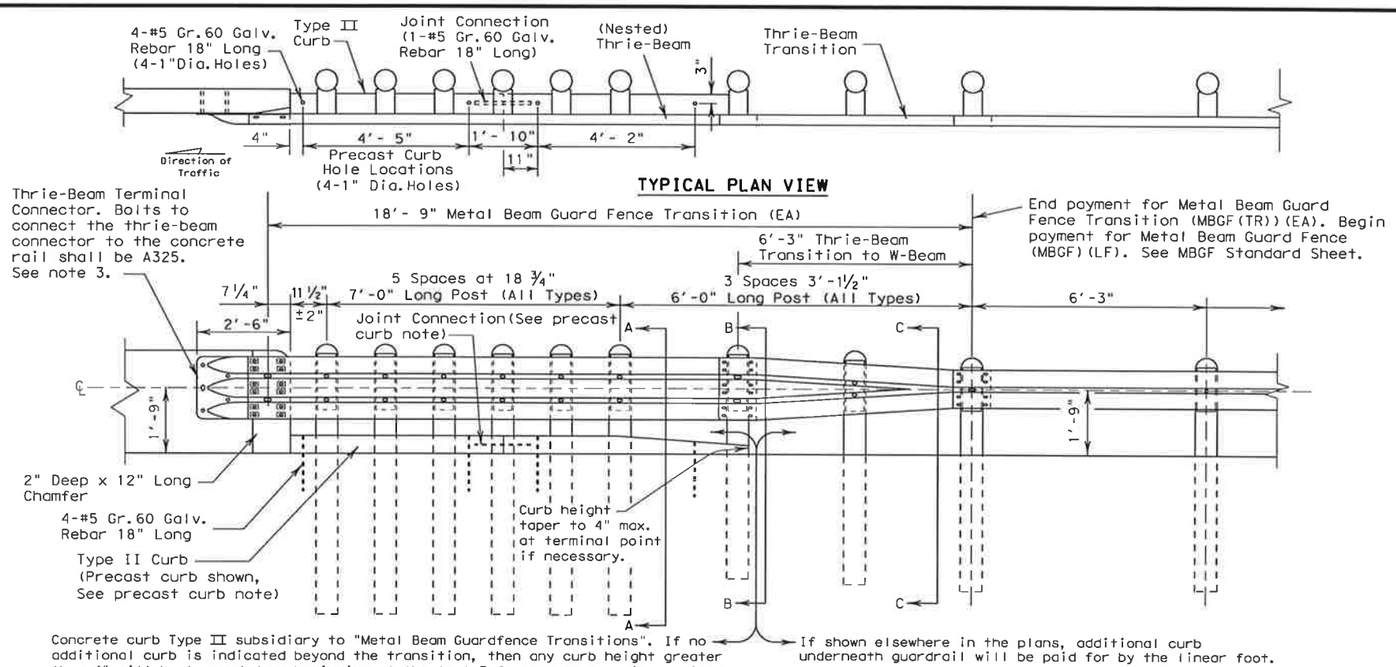

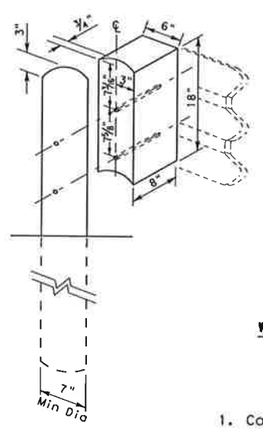

WOOD BLOCKOUT TO ROUND WOOD POST DETAIL

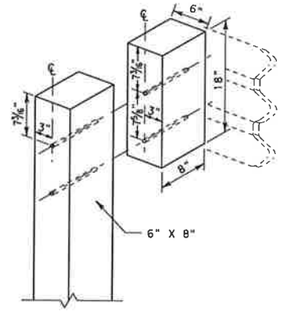

WOOD BLOCKOUT TO RECTANGULAR WOOD POST DETAIL

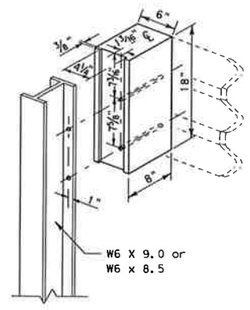

WOOD BLOCKOUT TO STEEL POST DETAIL

GENERAL NOTES

1. Concrete curb may be cast-in-place or precast as shown on this sheet. When used in conjunction with thrie-beam guardfence transitions, curb shall be Type II (typically 5 3/4" height above surface; See CCCG standard sheet) unless otherwise shown in the plans. If other curb heights are shown in the plans in conjunction with the transition, this curb height may be from 4" to 8" with a relatively vertical face. Concrete curbs shall be continuous to the seventh post. Any drainage cuts must be located past this post.

2. The type of post (round wood post, rectangular wood post, or steel post) will be shown elsewhere in the plans. The exact position of transitions shall be shown elsewhere in the plans or as directed by the Engineer. See MBGF standard sheet for additional details and information.

3. Rail element shall meet all requirements of AASHTO M-180 except as modified on the plans. The terminal connector and the thrie-beam transition to w-beam shall be of the same material, but shall not be less than 10 gauge.

   Contractor shall verify that the locations of bolt holes match those in the Terminal Connector prior to ordering of materials.

4. Unless otherwise shown in the plans, transitions shall be placed with the blockout face in front of or directly above the curbface.

5. Galvanized washers used with the 5/8" splice bolts and nuts that are provided for terminal connectors shall be (FWR03)(3"x 1 3/4"x 3/16" with 1"x 3/4" slotted hole).

6. Button head post bolts (A307) shall be of sufficient length to extend through the full thickness of the nut and no more than 3/4" beyond it. Button head spice bolts (A307) are 5/8" x 1 1/4" with a 5/8" double recessed nut. Galvanized fittings (bolts, nuts, and washers) shall be in accordance with Item, "Metal For Structures". Fittings shall be subsidiary to the bid item requiring construction of transition.

7. Crown will be widened to accommodate transitions.

8. Where solid rock is encountered or where shown on the plans, the diameter of the holes shall be approximately 12 inches, the backfilling shall be with a cohesionless material, and embedment depth shall be 1'- 6" or more as directed by the Engineer.

9. Posts shall not be set full depth in concrete.

10. Unless otherwise directed by the Engineer, a composite material post and/or blockout from the Department approved list of suppliers may be substituted for a post and/or blockout of similar dimensions. The list of approved suppliers of posts and blockouts will be maintained by the Construction Division, TxDOT.

11. Refer to MBGF Standard Sheet for additional details.

CONSTRUCTION RECORD DRAWINGS_8-01-2009

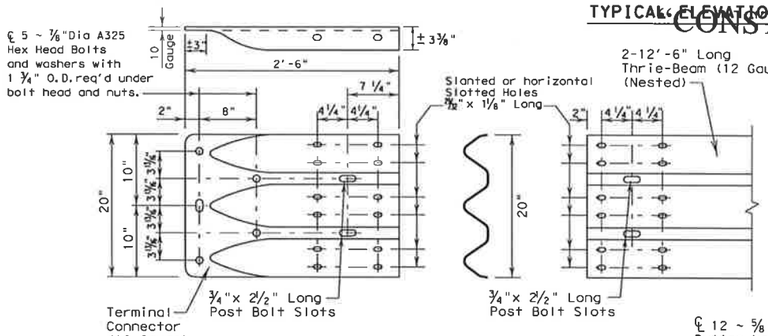

THRIE-BEAM TERMINAL CONNECTION

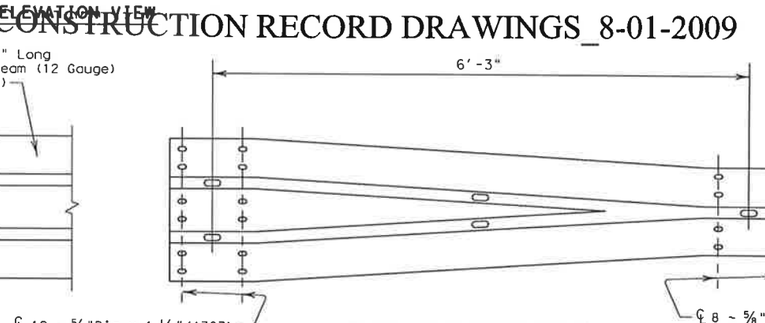

THRIE-BEAM TRANSITION TO W-BEAM (10 Gauge)

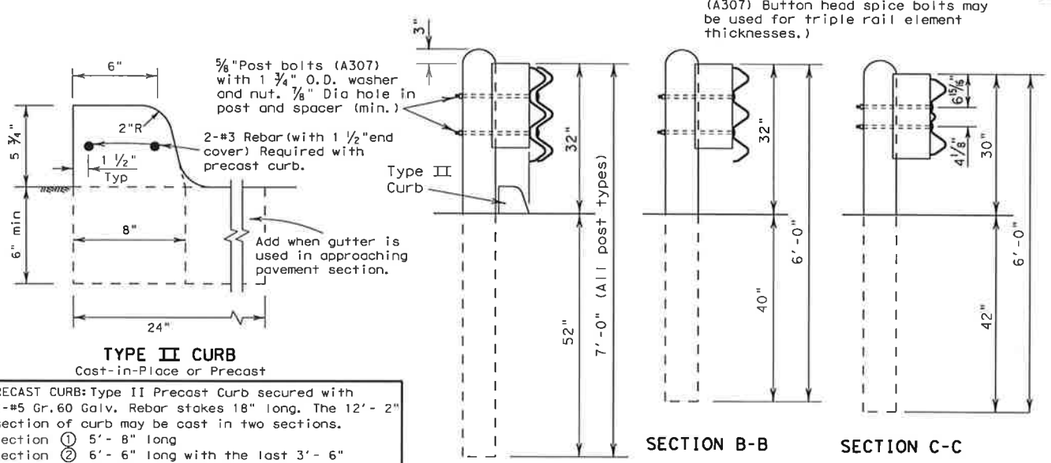

TYPE II CURB
Cast-in-Place or Precast

PRECAST CURB: Type II Precast Curb secured with 4-#5 Gr.60 Galv. Rebar stakes 18" long. The 12'- 2" section of curb may be cast in two sections.
Section ① 5'- 8" long
Section ② 6'- 6" long with the last 3'- 6" of curb tapered to a 4" height.
The Joint Connection is two 9" long 1" dia female ends connected with 1-#5 Gr.60 Galv.Rebar 18" long.

SECTION A-A | SECTION B-B | SECTION C-C

TRANSITION SECTIONS

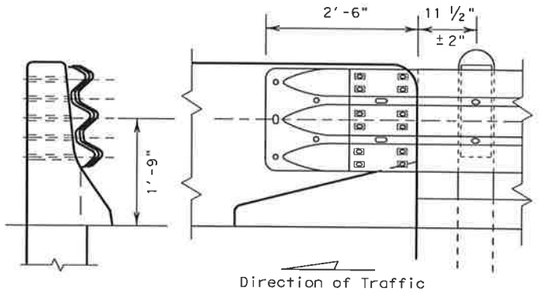

CONNECTION TO T5, SSTR, & HT SERIES BRIDGE RAILS AND CTB & SSCB TRAFFIC BARRIERS

(24) Washers (FWR03)(3"x 1 3/4"x 3/16" with 1"x 3/4" slotted hole) under the head and nut will be required for the terminal connector to nested thrie beam. (12) 2" x 5/8" splice bolts for these series rails.
See typical views and T5, SSTR, HT, CTB & SSCB Series Standard Sheets for additional details.

If connecting to existing Bridge Rails. Contact the Bridge Division for proper retrofit details.

LEVELS DISPLAYED

Texas Department of Transportation
Design Division (Roadway)

METAL BEAM GUARD FENCE TRANSITION

MBGF(TR)-05

FILE: mbgftr05.dgn	DN: MAM	CK: MAM	DW: BGD	CK:	
©TxDOT December 2001	DIST	FEDERAL AID PROJECT			SHEET
REVISIONS					123
	COUNTY		CONTROL	SECT	JOB	HIGHWAY

P-200612-01

DISCLAIMER
The use of this standard is governed by the "Texas Engineering Practice Act". No warranty of any kind is made by TxDOT for any purpose whatsoever. TxDOT assumes no responsibility for the conversion of this standard to other formats or for incorrect results or damages resulting from its use.

TWO LANE TWO-WAY ROADWAY WITH OR WITHOUT SHOULDERS

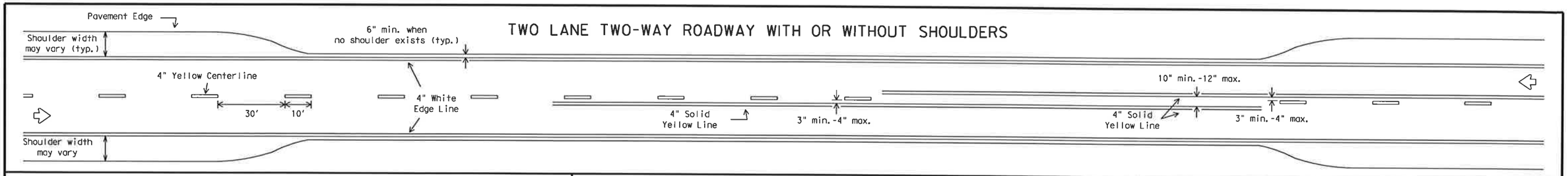

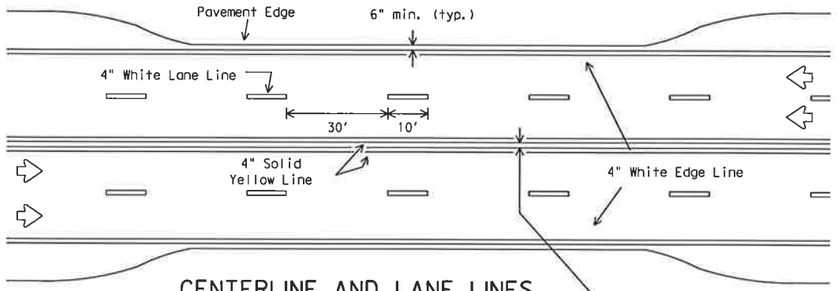

CENTERLINE AND LANE LINES FOUR LANE TWO-WAY ROADWAY WITH OR WITHOUT SHOULDERS

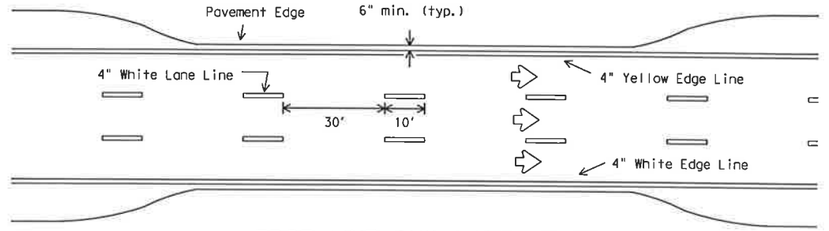

EDGE LINE AND LANE LINES ONE-WAY ROADWAY WITH OR WITHOUT SHOULDERS

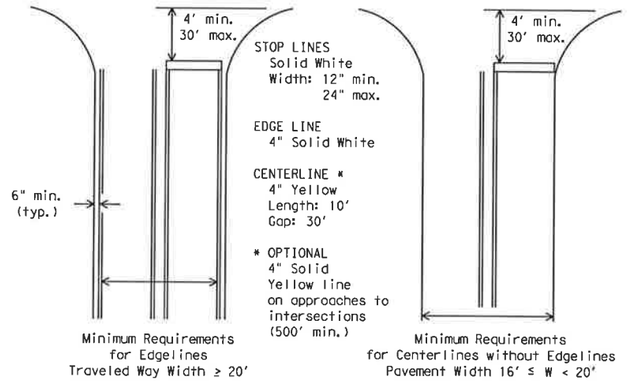

GUIDE FOR PLACEMENT OF STOP LINES, EDGE LINE & CENTERLINE

Based on Traveled Way and Pavement Widths for Undivided Highways

FOUR LANE DIVIDED ROADWAY INTERSECTIONS

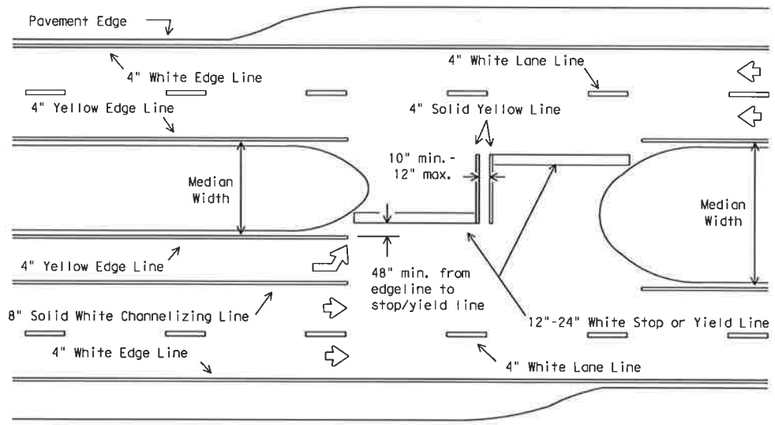

All medians shall be field measured to determine the location of necessary striping. Stop/Yield bars and centerlines shall be placed when the median width is greater than 30 ft. The median width is defined as the area between two roadways of a divided highway measured from edge of traveled way to edge of traveled way. The median excludes turn lanes. The median width might be different between intersections, interchanges and of opposite approaches of the same intersection. The narrow median width will be the controlling width to determine if markings are required.

ROADWAYS WITH REDUCED SHOULDER WIDTHS ACROSS BRIDGE OR CULVERT

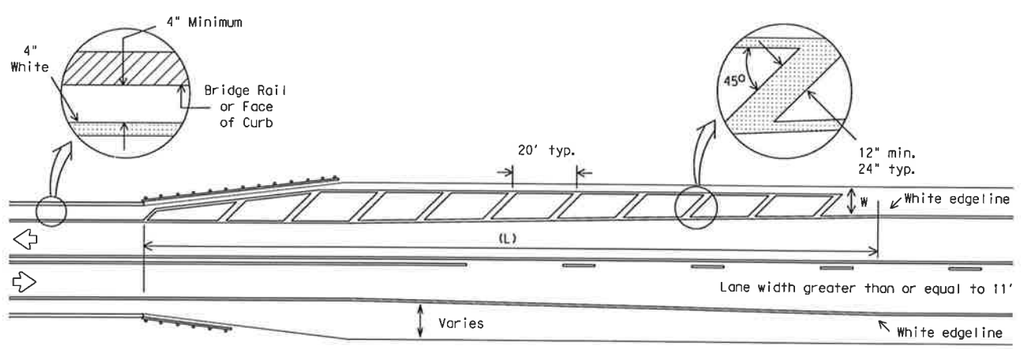

NOTES:

1. No-passing zone on bridge approach is optional but if used, it shall be a minimum 500 feet long.
2. For crosshatching length (L) see Table 1.
3. The width of the offset (W) and the required crosshatching width is the full shoulder width in advance of the bridge.
4. The crosshatching should be required if the shoulder width in advance of the bridge is 4 foot or wider and any reduction in shoulder width across the bridge occurs.
5. For guard fence details, refer elsewhere in the plans.

TABLE 1 - TYPICAL LENGTH (L)

Posted Speed *	Formula
30, 35, 40	$L = \frac{WS^2}{60}$
45, 50, 55, 60, 65, 70	L=WS

* 85th Percentile Speed may be used on roads where traffic speeds normally exceed the posted speed limit. Crosshatching length should be rounded up to nearest 5 foot increment.

L=Length of Crosshatching (FT.) W=Width of Offset (FT.)
S=Posted Speed (MPH)

EXAMPLES:

An 8 foot shoulder in advance of a bridge reduces to 4 feet on a 70 MPH roadway. The length of the cross-hatching should be:

$L = 8 \times 70 = 560$ ft.

A 4 foot shoulder in advance of a bridge reduces to 2 feet on a 40 MPH roadway. The length of the cross-hatching should be:

$L = 4(40)^2 / 60 = 106.67$ ft. rounded to 110 ft.

GENERAL NOTES:

Edgeline striping shall be as shown in the plans or as directed by the Engineer. The edgeline should typically be placed a minimum of 6 inches from the edge of pavement. This distance may vary due to pavement raveling or other conditions. Edgelines are not required in curb and gutter sections of roadways.

The traveled way includes only that portion of the roadway used for vehicular travel and not the parking lanes, sidewalks, berms and shoulders. The traveled ways shall be measured from the inside of edgeline to inside of edgeline of a two lane roadway.

All pavement marking materials shall meet the required Departmental Material Specifications as specified by the plans.

SPECIFICATION REFERENCE TABLE

MATERIAL SPECIFICATIONS	
PAVEMENT MARKERS (REFLECT.)	DMS-4200
EPOXY	DMS-6100
BITUMINOUS ADHESIVE FOR PAVEMENT MARKERS	DMS-6130

YIELD LINES

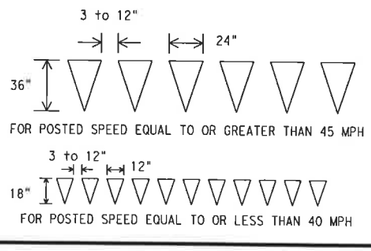

STANDARD PLANS
Texas Department of Transportation
Traffic Operations Division

TYPICAL STANDARD PAVEMENT MARKINGS

PM(1)-03

© TxDOT November 1978	DN: - BAS	CK: - GRB	DW: - FDN	CK: - CAL	REG NO.:
REVISIONS 8-95, 5-00, 8-00, 3-03	STATE DISTRICT	FEDERAL REGION 6	FEDERAL AID PROJECT		SHEET 124
	COUNTY		CONTROL	SECTION	JOB / HIGHWAY

ACC:
LEVELS DISPLAYED
1 2 3 4 5 6 7 8 9 10 11 12 13 14 15 16
17 18 19 20 22 23 24 25 26 27 28 29 30 31 32
33 34 35 36 37 38 39 40 41 42 43 44 45 46 47 48
49 50 51 52 53 54 55 56 57 58 59 60 61 62 63

~~"CONSTRUCTION RECORD DRAWINGS" 8-01-2009~~

P-200612-01

DISCLAIMER
The use of this standard is governed by the "Texas Engineering Practice Act". No warranty of any kind is made by TxDOT for any purpose whatsoever. TxDOT assumes no responsibility for the conversion of this standard to other formats or for incorrect results or damages resulting from its use.

REFLECTIVE RAISED PAVEMENT MARKERS FOR VEHICLE POSITIONING GUIDANCE

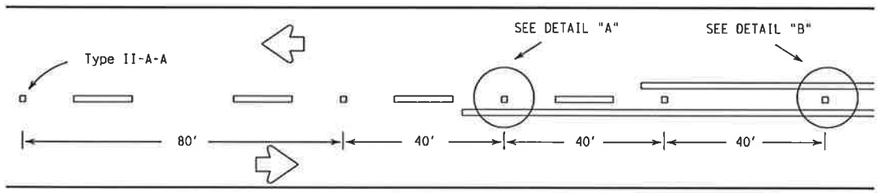

CENTERLINE FOR ALL TWO LANE ROADWAYS

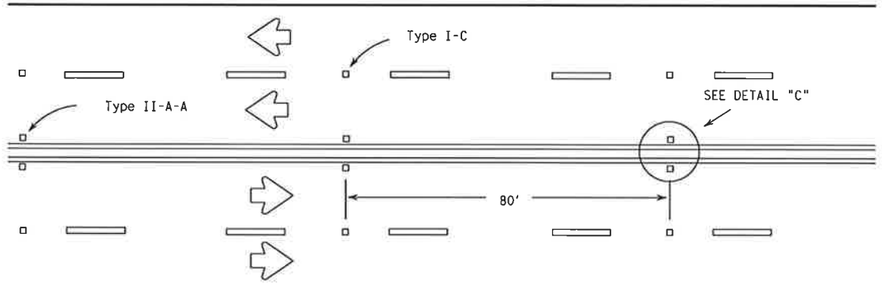

CENTERLINE & LANE LINES FOR FOUR LANE TWO-WAY HIGHWAYS

Raised pavement marker Type I-C, clear face toward normal traffic, shall be placed on 80-foot centers.

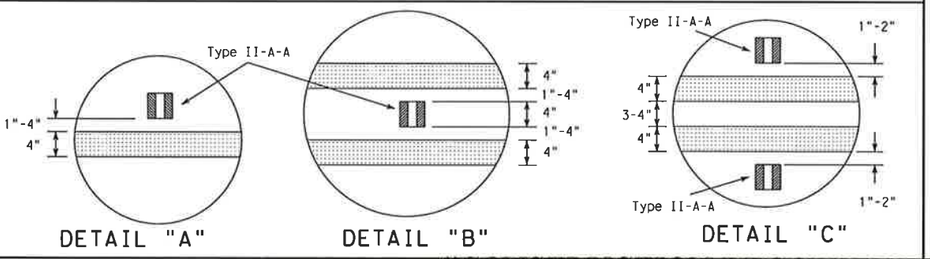

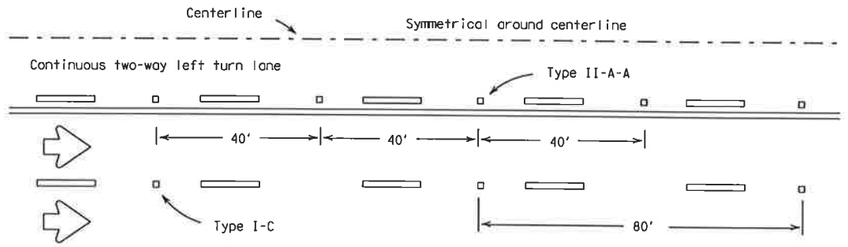

CENTERLINE AND LANE LINES FOR TWO-WAY LEFT TURN LANE

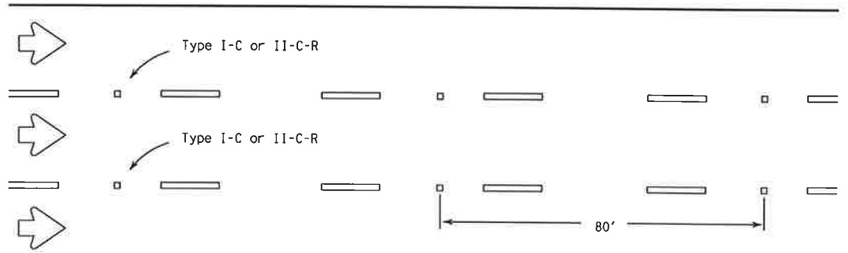

LANE LINES FOR ONE-WAY ROADWAY (NON-FREEWAY FACILITIES)

Raised pavement markers Type II-C-R shall have clear face toward normal traffic and red face toward wrong-way traffic.

As required by the Engineer or shown elsewhere in the plans, Type II-C-R or Type I-C markers may be placed on 40-foot centers for the below listed conditions:

1. horizontal curves,
2. continuously illuminated sections,
3. high volume roadways
4. or roadways where safety concerns exist.

RAISED PAVEMENT MARKERS

(REFLECTORIZED)

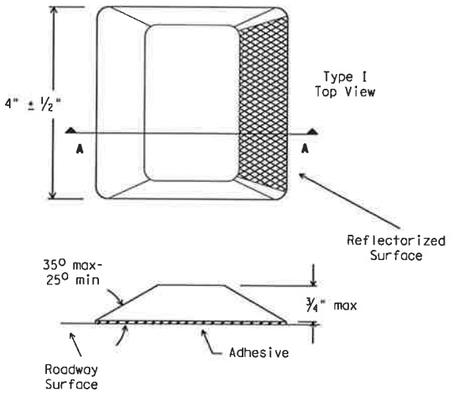

"CONSTRUCTION RECORD DRAWINGS_8-01-2009

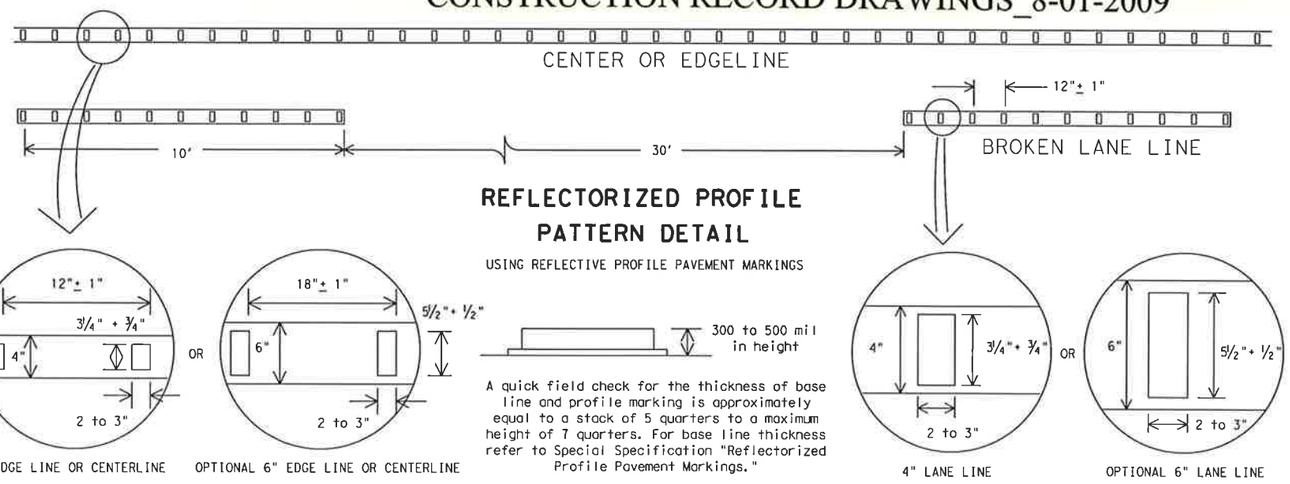

REFLECTORIZED PROFILE PATTERN DETAIL

USING REFLECTIVE PROFILE PAVEMENT MARKINGS

A quick field check for the thickness of base line and profile marking is approximately equal to a stack of 5 quarters to a maximum height of 7 quarters. For base line thickness refer to Special Specification "Reflectorized Profile Pavement Markings."

GENERAL NOTES:

All raised pavement markers placed in broken lines shall be placed in line with and midway between the stripes.

On concrete pavements the raised pavement markers should be placed to one side of the longitudinal joints.

All pavement marking materials shall meet the required Departmental Material Specifications as specified by the plans.

SPECIFICATION REFERENCE TABLE

MATERIAL SPECIFICATIONS	
PAVEMENT MARKERS (REFLECT.)	DMS-4200
EPOXY	DMS-6100
BITUMINOUS ADHESIVE FOR PAVEMENT MARKERS	DMS-6130

STANDARD PLANS
Texas Department of Transportation
Traffic Operations Division

POSITION GUIDANCE USING RAISED MARKERS
REFLECTORIZED PROFILE MARKINGS
PM(2)-00A

© TxDOT April 1977	DW: BAS	CK: GRB	DW: FDN	CK: CAL
REVISIONS 10-86 4-92 5-00 8-00	STATE DISTRICT	FEDERAL REGION 6	FEDERAL AID PROJECT	SHEET 125
	COUNTY	CONTROL	SECTION	JOB / HIGHWAY

ACC:

LEVELS DISPLAYED
1 2 3 4 5 6 7 8 9 10 11 12 13 14 15 16
17 18 19 20 21 22 23 24 25 26 27 28 29 30 31 32
33 34 35 36 37 38 39 40 41 42 43 44 45 46 47 48
49 50 51 52 53 54 55 56 57 58 59 60 61 62 63

P-200612-01 228

DISCLAIMER
The use of this standard is governed by the "Texas Engineering Practice Act". No warranty of any kind is made by TxDOT for any purpose whatsoever. TxDOT assumes no responsibility for the conversion of this standard to other formats or for incorrect results or damages resulting from its use.

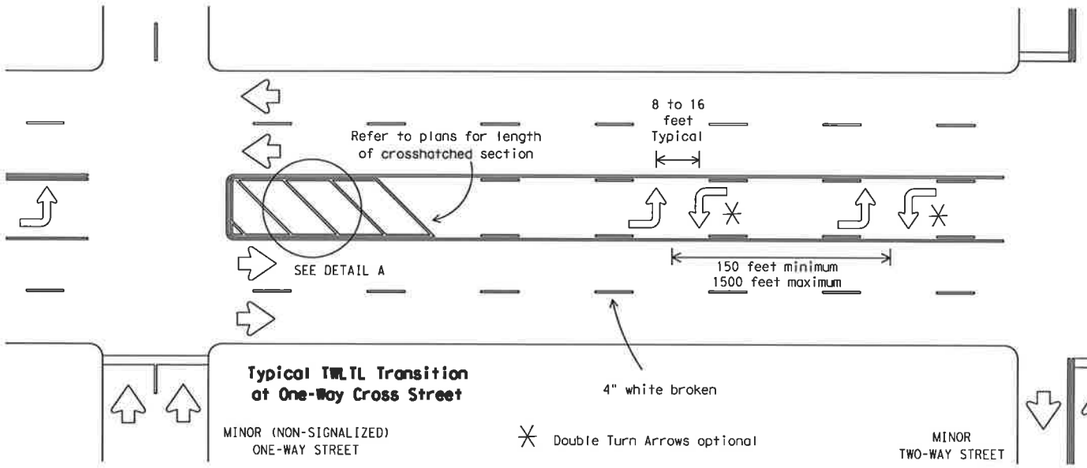

Typical TWLTL Transition at One-Way Cross Street

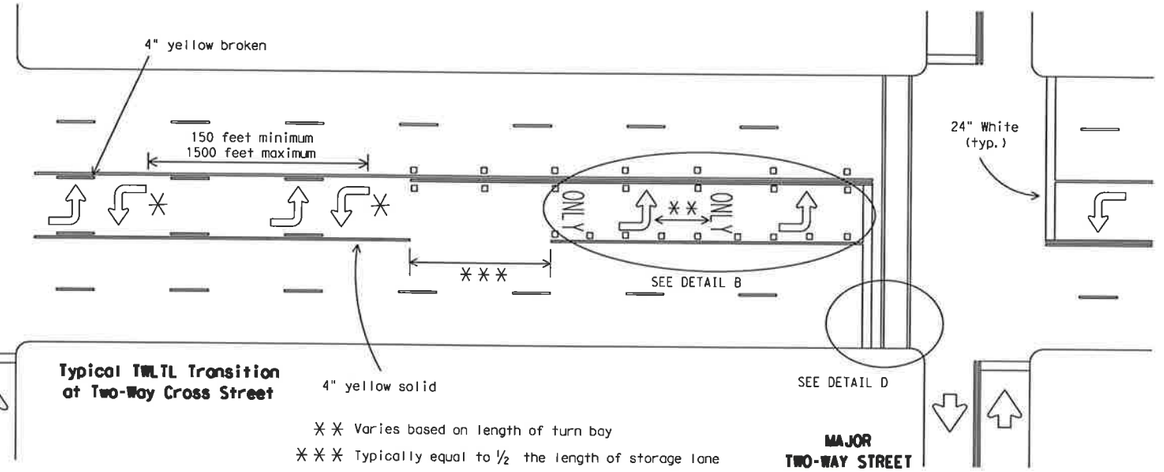

Typical TWLTL Transition at Two-Way Cross Street

** Varies based on length of turn bay
*** Typically equal to ½ the length of storage lane

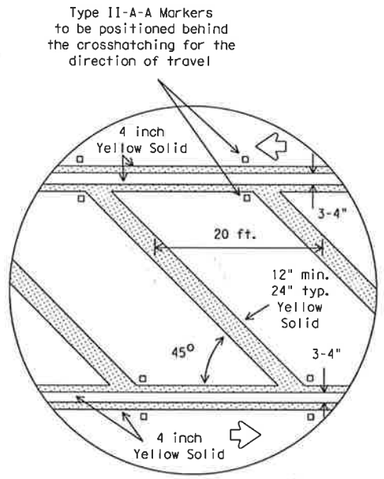

DETAIL A

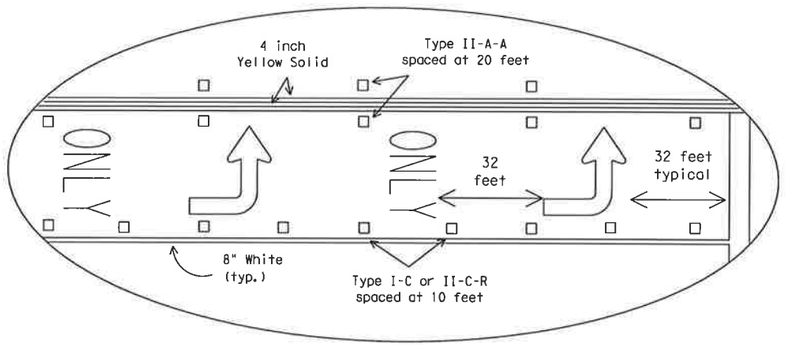

DETAIL B

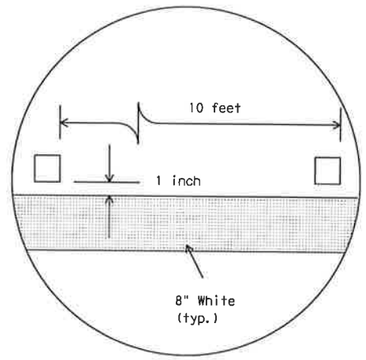

DETAIL C

Raised pavement marker Type I-C with undivided highways, flush medians and two way left turn lanes. Raised pavement marker Type II-C-R with divided highways and raised medians.

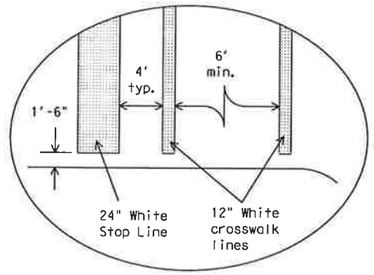

DETAIL D

Final placement of Stop Bar and Crosswalk shall be approved by the Engineer in the field.

"CONSTRUCTION RECORD DRAWINGS_8-01-2009

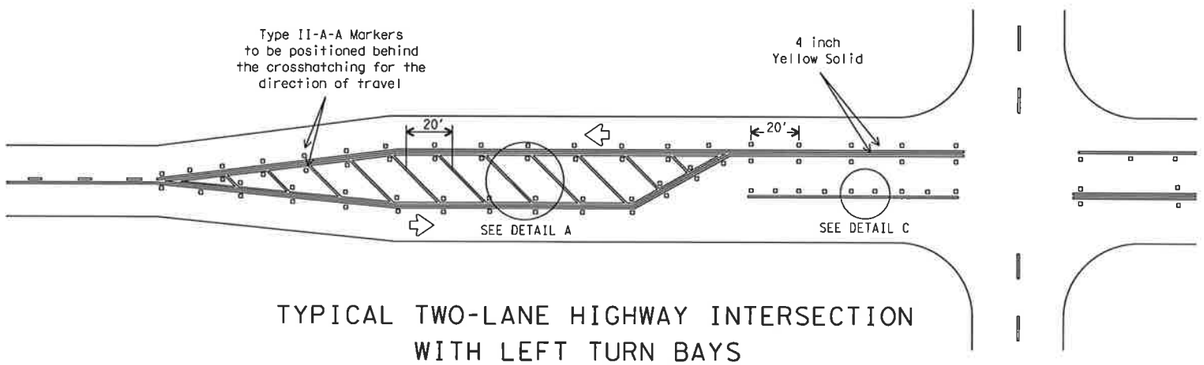

TYPICAL TWO-LANE HIGHWAY INTERSECTION WITH LEFT TURN BAYS

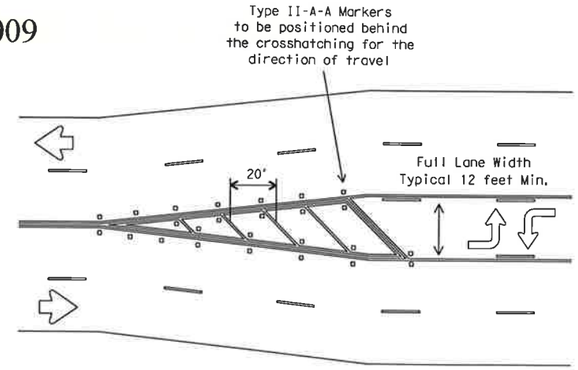

TYPICAL TRANSITION FOR TWLTL AND DIVIDED HIGHWAY

GENERAL NOTES

Refer elsewhere in plans for additional RPM placement and details.

Details for words and arrows as shown on other sheets.

All pavement marking materials shall meet the required Departmental Material Specifications as specified by the plans.

For a left turn bay, two sets of words and arrows shall be used if the length of the bay is equal to or greater than 180 feet. The bottom of the first ONLY shall be placed at the beginning of the turn bay lane line as shown above.

Other crosswalk paterns as shown in the "Texas Manual on Uniform Traffic Control Devices" may be used.

SPECIFICATION REFERENCE TABLE

MATERIAL SPECIFICATIONS	
PAVEMENT MARKERS (REFLECT.)	DMS-4200
EPOXY	DMS-6100
BITUMINOUS ADHESIVE FOR PAVE. MKS.	DMS-6130

LEVELS DISPLAYED
1 2 3 4 5 6 7 8 9 10 11 12 13 14 15 16 17 18 19 20 21 22 23 24 25 26 27 28 29 30 31 32 33 34 35 36 37 38 39 40 41 42 43 44 45 46 47 48 49 50 51 52 53 54 55 56 57 58 59 60 61 62 63

ACC:

STANDARD PLANS
Texas Department of Transportation
Traffic Operations Division

PAVEMENT MARKINGS FOR TWO-WAY LEFT TURN LANES DIVIDED HIGHWAYS AND RURAL LEFT TURN BAYS

PM(4)-03

© TxDOT April 1998	DN: - BAS	CK: - GRB	DW: - FDN	CK: - CAL	MEG NO.:
REVISIONS 5-00 8-00 3-03	STATE DISTRICT	FEDERAL REGION 6	FEDERAL AID PROJECT		SHEET 126
	COUNTY		CONTROL	SECTION	JOB	HIGHWAY

P-200612-01

DISCLAIMER
The use of this standard is governed by the "Texas Engineering Practice Act". No warranty of any kind is made by TxDOT for any purpose whatsoever. TxDOT assumes no responsibility for the conversion of this standard to other formats or for incorrect results or damages resulting from its use.

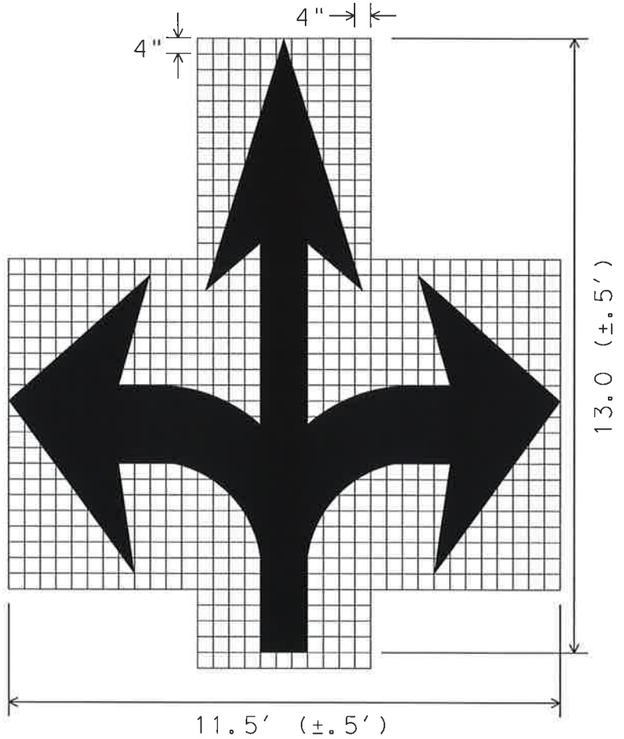

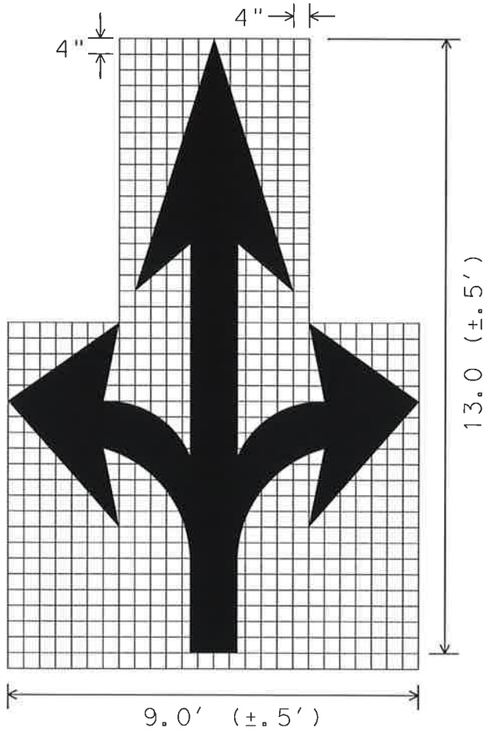

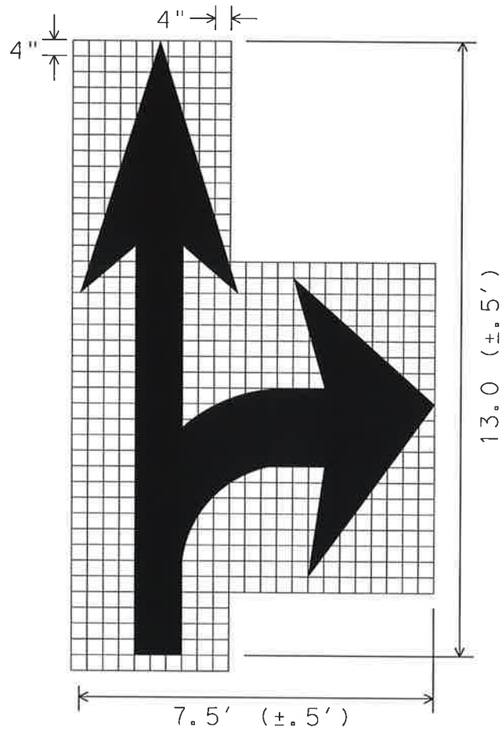

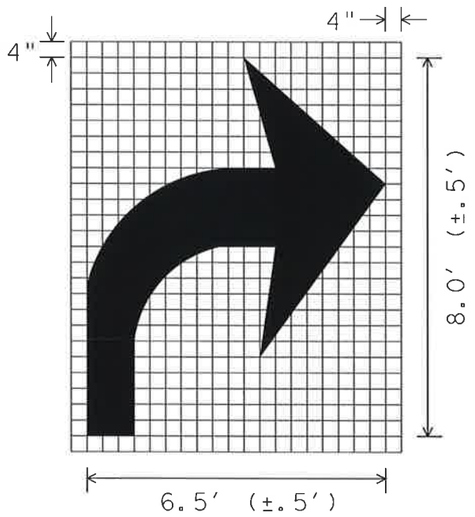

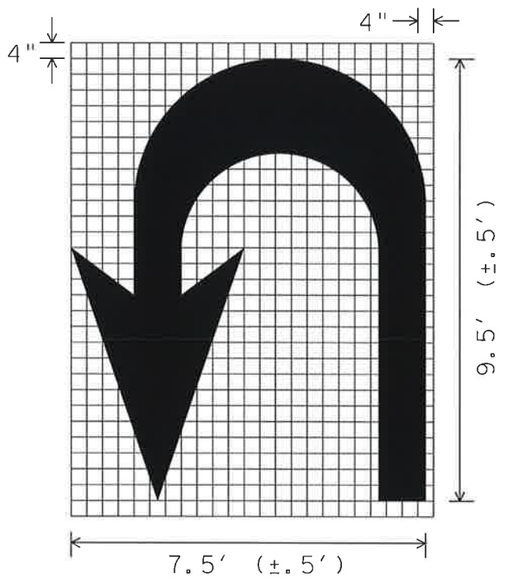

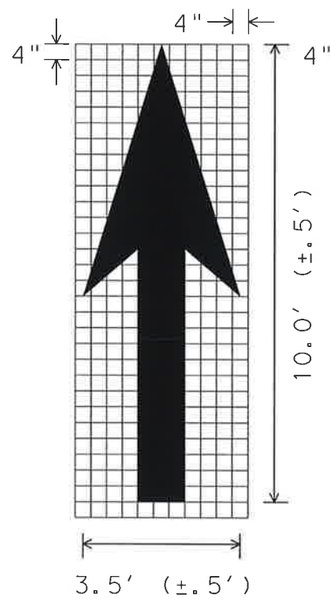

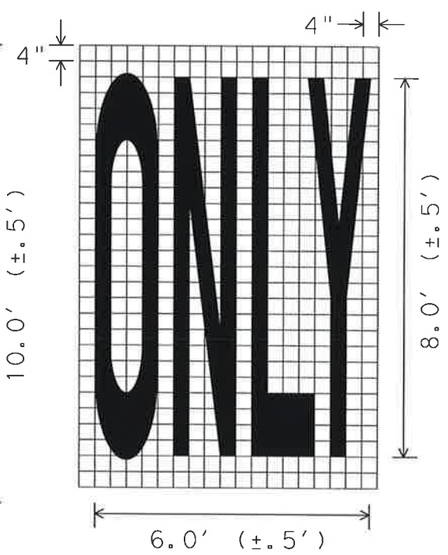

GENERAL NOTES;

1. Minimum 8 foot white markings should be used, unless otherwise noted. If message consists of more than one word, it should be placed with first word nearest the driver.
2. These details are standard size for normal installation; sizes may be reduced approximately one-third for low speed urban conditions; larger sizes may be needed for freeways, above average speed conditions or other critical locations.
3. The longitudinal space between markings should be at least four times the height of the markings, on low speed roads, but should not exceed ten times the height under any condition.
4. Markings considered appropriate for use when warranted include the following:
   A. Regulatory
      STOP
      RIGHT (LEFT) TURN ONLY
      25 MPH
      SYMBOL ARROWS
   B. Warning
      STOP AHEAD
      SIGNAL AHEAD
      SCHOOL
      SCHOOL X-ING
      PED X-ING
      R X R (see RCPM standard)
   C. Guide
      US XXX
      ROUTE XXX
      STATE XXX
      Other words or symbols may be necessary under certain conditions
5. Uncontrolled use of pavement markings can result in driver confusion. Word and symbol markings should be no more than three lines.
6. The word "STOP" shall not be used on the pavement unless accompanied by a Stop line and Stop sign. The word "STOP" shall not be placed on the pavement in advance to a stop line, unless every vehicle is required to stop at all times.
7. Pavement markings should generally be no more than one lane in width, with School messages being the exception. For details of School and School crossing pavement markings, refer to Part VII of the "Texas Manual on Uniform Traffic Control Devices".
8. Spacing between letters should be approximately 4 inches. The width of letters may vary depending on the width of the travel lanes.
9. Lane-Use arrow markings may be used to convey either guidance or mandatory messages. Arrows used to convey a mandatory movement must be accompanied by standard signs and the pavement marking word "ONLY".
10. Pavement markings are to be located as specified elsewhere in the plans.

SPACING BETWEEN LINES OF PAVEMENT MARKINGS	
MPH	SPACING
≤ 45	MINIMUM 4 TIMES THE LETTER HEIGHT
> 45	MINIMUM - 4 TIMES THE LETTER HEIGHT MAXIMUM - 10 TIMES THE LETTER HEIGHT

LEVELS DISPLAYED
ACC:

STANDARD PLANS
Texas Department of Transportation
Traffic Operations Division

STANDARD PAVEMENT MARKINGS (ARROWS)

PM(6)-01

©TxDOT March 2001

DN: -	CK: - GRB	DW: - FDN	CK: - CAL

REVISIONS	STATE DISTRICT	FEDERAL REGION	FEDERAL AID PROJECT	SHEET
	6			127

COUNTY	CONTROL	SECTION	JOB	HIGHWAY

"CONSTRUCTION RECORD DRAWINGS_8-01-2009

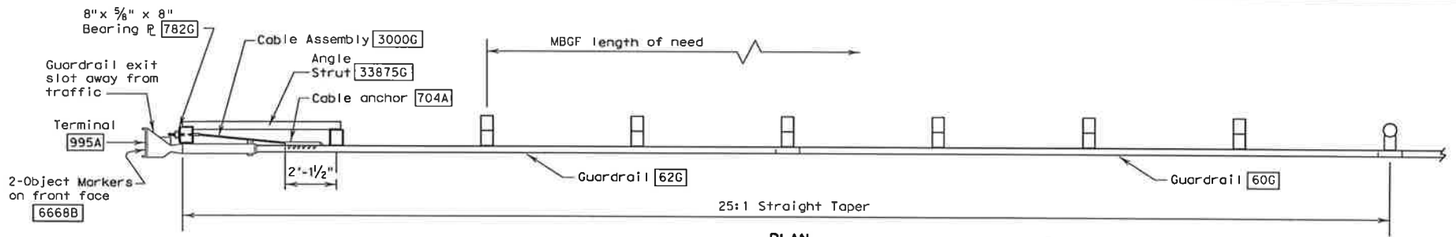

PLAN

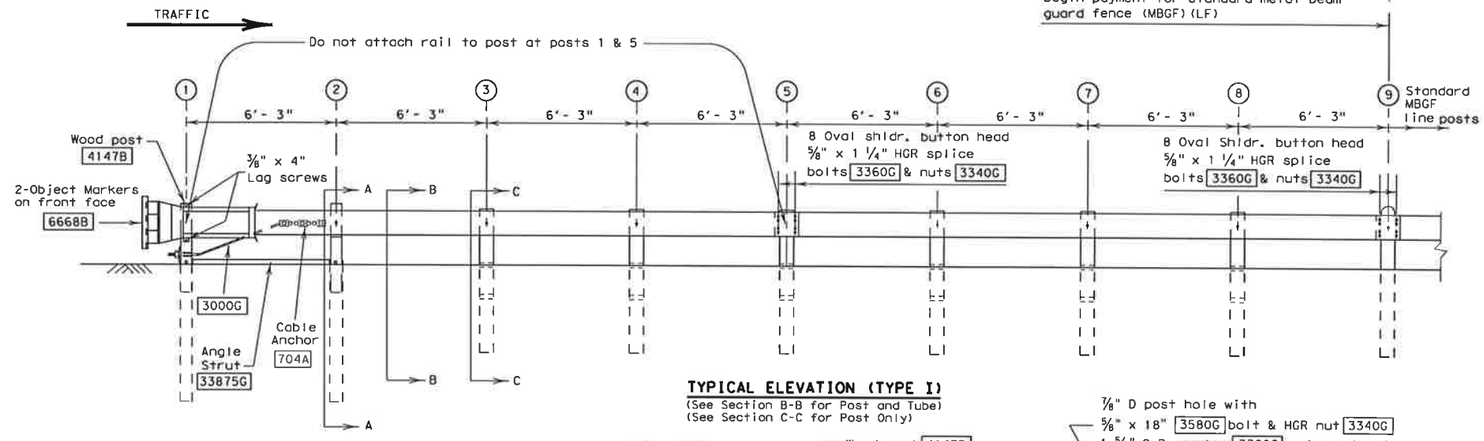

TYPICAL ELEVATION (TYPE I)
(See Section B-B for Post and Tube)
(See Section C-C for Post Only)

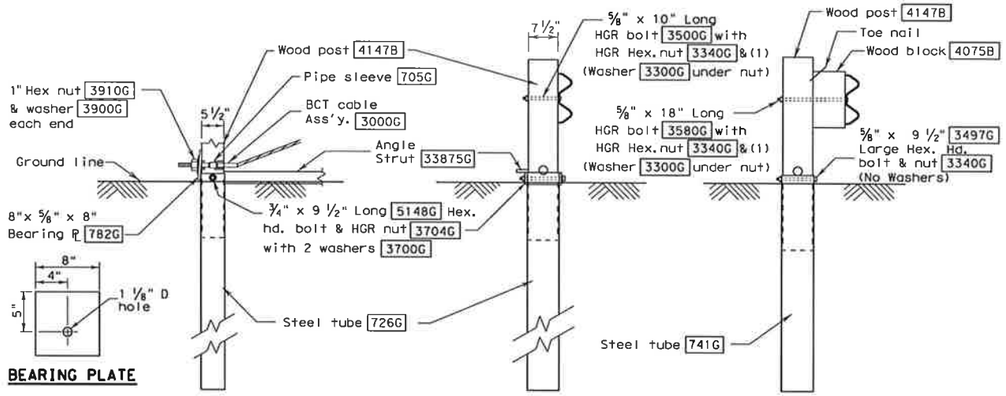

PARTIAL VIEW AT POST #1

SECTION A-A
(at post 2)

SECTION B-B
(Typ. at Posts 3 thru 8, Type II & III)

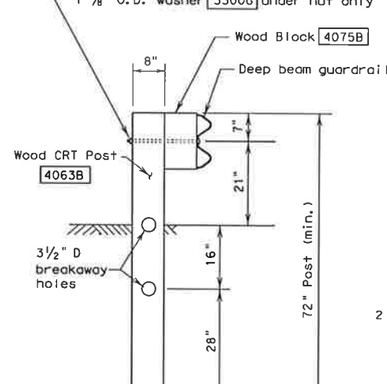

SECTION C-C
(Typ. at post only positions)

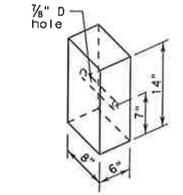

WOOD BLOCKOUT
4075B

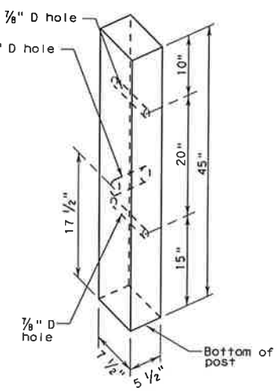

All measurements should be taken from bottom of posts.

WOOD POST
4147B

POST & TUBE OPTIONS			
Type I	Posts	①	thru ②
Type II	Posts	①	thru ④
Type III	Posts	①	thru ⑧

R = Radius
D = Diameter

GENERAL NOTES

1. The Type of SGT unit will be specified elsewhere in the plans. Numbers in circles indicate post position. The Type of SGT unit chosen is a maintenance consideration and does not affect the systems performance.

Post & Tube Options		Post Only	
Type I	Posts ① thru ②	Posts ③ thru ⑧	
Type II	Posts ① thru ④	Posts ⑤ thru ⑧	
Type III	Posts ① thru ⑧	None	

2. If the SGT system must be placed on a radius, the minimum radius is 150 feet.
3. All bolts, nuts, cable assemblies, cable anchors, steel tubes & bearing plates shall be galvanized.
4. For non-curb installations, the MBGF will be flared at a rate of 25:1 over the first 50 foot of the system to prevent the terminal head from encroaching on the shoulder. The flare may be decreased or eliminated for specific installations if directed by the Engineer. A 25:1 flare rate will be used at curb sections, beginning at post number 5 and ending at post number one.
5. The steel tubes shall not protrude more than 4 inches above ground. Site grading may be necessary to meet this requirement.
6. The steel tubes may be driven with an approved driving head. They shall not be driven with the wood post in the tube. If the steel tubes are placed in drilled holes, the backfill material must be satisfactorily compacted to prevent tube settlement.
7. When rock excavation is encountered, a 12 inch diameter post hole, 20 inches deep may be used if approved by the Engineer. Granular material will be placed in the bottom of the hole approximately 2 ½ inches deep to provide drainage. The steel tube sleeves will be field cut to 20 inches in length, placed in the hole and backfilled with adequately compacted material excavated from the hole.
8. The breakaway cable assembly must be taut. A locking device, (vice grips or channel lock pliers) should be used to prevent the cable from twisting when tightening the nuts.
9. The wood blockouts shall be "toe nailed" to the rectangular wood posts to prevent them from turning when the wood shrinks.
10. For curb installations, the soil tubes and posts shall be installed at the proper ground elevation behind the curb. The posts will then require field drilling new holes to accommodate the rail to post connection bolt to maintain the proper height of the rail above the gutter pan. The excess post length above the rail will be removed if directed by the Engineer.
11. An object marker shall be installed on the front of the impact head as detailed on D&OM(VIA).
12. A special site evaluation should be considered, prior to using this end treatment where there is less than 25 feet between the extrusion side of the end treatment and any adjacent driving lane.

BILL OF MATERIAL

Code #	POST & TUBE OPTIONS Type I Qty.	Type II Qty.	Type III Qty.	DESCRIPTION
62G	1	1	1	#1 Deep Beam Guardrail (12 Ga) at 25'
60G	1	1	1	#2 Deep Beam Guardrail (12 Ga) at 25'
726G	2	2	2	Steel Tube - 6"x 8"x 72" x ⅛" min
741G	0	2	6	Steel Tube - 6" x 8" x 54" x ⅛" min
4147B	2	4	8	Wood Posts - 5 ½" x 7 ½" x 45"
4063B	6	4	0	Wood CRT Posts - 6"x 8"x 72"
4075B	6	6	6	Wood Block - 6"x 8"x 14"
705G	1	1	1	Pipe Sleeve - 2" std. pipe x 5 ½"
782G	1	1	1	Bearing Plate - 8"x 8"x ⅝"
704A	1	1	1	Cable Anchor
3000G	1	1	1	Cable Assembly (¾" x 78")
33875G	1	1	1	Angle Strut
995A	1	1	1	ET-2000 Plus Guardrail Terminal
				HARDWARE
5148G	2	2	2	¾" x 9 ½" Hex Hd (Top of tubes 1&2) A325
3300G	7	7	7	⅝" Washers
3478G	2	2	2	⅝" x 7 ½" Hex Bolt
3500G	1	1	1	⅝" x 10" Post Bolt (Post 2 of LET)
3580G	6	6	6	⅝" x 18" HGR Post Bolt (posts ③ thru ⑧)
3360G	16	16	16	⅝" x 1 ¼" HGR Splice Bolt
3340G	25	27	31	⅝" HGR Nut (16-spl, 7-posts)
4228G	2	2	2	⅜" x 4" Lag Screw
3910G	2	2	2	1" Hex Nut (Anchor Cable)
3900G	2	2	2	1" Washer (Anchor Cable)
6668B	2	2	2	Object Marker (12" x 12")
3700G	4	4	4	¾" Washer
3704G	2	2	2	¾" Heavy Hex Nut
3497G	0	2	6	⅝" x 9 ½" Hex Hd (Top of Tubes 3-8) A307

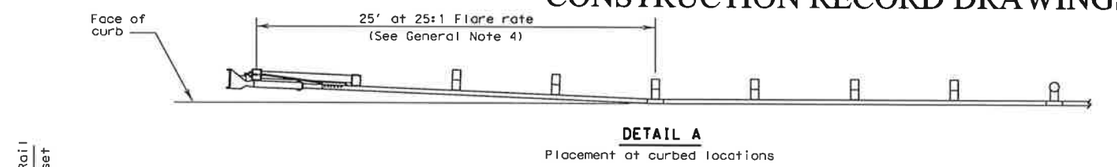

DETAIL A
Placement at curbed locations

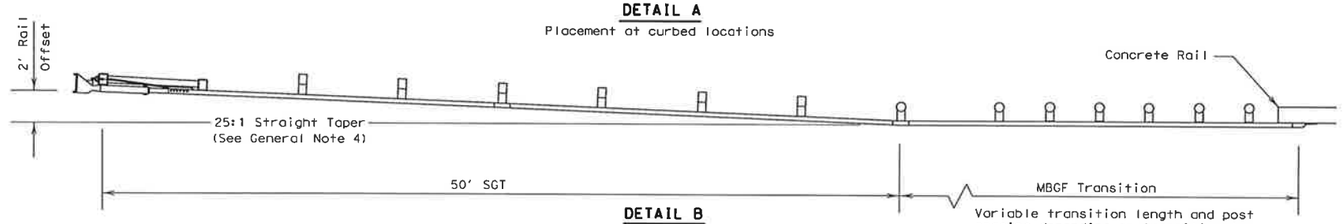

DETAIL B
Usual minimum placement to protect bridge ends
Variable transition length and post spacing depending on transition type

"CONSTRUCTION RECORD DRAWINGS_8-01-2009

Texas Department of Transportation
Design Division (Roadway)

SINGLE GUARDRAIL TERMINAL
(ET-2000 PLUS)
(WOOD POST)

SGT(7)-03A

FILE: sgt703a.dgn	DN: MAM	CK: MAM	DW: BCD	CK:	
©TxDOT APRIL 1997	DIST	FEDERAL AID PROJECT			SHEET 128
REVISIONS	COUNTY	CONTROL	SECT	JOB	HIGHWAY

P-200612-01

DISCLAIMER:
The use of this standard is governed by the "Texas Engineering Practice Act". No warranty is made by TxDOT for any purpose and accepts no responsibility for the conversion of this standard to other formats or for incorrect results or damages resulting from its use.

LEVELS DISPLAYED
1

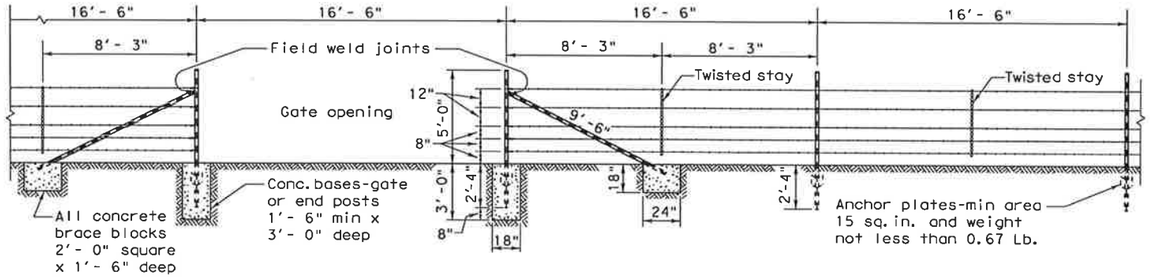

SECTION GALVANIZED BARBED WIRE FENCE WITH METAL POSTS
BRACING DETAIL USED AT ENDS AND GATES
TYPE "C" FENCE

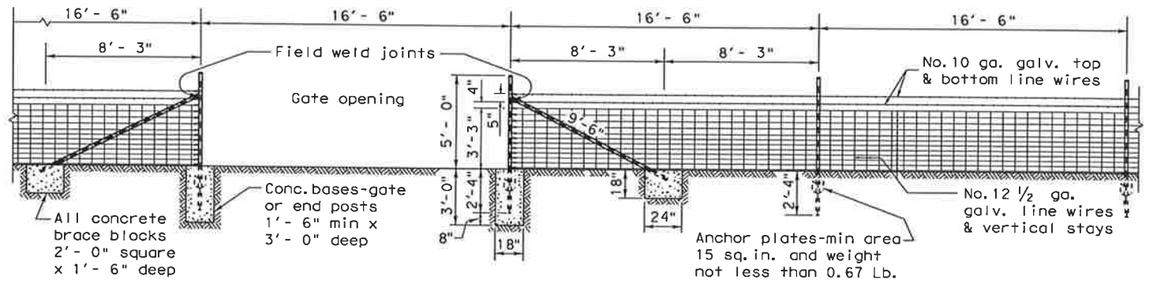

SECTION GALVANIZED WOVEN WIRE FENCE WITH METAL POSTS
BRACING DETAIL USED AT ENDS AND GATES
TYPE "D" FENCE

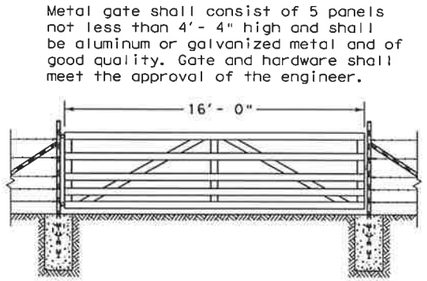

DETAIL TYPE 1 GATE

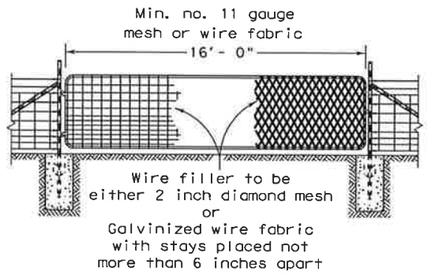

DETAIL TYPE 2 GATE

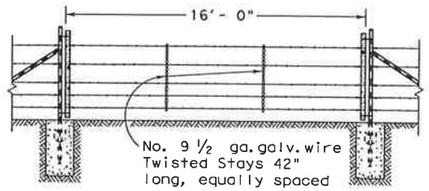

DETAIL TYPE 3 GATE

GENERAL NOTES

1. Any high point which interferes with the placing of wire mesh shall be excavated to provide a 2 inch clearance.
2. Latches for Type 1 and Type 2 gates shall be good commercial quality and design latch of the spring, fork or chain type. All latches shall be suitable to the gate and shall be approved by the Engineer.
3. Concrete shall be of the design and consistency approved by the Engineer and shall contain not less than 4 sacks of cement per cubic yard.
4. Hinges for Type 2 gates shall be a commercial design approved by the Engineer suitable for post and gate.
5. Anchor plates shall be of a design and thickness sufficient to prevent turning of the post in firm soil. Metal end, corner and pull post shall be a minimum of 2 inch inside diameter pipe minimum (3.65 lbs./lin.ft.) with minimum 1 ¼inch inside diameter pipe brace minimum (2.27 lbs./lin.ft.), minimum 2 ½" x 2 ½" x ¼" angle (4.1 lbs./lin.ft.) with minimum 2"x 2"x ¼" angle brace (3.19 lbs./lin.ft.) or other section approved by the Engineer. Fasteners for securing barbed wire or wire mesh to metal posts shall be a minimum of 11 gauge galvanized steel wire. Tubular posts shall be fitted with water tight malleable iron caps.
6. Metal line posts shall be not less than 6'- 6"in length and shall weigh not less than (1.33 lbs./lin.ft.).
7. The location of gates and corner posts will be as indicated elsewhere in these plans.

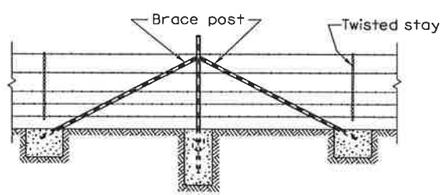

CORNER OR PULL POST ASSEMBLY

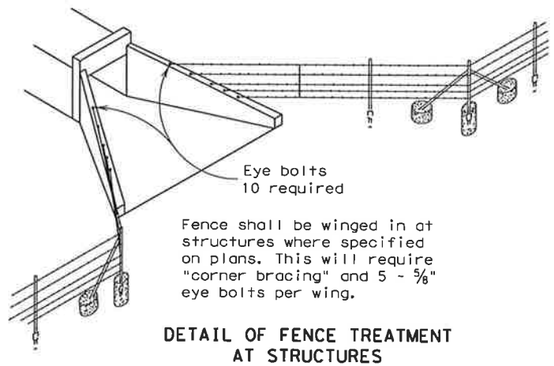

DETAIL OF FENCE TREATMENT AT STRUCTURES

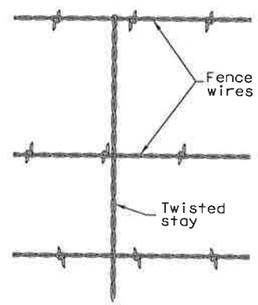

DETAIL OF STAY

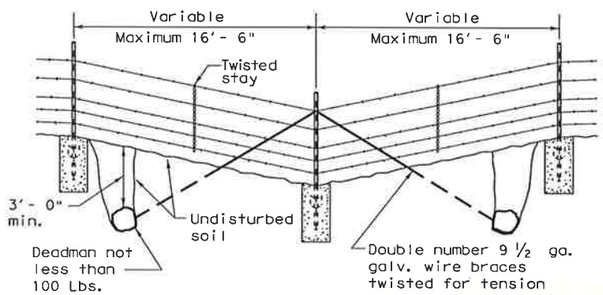

DETAIL OF FENCE SAG

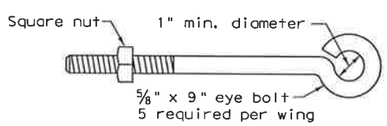

DETAIL OF EYE BOLT

"CONSTRUCTION RECORD DRAWINGS_8-01-2009

Texas Department of Transportation
Design Division (Roadway)

BARBED WIRE FENCE AND WOVEN WIRE FENCE
STEEL POSTS
WF(2)-96

FILE: WF296.DGN	DN: MAM	CK: MAM	DW: BGD	CK:	
© TxDOT 1996	DIST	FEDERAL AID PROJECT			SHEET
REVISIONS					129
	COUNTY		CONTROL	SECT	JOB	HIGHWAY

P-200612-01

DISCLAIMER:
The use of this standard is governed by the "Texas Engineering Practice Act". No warranty of any kind is made by TxDOT for any purpose whatsoever. TxDOT assumes no responsibility for the conversion of this standard to other formats or for incorrect results or damages resulting from its use.

LEVELS DISPLAYED

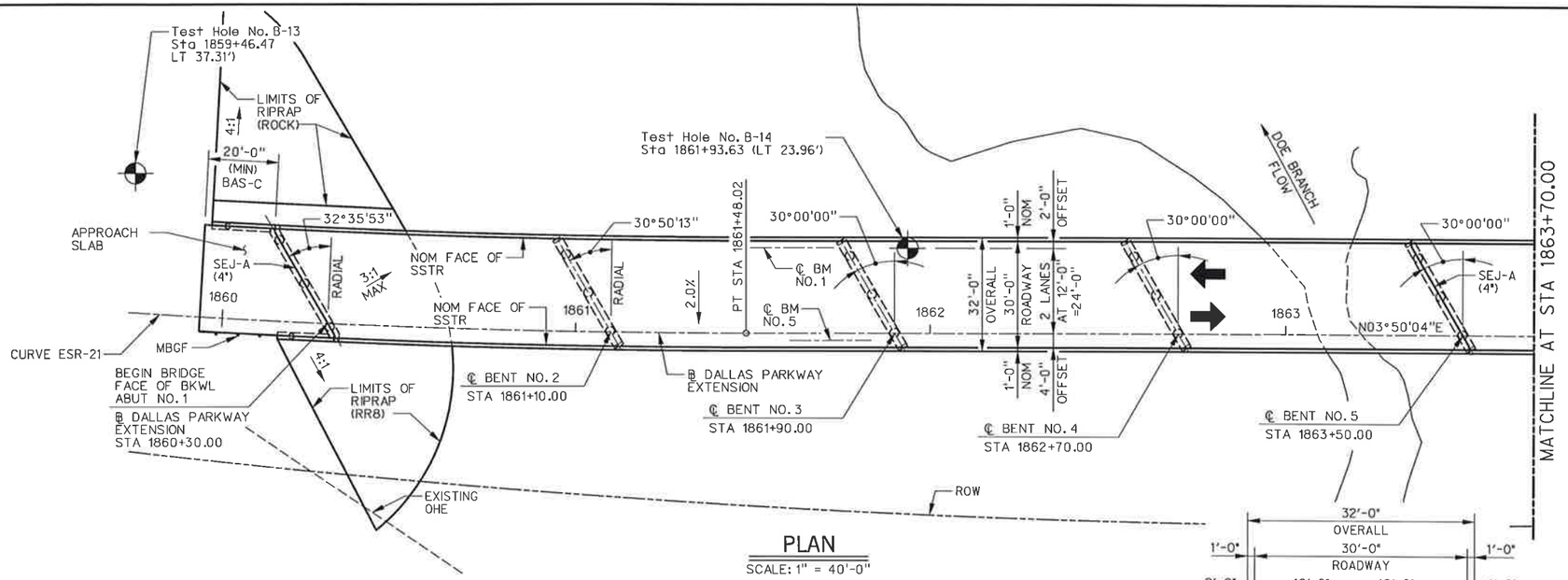

PLAN

SCALE: 1" = 40'-0"

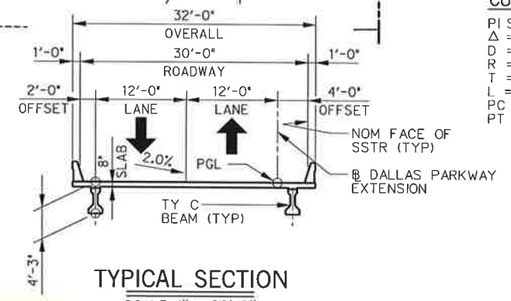

TYPICAL SECTION

SCALE: 1" = 20'-0"

DESIGN NOTES:

1. BRIDGE DESIGNED FOR HL-93 LOADING AND 25 PSF FUTURE OVERLAY PER AASHTO 2004 LRFD BRIDGE DESIGN SPECIFICATIONS AND CURRENT INTERIM REVISIONS.
2. DESIGN SPEED = 45 MPH
3. FUNCTIONAL CLASSIFICATION = URBAN ARTERIAL
4. NBI = XX-XXX-X-XXXXXX-XXX
5. CONTRACTOR SHOULD LOCATE ALL UTILITES AND INFORM ENGINEER IN WRITING OF ANY CONFLICTS PRIOR TO BEGINNING CONSTRUCTION.
6. "D" DENOTES BENTS WITH D BARS AND SLOTTED HOLES AT EXTERIOR BEAMS.
7. DRILLED SHAFT MINIMUM PENETRATIONS SHOWN ARE INTO UNWEATHERED DARK GRAY SHALE.

CURVE ESR-21 DATA

PI STA 1855+96.40
Δ = 24°40'30.86"(LT)
D = 02°12'05.08"
R = 2,602.685'
T = 569.267'
L = 1,120.883'
PC STA 1850+27.14
PT STA 1861+48.02

ALL ABUTMENTS AND BENTS ARE ON BEARING N63°50'04"E

DALLAS PARKWAY EXTENSION VERTICAL CURVE DATA

VPI STA 1858+00.00
VPI EL = 627.85'
VC = 500.00'
G1 = -4.057%
G2 = +1.000%
e = 3.16'

VPI STA 1865+00.00
VPI EL = 634.85'
VC = 400.00'
G1 = +1.000%
G2 = -2.500%
e = -1.75'

"CONSTRUCTION RECORD DRAWINGS_8-01-2009

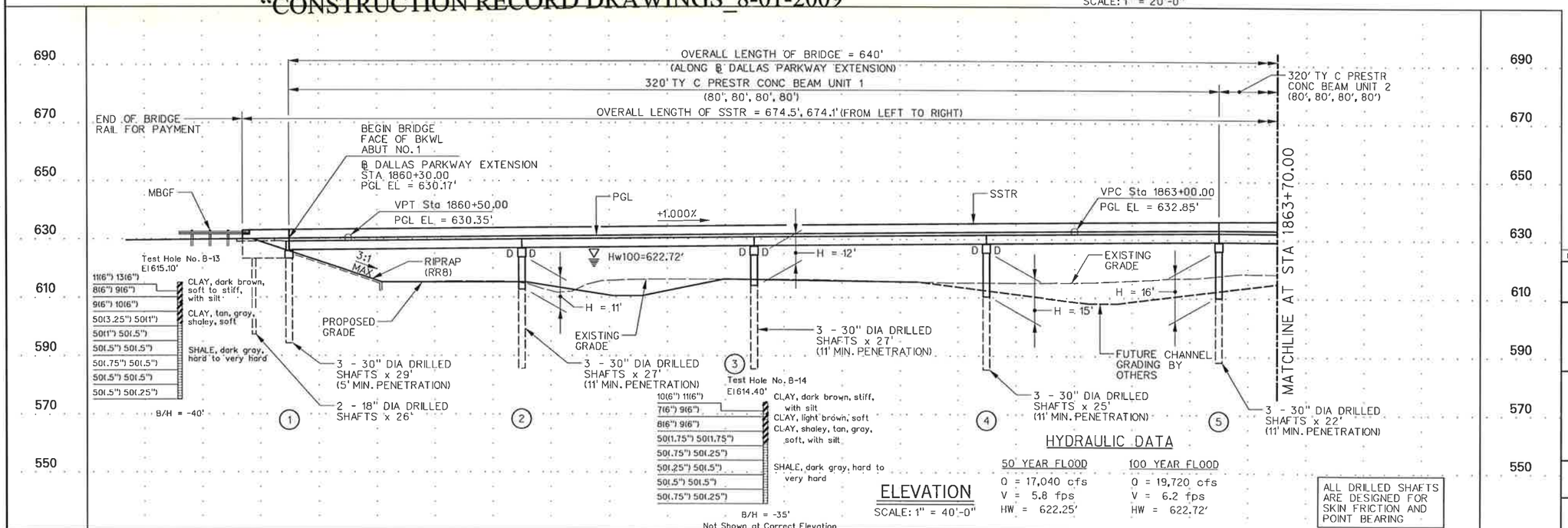

ELEVATION

SCALE: 1" = 40'-0"

HYDRAULIC DATA

50 YEAR FLOOD	100 YEAR FLOOD
Q = 17,040 cfs	Q = 19,720 cfs
V = 5.8 fps	V = 6.2 fps
HW = 622.25'	HW = 622.72'

ALL DRILLED SHAFTS ARE DESIGNED FOR SKIN FRICTION AND POINT BEARING

STATE OF TEXAS
CHONG KUK HONG
80621
LICENSED PROFESSIONAL ENGINEER
12-20-06

HL-93 LOADING

NO.	DATE	REVISION	APPROV.

DALLAS PARKWAY EXTENSION

COLLIN COUNTY

DOE BRANCH BRIDGE
BRIDGE LAYOUT

1 OF 2

Halff Associates, Inc.
ENGINEERS · ARCHITECTS · SCIENTISTS · PLANNERS · SURVEYORS

DRAWN	RCP	DATE	APRIL 2006	DESIGNED	CKH	DATE	NOV 2006
CHECKED	CLS	DATE	NOV 2006	SCALE	AS SHOWN		

CONTRACT NO. _____ SHEET 130 OF 271

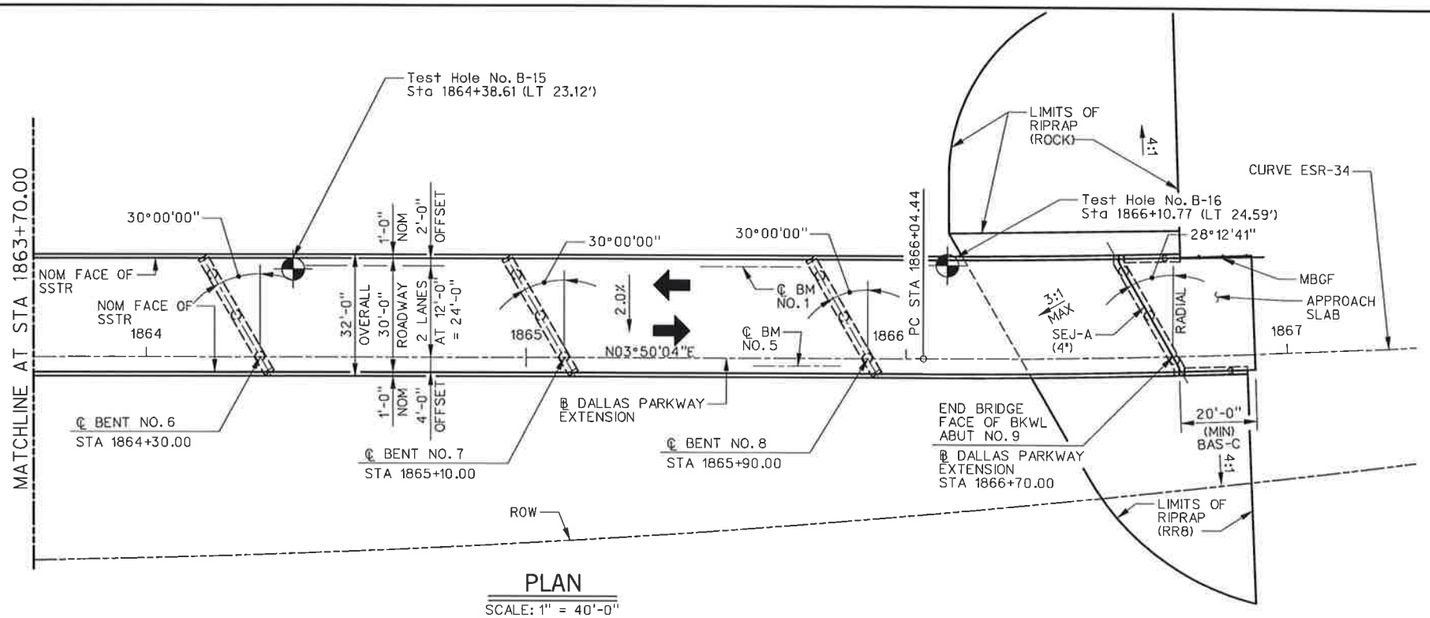

PLAN

SCALE: 1" = 40'-0"

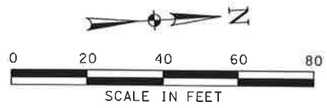

DALLAS PARKWAY EXTENSION VERTICAL CURVE DATA

VPI STA 1858+00.00
VPI EL = 627.85'
VC = 500.00'
G1 = -4.057%
G2 = +1.000%
e = 3.16'

VPI STA 1865+00.00
VPI EL = 634.85'
VC = 400.00'
G1 = +1.000%
G2 = -2.500%
e = -1.75'

CURVE ESR-34 DATA

PI STA 1868+33.34
Δ = 12°26'29.1387"(LT)
D = 02°43'42.13"
R = 2,100.00'
T = 228.901'
L = 456.002'
PC STA 1866+04.44
PT STA 1870+60.44

ALL ABUTMENTS AND BENTS ARE ON BEARING N63°50'04"E

"CONSTRUCTION RECORD DRAWINGS_8-01-2009

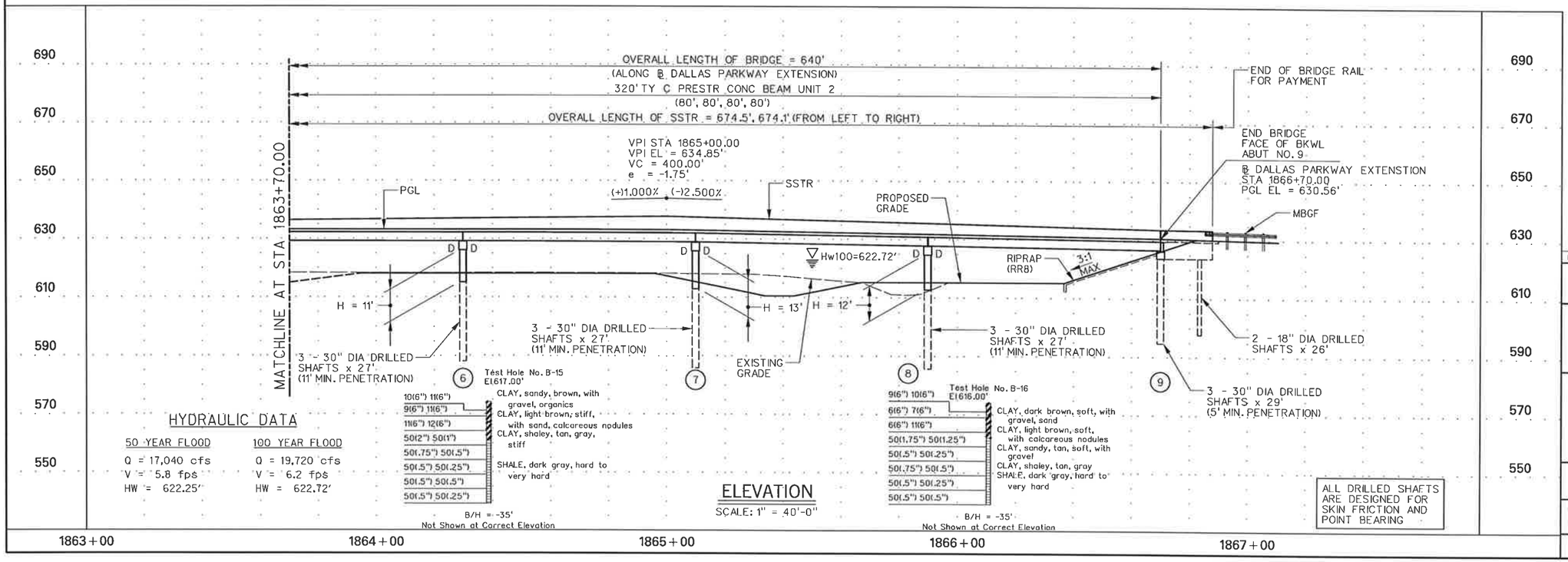

ELEVATION

SCALE: 1" = 40'-0"

HYDRAULIC DATA

50 YEAR FLOOD	100 YEAR FLOOD
Q = 17,040 cfs	Q = 19,720 cfs
V = 5.8 fps	V = 6.2 fps
HW = 622.25'	HW = 622.72'

ALL DRILLED SHAFTS ARE DESIGNED FOR SKIN FRICTION AND POINT BEARING

HL-93 LOADING

NO.	DATE	REVISION	APPROV.

DALLAS PARKWAY EXTENSION

COLLIN COUNTY

DOE BRANCH BRIDGE
BRIDGE LAYOUT

2 OF 2

Halff Associates, Inc.
ENGINEERS · ARCHITECTS · SCIENTISTS · PLANNERS · SURVEYORS

DRAWN RCP DATE APRIL 2006 DESIGNED CKH DATE NOV 2006
CHECKED DDS DATE NOV 2006 SCALE AS SHOWN

CONTRACT NO. _____ SHEET 131 OF 271

STATE OF TEXAS
CHONG KUK HONG
80621
LICENSED
PROFESSIONAL ENGINEER
12-20-06

SUMMARY OF ESTIMATED QUANTITIES

BRIDGE ELEMENT \ BID ITEM DESCRIPTION	416 DRILLED SHAFT FOUNDATIONS (18" ø)	416 DRILLED SHAFT FOUNDATIONS (30" ø)	420 CLASS "C" CONCRETE (ABUTMENT)	420 CLASS "C" CONCRETE (BENT)	420 CLASS "S" CONCRETE (APPROACH SLAB)	422 REINFORCED CONCRETE SLAB	425 PRESTRESSED CONCRETE BEAMS (TY C)	428 CONCRETE SURFACE TREATMENT	450 RAILING (SSTR)	454 SEALED EXPANSION JOINT SEJ-A (4")
	LF	LF	CY	CY	CY	SF	LF	SY	LF	LF
2 - Abutments	104	174	52.0		76.9 1				68.0	70
7 - Interior Bents		546		122.8 1						35
2 - 320.000' Prestr Conc Beam Unit						20,490	3,187.99	2,075	1,280.6	
Total	104	720	52.0	122.8 1	76.9 1	20,490	3,187.99	2,075	1,348.6	105

HL-93 LOADING

NO.	DATE	REVISION	APPROV.
1	1/19/07	ADDENDUM #1	D. SATRE

DALLAS PARKWAY EXTENSION

COLLIN COUNTY

SUMMARY OF ESTIMATED QUANTITIES

DOE BRANCH BRIDGE

Halff Associates, Inc.
ENGINEERS · ARCHITECTS · SCIENTISTS · PLANNERS · SURVEYORS

DRAWN RCP DATE
CHECKED CLS DATE NOV 2006
DESIGNED CKH DATE NOV 2006
SCALE AS SHOWN

CONTRACT NO.

SHEET 132 OF 271

"CONSTRUCTION RECORD DRAWINGS_8-01-2009

P-200612-01

i:\23000s\23819\CADD\Sheets\23819SSQQ01.dgn 3/19/2007 9:29:26 AM
9:29:26 AM User=dh17.50

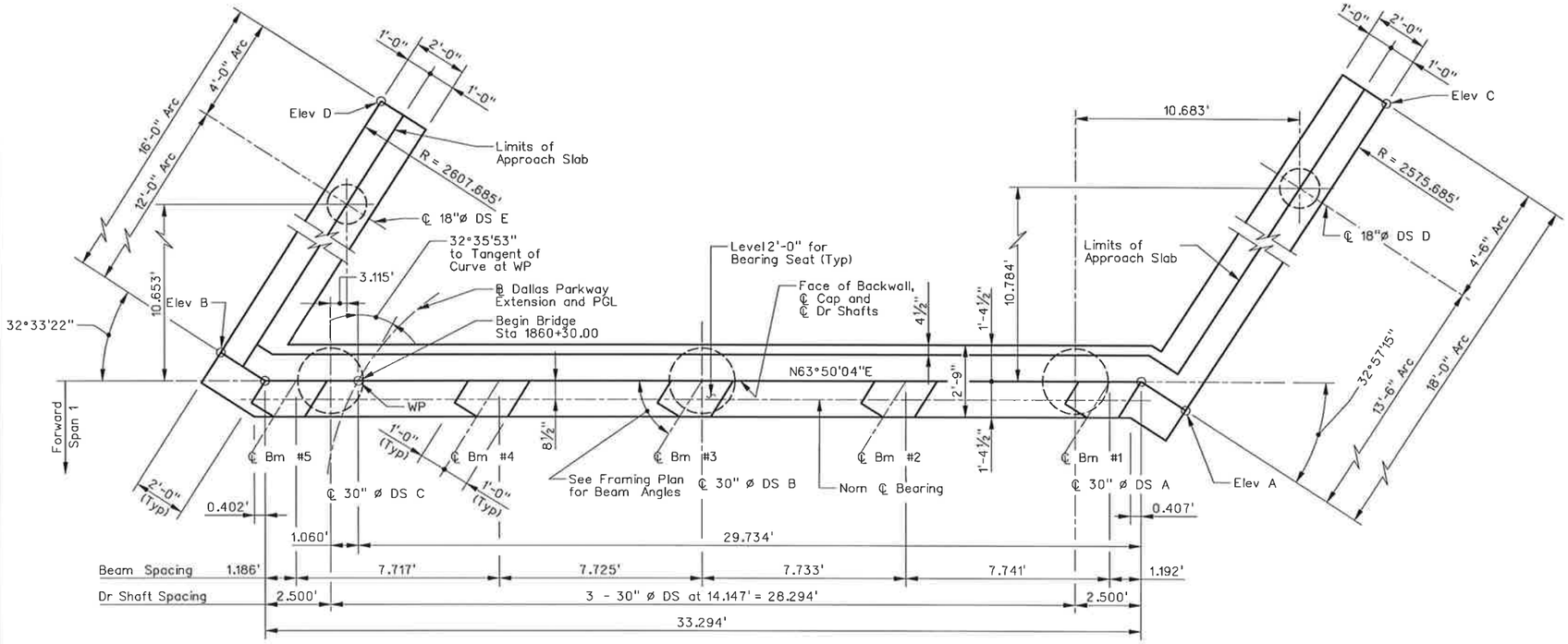

PLAN

Scale: 3/16" = 1'-0"

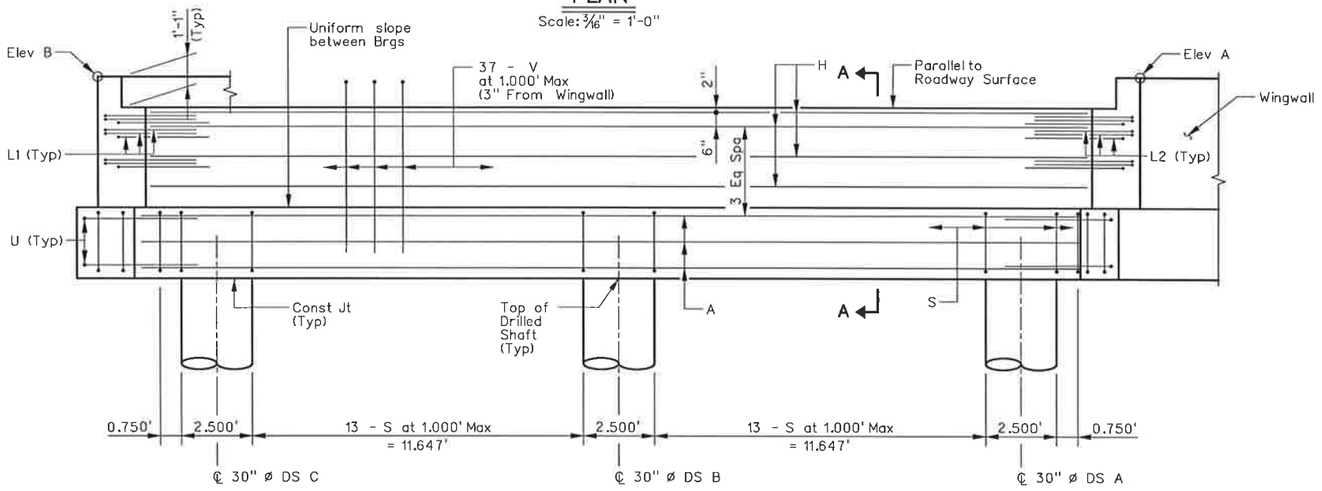

ELEVATION

Scale: 3/16" = 1'-0"

BAR SCHEDULE ~ ONE CAP

Bar	Type	No.	Size	Length	Weight
A	St	10	#11	33'-4"	1,771
H	St	8	#6	33'-4"	401
L1	Bt	9	#6	5'-9"	78
L2	Bt	9	#6	6'-0"	82
S	Bt	34	#4	9'-8"	220
U	Bt	4	#6	10'-9"	65
V	Bt	37	#5	11'-9"	454
wH1	St	7	#6	17'-0"	179
wH2	St	10	#6	15'-8"	236
wH3	St	7	#6	19'-0"	200
wH4	St	10	#6	17'-8"	266
wS	Bt	36	#4	7'-9"	187
wV	Bt	36	#5	12'-0"	451
Total Reinforcing Steel				LB	4,590
CIC Conc (Abut)				CY	26.3

ESTIMATED QUANTITIES

	ITEM	UNIT	QUANTITY
	DRILLED SHAFT (18 IN)	FT	52
	DRILLED SHAFT (30 IN)	FT	87
	CL C CONC (ABUT)	CY	26.3
(1)	REINF STL	LB	4,590

(1) For contractor's information only.

General Notes:
Concrete strength f'c= 3,600 psi.
The price bid per foot of DRILL SHAFT shall include the reinforcing extending from the shaft into the cap.
Spiral steel shall have one extra turn at the top, bottom, and at splices.
All Cap and Wall reinforcing shall be Grade 60.
Drilled Shaft reinforcing may be Grade 40.
The Bearing Seats shall receive a wood float finish.
Calculated Drilled Shaft Foundation Load
= 90 Tons/Drilled Shaft and
= 10 Tons/Wingwall Drilled Shaft.

STATE OF TEXAS
CHONG KUK HONG
80621
LICENSED PROFESSIONAL ENGINEER
12-20-06

HL-93 LOADING

BEARING SEAT ELEVATIONS

Abutment	Station	Bm #1	Bm #2	Bm #3	Bm #4	Bm #5
1	1860+30.00	626.065	625.963	625.863	625.765	625.668

CONTROL ELEVATIONS

Abutment	Station	Top of Abutment				Top of Drilled Shafts				
		Elev A	Elev B	Elev C	Elev D	DS A	DS B	DS C	DS D	DS E
1	1860+30.00	630.59	630.09	630.50	629.97	623.42	623.24	623.06	623.41	622.89

"CONSTRUCTION RECORD DRAWINGS_8-01-2009

NO.	DATE	REVISION	APPROV.

DALLAS PARKWAY EXTENSION

COLLIN COUNTY

DOE BRANCH BRIDGE
ABUTMENT 1 DETAILS

DOE BRANCH BRIDGE 1 OF 3

Halff Associates, Inc.
ENGINEERS · ARCHITECTS · SCIENTISTS · PLANNERS · SURVEYORS

DRAWN RDB DATE APRIL 2006 | DESIGNED CKH DATE NOV 2006
CHECKED DDS DATE NOV 2006 | SCALE AS SHOWN

CONTRACT NO. SHEET 33 OF 271

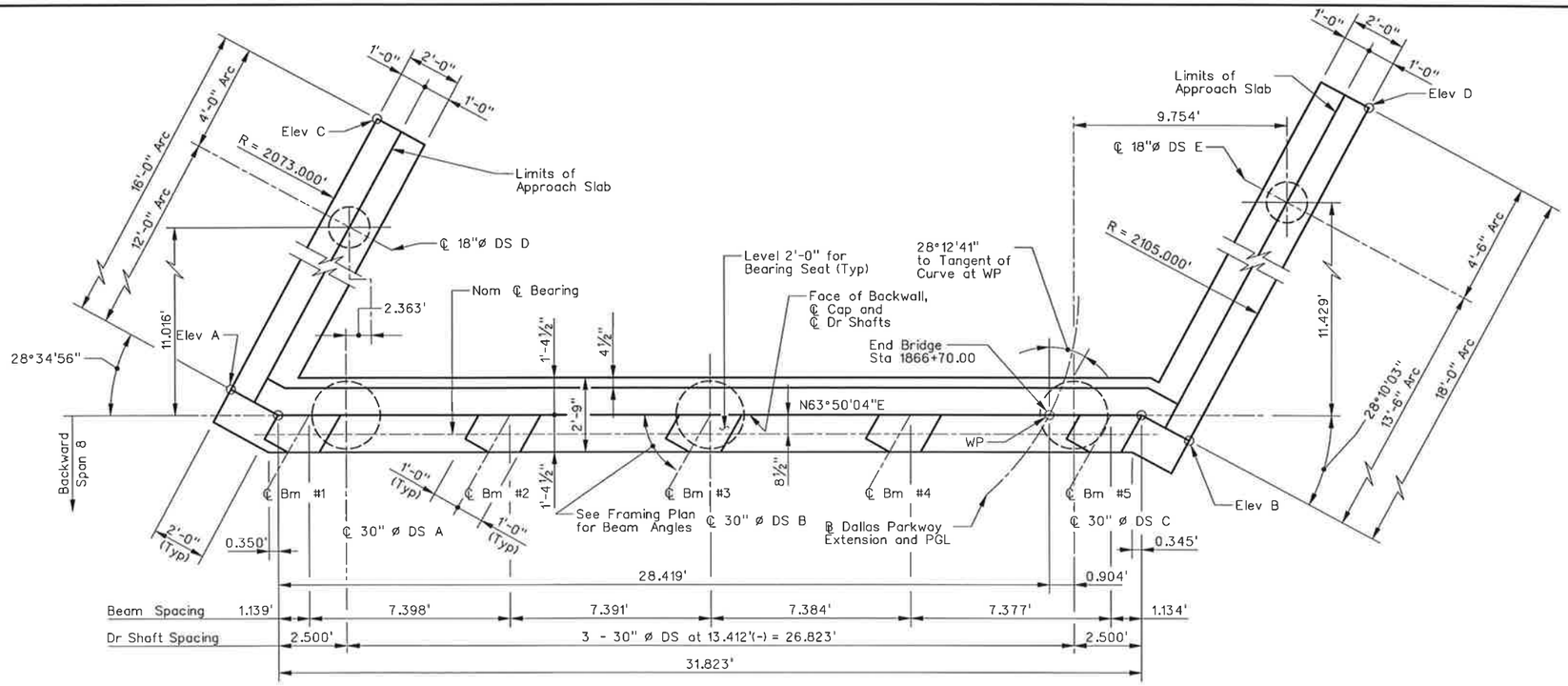

PLAN
Scale: 3/16" = 1'-0"

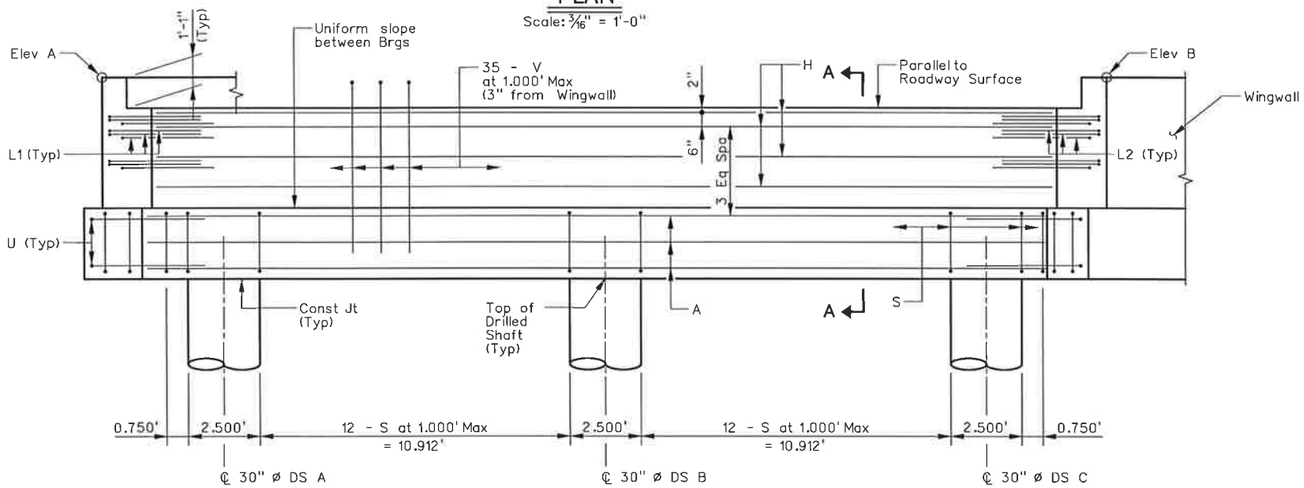

ELEVATION
Scale: 3/16" = 1'-0"

BEARING SEAT ELEVATIONS

Abutment	Station	Bm #1	Bm #2	Bm #3	Bm #4	Bm #5
9	1866+70.00	626.863	626.657	626.451	626.243	626.036

CONTROL ELEVATIONS

Abutment	Station	Top of Abutment				Top of Drilled Shafts				
		Elev A	Elev B	Elev C	Elev D	DS A	DS B	DS C	DS D	DS E
9	1866+70.00	631.40	630.42	631.04	630.01	624.20	623.82	623.45	624.03	623.01

"CONSTRUCTION RECORD DRAWINGS_8-01-2009

BAR SCHEDULE ~ ONE CAP

Bar	Type	No.	Size	Length	Weight
A	St	10	#11	31'-10"	1,692
H	St	8	#6	31'-10"	383
L1	Bt	9	#6	5'-9"	78
L2	Bt	9	#6	6'-0"	82
S	Bt	32	#4	9'-8"	207
U	Bt	4	#6	10'-9"	65
V	Bt	35	#5	11'-9"	429
wH1	St	7	#6	17'-0"	179
wH2	St	10	#6	15'-8"	236
wH3	St	7	#6	19'-0"	200
wH4	St	10	#6	17'-8"	266
wS	Bt	36	#4	7'-9"	187
wV	Bt	36	#5	12'-0"	451
Total Reinforcing Steel				LB	4,455
CIC Conc (Abut)				CY	25.7

ESTIMATED QUANTITIES

	ITEM	UNIT	QUANTITY
	DRILLED SHAFT (18 IN)	FT	52
	DRILLED SHAFT (30 IN)	FT	87
	CL C CONC (ABUT)	CY	25.7
(1)	REINF STL	LB	4,455

(1) For contractor's information only.

General Notes:
Concrete strength f'c= 3,600 psi.
The price bid per foot of DRILL SHAFT shall include the reinforcing extending from the shaft into the cap.
Spiral steel shall have one extra turn at the top, bottom, and at splices.
All Cap and Wall reinforcing shall be Grade 60.
Drilled Shaft reinforcing may be Grade 40.
The Bearing Seats shall receive a wood float finish.
Calculated Drilled Shaft Foundation Load
= 90 Tons/Drilled Shaft and
= 10 Tons/Wingwall Drilled Shaft.

STATE OF TEXAS
CHONG KUK HONG
80621
LICENSED PROFESSIONAL ENGINEER
12-20-06

HL-93 LOADING

NO.	DATE	REVISION	APPROV.

DALLAS PARKWAY EXTENSION

COLLIN COUNTY

DOE BRANCH BRIDGE
ABUTMENT 9 DETAILS

DOE BRANCH BRIDGE 2 OF 3

Halff Associates, Inc.
ENGINEERS · ARCHITECTS · SCIENTISTS · PLANNERS · SURVEYORS

DRAWN RCP DATE
CHECKED CLS DATE NOV 2006
DESIGNED CKH DATE NOV 2006
SCALE AS SHOWN

CONTRACT NO. SHEET 134 OF 271

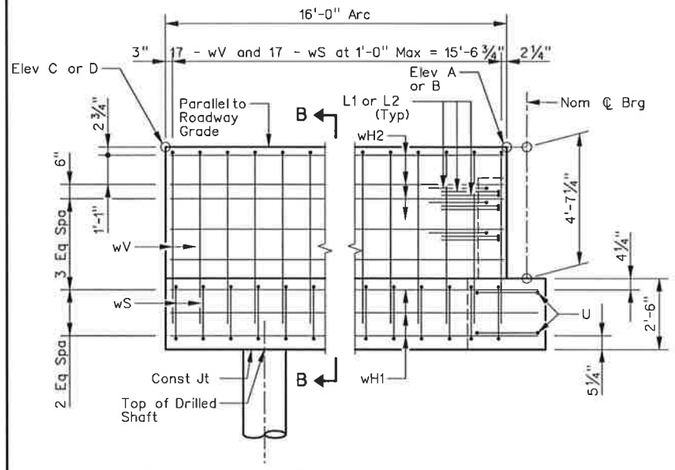

WINGWALL L1 AND L8 ELEVATION

Scale: 3/16" = 1'-0"

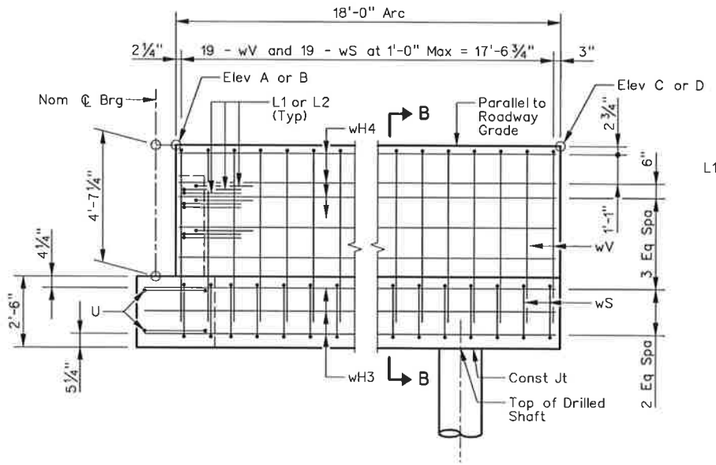

WINGWALL R1 AND R8 ELEVATION

Scale: 3/16" = 1'-0"

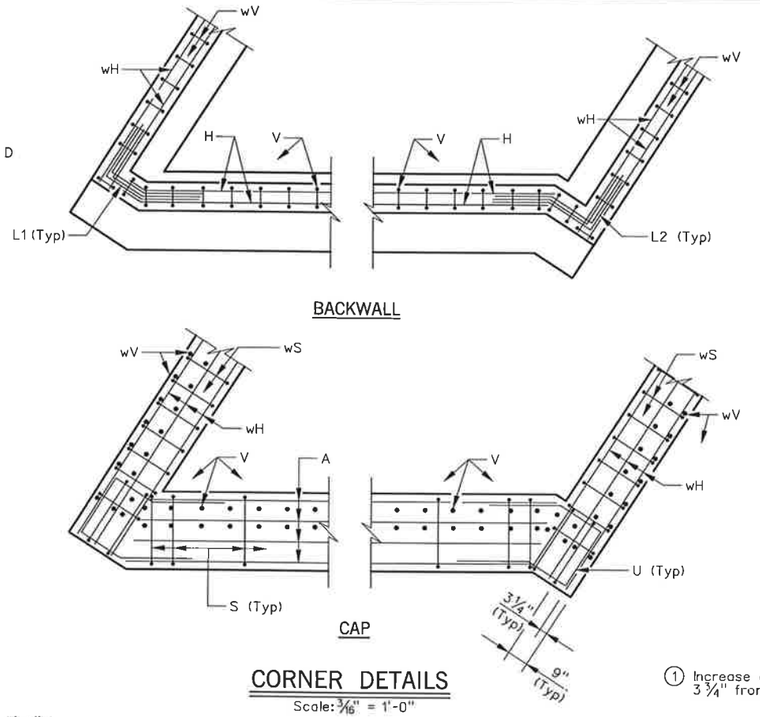

CORNER DETAILS

Scale: 3/16" = 1'-0"

① Increase as required to maintain 3 1/4" from Finished Grade.

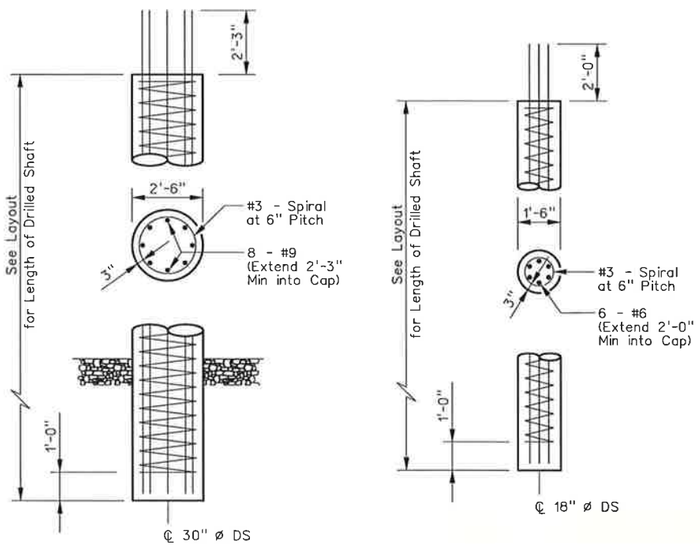

DRILLED SHAFT DETAILS

Scale: 3/16" = 1'-0"

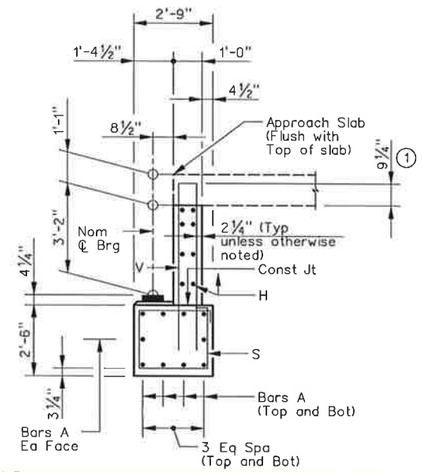

SECTION A–A

Scale: 3/16" = 1'-0"

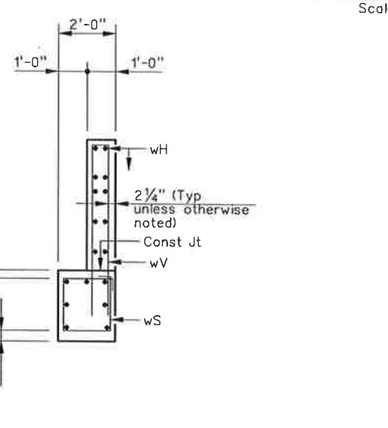

SECTION B–B

Scale: 3/16" = 1'-0"

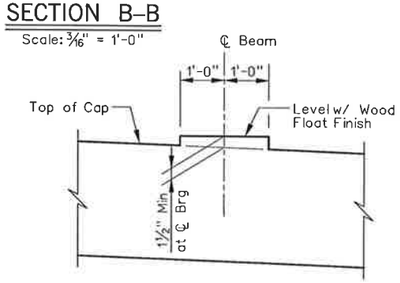

BEARING SEAT DETAILS

(BEARING SURFACE SHALL BE CLEAN AND FREE OF ALL LOOSE MATERIAL BEFORE PLACING BEARING PAD)

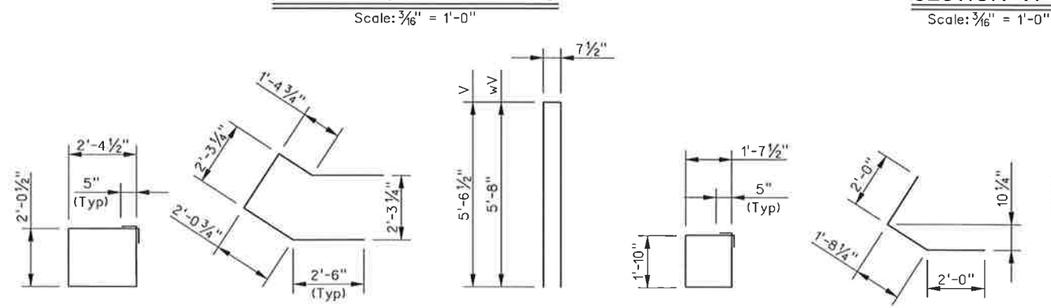

"CONSTRUCTION RECORD DRAWINGS_8-01-2009

HL-93 LOADING

CHONG KUK HONG 80621 LICENSED PROFESSIONAL ENGINEER STATE OF TEXAS

12-20-06

NO.	DATE	REVISION	APPROV.

DALLAS PARKWAY EXTENSION

COLLIN COUNTY

DOE BRANCH BRIDGE ABUTMENT DETAILS

DOE BRANCH BRIDGE 3 OF 3

Halff Associates, Inc.
ENGINEERS · ARCHITECTS · SCIENTISTS · PLANNERS · SURVEYORS

DRAWN RCP DATE | DESIGNED CKH DATE NOV 2006
CHECKED CLS DATE NOV 2006 | SCALE AS SHOWN

CONTRACT NO. SHEET 135 OF 271

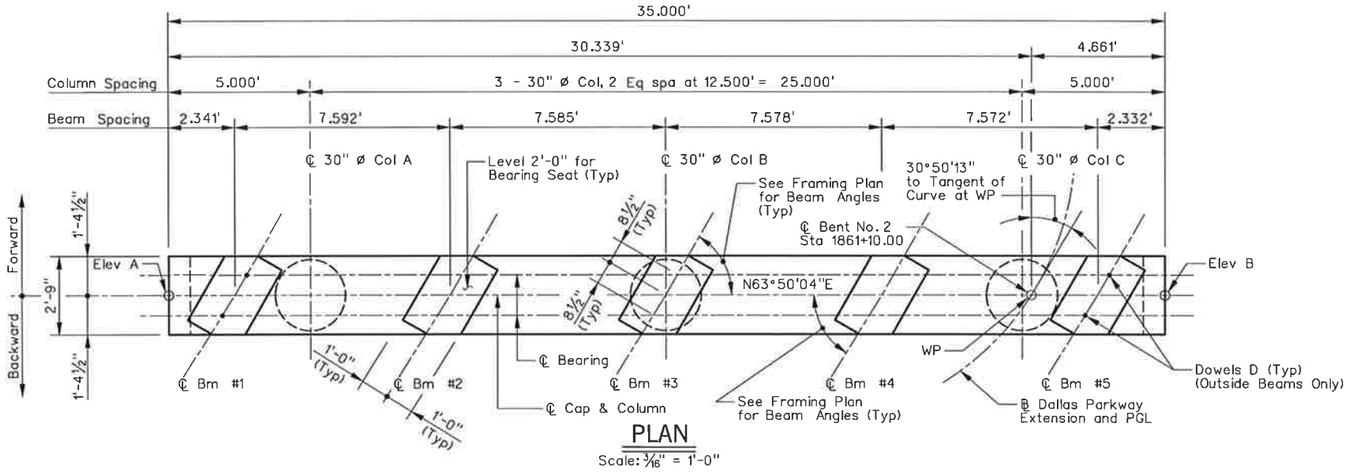

PLAN

Scale: 3/16" = 1'-0"

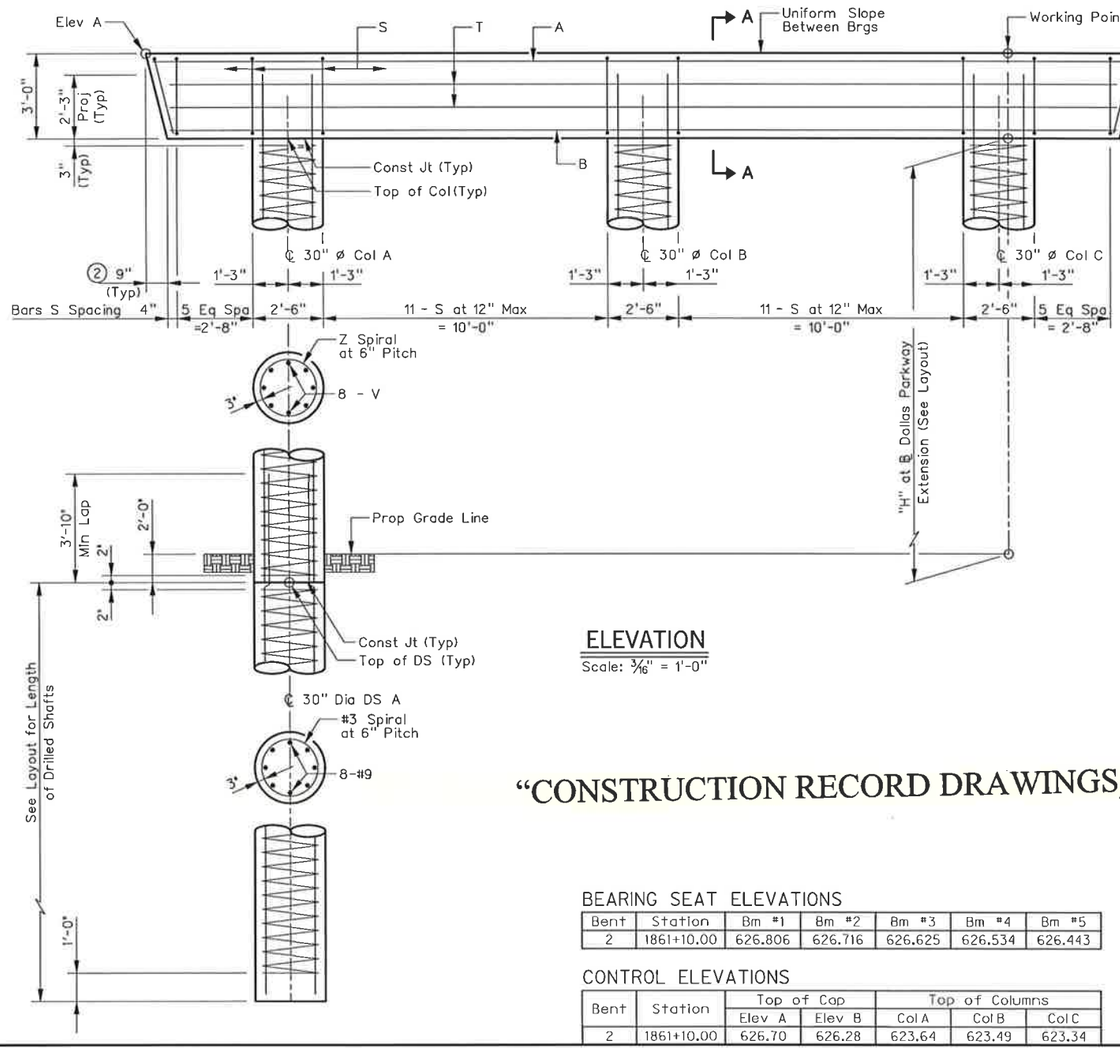

ELEVATION

Scale: 3/16" = 1'-0"

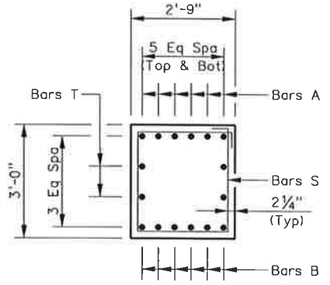

SECTION A-A

Scale: ¼" = 1'-0"

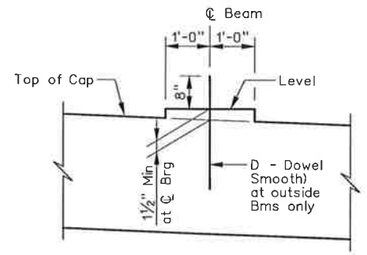

BEARING SEAT DETAILS

(BEARING SURFACE SHALL BE CLEAN AND FREE OF ALL LOOSE MATERIAL BEFORE PLACING BEARING PAD)

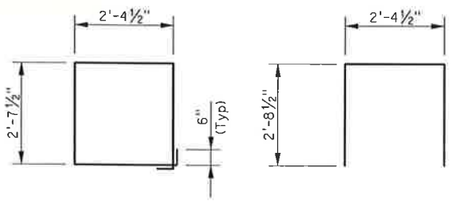

BARS S BARS U

BAR SCHEDULE ~ ONE CAP

Bar	Type	No.	Size	Length	Weight
A	St	6	#11	34'-6"	1,100
B	St	6	#11	33'-3"	1,060
D	St	4	1¼"ø	1'-8"	28
S	Bt	34	#5	11'-0"	391
T	St	4	#5	33'-3"	139
U	Bt	2	#5	7'-10"	17
Total Reinforcing Steel				LB	2,735
CIC Conc (Bent)				CY	10.6

COLUMN SCHEDULE ~ ONE COLUMN

"H"	Bars V~8-#9		Bars Z~#3 Spiral		Est Quant~3 Col Reinf Steel	Est Quant~3 Col Class C Concrete
FT	Length	Weight	Length	Weight	LB	CY
9	11'-3"	306	100'	38	1,032	4.9
10	12'-3"	334	111'	42	1,128	5.4
11	13'-3"	361	121'	46	1,221	5.9
12	14'-3"	388	132'	50	1,314	6.5
13	15'-3"	415	142'	54	1,407	7.0

Adjust spiral Z length by 5.3 Ft. and bars V length by 0.5 Ft. for each 0.5 Ft. variation in "H" value.
Adjust Estimated Quantity of Concrete for each column by 0.09 CY for each 0.5 Ft. variation in "H" value.
Adjust Estimated Quantity of Reinforcing Steel for each column by 16.0 Lb for each 0.5 Ft. variation in "H" value.

ESTIMATED QUANTITIES

	ITEM	UNIT	QUANTITY
	DRILLED SHAFT (30 IN)	FT	81
	CL C CONC (BENT)	CY	16.5
(1)	REINF STL	LB	3,956

(1) For contractor's information only.
(2) Measured parallel to top of cap cross-slope.

General Notes:
Concrete strength f'c= 3,600 psi.
The price bid per foot of column shall include the reinforcing extending from the shaft into the cap.
Spiral steel shall have one extra turn at the top, bottom, and at splices.
All Cap reinforcing shall be Grade 60.
Column and Drilled Shaft reinforcing may be Grade 40.
Cap form supports shall remain in place until entire cap is ready for form removal.
The Bearing Seats shall receive a wood float finish.
Calculated Drilled Shaft Foundation Load = 155 Tons/Drilled Shaft.

STATE OF TEXAS
CHONG KUK HONG
80621
LICENSED PROFESSIONAL ENGINEER
12-20-06

HL-93 LOADING

NO.	DATE	REVISION	APPROV.

"CONSTRUCTION RECORD DRAWINGS_8-01-2009

BEARING SEAT ELEVATIONS

Bent	Station	Bm #1	Bm #2	Bm #3	Bm #4	Bm #5
2	1861+10.00	626.806	626.716	626.625	626.534	626.443

CONTROL ELEVATIONS

Bent	Station	Top of Cap		Top of Columns		
		Elev A	Elev B	Col A	Col B	Col C
2	1861+10.00	626.70	626.28	623.64	623.49	623.34

DALLAS PARKWAY EXTENSION

COLLIN COUNTY

DOE BRANCH BRIDGE
BENT 2 DETAILS

DOE BRANCH BRIDGE

Halff Associates, Inc.
ENGINEERS · ARCHITECTS · SCIENTISTS · PLANNERS · SURVEYORS

DRAWN RCP	DATE	DESIGNED CKH	DATE NOV 2006
CHECKED CLS	DATE NOV 2006	SCALE AS SHOWN	

CONTRACT NO. SHEET 136 OF 271

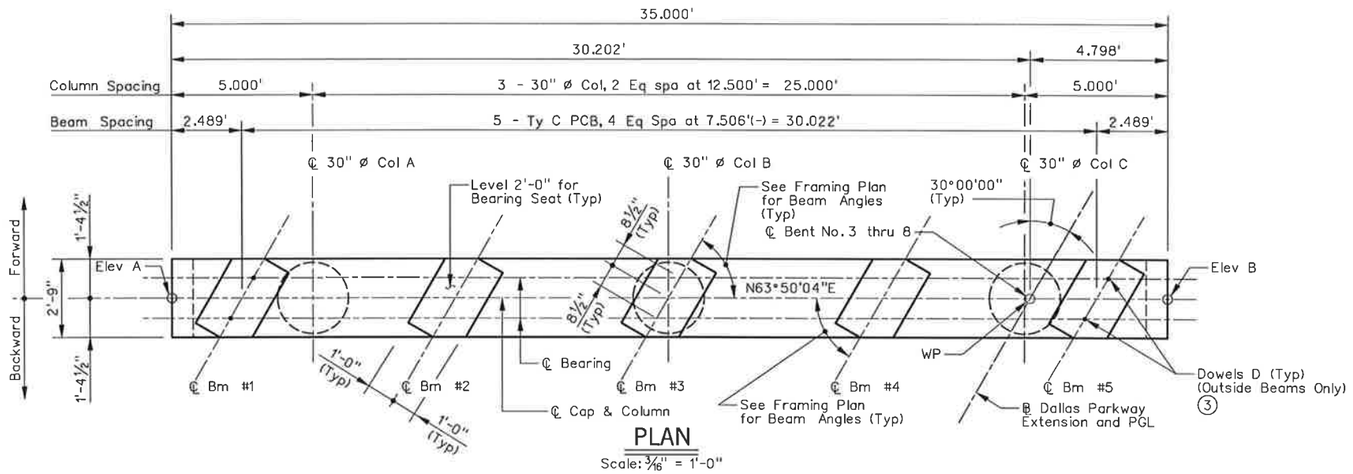

PLAN
Scale: 3/16" = 1'-0"

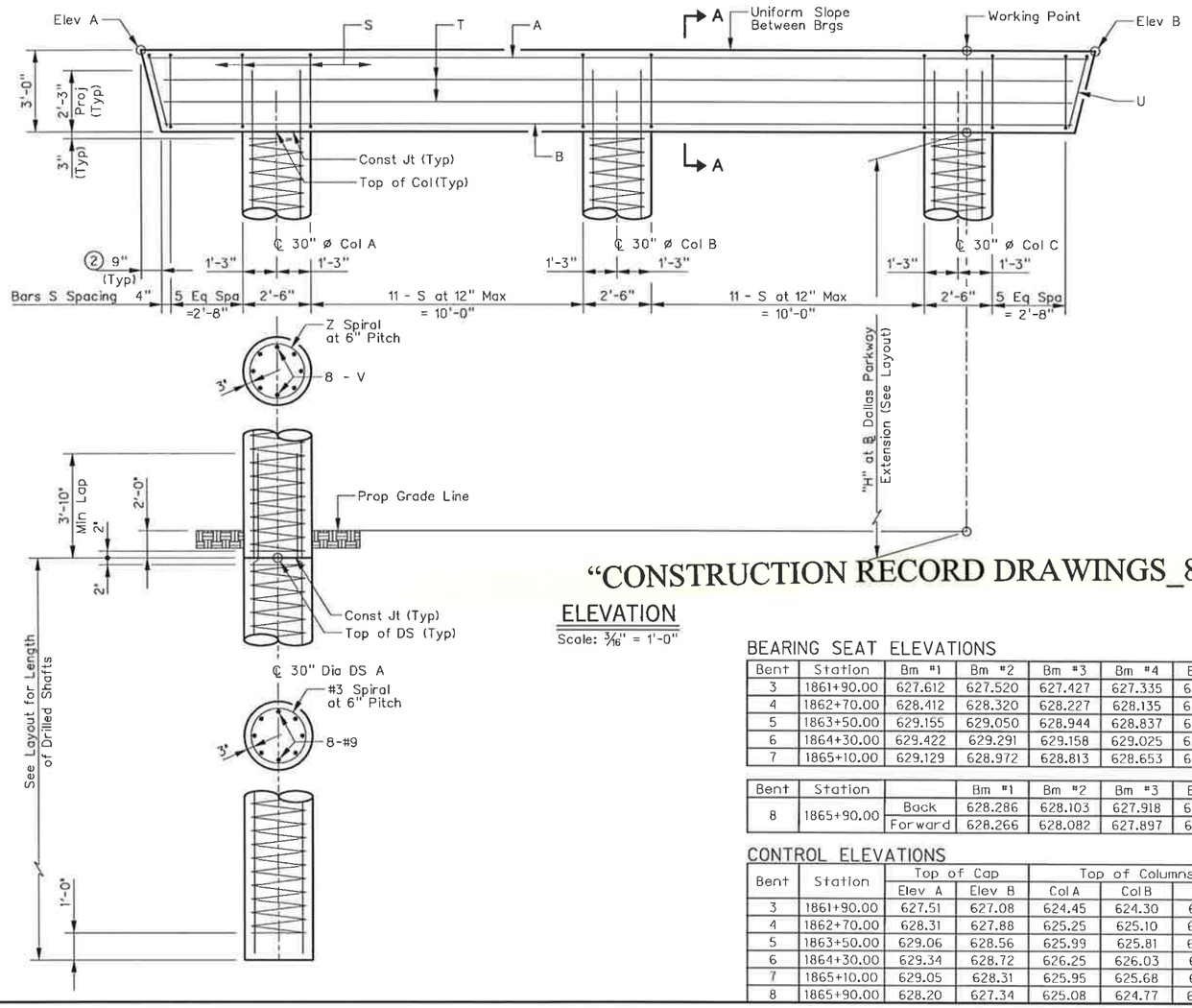

ELEVATION
Scale: 3/16" = 1'-0"

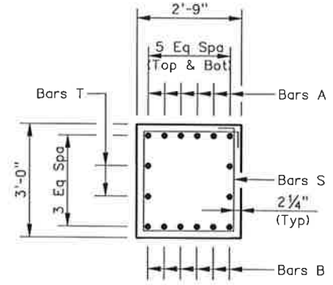

SECTION A-A
Scale: ¼" = 1'-0"

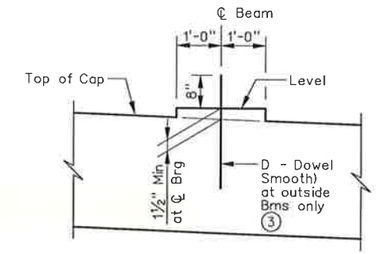

BEARING SEAT DETAILS

(BEARING SURFACE SHALL BE CLEAN AND FREE OF ALL LOOSE MATERIAL BEFORE PLACING BEARING PAD)

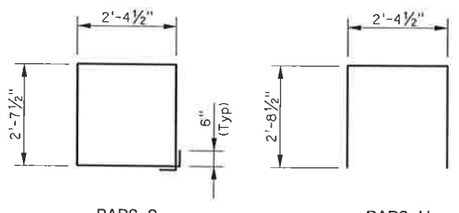

BARS S BARS U

BAR SCHEDULE ~ ONE CAP

Bar	Type	No.	Size	Length	Weight
A	St	6	#11	34'-6"	1,100
B	St	6	#11	33'-3"	1,060
③ D	St	4	1¼"ø	1'-8"	28
S	Bt	34	#5	11'-0"	391
T	St	4	#5	33'-3"	139
U	Bt	2	#5	7'-10"	17
Total Reinforcing Steel				LB	2,735
CIC Conc (Bent)				CY	10.6

COLUMN SCHEDULE ~ ONE COLUMN

					Est Quant~3 Col	
	Bars V~8-#9		Bars Z~#3 Spiral		Reinf Steel	Class C Concrete
"H" FT	Length	Weight	Length	Weight	LB	CY
10	12'-3"	334	111'	42	1,128	5.4
11	13'-3"	361	121'	46	1,221	5.9
12	14'-3"	388	132'	50	1,314	6.5
13	15'-3"	415	142'	54	1,407	7.0
14	16'-3"	442	153'	58	1,500	7.6
15	17'-3"	470	164'	62	1,596	8.1
16	18'-3"	497	174'	66	1,689	8.7
17	19'-3"	524	185'	70	1,782	9.2

Adjust spiral Z length by 5.3 Ft. and bars V length by 0.5 Ft. for each 0.5 Ft. variation in "H" value.
Adjust Estimated Quantity of Concrete for each column by 0.09 CY for each 0.5 Ft. variation in "H" value.
Adjust Estimated Quantity of Reinforcing Steel for each column by 16.0 Lb for each 0.5 Ft. variation in "H" value.

ESTIMATED QUANTITIES

ITEM	UNIT	BENT 3	BENT 4	BENT 5	BENT 6	BENT 7	BENT 8
DRILLED SHAFT (30 IN)	FT	81	75	66	81	81	81
CL C CONC (BENT)	CY	17.1	18.7	19.3	16.5	17.6	17.1
① REINF STL	LB	4,049	4,331	4,424	3,956	4,142	4,049

① For contractor's information only.
② Measured parallel to top of cap cross-slope.
③ Omit DowelD at Bent 5

General Notes:
Concrete strength f'c= 3'600 psi.
The price bid per foot of column shall include the reinforcing extending from the shaft into the cap.
Spiral steel shall have one extra turn at the top, bottom, and at splices.
All Cap reinforcing shall be Grade 60.
Column and Drilled Shaft reinforcing may be Grade 40.
Cap form supports shall remain in place until entire cap is ready for form removal.
The Bearing Seats shall receive a wood float finish.
Calculated Drilled Shaft Foundation Load = 155 Tons/Drilled Shaft.

STATE OF TEXAS
CHONG KUK HONG
80621
LICENSED PROFESSIONAL ENGINEER
12-20-06

HL-93 LOADING

BEARING SEAT ELEVATIONS

Bent	Station	Bm #1	Bm #2	Bm #3	Bm #4	Bm #5
3	1861+90.00	627.612	627.520	627.427	627.335	627.242
4	1862+70.00	628.412	628.320	628.227	628.135	628.042
5	1863+50.00	629.155	629.050	628.944	628.837	628.728
6	1864+30.00	629.422	629.291	629.158	629.025	628.890
7	1865+10.00	629.129	628.972	628.813	628.653	628.492

Bent	Station		Bm #1	Bm #2	Bm #3	Bm #4	Bm #5
8	1865+90.00	Back	628.286	628.103	627.918	627.732	627.545
		Forward	628.266	628.082	627.897	627.710	627.523

CONTROL ELEVATIONS

Bent	Station	Top of Cap		Top of Columns		
		Elev A	Elev B	Col A	Col B	Col C
3	1861+90.00	627.51	627.08	624.45	624.30	624.14
4	1862+70.00	628.31	627.88	625.25	625.10	624.94
5	1863+50.00	629.06	628.56	625.99	625.81	625.63
6	1864+30.00	629.34	628.72	626.25	626.03	625.81
7	1865+10.00	629.05	628.31	625.95	625.68	625.41
8	1865+90.00	628.20	627.34	625.08	624.77	624.46

"CONSTRUCTION RECORD DRAWINGS_8-01-2009

NO.	DATE	REVISION	APPROV.

DALLAS PARKWAY EXTENSION

COLLIN COUNTY

DOE BRANCH BRIDGE
BENTS 3 – 8 DETAILS

DOE BRANCH BRIDGE

Halff Associates, Inc.
ENGINEERS · ARCHITECTS · SCIENTISTS · PLANNERS · SURVEYORS

DRAWN	RCP	DESIGNED	CKH
CHECKED	CLS	DATE	NOV 2006
DATE	NOV 2006	SCALE	AS SHOWN

CONTRACT NO. _____ SHEET 137 OF 271

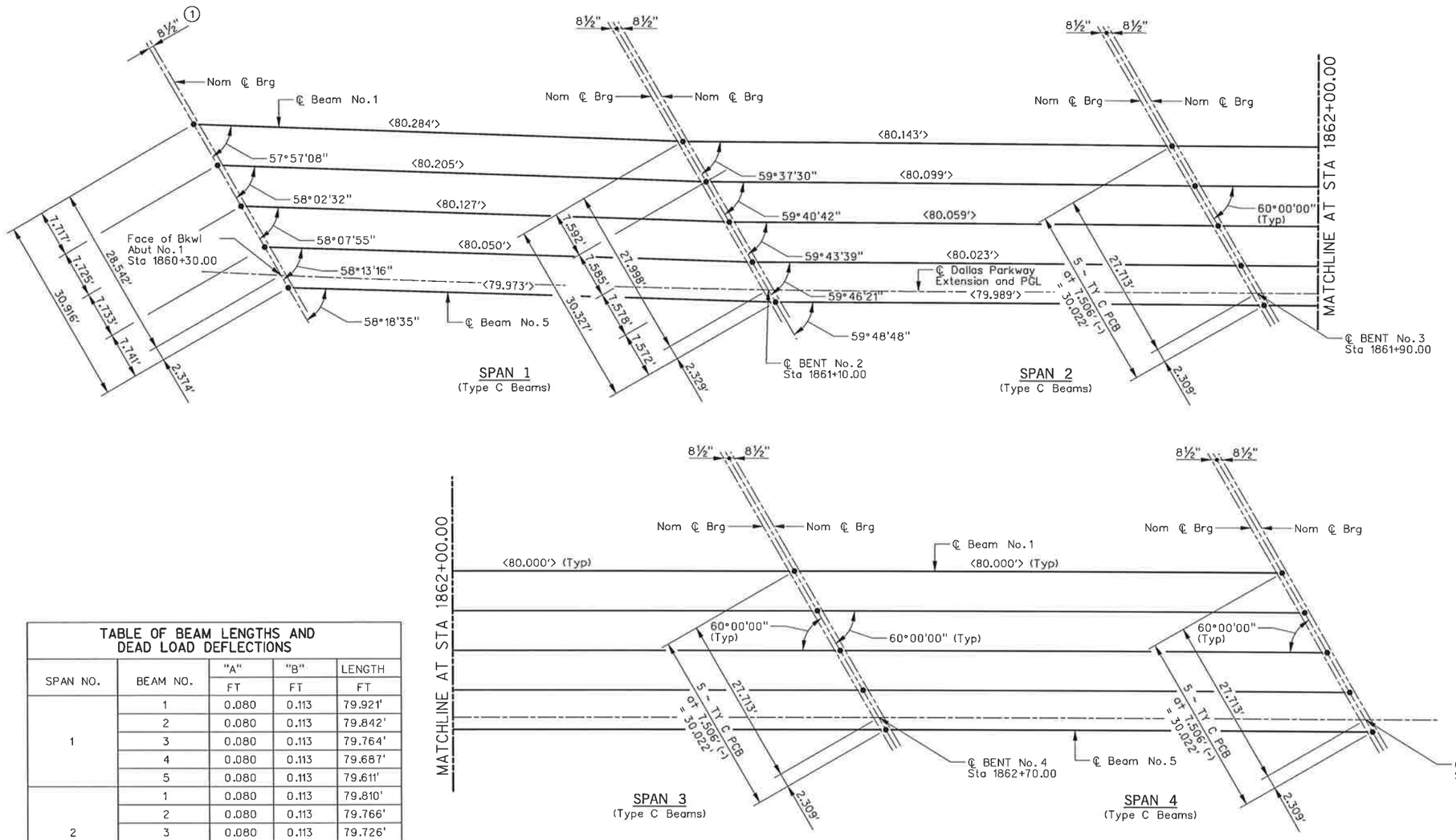

PLAN

SCALE: 1" = 20'-0"

Dimensions shown thus <xxx.xxx'> represent horizontal beam length from Face of Abut Bkwl to centerline of Bent or from centerline to centerline of Bents.

TABLE OF BEAM LENGTHS AND DEAD LOAD DEFLECTIONS				
SPAN NO.	BEAM NO.	"A" FT	"B" FT	LENGTH FT
1	1	0.080	0.113	79.921'
	2	0.080	0.113	79.842'
	3	0.080	0.113	79.764'
	4	0.080	0.113	79.687'
	5	0.080	0.113	79.611'
2	1	0.080	0.113	79.810'
	2	0.080	0.113	79.766'
	3	0.080	0.113	79.726'
	4	0.080	0.113	79.689'
	5	0.080	0.113	79.656'
3	ALL	0.080	0.113	79.667'
4	ALL	0.080	0.113	79.667'

All beam lengths are horizontal length end to end of beam.

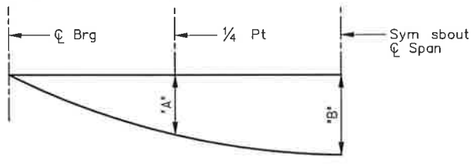

NOTE: Deflections shown are due to concrete slab only. (E_c = 5 x 10^6 psi) Calculated deflections shown are theoretical and actual dimensions may be less. Deflections shall be adjusted based on field observations.

NOTES:

① See Standard IBEB for orientation of dimension.

"CONSTRUCTION RECORD DRAWINGS_8-01-2009

STATE OF TEXAS
CHONG KUK HONG
80621
LICENSED PROFESSIONAL ENGINEER
12-20-06

HL-93 LOADING

NO.	DATE	REVISION	APPROV.

DALLAS PARKWAY EXTENSION

COLLIN COUNTY

DOE BRANCH BRIDGE
FRAMING PLAN UNIT 1

Halff Associates, Inc.
ENGINEERS · ARCHITECTS · SCIENTISTS · PLANNERS · SURVEYORS

DRAWN	RCP	DESIGNED	CKH
DATE	APRIL 2006	DATE	NOV 2006
CHECKED	CLS	SCALE	AS SHOWN
DATE	NOV 2006		

CONTRACT NO. SHEET 38 OF 271

i:\23000s\23819\cadd\sheets\23819ssdp01.dgn

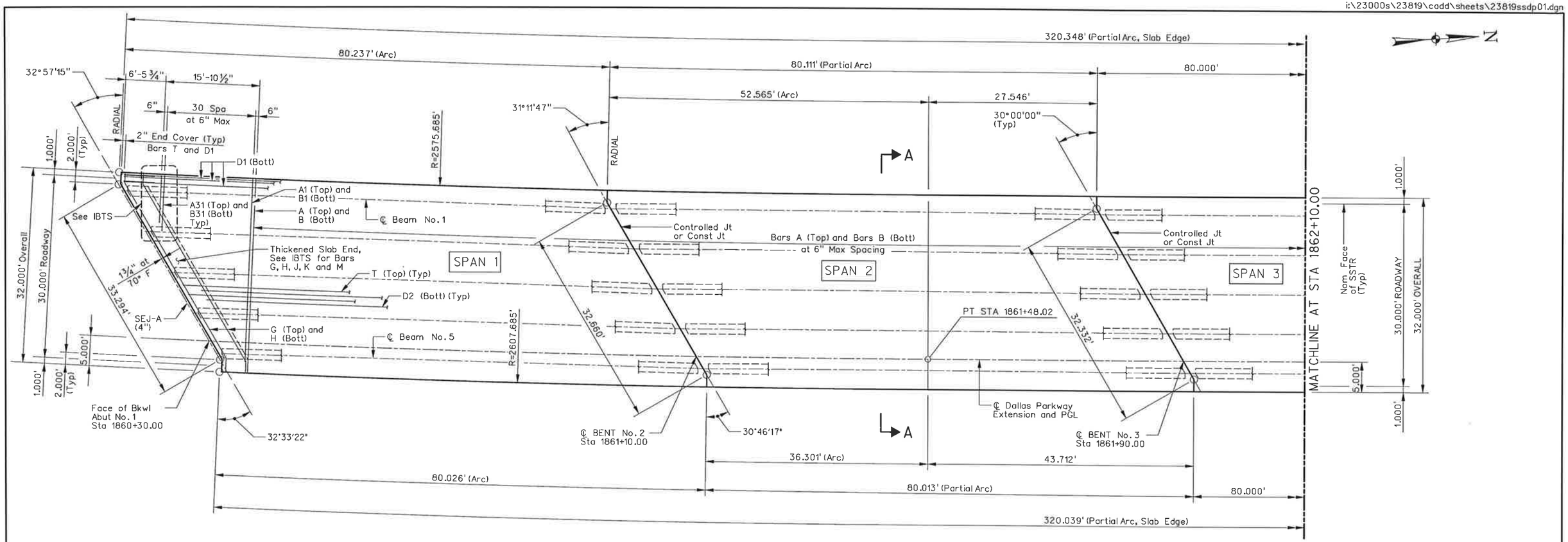

PLAN

SCALE: 1/16" = 1'-0"

General Notes:

All concrete shall be Class S, f'c = 4,000 psi

For beam, bearing pad, misc. slab and thickened slab end details not shown, see IBD, IBEB, IBMS and IBND.

For Sealed Expansion Joint details not shown, see SEJ-A.

For Sealed Expansion Joint Quanitites not shown, see Estimated Quantities sheet.

The minimum rate of concrete placing and finishing shall be not less than 30 feet of Bridge Deck per hour.

For rail details not shown see SSTR Rail.

For beam layouts, see Framing Plan sheets.

All reinforcing shall be Grade 60.

All reinforcing bars shall be epoxy coated.

Bar laps, where required, shall be as follows:

#4 = 2'-1"

#5 = 2'-7"

See PCP or PMDF (C) Standards for details and quantity adjustments if either of these options are used.

STATE OF TEXAS
CHONG KUK HONG
80621
LICENSED PROFESSIONAL ENGINEER
12-20-06

HL-93 LOADING

NO.	DATE	REVISION	APPROV.

DALLAS PARKWAY EXTENSION

COLLIN COUNTY

DOE BRANCH BRIDGE
DECK PLAN UNIT 1

1 OF 2

Halff Associates, Inc.
ENGINEERS · ARCHITECTS · SCIENTISTS · PLANNERS · SURVEYORS

DRAWN RCP	DATE APRIL 2006	DESIGNED CKH	DATE NOV 2006
CHECKED CLS	DATE NOV 2006	SCALE AS SHOWN	

CONTRACT NO. _____ SHEET 139 OF 271

"CONSTRUCTION RECORD DRAWINGS" 8-01-2009

i:\23000s\23819\cadd\sheets\23819ssdp01.dgn 12/20/2006 9:21:10 AM
9:21:10 AM
P-200612-01

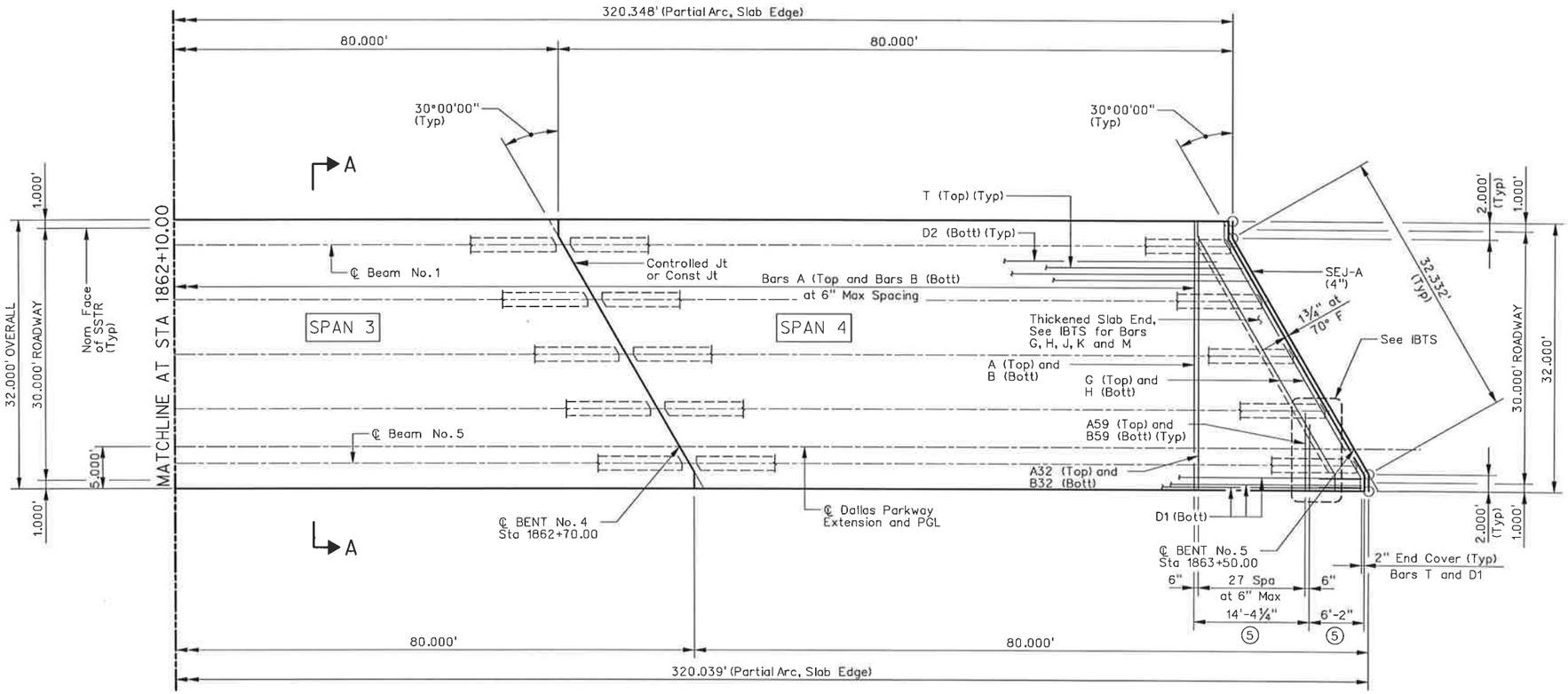

PLAN

SCALE: 1/16" = 1'-0"

⑤ Typical @ Bent No. 2, 3 and 4.

"CONSTRUCTION RECORD DRAWINGS_8-01-2009

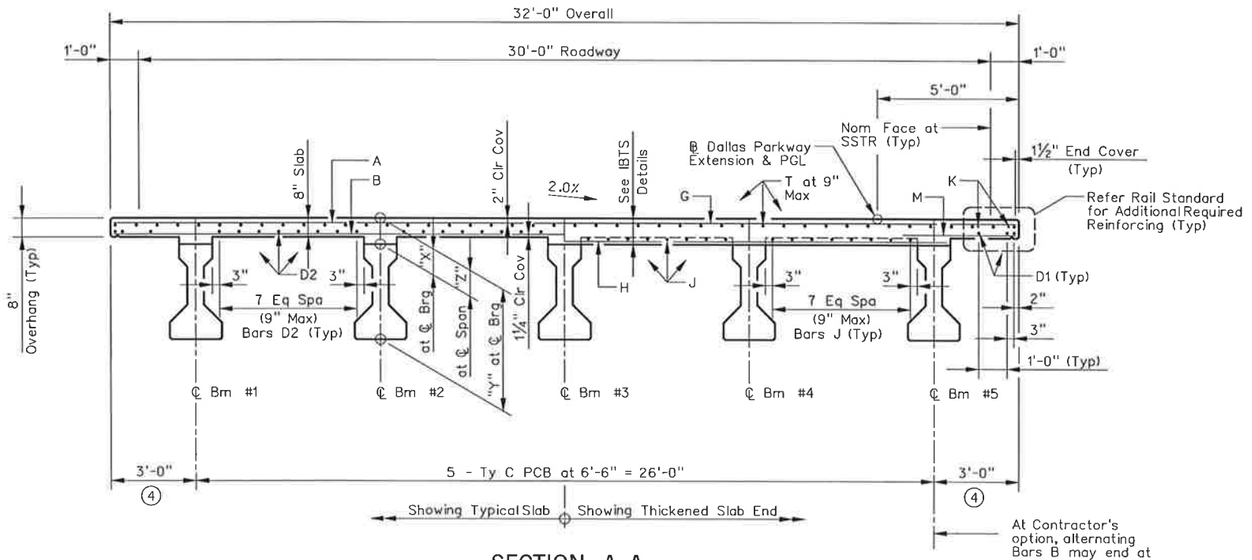

SECTION A-A

Scale: 3/16" = 1'-0"

④ Varies at Spans 1 and 2

BAR TABLE

Bar	Size
A	#5
AA	#5
B	#5
D	#5
G	#5
H	#5
J	#5
K	#5
M	#5
T	#4

TABLE OF SECTION DEPTHS

SPAN NO.	BEAM NO.	"X" AT ℄ BRG	"Y" AT ℄ BRG	③ "Z" AT ℄ SPAN
1	ALL	11"	4'-3"	8¾"
2, 3 and 4	ALL	11"	4'-3"	9⅝"

③ THEORETICAL DIMENSION

TABLE OF ESTIMATED QUANTITIES

SPAN	REINF CONCRETE SLAB	① PRESTR CONCRETE BEAMS (TY IV)	CLASS "S" CONCRETE	② REINF STEEL
NO.	SF	LF	CY	LB
1	2,565	398.84	64.7	16,673
2	2,562	398.67	63.8	16,653
3	2,560	398.35	63.8	16,640
4	2,560	398.35	64.6	16,640
TOTAL	10,247	1,594.21	256.9	66,606

① Lengths shown are bottom flange lengths with adjustments made for beam slope. See Framing Plan sheets for individual beam lengths.

② Reinforcing steel weight is calculated using an approximate factor of 6.5 Lbs/SF.

STATE OF TEXAS
CHONG KUK HONG
80621
LICENSED PROFESSIONAL ENGINEER
12-20-06

HL-93 LOADING

NO.	DATE	REVISION	APPROV.

DALLAS PARKWAY EXTENSION

COLLIN COUNTY

DOE BRANCH BRIDGE
DECK PLAN UNIT 1

2 OF 2

Halff Associates, Inc.
ENGINEERS · ARCHITECTS · SCIENTISTS · PLANNERS · SURVEYORS

DRAWN RCP DATE APRIL 2006 DESIGNED CKH DATE NOV 2006
CHECKED CLS DATE NOV 2006 SCALE AS SHOWN

CONTRACT NO. SHEET 140 OF 271

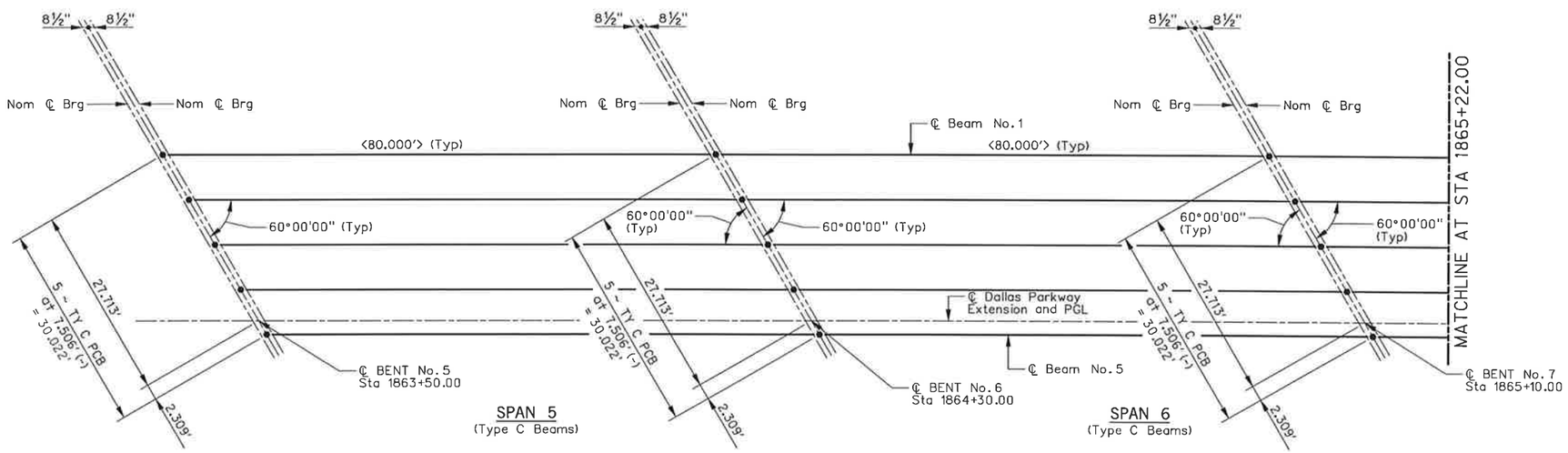

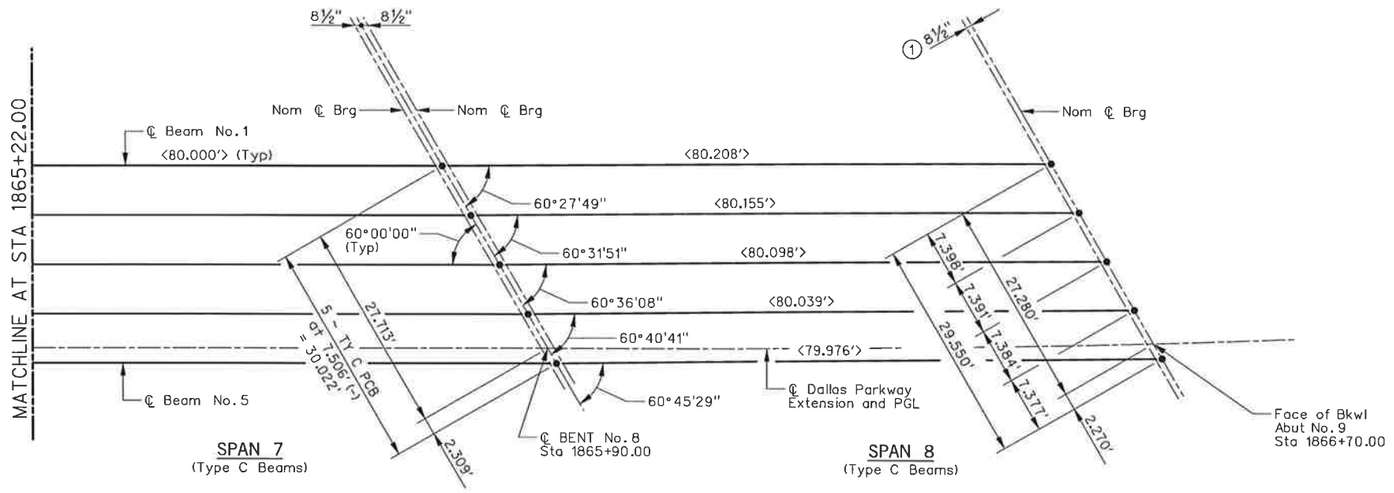

PLAN

SCALE: 1" = 20'-0"

Dimensions shown thus <xxx.xxx'> represent horizontal beam length from Face of Abut Bkwl to centerline of Bent or from centerline to centerline of Bents.

TABLE OF BEAM LENGTHS AND DEAD LOAD DEFLECTIONS				
SPAN NO.	BEAM NO.	"A" FT	"B" FT	LENGTH FT
5	ALL	0.080	0.113	79.667'
6	ALL	0.080	0.113	79.667'
7	ALL	0.080	0.113	79.667'
8	1	0.080	0.113	79.850'
	2	0.080	0.113	79.797'
	3	0.080	0.113	79.741'
	4	0.080	0.113	79.681'
	5	0.080	0.113	79.619'

All beam lengths are horizontal length end to end of beam.

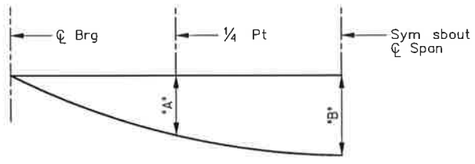

NOTE: Deflections shown are due to concrete slab only. (E_c = 5 x 10^6 psi) Calculated deflections shown are theoretical and actual dimensions may be less. Deflections shall be adjusted based on field observations.

NOTES:

(1) See Standard IBEB for orientation of dimension.

"CONSTRUCTION RECORD DRAWINGS_8-01-2009

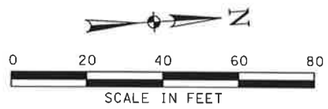

HL-93 LOADING

NO.	DATE	REVISION	APPROV.

DALLAS PARKWAY EXTENSION

COLLIN COUNTY

DOE BRANCH BRIDGE
FRAMING PLAN UNIT 2

Halff Associates, Inc.
ENGINEERS · ARCHITECTS · SCIENTISTS · PLANNERS · SURVEYORS

DRAWN	RCP	DESIGNED	CKH
DATE	APRIL 2006	DATE	NOV 2006
CHECKED	CLS	SCALE	AS SHOWN
DATE	NOV 2006		

CONTRACT NO. _____ SHEET 11 OF 271

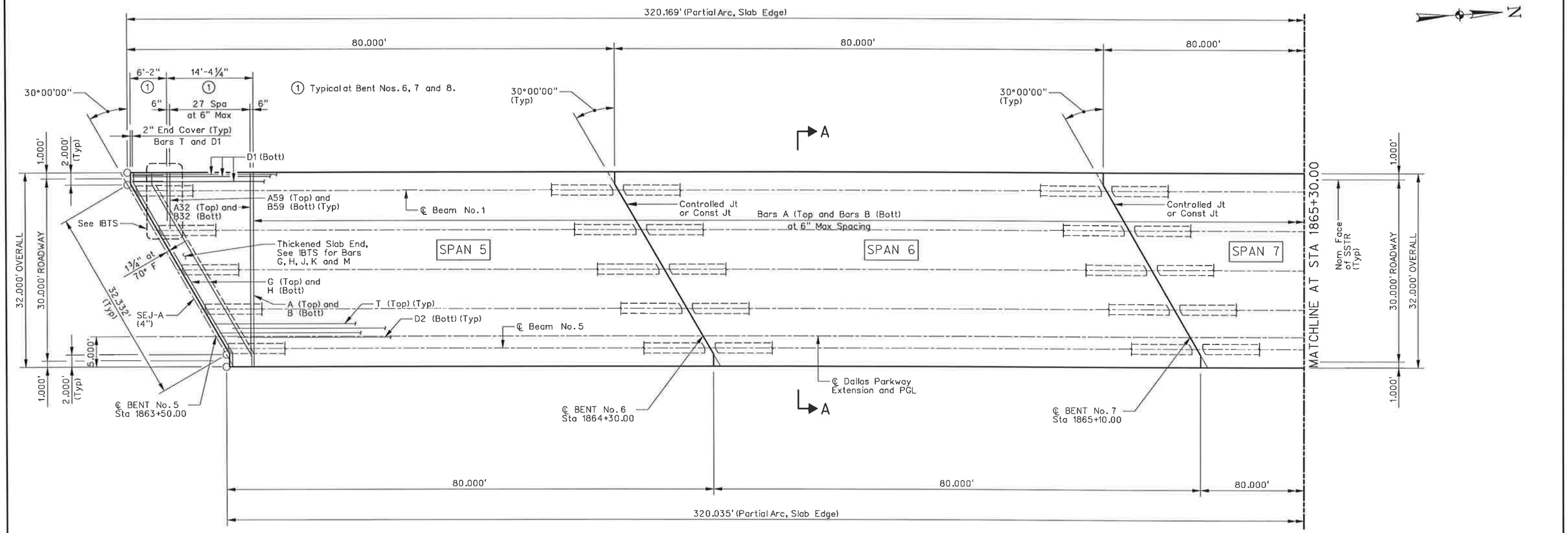

PLAN

SCALE: 1/16" = 1'-0"

General Notes:

All concrete shall be Class S, f'c = 4,000 psi
For beam, bearing pad, misc. slab and thickened slab end details not shown, see IBD, IBEB, IBMS and IBND.
For Sealed Expansion Joint details not shown, see SEJ-A.
For Sealed Expansion Joint Quanitites not shown, see Estimated Quantities sheet.
The minimum rate of concrete placing and finishing shall be not less than 30 feet of Bridge Deck per hour.
For rail details not shown see SSTR Rail.
For beam layouts, see Framing Plan sheets.
All reinforcing shall be Grade 60.
All reinforcing bars shall be epoxy coated.
Bar laps, where required, shall be as follows:
#4 = 2'-1"
#5 = 2'-7"
See PCP or PMDF (C) Standards for details and quantity adjustments if either of these options are used.

STATE OF TEXAS
CHONG KUK HONG
80621
LICENSED PROFESSIONAL ENGINEER
12-20-06

HL-93 LOADING

NO.	DATE	REVISION	APPROV.

DALLAS PARKWAY EXTENSION

COLLIN COUNTY

DOE BRANCH BRIDGE
DECK PLAN UNIT 2

1 OF 2

Halff Associates, Inc.
ENGINEERS · ARCHITECTS · SCIENTISTS · PLANNERS · SURVEYORS

DRAWN RCP	DATE APRIL 2006	DESIGNED CKH	DATE NOV 2006
CHECKED CLS	DATE NOV 2006	SCALE AS SHOWN	

CONTRACT NO. _____ SHEET 142 OF 271

"CONSTRUCTION RECORD DRAWINGS_8-01-2009

i:\23000s\23819\cadd\sheets\23819ssdp04.dgn

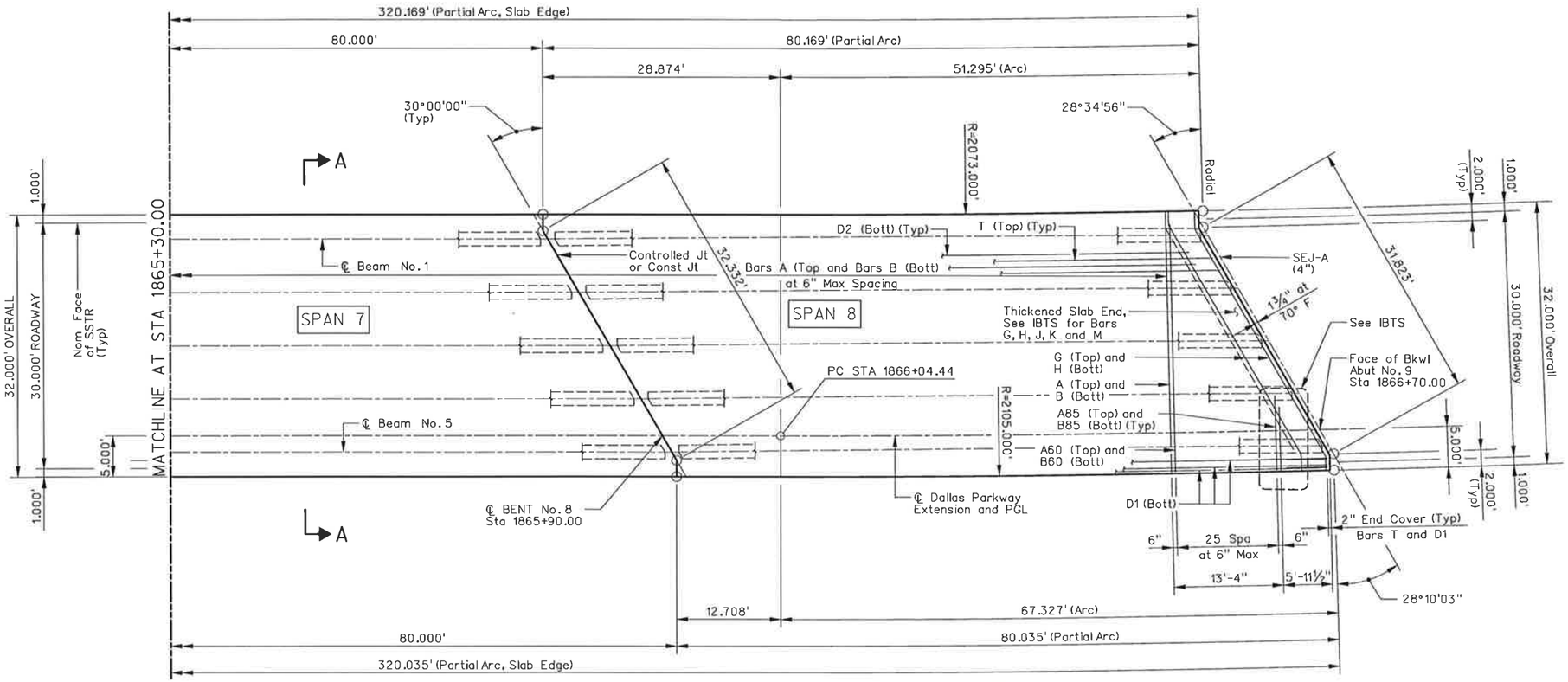

PLAN

SCALE: 1/16" = 1'-0"

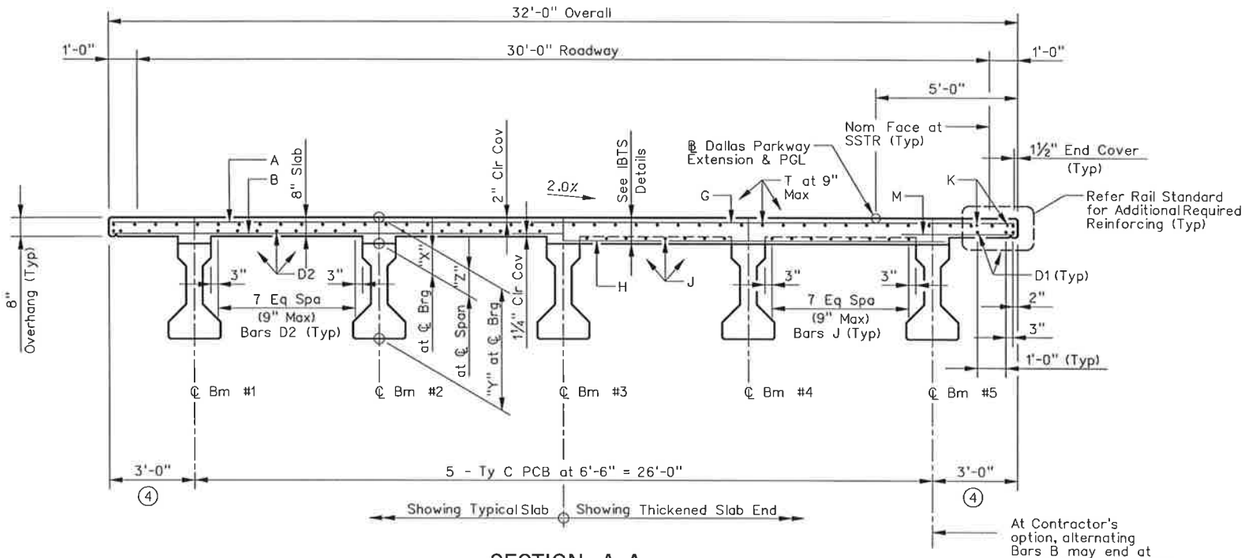

SECTION A-A

Scale: 3/16" = 1'-0"

④ Varies at Span 8

BAR TABLE

Bar	Size
A	#5
AA	#5
B	#5
D	#5
G	#5
H	#5
J	#5
K	#5
M	#5
T	#4

TABLE OF SECTION DEPTHS

SPAN NO.	BEAM NO.	"X" AT ℄ BRG	"Y" AT ℄ BRG	③ "Z" AT ℄ SPAN
5,6,7 and 8	ALL	11"	4'-3"	9⅝"

③ THEORETICAL DIMENSION

TABLE OF ESTIMATED QUANTITIES

SPAN	REINF CONCRETE SLAB	① PRESTR CONCRETE BEAMS (TY IV)	CLASS "S" CONCRETE	② REINF STEEL
NO.	SF	LF	CY	LB
5	2,560	398.33	64.6	16,640
6	2,560	398.34	63.8	16,640
7	2,560	398.36	63.8	16,640
8	2,563	398.75	64.7	16,660
TOTAL	10,243	1,593.78	256.9	66,580

① Lengths shown are bottom flange lengths with adjustments made for beam slope. See Framing Plan sheets for individual beam lengths.

② Reinforcing steel weight is calculated using an approximate factor of 6.5 Lbs/SF.

"CONSTRUCTION RECORD DRAWINGS_8-01-2009

STATE OF TEXAS
CHONG KUK HONG
80621
LICENSED PROFESSIONAL ENGINEER
12-20-06

HL-93 LOADING

NO.	DATE	REVISION	APPROV.

DALLAS PARKWAY EXTENSION

COLLIN COUNTY

DOE BRANCH BRIDGE
DECK PLAN UNIT 2

2 OF 2

Halff Associates, Inc.
ENGINEERS · ARCHITECTS · SCIENTISTS · PLANNERS · SURVEYORS

DRAWN RCP DATE APRIL 2006 DESIGNED CKH DATE NOV 2006
CHECKED CLS DATE NOV 2006 SCALE AS SHOWN

CONTRACT NO. SHEET 143 OF 271

i:\23000s\23819\cadd\sheets\23819ssdp04.dgn 12/20/2006 9:21:12 AM

9:21:12 AM P-200612-01

DISCLAIMER:
The use of this standard is governed by the "Texas Engineering Practice Act". No warranty of any kind is made by TxDOT for any purpose whatsoever. TxDOT assumes no responsibility for the conversion of this standard to other formats or for incorrect results or damages resulting from its use.

LEVELS DISPLAYED | ACC:

DESIGNED BEAMS (DEPRESSED STRANDS)

STRUCTURE	SPAN NO.	BEAM NO.	BEAM TYPE	NON-STD STRAND PATTERN	PRESTRESSING STRANDS: TOTAL NO.	TOTAL SIZE (in)	TOTAL STRGTH fpu (ksi)	TOTAL 'e' ℄ (in)	TOTAL 'e' END (in)	DEPRESSED NO.	DEPRESSED TO (in)	CONCRETE: RELEASE STRGTH f'ci (ksi)	CONCRETE: MINIMUM 28 DAY COMP STRGTH f'c (ksi)
DALLAS PARKWAY EXTENSION DOE BRANCH BRIDGE	ALL	ALL	C		32	1/2	270	12.84	7.34	8	30	5334	5334

OPTIONAL DESIGN

DESIGN LOAD COMP STRESS (TOP CL (SERVICE I) fcf(ksi)	DESIGN LOAD TENSILE STRESS (BOTT CL (SERVICE III) fcb(ksi)	REQUIRED MINIMUM ULTIMATE MOMENT CAPACITY (STRENGTH I) (ft-kips)	LIVE LOAD DISTRIB FACTOR ①
3546	-3839	3452	.554

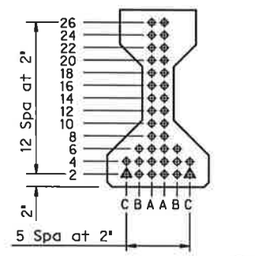

TYPE A BM ②

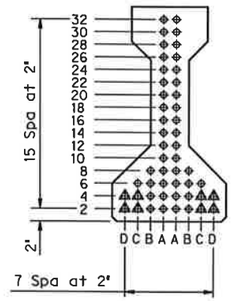

TYPE B BM ②

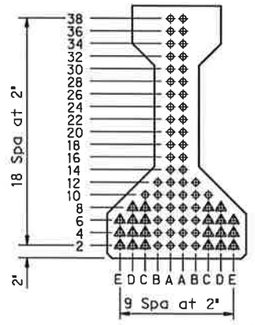

TYPE C BM ②

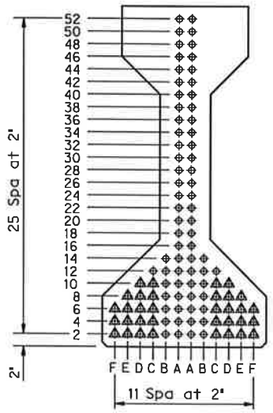

TYPE IV BM ②
(AASHTO TYPE IV BM)

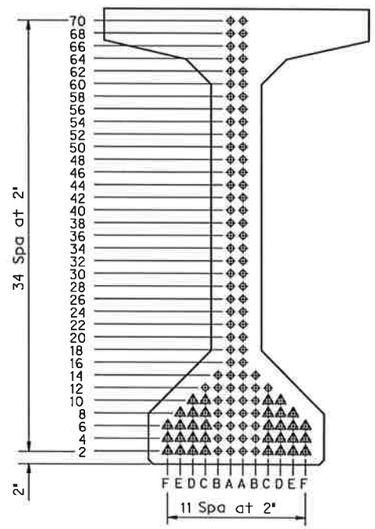

TYPE VI BM ②
(AASHTO TYPE VI BM)

NON-STANDARD STRAND PATTERNS

PATTERN	STRAND ARRANGEMENT AT ℄ OF BEAM

GENERAL NOTES:

Designed in accordance with AASHTO LRFD Specifications. All concrete shall be Class H. All reinforcing bars shall be Grade 60.

When shown on this sheet, the Fabricator has the option of furnishing either the designed depressed strand beam or an approved optional design. All optional design submittals shall be signed, sealed and dated by a registered Professional Engineer.

Optional designs for beams 120 feet or longer shall have a calculated residual camber equal to or greater than that of the designed beam.

Prestress losses for the designed beams have been calculated for a relative humidity of 70 percent. Optional designs shall likewise conform.

Certain beams with depressed strands are subject to cracking in the end of the beam. When such cracks occur, all subsequent beams of the same type and strand pattern shall have strands debonded in the following manner:

1. Alternate rows of depressed strands shall be debonded for two feet from each end of the beam.
2. One half of the straight strands, as nearly as possible, shall be debonded for four feet from each end of the beam.
3. The debonding pattern shall be symmetrical about the vertical axis of the beam for both depressed and straight strands.
4. Strands shall be debonded so that the centers of gravity of the depressed strands and the straight strands will remain within one inch of their original location.
5. Strands shall be encased in plastic tubing along entire debonded length, and ends of tubing shall be sealed with waterproof tape. Split plastic tubing may be used provided the seam of the tubing is sufficiently sealed with waterproof tape to prohibit grout infiltration. Wrapping of strands with tape to provide debonding will not be permitted.
6. Revised shop drawings will not be required.

For depressed strand designed beams, strands shall be located as low as possible on the 2" grid system unless a Non-Standard Strand Pattern is indicated. Fill row "2", then row "4", then row "6", etc., beginning each row in the "A" position and working outward until the required number of strands is reached. All strands in the "A" position shall be depressed, maintaining the 2" spacing so that, at the beam ends, the upper two strands are in the position shown in the table.

Strands for the designed beam shall be low relaxation strands pretensioned to 75 percent of fpu each.

① Portion of full HL93

② Full-length debonded strands are only permitted in strand positions marked △ Double wrap full-length debonded strands in outermost position of each row. Full-length debonding must comply with Item 426.4.F.4.

"CONSTRUCTION RECORD DRAWINGS_8-01-2009

STATE OF TEXAS
CHONG KUK HONG
80621
LICENSED PROFESSIONAL ENGINEER
12-20-06

HL93 LOADING

Texas Department of Transportation
Bridge Division

PRESTRESSED CONCRETE I-BEAM DESIGNS (NON-STANDARD SPANS)

IBND

FILE: ibndstel.dgn	DN: TxDOT	CK: TxDOT	DW: TxDOT	CK: TxDOT
©TxDOT January 2005	DISTRICT	FEDERAL AID PROJECT		SHEET
REVISIONS 01-06: Full-length debonding				194
	COUNTY	CONTROL	SECT	JOB	HIGHWAY
				P-200612-01	

DISCLAIMER:
The use of this standard is governed by the "Texas Engineering Practice Act". No warranty of any kind is made by TxDOT for any purpose whatsoever. TxDOT assumes no responsibility for the conversion of this standard to other formats or for incorrect results or damages resulting from its use.

ACC:
LEVELS DISPLAYED

TABLE OF BARS R SPACING (7)			
BEAM TYPE	ZONE 1	ZONE 2	ZONE 3
A	16 Spa at 4" = 5'-4"	25 Spa at 6" = 12'-6"	12" Max Spa to Midspan
B	20 Spa at 4" = 6'-8"	24 Spa at 6" = 12'-0"	12" Max Spa to Midspan
C	18 Spa at 4" = 6'-0"	28 Spa at 8" = 18'-8"	15" Max Spa to Midspan
IV	23 Spa at 4" = 7'-8"	24 Spa at 8" = 16'-0"	15" Max Spa to Midspan
VI	21 Spa at 4" = 7'-0"	14 Spa at 8" = 9'-4"	12" Max Spa to Midspan

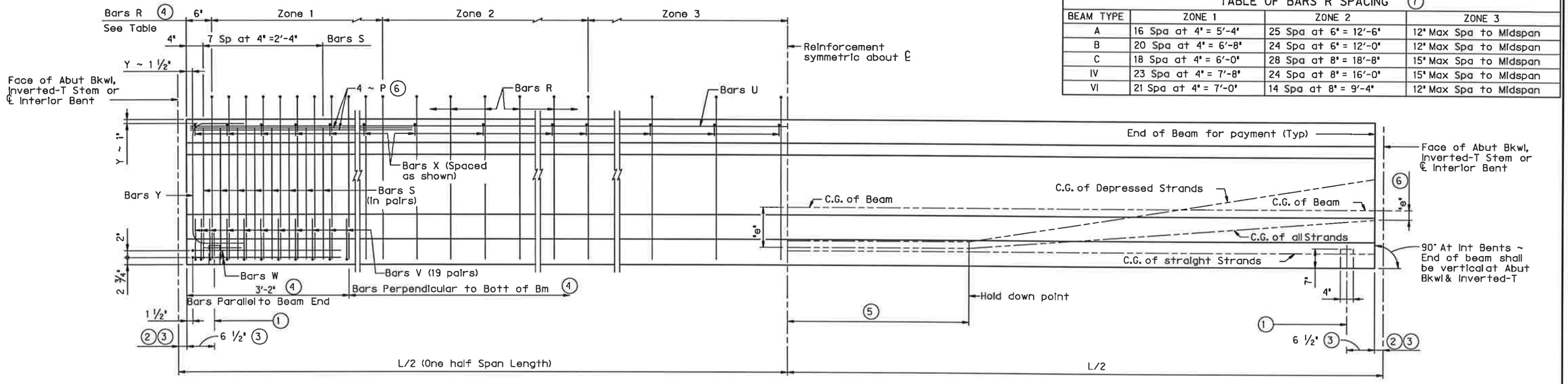

BEAM ELEVATION

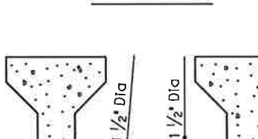

PLAN

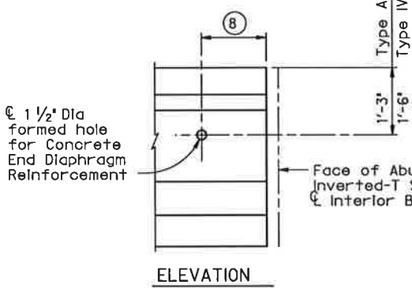

ELEVATION

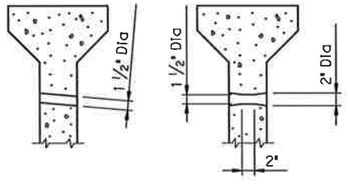

Form holes parallel to roadway slope if superelevation is greater than 0.03"/Ft for 1 1/2" Dia holes or 0.06"/Ft for 2" Dia holes.

FORMED HOLE SECTIONS

CONCRETE END DIAPHRAGM OPTION HOLE

(Diaphragm holes for lifting purposes will not be permitted.)
Only required when span details require End Diaphragms.

"CONSTRUCTION RECORD DRAWINGS_8-01-2009

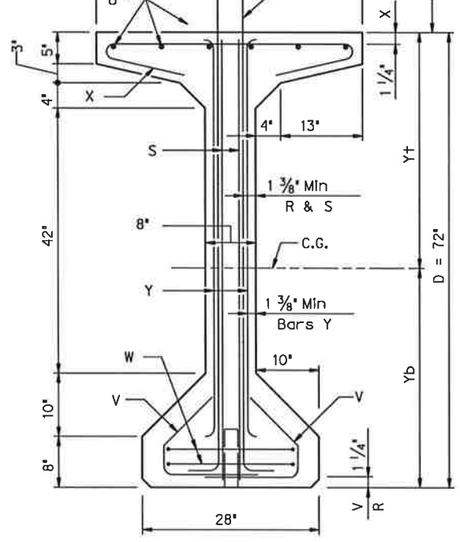

TYPE VI BEAM

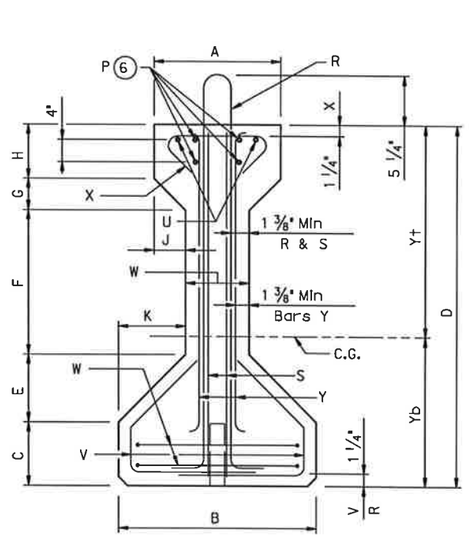

TYPES A, B, C & IV BEAMS

TABLE OF BEAM DIMENSIONS AND SECTION PROPERTIES																
BEAM TYPE	A In.	B In.	C In.	D In.	E In.	F In.	G In.	H In.	J In.	K In.	W In.	Y† In.	Yb In.	AREA In.²	I In.⁴	Weight plf
A	12	16	5	28	5	11	3	4	3	5	6	15.39	12.61	275.4	22,658	287
B	12	18	6	34	5 3/4	14	2 3/4	5 1/2	2 3/4	5 3/4	6 1/2	19.07	14.93	360.3	43,177	375
C	14	22	7	40	7 1/2	16	3 1/2	6	3 1/2	7 1/2	7	22.91	17.09	494.9	82,602	516
IV	20	26	8	54	9	23	6	8	6	9	8	29.25	24.75	788.4	260,403	821
VI	See section for beam dimensions											35.60	36.40	1,084.4	732,586	1,130

(1) ℄ 4" x 1 1/2" Vertical Slotted Hole at Doweled Beam end (labeled (D) on Bridge Layout). Required for Outside Beams only or as shown on substructure details. Anchorage holes may be tapered (4 3/4" x 1 5/8") at base. If holes are formed with sheet metal, forms may be left in place.

(2) 3" ~ Inverted-T Stem, 2" ~ Abutment Bkwl and Interior Bents.

(3) Measured along ℄ Beam at Interior Bents; perpendicular to Abutment Bkwl or Inverted-T Stem.

(4) Spacing shown shall not be exceeded at either top or bottom of beam.

(5) 5'-0" Min or L/20 (- 0 ; + 2'-0") Max.

(6) Bars P (#6 x 10'-0") are only required for Type IV Beams when "e" at beam ends exceeds 14.0". At the fabricator's option, bars larger than #6 may be used. When L is less than 50 ft, Bars P are to be the same length as Bars U.

(7) Short beams may not include all of Zone 2 and none of Zone 3 reinforcing.

(8) [(1'-2 1/2" - C₂s Skew Angle) - 2"] at Interior Bents.
[1'-0 1/2" - C₂s Skew Angle] at Abutment Bents and Inverted-T Bents.
Measured along beam centerline. Skew Angle = 90° - Beam Angle.

GENERAL NOTES:

Designed in accordance with AASHTO LRFD Specifications.
All concrete shall be Class H.
Bottom corners of all beam flanges and outside corners of exterior beam ends shall be chamfered 3/4" or rounded to a 3/4" radius.
All reinforcing bars for beams shall be Grade 60.
An equal area of deformed Welded Wire Reinforcement (WWR) (ASTM A497) may be substituted for Bars R, V, S or X.
It is permissible for bars or strands to come in contact with materials used in forming anchor holes.

HL93 LOADING

Sheet 1 of 2

Texas Department of Transportation
Bridge Division

PRESTRESSED CONCRETE I-BEAM DETAILS

IBD

FILE: tbdstdet.dgn	DN: TxDOT	CK: TxDOT	DW: TxDOT	CK: TxDOT
©TxDOT January 2005	DISTRICT	FEDERAL AID PROJECT		SHEET
REVISIONS				145
	COUNTY	CONTROL	SECT	JOB	HIGHWAY

P-200612-01

DISCLAIMER:
The use of this standard is governed by the "Texas Engineering Practice Act". No warranty of any kind is made by TxDOT for any purpose whatsoever. TxDOT assumes no responsibility for the conversion of this standard to other formats or for incorrect results or damages resulting from its use.

LEVELS DISPLAYED | ACC:

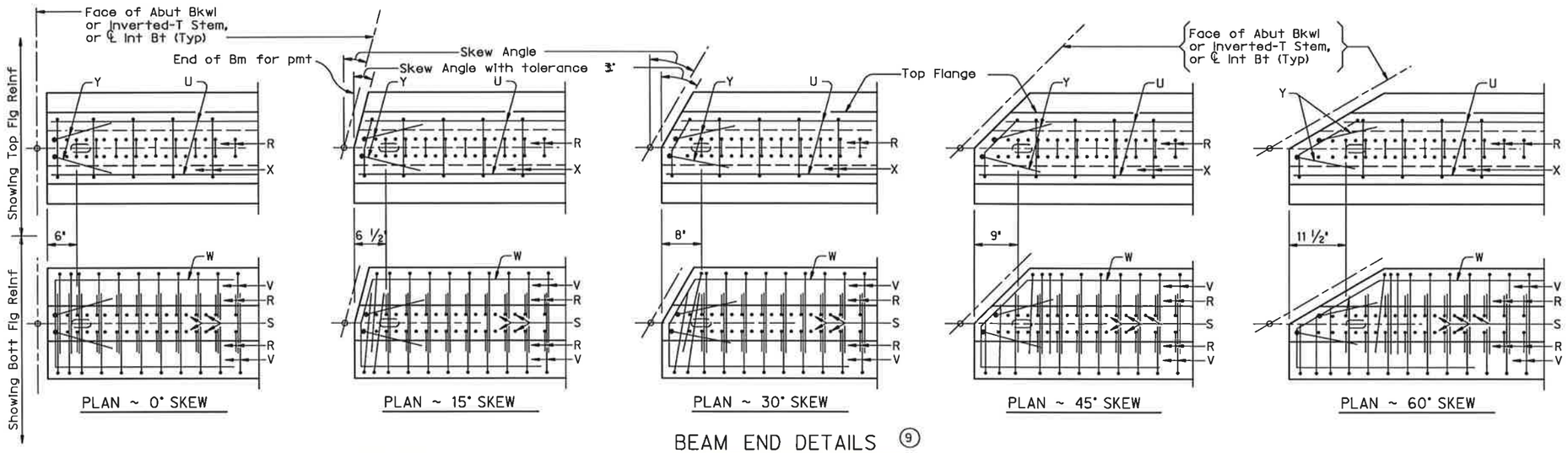

BEAM END DETAILS (9)

"CONSTRUCTION RECORD DRAWINGS_8-01-2009

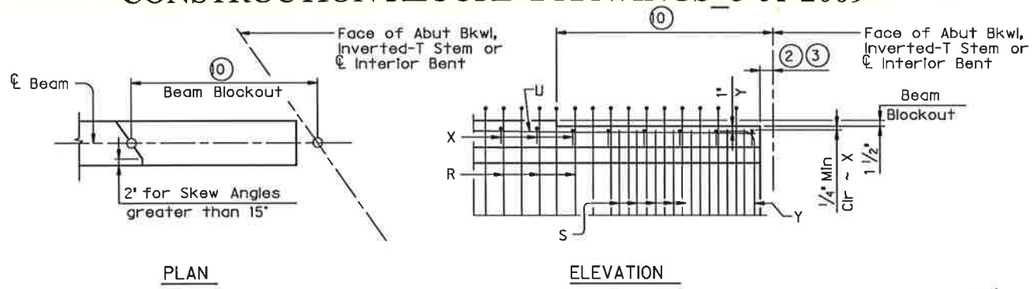

BEAM BLOCKOUT DETAIL FOR THICKENED SLAB END (11)

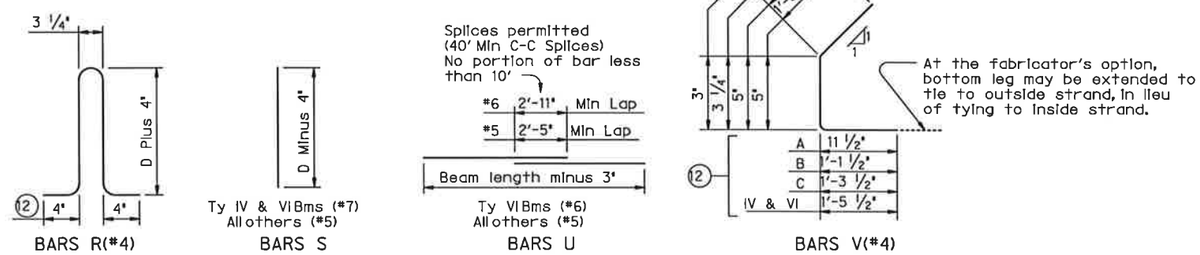

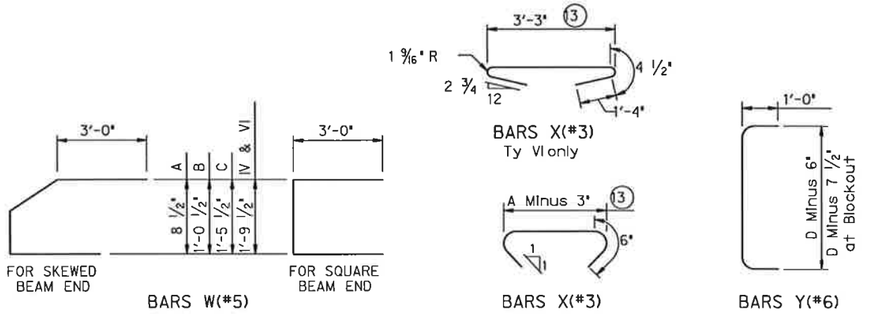

(2) 3" ~ Inverted-T Stem, 2" ~ Abutment Bkwl and Interior Bents.

(3) Measured along ℄ Beam at Interior Bents; perpendicular to Abutment Bkwl or Inverted-T Stem.

(9) Reinforcing patterns shown are to be used as guides in determining the reinforcement for the actual beam type (Type C shown) and the skew angle used. In general, the distance between consecutive Bars R and/or S shall be 2". This spacing may be varied in order to avoid Dowel Holes or Concrete End Diaphragm Option holes. However, a minimum cross sectional area equivalent to that of Bars R & S in a square beam end shall be provided.

(10) 4'-0" ~ Cos Skew Angle. Skew Angle = 90° ~ Beam Angle.

(11) Beam blockout required only when beam haunch at ℄ Brg is less than 2". Haunch = top of slab to top of beam dimension minus slab thickness.

(12) Bars may be cut or bent at skewed end as required.

(13) Increase for first bar at skewed end.

HL93 LOADING Sheet 2 of 2

Texas Department of Transportation
Bridge Division

PRESTRESSED CONCRETE I-BEAM DETAILS

IBD

FILE: ibdstdel.dgn	DN: TxDOT	CK: TxDOT	DW: TxDOT	CK: TxDOT
©TxDOT January 2005	DISTRICT	FEDERAL AID PROJECT		SHEET 146
REVISIONS				
	COUNTY	CONTROL	SECT	JOB	HIGHWAY
				P-200612-01

DISCLAIMER:
The use of this standard is governed by the "Texas Engineering Practice Act". No warranty of any kind is made by TxDOT for any purpose whatsoever. TxDOT assumes no responsibility for the conversion of this standard to other formats or for incorrect results or damages resulting from its use.

LEVELS DISPLAYED

ACC:

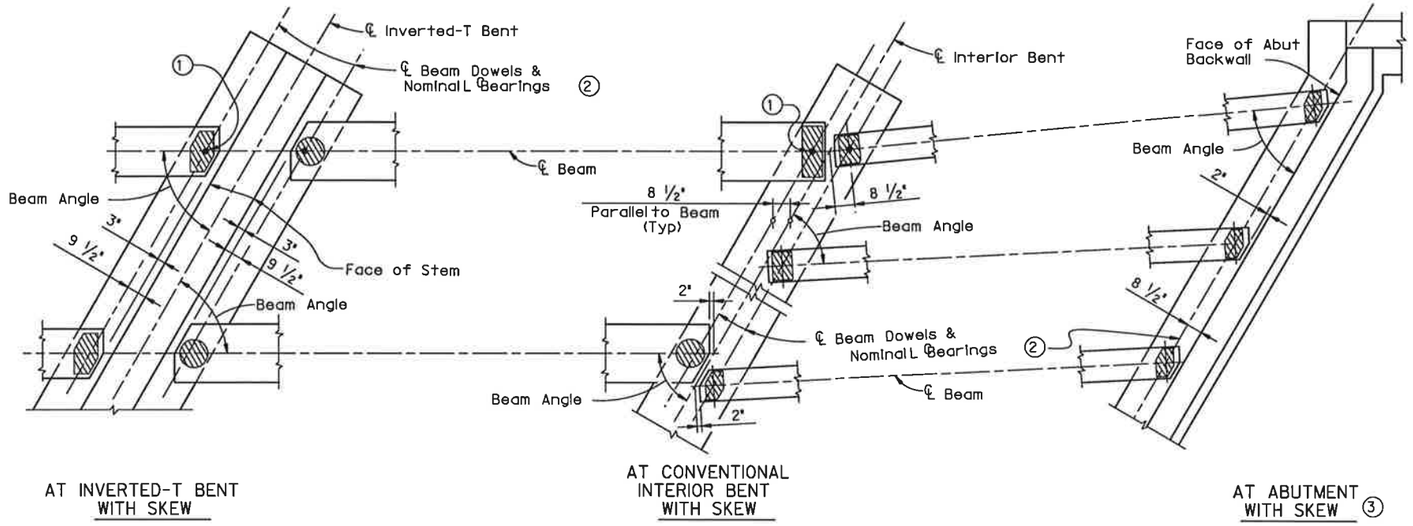

AT INVERTED-T BENT WITH SKEW

AT CONVENTIONAL INTERIOR BENT WITH SKEW

AT ABUTMENT WITH SKEW ③

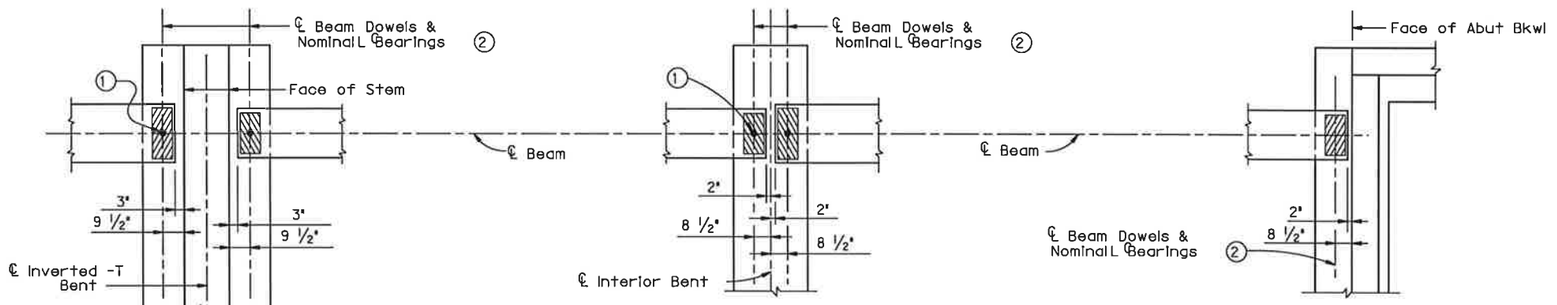

AT INVERTED-T BENT

AT CONVENTIONAL INTERIOR BENT

AT ABUTMENT

BEAM END DETAILS

1. Dowel at doweled beam end (labeled (D) on Bridge Layout). Required for outside beams only or as shown on substructure details.
2. For purposes of computing Bearing Seat Elevations, nominal centerline of bearing shall be defined as shown. The actual center of bearing pad may vary from this line.
3. For Transition Bents with backwall, beams and elastomeric bearings shall receive the same treatment as shown for Abutments.
4. When angle exceeds 0°, one or both beam ends shall be clipped to maintain the clearance between beam ends as shown in view.
5. See Elastomeric Bearing Data Table for Bearing size. Corner clips in Table not applicable for this situation. Table reflects beam conflicts of this type on radial bents only.

GENERAL NOTES:

These details accommodate skew angles up to 60°.
Shop drawings for approval are required.
A bearing layout which identifies location and orientation of all bearings shall be developed by the bearing fabricator. Permanently mark each bearing in accordance with the bearing layout. A copy of the bearing layout is to be provided to the Engineer.
Cost of furnishing and installing elastomeric bearings shall be included in unit price bid for "Prestressed Concrete Beams".

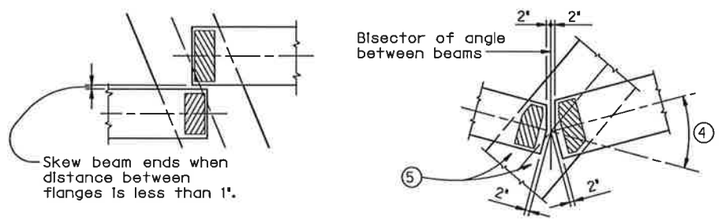

BEAM CONFLICT DETAILS

"CONSTRUCTION RECORD DRAWINGS_8-01-2009

HL93 LOADING Sheet 1 of 2

Texas Department of Transportation
Bridge Division

ELASTOMERIC BEARING AND BEAM END DETAILS

PRESTR CONCRETE I-BEAMS

IBEB

FILE: Ibebstel.dgn	DN: TxDOT	CK: TxDOT	DW: TxDOT	CK: TxDOT
©TxDOT January 2005	DISTRICT	FEDERAL AID PROJECT		SHEET
REVISIONS Rev. 4-05: Taper Tolerance and Shop Drawings				147
	COUNTY	CONTROL	SECT	JOB	HIGHWAY

P-200612-01

DISCLAIMER:
The use of this standard is governed by the "Texas Engineering Practice Act". No warranty of any kind is made by TxDOT for any purpose whatsoever. TxDOT assumes no responsibility for the conversion of this standard to other formats or for incorrect results or damages resulting from its use.

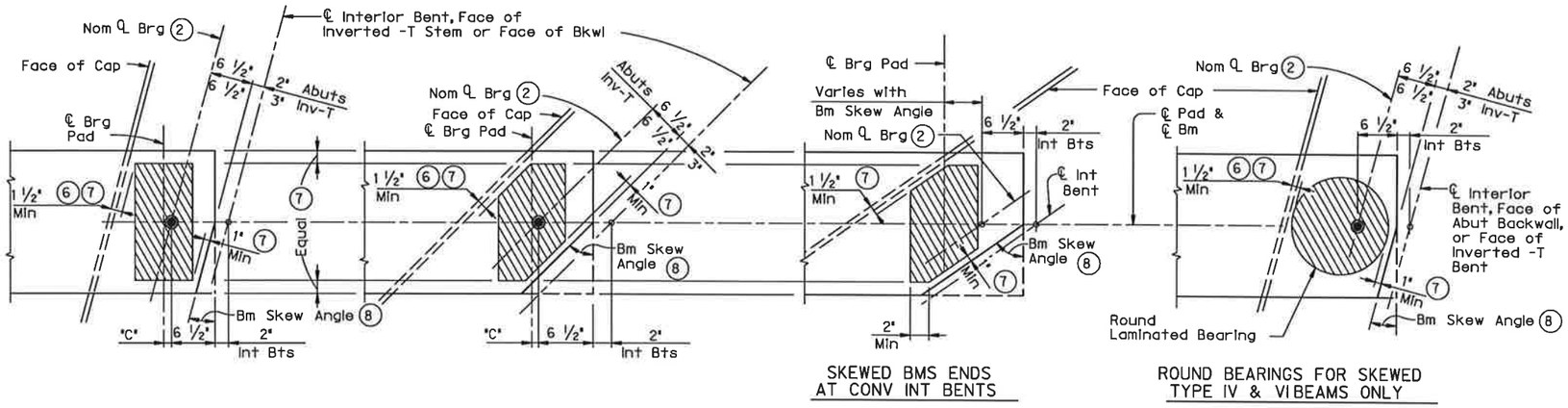

SKEWED BMS ENDS AT CONV INT BENTS

ROUND BEARINGS FOR SKEWED TYPE IV & VI BEAMS ONLY

ELASTOMERIC BEARING PLACEMENT DIAGRAMS

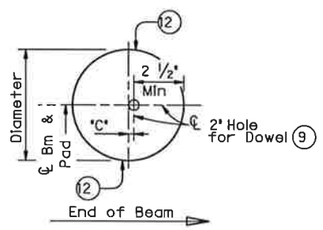

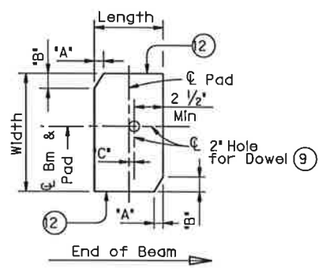

PLANS (10)

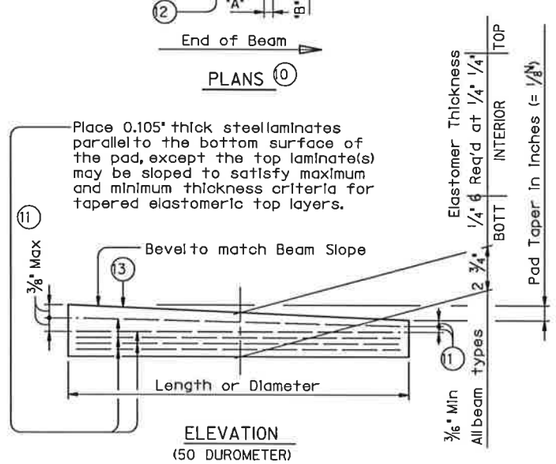

LAMINATED ELASTOMERIC BEARING DETAILS (14)

(2) For purposes of computing Bearing Seat Elevations, nominal centerline of bearing shall be defined as shown. The actual center of bearing pad may vary from this line.

(6) 3" for Inverted -T.

(7) Factors controlling laminated bearing placement if no dowel is present. Place L Pad as near Nominal L Brg as possible between limits shown.

(8) Complement of Beam Angle except at some conflicting beams.

(9) Provide 2" Dia Hole (always on beam end side of centerline pad) only at locations required. See substructure details for location. The Dowel offset "C" dimension may be 0" when the bridge is square.

(10) See Elastomeric Bearing Data Table for dimensions.

(11) Maximum and minimum layer thicknesses shown are for elastomer only, on tapered layers.

(12) Locate Permanent Mark here.

(13) BEARING TYPE shall be indicated on all pads. For tapered pads, BEARING TYPE shall be located on the high side. The Fabricator shall include the value of "N" (amount of taper in ⅛" increments) in this mark.
Examples: N=0, (for 0" taper)
N=1, (for ⅛" taper)
N=2, (for ¼" taper)
(etc.)
Fabricated pad top surface slope shall not vary from plan beam slope by more than $\left(\frac{0.0625"}{\text{Length or Dia}}\right)$ IN/IN.

(14) The use of Polyisoprene (natural rubber), for the manufacture of bearing pads, is not permitted.

(15) Substructure dimensions must satisfy the minimums provided to accommodate the elastomeric bearings shown on this standard.

(16) Interpolate "C" values for angles not shown between 30° & 40°, 40° & 50°, 50° & 60°.

TABLE OF MINIMUM SUBSTRUCTURE DIMENSIONS (15)

Beam Type	Abutments: Face of Bkwl to Face of Cap	Int Bents: Overall Cap Width	Inv-T Bents: Corbel Width
A,B,& C	1'-4 ½"	2'-9"	1'-8"
IV	1'-7 ½"	3'-3"	1'-10"
VI	1'-10 ½"	3'-9"	2'-0"

ELASTOMERIC BEARING DATA TABLE

Bent Type	Beam Type	Brg Type (13)	Beam End Skew Angle Range	Pad Size Lgth x Width	Pad Clip Dimensions "A"	Pad Clip Dimensions "B"	"C" (9)
AT ABUTMENTS, INVERTED - T & TRANSITION BENTS WITH BACKWALLS	A	A-1-"N"	0°thru 15°	7" x 12"	—	—	—
	A	A-2-"N"	15°+ thru 45°	7" x 12"	1 ¼"	1 ¼"	¾"
	A	A-3-"N"	45°+ thru 60°	7" x 12"	1 ½"	2"	1"
	B	B-1-"N"	0°thru 15°	7" x 14"	—	—	—
	B	B-2-"N"	15°+ thru 45°	7" x 14"	2 ¼"	2 ¼"	¾"
	B	B-3-"N"	45°+ thru 60°	7" x 14"	3 ¾"	2 ¼"	1"
	C	C-1-"N"	0°thru 15°	7" x 16"	—	—	—
	C	C-2-"N"	15°+ thru 45°	7" x 16"	3 ¼"	3 ¼"	¾"
	C	C-3-"N"	45°+ thru 60°	8" x 16"	6"	4"	1"
	IV	IV-1-"N"	0°thru 15°	7" x 22"	—	—	1"
	IV	IV-2-"N"	15°+ thru 29°	7" x 22"	2 ½"	4 ½"	1"
	IV	IV-3-"N"	30° (16)	15" Dia	—	—	2 ⅜"
	IV	IV-4-"N"	40° (16)	15" Dia	—	—	2 ⅝"
	IV	IV-5-"N"	50° (16)	15" Dia	—	—	3 ⅛"
	IV	IV-6-"N"	60° (16)	15" Dia	—	—	4"
	VI	VI-1-"N"	0°thru 15°	9" x 24"	—	—	2"
	VI	VI-2-"N"	15°+ thru 29°	9" x 24"	3 ¼"	5 ½"	2"
	VI	VI-3-"N"	30° (16)	17" Dia	—	—	3 ¾"
	VI	VI-4-"N"	40° (16)	17" Dia	—	—	4"
	VI	VI-5-"N"	50° (16)	17" Dia	—	—	5 ½"
	VI	VI-6-"N"	60° (16)	17" Dia	—	—	6"
AT CONVENTIONAL INTERIOR BENTS — Sq Bm Ends	A	A-4-"N"	Not Applicable	7" x 12"	—	—	—
	B	B-4-"N"	Not Applicable	7" x 14"	—	—	—
	C	C-4-"N"	Not Applicable	7" x 16"	—	—	—
	IV	IV-7-"N"	Not Applicable	7" x 22"	—	—	—
	VI	VI-7-"N"	Not Applicable	9" x 24"	—	—	—
AT CONVENTIONAL INTERIOR BENTS — Skewed Bm Ends	A	A-5-"N"	0°thru 15°	7" x 12"	—	—	—
	A	A-6-"N"	15°+ thru 60°	7" x 12"	1"	1"	—
	B	B-5-"N"	0°thru 15°	7" x 14"	—	—	—
	B	B-6-"N"	15°+ thru 45°	7" x 14"	1 ¾"	1 ¾"	—
	B	B-7-"N"	45°+ thru 60°	7" x 14"	2 ¾"	1 ¾"	—
	C	C-5-"N"	0°thru 15°	7" x 16"	—	—	½"
	C	C-6-"N"	15°+ thru 45°	7" x 16"	2 ¾"	2 ¾"	—
	C	C-7-"N"	45°+ thru 60°	7" x 16"	4 ½"	2 ¾"	—
	IV	IV-8-"N"	0°thru 15°	7" x 22"	—	—	1"
	IV	IV-9-"N"	15°+ thru 29°	7" x 22"	1 ¼"	2"	—
	IV	IV-10-"N"	29°+ thru 60°	15" Dia	—	—	—
	VI	VI-8-"N"	0°thru 15°	9" x 24"	1"	3 ¾"	1 ½"
	VI	VI-9-"N"	15°+ thru 29°	9" x 24"	1"	2"	—
	VI	VI-10-"N"	29°+ thru 60°	17" Dia	—	—	—

HL93 LOADING

Sheet 2 of 2

Texas Department of Transportation
Bridge Division

ELASTOMERIC BEARING AND BEAM END DETAILS

PRESTR CONCRETE I-BEAMS

IBEB

FILE: ibebstel.dgn	DN: TxDOT	CK: TxDOT	DW: TxDOT	CK: TxDOT
©TxDOT January 2005	DISTRICT	FEDERAL AID PROJECT		SHEET
REVISIONS Rev. 4-05: Taper Tolerance and Shop Drawings				1418
	COUNTY	CONTROL	SECT	JOB	HIGHWAY
					P-200612-01

LEVELS DISPLAYED | ACC:

"CONSTRUCTION RECORD DRAWINGS_8-01-2009

DISCLAIMER:
The use of this standard is governed by the "Texas Engineering Practice Act". No warranty of any kind is made by TxDOT for any purpose whatsoever. TxDOT assumes no responsibility for the conversion of this standard to other formats or for incorrect results or damages resulting from its use.

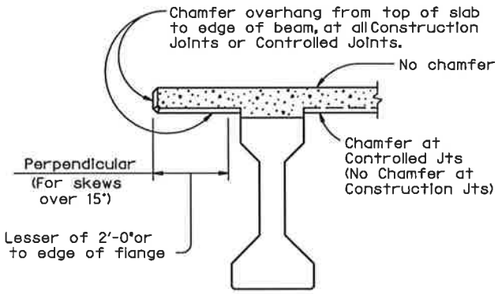

CHAMFER LIMITS DETAIL (1)

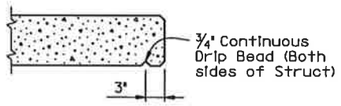

DRIP BEAD DETAIL

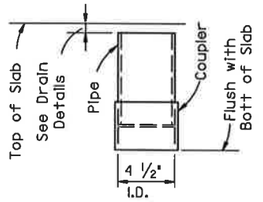

C-I-P DRAIN DETAIL (8)

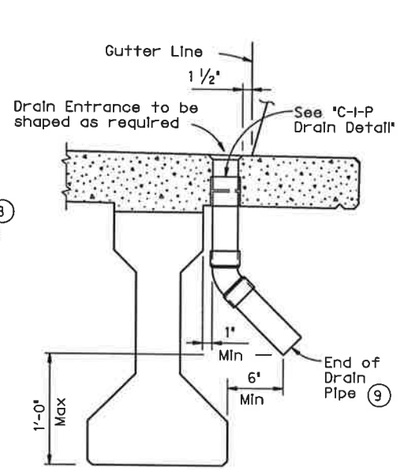

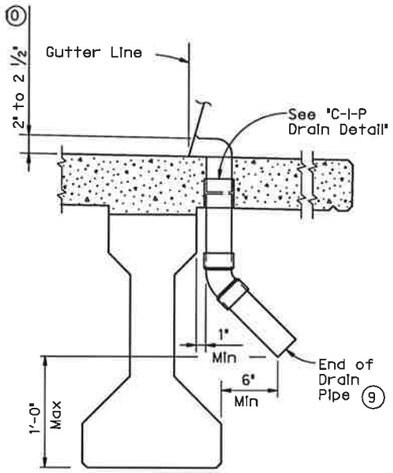

DRAIN DETAILS (11)

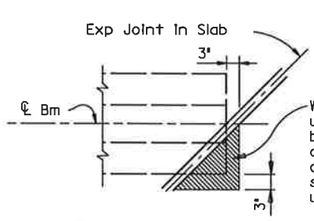

Where corners of Beam Flanges project under slab of adjacent span, care shall be taken to provide a minimum of ½" clearance between top of beam and bottom of adjacent slab. Polystyrene or other suitable compressible material may be used as a filler.

TREATMENT AT BEAM END FOR SKEWED SPANS

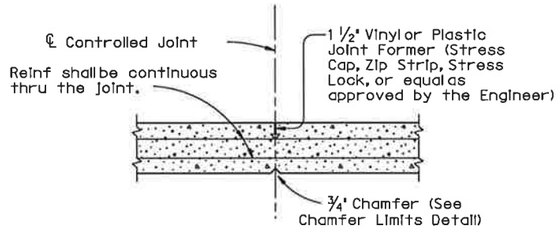

CONTROLLED JOINT DETAIL

(Saw-cutting will not be allowed)

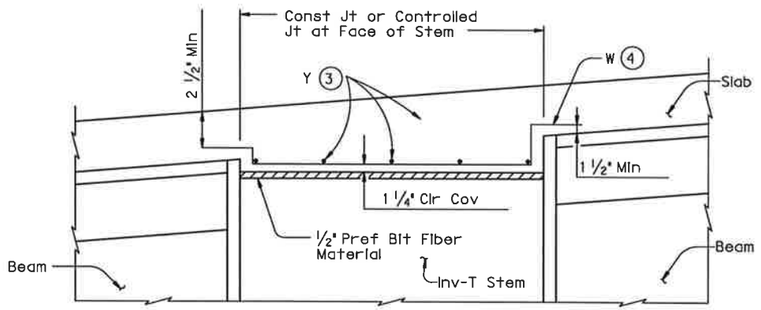

REINFORCEMENT OVER INV-T BENTS

Slab reinforcement not shown for clarity.

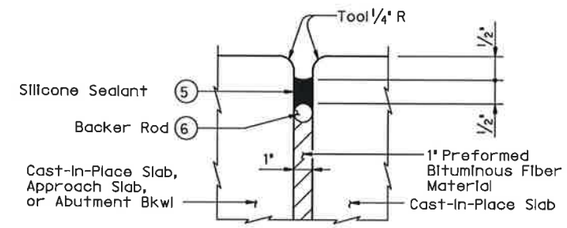

TYPE A JOINT DETAIL (7)

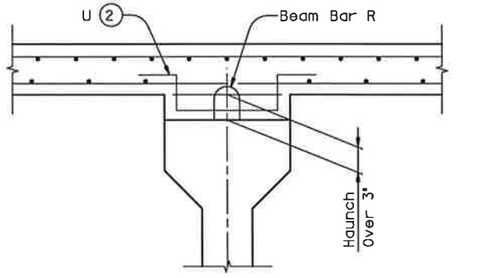

HAUNCH REINFORCING DETAIL

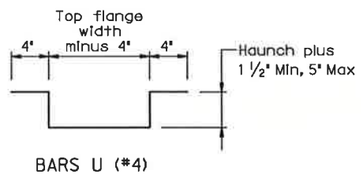

BARS U (#4)

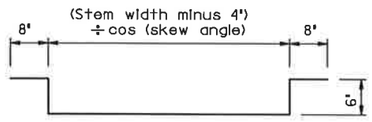

BARS W (#4)

"CONSTRUCTION RECORD DRAWINGS_8-01-2009

(1) See Span details for type of joint and joint locations.

(2) Space Bars U with Beam Bars R in all areas where measured haunch exceeds 3".

(3) Space Bars Y (#4) at 12" Max. Use 2" end cover. Number of Bars Y must satisfy spacing limit. Place parallel to bent.

(4) Space Bars W at 12" Max (3" from end of cap). Tilt if necessary to maintain cover requirements. Place parallel to longitudinal slab reinforcement.

(5) Class 7 silicone sealant that conforms to DMS-6310. Install when ambient temperature is between 55°F and 85°F and rising. Engineer to determine allowable hours for sealant application.

(6) 1 ¼" backer rod must be compatible with joint sealant. Use of multiple pieces to create a backer rod cross section is not permitted. Top of backer rod must be convex as shown.

(7) The maximum distance between Type A expansion joints is 100'. See Bridge Layout for location of joints. Type A joints will not be paid for directly, but shall be considered subsidiary to Item 420, "Concrete Structures".

(8) Roughen outside of PVC with coarse rasp or equal to ensure bond with cast-in-place concrete.

(9) No water shall be discharged onto girders.

(10) Drain Entrance formed in Rail or Sidewalk.

(11) All drain pipe and fittings to be 4" diameter (Sch 40) PVC. See Item 481 "PVC Pipe for Drains" for pipe, connections and solvent welding. Bend reinforcing steel to clear PVC 1". Drain length and location shall be as directed by the Engineer. No drains shall be permitted over roadways or railways, or within 10'-0" of Bent Caps. Degrease outside of exposed PVC, apply acrylic water base primer, then coat with same surface finishing material as used for outside girder face. Variations of the above designs, as required for the type of rail used and its location on the structure, shall be installed with the approval and direction of the Engineer.

GENERAL NOTES:
Designed in accordance with AASHTO LRFD Specifications.
All items (reinforcing steel, drains, joint formers, etc.) shown on this sheet shall be considered subsidiary to other bid items.

Texas Department of Transportation
Bridge Division

MISCELLANEOUS SLAB DETAILS
PRESTR CONCRETE I-BEAMS

IBMS

FILE: ibmsstel.dgn	DN: TxDOT	CK: TxDOT	DW: TxDOT	CK: TxDOT
©TxDOT January 2005	DISTRICT	FEDERAL AID PROJECT		SHEET
REVISIONS				149
	COUNTY	CONTROL	SECT	JOB	HIGHWAY

P-200612-01

ACC:
LEVELS DISPLAYED

DISCLAIMER:
The use of this standard is governed by the "Texas Engineering Practice Act". No warranty of any kind is made by TxDOT for any purpose whatsoever. TxDOT assumes no responsibility for the conversion of this standard to other formats or for incorrect results or damages resulting from its use.

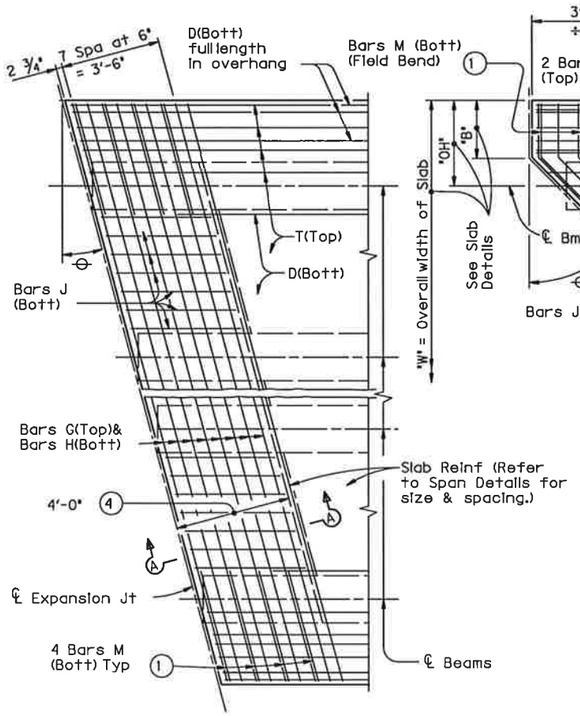

PARTIAL PLAN FOR SLABS WITHOUT BREAKBACK

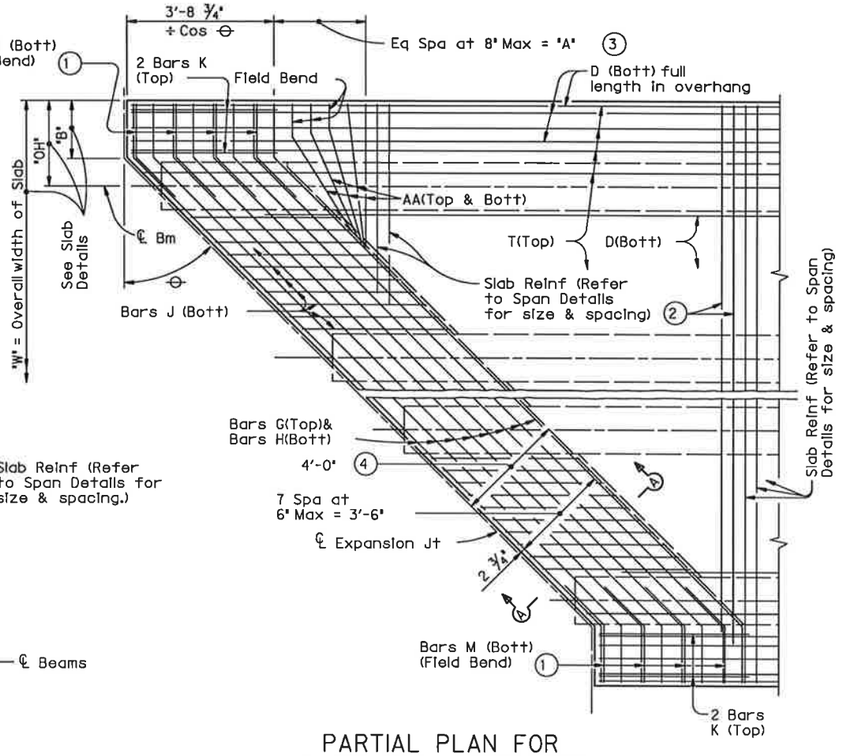

PARTIAL PLAN FOR SLABS WITH BREAKBACK

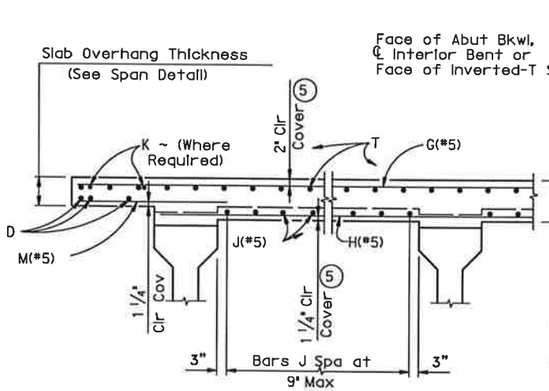

TYPICAL TRANSVERSE SECTION

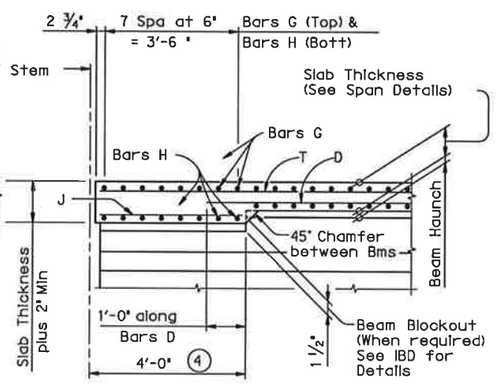

SECTION A-A

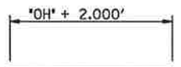

BARS AA (#5)

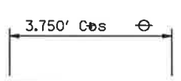

BARS J (#5)

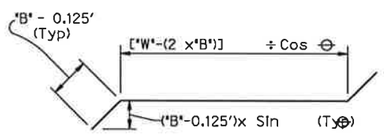

BARS G (#5)
(For Slabs With Breakbacks)

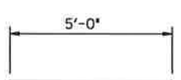

BARS K (#5)

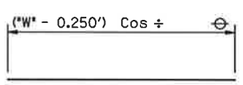

BARS G (#5)
(For Slabs Without Breakbacks)

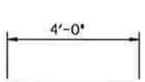

BARS M (#5)

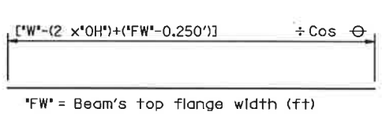

BARS H (#5)

(1) 1' Max Spacing measured along slab edge.

(2) End the top transverse reinforcement steel at inside Bar G. End the bottom transverse reinforcement steel 1'-0" beyond inside Bar G.

(3) "A"= ("OH" + 2.125' + $\frac{0.052'}{\sin \theta} \times \tan \theta$

(4) Thickened Slab End dimensioned perpendicular to Face of Bkwl, Centerline Interior Bent or Face of Inverted-T Stem.

(5) Clear Cover shall be as indicated unless otherwise shown on Span Details.

GENERAL NOTES:

Designed according to AASHTO LRFD Specifications.

These details are to be used in conjunction with the Span Details and Standard PCP (If prestressed concrete panels are used).

All reinforcing bars shall be Grade 60 steel.

Unless otherwise shown or noted hereon, all Span Details remain unchanged.

If slab reinforcing steel is shown on the Slab Details to be epoxy coated, then Bars AA, G, K, H, J and M shall be epoxy coated.

Bar laps, where required, shall be as follows:

Uncoated ~ #4 = 1'-5"
~ #5 = 1'-9"
Epoxy Coated ~ #4 = 2'-1"
~ #5 = 2'-7"

"CONSTRUCTION RECORD DRAWINGS_8-01-2009

HL93 LOADING

Texas Department of Transportation
Bridge Division

THICKENED SLAB END DETAILS

PRESTR CONC I-BEAM SPANS

IBTS

FILE: ibtsstel.dgn	DN: TxDOT	CK: TxDOT	DW: TxDOT	CK: TxDOT			
©TxDOT January 2005	DISTRICT	FEDERAL AID PROJECT					SHEET
REVISIONS							150
	COUNTY			CONTROL	SECT	JOB	HIGHWAY
							P-200612-01

LEVELS DISPLAYED ACC:

DISCLAIMER:
The use of this standard is governed by the "Texas Engineering Practice Act". No warranty of any kind is made by TxDOT for any purpose whatsoever. TxDOT assumes no responsibility for the conversion of this standard to other formats or for incorrect results or damages resulting from its use.

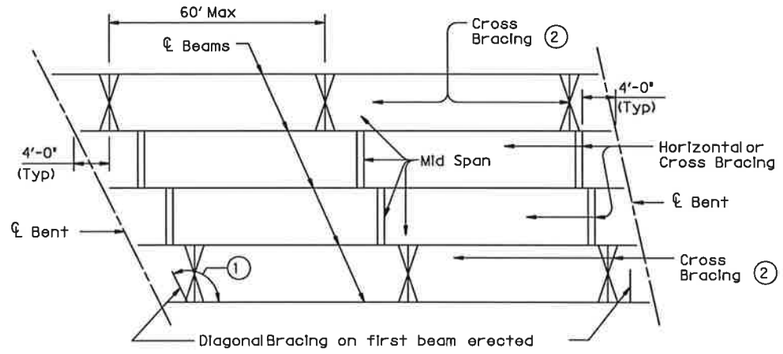

ERECTION BRACING

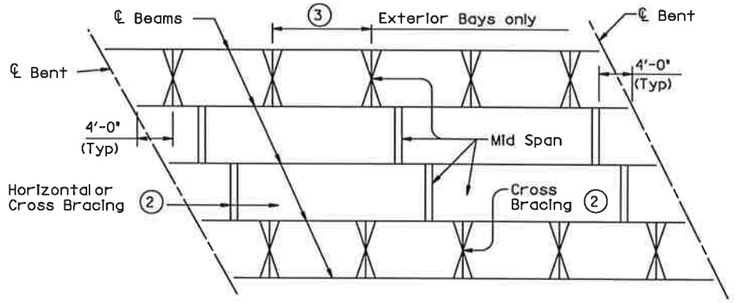

SLAB PLACEMENT BRACING

"CONSTRUCTION RECORD DRAWINGS 8-01-2009

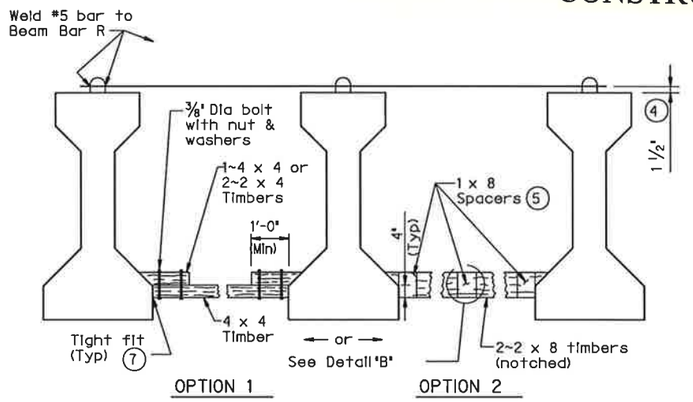

HORIZONTAL BRACING DETAILS (6)

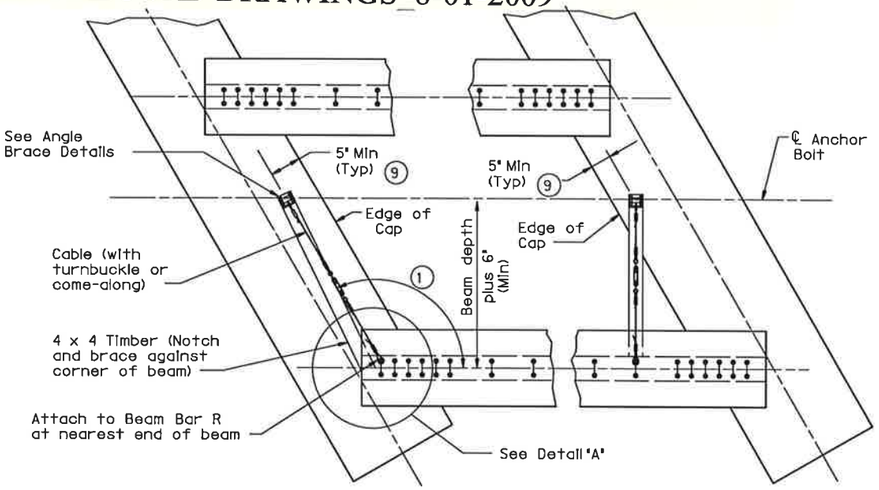

PLAN

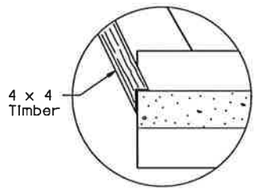

DETAIL "A"

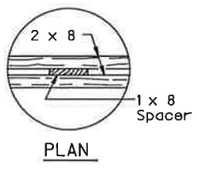

PLAN

DETAIL "B"

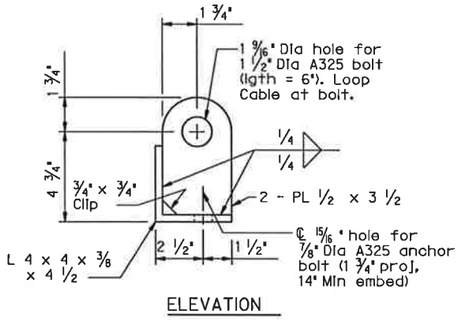

ELEVATION

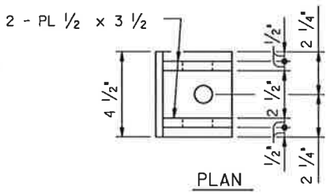

PLAN

ANGLE BRACE DETAILS

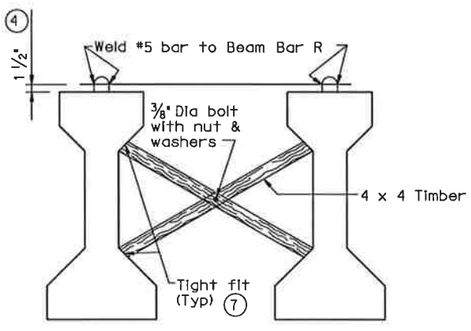

CROSS BRACING DETAILS (6)

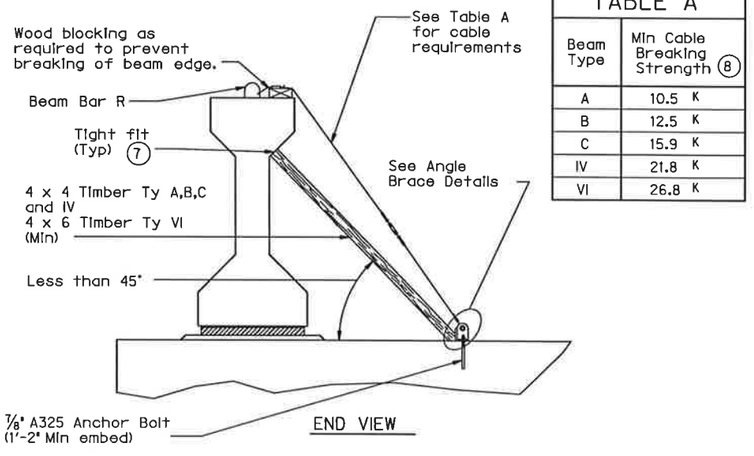

DIAGONAL BRACING DETAILS (6)

(To be used on both ends of the first beam erected in the span.)

TABLE A	
Beam Type	Min Cable Breaking Strength (8)
A	10.5 K
B	12.5 K
C	15.9 K
IV	21.8 K
VI	26.8 K

HAULING & ERECTION:
The Contractor's attention is directed to the possible lateral instability of Type VI prestressed concrete beams, especially during hauling and erection. The use of the following methods of improving the stability of these beams is encouraged: Location of lifting devices at the maximum practical distance from the beam ends; use of external lateral stiffening devices during hauling and erection; lifting with vertical lines using two machines and care in handling to minimize inertial and impact forces. External adjustable stiffening devices (hog rods) will be required for any Ty VI beam in excess of 120'.

ERECTION BRACING:
Erection bracing details are considered minimum for fulfilling the requirements of Specification Item 425 for bracing Types A, B, C, IV, and VI prestressed concrete beams regardless of location of structure.
Required erection bracing shall be placed immediately after erection of each beam and remain in place until additional bracing as required for slab placement is in place. This standard is needed in all cases to meet requirements for Slab Placement Bracing.

SLAB PLACEMENT BRACING:
The details for slab placement bracing are considered minimum for fulfilling the requirements of Specification Item 420.
Required slab placement bracing shall remain in place until slab concrete has attained a compressive strength of 3000 psi.

GENERAL NOTES:
Bracing details for closely spaced beams (as on ramps or railroad structures) are not included herein. Details for spans longer than 150' are not provided. The Contractor shall submit his proposed bracing details for such conditions to the Engineer for approval prior to erection.
Systems equal to or better than those shown may be used provided details of such systems are submitted to and approved by the Engineer prior to erection.
Use of these systems and/or details does not relieve the Contractor of the responsibility for the adequacy of the bracing and the safety of the structure.
Removal of bracing for short periods of time to align beams is permissible.
All turn-buckles, come-alongs, anchors and other connections shall be capable of developing the full strength of the cable shown hereon.

(1) If angle shown exceeds 120 degrees, move diagonal brace to other side of beam and place square to beam. This may prevent exterior beam from being erected first.

(2) Cross bracing must be placed between the first two beams erected, in exterior bays, and in every fourth bay. At the Contractor's option, remaining bays may have either cross-bracing or horizontal bracing.

(3) 15'-0" Max for Type A and B beams. 30'-0" Max for Type C, IV, and VI beams.

(4) Place and weld #5 bars as shown during erection. If forming deck with prestressed panels, bars can be temporarily removed, one at a time, during panel erection. Re-install bar prior to additional panel erection. Bars can rest on panels and be bent down and welded to Beam Bars R.

(5) Clear distance between spacers must not exceed 3'. Nail together with 16d nails.

(6) Pressure treated landscape timbers can not be used.

(7) Use wedges as necessary to obtain tight fit. Nail wedges to timbers.

(8) All hardware used with cable must be able to develop the minimum breaking strength specified. Use thimbles at all loops in cable. Install cable clamps with saddles bearing against the live end and U-bolts bearing against the dead end.

(9) It is acceptable to tie anchor bolts to cap reinforcement.

ACC:
LEVELS DISPLAYED

Texas Department of Transportation
Bridge Division

MINIMUM ERECTION AND BRACING REQUIREMENTS
PRESTRESSED CONCRETE I-BMS (TYPE A,B,C,IV & VI)

MEBR(C)

FILE: mebcstel.dgn	DN: TxDOT	CK: TxDOT	DW: TxDOT	CK: TxDOT
©TxDOT January 2005	DISTRICT	FEDERAL AID PROJECT		SHEET
REVISIONS				151
	COUNTY	CONTROL	SECT	JOB	HIGHWAY
				P-200612-01	

DISCLAIMER:
The use of this standard is governed by the "Texas Engineering Practice Act". No warranty of any kind is made by TxDOT for any purpose whatsoever. TxDOT assumes no responsibility for errors or omissions in these standards or other formats or for incorrect results or damages resulting from its use.

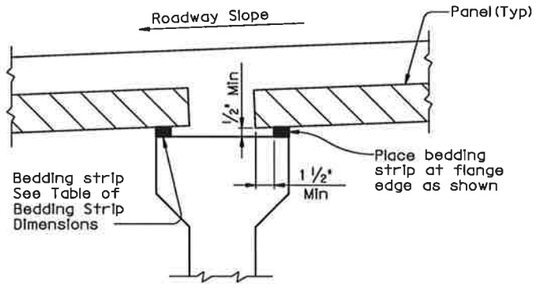

NORMAL GRADING DETAIL (1)

Showing Prestressed Concrete I-Beams.
(Other Beam Types Similar)

TABLE OF BEDDING STRIP DIMENSIONS		
WIDTH	HEIGHT (2)	
	Min	Max
1"(Min)	½"	2"
1 ¼"	½"	2 ½"
1 ½"	½"	3"
1 ¾"	½"	3 ½"
2"(Max)	½"	4"

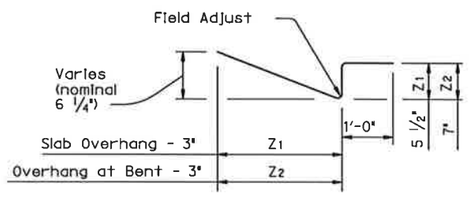

BARS Z (#4) (7)

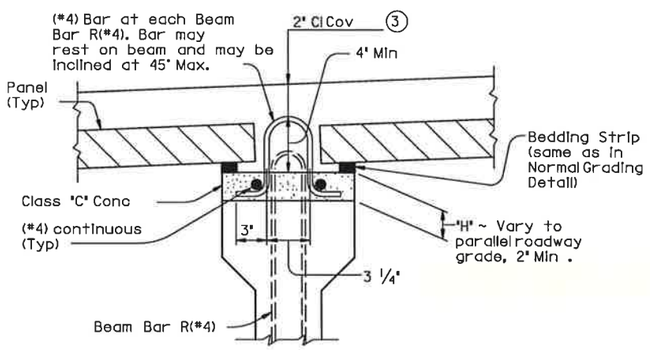

SPECIAL GRADING DETAILS FOR CONCRETE BEAMS (4)

Showing Prestressed Concrete I-Beams.
(U-Beams Similar)

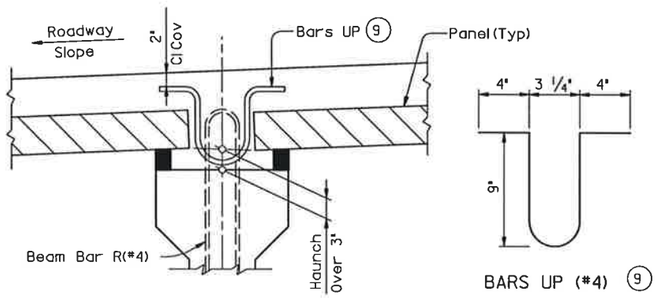

BARS UP (#4) (9)

HAUNCH REINFORCING DETAIL

Showing Prestressed Concrete I-Beams.
(U-Beams Similar)

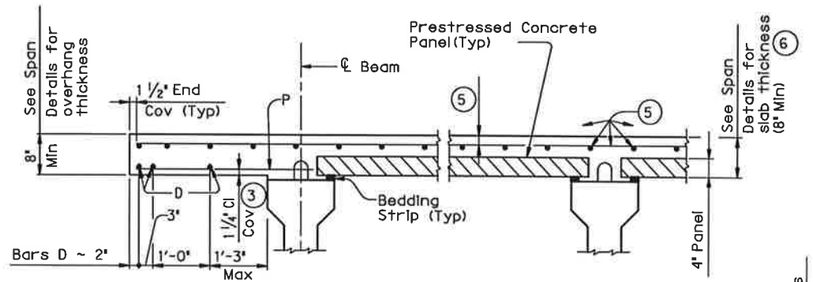

SHOWING PRESTRESSED CONCRETE I-BEAMS

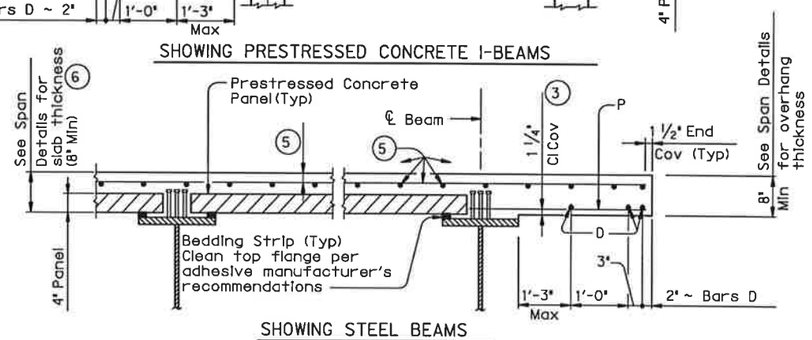

SHOWING STEEL BEAMS

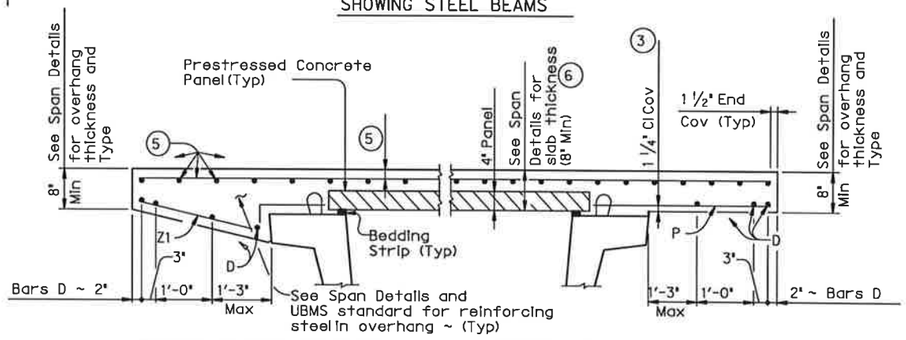

SHOWING SLOPED OVERHANG WITH PRESTR CONC U-BEAMS

SHOWING NORMAL OVERHANG WITH PRESTR CONC U-BEAMS

"CONSTRUCTION RECORD DRAWINGS" 8-01-2009

(1) To reduce the quantity of cast-in-place concrete, bedding strip thickness may be increased in ¼" increments. Bedding strips shall be comprised of one layer. Bond bedding strips to the beams with an adhesive compatible with bedding strips. Bedding strips over 2.5" high may need to be bonded to panels. The same thickness strip shall be used under any one panel edge and the maximum change in thickness between adjacent panels shall be ¼". Alternatively, bedding strips may be cut to grade. Panels may be supported by an alternate method, using a commercial product, if approved by the Engineer of Bridge Design, Bridge Division.

(2) Height must not exceed twice the width.

(3) Clear cover shall be as indicated unless otherwise shown on Span Details.

(4) For use where the distance between top of beam and finished grade can not be achieved within tolerances on cast-in-place slab thickness and thickness of bedding strips. Control dimensions shown in Normal Grading Detail still apply.

(5) See Span Details for top slab reinforcement and clear cover. Longitudinal top slab reinforcement may rest on top of prestressed concrete panels if necessary to maintain clear cover.

(6) The actual thickness constructed may exceed the slab thickness shown on the Span Details but, the extra thickness shall be no more than 2" for Prestressed Concrete I-Beams and 1" for Prestressed Concrete U-Beams and Steel Beams. Bearing Seat Elevations or finished grade may be adjusted.

(7) Bars Z1(#4) shall be field adjusted to match actual slope of slab overhangs. Width of slab overhang will vary along span with curved slab edges. Adjust Bar Z1(#4) dimensions to maintain proper cover. Bars Z2(#4) are located at Inv-T stems only.

(8) Max Spacing as listed unless otherwise shown.

(9) Space Bars UP(#4) with Beam Bars R(#4) in all areas where measured haunch exceeds 3".

TABLE OF REINFORCING STEEL (8)		
BAR	SIZE	Max Spa (In.)
A	#5	~
D	#5	9
E	#5	6
P	#4	18
UP	#4	~
Z	#4	18

CONSTRUCTION NOTES:

Erected panels must bear uniformly on bedding strips of extruded polystyrene placed along top flange edges.

If additional blocking is needed, special grading details for supporting the panels and extra reinforcing between beam and slab will be considered subsidiary to deck construction.

Care must be taken to ensure proper cleaning of construction debris and consolidation of concrete mortar under the edges of the panels. Bedding strips must be placed at beam flange edges so that adequate space is provided for the mortar to flow a minimum of 1 ½" under the panels as the slab concrete is placed.

To allow the proper amount of mortar to flow between beam and panel, the minimum vertical opening must be at least ½". Roadway cross-slope reduces the opening available for entry of the mortar. Bedding strips varying in thickness across the beam are therefore required.

All reinforcing steel in the cast-in-place slab must be Grade 60. See Table of Reinforcing Steel for size and spacing of reinforcement. Orientation of reinforcement (normal or skewed) must match that shown on the Span Details.

If the top and bottom layer of reinforcing steel is shown on the Span Details to be epoxy coated, then the A, D, E, P, & Z bars must be epoxy coated.

For clear span between U-beams less than or equal to 18', see Permissible Slab Forming Detail on Miscellaneous Slab Detail sheets, UBMS.

Bar Laps, where required, must be as follows:

Uncoated	~ #4	= 1'-5"
	~ #5	= 1'-9"
Epoxy Coated	~ #4	= 2'-1"
	~ #5	= 2'-7"

GENERAL NOTES:

Designed according to AASHTO LRFD Specifications.

Use of Prestressed Concrete Panels is not permitted for horizontally curved steel plate or tub girders. See Span Details for other possible restrictions on their use.

These details are to be used in conjunction with the Span Details and applicable Standard sheets.

Any additional reinforcement or concrete required on this standard is to be considered subsidiary to the bid item "Reinforced Concrete Slab".

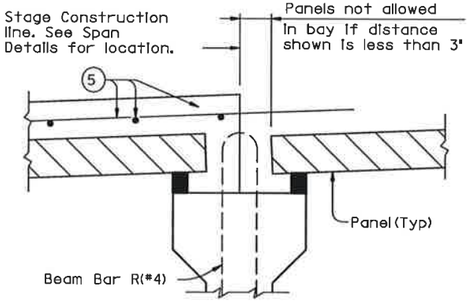

STAGE CONSTRUCTION LIMITATIONS ON PANELS

Showing Prestressed Concrete I-Beams.
(Other Beam Types Similar)

HL93 LOADING

SHEET 1 OF 4

Texas Department of Transportation
Bridge Division

PRESTRESSED CONCRETE PANELS

OPTIONAL DECK DETAILS FOR BEAM SPANS

PCP

FILE: pcpstdet.dgn	DN: TxDOT	CK: TxDOT	DW: TxDOT	CK: TxDOT
©TxDOT April 2006	DISTRICT	FEDERAL AID PROJECT		SHEET
REVISIONS				152
	COUNTY	CONTROL	SECT	JOB	HIGHWAY
				P-200612-01	

LEVELS DISPLAYED
ACC:

DISCLAIMER:
The use of this standard is governed by the "Texas Engineering Practice Act". No warranty of any kind is made by TxDOT for any purpose whatever. TxDOT assumes no responsibility for the conversion of this standard to other formats or for incorrect results or damages resulting from its use.

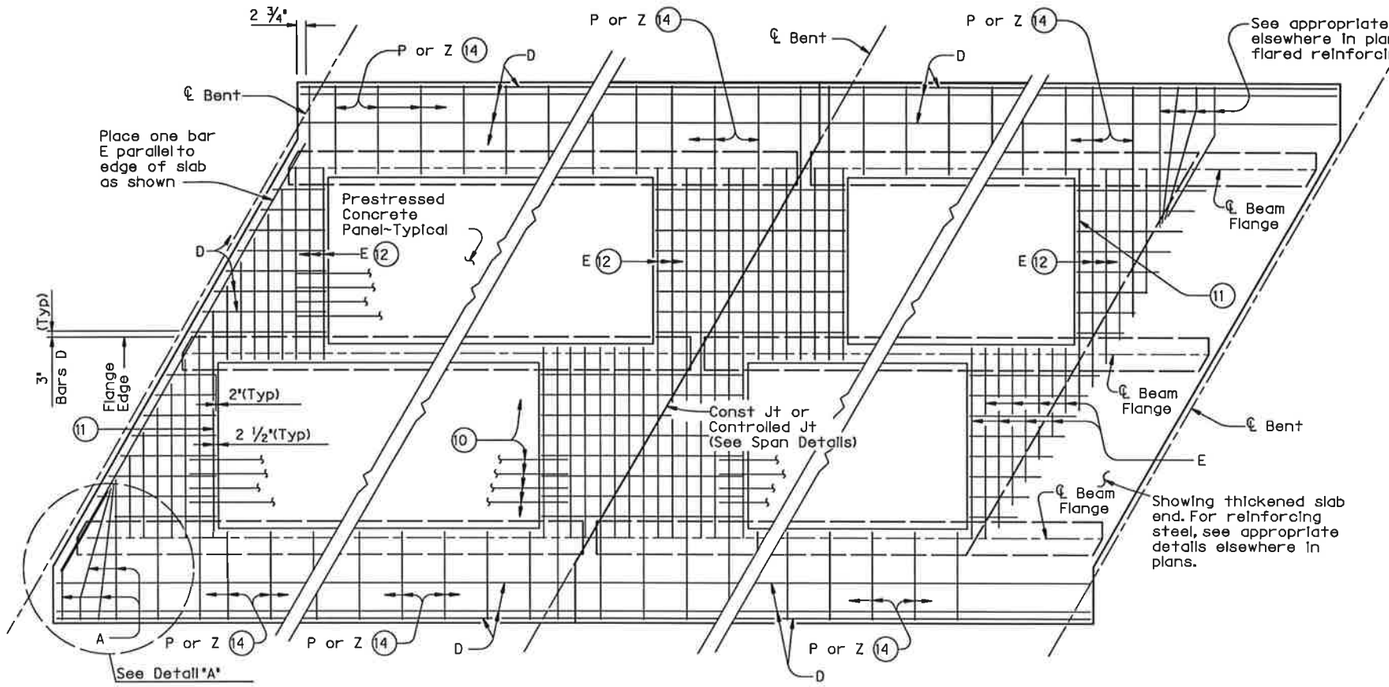

AT ALL SPAN ENDS UNLESS NOTED OTHERWISE

AT INTERIOR BENTS

AT THICKENED END SLABS ON STEEL, CONC I-BEAMS OR U-BEAMS

PLAN OF SLABS WITH NORMAL REINFORCEMENT

(Showing bottom reinforcing steel. See Span Details for top reinforcement steel.)

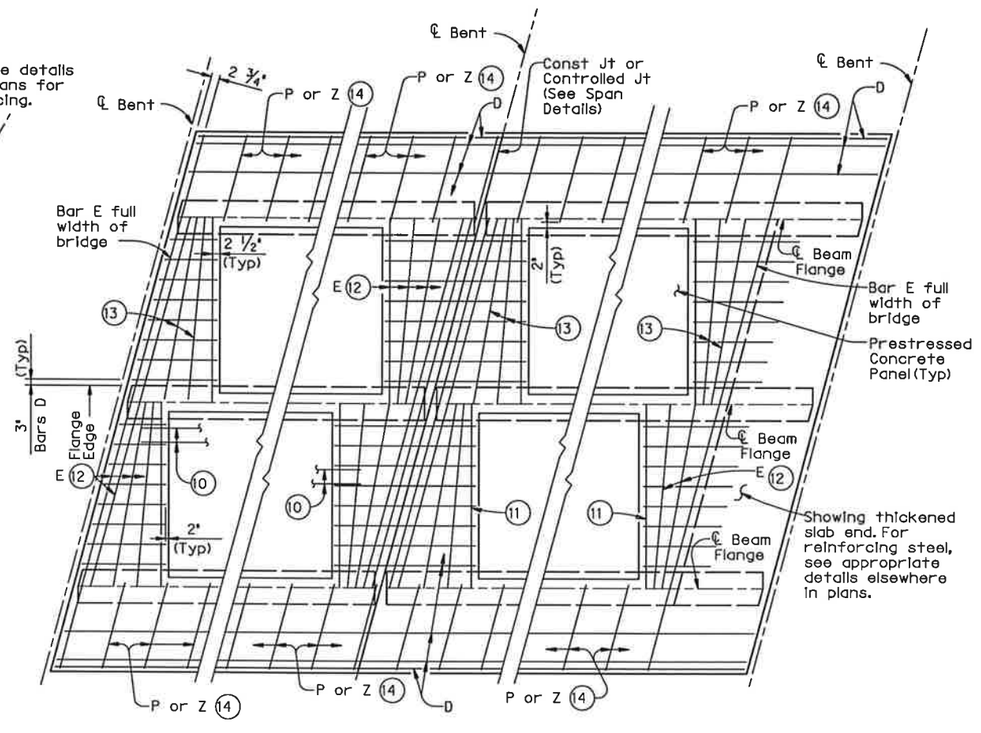

AT ALL SPAN ENDS UNLESS NOTED OTHERWISE

AT INTERIOR BENTS

AT THICKENED END SLABS ON STEEL, CONC I-BEAMS OR U-BEAMS

PLAN OF SLABS WITH SKEWED REINFORCEMENT

(Showing bottom reinforcing steel. See Span Details for top reinforcement steel.)

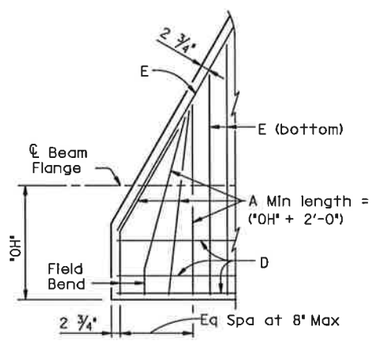

DETAIL "A"

APPROXIMATE QUANTITIES FOR ONE SQUARE FOOT OF SLAB (15)	
Slab Thickness (in.)	Class S Concrete CY
8	0.0123
8 1/4	0.0131
8 1/2	0.0139

(For Contractor's information only)

(8) Max Spacing as listed unless otherwise shown.

(10) At connection with cast-in-place slab, extend longitudinal panel reinforcement 1'-0" (+2", -0") past panel end. Alternatively, provide (#3) x 2'-0" dowels at 6" Max spacing and extend dowels 1'-0" past panel end.

(11) Maintain one Bar E(#5) parallel to panel ends (Typ).

(12) Bars E(#5) not continuous over beam flanges shall overlap beam flange 6" Min.

(13) Add flared Bars E(#5) (Min Spa = 2", Max Spa = 10") as required at panel ends.

(14) Where possible, Bars E(#5) may be extended into overhangs to replace Bars P(#4). Bars Z(#4) are required for sloped overhangs with U-Beams.

(15) These approximate quantities are for a typical square foot of cast-in-place slab over the PCP. They do not include an allowance for slab overhangs, thickened ends at diaphragms, or the portion between panels over the beams.

TABLE OF REINFORCING STEEL (8)		
BAR	SIZE	Max Spa (in.)
A	#5	~
D	#5	9
E	#5	6
P	#4	18
UP	#4	~
Z	#4	18

HL93 LOADING

Texas Department of Transportation
Bridge Division

PRESTRESSED CONCRETE PANELS

OPTIONAL DECK DETAILS FOR BEAM SPANS

PCP

FILE: pcpstdel.dgn	DN: TxDOT	CK: TxDOT	DW: TxDOT	CK: TxDOT
©TxDOT April 2006	DISTRICT	FEDERAL AID PROJECT		SHEET
REVISIONS				153
	COUNTY	CONTROL	SECT	JOB	HIGHWAY
				P-200612-01	

LEVELS DISPLAYED
ACC:

"CONSTRUCTION RECORD DRAWINGS_8-01-2009

DISCLAIMER:
The use of this standard is governed by the "Texas Engineering Practice Act". No warranty of any kind is made by TxDOT for any purpose whatsoever. TxDOT assumes no responsibility for the conversion of this standard to other formats or for incorrect results or damages resulting from its use.

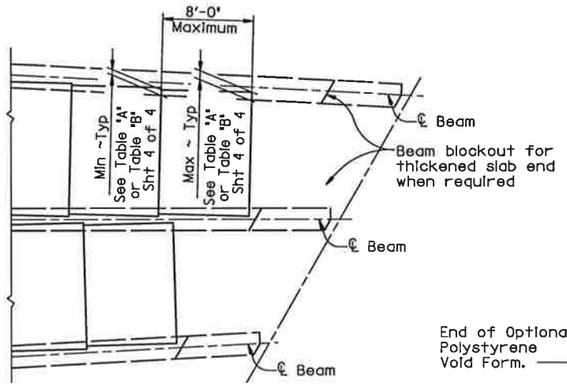

AT ENDS OF FLARED I-BEAMS
(Showing thickened slab end condition)

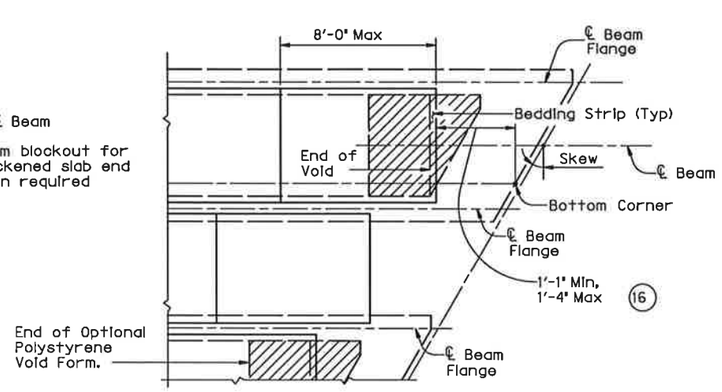

AT ENDS OF CONC U-BEAMS

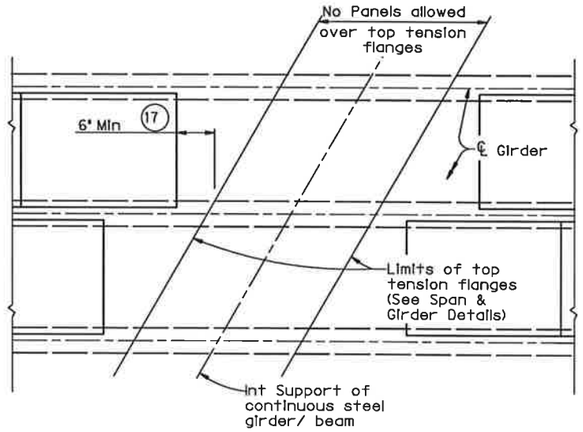

AT INT SUPPORTS OF CONTINUOUS STEEL GIRDERS

PART PLANS OF PANEL PLACEMENT

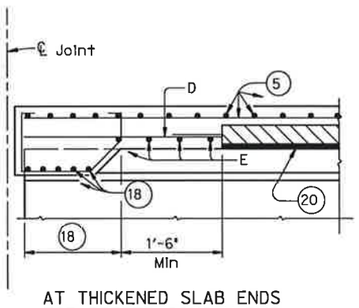

AT THICKENED SLAB ENDS FOR PRESTR CONC U-BMS

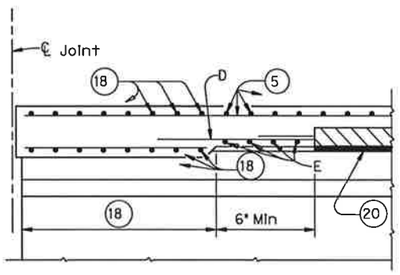

AT THICKENED SLAB ENDS FOR PRESTR CONC I-BMS AND STEEL BMS

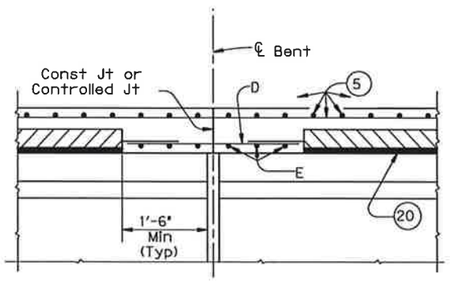

AT SLAB CONTINUOUS OVER CONVENTIONAL INTERIOR BENTS FOR ALL SIMPLE SPAN BMS

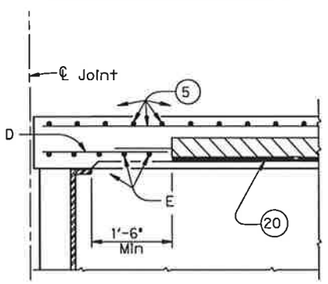

AT CONVENTIONAL END DIAPHRAGMS FOR STEEL BMS

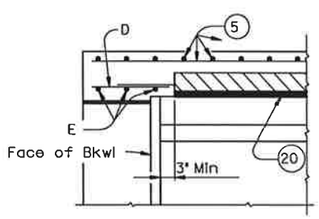

AT SLAB OVER ABUTMENT BACKWALL FOR ALL BMS

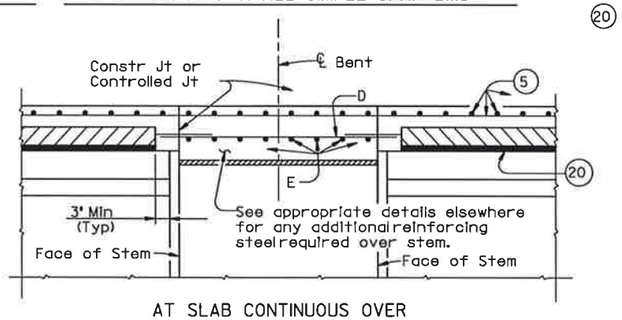

AT SLAB CONTINUOUS OVER INVERTED-T BENTS FOR ALL BMS

ELEVATIONS AT BEAM ENDS

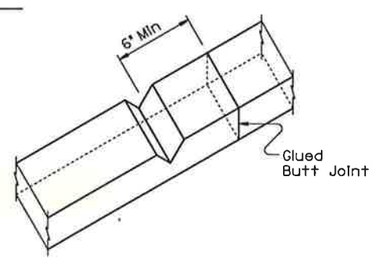

EXAMPLE OF BEDDING STRIPS BUTTED TOGETHER WITH V-NOTCH (20)

(5) See Span Details for top slab reinforcement and clear cover. Longitudinal top slab reinforcement may rest on top of prestressed concrete panels if necessary to maintain clear cover.

(8) Max Spacing as listed unless otherwise shown.

(16) For panel placement at ends of dapped end U-Beams, with Skews under 30°, use 2'-9" - 1" + or with Skews 30° thru 45°, use 3'-3" - 1". +

(17) Location of concrete placement sequence boundaries and bolted field splices should be considered by the contractor in determining panel limits.

(18) See appropriate thickened slab end details for reinforcing and limits of thickened slab end.

(19) When flange thickness differs or flange cover plates are used the Contractor shall compensate by using different thickness bedding strips to assure that the tops of Precast Panels are within 1/4" of alignment. See Normal Grading Detail for additional notes.

(20) Butt adjacent bedding strips together with adhesive. Cut v-notches, approx 1/4" deep, in the top of the bedding strips at 8' o.c..

TABLE OF REINFORCING STEEL (8)

BAR	SIZE	Max Spa (In.)
A	#5	~
D	#5	9
E	#5	6
P	#4	18
UP	#4	~
Z	#4	18

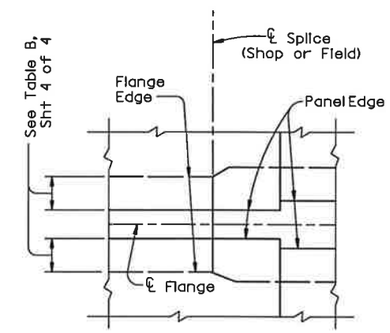

PLAN AT SPLICE
(Showing Steel Bms with flange width transition)

Contractor to field cut bedding strip to adjust for difference in flange thickness.

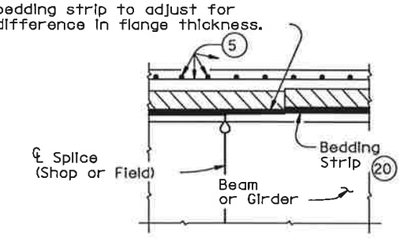

ELEVATION AT SPLICE
(Showing Steel Bms with different flange thickness)

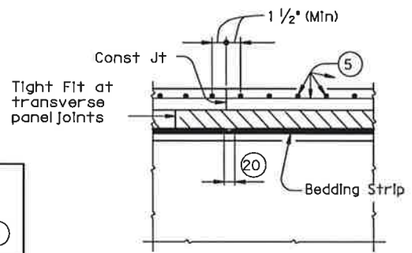

TRANSVERSE PANEL JOINTS AND SLAB CONST JOINTS

HL93 LOADING

SHEET 3 OF 4

Texas Department of Transportation
Bridge Division

PRESTRESSED CONCRETE PANELS

OPTIONAL DECK DETAILS FOR BEAM SPANS

PCP

FILE: pcpstdo1.dgn	DN: TxDOT	CK: TxDOT	DW: TxDOT	CK: TxDOT
©TxDOT April 2006	DISTRICT	FEDERAL AID PROJECT		SHEET
REVISIONS				154
	COUNTY	CONTROL	SECT	JOB	HIGHWAY

"CONSTRUCTION RECORD DRAWINGS_8-01-2009

P-200612-01

LEVELS DISPLAYED
ACC:

DISCLAIMER:
The use of this standard is governed by the "Texas Engineering Practice Act". No warranty of any kind is made by TxDOT for any purpose whatsoever. TxDOT assumes no responsibility for the conversion of this standard to other formats or for incorrect results or damages resulting from its use.

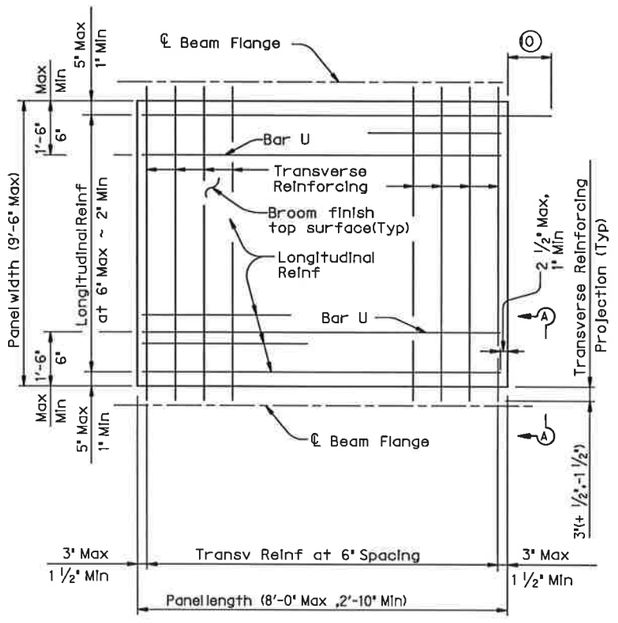

TYPICAL PANEL PLAN

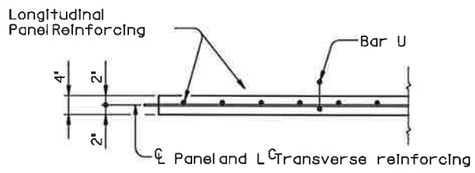

SECTION A-A

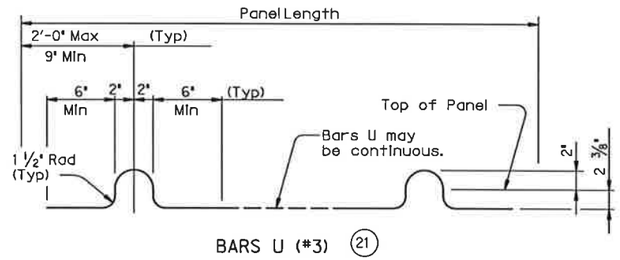

BARS U (#3) (21)

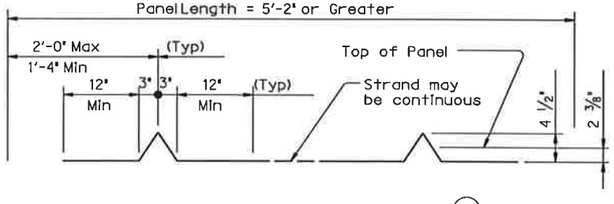

OPTIONAL STRAND FOR BARS U (22)

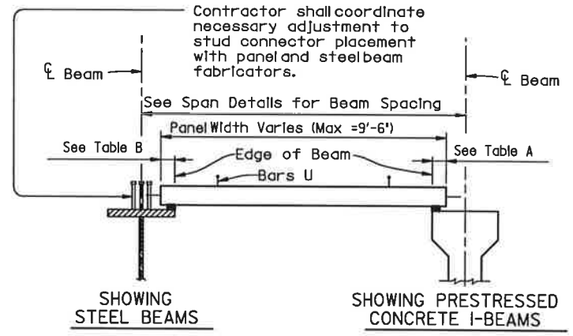

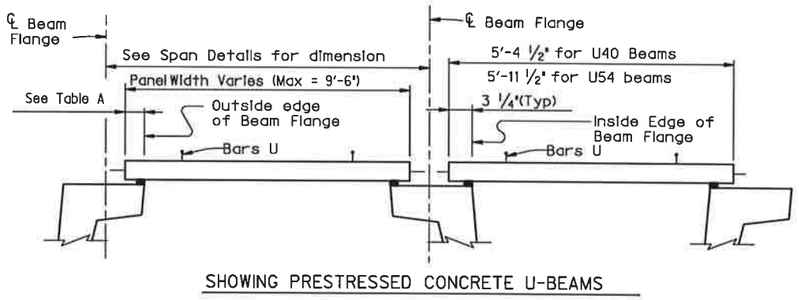

TYPICAL SECTIONS FOR DETERMINING PANEL WIDTH

(10) At connection with cast-in-place slab, extend longitudinal panel reinforcement 1'-0" (+2",-0") past panel end. Alternatively, provide (#3) x 2'-0" dowels at 6" Max Spacing and extend dowels 1'-0" past panel end.

(21) Four loops required per panel.

(22) Four loops required per panel. ⅜" or ½" strands may be used.

(23) Normal dimensions shall be used on spans with parallel beams. Maximum and Minimum dimensions apply only to spans with flared beams.

(24) See Normal Grading Detail on Sht 1 of 4 for lap requirements and bedding strip dimensions. Some laps shown in tables cannot utilize all bedding strip widths.

(25) One Splice allowed per panel.

TABLE A (23)(24)			
Beam Type	Normal (In.)	Min (In.)	Max (In.)
A	3	2 ½	3 ½
B	3	2 ½	3 ½
C	4	3	4 ½
IV	6	4	7 ½
VI	6 ½	4 ½	8 ½
U40	5 ½	5 ½	7
U54	5 ½	5 ½	7

TABLE B (23)(24)			
Top Flange Width	Normal (In.)	Min (In.)	Max (In.)
11" to 12"	2 ¾	2 ½	2 ¾
Over 12" to 15"	3 ¼	3	3 ¼
Over 15" to 18"	4	3	4 ¾
Over 18"	5	3 ½	6 ¼

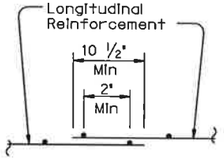

WELDED WIRE REINFORCEMENT (WWR) SPLICE DETAIL (25)

FABRICATION NOTES:

All concrete for panels is to be Class H. Use Class H (HPC) concrete for panels if required elsewhere in plans. Release strength f'ci=4000 psi. Minimum 28 day strength f'c=5000 psi.

Remove laitance from top panel surface.

A minimum of 90 percent of the top surface area shall have the required broom finish.

Shop drawings for the fabrication of panels will not require the Engineer's approval if fabrication is in accordance with the details shown on this standard.

A panel layout which identifies location of each panel shall be developed by the fabricator. Permanently mark each panel in accordance with the panel layout. A copy of the layout is to be provided to the Engineer.

TRANSVERSE PANEL REINFORCEMENT:

For panel widths over 5', use ⅜" or ½" Dia (270k) prestressing strands with an initial tension of 16.1 kips per strand.

For panel widths over 3'-6" up to and including 5', use ⅜" or ½" Dia (270k) prestressing strands with an initial tension of 16.1 kip per strand. Optionally, #4 Grade 60 reinforcing bars may be used in lieu of prestressed strands.

For panel widths up to 3'-6", use #4 Grade 60 reinforcing bars (prestressed strands are not allowed).

Place transverse panel reinforcement at panel centroid and space at 6" Max.

LONGITUDINAL PANEL REINFORCEMENT:

Any of the following options may be used for longitudinal panel reinforcement:

1. (#3) Grade 60 reinforcing steel at 6" Max Spacing. No splices allowed.
2. ⅜" Dia prestressing strands at 4 ½" Max Spacing (unstressed). No splices allowed.
3. ½" Dia prestressing strands at 6" Max Spacing (unstressed). No splices allowed.
4. Deformed Welded Wire Reinforcement (WWR) (ASTM A497) providing 0.22 sq in per foot of panel width. Wires larger than D11 not permitted. Provide transverse wires to ensure proper handling of reinforcing. One splice per panel is allowed. See WWR Splice Detail.

No combination of longitudinal reinforcement options in a panel is allowed.

Place longitudinal panel reinforcement above transverse panel reinforcement.

"CONSTRUCTION RECORD DRAWINGS_8-01-2009

HL93 LOADING SHEET 4 OF 4

Texas Department of Transportation
Bridge Division

PRESTRESSED CONCRETE PANELS

OPTIONAL DECK DETAILS FOR BEAM SPANS

PCP

FILE: pcpstdel.dgn	DN: TxDOT	CK: TxDOT	DW: TxDOT	CK: TxDOT
©TxDOT April 2006	DISTRICT	FEDERAL AID PROJECT		SHEET
REVISIONS				155
	COUNTY	CONTROL	SECT	JOB	HIGHWAY

P-200612-01

ACC:
LEVELS DISPLAYED
1

DISCLAIMER:
The use of this standard is governed by the "Texas Engineering Practice Act". No warranty of any kind is made by TxDOT for any purpose whatsoever. TxDOT assumes no responsibility for the conversion of this standard to other formats or for incorrect results or damages resulting from its use.

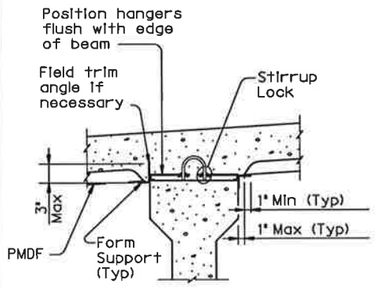

SHOWING PRESTR CONC I-BMS WITH STIRRUP LOCKS

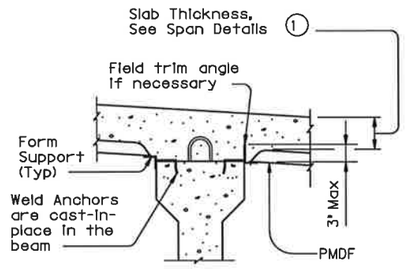

SHOWING PRESTR CONC I-BMS WITH WELD ANCHORS

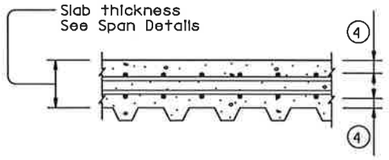

TYP LONGITUDINAL SLAB SECTION

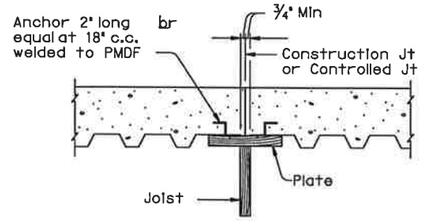

Note: In spans where PMD forms are used, timber forms shall be used at construction joints.
Adequate provision shall be made to support edge of metal form and to provide anchorage of metal form to slab concrete where joined to wood forms.

SECTION THRU CONSTRUCTION JOINT

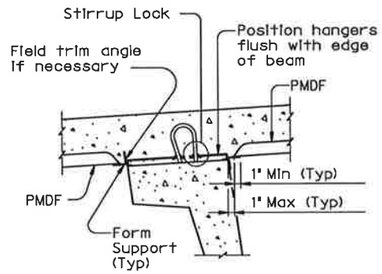

SHOWING U-BEAMS WITH STIRRUP LOCKS

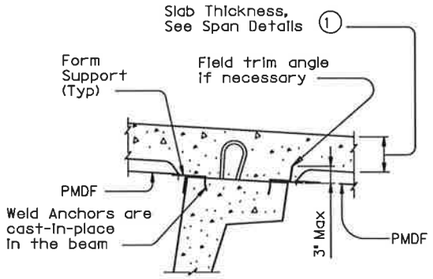

SHOWING U-BEAMS WITH WELD ANCHORS

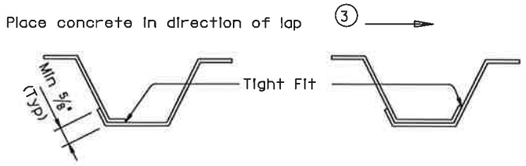

SIDE LAP DETAILS

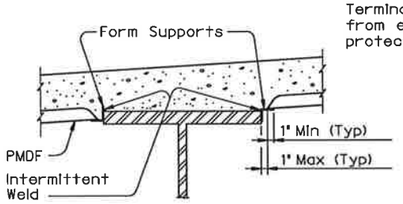

SHOWING STEEL BEAMS AT COMPRESSION FLANGES

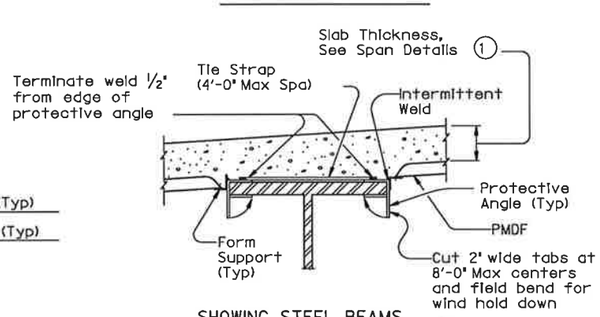

SHOWING STEEL BEAMS AT TENSION FLANGES ②

TYPICAL TRANSVERSE SECTIONS

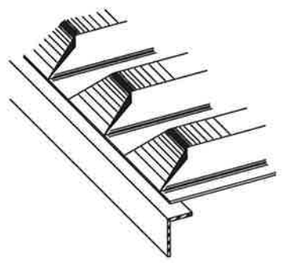

PRECLOSED

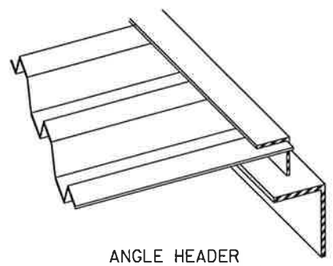

ANGLE HEADER

NOTE: This type is to be used for skewed ends only.

TYPES OF END CLOSURES

① Slab thickness minus 5/8" lf corrugations match reinforcing bars.

② Welding of form supports to tension flanges will not be permitted.
Other methods of providing wind hold down resistance for PMDF in tension flange zones will be considered. At least one layer of sheet metal must be provided between the flange and the weld joint.

③ The direction of concrete placement will be such that the upper layer of the form overlap is loaded first.

④ See Span details for cover requirements.

FOR PRESTR CONC U-BEAM BRIDGES:
Size, spacing, and orientation of bottom mat of slab reinforcement shall match the top mat of reinforcing shown on the span details except all bottom mat bars are to be #5.

DESIGN NOTES:
As a minimum, PMDF and support angles shall be designed for the dead load of the form, reinforcement and concrete plus 50 psf for construction loads. Flexural stresses due to these design loads shall not exceed 75 percent of the yield strength of the steel. Allowable stress for weld metal shall be 12,400 psi.
Maximum deflection under the weight of forms, reinforcement and concrete or 120 psf, whichever is greater, shall not exceed the following:

1/180 of the form design span, but not more than 0.50", for design spans of 10' or less.

1/240 of the form design span, but not more than 0.75", for design spans greater than 10'.

The form design span shall not be less than the clear distance between beam flanges, measured parallel to the form flutes, minus 2".

CONSTRUCTION NOTES:
Form sheets shall not be permitted to rest directly on the top of beam flanges. Form sheets shall be securely fastened to form supports and shall have a minimum bearing length of one inch at each end. Form supports shall be placed in direct contact with beam flanges.
All attachments shall be made by permissible welds, screws, bolts, clips or other means shown on the the forming plans. All sheet metal assembly screws shall be installed with torque-limiting devices to prevent stripping. Only welds or bolts shall be used to support vertical loads.
Welding and welds shall be in accordance with the provisions of Item 448, "Structural Field Welding", pertaining to fillet welds. All welds shall be made by a qualified welder in accordance with Item 448.
All permanently exposed form metal, where the galvanized coating has been damaged, shall be thoroughly cleaned and repaired in accordance with Item 445, "Galvanizing". Minor heat discoloration in areas of welds need not be touched up.
Flutes shall line up uniformly across the entire width of the structure where main reinforcing steel is located in the flute.
Construction joints will not be permitted unless shown on the plans. The location of and forming details for any construction joint used shall be shown on the forming plans. Forms below a construction joint must be removed after curing of the slab.
A sequence for uniform vibration of concrete shall be approved by the Engineer prior to concrete placement. Attention must be given to prevent damage to the forms, yet provide proper vibration to prevent voids or honeycomb in the flutes and at headers and/or construction joints.

GENERAL NOTES:
Steel for Permanent Metal Deck Forms (PMDF) and support angles shall conform to ASTM A653, Structural Steel (SS), with coating designation G165. Steel shall have a minimum yield strength of 33 ksi. Minimum thickness of PMDF is 20 gage and that of support angles and protective angles is 12 gage.
Submit two copies of forming plans for PMDF to the Engineer. These plans must show all essential details of proposed form sheets, closures, fasteners, supports, connectors, special conditions and size and location of welds. These plans shall clearly show areas of tension flanges for steel beams and provisions for protecting the tension flanges from welding notch effects by inclusion of separating sheet metal or other positive method. These plans must be designed, signed, and sealed by a licensed professional engineer. Department approval of these plans is not required, but the Department reserves the right to require modifications to the plans. The Contractor is responsible for the adequacy of these plans.
The details and notes shown on this standard are to be used as a guide in preparation of the forming plans.
All material, labor, tools and incidentals necessary to form a bridge deck with Permanent Metal Deck Forms is considered subsidiary to Item 422, "Reinforced Concrete Slab".

CONSTRUCTION RECORD DRAWINGS_8-01-2009

Texas Department of Transportation
Bridge Division

PERMANENT METAL DECK FORMS

PMDF

FILE: pmdfst01.dgn	DN: TxDOT	CK: TxDOT	DW: TxDOT	CK: TxDOT
©TxDOT April 2006	DISTRICT	FEDERAL AID PROJECT		SHEET 156
REVISIONS				
	COUNTY	CONTROL	SECT	JOB	HIGHWAY
				P-200612-01

PATH:
LEVELS DISPLAYED

DISCLAIMER:
The use of this standard is governed by the "Texas Engineering Practice Act". No warranty of any kind is made by TxDOT for any purpose whatsoever. TxDOT disclaims responsibility for the conversion of this standard to other formats or for incorrect results or damages resulting from its use.

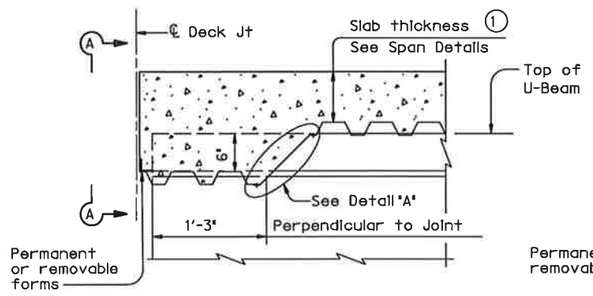

AT THICKENED SLAB END FOR U-BEAMS

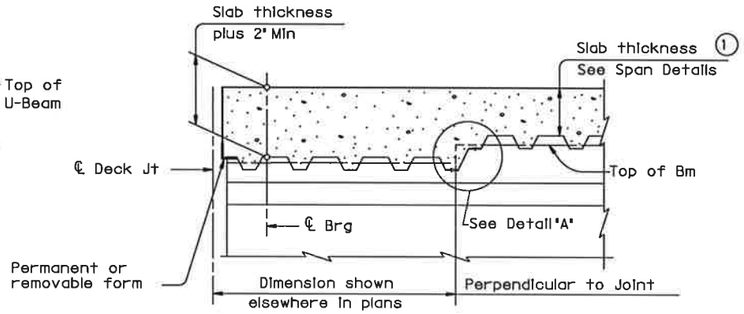

AT THICKENED SLAB END FOR PRESTRESSED I-BEAMS AND STEEL BEAMS

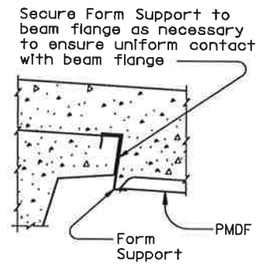

SECTION A-A

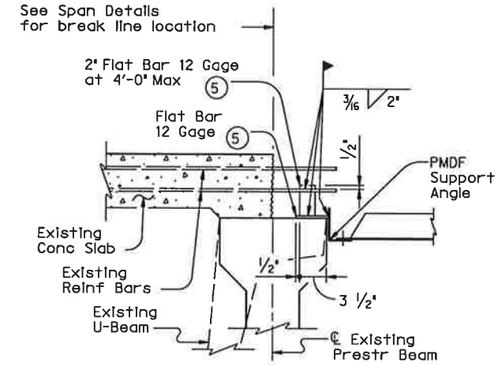

SHOWING PRESTRESSED CONCRETE I-BEAMS AND U-BEAMS

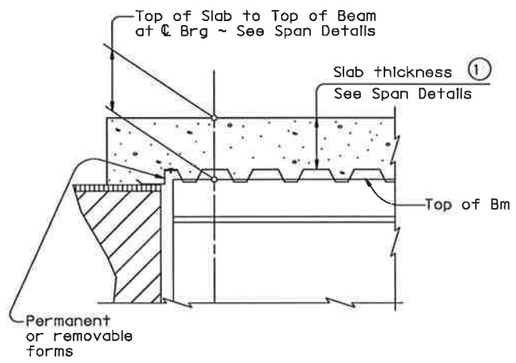

AT SLAB OVER ABUT BKWL OR INV TEE STEM FOR CONC BEAMS WITHOUT THICKENED SLAB END

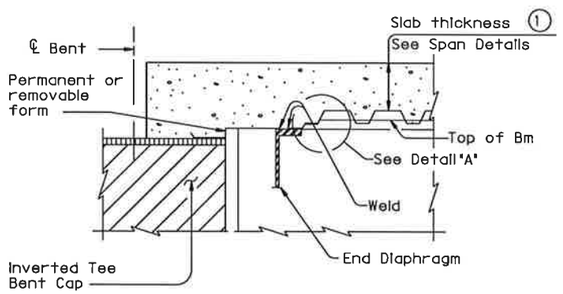

AT SLAB OVER INV TEE STEM FOR STEEL BEAMS WITHOUT THICKENED SLAB END

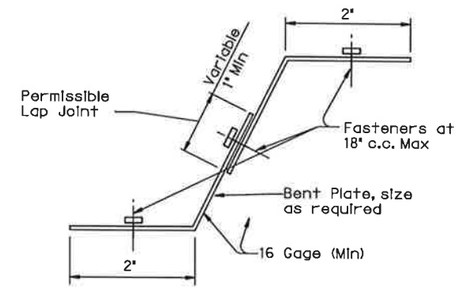

DETAIL "A"

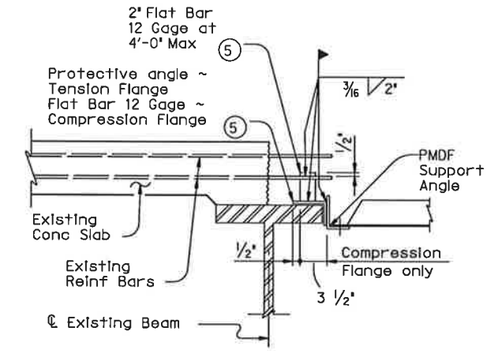

SHOWING STEEL BEAMS

WIDENING DETAILS

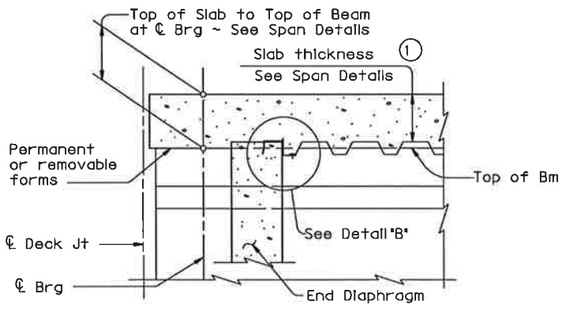

AT CONC END DIAPHRAGM FOR PRESTRESSED I-BEAMS AND STEEL BEAMS

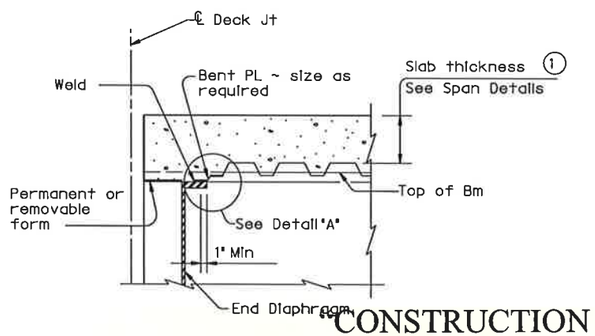

AT END DIAPHRAGM FOR STEEL BEAMS WITHOUT THICKENED SLAB END

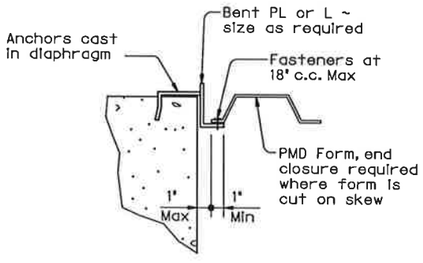

DETAIL "B"

(1) Slab thickness minus 5/8" if corrugations match reinforcing bars

(5) Minimum yield stress of 12 Gage bars shall be 40 ksi

DETAILS AT ENDS OF BEAMS

CONSTRUCTION RECORD DRAWINGS_8-01-2009

SHEET 2 OF 2

Texas Department of Transportation
Bridge Division

PERMANENT METAL DECK FORMS

PMDF

FILE: pmdfstel.dgn	DN: TxDOT	CK: TxDOT	DW: TxDOT	CK: TxDOT
©TxDOT April 2006	DISTRICT	FEDERAL AID PROJECT		SHEET
REVISIONS				157
	COUNTY	CONTROL	SECT	JOB	HIGHWAY
					P-200612-01

PATH:
LEVELS DISPLAYED

DISCLAIMER:
The use of this standard is governed by the "Texas Engineering Practice Act". No warranty of any kind is made by TxDOT for any purpose whatsoever. TxDOT assumes no responsibility for the conversion of this standard to other formats or for incorrect results or damages resulting from its use.

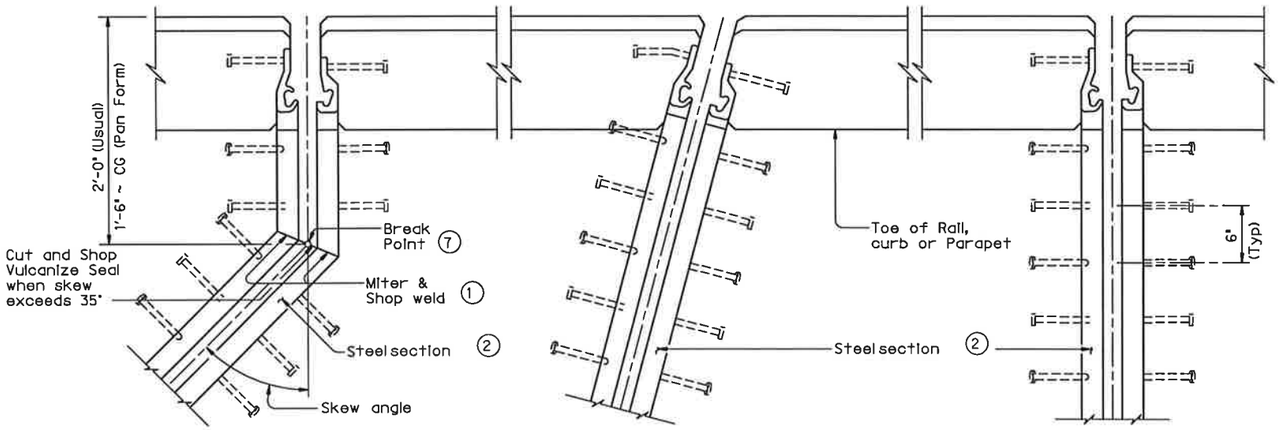

SHOWING SKEWS WITH SLAB BREAKBACKS

SHOWING SKEWS WITHOUT SLAB BREAKBACKS

SHOWING WITHOUT SKEWS AND SLAB BREAKBACKS

PLANS OF END CONDITIONS

SHOWN WITH UPTURNS

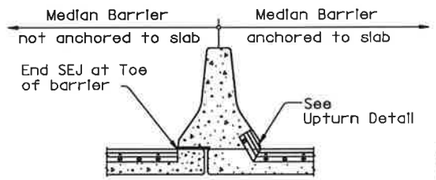

WITH OPEN DECK JT BELOW MEDIAN BARRIER

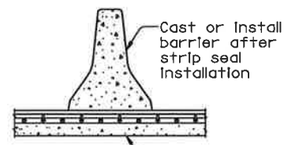

AT MEDIAN BARRIER

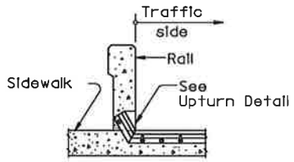

AT SIDEWALK BEHIND BRIDGE RAIL

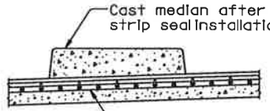

AT RAISED MEDIAN

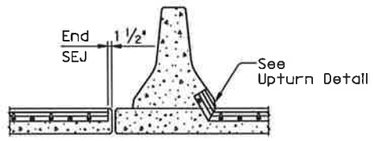

WITH OPEN DECK JT ADJACENT TO MEDIAN BARRIER

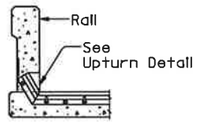

AT CONCRETE BRIDGE RAIL

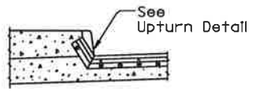

AT SIDEWALK

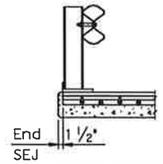

AT STEEL POST BRIDGE RAIL

TYPICAL SECTIONS (5)

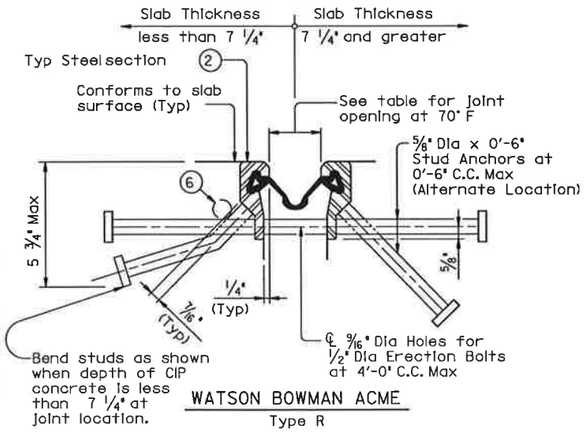

WATSON BOWMAN ACME
Type R

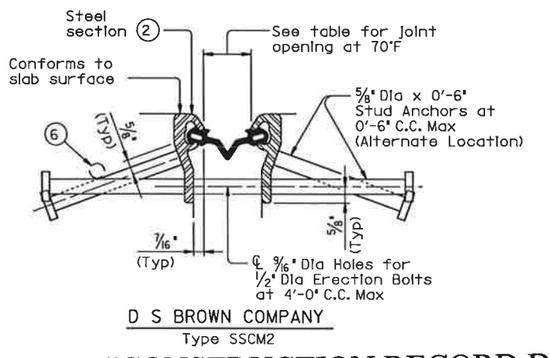

D S BROWN COMPANY
Type SSCM2

SECTIONS THRU SEALED EXPANSION JOINT

"CONSTRUCTION RECORD DRAWINGS_8-01-2009

TABLE OF SEALED EXPANSION JOINT INFORMATION

MANUFACTURER	STEEL SECTION (2)	NEOPRENE STRIP SEAL			
		4" JOINT		5" JOINT	
		Seal Type	Joint Opening (3)	Seal Type	Joint Opening (3)
D.S. Brown	Type SSCM2	A2R-400	1 ¾"	A2R-XTRA	2"
Watson Bowmon Acme	Type R	SE-400	1 ¾"	SE-500	2"

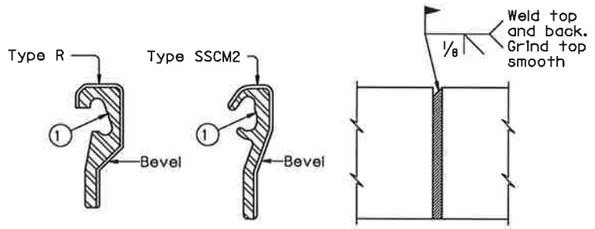

WELD LIMITS | WELD LIMITS | REAR VIEW

BEVEL AT FIELD SPLICE

Weld preparation shall be done by shop

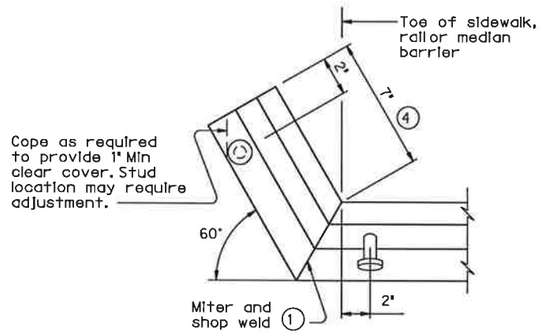

UPTURN DETAIL

(1) Remove all burrs which will be in contact with seal prior to making splice.

(2) Shape of steel section shown is typical. Variations in sections must be approved by the Engineer.

(3) These openings are also the recommended minimum installation openings.

(4) Reduce for sidewalk or parapet heights less than 6".

(5) Other conditions affecting the joint profile should be noted elsewhere.

(6) Transverse bars in conflict with SEJ studs in either the bridge slab or approach slab shall be moved to rest at the junction of the studs.

(7) See Span details for location of break point.

FABRICATION NOTES:

Corresponding sections of Sealed Exp Jts shall be temporarily shop assembled, checked for fit, and match marked for shipment.

Erection holes shall be punched so as to line up when Sealed Exp Jts are in their final position.

Weld studs in accordance with AWS D1.1.

The neoprene seal shall be continuous and included in the price bid for Sealed Exp Jt.

Steel sections shall be shipped in convenient lengths of 24'-0" Max and 10'-0" Min unless otherwise necessary for stage construction or widenings. One shop splice will be permitted in each shipping length provided no piece is less than 2'-0" in length and sufficient studs are added to limit the stud to shop or field splice distance to 2" Min and 4" Max.

Shop and field splices shall be made by butt welding with areas in contact with seal to be ground smooth.

Paint portions of steel sections not in contact with concrete with the primer specified for System II paint.

Shop drawings for the fabrication of Sealed Expansion Joints will not require the Engineer's approval if fabrication is in accordance with the details shown on this standard.

An SEJ Layout which identifies location of each steel section shall be developed. Permanently mark each steel section in accordance with the SEJ Layout.

CONSTRUCTION NOTES:

The Contractor shall arrange for securing the Sealed Exp Jt in position, and placing to the proper grade and alignment by welding braces to adjacent reinf steel, to prestressed beam stirrups, or to anchors cast in concrete diaphragms. Cost of temporary bracing is to be included in the price bid for Sealed Exp Jt.

After bracing and welding the steel section, remove the erection bolts and spacers and seal erection holes before placing concrete.

Seal cavity shall be cleaned and prepared for seal installation as per the manufacturer's suggested installation procedures.

GENERAL NOTES:

Sealed Exp Jts shall be provided in the size and at locations shown on plans.

Minimum slab and overhang thickness required for the use of SEJ-A is 6 ½".

Texas Department of Transportation
Bridge Division

SEALED EXPANSION JOINT TYPE A WITHOUT OVERLAY

SEJ-A

FILE: sejastel.dgn	DN: TxDOT	CK: TxDOT	DW: TxDOT	CK: TxDOT
©TxDOT April 2006	DISTRICT	FEDERAL AID PROJECT		SHEET
REVISIONS				158
	COUNTY	CONTROL	SECT	JOB	HIGHWAY
				P-200612-01	

PATH:

LEVELS DISPLAYED

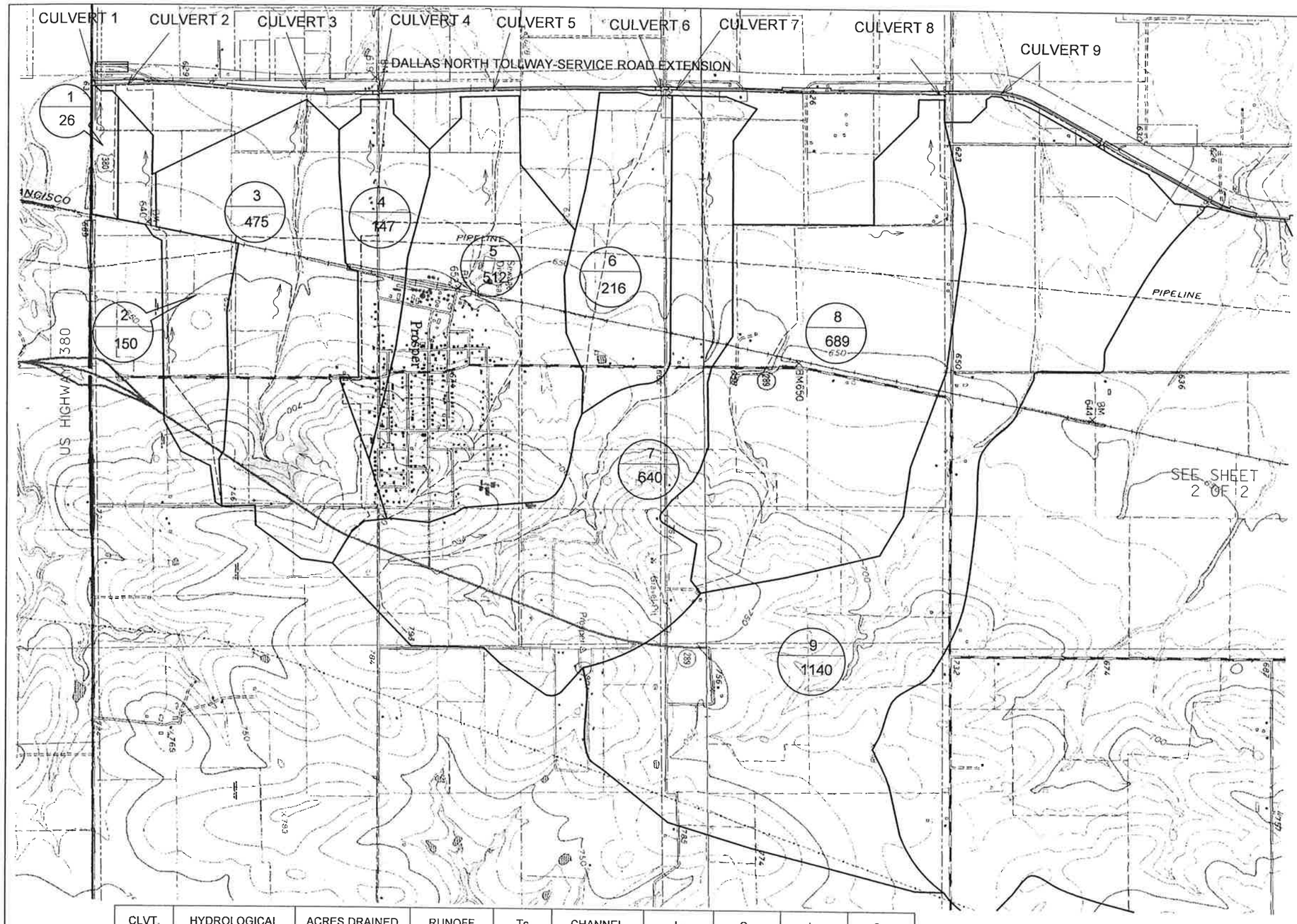

"CONSTRUCTION RECORD DRAWINGS_8-01-2009

CLVT. NO.	HYDROLOGICAL METHOD USED	ACRES DRAINED (ACRES)	RUNOFF COEFF. "C"	Tc (min.)	CHANNEL LENGTH (mi)	I_{50} (in/hr)	Q_{50} (cfs)	I_{100} (in/hr)	Q_{100} (cfs)
1	RATIONAL	26	0.3	16.53	0.54	6.80	53	7.38	58
2	RATIONAL	150	0.3	27.78	1.56	5.50	248	5.95	268
3	SCS METHOD	475	N/A	35.38	1.88		2010		2280
4	RATIONAL	147	0.4	15.35	1.11	7.00	412	7.60	447
5	SCS METHOD	512	N/A	33.09	1.83		2200		2325
6	SCS METHOD	216	N/A	27.02	1.18		945		1070
7	SCS METHOD	640	N/A	47.30	1.62		2080		2380
8	SCS METHOD	689	N/A	50.70	0.45		2360		2535
9	*	1140	N/A				2235		2615

NOTE: RAINFALL INTENSITIES BASED ON DATA IN TECHNICAL PAPERS NWS HYDRO-35, JUNE 1977 (5 TO 60 MINUTE DURATIONS) AND TECHNICAL PAPER NO. 40, MAY 1961 (120 TO 360 MINUTE DURATIONS).

* PER LIGHT RANCH DRAINAGE STUDY (RAINFALL TABLE REVISED BY HALFF)

STATE OF TEXAS
DENNIS D. SATRE
71590
PROFESSIONAL ENGINEER
Dennis D. Satre 12/28/06

NO.	DATE	REVISION	APPROV.

DALLAS PARKWAY EXTENSION

COLLIN COUNTY

OFFSITE DRAINAGE AREA MAP

Halff Associates, Inc.
ENGINEERS • ARCHITECTS • SCIENTISTS • PLANNERS • SURVEYORS

1 OF 2

DRAWN RLK DATE APRIL 2006
CHECKED DDS DATE
DESIGNED DATE
SCALE

CONTRACT NO.

SHEET 159 OF 270

12/19/2006 P-200612-01

11:22:47 AM
I:\23000s\23819\FRISCO\DGN\23819SDMAP01.dgn

I:\23000s\23819\FRISCO\DGN\23819SDMAP02.dgn

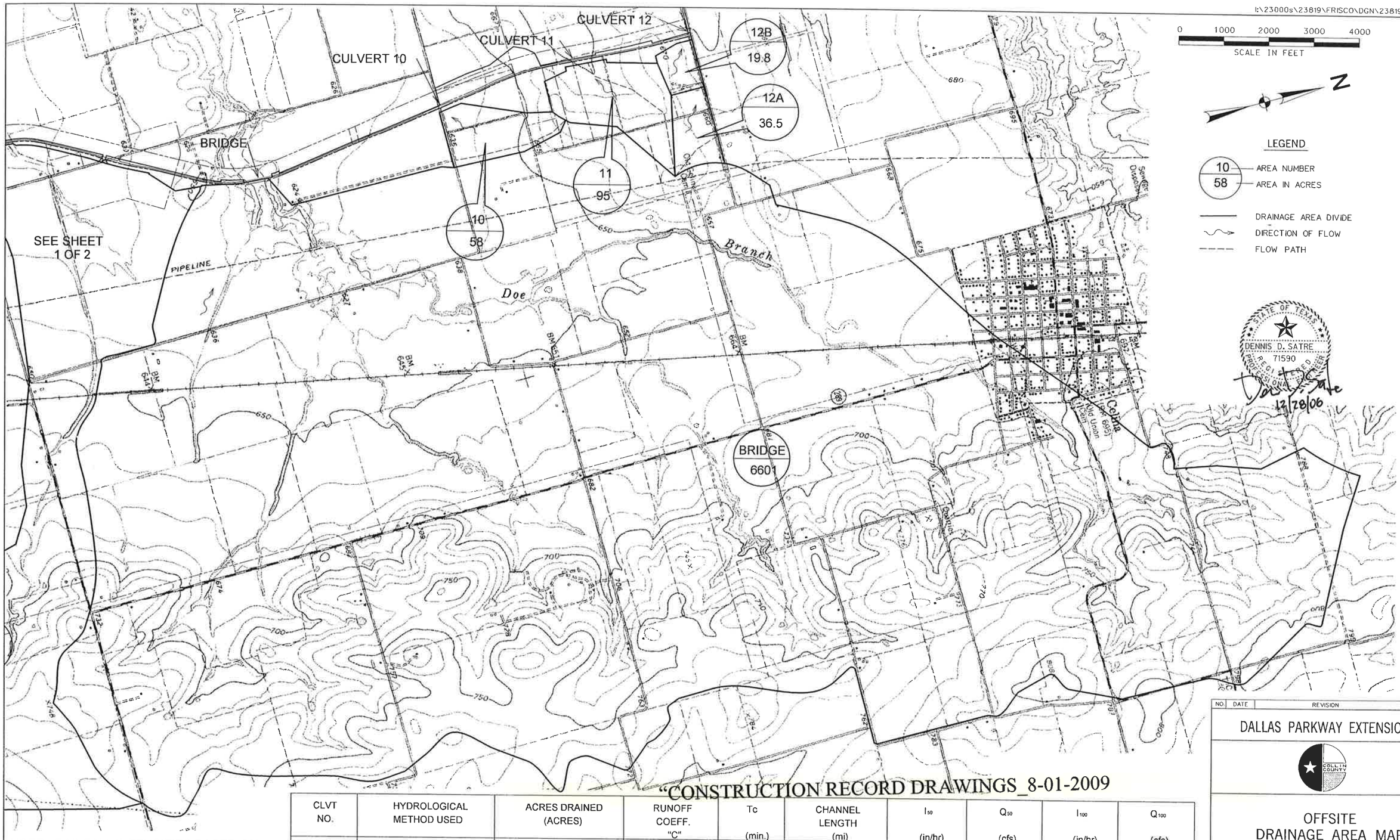

STATE OF TEXAS
DENNIS D. SATRE
71590
LICENSED PROFESSIONAL ENGINEER
12/28/06

"CONSTRUCTION RECORD DRAWINGS_8-01-2009

CLVT NO.	HYDROLOGICAL METHOD USED	ACRES DRAINED (ACRES)	RUNOFF COEFF. "C"	Tc (min.)	CHANNEL LENGTH (mi)	I_{50} (in/hr)	Q_{50} (cfs)	I_{100} (in/hr)	Q_{100} (cfs)
BRIDGE	*	6601	N/A				14600		17435
10	RATIONAL	58	0.9	16.85	0.66	6.80	355	7.40	386
11	RATIONAL	95	0.9	16.40	0.66	6.80	581	7.40	633
12A	RATIONAL	36.5	0.9	15.00	0.51	6.90	227	7.60	250
12B	RATIONAL	19.8	0.9	10.00	0.27	8.00	143	8.80	157

* PER LIGHT RANCH DRAINAGE STUDY (RAINFALL TABLE REVISED BY HALFF)

NOTE: RAINFALL INTENSITIES BASED ON DATA IN TECHNICAL PAPERS NWS HYDRO-35, JUNE 1977 (5 TO 60 MINUTE DURATIONS) AND TECHNICAL PAPER NO. 40, MAY 1961 (120 TO 360 MINUTE DURATIONS).

NO.	DATE	REVISION	APPROV.

DALLAS PARKWAY EXTENSION

COLLIN COUNTY

OFFSITE DRAINAGE AREA MAP

1 OF 2

Halff Associates, Inc.
ENGINEERS · ARCHITECTS · SCIENTISTS · PLANNERS · SURVEYORS

DRAWN MDB DATE DEC 2006 DESIGNED DATE
CHECKED DDS DATE SCALE

CONTRACT NO. SHEET 160 OF 271

11:23:14 AM
I:\23000s\23819\FRISCO\DGN\23819SDMAP02.dgn

12/19/2006

P-200613-01

i:\23000s\23819\frisco\dgn\23819sdmap03.dgn

0 250 500 750 1000
SCALE IN FEET

N

B1 0.73
B2 1.88
C1 1.32
C2 1.69
C3 1.13
C4 1.70
C5 1.03
C6 1.78
C7 0.95
C8 1.45
C11 2.59
C12 1.26
D1 0.99
D2 1.14

1645 1650 1655 1660 1665 1670 1675 1680 1685 1690 1695

℄ DNT
CR 27
EXIST ROW
MATCH LINE STA 1700+00

A1 1.32
A2 2.76
A2–1 7.51
C2–1 19.10
C4–1 18.18
C6–1 11.54
C9 1.95
C9–1 3.07
C10 1.60
C11–1 7.51
D2–1 2.96
E1 1.52

℄ US 380

CULVERT 1 CULVERT 2 CULVERT 3 CULVERT 4

LEGEND
AREA DESIGNATION
SIZE (ACRES)
WATERSHED BOUNDARY

"CONSTRUCTION RECORD DRAWINGS_8-01-2009

E2 2.09
F1 0.94
F3 2.44
F4 1.34
F5 1.65
G4 12.0

1700 1705 1710 1715 1720 1725 1730 1735 1740 1745 1750

EXIST ROW
℄ DNT
CR 27
MATCH LINE STA 1700+00
MATCH LINE STA 1750+00

E2–1 15.43
F2 1.33
F6 61.80
G1 1.27
G2 1.01
G3 1.50
H1 1.91

CULVERT 5 CULVERT 6 CULVERT 7

SEE OFFSITE DRAINAGE AREA MAP FOR DEPICTION OF REMAINING DRAINAGE AREA LIMITS, TYP.

STATE OF TEXAS
DENNIS D. SATRE
71590
REGISTERED PROFESSIONAL ENGINEER
12/28/06

NO.	DATE	REVISION	APPROV.

DALLAS PARKWAY EXTENSION

COLLIN COUNTY, TEXAS

ROADWAY DRAINAGE AREA MAP

1 OF 3

Halff Associates, Inc.
ENGINEERS · ARCHITECTS · SCIENTISTS · PLANNERS · SURVEYORS

DRAWN MDB DATE DEC 2006 DESIGNED DDS DATE
CHECKED DDS DATE SCALE

BOND PROJECT NO. 03-13 SHEET 161 OF 271

P-200612.01

12/28/2006 9:14:37 AM

9:14:37 AM
i:\23000s\23819\frisco\dgn\23819sdmap03.dgn

0 250 500 750 1000

SCALE IN FEET

N

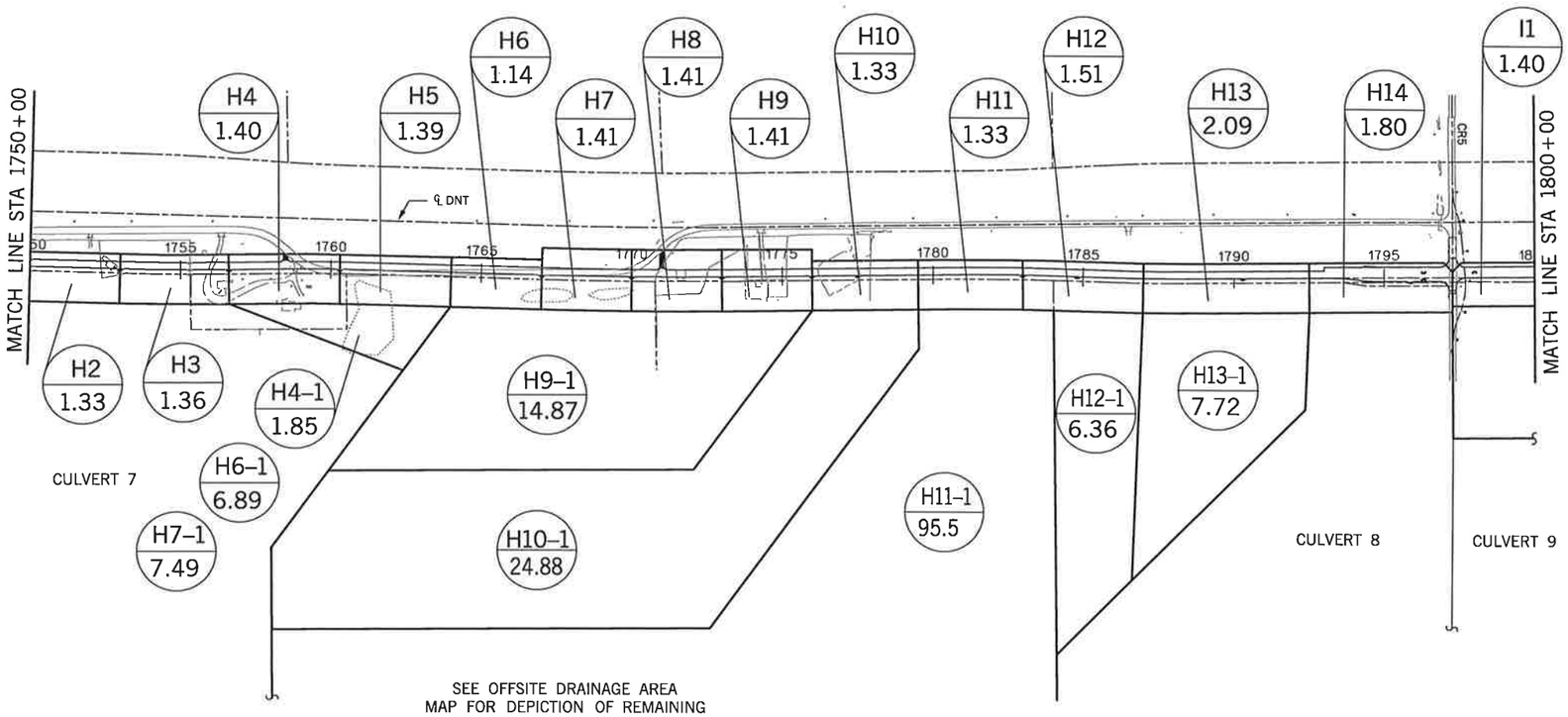

SEE OFFSITE DRAINAGE AREA MAP FOR DEPICTION OF REMAINING DRAINAGE AREA LIMITS, TYP.

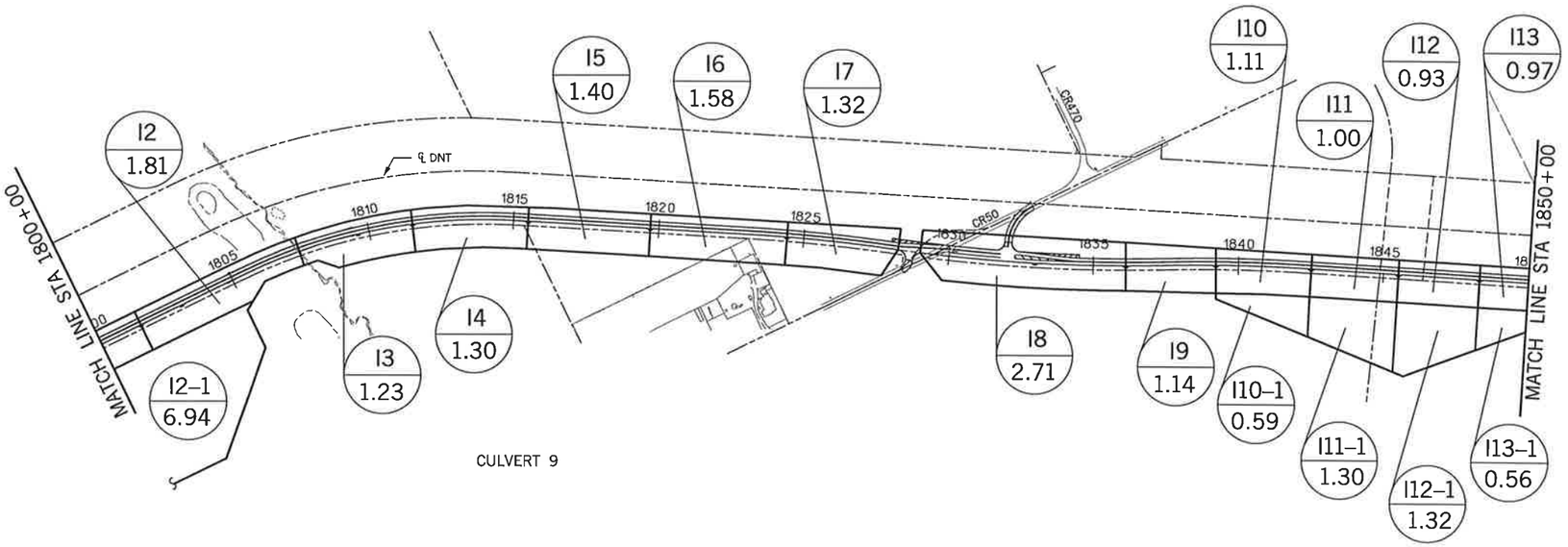

N

LEGEND

- AREA DESIGNATION
- SIZE (ACRES)
- WATERSHED BOUNDARY

STATE OF TEXAS
DENNIS D. SATRE
71590
REGISTERED PROFESSIONAL ENGINEER
12/28/06

NO.	DATE	REVISION	APPROV.

DALLAS PARKWAY EXTENSION

COLLIN COUNTY

ROADWAY DRAINAGE AREA MAP

2 OF 3

Halff Associates, Inc.
ENGINEERS · ARCHITECTS · SCIENTISTS · PLANNERS · SURVEYORS

DRAWN MDB	DATE DEC 2006	DESIGNED DDS	DATE
CHECKED DDS	DATE	SCALE	

BOND PROJECT NO. 03-13 SHEET 162 OF 271

P-200612-01

"CONSTRUCTION RECORD DRAWINGS_8-01-2009

i:\23000s\23819\frisco\dgn\23819sdmap05.dgn

0 250 500 750 1000

SCALE IN FEET

N

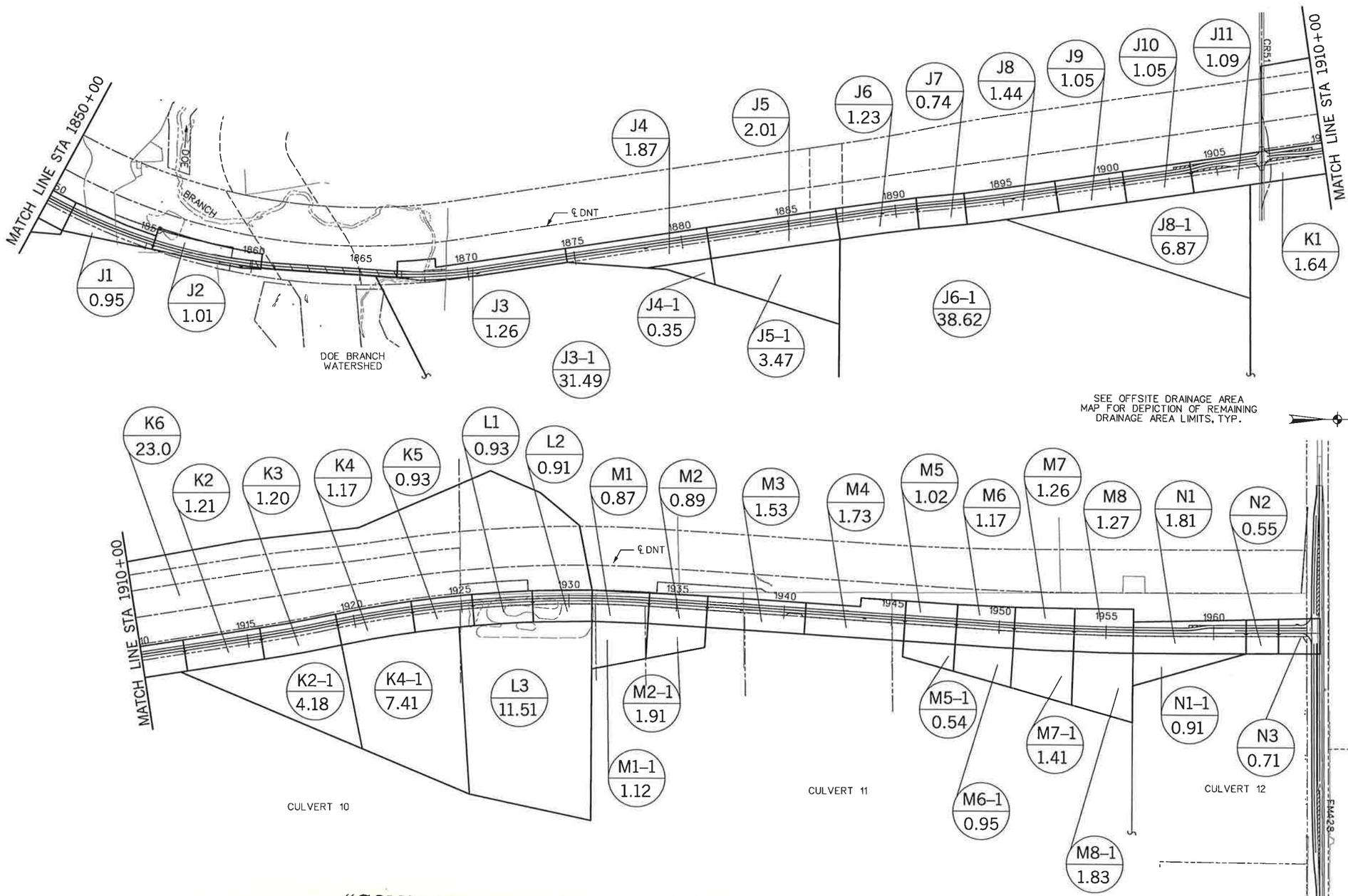

LEGEND

AREA DESIGNATION

SIZE (ACRES)

WATERSHED BOUNDARY

"CONSTRUCTION RECORD DRAWINGS_8-01-2009

STATE OF TEXAS
DENNIS D. SATRE
71590
REGISTERED PROFESSIONAL ENGINEER
12/28/06

NO.	DATE	REVISION	APPROV.

DALLAS PARKWAY EXTENSION

COLLIN COUNTY

ROADWAY DRAINAGE AREA MAP

3 OF 3

Halff Associates, Inc.
ENGINEERS · ARCHITECTS · SCIENTISTS · PLANNERS · SURVEYORS

DRAWN MDB DATE DEC 2006 | DESIGNED DDS DATE
CHECKED DDS DATE | SCALE

BOND PROJECT NO. 03-13 SHEET 163 OF 271

P-200612-01

9:14:40 AM
i:\23000s\23819\frisco\dgn\23819sdmap05.dgn
12/28/2006 9:14:40 AM

INLET RUNOFF COMPUTATIONS

Drainage Area		Subareas										Gutter Flow		Gutter Slope			Gutter Capacity (cfs)		Selected Inlet				
No.	Acres	Frontage (acres)	Frontage CA see note 1.	Roadway (acres)	Roadway CA (C=0.7)	Total CA	Time of Conc. (min)	Intensity I_{10} (in/hr)	Discharge Q_{10} (cfs)	Station	Carry-Over From Upstream Inlet (cfs)	South Flow (cfs)	North Flow (cfs)	South Flow (ft/100 ft)	North Flow (ft/100 ft)	Ponded Width (lanes)	South Flow (cfs)	North Flow (cfs)	Length "LI" (ft)	Capacity (cfs)	Type	Carry-Over To Downstream Inlet (cfs)
A1	1.32	0.63	0.47	0.69	0.48	0.96	10	6.42	6.14	1640+04.19	0.00	2.4	3.8	-0.6	0.6	1.5	7.5	7.5	10	16	Low Point	
A2	2.76	1.40	1.05	1.36	0.95	2.00	10	6.42	12.86	1644+50.00	0.00	5.4	7.5	-0.6	0.6	1.5	7.5	7.5	10	16	Low Point	
B1	0.54	0.13	0.10	0.41	0.29	0.38	10	6.42	2.47	1642+35.00	0.00	1.8	0.7	-1	1	1.5	7.5	7.5	10	16	Low Point	
B2	1.41	0.34	0.26	1.07	0.75	1.00	10	6.42	6.45	1648+00.00	0.00	6.4					7.5		NA	NA	NA	end of pvmt.
C1	1.32	0.80	0.60	0.52	0.36	0.96	10	6.42	6.18	1651+50.00	0.00	6.2		-0.6		1.5	7.5		10	6.25	On Grade	
C2	1.69	1.03	0.77	0.67	0.47	1.23	10	6.42	7.93	1653+80.00	0.00	4.1	3.9	-0.6	0.6	1.5	7.5	7.5	10	16	Low Point	
C3	1.13	0.69	0.52	0.44	0.31	0.83	10	6.42	5.30	1659+00.00	0.00	5.3		-0.6		1.5	7.5		10	6.25	On Grade	
C4	1.70	1.03	0.77	0.67	0.47	1.24	10	6.42	7.97	1660+80.00	0.00	3.2	4.8	-0.6	0.6	1.5	7.5	7.5	10	16	Low Point	
C5	1.03	0.51	0.38	0.52	0.36	0.74	10	6.42	4.77	1665+70.00	0.00	4.8		-0.6		1.5	7.5		10	6.25	On Grade	
C6	1.78	0.87	0.65	0.91	0.64	1.29	10	6.42	8.28	1667+90.00	0.00	4.8	3.5	-0.6	0.6	1.5	7.5	7.5	10	16	Low Point	
C7	0.95	0.46	0.35	0.49	0.34	0.69	10	6.42	4.43	1669+50.00	0.00		4.4		0.6	1.5	7.5		10	6.25	On Grade	
C8	1.45	0.69	0.52	0.76	0.53	1.05	10	6.42	6.74	1674+50.00	0.00	6.7		-0.6		1.5	7.5		10	6.25	On Grade	0.49
C9	1.95	0.92	0.69	1.03	0.72	1.41	10	6.42	9.07	1676+20.00	0.49	4.3	5.2	-0.6	0.6	1.5	7.5	7.5	10	16	Low Point	
C10	1.60	0.73	0.55	0.87	0.61	1.16	10	6.42	7.43	1681+70.00	0.00	7.4		-0.6		1.5	7.5		12	7.8	On Grade	
C11	2.59	1.57	1.18	1.02	0.71	1.89	10	6.42	12.13	1685+50.00	0.00	6.9	5.2	-0.6	0.6	1.5	7.5	7.5	10	16	Low Point	
C12	1.26	0.77	0.57	0.49	0.35	0.92	10	6.42	5.91	1691+01.25	0.00	4.4	1.5	-0.6	1	1.5	7.5	10.0	10	16	Low Point	
D1	0.99	0.61	0.46	0.38	0.27	0.73	10	6.42	4.66	1692+68.75	0.00	1.5	3.2	-1	0.6	1.5	10.0	7.5	10	16	Low Point	
D2	1.14	0.69	0.52	0.45	0.31	0.83	10	6.42	5.33	1694+50.00	0.00		5.3		0.6	1.5		7.5	10	6.25	On Grade	
E1	1.52	0.92	0.69	0.60	0.42	1.11	10	6.42	7.11	1701+50.00	0.00	7.1		-0.6		1.5	7.5		10	6.25	On Grade	0.86
E2	2.09	1.26	0.95	0.83	0.58	1.53	10	6.42	9.81	1703+50.00	0.86	5.2	5.4	-0.6	0.6	1.5	7.5	7.5	10	16	Low Point	
F1	0.94	0.57	0.43	0.37	0.26	0.69	10	6.42	4.43	1709+50.00	0.00	4.4		-0.6		1.5	7.5		10	6.25	On Grade	
F2	1.33	0.80	0.60	0.52	0.37	0.97	10	6.42	6.22	1711+10.00	0.00	3.3	3.0	-0.6	0.6	1.5	7.5	7.5	10	16	Low Point	
F3	2.44	1.48	1.11	0.96	0.67	1.78	10	6.42	11.44	1716+00.00	0.00	5.3	6.1	-0.6	0.6	1.5	7.5	7.5	10	16	Low Point	
F4	1.34	0.64	0.48	0.70	0.49	0.97	10	6.42	6.23	1721+00.00	0.00	2.1	4.1	-0.6	0.6	1.5	7.5	7.5	10	16	Low Point	
F5	1.65	0.68	0.51	0.97	0.68	1.19	10	6.42	7.63	1726+00.00	0.00	1.7	5.9	-0.6	0.6	1.5	7.5	7.5	10	16	Low Point	
G1	1.27	0.52	0.39	0.75	0.52	0.91	10	6.42	5.86	1736+00.00	0.00	5.9		-0.6		1.5	7.5		10	6.25	On Grade	
G2	1.01	0.41	0.31	0.60	0.42	0.73	10	6.42	4.67	1740+00.00	0.00	4.7		-0.6		1.5	7.5		10	6.25	On Grade	
G3	1.50	0.87	0.65	0.63	0.44	1.09	10	6.42	7.03	1742+05.00	0.00	3.3	3.8	-0.6	1	1.5	7.5	10.0	10	16	Low Point	
H1	1.91	1.17	0.88	0.73	0.51	1.39	10	6.42	8.94	1746+74.98	0.69	4.1	5.5	-1	0.6	1.5	10.0	7.5	10	16	Low Point	
H2	1.33	0.80	0.60	0.52	0.37	0.97	10	6.42	6.22	1749+50.00	0.73		6.9		0.6	1.5		7.5	10	6.25	On Grade	0.69
H3	1.36	0.82	0.62	0.54	0.38	0.99	10	6.42	6.38	1753+00.00	0.59		7.0		0.6	1.5		7.5	10	6.25	On Grade	0.73
H4	1.40	0.85	0.64	0.55	0.38	1.02	10	6.42	6.56	1756+60.00	0.28		6.8		0.6	1.5		7.5	10	6.25	On Grade	0.59
H5	1.39	0.85	0.64	0.55	0.38	1.02	10	6.42	6.53	1760+30.00	0.00		6.5		0.6	1.5		7.5	10	6.25	On Grade	0.28
H6	1.14	0.69	0.52	0.45	0.31	0.83	10	6.42	5.32	1767+00.00	0.00	5.3		-0.5		1.5	6.8		10	6.4	On Grade	
H7	1.41	0.69	0.52	0.72	0.51	1.02	10	6.42	6.58	1770+00.00	0.00	6.6		-0.5		1.5	6.8		10	6.4	On Grade	0.18
H8	1.41	0.69	0.52	0.72	0.50	1.02	10	6.42	6.56	1773+00.00	0.18	6.7		-0.5		1.5	6.8		10	6.4	On Grade	0.34
H9	1.41	0.69	0.52	0.72	0.50	1.02	10	6.42	6.56	1776+00.00	0.34	6.9		-0.5		1.5	6.8		10	6.4	On Grade	0.49
H10	1.33	0.81	0.61	0.52	0.36	0.97	10	6.42	6.24	1777+50.00	0.49	2.8	3.9	-0.5	0.5	1.5	6.8	6.8	10	16	Low Point	
H11	1.33	0.81	0.61	0.52	0.36	0.97	10	6.42	6.24	1783+00.00	0.00	6.2		-0.6		1.5	7.5		10	6.25	On Grade	
H12	1.52	0.92	0.69	0.60	0.42	1.11	10	6.42	7.12	1784+80.00	0.00	3.2	3.9	-0.6	0.6	1.5	7.5	7.5	10	16	Low Point	
H13	2.09	1.26	0.95	0.82	0.58	1.52	10	6.42	9.78	1790+30.00	0.00	5.9	3.9	-0.6	0.6	1.5	7.5	7.5	10	16	Low Point	
H14	1.80	1.09	0.82	0.70	0.49	1.31	10	6.42	8.42	1795+87.13	0.00	6.4	2.0	-0.6	1.016	1.5	7.5	10.0	10	16	Low Point	
I1	1.40	0.77	0.69	0.63	0.44	1.13	10	6.42	7.28	1801+50.00	0.00	7.3		-0.6			7.5		12	7.8	On Grade	
I2	1.81	0.84	0.76	0.97	0.68	1.44	10	6.42	9.21	1803+05.45	0.00	2.8	6.4	-0.6	0.5		7.5	6.8	10	16	Low Point	
I3	1.23	0.64	0.58	0.59	0.41	0.99	10	6.42	6.35	1809+61.37	0.00	3.3	3.0	-1	0.737	1.5	10.0	8.5	10	16	Low Point	
I4	1.30	0.71	0.64	0.59	0.41	1.05	10	6.42	6.75	1811+50.00	0.00		6.8		0.737	1.5		8.5	12	7.8	On Grade	
I5	1.40	0.77	0.69	0.63	0.44	1.13	10	6.42	7.28	1815+50.00	0.00		7.3		0.737	1.5		8.5	12	7.8	On Grade	
I6	1.58	0.52	0.47	1.06	0.74	1.21	10	6.42	7.77	1819+70.00	0.00		7.8		0.737	1.5		8.5	12	7.8	On Grade	
I7	1.32	0.64	0.58	0.68	0.48	1.05	10	6.42	6.75	1824+40.00	0.00		6.8		0.737	1.5		8.5	12	7.8	On Grade	

OFFSITE RUNOFF COMPUTATIONS

Drainage Area					
No.	Acres	Offsite CA see note 2.	Time of Conc. (min)	Intensity I_{100} (in/hr)	Discharge Q_{100} (cfs)
A2-1	7.51	2.25	10	8.82	19.9
C2-1	19.10	5.73	10	8.82	50.5
C4-1	18.18	5.45	10	8.82	48.1
C6-1	11.54	3.46	10	8.82	30.5
C9-1	3.07	0.92	10	8.82	8.1
C11-1	7.51	2.25	10	8.82	19.9
D2-1	2.96	0.89	10	8.82	7.8
E2-1	15.43	4.63	10	8.82	40.8
F6	61.80	18.54	15	7.62	141.3
G4	12.00	9.00	12	8.25	74.3
H4-1	1.84	0.55	10	8.82	4.9
H9-1	14.87	4.46	12	8.25	36.8
H10-1	24.90	7.47	15	7.62	56.9
H11-1	96.00	28.80	23.5	6.38	183.7
H12-1	6.36	1.91	10	8.82	16.8
H13-1	7.72	2.32	10	8.82	20.4
I2-1	6.94	6.25	10	8.82	55.1

NOTES:
1. C-VALUE = 0.75 SOUTH OF CR 5
   C-VALUE = 0.90 NORTH OF CR 5
2. C-VALUE = 0.3 SOUTH OF CR 5
   C-VALUE = 0.9 NORTH OF CR 5
   C-CALUE = 0.75 WITHIN DNT ROW

"CONSTRUCTION RECORD DRAWINGS_8-01-2009

STATE OF TEXAS
DENNIS D. SATRE
71590
REGISTERED PROFESSIONAL ENGINEER
12/28/06

NO.	DATE	REVISION	APPROV.

DALLAS PARKWAY EXTENSION

COLLIN COUNTY

INLET & OFFSITE RUNOFF COMPUTATIONS

1 OF 2

Halff Associates, Inc.
ENGINEERS · ARCHITECTS · SCIENTISTS · PLANNERS · SURVEYORS

DRAWN MDB DATE DEC 2006 | DESIGNED DDS DATE
CHECKED DDS DATE | SCALE

BOND PROJECT NO. 03-13 SHEET 164 OF 271

P-20061201

INLET RUNOFF COMPUTATIONS

Drainage Area		Subareas										Gutter Flow		Gutter Slope			Gutter Capacity (cfs)		Selected Inlet				
No.	Acres	Frontage (acres)	Frontage CA see note 1.	Roadway (acres)	Roadway CA (C=0.7)	Total CA	Time of Conc. (min)	Intensity I_{10} (in/hr)	Discharge Q_{10} (cfs)	Station	Carry-Over From Upstream Inlet (cfs)	South Flow (cfs)	North Flow (cfs)	South Flow (ft/100 ft)	North Flow (ft/100 ft)	Ponded Width (lanes)	South Flow (cfs)	North Flow (cfs)	Length "LI" (ft)	Capacity (cfs)	Type	Carry-Over To Downstream Inlet (cfs)
I8	2.71	1.09	0.98	1.62	1.13	2.12	10	6.42	13.58	1832+98.53	0.00	7.6	5.9	-0.65	0.68	1.5	7.8	7.8	10	16	Low Point	
I9	1.14	0.54	0.49	0.60	0.42	0.91	10	6.42	5.82	1836+10.00	0.00		5.8		0.68	1.5		7.8	10	6.2	On Grade	
I10	1.11	0.60	0.54	0.51	0.36	0.90	10	6.42	5.76	1839+20.00	0.00		5.8		0.68	1.5		7.8	10	6.2	On Grade	
I11	1.00	0.55	0.50	0.45	0.32	0.81	10	6.42	5.20	1842+50.00	0.00		5.2		0.68	1.5		7.5	10	6.2	On Grade	
I12	0.93	0.51	0.46	0.42	0.29	0.75	10	6.42	4.83	1845+50.00	0.00		4.8		2.643	1.5		16.0	10	5.3	On Grade	
I13	0.97	0.54	0.49	0.43	0.30	0.79	10	6.42	5.05	1848+30.00	0.00		5.1		2.643	1.5		16.0	10	5.3	On Grade	
J1	0.95	0.34	0.31	0.61	0.43	0.73	10	6.42	4.71	1855+30.00	0.00	4.7		-4.056		1.5	19.0		10	5	On Grade	
J2	1.01	0.00	0.00	1.01	0.71	0.71	10	6.42	4.54	1859+51.12	0.00	3.7	0.8	-4.056	1	1.5	19.0	10.0	10	16	Low Point	
J3	1.26	0.00	0.00	1.26	0.88	0.88	10	6.42	5.67	1870+41.94	0.00	2.7	3.0	-2.5	0.6	1.5	15.0	7.5	10	16	Low Point	
J4	1.87	0.89	0.80	0.98	0.69	1.49	10	6.42	9.55	1878+30.00	0.00	5.4	4.2	-0.6	0.6	1.5	7.5	7.5	10	16	Low Point	
J5	2.01	1.11	1.00	0.90	0.63	1.63	10	6.42	10.46	1883+50.00	0.00	4.0	6.5	-0.6	0.6	1.5	7.5	7.5	10	16	Low Point	
J6	1.23	0.68	0.61	0.55	0.39	1.00	10	6.42	6.40	1889+35.00	0.00	3.6	2.8	-0.6	0.6	1.5	7.5	7.5	10	16	Low Point	
J7	0.74	0.41	0.37	0.33	0.23	0.60	10	6.42	3.85	1891+00.00	0.00		3.9		0.6			7.5	10	6.25	On Grade	
J8	1.44	0.79	0.71	0.65	0.46	1.17	10	6.42	7.49	1895+45.00	0.00	3.9	3.6	-0.65	0.68	1.5	7.8	7.8	10	16	Low Point	
J9	1.05	0.58	0.52	0.47	0.33	0.85	10	6.42	5.46	1897+50.00	0.00		5.5		0.68	1.5		7.8	10	6.2	On Grade	
J10	1.05	0.58	0.52	0.47	0.33	0.85	10	6.42	5.46	1900+65.00	0.00		5.5		0.68	1.5		7.8	10	6.2	On Grade	
J11	1.09	0.59	0.53	0.50	0.35	0.88	10	6.42	5.66	1903+80.00	0.00		5.7		0.68	1.5		7.5	10	6.2	On Grade	
K1	1.64	0.91	0.82	0.73	0.51	1.33	10	6.42	8.54	1909+24.99	0.05	3.3	5.3	-1	0.6	1.5	10.0	7.5	10	16	Low Point	
K2	1.21	0.67	0.60	0.54	0.38	0.98	10	6.42	6.30	1912+00.00	0.00		6.3		0.6	1.5		7.5	10	6.25	On Grade	0.05
K3	1.20	0.66	0.59	0.54	0.38	0.97	10	6.42	6.24	1915+60.00	0.00		6.2		0.6	1.5		7.5	10	6.25	On Grade	
L1	0.93	0.52	0.47	0.41	0.29	0.76	10	6.42	4.85	1925+50.00	0.00		4.8		2	1.5		14.0	10	5.4	On Grade	
L2	0.91	0.50	0.45	0.41	0.29	0.74	10	6.42	4.73	1928+30.00	0.00		4.7		2	1.5		14.0	10	5.4	On Grade	
M1	0.87	0.49	0.44	0.38	0.27	0.71	10	6.42	4.54	1933+70.00	0.00	4.5		-1.68		1.5	13.0		10	5.6	On Grade	
M2	0.89	0.50	0.45	0.39	0.27	0.72	10	6.42	4.64	1936+40.00	0.00	4.6		-1.68		1.5	13.0		10	5.6	On Grade	
M3	1.53	0.84	0.76	0.69	0.48	1.24	10	6.42	7.95	1938+00.00	0.00	2.7	5.2	-0.6	0.6	1.5	7.5	7.5	10	16	Low Point	
M4	1.73	0.85	0.77	0.88	0.62	1.38	10	6.42	8.87	1944+00.00	0.00	5.3	3.6	-0.6	1.085	1.5	7.5	10.0	10	16	Low Point	
M5	1.02	0.44	0.40	0.58	0.41	0.80	10	6.42	5.15	1945+60.00	0.00		5.1		1.085	1.5		10.0	10	5.8	On Grade	
M6	1.17	0.50	0.45	0.67	0.47	0.92	10	6.42	5.90	1948+00.00	0.00		5.9		2.4	1.5		15.0	12	6.6	On Grade	
M7	1.26	0.52	0.47	0.74	0.52	0.99	10	6.42	6.33	1950+70.00	0.16		6.5		2.4	1.5		15.0	12	6.6	On Grade	
M8	1.27	0.82	0.74	0.45	0.32	1.05	10	6.42	6.76	1953+50.00	0.00		6.8		2.4	1.5		15.0	12	6.6	On Grade	0.16
N1	1.81	0.96	0.86	0.85	0.60	1.46	10	6.42	9.37	1961+50.00	0.00	9.4		-4		1.5	19.0		12	6.2	On Grade	3.17
N2	0.55	0.33	0.30	0.22	0.15	0.45	10	6.42	2.90	1963+00.00	3.17	6.1		-1.5		1.5	12.0	10.0	12	7	On Grade	
N3	0.71	0.31	0.28	0.40	0.28	0.56	10	6.42	3.59	1963+93.00	0.00	2.7	1.0	-1	1	1.5	10.0	13.0	10	16	Low Point	

OFFSITE RUNOFF COMPUTATIONS

Drainage Area					
No.	Acres	Offsite CA see note 2.	Time of Conc. (min)	Intensity I_{100} (in/hr)	Discharge Q_{100} (cfs)
I10-1	0.59	0.53	10	8.82	4.7
I11-1	1.30	1.17	10	8.82	10.3
I12-1	1.32	1.19	10	8.82	10.5
I13-1	0.56	0.50	10	8.82	4.4
J3-1	31.49	28.34	15	7.62	216.0
J4-1	0.35	0.32	10	8.82	2.8
J5-1	3.47	3.12	10	8.82	27.5
J6-1	38.62	34.76	15	7.62	264.9
J8-1	6.87	6.18	10	8.82	54.5
K2-1	4.18	3.76	10	8.82	33.2
K6	23.00	17.25	15	7.62	131.4
L3	11.51	10.36	15	7.62	78.9
M1-1	1.12	1.01	10	8.82	8.9
M2-1	0.79	0.71	10	8.82	6.3
M5-1	0.54	0.49	10	8.82	4.3
M6-1	0.95	0.86	10	8.82	7.5
M7-1	1.41	1.27	10	8.82	11.2
M8-1	1.83	1.65	10	8.82	14.5
N1-1	0.91	0.82	10	8.82	7.2

NOTES:
1. C-VALUE = 0.75 SOUTH OF CR 5
   C-VALUE = 0.90 NORTH OF CR 5
2. C-VALUE = 0.3 SOUTH OF CR 5
   C-VALUE = 0.9 NORTH OF CR 5
   C-CALUE = 0.75 WITHIN DNT ROW

STATE OF TEXAS
DENNIS D. SATRE
71590
REGISTERED PROFESSIONAL ENGINEER
12/28/06

"CONSTRUCTION RECORD DRAWINGS_8-01-2009

NO.	DATE	REVISION	APPROV.

DALLAS PARKWAY EXTENSION

COLLIN COUNTY

INLET & OFFSITE RUNOFF COMPUTATIONS

2 OF 2

Halff Associates, Inc.
ENGINEERS · ARCHITECTS · SCIENTISTS · PLANNERS · SURVEYORS

DRAWN MDB DATE DEC 2006 | DESIGNED DDS DATE
CHECKED DDS DATE | SCALE

BOND PROJECT NO. 03-13 SHEET 165 OF 271

R-200612.01

12/28/2006 9:14:42 AM

9:14:42 AM
i:\23000s\23819\frisco\dgn\23819sddot01b.dgn

NAME (LINE AND LATERAL)	RUNOFF COLLECTION POINT (INLET OR MANHOLE)		DISTANCE BETWEEN COLLECTION POINTS	CUMULATIVE DRAINAGE AREA	INCREMENTAL DRAINAGE AREA		TOTAL "CA"	TIME OF CONCENTRATION (MINUTES)	DESIGN STORM FREQUENCY (YEARS)	INTENSITY "I" (IN/HR)	STORM WATER RUNOFF "Q" (CFS)	SELECTED STORM SEWER SIZE (Area)			SLOPE OF HYDRAULIC GRADIENT "S" (FT/FT)	VELOCITY IN SEWER BETWEEN COLLECTION POINTS "V" (FPS)	VELOCITY HEAD $V_2^2/2g$ (FT)	FLOW TIME IN SEWER (L/V*60) (MINUTES)	TIME AT DOWNSTREAM STATION (MINUTES)
	UPSTREAM STATION	DOWNSTREAM STATION			AREA	"CA"						# of Barrels	Diameter (in) or Box Size (ft x ft)						
LINE A1	90	0	90		A1	0.96	0.96	10.00	100	8.82	8.47	1	21		0.00286	3.52	0.19	0.43	10.43
LAT A2	25	0	25		A2	2.00	2.00	10.00	100	8.82	17.64	1	21		0.01239	7.33	0.84	0.06	10.06
LINE A2-1	96	65	31		A2-1	2.25	2.25	10.00	100	8.82	19.85	1	27		0.00411	4.99	0.39	0.10	10.10
	65	0	65	A2 + A2-1	A2	2.00	4.25	10.10	100	8.82	37.49	1	30		0.00835	7.64	0.91	0.14	10.25
LINE B1	21	0	21		B1	0.38	0.38	10.00	100	8.82	3.35	1	21		0.00045	1.39	0.03	0.25	10.25
LINE C1	165150	165397	247		C1	0.96	0.96	10.00	100	8.82	8.47	1	21		0.00286	3.52	0.19	1.17	11.17
LAT C2	37	0	37		C2	1.23	1.23	10.00	100	8.82	10.85	1	21		0.00469	4.51	0.32	0.14	10.14
LINE C2	165397	165410	13	C1 + C2	C2	1.23	2.19	11.17	100	8.50	18.62	1	24		0.00677	5.93	0.55	0.04	11.21
LAT C2-1	37	0	37		C2-1	5.73	5.73	10.00	100	8.82	50.54	1	4	2	0.00524	6.32	0.62	0.10	10.10
LINE C2-1	165410	165928	518	C1 + C2 + C2-1	C2-1	5.73	7.92	11.21	100	8.50	67.32	1	4	3	0.00296	5.61	0.49	1.54	12.74
LAT C3	72	0	72		C3	0.83	0.83	10.00	100	8.82	7.32	1	18		0.00486	4.14	0.27	0.29	10.29
LINE C3	165928	166110	182	C1 + C2 + C2-1 + C3	C3	0.83	8.75	12.74	100	8.15	71.31	1	6	3	0.00120	3.96	0.24	0.77	13.51
LAT C4	20	0	20		C4	1.24	1.24	10.00	100	8.82	10.94	1	21		0.00476	4.55	0.32	0.07	10.07
LAT C4-1	80	70	10		C4-1	5.45	5.45	10.00	100	8.82	48.07	1	4	2	0.00474	6.01	0.56	0.03	10.03
	70	0	70	C4 + C4-1	C4	1.24	6.69	10.03	100	8.82	59.01	1	4	2	0.00715	7.38	0.84	0.16	10.19
LINE C4	166110	166140	30	C1 + C2 + C2-1 + C3 + C4 + C4-1	C4 + C4-1	6.69	15.44	13.51	100	7.95	122.75	1	6	3	0.00356	6.82	0.72	0.07	13.58
LINE C5	90	0	90		C5	0.74	0.74	10.00	100	8.82	6.53	1	18		0.00386	3.69	0.21	0.41	10.41
LAT C6	17	0	17		C6	1.29	1.29	10.00	100	8.82	11.38	1	21		0.00516	4.73	0.35	0.06	10.06
LINE C6-1	95	90	5		C6-1	3.46	3.46	10.00	100	8.82	30.52	1	36		0.00209	4.32	0.29	0.02	10.02
	90	0	90	C6 + C6-1	C6	1.29	4.75	10.02	100	8.82	41.90	1	36		0.00395	5.93	0.55	0.25	10.27
LINE C7	90	0	90		C7	0.69	0.69	10.00	100	8.82	6.09	1	18		0.00336	3.44	0.18	0.44	10.44
LINE C8	90	0	90		C8	1.05	1.05	10.00	100	8.82	9.26	1	18		0.00777	5.24	0.43	0.29	10.29
LINE C9	98	90	8		C9-1	0.92	0.92	10.00	100	8.82	8.11	1	27		0.00069	2.04	0.06	0.07	10.07
	90	0	90	C9 + C9-1	C9	1.41	2.33	10.07	100	8.82	20.55	1	27		0.00440	5.17	0.41	0.29	10.36
LINE C10	90	0	90		C10	1.16	1.16	10.00	100	8.82	10.23	1	18		0.00949	5.79	0.52	0.26	10.26
LAT C11	41	0	41		C11	1.89	1.89	10.00	100	8.82	16.67	1	21		0.01107	6.93	0.75	0.10	10.10
LINE C11-1	98	66	32		C11-1	2.25	2.25	10.00	100	8.82	19.85	1	30		0.00234	4.04	0.25	0.13	10.13
	66	0	66	C11 + C11-1	C11	1.89	4.14	10.13	100	8.82	36.51	1	30		0.00793	7.44	0.86	0.15	10.28
LAT C12	169101	169153	52		C12	0.92	0.92	10.00	100	8.82	8.11	1	21		0.00262	3.37	0.18	0.26	10.26
	104	0	104	C12 + TEMP	TEMP	3.00	3.92	10.26	100	8.82	34.57	1	30		0.00711	7.04	0.77	0.25	10.50
LINE D2-1	225	221	4		D2-1	0.89	0.89	10.00	100	8.82	7.85	1	24		0.00120	2.50	0.10	0.03	10.03
LINE D2	221	48	173	D2 + D2-1	D2	0.73	1.62	10.03	100	8.82	14.29	1	24		0.00399	4.55	0.32	0.63	10.66
LINE D1	48	0	48	D1 + D2 + D2-1	D1	0.83	2.45	10.66	100	8.70	21.32	1	30		0.00270	4.34	0.29	0.18	10.84
LAT E1	146	0	146		E1	1.11	1.11	10.00	100	8.82	9.79	1	21		0.00382	4.07	0.26	0.60	10.60
LAT E2	51	0	51		E2	1.53	1.53	10.00	100	8.82	13.49	1	21		0.00725	5.61	0.49	0.15	10.15
LINE E2-1	68	48	20		E2-1	4.63	4.63	10.00	100	8.82	40.84	1	4	2	0.00342	5.10	0.40	0.07	10.07
	48	0	48	E2-1 + E1 + E2	E1 + E2	2.64	7.27	10.60	100	8.70	63.25	1	4	2	0.00821	7.91	0.97	0.10	10.70
LINE F1	170950	171115	165		F1	0.69	0.69	10.00	100	8.82	6.09	1	18		0.00336	3.44	0.18	0.80	10.80
LAT F2	10	0	10		F2	0.97	0.97	10.00	100	8.82	8.56	1	21		0.00292	3.56	0.20	0.05	10.05
LINE F2	171115	171235	120	F1 + F2	F2	0.97	1.66	10.80	100	8.70	14.44	1	24		0.00408	4.60	0.33	0.44	11.23
LINE F3	90	0	90		F3	1.38	1.38	10.00	100	8.82	12.17	1	21		0.00590	5.06	0.40	0.30	10.30
LINE F4	90	0	90		F4	1.64	1.64	10.00	100	8.82	14.46	1	21		0.00833	6.01	0.56	0.25	10.25
LINE F5	90	0	90		F5	0.91	0.91	10.00	100	8.82	8.03	1	18		0.00584	4.54	0.32	0.33	10.33
LINE F6	86	0	86		F6	18.54	18.54	15.00	100	7.62	141.27	1	6	3	0.00471	7.85	0.96	0.18	15.18

"CONSTRUCTION RECORD DRAWINGS_8-01-2009

STATE OF TEXAS
DENNIS D. SATRE
71590
REGISTERED PROFESSIONAL ENGINEER
12/28/06

NO.	DATE	REVISION	APPROV.

DALLAS PARKWAY EXTENSION

COLLIN COUNTY

STORM DRAIN COMPUTATIONS

1 OF 3

Halff Associates, Inc.
ENGINEERS · ARCHITECTS · SCIENTISTS · PLANNERS · SURVEYORS

DRAWN MDB DATE DEC 2006 | DESIGNED DDS DATE
CHECKED DDS DATE | SCALE

BOND PROJECT NO. 03-13 SHEET 166 OF 271

R-200612.01

NAME (LINE AND LATERAL)	RUNOFF COLLECTION POINT (INLET OR MANHOLE)		DISTANCE BETWEEN COLLECTION POINTS	CUMULATIVE DRAINAGE AREA	INCREMENTAL DRAINAGE AREA		TOTAL "CA"	TIME OF CONCENTRATION (MINUTES)	DESIGN STORM FREQUENCY (YEARS)	INTENSITY "I" (IN/HR)	STORM WATER RUNOFF "Q" (CFS)	SELECTED STORM SEWER SIZE (Area)			SLOPE OF HYDRAULIC GRADIENT "S" (FT/FT)	VELOCITY IN SEWER BETWEEN COLLECTION POINTS "V" (FPS)	VELOCITY HEAD $V_2^2/2g$ (FT)	FLOW TIME IN SEWER (L/V*60) (MINUTES)	TIME AT DOWNSTREAM STATION (MINUTES)
	UPSTREAM STATION	DOWNSTREAM STATION			AREA	"CA"						# of Barrels	Diameter (in) or Box Size (ft x ft)						
LINE G1	90	0	90		G1	0.91	0.91	10.00	100	8.82	8.03	1	18		0.00157	4.53	0.32	0.06	15.06
LINE G2	90	0	90		G2	0.73	0.73	10.00	100	8.82	6.44	1	18		0.00200	5.12	0.41	0.25	0.00
LINE G3	102	0	102		G3	1.09	1.09	10.00	100	8.82	9.61	1	21		0.00292	3.56	0.20	0.10	10.10
LINE G4	109	0	109	G1 + G2 + G3 + G4	G4	9	11.73	12.00	100	8.25	96.77	1	48		0.00352	7.66	0.91	0.03	23.53
LINE H1	28	0	28		H1	1.39	1.39	10.00	100	8.82	12.26	1	21		0.00376	7.91	0.97	0.15	23.68
LINE H2	90	0	90		H2	0.97	0.97	10.00	100	8.82	8.56	1	18		0.00169	3.43	0.18	0.09	10.09
LINE H3	90	0	90		H3	0.99	0.99	10.00	100	8.82	8.73	1	18		0.00422	5.43	0.46	0.23	10.32
LAT H4	26	0	26		H4	1.02	1.02	10.00	100	8.82	9.00	1	18		0.00437	5.15	0.41	0.01	10.01
LINE H4-1	96	64	32		H4-1	0.55	0.55	10.00	100	8.82	4.85	1	24		0.01196	8.52	1.13	0.18	10.19
	64	0	64	H4 + H4-1	H4	1.02	1.57	10.35	100	8.82	13.85	1	24		0.00532	4.80	0.36	0.31	10.31
LINE H5	90	0	90		H5	1.02	1.02	10.00	100	8.82	9.00	1	18		0.00396	4.14	0.27	0.64	10.64
LINE H6	90	0	90		H6	0.83	0.83	10.00	100	8.82	7.32	1	24		0.00315	4.04	0.25	0.04	10.04
LINE H7	90	0	90		H7	1.02	1.02	10.00	100	8.82	9.00	1	24		0.00297	4.55	0.32	0.29	10.94
LINE H8	90	0	90		H8	1.02	1.02	10.00	100	8.82	9.00	1	24		0.00683	7.60	0.94	0.20	10.20
LAT H9	9	0	9		H9	1.02	1.02	10.00	100	8.82	9.00	1	18		0.00304	3.63	0.20	0.40	10.40
LINE H9-1	98	91	7		H9-1	4.46	4.46	12.00	100	8.25	36.80	1	42		0.00304	3.63	0.20	0.40	10.40
	91	0	91	H9 + H9-1	H9	1.02	5.48	12.03	100	8.25	45.21	1	42		0.00777	5.24	0.43	0.28	10.28
LAT H10	13	0	13		H10	0.97	0.97	10.00	100	8.82	8.56	1	21		0.01032	6.04	0.57	0.25	10.25
LINE H10-1	93	76	17		H10-1	7.47	7.47	15.00	100	7.62	56.92	1	48		0.00900	5.64	0.49	0.27	10.27
	76	0	76	H10 + H10-1	H10	0.97	8.44	15.06	100	7.62	64.31	1	48		0.01032	6.04	0.57	0.25	10.25
LAT H11	21	0	21		H11	0.97	0.97	10.00	100	8.82	8.56	1	21		0.00777	5.24	0.43	0.28	10.28
LINE H11-1	84	72	12		H11-1	28.8	28.8	23.50	100	6.38	183.74	1	6	4	0.00683	5.95	0.55	0.25	10.25
	72	0	72	H11 + H11-1	H11	0.97	29.77	23.53	100	6.38	189.93	1	6	4	0.00584	4.54	0.32	0.33	10.33
LAT H12	14	0	14		H12	1.11	1.11	10.00	100	8.82	9.79	1	21		0.00087	1.94	0.06	0.03	10.03
LINE H12-1	93	75	18		H12-1	1.91	1.91	10.00	100	8.82	16.85	1	30		0.00087	1.94	0.06	0.03	10.03
	75	0	75	H12 + H12-1	H12	1.11	3.02	10.09	100	8.82	26.64	1	30		0.00634	5.24	0.43	0.29	10.32
LINE H13-1	94	90	4		H13-1	2.32	2.32	10.00	100	8.82	20.46	1	27		0.00437	5.15	0.41	0.01	10.01
LINE H13	90	0	90	H13 + H13-1	H13	1.52	3.84	10.01	100	8.82	33.87	1	27		0.01196	8.52	1.13	0.18	10.19
LINE H14	90	0	90		H14	1.31	1.31	10.00	100	8.82	11.55	1	21		0.00419	5.41	0.45	0.26	12.26
LINE I1	180150	180310	160		I1	1.13	1.13	10.00	100	8.82	9.97	1	21		0.00439	4.36	0.30	0.01	10.01
LINE I2	90	80	10		I2	1.44	1.44	10.00	100	8.82	12.70	1	24		0.00572	5.45	0.46	0.27	10.28
	80	0	80	I1 + I2	I1	1.13	2.57	10.64	100	8.7	22.36	1	30		0.00077	1.83	0.05	0.04	10.04
LINE I2-1	92	0	92		I2-1	6.25	6.25	10.00	100	8.82	55.13	1	36		0.00516	4.73	0.35	0.27	10.31
LINE I3	88	0	88		I3	0.99	0.99	10.00	100	8.82	8.73	1	21		0.00376	3.64	0.21	0.50	10.50
LINE I4	88	0	88		I4	1.05	1.05	10.00	100	8.82	9.26	1	18		0.00355	3.54	0.19	0.64	10.64
LINE I5	90	0	90		I5	1.13	1.13	10.00	100	8.82	9.97	1	18		0.00688	11.00	1.88	0.20	15.20
LINE I6	90	0	90		I6	1.21	1.21	10.00	100	8.82	10.67	1	18		0.00240	3.23	0.16	0.46	10.46
LINE I7	89	0	89		I7	1.05	1.05	10.00	100	8.82	9.26	1	18		0.00688	5.46	0.46	0.07	10.07
LINE I8	90	0	90		I8	2.12	2.12	10.00	100	8.82	18.70	1	24		0.00016	0.90	0.01	0.07	10.07
LINE I9	90	0	90		I9	0.91	0.91	10.00	100	8.82	8.03	1	18		0.00249	3.59	0.20	0.45	10.52
LINE I10	94	90	4		I10-1	0.53	0.53	10.00	100	8.82	4.67	1	21		0.00823	5.98	0.55	0.09	10.09
	90	0	90	I10 + I10-1	I10	0.9	1.43	10.03	100	8.82	12.61	1	21		0.00170	3.89	0.24	0.03	10.03
LINE I11	93	89	4		I11-1	1.17	1.17	10.00	100	8.82	10.32	1	24		0.00395	5.93	0.55	0.26	10.28
	89	0	89	I11 + I11-1	I11	0.81	1.98	10.02	100	8.82	17.46	1	24		0.00310	3.67	0.21	0.41	10.41
CR50 TEMP	183240	183156	84	I8 + I9 + I10 + I11		6.44	3.22	12.00	100	8.25	26.57	1	30		0.00497	9.46	1.39	0.14	15.14
LINE I12	92	89	3		I12-1	1.19	1.19	10.00	100	8.82	10.50	1	21		0.00254	2.99	0.14	0.50	10.50
	89	0	89	I12 + I12-1	I12	0.75	1.94	10.01	100	8.82	17.11	1	24		0.00424	4.29	0.29	0.11	10.11
LINE I13	81	77	4		I13-1	0.5	0.5	10.00	100	8.82	4.41	1	21		0.00668	7.71	0.92	0.01	10.01
	77	0	77	I13 + I13-1	I13	0.79	1.29	10.04	100	8.82	11.38	1	21		0.00945	9.17	1.31	0.17	10.18

"CONSTRUCTION RECORD DRAWINGS_8-01-2009

STATE OF TEXAS
DENNIS D. SATRE
71590
REGISTERED
PROFESSIONAL ENGINEER
12/28/06

NO.	DATE	REVISION	APPROV.

DALLAS PARKWAY EXTENSION

COLLIN COUNTY

STORM DRAIN COMPUTATIONS

2 OF 3

Halff Associates, Inc.
ENGINEERS · ARCHITECTS · SCIENTISTS · PLANNERS · SURVEYORS

DRAWN MDB DATE DEC 2006 | DESIGNED DDS DATE
CHECKED DDS DATE | SCALE

BOND PROJECT NO. 03-13 SHEET 167 OF 271

R-2006-12-01

NAME (LINE AND LATERAL)	RUNOFF COLLECTION POINT (INLET OR MANHOLE)		DISTANCE BETWEEN COLLECTION POINTS	CUMULATIVE DRAINAGE AREA	INCREMENTAL DRAINAGE AREA		TOTAL "CA"	TIME OF CONCENTRATION (MINUTES)	DESIGN STORM FREQUENCY (YEARS)	INTENSITY "I" (IN/HR)	STORM WATER RUNOFF "Q" (CFS)	SELECTED STORM SEWER SIZE (Area)			SLOPE OF HYDRAULIC GRADIENT "S" (FT/FT)	VELOCITY IN SEWER BETWEEN COLLECTION POINTS "V" (FPS)	VELOCITY HEAD $V_s^2/2g$ (FT)	FLOW TIME IN SEWER (L/V*60) (MINUTES)	TIME AT DOWNSTREAM STATION (MINUTES)
	UPSTREAM STATION	DOWNSTREAM STATION			AREA	"CA"						# of Barrels	Diameter (in) or Box Size (ft x ft)						
LINE J1	109	0	109		J1	0.73	0.73	10.00	100	8.82	6.44	1	18		0.00376	3.64	0.21	0.50	10.50
LINE J2	137	0	137		J2	0.71	0.71	10.00	100	8.82	6.26	1	18		0.00355	3.54	0.19	0.64	10.64
LINE J3-1	130	0	130		J3-1	28.34	28.34	15.00	100	7.62	215.95	1	60		0.00688	11.00	1.88	0.20	15.20
LINE J3	90	0	90		J3	0.88	0.88	10.00	100	8.82	7.76	1	21		0.00240	3.23	0.16	0.46	10.46
LATERAL J4	23	0	23		J4	1.49	1.49	10.00	100	8.82	13.14	1	21		0.00688	5.46	0.46	0.07	10.07
LINE J4-1	100	96	4		J4-1	0.32	0.32	10.00	100	8.82	2.82	1	24		0.00016	0.90	0.01	0.07	10.07
	96	0	96	J4 + J4-1	J4	0.96	1.28	10.07	100	8.82	11.29	1	24		0.00249	3.59	0.20	0.45	10.52
LATERAL J5	33	0	33		J5	1.63	1.63	10.00	100	8.82	14.38	1	21		0.00823	5.98	0.55	0.09	10.09
LINE J5-1	98	92	6		J5-1	3.12	3.12	10.00	100	8.82	27.52	1	36		0.00170	3.89	0.24	0.03	10.03
	92	0	92	J5 + J5-1	J5	1.63	4.75	10.03	100	8.82	41.90	1	36		0.00395	5.93	0.55	0.26	10.28
LINE J6	90	0	90		J6	1	1	10.00	100	8.82	8.82	1	21		0.00310	3.67	0.21	0.41	10.41
LINE J6-1	82	0	82		J6-1	34.76	34.76	15.00	100	7.62	264.87	1	7	4	0.00497	9.46	1.39	0.14	15.14
LINE J7	90	0	90		J7	0.6	0.6	10.00	100	8.82	5.29	1	18		0.00254	2.99	0.14	0.50	10.50
LAT J8	29	0	29		J8	1.17	1.17	10.00	100	8.82	10.32	1	21		0.00424	4.29	0.29	0.11	10.11
LINE J8-1	99	93	6		J8-1	6.18	6.18	10.00	100	8.82	54.51	1	36		0.00668	7.71	0.92	0.01	10.01
	93	0	93	J8 + J8-1	J8	1.17	7.35	10.01	100	8.82	64.83	1	36		0.00945	9.17	1.31	0.17	10.18
LINE J9	90	0	90		J9	0.85	0.85	10.00	100	8.82	7.50	1	21		0.00224	3.12	0.15	0.48	10.48
LINE J10	90	0	90		J10	0.85	0.85	10.00	100	8.82	7.50	1	18		0.00509	4.24	0.28	0.35	10.35
LINE J11	90	0	90		J11	0.88	0.88	10.00	100	8.82	7.76	1	18		0.00546	4.39	0.30	0.34	10.34
LINE K1	90	0	90		K1	1.33	1.33	10.00	100	8.82	11.73	1	21		0.00548	4.88	0.37	0.31	10.31
LAT K2	28	0	28		K2	0.98	0.98	10.00	100	8.82	8.64	1	18		0.00677	4.89	0.37	0.10	10.10
LINE K2-1	96	68	28		K2-1	3.76	3.76	10.00	100	8.82	33.16	1	36		0.00247	4.69	0.34	0.10	10.10
	68	0	68	K2 + K2-1	K2	0.98	4.74	10.10	100	8.82	41.81	1	30		0.01039	8.52	1.13	0.13	10.23
LINE K3	90	0	90		K3	0.97	0.97	10.00	100	8.82	8.56	1	18		0.00663	4.84	0.36	0.31	10.31
LAT K4	18	0	18		K4	0.95	0.95	10.00	100	8.82	8.38	1	18		0.00636	4.74	0.35	0.06	10.06
LINE K4	84	70	14		K4-1	6.67	6.67	10.00	100	8.82	58.83	1	4	2	0.00711	7.35	0.84	0.03	10.03
	70	0	70	K4 + K4-1	K4	0.95	7.62	10.00	100	8.82	67.21	1	4	2	0.00927	8.40	1.10	0.14	10.14
LINE K5	89	0	89		K5	0.76	0.76	10.00	100	8.82	6.70	1	18		0.00407	3.79	0.22	0.39	10.39
LAT L1	72	0	72		L1	0.76	0.76	10.00	100	8.82	6.70	1	18		0.00407	3.79	0.22	0.32	10.32
LINE L2	89	0	89		L2	0.74	0.74	10.00	100	8.82	6.53	1	18		0.00386	3.69	0.21	0.40	10.40
LINE L3	72	60	12		L3	10.36	10.36	10.00	100	8.82	91.38	1	4	3	0.00545	7.61	0.90	0.03	10.03
	60	0	60	L1 + L3	L1	0.74	11.1	10.03	100	8.82	97.90	1	4	3	0.00626	8.16	1.03	0.12	10.15
CULVERT E10B	80	0	80	L1 thru L3 + K1 thru K6	K6	17.25	44.53	18.00	100	7.15	318.39	2	6	3	0.00599	8.84	1.21	0.15	18.15
LINE M1	96	90	6		M1-1	1.01	1.01	10.00	100	8.82	8.91	1	24		0.00155	2.84	0.12	0.04	10.04
	90	0	90	M1 + M1-1	M1	0.71	1.72	10.00	100	8.82	15.17	1	24		0.00450	4.83	0.36	0.31	10.31
LINE M2	96	90	6		M2-1	0.71	0.71	10.00	100	8.82	6.26	1	24		0.00077	1.99	0.06	0.05	10.05
	90	0	90	M2 + M2-1	M2	0.72	1.43	10.00	100	8.82	12.61	1	24		0.00311	4.01	0.25	0.37	10.37
LINE M3	90	0	90		M3	1.24	1.24	10.00	100	8.82	10.94	1	21		0.00476	4.55	0.32	0.33	10.33
LINE M4	90	0	90		M4	1.38	1.38	10.00	100	8.82	12.17	1	21		0.00590	5.06	0.40	0.30	10.30
LINE M5	96	90	6		M5-1	0.49	0.49	10.00	100	8.82	4.32	1	24		0.00036	1.38	0.03	0.07	10.07
	90	0	90	M5 + M5-1	M5	0.8	1.29	10.00	100	8.82	11.38	1	24		0.00253	3.62	0.20	0.41	10.41
LINE M6	96	90	6		M6-1	0.86	0.86	10.00	100	8.82	7.59	1	24		0.00112	2.41	0.09	0.04	10.04
	90	0	90	M6 + M6-1	M6	0.92	1.78	10.00	100	8.82	15.70	1	24		0.00482	5.00	0.39	0.30	10.30
LINE M7	96	90	6		M7-1	1.27	1.27	10.00	100	8.82	11.20	1	24		0.00245	3.57	0.20	0.03	10.03
	90	0	90	M7 + M7-1	M7	0.99	2.26	10.00	100	8.82	19.93	1	24		0.00776	6.34	0.63	0.24	10.24
LINE M8	96	90	6		M8-1	1.65	1.65	10.00	100	8.82	14.55	1	27		0.00221	3.66	0.21	0.03	10.03
	90	0	90	M8 + M8-1	M8	1.05	2.7	10.00	100	8.82	23.81	1	27		0.00591	5.99	0.56	0.25	10.25
LAT N1-1	4	0	4		N1-1	0.82	0.82	10.00	100	8.82	7.23	1	18		0.00474	4.09	0.26	0.02	10.02
LINE N1	196150	196302	152	N1 + N1-1	N1	1.46	2.28	10.00	100	8.82	20.11	1	24		0.00790	6.40	0.64	0.40	10.40
LINE N2	10	0	10		N2	0.45	0.45	10.00	100	8.82	3.97	1	18		0.00143	2.25	0.08	0.07	10.07
	196302	196405	103	N1 + N1-1 + N2	N1 + N1-1	2.28	2.73	10.40	100	8.82	24.08	1	24		0.01133	7.66	0.91	0.22	10.62
LINE N3	10	0	10		N3	0.56	0.56	10.00	100	8.82	4.94	1	18		0.00221	2.80	0.12	0.06	10.06
	196405	196429	24	N1 + N1-1 + N2 + N3	N2 +N1	2.73	3.29	10.62	100	8.7	28.62	1	24		0.01601	9.11	1.29	0.04	10.66

"CONSTRUCTION RECORD DRAWINGS _8-01-2009

STATE OF TEXAS
DENNIS D. SATRE
71590
REGISTERED PROFESSIONAL ENGINEER
12/28/06

NO.	DATE	REVISION	APPROV.

DALLAS PARKWAY EXTENSION

COLLIN COUNTY, TEXAS

STORM DRAIN COMPUTATIONS

3 OF 3

Halff Associates, Inc.
ENGINEERS · ARCHITECTS · SCIENTISTS · PLANNERS · SURVEYORS

DRAWN MDB DATE DEC 2006 | DESIGNED DDS DATE
CHECKED DDS DATE | SCALE

BOND PROJECT NO. 03-13 SHEET 168 OF 271

P-2006121

CULVERT DESIGNATION	DRAINAGE AREA (acres)	Q_{50} (cfs)	Q_{100} (cfs)	CULVERT SIZE	LENGTH (ft.)	D.S. FLOW LINE	U.S. FLOW LINE	SLOPE	REQUIRED DOWNSTREAM CONDITIONS (SEE NOTE 1)	50-YEAR RUNOFF				100-YEAR RUNOFF			
										V_{50} (fps)	TW_{50}	HW_{50}	HYD. GRADE S	V_{100} (fps)	TW_{100}	HW_{100}	HYD. GRADE S
Culvert E1	26	53	58	2-5x2 RBC	101.36	625.50	625.82	0.32%	50 LF Exist. RBC & V-Ditch w/4:1 Side Slopes	2.90	627.2	627.6	0.072%	3.17	627.2	627.7	0.086%
Culvert E2	150	248	268	4-8x3 RBC	50.00	624.10	624.30	0.40%	Grass Lined Channel BW=20' SS=4:1 S=0.25%	3.10	626.6	626.9	0.039%	3.22	626.7	627.0	0.045%
Culvert E3	475	2010	2280	5-8x6 RBC	50.00	616.40	616.60	0.40%	5-8x6 RBC on 0.25%	8.38	622.0	624.0	0.223%	9.66	622.3	624.6	0.287%
Culvert E4	147	412	447	2-6x4 RBC	70.00	615.72	616.00	0.40%	Grass Lined Channel BW=8' SS=4:1 S=0.3%	8.58	619.7	622.0	0.377%	9.31	619.8	622.4	0.443%
Culvert E5	512	2200	2325	6-10x5 RBC	50.00	613.00	613.20	0.40%	Grass Lined Channel BW=50' SS=4:1 S=0.25%	7.33	618.5	619.2	0.177%	7.75	618.7	619.5	0.198%
Culvert E6	216	945	1070	3-8x5 RBC	200.00	611.00	611.80	0.40%	Grass Lined Channel BW=13' SS=4:1 S=0.3%	7.88	616.0	618.3	0.228%	8.92	616.3	619.0	0.292%
Culvert E7	640	2080	2380	6-8x5 RBC	50.00	611.00	611.20	0.40%	Grass Lined Channel BW=38' SS=4:1 S=0.3%	8.67	616.3	618.1	0.276%	9.92	616.7	619.0	0.361%
Culvert E8	689	2360	2535	4-10x6 RBC	92.00	611.11	611.50	0.42%	4-10x6 RBC on 0.30%	9.83	617.2	619.7	0.273%	10.56	617.4	620.3	0.315%
Culvert E9	1140	2235	2615	4-10x7 RBC	50.00	607.35	607.50	0.30%	Grass Lined Channel BW=30' SS=4:1 S=0.3%	9.31	613.4	615.5	0.159%	9.98	613.9	616.3	0.217%
Culvert E10A	58	355	386	2-6x3 RBC	115.00	628.05	628.50	0.39%	Grass Lined Channel BW=20' SS=4:1 S=0.3%	9.86	631.8	635.3	0.634%	10.72	632.0	636.1	0.750%
3 Culvert E10B	54.1	120	131	1-6x3 RBC	88.00	628.05	628.31	0.30%		6.67	631.8	633.2	0.290%	7.28	632.0	633.7	0.343% 3
Culvert E11	95	581	633	4-8x3 RBC	50.00	644.00	644.20	0.40%	4-8x3 RBC on 0.25%	8.07	647.0	648.0	0.213%	8.79	647.1	648.2	0.252%
2 Culvert E12 (*)	56.3	350	385	3-6x3 RBC	1210.00	646.11	649.14	0.25%	Grass Lined Channel BW=15' SS=4:1 S=0.3%	8.07	649.1	653.4	0.273%	8.79	649.2	654.4	0.332%
2 Culvert E12A (**)	36.5	76	83	1-6x3 RBC	1210.00	646.11	649.14	0.25%	Grass Lined Channel BW=6' SS=4:1 S=0.3%	5.30	648.5	652.1	0.115%	5.79	648.5	652.3	0.139%
2 Culvert E12B (**)	19.8	48	52	2-6x3 RBC	145.00	646.11	646.47	0.25%	Grass Lined Channel BW=6' SS=4:1 S=0.3%	1.67	648.5	648.6	0.011%	1.81	648.5	648.6	0.014%
2 1 Culvert W1	28	56	64	1-7x3 RBC	93.50	622.72	623.52	0.86%	Grass Lined Channel BW=6' SS=4:1 S=0.3%	2.67	626.0	626.3	0.043%	3.05	626.1	626.4	0.057%
2 Culvert W2	170	280	300	4-8x3 RBC	75.00	623.04	623.26	0.29%	Grass Lined Channel BW=6' SS=4:1 S=0.3%	2.92	626.3	626.6	0.049%	3.13	626.4	626.7	0.057%

(*) - Culvert analyzed for ultimate conditions.

NOTES:
1. CULVERT DESIGNS ARE BASED ON ASSUMED DOWNSTREAM IMPROVEMENTS TO BE INCORPORATED INTO FUTURE DNT CORRIDOR CONSTRUCTION. THESE ARE MINIMUM REQUIREMENTS AND MAY NEED TO BE INCREASED TO ACCOMODATE ADDITIONAL MAIN LANE RUNOFF.

NO.	DATE	REVISION	APPROV.
3	9/27/07	REVISED CULVERT E10B CONFIGURATION	DDS
2	5/5/07	TxDOT REVISIONS & REVISED CULVERT W2	DDS
1	3/7/07	CULVERT W1 REVISED TO 7x3 RCB	DDS

"CONSTRUCTION RECORD DRAWINGS _8-01-2009

STATE OF TEXAS
DENNIS D. SATRE
71590
REGISTERED PROFESSIONAL ENGINEER
9.27.07

DALLAS PARKWAY EXTENSION

COLLIN COUNTY

CULVERT COMPUTATIONS

Halff Associates, Inc.
ENGINEERS · ARCHITECTS · SCIENTISTS · PLANNERS · SURVEYORS

DRAWN MDB DATE DEC 2006 DESIGNED DDS DATE
CHECKED DDS DATE SCALE

BOND PROJECT NO. 03-13 SHEET 169 OF 271

8:55:45 AM
i:\23000s\23819\frisco\DGN\23819SDDAT05.dgn

10/10/2007 8:55:45 AM

P-200612-01

STA 9+89.8, CULVERT =STA 1642+14, O/S 10.2'RT, ENTER LAT B1

STA 1642+14 =STA 10+00, CULVERT W1 8'x3' RCBC

PI STA 1642+32.6 O/S 10.2'LT 60' HORIZONTAL BEND

℄ & PGL WSR

℄ STA 1643+25 CULVERT W2 4-8'x5' RCBC

89.5' TYP.

15' EXIST ROW

LAT B1 21" RCP

US 380

75.0' EASEMENT

℄ 380

STA 1642+35 10' REC. CURB INLET-B1 TC= 628.84 FL= 624.59

4:1 TYP.

R-700'

0.30%

PC STA 1645+87.7 O/S 74.53'RT (WSR) FL=624.15

℄ & PGL CROSSOVER

℄ STA 1180+28.11 = ℄ STA 1638+38.53

20' BOTTOM

PT STA 1648+90.62 O/S 32.2'RT FL=625.05

32' TYP.

FL=626.00

STA 1640+48.7 O/S 75.0'LT. CONST. SET-CD 30° SKEW FL=624.75

STA 1644+29.6 OFF 75.0'LT CONST. SET-CD 30° SKEW FL=624.68

℄ DNT

STA 1644+62.4 O/S 19.5'LT. 60° PIPE WYE ENTER LAT A2 END 30" RCP, BEGIN 27" RCP

0.50%

0.30%

4:1 TYP.

COUNTY ROAD 27 (TO BE ABANDONED)

LINE A1 21" RCP

75.0' TYP.

℄ STA 1642+00.00 CULVERT E2 4-8'x5' RCBC

LINE A2-1 30" RCP

LAT A2 21" RCP

2.0%

24' @ 2-12' LNS

15' TYP.

EXIST ROW

℄ STA 1639+11.69 CULVERT E1 2-5'x2'

10'

FL=628.10 SEE TYPICAL SECTIONS

US 380 ROW

STA. 1640+04.2 10' REC. CURB INLET-A1 FL=625.74 TC=629.99

PROPOSED DRAINAGE EASEMENT

FL=628.10

STA 1644+50 10' REC. CURB INLET-A2 FL=625.43 TC=629.68

STA 1644+78.7 O/S 7.9'RT HORIZ INLET TYPE H (MOD) FL=625.00 LIP=627.50

℄ & PGL ESR

FL=628.70 GRADE TO DRAIN 0.30% MIN. SEE TYPICAL SECTIONS

MATCH LINE 1650+00

NOTES:

1. EXISTING UTILITIES SHOWN ARE APPROXIMATE. CONTRACTOR SHALL CONFIRM PRESENCE AND LOCATION OF ALL UTILITIES PRIOR TO WORK.

2. SEE PAVING PLANS FOR ROADWAY GEOMETRY.

3. SEE DRAINAGE DETAILS FOR INLET AND S.E.T. LAYOUT DIMENSIONS.

4. SEE CULVERT LAYOUTS FOR ADDITIONAL INFORMATION AND GRADING DETAILS.

0 50 100 150 200

SCALE IN FEET

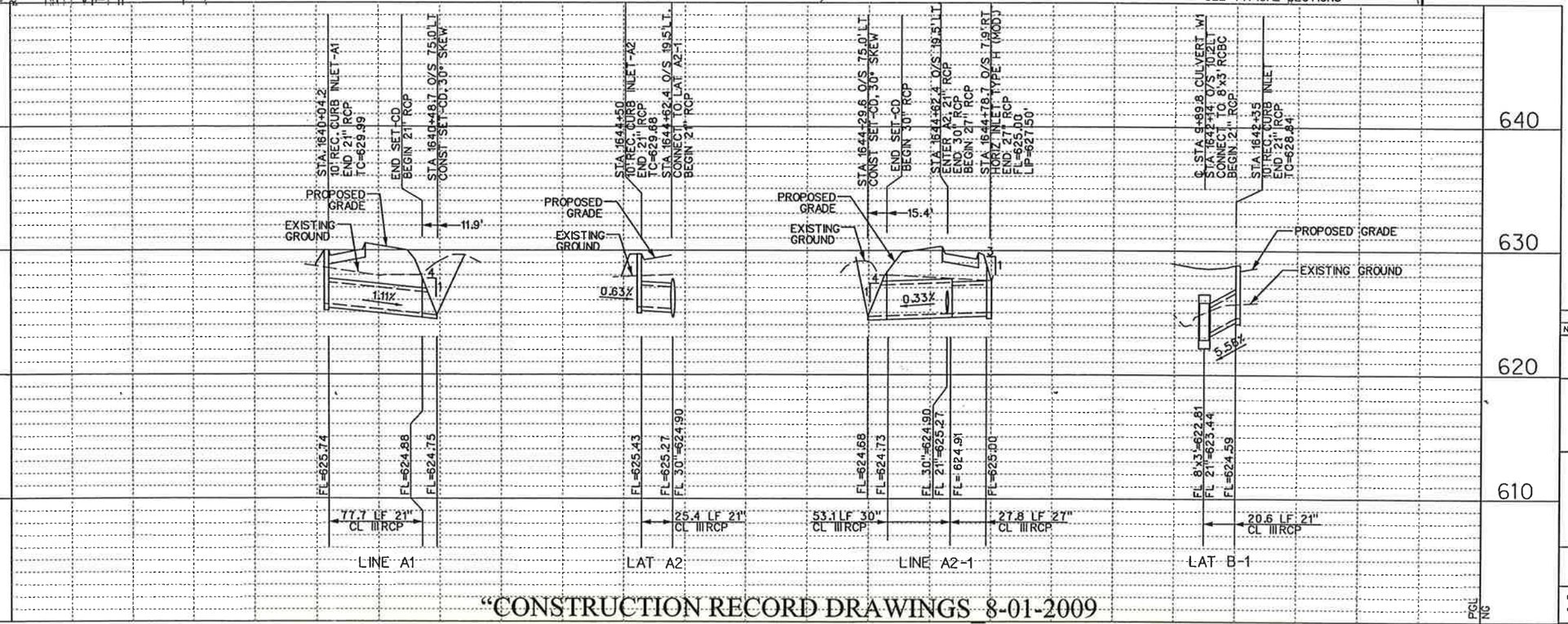

"CONSTRUCTION RECORD DRAWINGS 8-01-2009

STATE OF TEXAS
DENNIS D. SATRE
71590
REGISTERED PROFESSIONAL ENGINEER
6-01-07

NO.	DATE	REVISION	APPROV.
1	6/1/07	CULVERT E2 & W2 REVISION - C.O. #1	D. SATRE

DALLAS PARKWAY EXTENSION

COLLIN COUNTY

DRAINAGE PLAN – PROFILE
EAST SERVICE ROAD
BEGIN TO STA 1650+00

1

Halff Associates, Inc.
ENGINEERS · ARCHITECTS · SCIENTISTS · PLANNERS · SURVEYORS

DRAWN MDB DATE DEC 2006 DESIGNED DDS DATE
CHECKED DDS DATE SCALE

BOND PROJECT NO. 03-13 SHEET 170 OF 271

5:00:00 PM i:\23000s\23819\FRISCO\DGN\23819SDPLP01.dgn

6/1/2007 5:00:00 PM

P-200612-01

"CONSTRUCTION RECORD DRAWINGS_8-01-2009

i:\23000s\23819\frisco\dgn\23819sdplp02.dgn

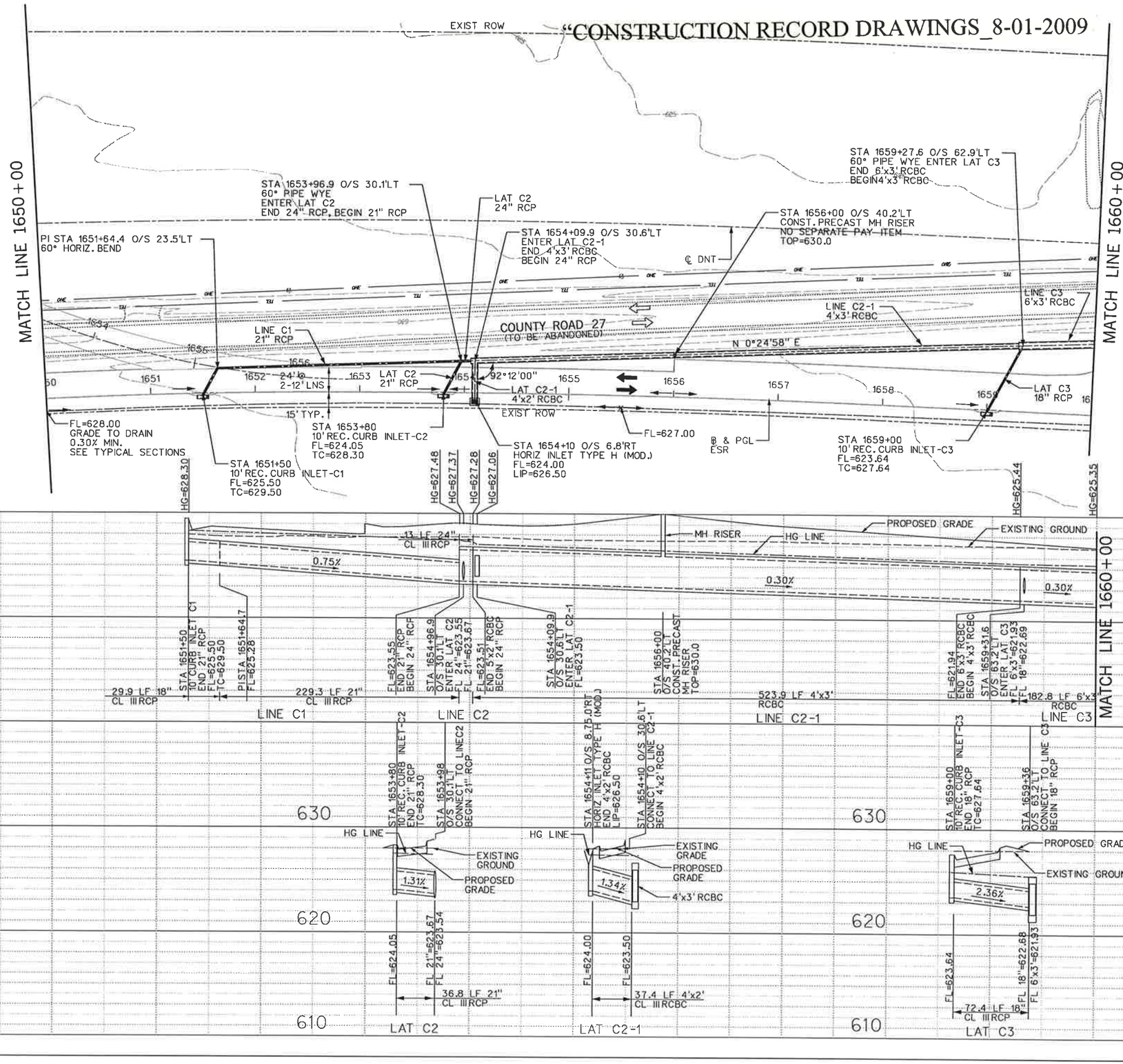

NOTES:

1. EXISTING UTILITIES SHOWN ARE APPROXIMATE. CONTRACTOR SHALL CONFIRM PRESENCE AND LOCATION OF ALL UTILITIES PRIOR TO WORK.

2. SEE PAVING PLANS FOR ROADWAY GEOMETRY.

3. SEE DRAINAGE DETAILS FOR INLET AND S.E.T. LAYOUT DIMENSIONS.

4. SEE CULVERT LAYOUTS FOR ADDITIONAL INFORMATION AND GRADING DETAILS.

0 50 100 150 200
SCALE IN FEET

STATE OF TEXAS
DENNIS D. SATRE
71590
REGISTERED PROFESSIONAL ENGINEER
12/28/06

NO.	DATE	REVISION	APPROV.

DALLAS PARKWAY EXTENSION

COLLIN COUNTY

DRAINAGE PLAN – PROFILE

EAST SERVICE ROAD
STA 1650+00 TO STA 1660+00

2

Halff Associates, Inc.
ENGINEERS · ARCHITECTS · SCIENTISTS · PLANNERS · SURVEYORS

DRAWN MDB	DATE DEC 2006	DESIGNED DDS	DATE
CHECKED DDS	DATE	SCALE	

BOND PROJECT NO. 03-13 SHEET 171 OF 271

P-200612-01

11:58:12 AM
i:\23000s\23819\frisco\dgn\23819sdplp02.dgn

12/26/2006 11:58:12 AM

i:\23000s\23819\frisco\dgn\23819sdplp03.dgn

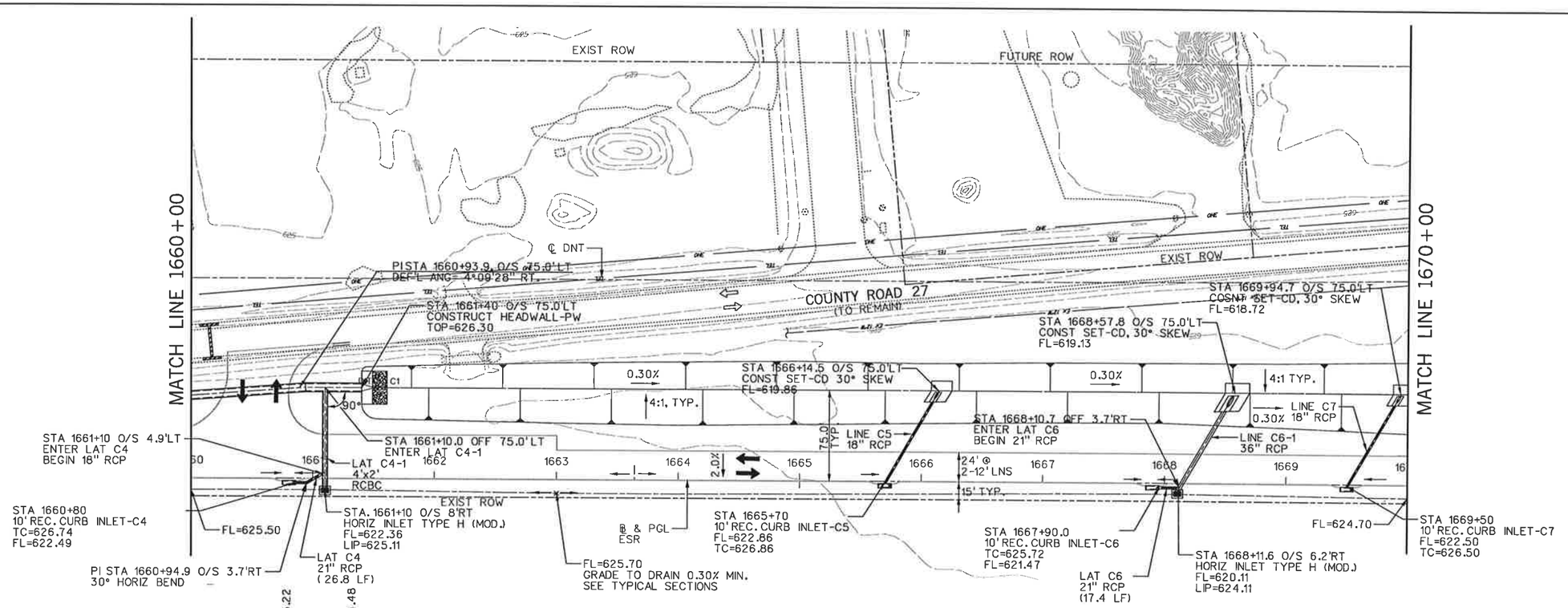

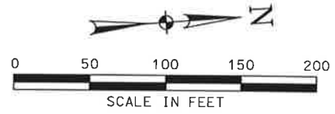

NOTES:

1. EXISTING UTILITIES SHOWN ARE APPROXIMATE. CONTRACTOR SHALL CONFIRM PRESENCE AND LOCATION OF ALL UTILITIES PRIOR TO WORK.

2. SEE PAVING PLANS FOR ROADWAY GEOMETRY.

3. SEE DRAINAGE DETAILS FOR INLET AND S.E.T. LAYOUT DIMENSIONS.

4. SEE CULVERT LAYOUTS FOR ADDITIONAL INFORMATION AND GRADING DETAILS.

"CONSTRUCTION RECORD DRAWINGS_8-01-2009

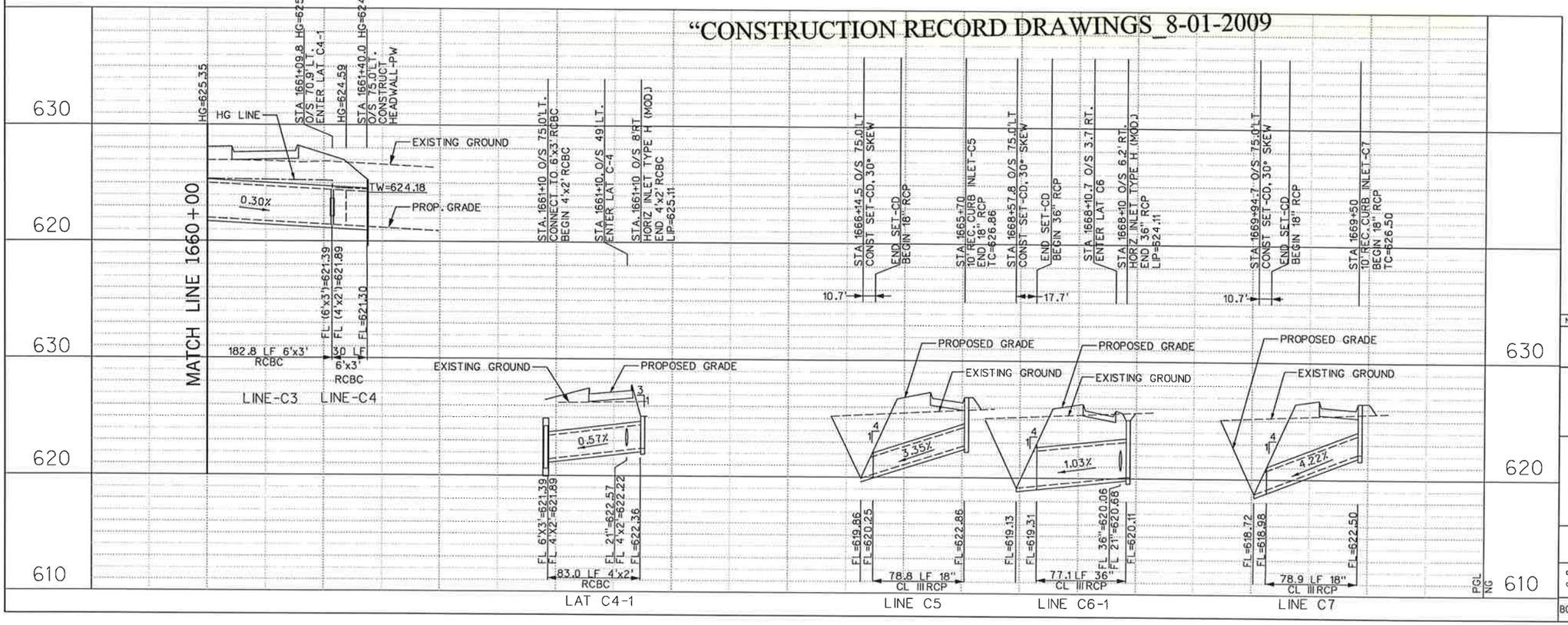

NO.	DATE	REVISION	APPROV.

DALLAS PARKWAY EXTENSION

COLLIN COUNTY

DRAINAGE PLAN – PROFILE
EAST SERVICE ROAD
STA 1660+00 TO STA 1670+00

3

Halff Associates, Inc.
ENGINEERS · ARCHITECTS · SCIENTISTS · PLANNERS · SURVEYORS

DRAWN MDB DATE DEC 2006 | DESIGNED DDS DATE
CHECKED DDS DATE | SCALE

BOND PROJECT NO. 03-13 SHEET 172 OF 271

P-200612-01

11:58:14 AM
i:\23000s\23819\frisco\dgn\23819sdplp03.dgn
12/28/2006 11:58:14 AM

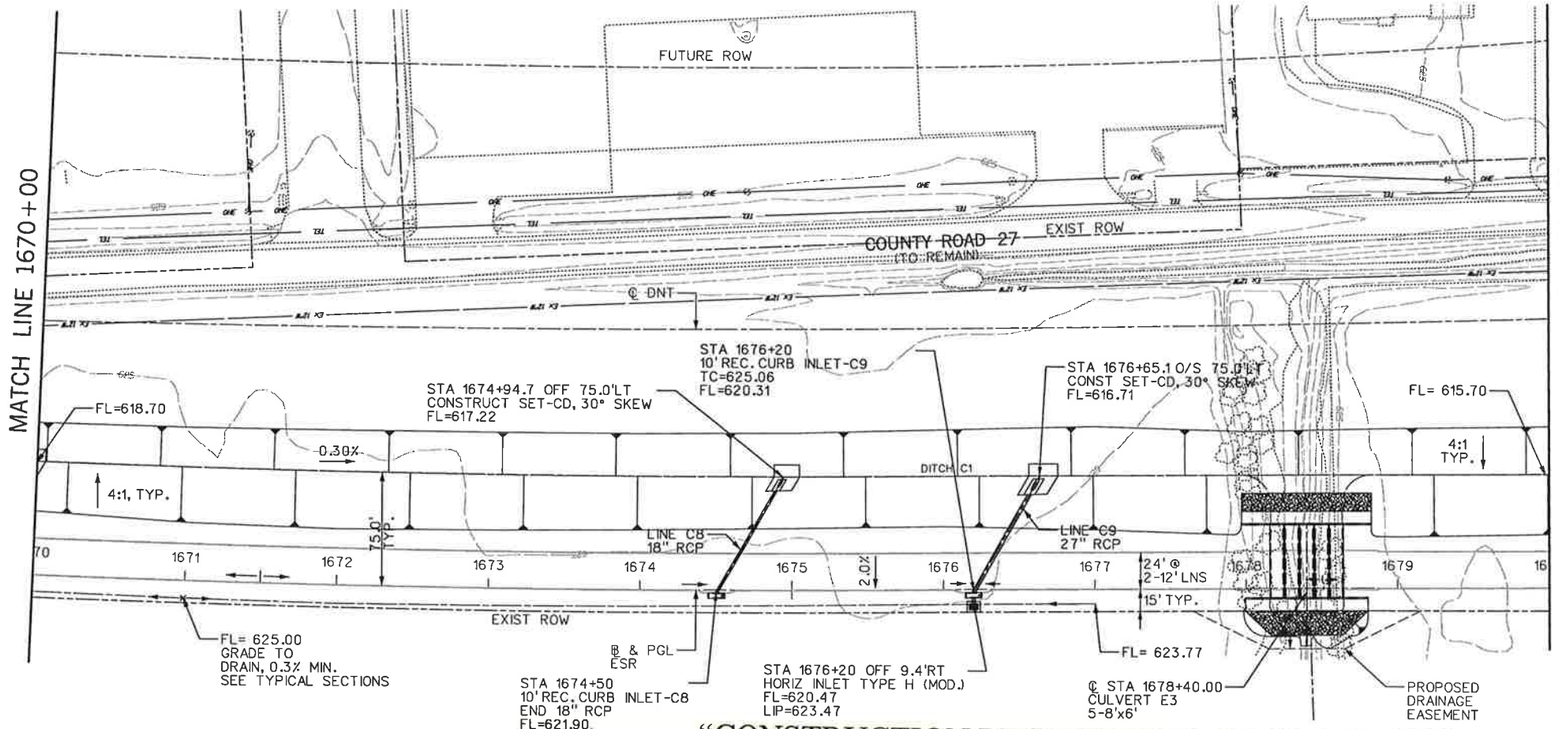

"CONSTRUCTION RECORD DRAWINGS_8-01-2009

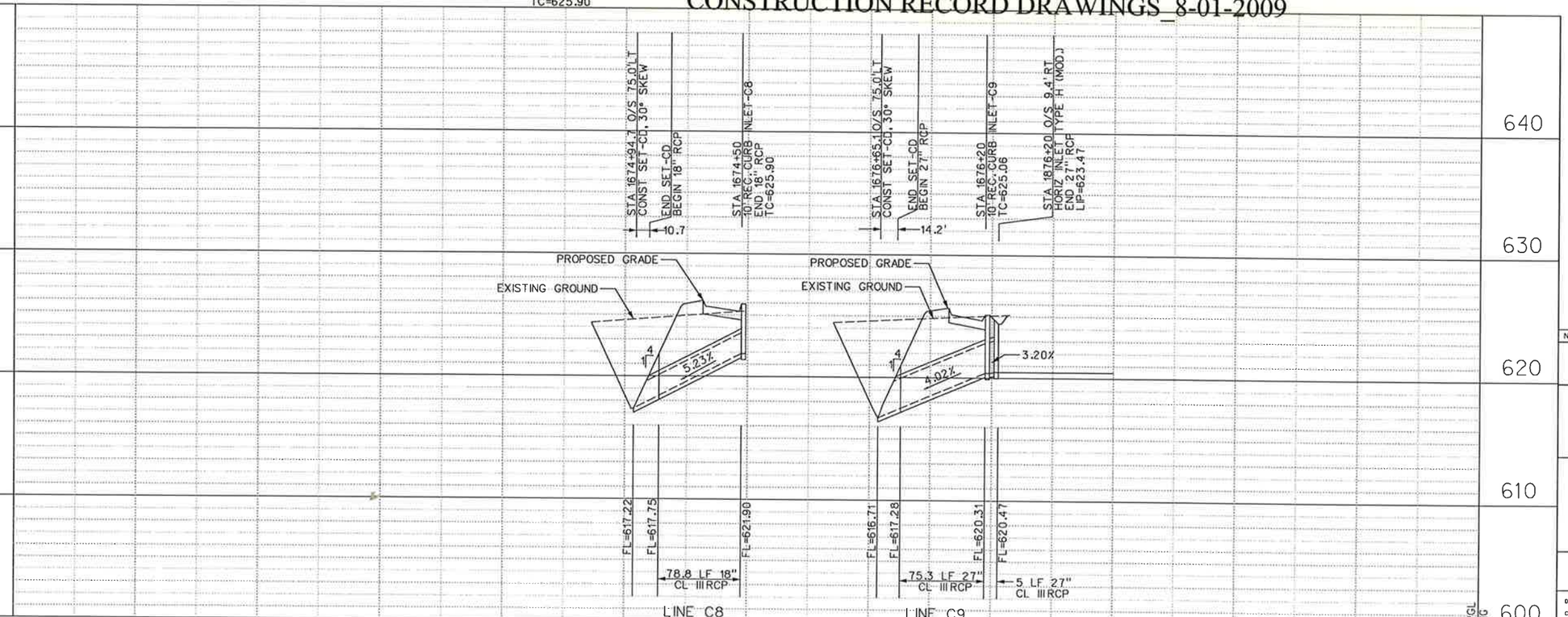

0 50 100 150 200
SCALE IN FEET

NOTES:

1. EXISTING UTILITIES SHOWN ARE APPROXIMATE. CONTRACTOR SHALL CONFIRM PRESENCE AND LOCATION OF ALL UTILITIES PRIOR TO WORK.

2. SEE PAVING PLANS FOR ROADWAY GEOMETRY.

3. SEE DRAINAGE DETAILS FOR INLET AND S.E.T. LAYOUT DIMENSIONS.

4. SEE CULVERT LAYOUTS FOR ADDITIONAL INFORMATION AND GRADING DETAILS.

STATE OF TEXAS
DENNIS D. SATRE
71590
REGISTERED PROFESSIONAL ENGINEER
12/28/06

NO.	DATE	REVISION	APPROV.

DALLAS PARKWAY EXTENSION

COLLIN COUNTY

DRAINAGE PLAN – PROFILE
EAST SERVICE ROAD
STA 1670+00 TO STA 1680+00

4

Halff Associates, Inc.
ENGINEERS · ARCHITECTS · SCIENTISTS · PLANNERS · SURVEYORS

DRAWN MDB DATE DEC 2006 DESIGNED DDS DATE
CHECKED DDS DATE SCALE

BOND PROJECT NO. 03-13 SHEET 173 OF 271

P-200612-01

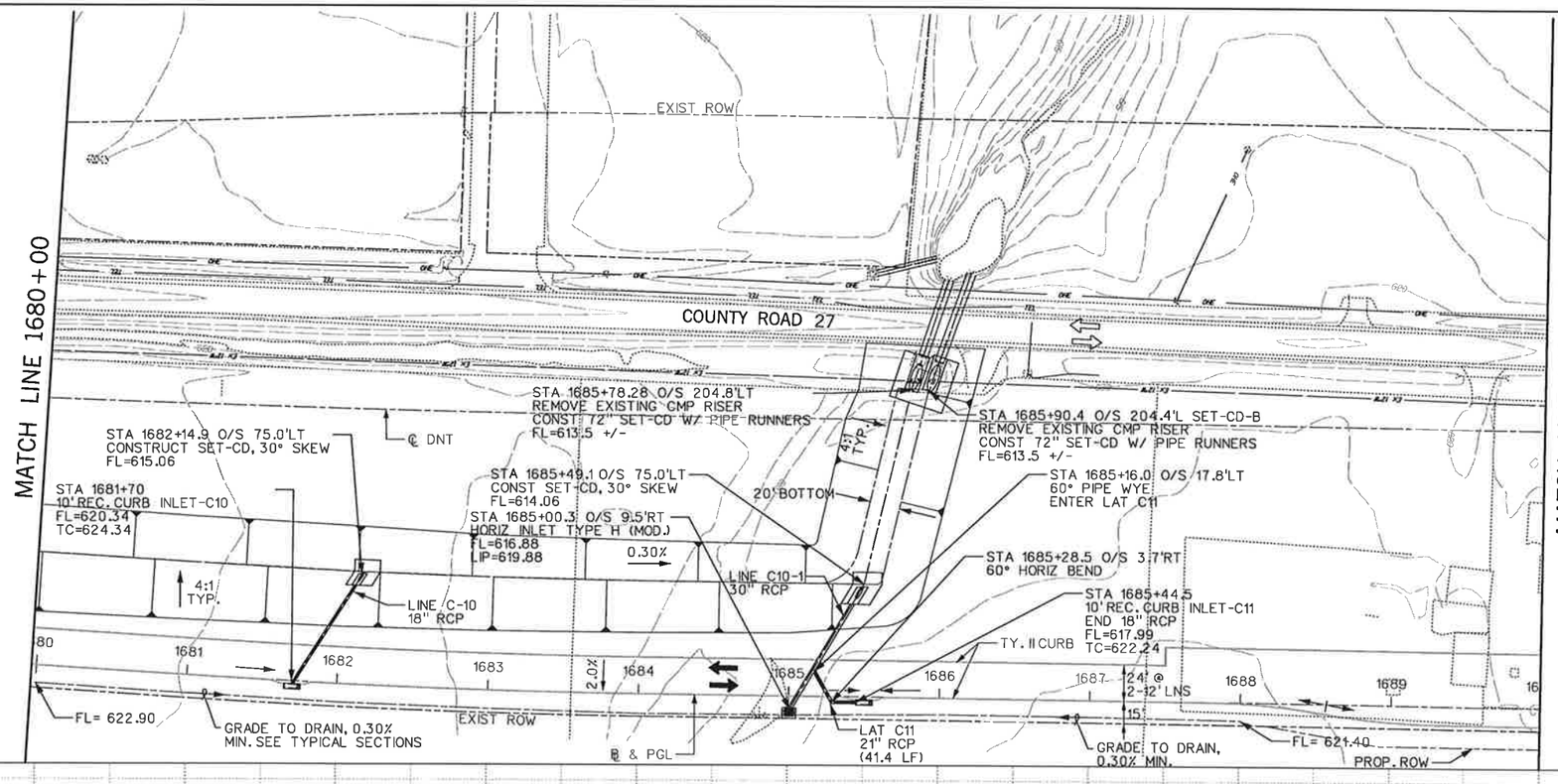

NOTES:

1. EXISTING UTILITIES SHOWN ARE APPROXIMATE. CONTRACTOR SHALL CONFIRM PRESENCE AND LOCATION OF ALL UTILITIES PRIOR TO WORK.

2. SEE PAVING PLANS FOR ROADWAY GEOMETRY.

3. SEE DRAINAGE DETAILS FOR INLET AND S.E.T. LAYOUT DIMENSIONS.

4. SEE CULVERT LAYOUTS FOR ADDITIONAL INFORMATION AND GRADING DETAILS.

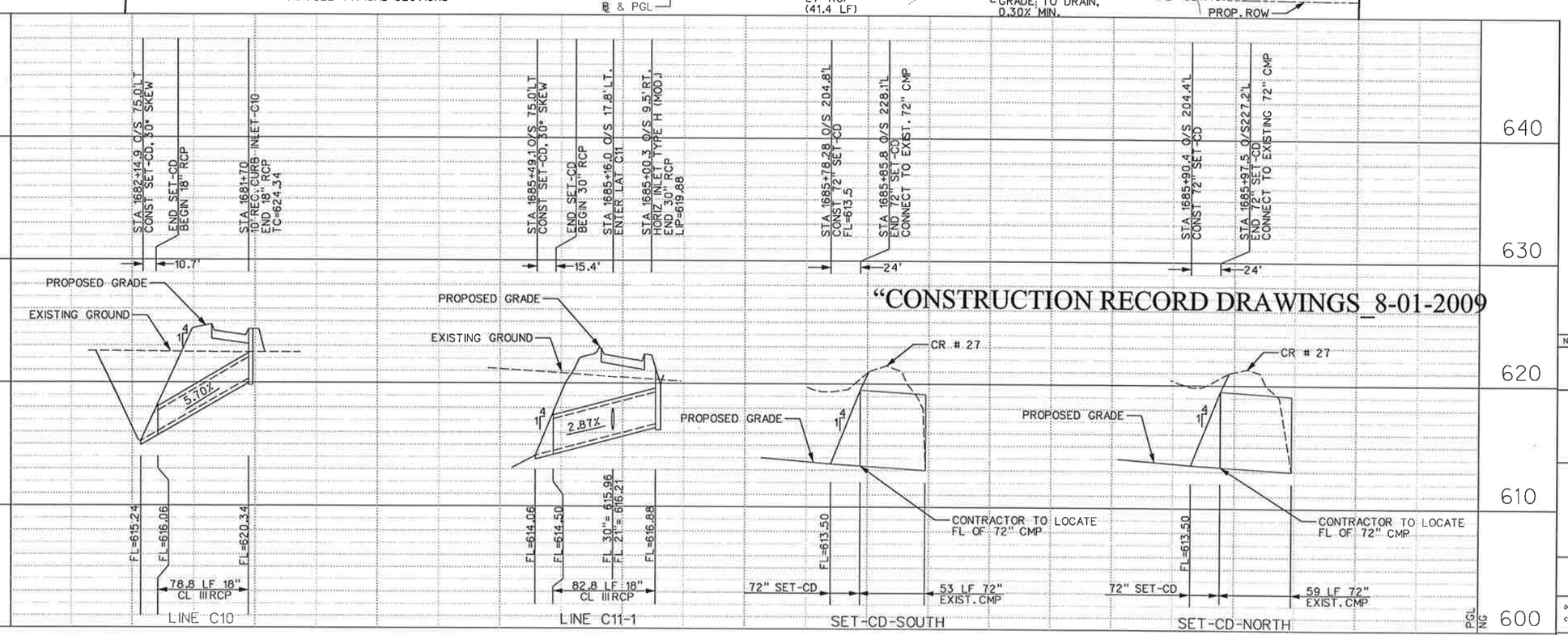

"CONSTRUCTION RECORD DRAWINGS_8-01-2009

STATE OF TEXAS
DENNIS D. SATRE
71590
REGISTERED PROFESSIONAL ENGINEER
12/28/06

NO.	DATE	REVISION	APPROV.

DALLAS PARKWAY EXTENSION

COLLIN COUNTY

DRAINAGE PLAN – PROFILE
EAST SERVICE ROAD
STA 1680+00 TO STA 1690+00

5

Halff Associates, Inc.
ENGINEERS · ARCHITECTS · SCIENTISTS · PLANNERS · SURVEYORS

DRAWN MDB DATE DEC 2006 | DESIGNED DDS DATE
CHECKED DDS DATE | SCALE

BOND PROJECT NO. 03-13 SHEET 174 OF 271

P-200612-01

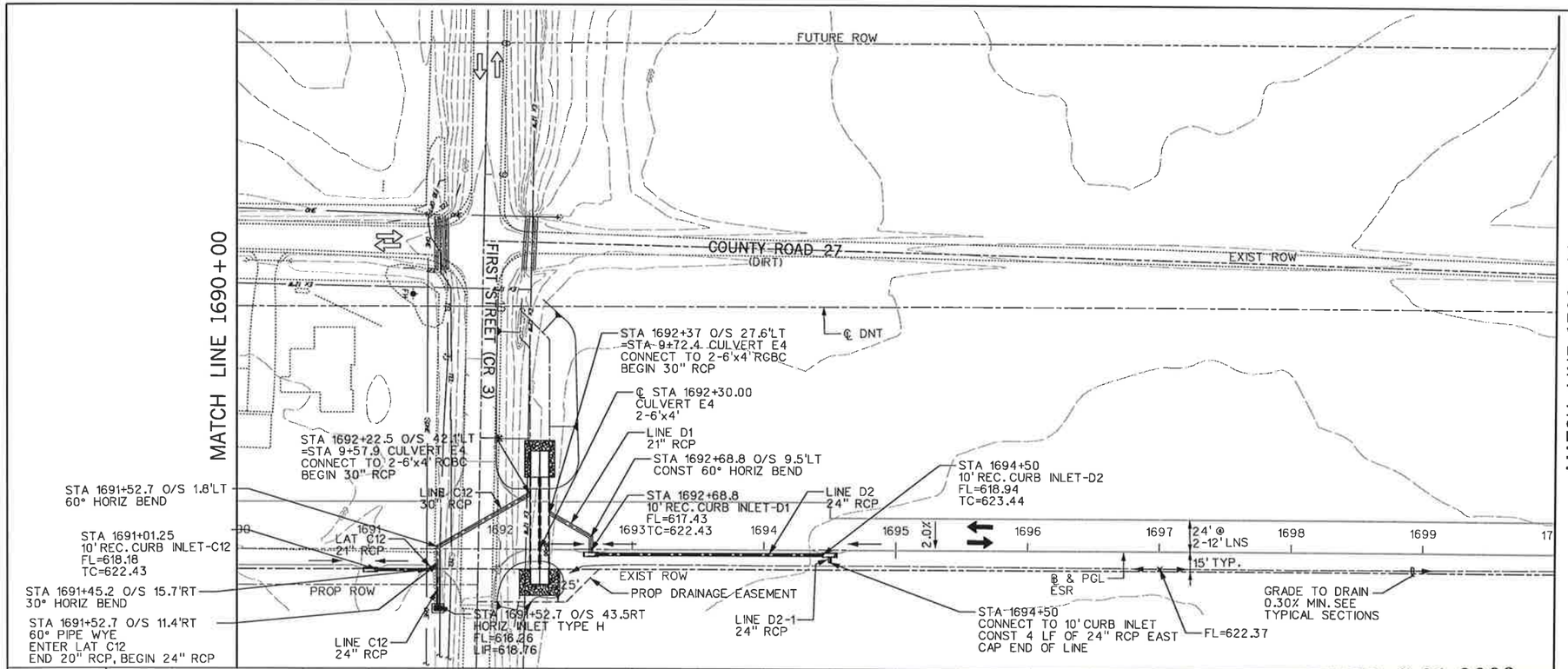

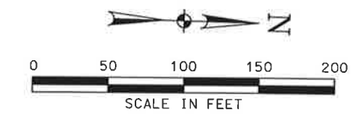

NOTES:

1. EXISTING UTILITIES SHOWN ARE APPROXIMATE. CONTRACTOR SHALL CONFIRM PRESENCE AND LOCATION OF ALL UTILITIES PRIOR TO WORK.

2. SEE PAVING PLANS FOR ROADWAY GEOMETRY.

3. SEE DRAINAGE DETAILS FOR INLET AND S.E.T. LAYOUT DIMENSIONS.

4. SEE CULVERT LAYOUTS FOR ADDITIONAL INFORMATION AND GRADING DETAILS.

"CONSTRUCTION RECORD DRAWINGS 8-01-2009

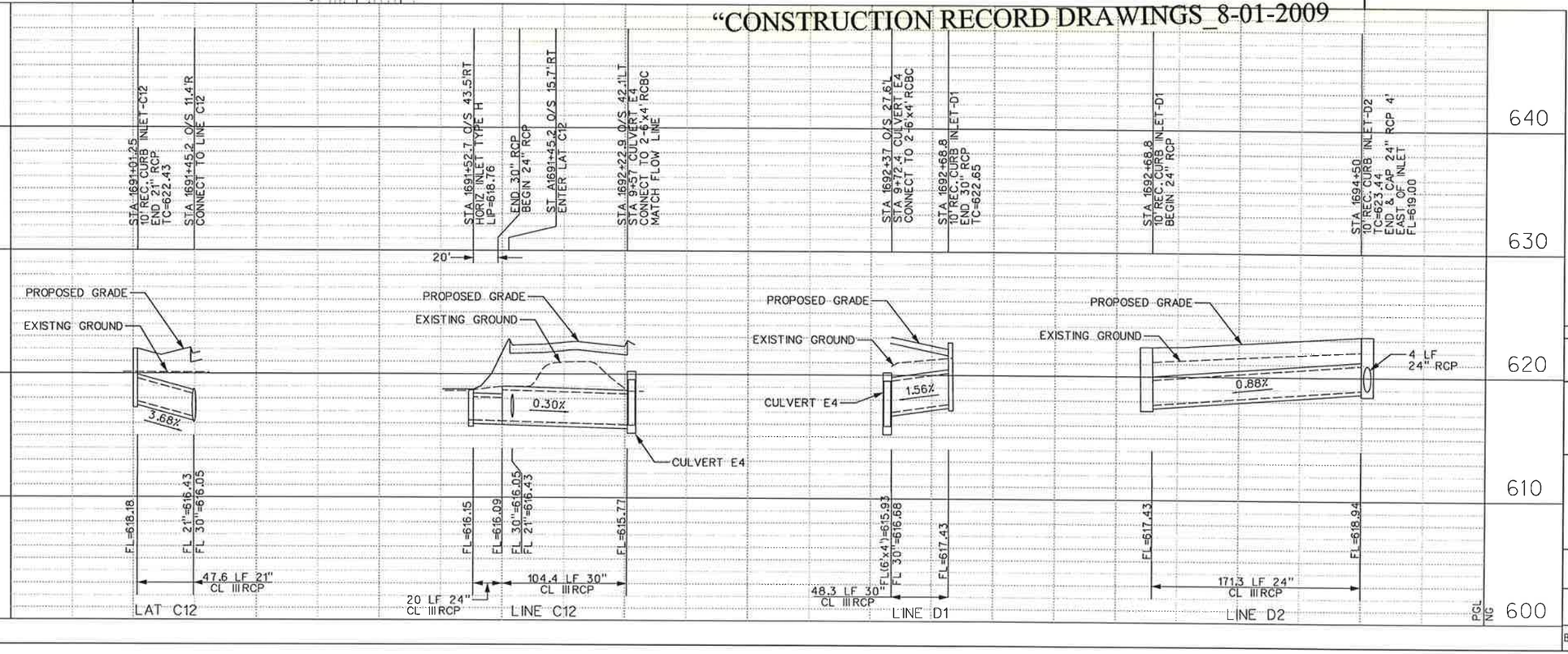

NO.	DATE	REVISION	APPROV.

DALLAS PARKWAY EXTENSION

COLLIN COUNTY

DRAINAGE PLAN – PROFILE
EAST SERVICE ROAD
STA 1690+00 TO STA 1700+00

6

Halff Associates, Inc.
ENGINEERS · ARCHITECTS · SCIENTISTS · PLANNERS · SURVEYORS

DRAWN MDB	DATE DEC 2006	DESIGNED DDS	DATE
CHECKED DDS	DATE	SCALE	

BOND PROJECT NO. 03-13 SHEET 175 OF 271

P-200612-01

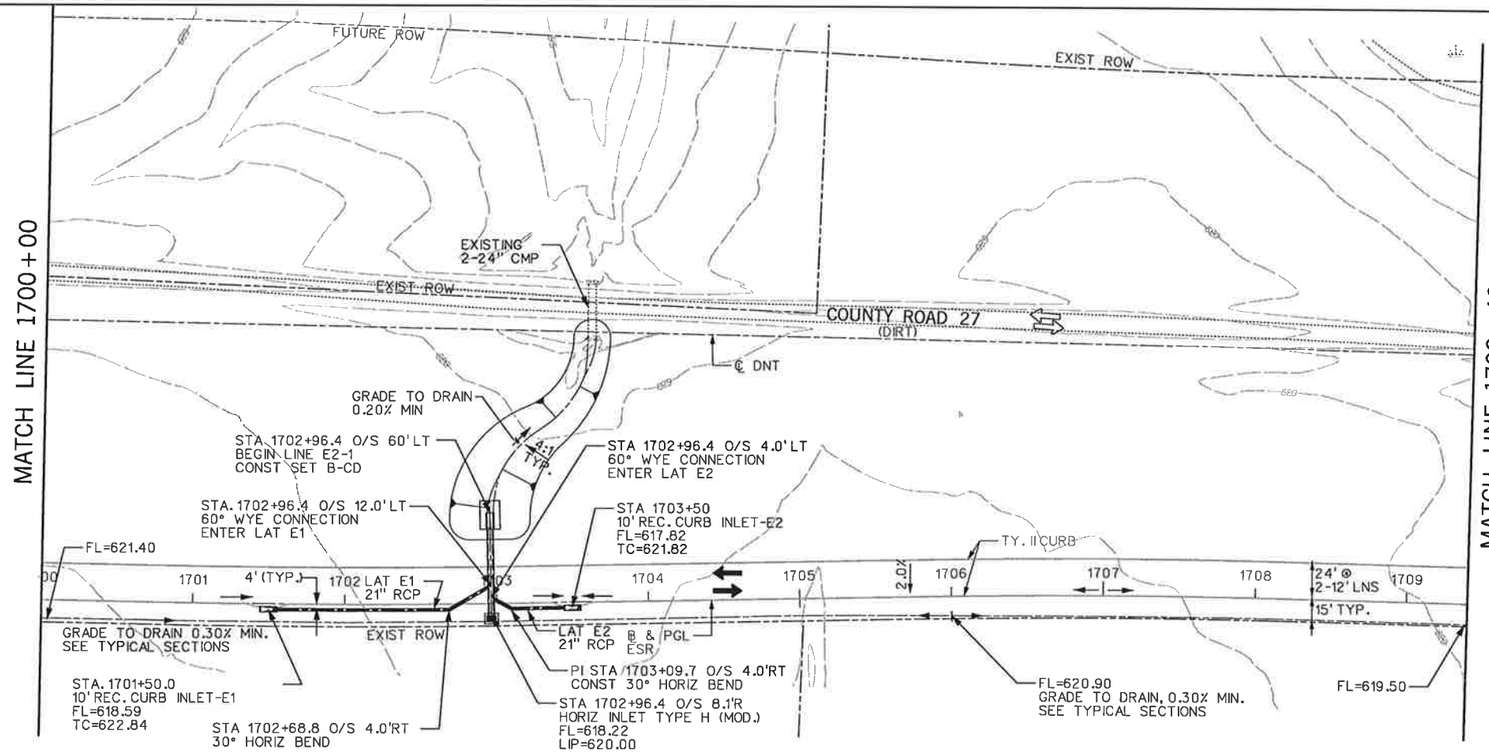

NOTES:

1. EXISTING UTILITIES SHOWN ARE APPROXIMATE. CONTRACTOR SHALL CONFIRM PRESENCE AND LOCATION OF ALL UTILITIES PRIOR TO WORK.

2. SEE PAVING PLANS FOR ROADWAY GEOMETRY.

3. SEE DRAINAGE DETAILS FOR INLET AND S.E.T. LAYOUT DIMENSIONS.

4. SEE CULVERT LAYOUTS FOR ADDITIONAL INFORMATION AND GRADING DETAILS.

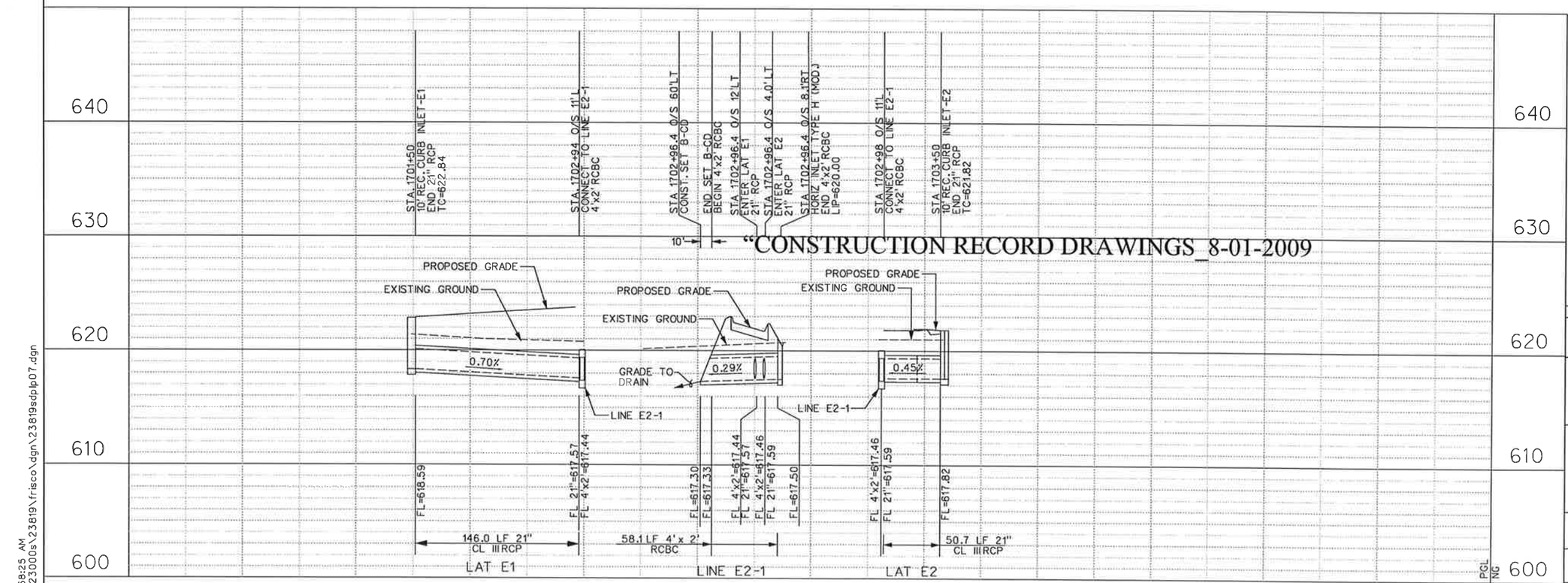

STATE OF TEXAS
DENNIS D. SATRE
71590
REGISTERED PROFESSIONAL ENGINEER
12/28/06

NO.	DATE	REVISION	APPROV.

DALLAS PARKWAY EXTENSION

COLLIN COUNTY

DRAINAGE PLAN – PROFILE
EAST SERVICE ROAD
STA 1700+00 TO STA 1709+40

7

Halff Associates, Inc.
ENGINEERS · ARCHITECTS · SCIENTISTS · PLANNERS · SURVEYORS

DRAWN MDB DATE DEC 2006 DESIGNED DDS DATE
CHECKED DDS DATE SCALE

BOND PROJECT NO. 03-13 SHEET 176 OF 271

P-200612-01

11:58:25 AM
i:\23000s\23819\frisco\dgn\23819sdplp07.dgn

12/28/2006 11:58:25 AM

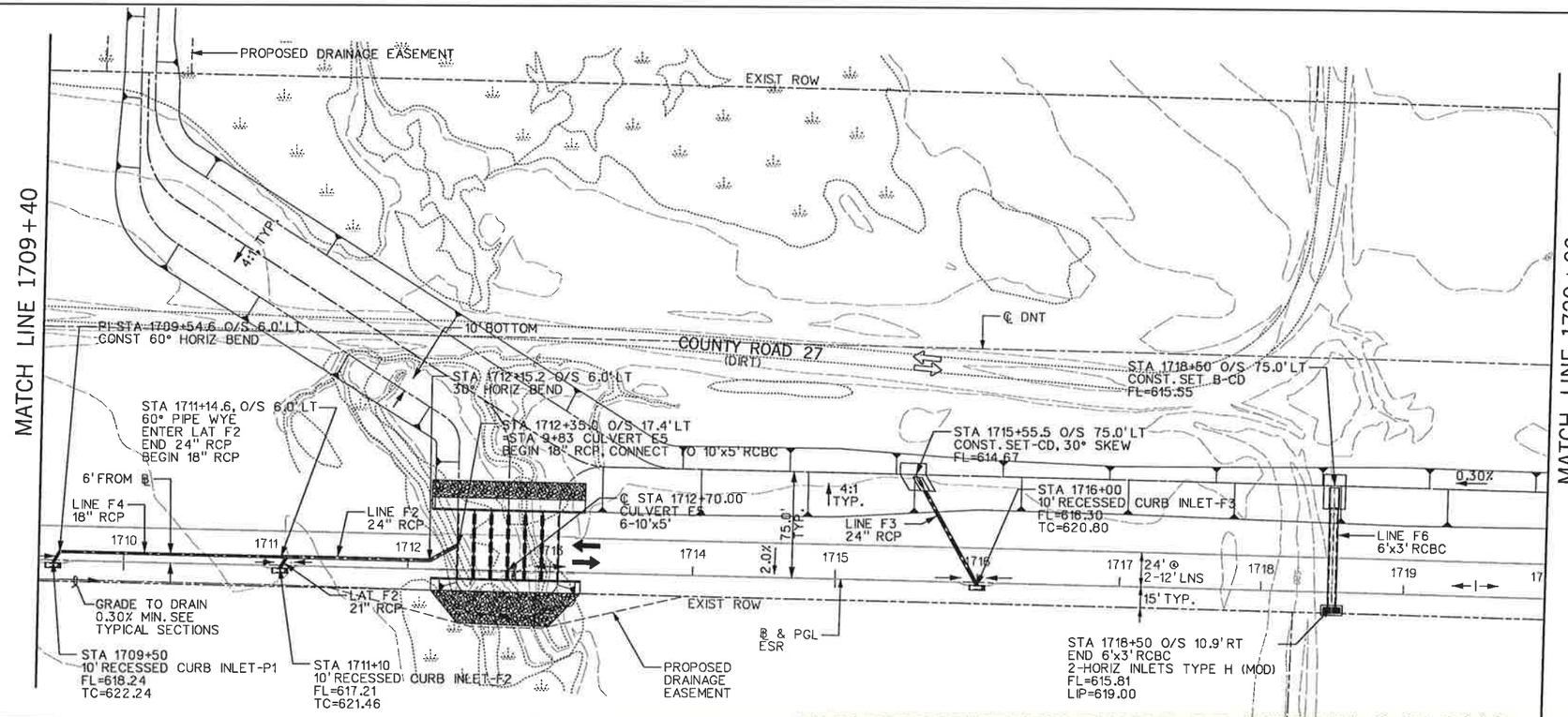

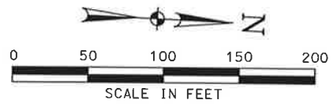

NOTES:

1. EXISTING UTILITIES SHOWN ARE APPROXIMATE. CONTRACTOR SHALL CONFIRM PRESENCE AND LOCATION OF ALL UTILITIES PRIOR TO WORK.

2. SEE PAVING PLANS FOR ROADWAY GEOMETRY.

3. SEE DRAINAGE DETAILS FOR INLET AND S.E.T. LAYOUT DIMENSIONS.

4. SEE CULVERT LAYOUTS FOR ADDITIONAL INFORMATION AND GRADING DETAILS.

"CONSTRUCTION RECORD DRAWINGS 8-01-2009

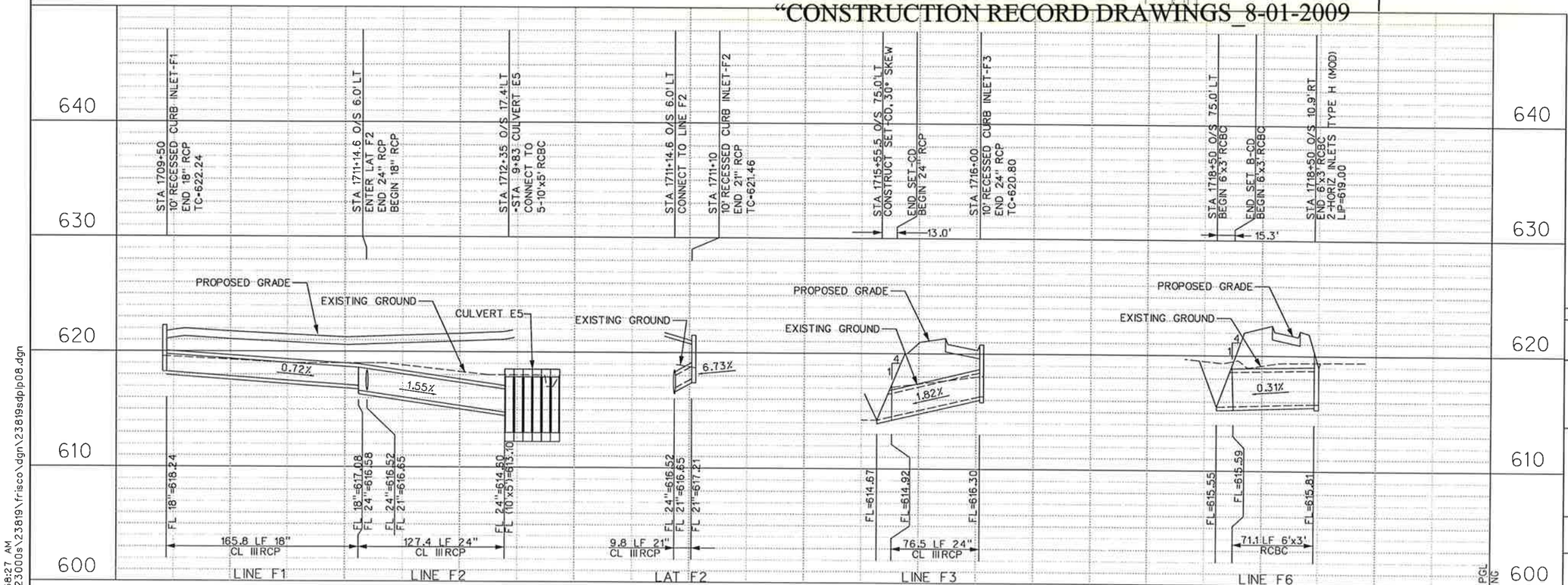

NO.	DATE	REVISION	APPROV.

DALLAS PARKWAY EXTENSION

COLLIN COUNTY

DRAINAGE PLAN – PROFILE
EAST SERVICE ROAD
STA 1709+40 TO STA 1720+00

8

Halff Associates, Inc.
ENGINEERS · ARCHITECTS · SCIENTISTS · PLANNERS · SURVEYORS

DRAWN	MDB	DATE DEC 2006	DESIGNED	DDS	DATE
CHECKED	DDS	DATE	SCALE		

BOND PROJECT NO. 03-13 SHEET 177 OF 271

P-200612201

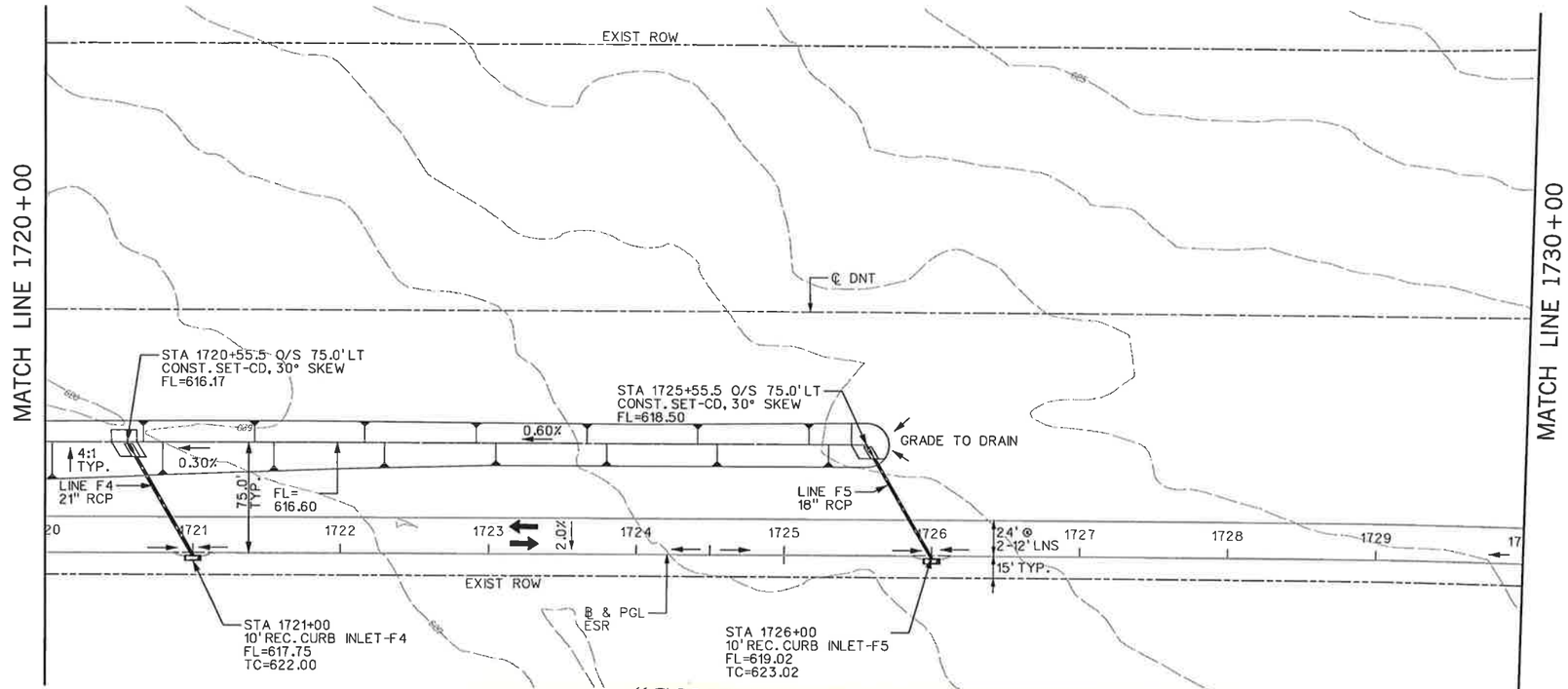

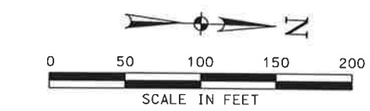

NOTES:

1. EXISTING UTILITIES SHOWN ARE APPROXIMATE. CONTRACTOR SHALL CONFIRM PRESENCE AND LOCATION OF ALL UTILITIES PRIOR TO WORK.

2. SEE PAVING PLANS FOR ROADWAY GEOMETRY.

3. SEE DRAINAGE DETAILS FOR INLET AND S.E.T. LAYOUT DIMENSIONS.

4. SEE CULVERT LAYOUTS FOR ADDITIONAL INFORMATION AND GRADING DETAILS.

"CONSTRUCTION RECORD DRAWINGS_8-01-2009

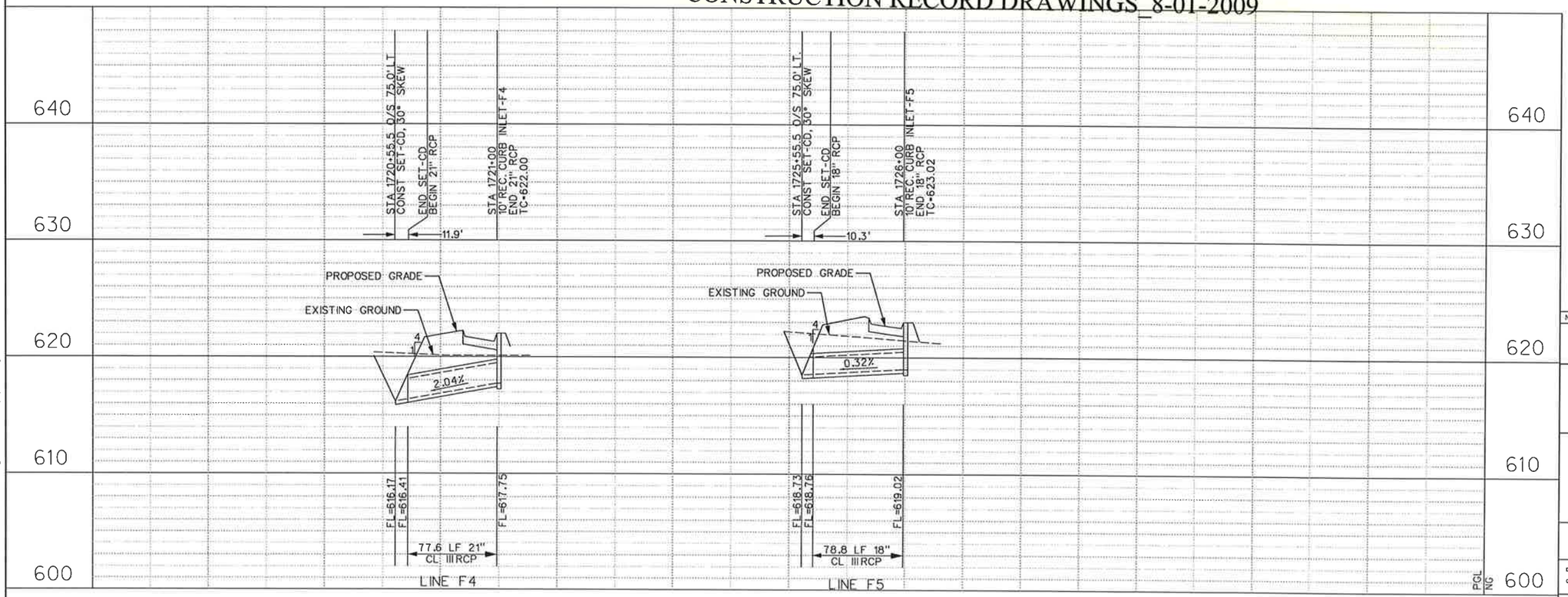

STATE OF TEXAS
DENNIS D. SATRE
71590
REGISTERED PROFESSIONAL ENGINEER
12/28/06

NO.	DATE	REVISION	APPROV.

DALLAS PARKWAY EXTENSION

COLLIN COUNTY

DRAINAGE PLAN – PROFILE
EAST SERVICE ROAD
STA 1720+00 TO STA 1730+00

9

Halff Associates, Inc.
ENGINEERS · ARCHITECTS · SCIENTISTS · PLANNERS · SURVEYORS

DRAWN MDB DATE DEC 2006 DESIGNED DDS DATE
CHECKED DDS DATE SCALE

BOND PROJECT NO. 03-13 SHEET 178 OF 271

P-200612-01

i:\23000s\23819\frisco\dgn\23819sdplp10.dgn

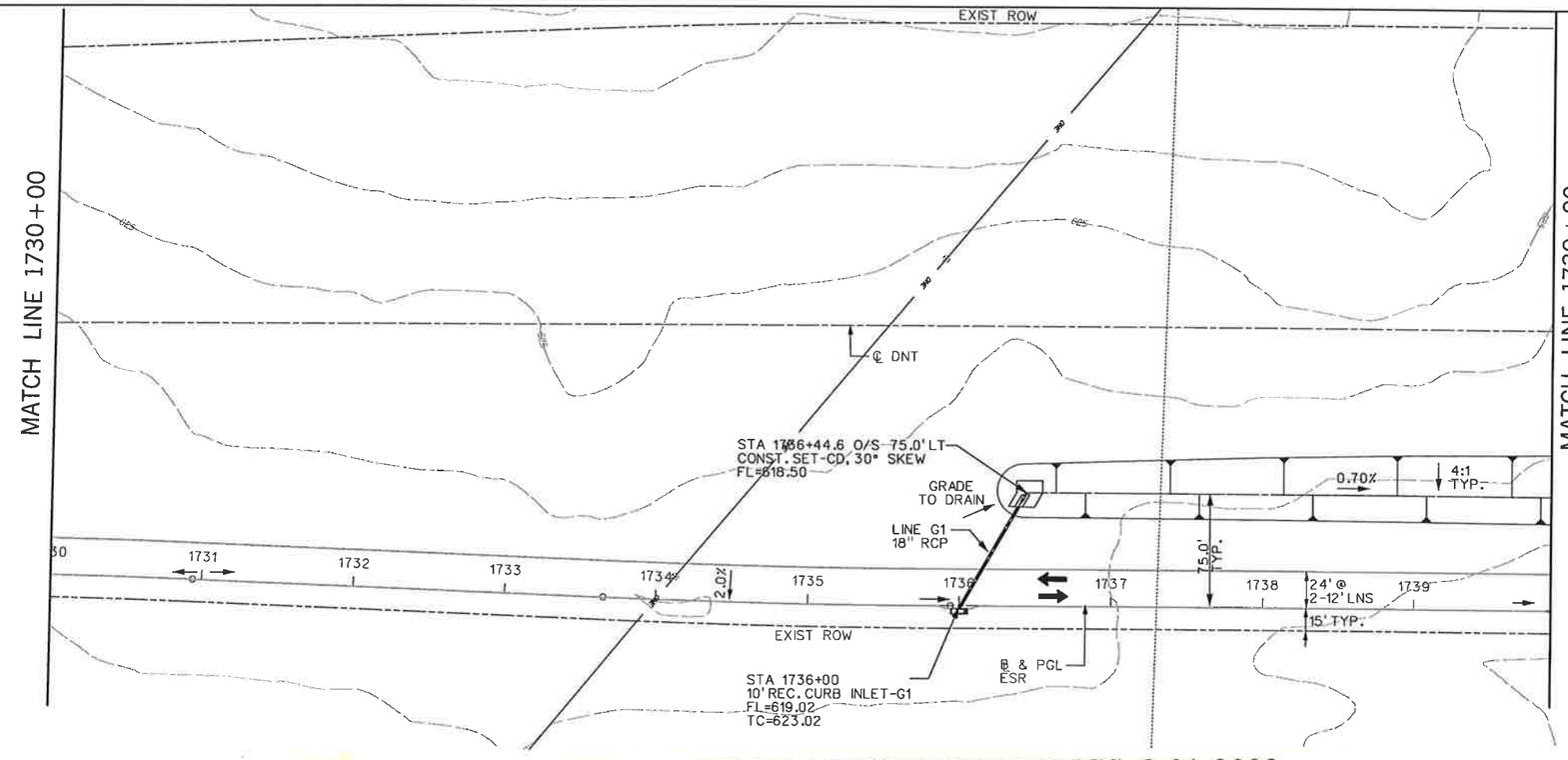

"CONSTRUCTION RECORD DRAWINGS 8-01-2009

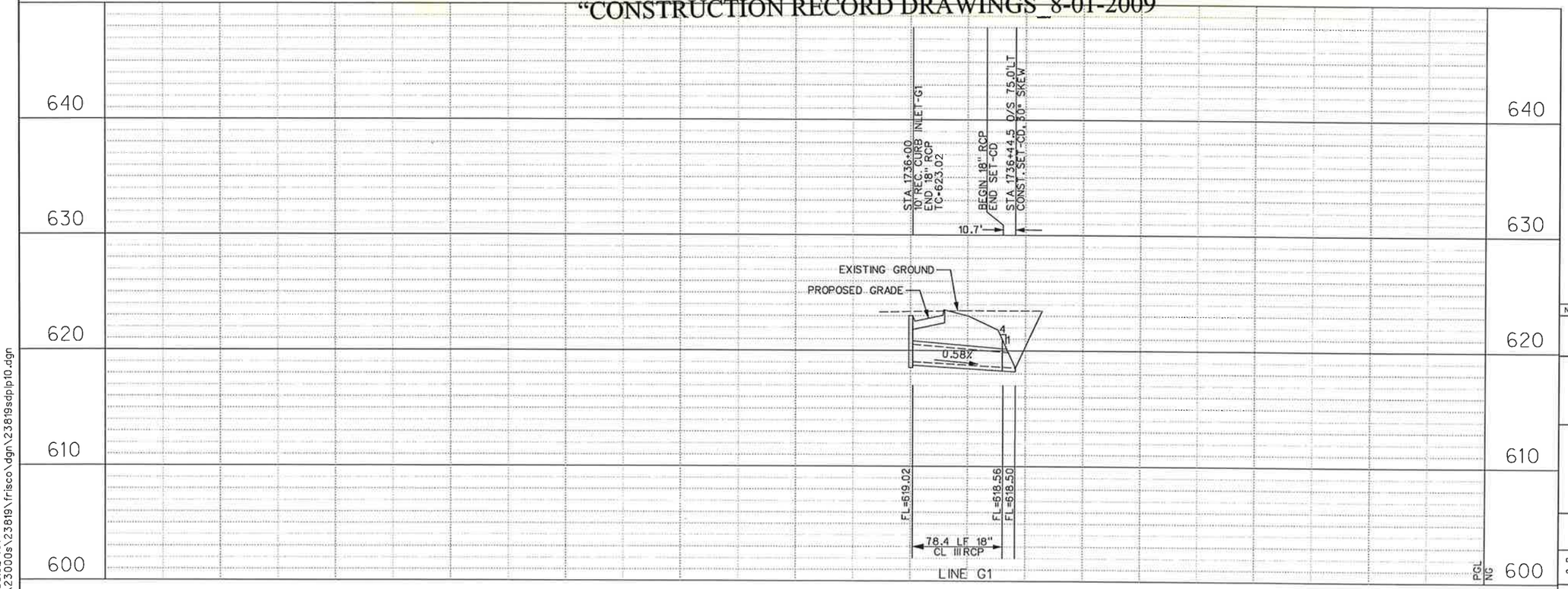

NOTES:

1. EXISTING UTILITIES SHOWN ARE APPROXIMATE. CONTRACTOR SHALL CONFIRM PRESENCE AND LOCATION OF ALL UTILITIES PRIOR TO WORK.

2. SEE PAVING PLANS FOR ROADWAY GEOMETRY.

3. SEE DRAINAGE DETAILS FOR INLET AND S.E.T. LAYOUT DIMENSIONS.

4. SEE CULVERT LAYOUTS FOR ADDITIONAL INFORMATION AND GRADING DETAILS.

0 50 100 150 200
SCALE IN FEET

STATE OF TEXAS
DENNIS D. SATRE
71590
REGISTERED PROFESSIONAL ENGINEER
12/28/06

NO.	DATE	REVISION	APPROV.

DALLAS PARKWAY EXTENSION

COLLIN COUNTY

DRAINAGE PLAN – PROFILE
EAST SERVICE ROAD
STA 1730+00 TO STA 1739+90

10

Halff Associates, Inc.
ENGINEERS · ARCHITECTS · SCIENTISTS · PLANNERS · SURVEYORS

DRAWN MDB DATE DEC 2006 DESIGNED DDS DATE
CHECKED DDS DATE SCALE

BOND PROJECT NO. 03-13 SHEET 179 OF 271

P-200612-01

11:56:32 AM
12/28/2006 11:58:32 AM

i:\23000s\23819\frisco\dgn\23819sdplp11.dgn

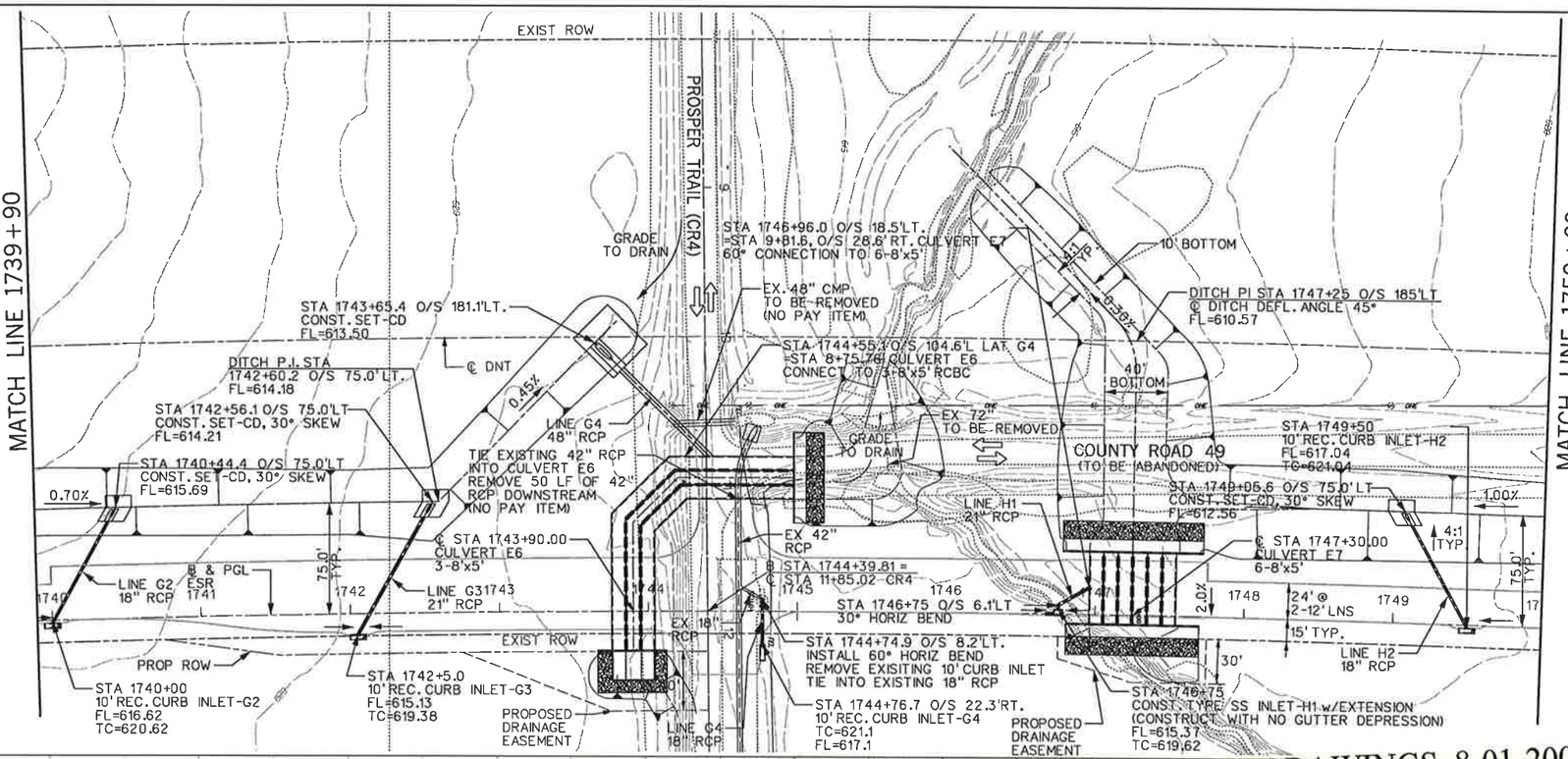

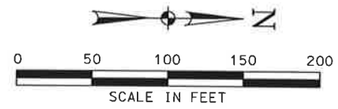

NOTES:

1. EXISTING UTILITIES SHOWN ARE APPROXIMATE. CONTRACTOR SHALL CONFIRM PRESENCE AND LOCATION OF ALL UTILITIES PRIOR TO WORK.

2. SEE PAVING PLANS FOR ROADWAY GEOMETRY.

3. SEE DRAINAGE DETAILS FOR INLET AND S.E.T. LAYOUT DIMENSIONS.

4. SEE CULVERT LAYOUTS FOR ADDITIONAL INFORMATION AND GRADING DETAILS.

5. SEE CULVERT E6 LAYOUT FOR MODIFICATIONS TO EXISTING 42" RCP IN PROSPER TRAIL (CR#4).

"CONSTRUCTION RECORD DRAWINGS_8-01-2009

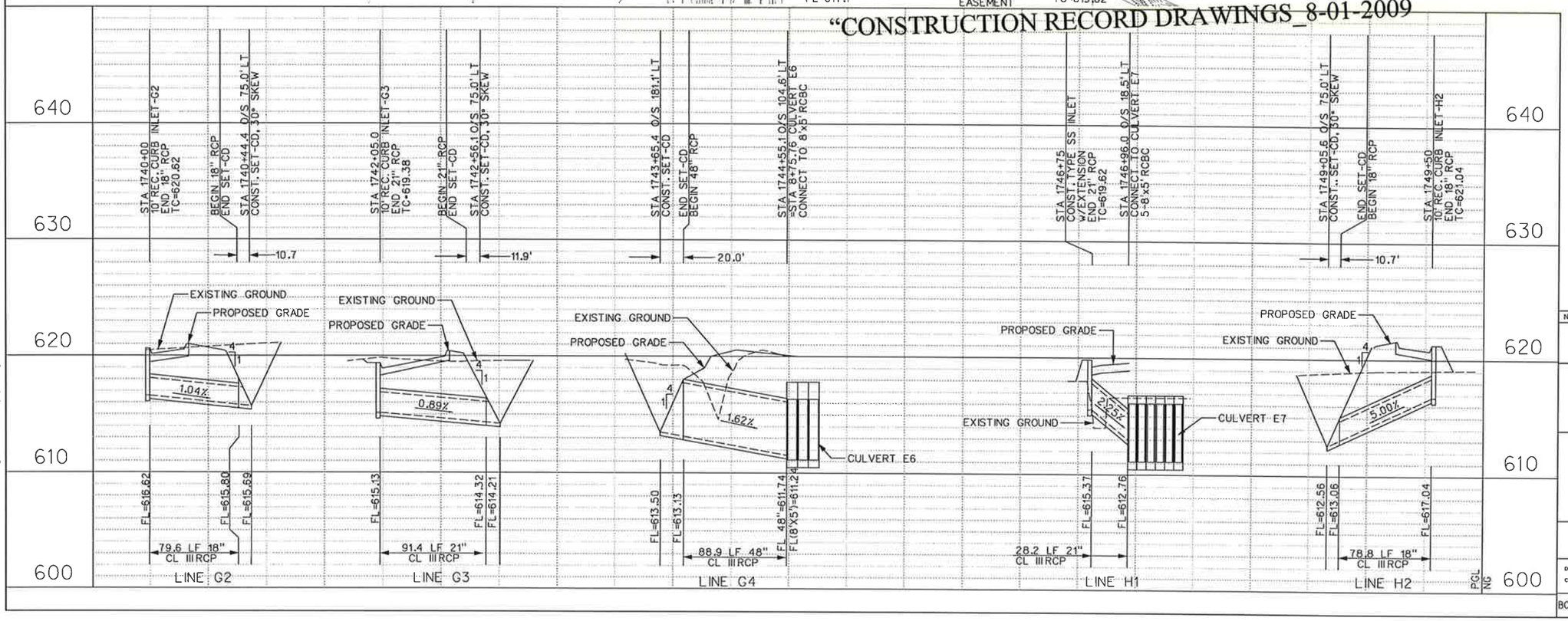

STATE OF TEXAS
DENNIS D. SATRE
71590
REGISTERED PROFESSIONAL ENGINEER
12/28/06

NO.	DATE	REVISION	APPROV.

DALLAS PARKWAY EXTENSION

COLLIN COUNTY

DRAINAGE PLAN – PROFILE
EAST SERVICE ROAD
STA 1739+90 TO STA 1750+00

11

Halff Associates, Inc.
ENGINEERS · ARCHITECTS · SCIENTISTS · PLANNERS · SURVEYORS

DRAWN	MDB	DATE DEC 2006	DESIGNED	DDS	DATE
CHECKED	DDS	DATE	SCALE		

BOND PROJECT NO. 03-13 SHEET 180 OF 271

P-200612-01

11:58:34 AM
i:\23000s\23819\frisco\dgn\23819sdplp11.dgn
12/28/2006 11:58:34 AM

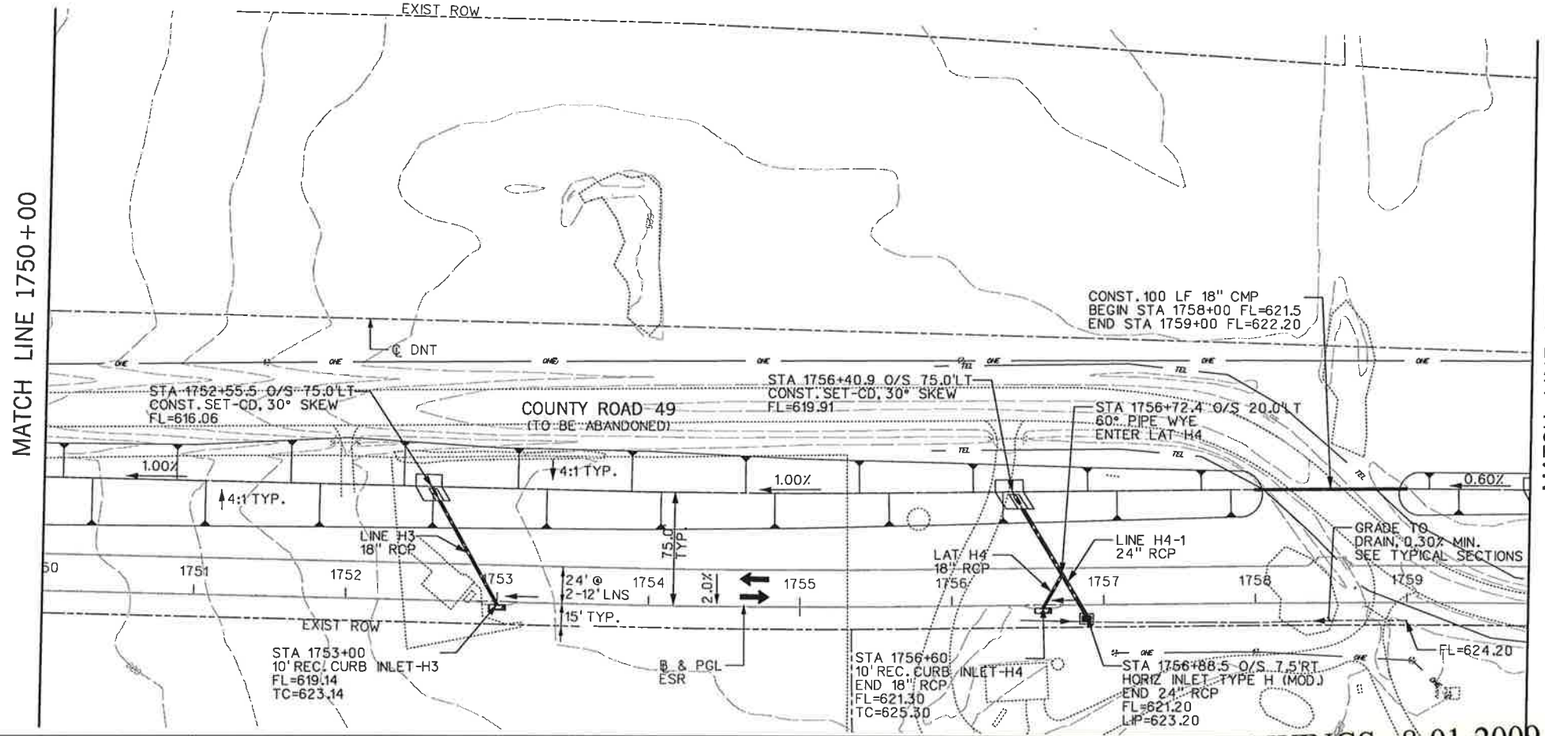

"CONSTRUCTION RECORD DRAWINGS _8-01-2009

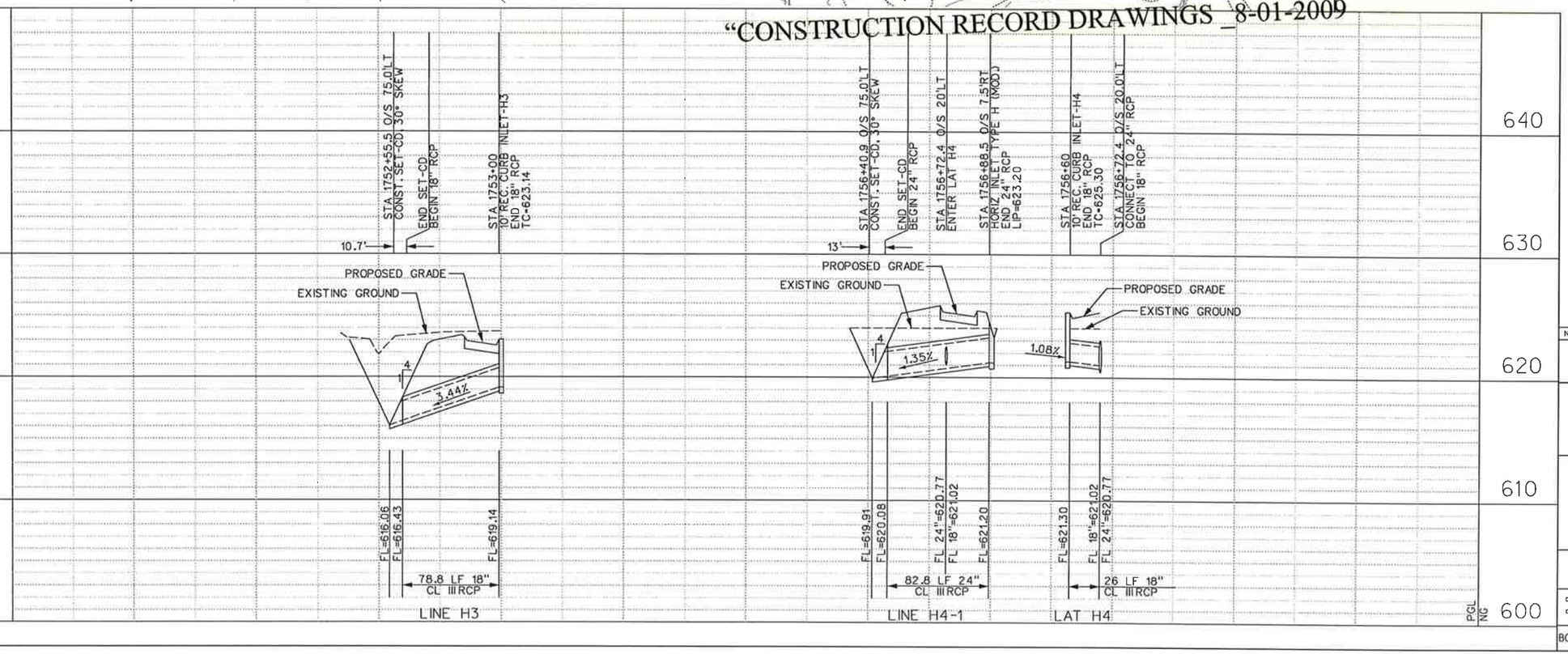

0 50 100 150 200
SCALE IN FEET

NOTES:

1. EXISTING UTILITIES SHOWN ARE APPROXIMATE. CONTRACTOR SHALL CONFIRM PRESENCE AND LOCATION OF ALL UTILITIES PRIOR TO WORK.

2. SEE PAVING PLANS FOR ROADWAY GEOMETRY.

3. SEE DRAINAGE DETAILS FOR INLET AND S.E.T. LAYOUT DIMENSIONS.

4. SEE CULVERT LAYOUTS FOR ADDITIONAL INFORMATION AND GRADING DETAILS.

STATE OF TEXAS
DENNIS D. SATRE
71590
REGISTERED PROFESSIONAL ENGINEER
12/28/06

NO.	DATE	REVISION	APPROV.

DALLAS PARKWAY EXTENSION

COLLIN COUNTY

DRAINAGE PLAN – PROFILE
EAST SERVICE ROAD
STA 1750+00 TO STA 1759+80

12

Halff Associates, Inc.
ENGINEERS · ARCHITECTS · SCIENTISTS · PLANNERS · SURVEYORS

DRAWN MDB DATE DEC 2006 DESIGNED DDS DATE
CHECKED DDS DATE SCALE

BOND PROJECT NO. 03-13 SHEET 181 OF 271

P-200612-01

11:58:37 AM
i:\23000s\23819\frisco\dgn\23819sdplp12.dgn

12/28/2006 11:58:37 AM

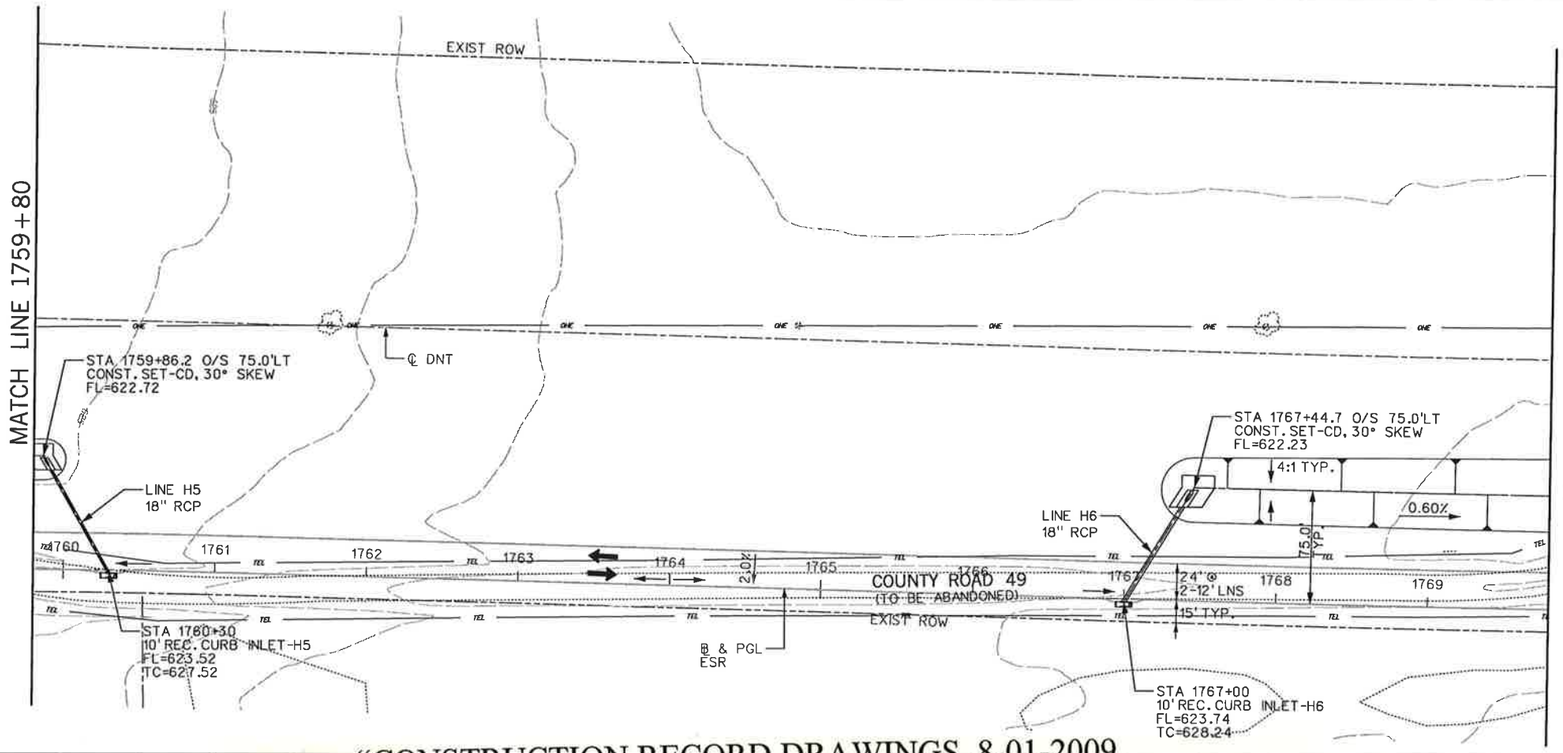

NOTES:

1. EXISTING UTILITIES SHOWN ARE APPROXIMATE. CONTRACTOR SHALL CONFIRM PRESENCE AND LOCATION OF ALL UTILITIES PRIOR TO WORK.

2. SEE PAVING PLANS FOR ROADWAY GEOMETRY.

3. SEE DRAINAGE DETAILS FOR INLET AND S.E.T. LAYOUT DIMENSIONS.

4. SEE CULVERT LAYOUTS FOR ADDITIONAL INFORMATION AND GRADING DETAILS.

"CONSTRUCTION RECORD DRAWINGS_8-01-2009

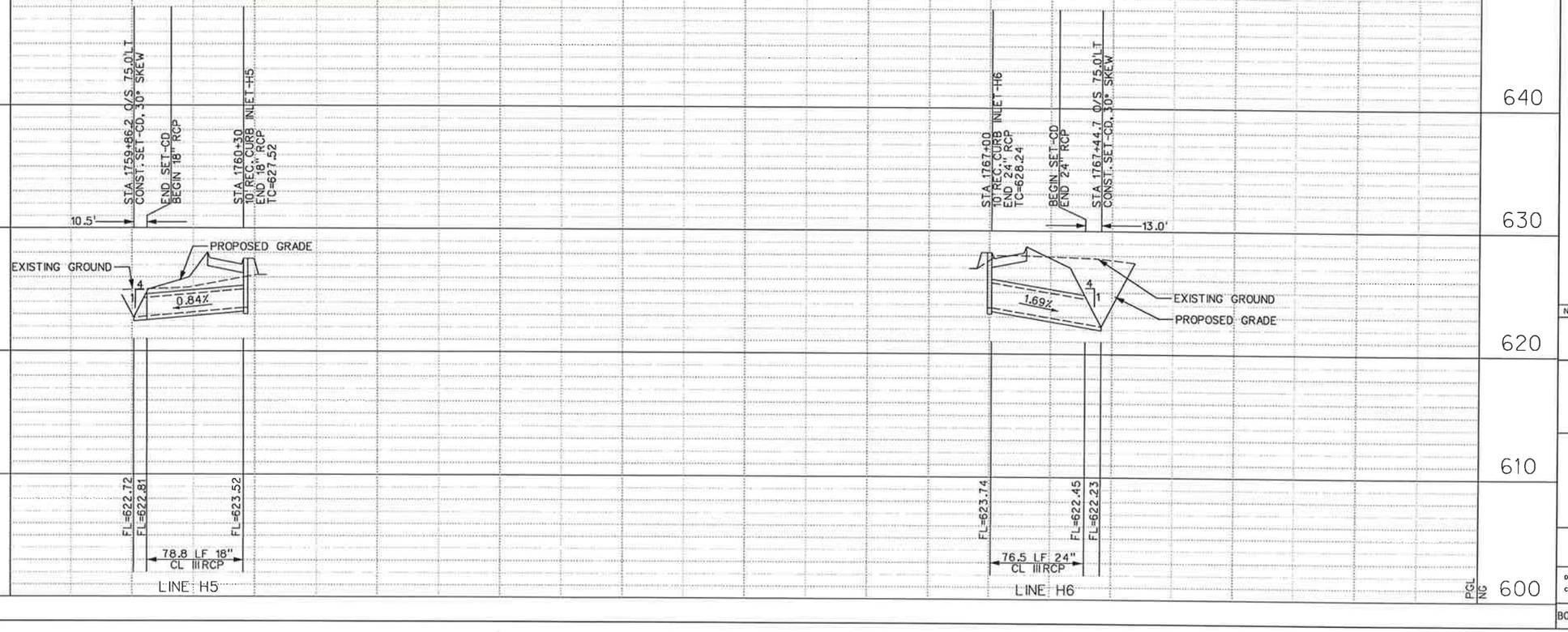

STATE OF TEXAS
DENNIS D. SATRE
71590
REGISTERED PROFESSIONAL ENGINEER
12/28/06

NO.	DATE	REVISION	APPROV.

DALLAS PARKWAY EXTENSION

COLLIN COUNTY

DRAINAGE PLAN – PROFILE
EAST SERVICE ROAD
STA 1759+80 TO STA 1769+80

13

Halff Associates, Inc.
ENGINEERS · ARCHITECTS · SCIENTISTS · PLANNERS · SURVEYORS

DRAWN	MDB	DATE	DEC 2006	DESIGNED	DDS	DATE	
CHECKED	DDS	DATE		SCALE			

BOND PROJECT NO. 03-13 SHEET 182 OF 271 33

P-200612-01

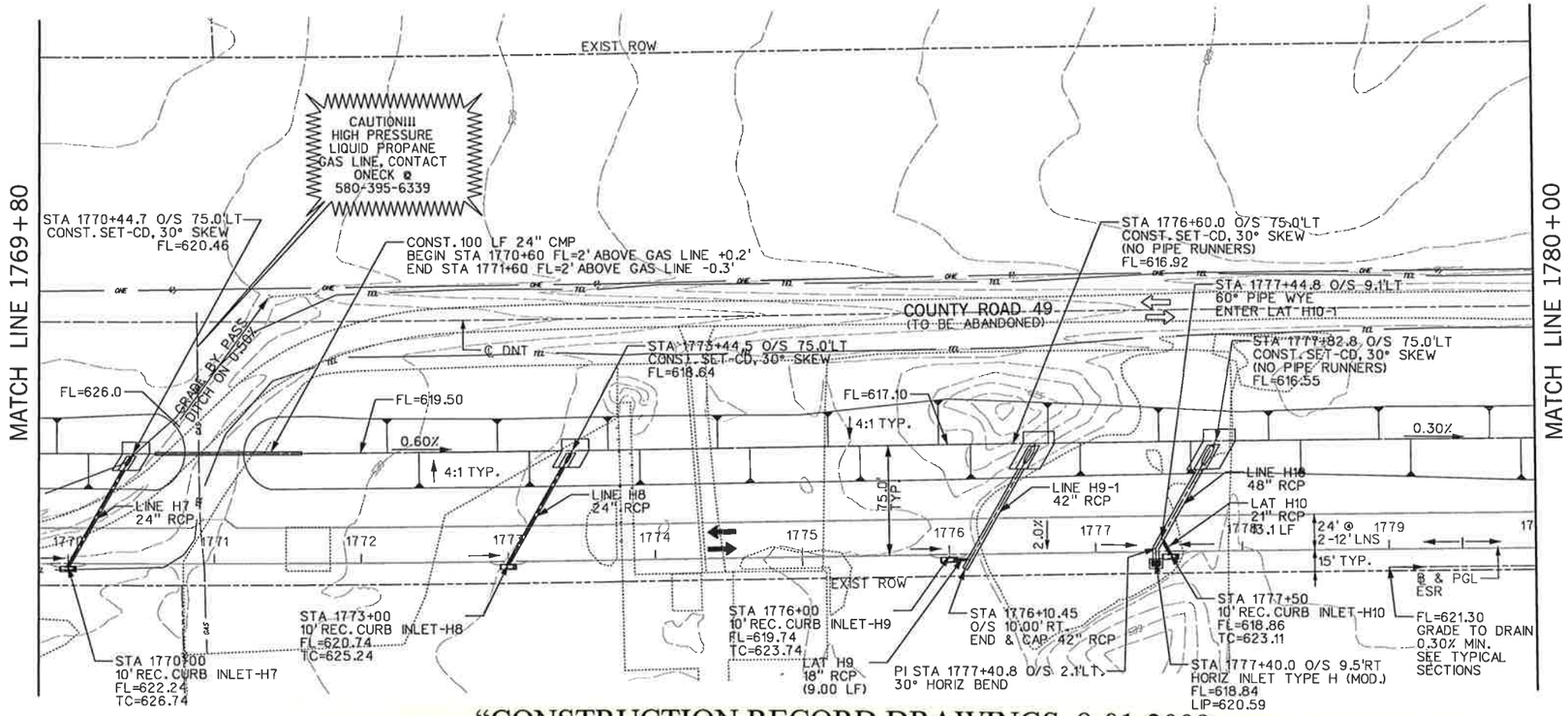

"CONSTRUCTION RECORD DRAWINGS_8-01-2009

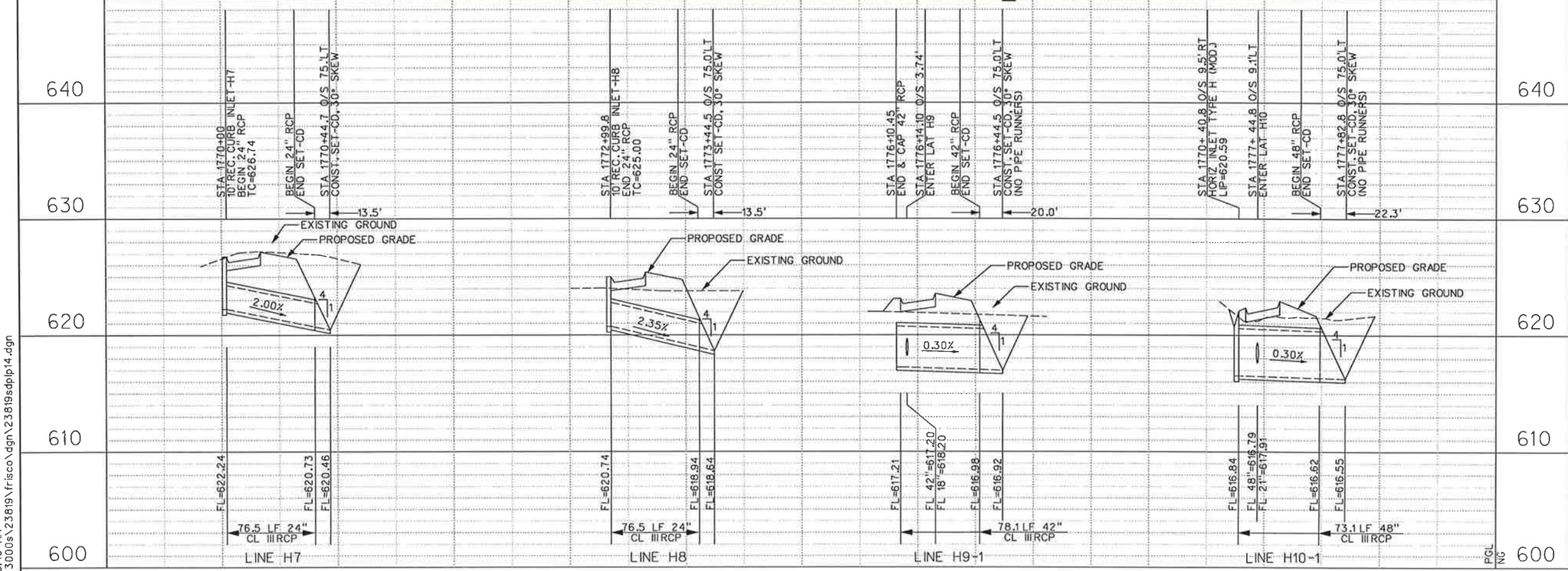

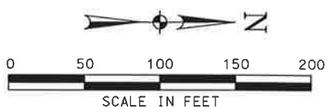

NOTES:

1. EXISTING UTILITIES SHOWN ARE APPROXIMATE. CONTRACTOR SHALL CONFIRM PRESENCE AND LOCATION OF ALL UTILITIES PRIOR TO WORK.

2. SEE PAVING PLANS FOR ROADWAY GEOMETRY.

3. SEE DRAINAGE DETAILS FOR INLET AND S.E.T. LAYOUT DIMENSIONS.

4. SEE CULVERT LAYOUTS FOR ADDITIONAL INFORMATION AND GRADING DETAILS.

STATE OF TEXAS
DENNIS D. SATRE
71590
REGISTERED PROFESSIONAL ENGINEER
Dennis D. Satre 12/28/06

NO.	DATE	REVISION	APPROV.

DALLAS PARKWAY EXTENSION

COLLIN COUNTY

DRAINAGE PLAN – PROFILE
EAST SERVICE ROAD
STA 1769+80 TO STA 1780+00

14

Halff Associates, Inc.
ENGINEERS · ARCHITECTS · SCIENTISTS · PLANNERS · SURVEYORS

DRAWN	MDB	DATE	DEC 2006	DESIGNED	DDS	DATE	
CHECKED	DDS	DATE		SCALE			

BOND PROJECT NO. 03-13 SHEET 183 OF 271

P-200612-01

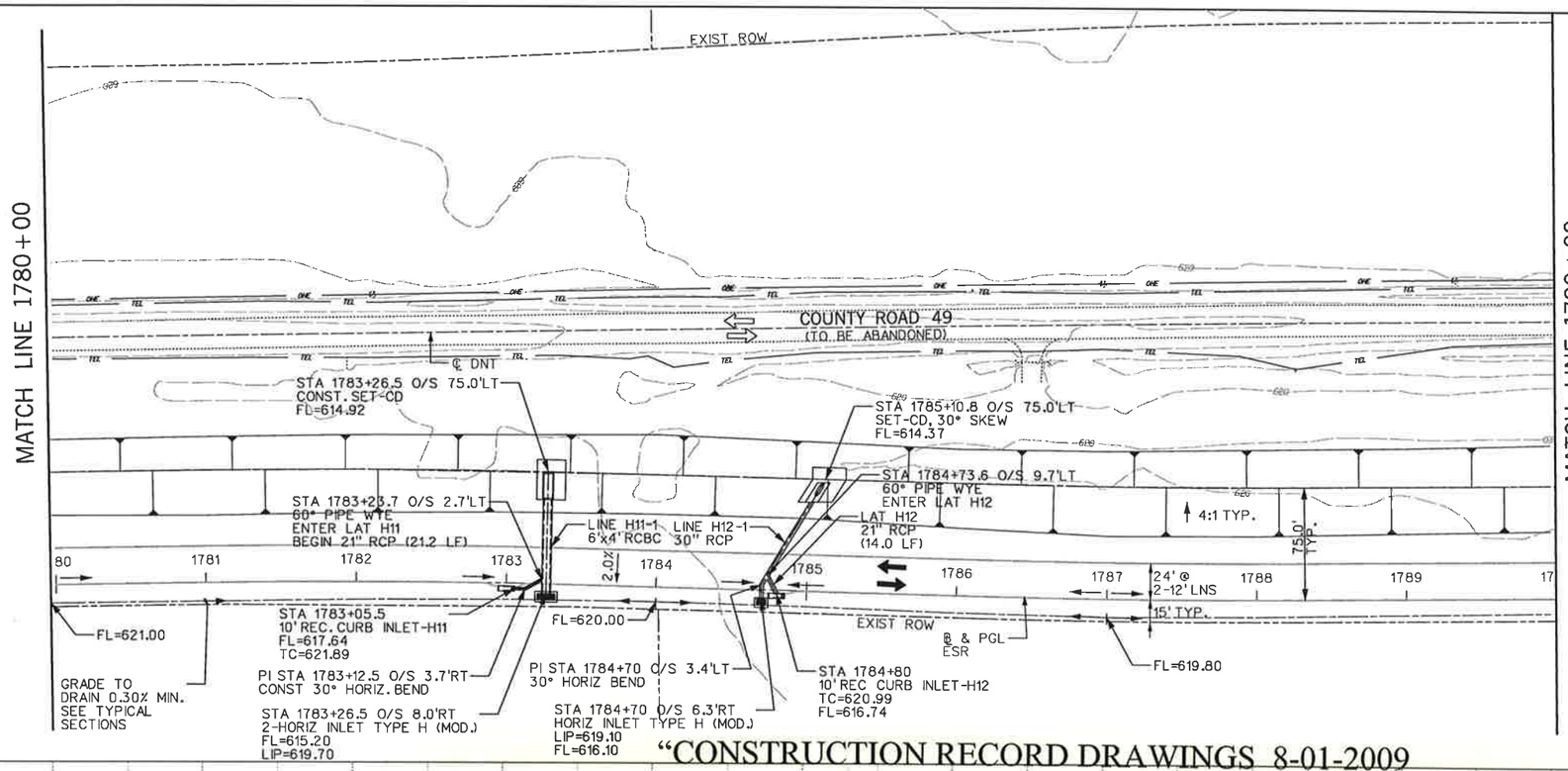

"CONSTRUCTION RECORD DRAWINGS_8-01-2009

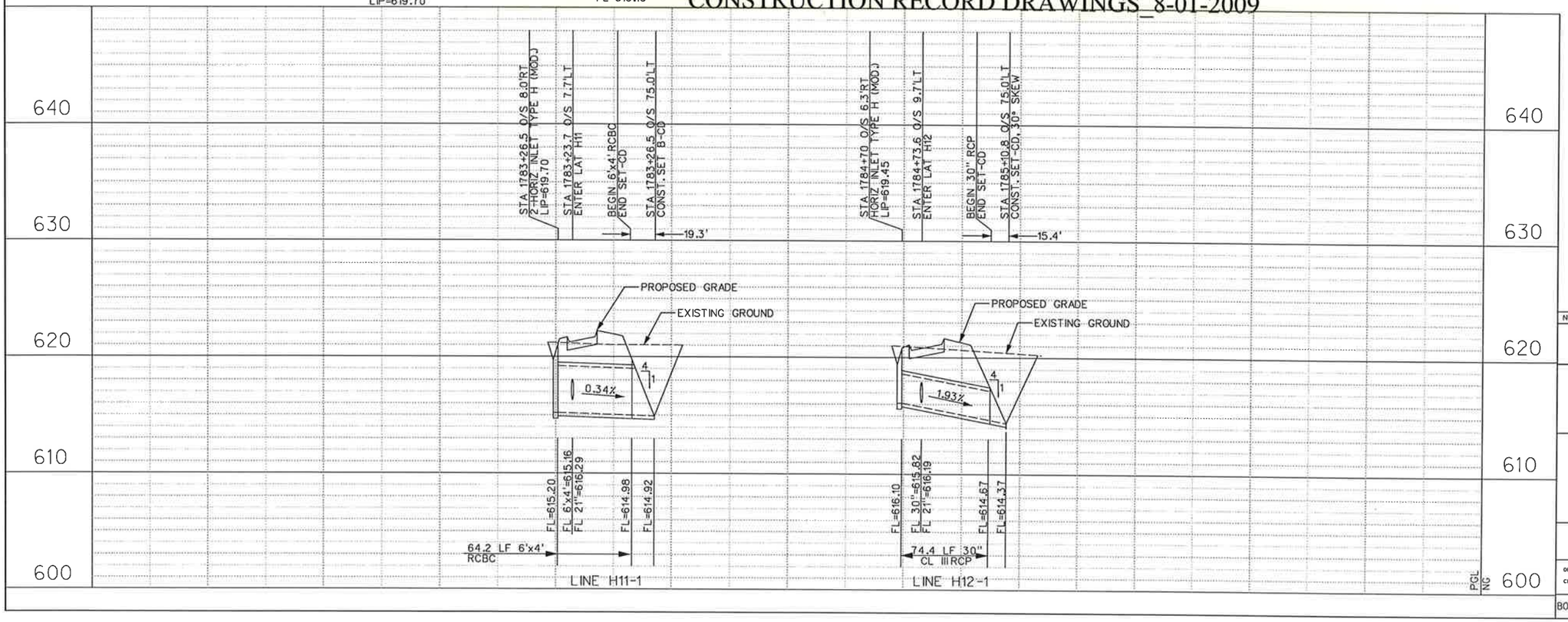

NOTES:

1. EXISTING UTILITIES SHOWN ARE APPROXIMATE. CONTRACTOR SHALL CONFIRM PRESENCE AND LOCATION OF ALL UTILITIES PRIOR TO WORK.

2. SEE PAVING PLANS FOR ROADWAY GEOMETRY.

3. SEE DRAINAGE DETAILS FOR INLET AND S.E.T. LAYOUT DIMENSIONS.

4. SEE CULVERT LAYOUTS FOR ADDITIONAL INFORMATION AND GRADING DETAILS.

0 50 100 150 200
SCALE IN FEET

STATE OF TEXAS
DENNIS D. SATRE
71590
REGISTERED PROFESSIONAL ENGINEER
12/28/06

NO.	DATE	REVISION	APPROV.

DALLAS PARKWAY EXTENSION

COLLIN COUNTY

DRAINAGE PLAN – PROFILE
EAST SERVICE ROAD
STA 1780+00 TO STA 1790+00

15

Halff Associates, Inc.
ENGINEERS · ARCHITECTS · SCIENTISTS · PLANNERS · SURVEYORS

DRAWN MDB DATE DEC 2006 DESIGNED DDS DATE
CHECKED DDS DATE SCALE

BOND PROJECT NO. 03-13 SHEET 184 OF 271

P-200612-01

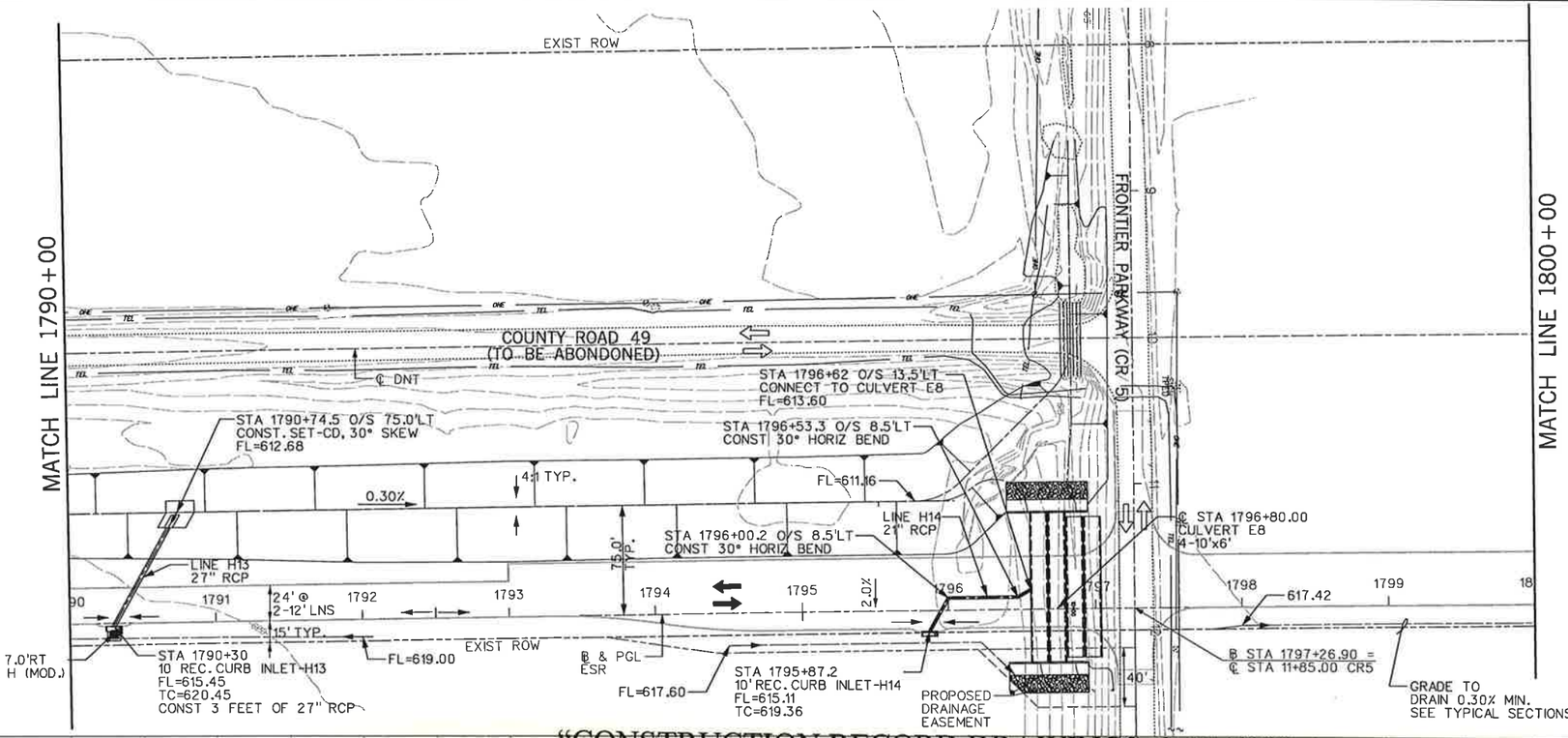

"CONSTRUCTION RECORD DRAWINGS_8-01-2009

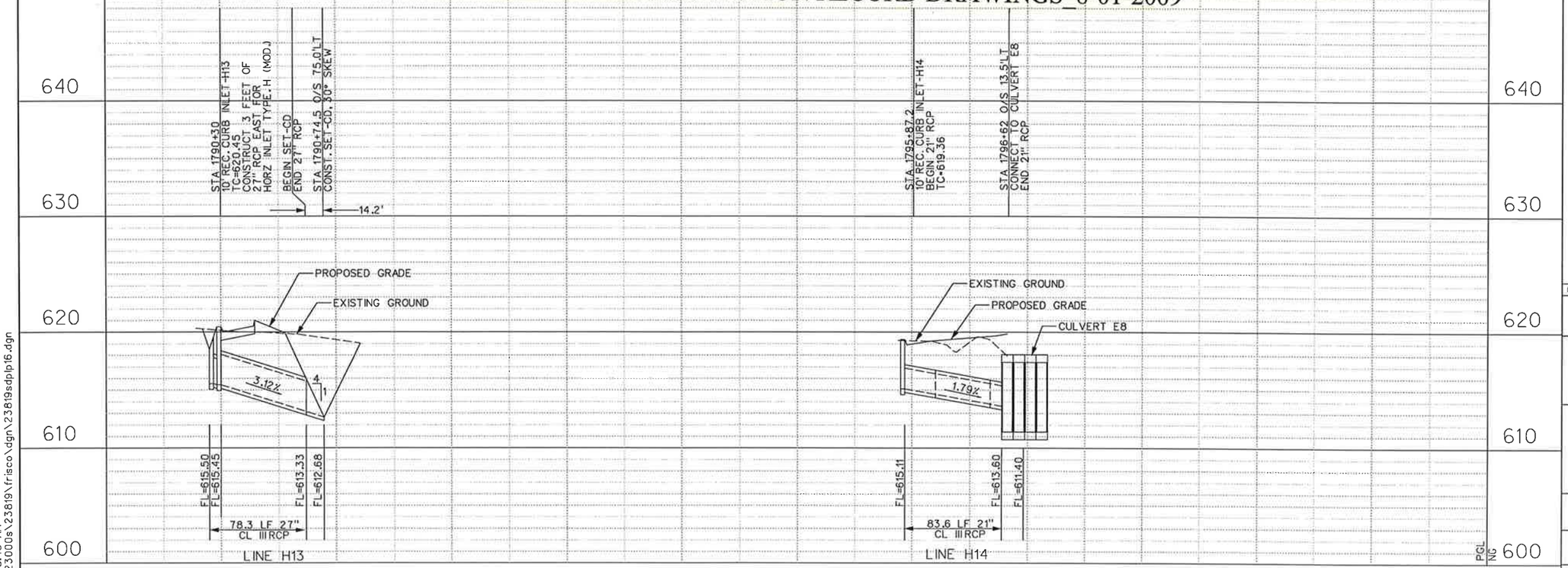

NOTES:

1. EXISTING UTILITIES SHOWN ARE APPROXIMATE. CONTRACTOR SHALL CONFIRM PRESENCE AND LOCATION OF ALL UTILITIES PRIOR TO WORK.

2. SEE PAVING PLANS FOR ROADWAY GEOMETRY.

3. SEE DRAINAGE DETAILS FOR INLET AND S.E.T. LAYOUT DIMENSIONS.

4. SEE CULVERT LAYOUTS FOR ADDITIONAL INFORMATION AND GRADING DETAILS.

0 50 100 150 200
SCALE IN FEET

STATE OF TEXAS
DENNIS D. SATRE
71590
REGISTERED PROFESSIONAL ENGINEER
Dennis D. Satre 12/28/06

NO.	DATE	REVISION	APPROV.

DALLAS PARKWAY EXTENSION

COLLIN COUNTY

DRAINAGE PLAN – PROFILE
EAST SERVICE ROAD
STA 1790+00 TO STA 1800+00

16

Halff Associates, Inc.
ENGINEERS · ARCHITECTS · SCIENTISTS · PLANNERS · SURVEYORS

DRAWN MDB DATE DEC 2006 | DESIGNED DDS DATE
CHECKED DDS DATE | SCALE

BOND PROJECT NO. 03-13 SHEET 186 OF 271

P-200612-01

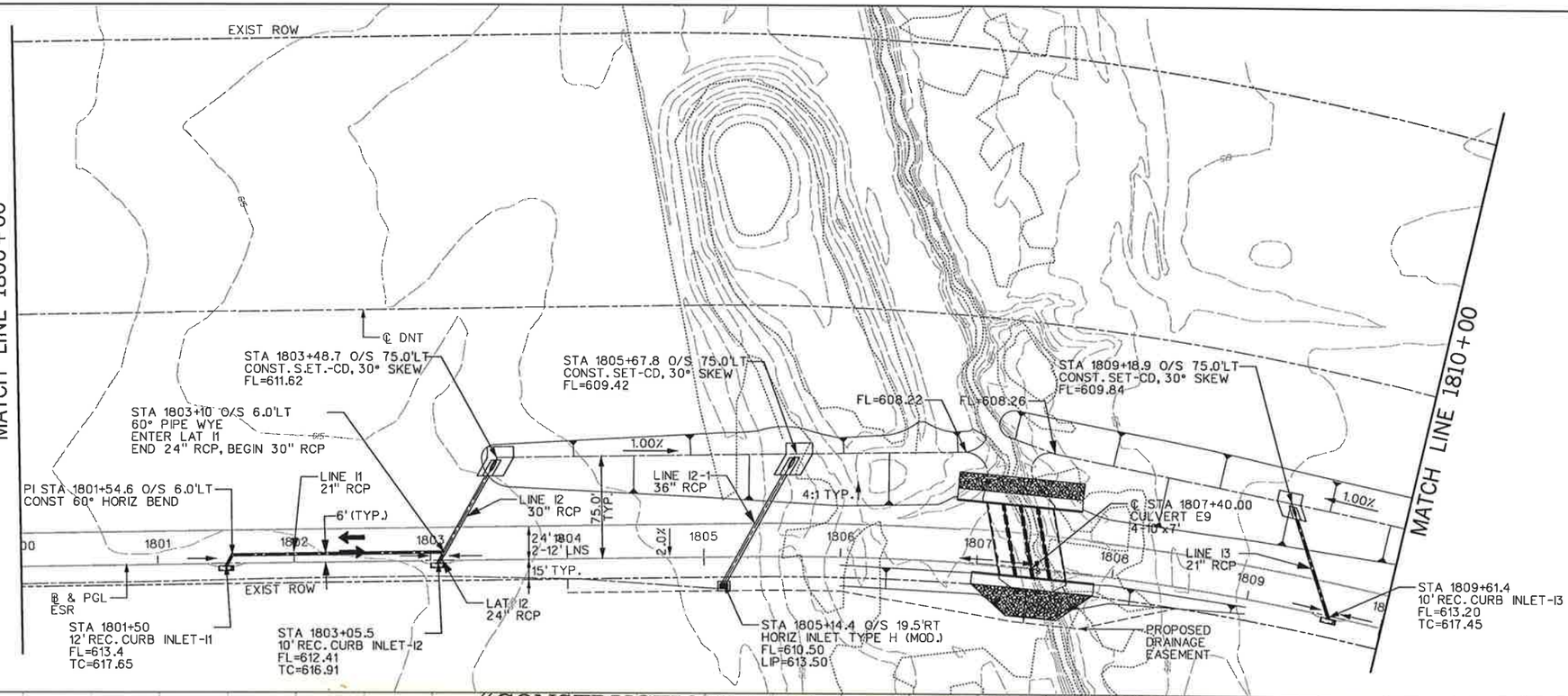

0 50 100 150 200
SCALE IN FEET

NOTES:

1. EXISTING UTILITIES SHOWN ARE APPROXIMATE. CONTRACTOR SHALL CONFIRM PRESENCE AND LOCATION OF ALL UTILITIES PRIOR TO WORK.

2. SEE PAVING PLANS FOR ROADWAY GEOMETRY.

3. SEE DRAINAGE DETAILS FOR INLET AND S.E.T. LAYOUT DIMENSIONS.

4. SEE CULVERT LAYOUTS FOR ADDITIONAL INFORMATION AND GRADING DETAILS.

"CONSTRUCTION RECORD DRAWINGS 8-01-2009

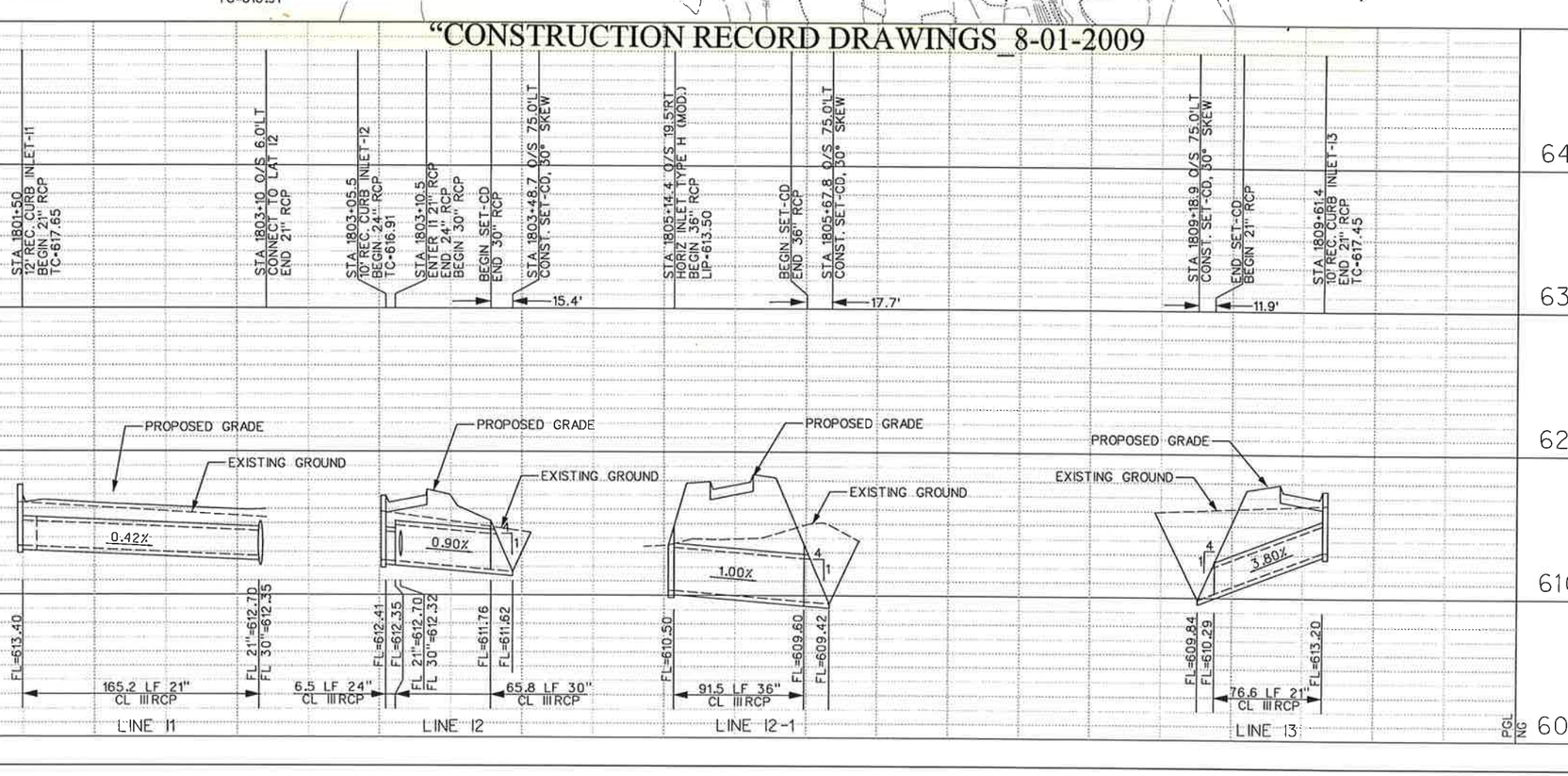

STATE OF TEXAS
DENNIS D. SATRE
71590
PROFESSIONAL ENGINEER
REGISTERED
12/28/06

NO.	DATE	REVISION	APPROV.

DALLAS PARKWAY EXTENSION

COLLIN COUNTY

DRAINAGE PLAN – PROFILE
EAST SERVICE ROAD
STA 1800+00 TO STA 1810+00

17

Halff Associates, Inc.
ENGINEERS · ARCHITECTS · SCIENTISTS · PLANNERS · SURVEYORS

DRAWN MDB DATE DEC 2006 | DESIGNED DDS DATE
CHECKED DDS DATE | SCALE

BOND PROJECT NO. 03-13 SHEET 186 OF 271

P-200612-01

11:58:51 AM
i:\23000s\23819\frisco\dgn\23819sdp\p17.dgn

12/28/2006 11:58:51 AM

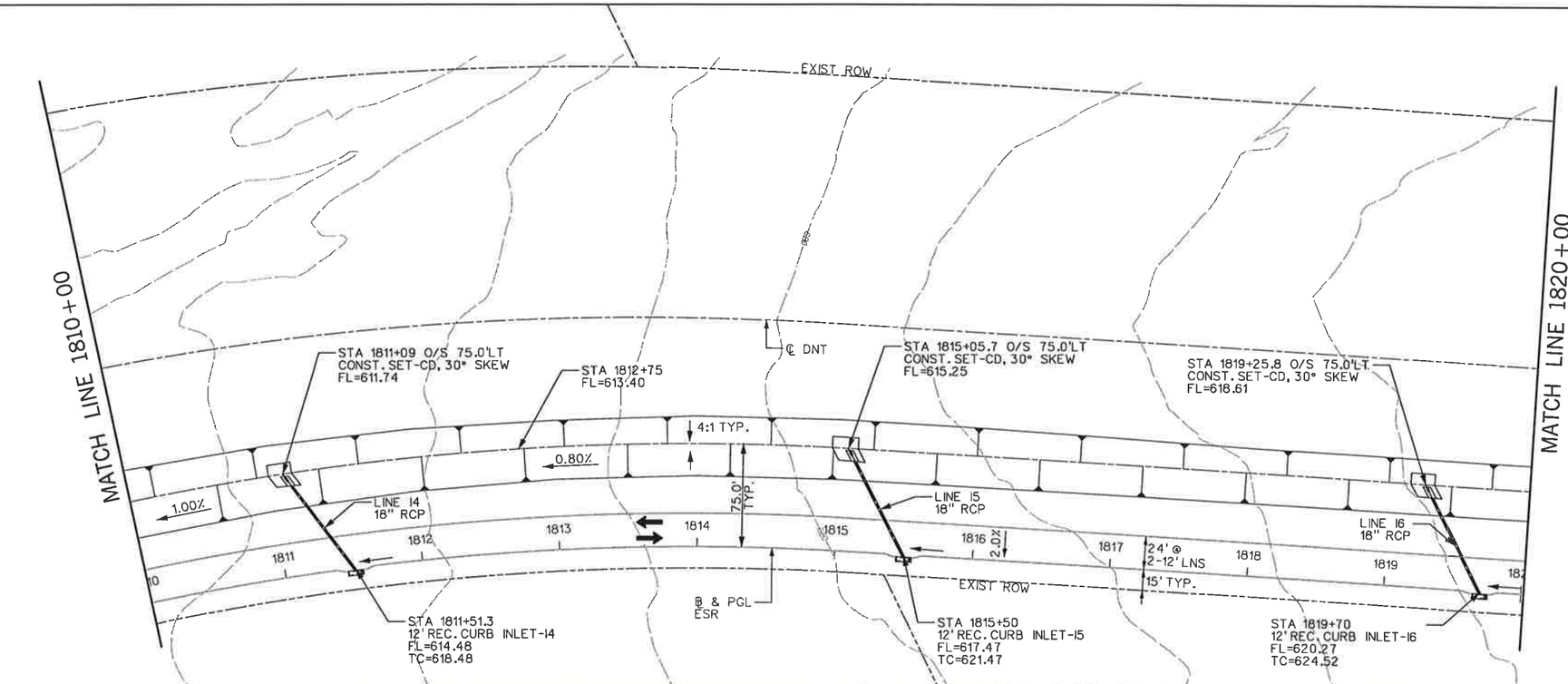

"CONSTRUCTION RECORD DRAWINGS 8-01-2009

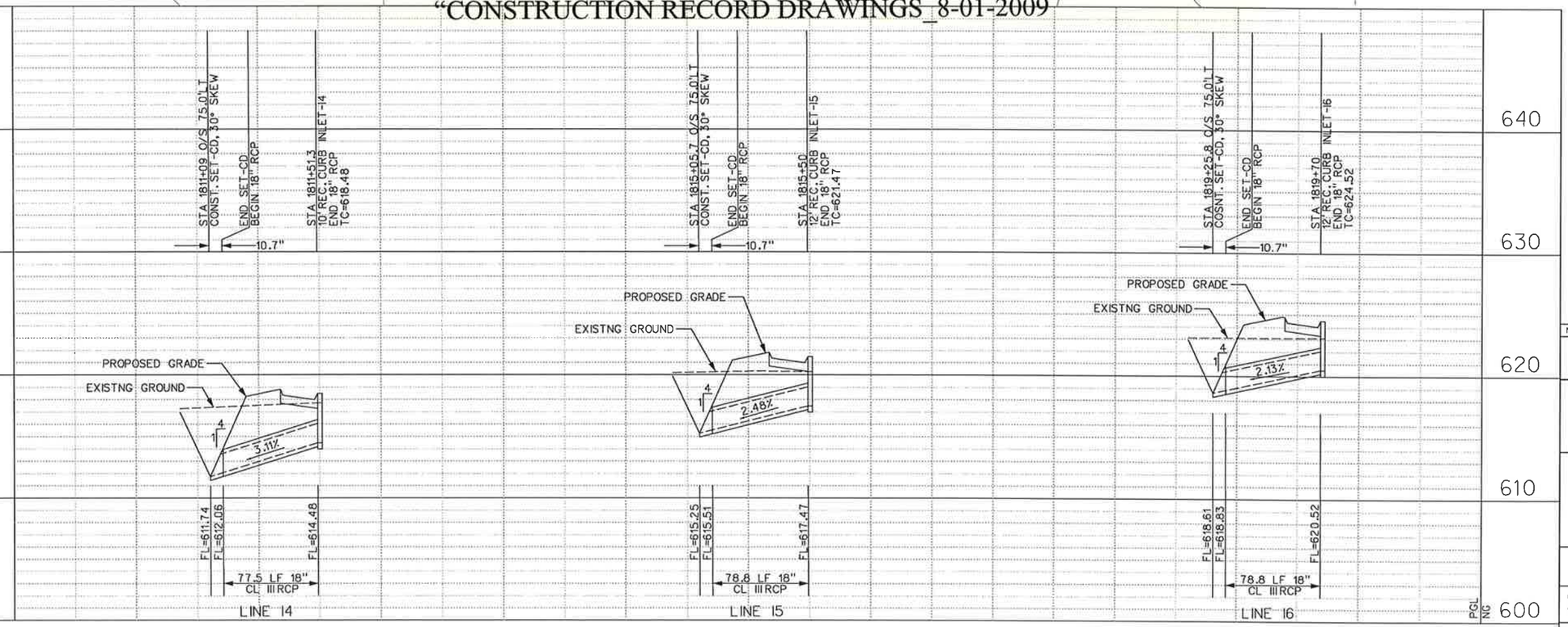

0 50 100 150 200
SCALE IN FEET

NOTES:

1. EXISTING UTILITIES SHOWN ARE APPROXIMATE. CONTRACTOR SHALL CONFIRM PRESENCE AND LOCATION OF ALL UTILITIES PRIOR TO WORK.

2. SEE PAVING PLANS FOR ROADWAY GEOMETRY.

3. SEE DRAINAGE DETAILS FOR INLET AND S.E.T. LAYOUT DIMENSIONS.

4. SEE CULVERT LAYOUTS FOR ADDITIONAL INFORMATION AND GRADING DETAILS.

STATE OF TEXAS
DENNIS D. SATRE
71590
REGISTERED
PROFESSIONAL ENGINEER
12/28/06

NO.	DATE	REVISION	APPROV.

DALLAS PARKWAY EXTENSION

COLLIN COUNTY

DRAINAGE PLAN – PROFILE
EAST SERVICE ROAD
STA 1810+00 TO STA 1820+00

18

Halff Associates, Inc.
ENGINEERS · ARCHITECTS · SCIENTISTS · PLANNERS · SURVEYORS

DRAWN MDB DATE DEC 2006 DESIGNED DDS DATE
CHECKED DDS DATE SCALE

BOND PROJECT NO. 03-13 SHEET 187 OF 271

P-200612-01

11:58:53 AM
i:\23000s\23819\frisco\dgn\23819sdplp18.dgn

12/28/2006 11:58:53 AM

i:\23000s\23819\frisco\dgn\23819sdplp19.dgn

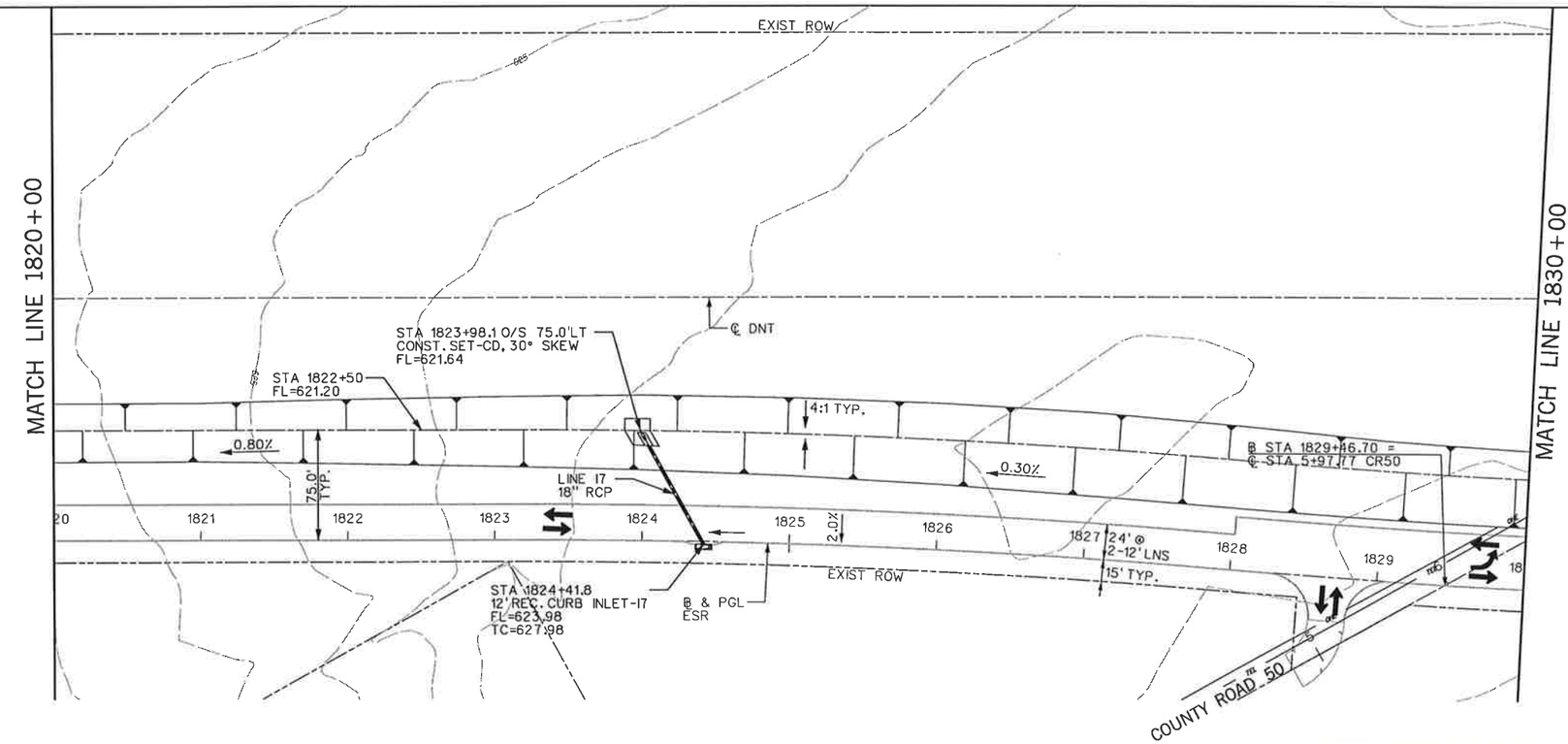

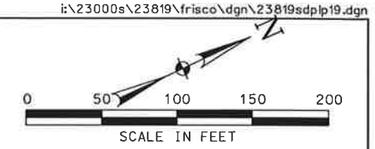

NOTES:

1. EXISTING UTILITIES SHOWN ARE APPROXIMATE. CONTRACTOR SHALL CONFIRM PRESENCE AND LOCATION OF ALL UTILITIES PRIOR TO WORK.

2. SEE PAVING PLANS FOR ROADWAY GEOMETRY.

3. SEE DRAINAGE DETAILS FOR INLET AND S.E.T. LAYOUT DIMENSIONS.

4. SEE CULVERT LAYOUTS FOR ADDITIONAL INFORMATION AND GRADING DETAILS.

"CONSTRUCTION RECORD DRAWINGS_8-01-2009

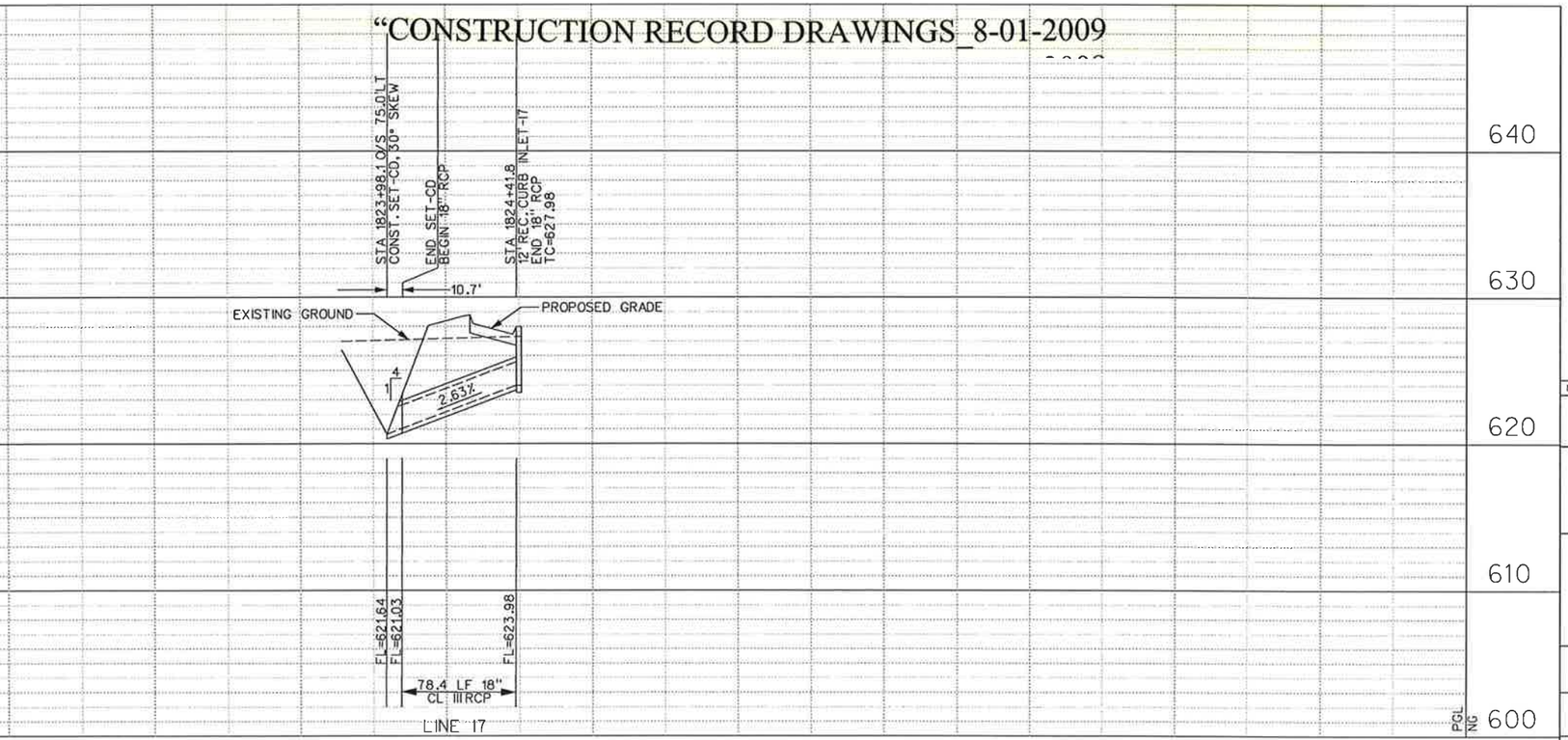

NO.	DATE	REVISION	APPROV.

DALLAS PARKWAY EXTENSION

COLLIN COUNTY

DRAINAGE PLAN – PROFILE
EAST SERVICE ROAD
STA 1820+00 TO STA 1830+00

19

Halff Associates, Inc.
ENGINEERS · ARCHITECTS · SCIENTISTS · PLANNERS · SURVEYORS

DRAWN MDB DATE DEC 2006 DESIGNED DDS DATE
CHECKED DDS DATE SCALE

BOND PROJECT NO. 03-13 SHEET 188 OF 271

P-200612-01

11:58:56 AM
i:\23000s\23819\frisco\dgn\23819sdplp19.dgn
12/28/2006 11:58:56 AM

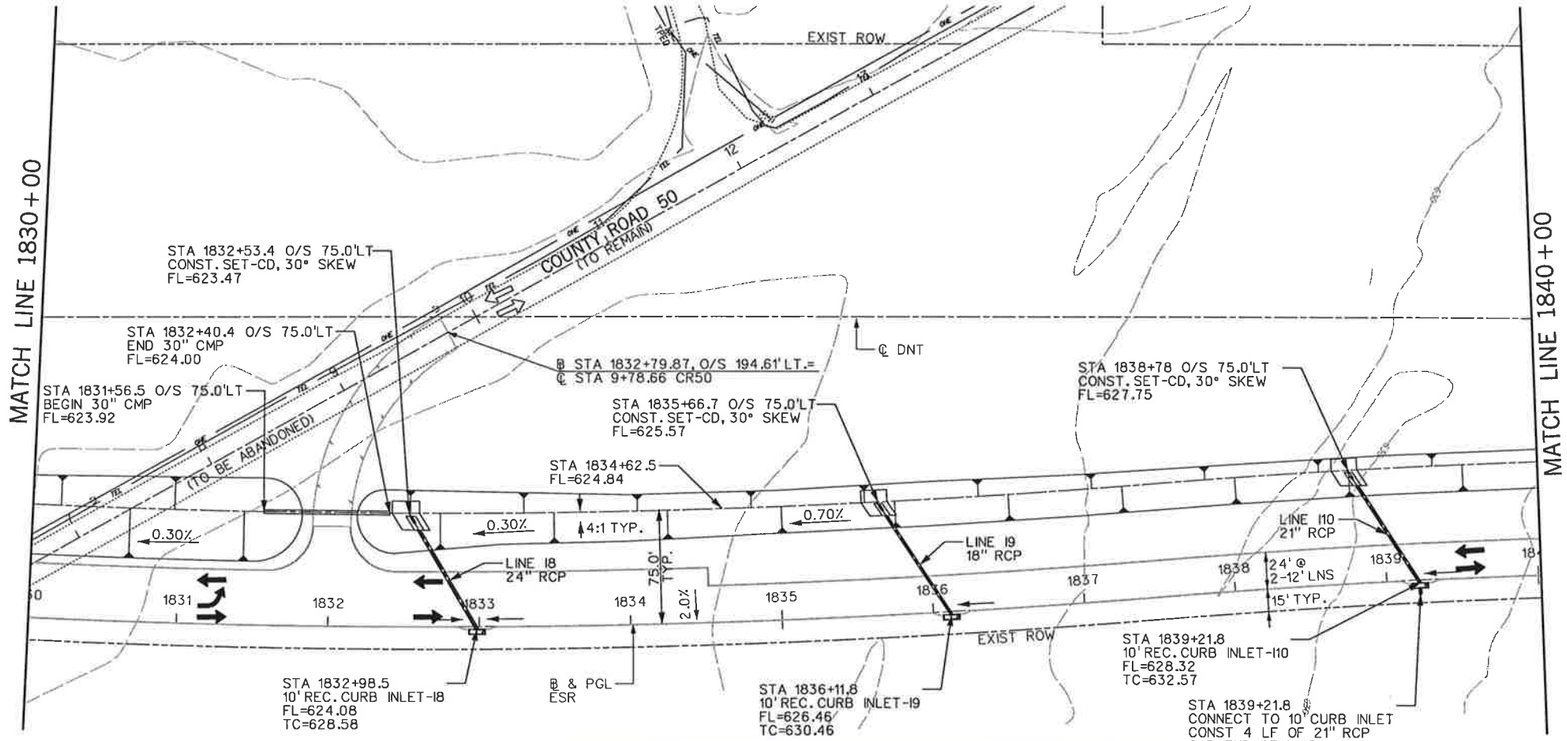

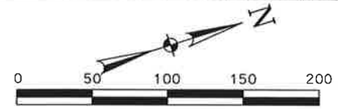

NOTES:

1. EXISTING UTILITIES SHOWN ARE APPROXIMATE. CONTRACTOR SHALL CONFIRM PRESENCE AND LOCATION OF ALL UTILITIES PRIOR TO WORK.

2. SEE PAVING PLANS FOR ROADWAY GEOMETRY.

3. SEE DRAINAGE DETAILS FOR INLET AND S.E.T. LAYOUT DIMENSIONS.

4. SEE CULVERT LAYOUTS FOR ADDITIONAL INFORMATION AND GRADING DETAILS.

"CONSTRUCTION RECORD DRAWINGS_8-01-2009

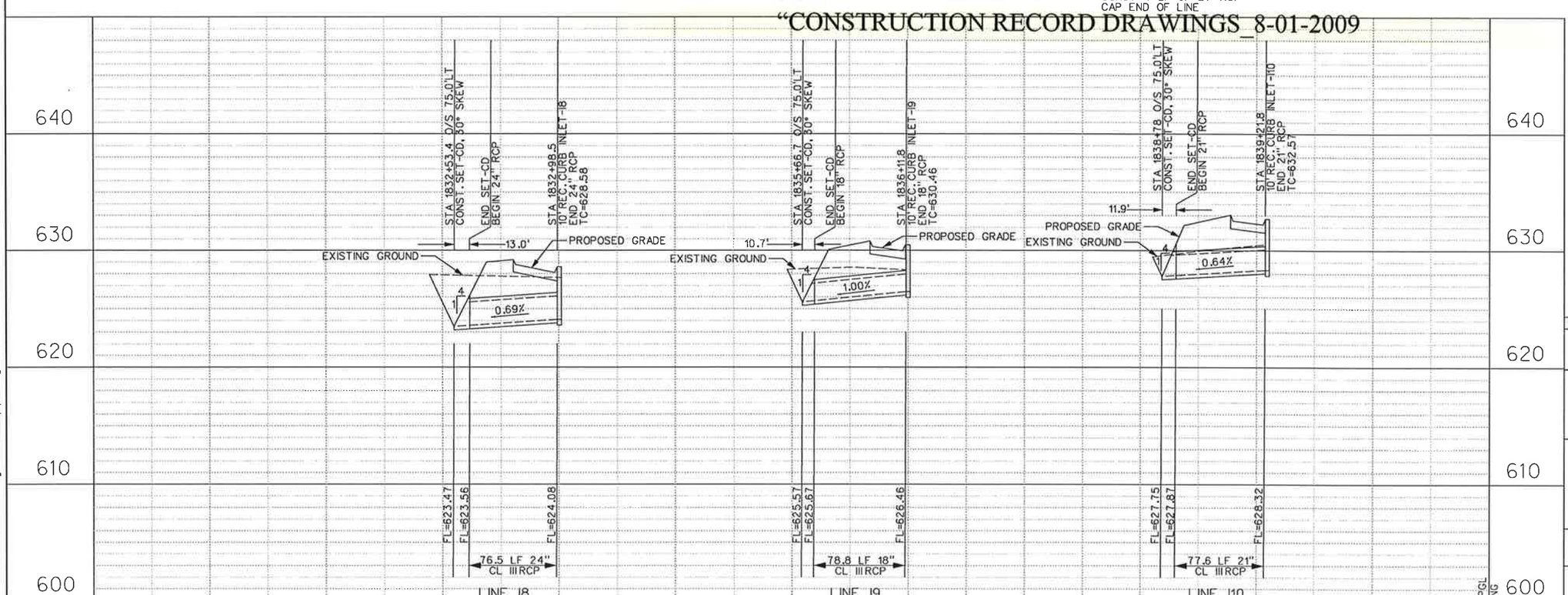

NO.	DATE	REVISION	APPROV.

DALLAS PARKWAY EXTENSION

COLLIN COUNTY

DRAINAGE PLAN – PROFILE
EAST SERVICE ROAD
STA 1830+00 TO STA 1840+00

20

Halff Associates, Inc.
ENGINEERS · ARCHITECTS · SCIENTISTS · PLANNERS · SURVEYORS

DRAWN MDB DATE DEC 2006 DESIGNED DDS DATE
CHECKED DDS DATE SCALE

BOND PROJECT NO. 03-13 SHEET 189 OF 271

P-200612-01

i:\23000s\23819\frisco\DGN\23819SDPLP21.dgn

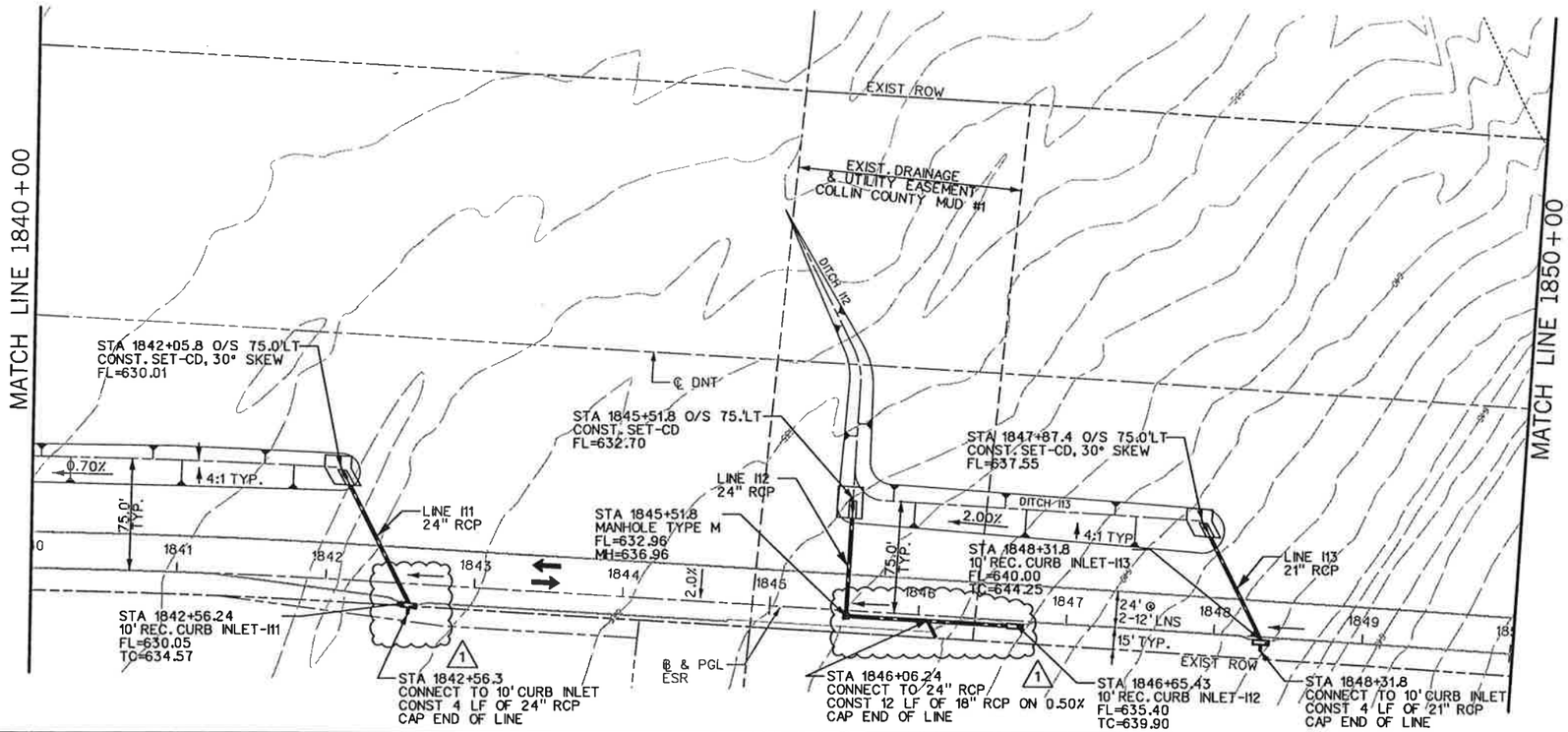

NOTES:

1. EXISTING UTILITIES SHOWN ARE APPROXIMATE. CONTRACTOR SHALL CONFIRM PRESENCE AND LOCATION OF ALL UTILITIES PRIOR TO WORK.

2. SEE PAVING PLANS FOR ROADWAY GEOMETRY.

3. SEE DRAINAGE DETAILS FOR INLET AND S.E.T. LAYOUT DIMENSIONS.

4. SEE CULVERT LAYOUTS FOR ADDITIONAL INFORMATION AND GRADING DETAILS.

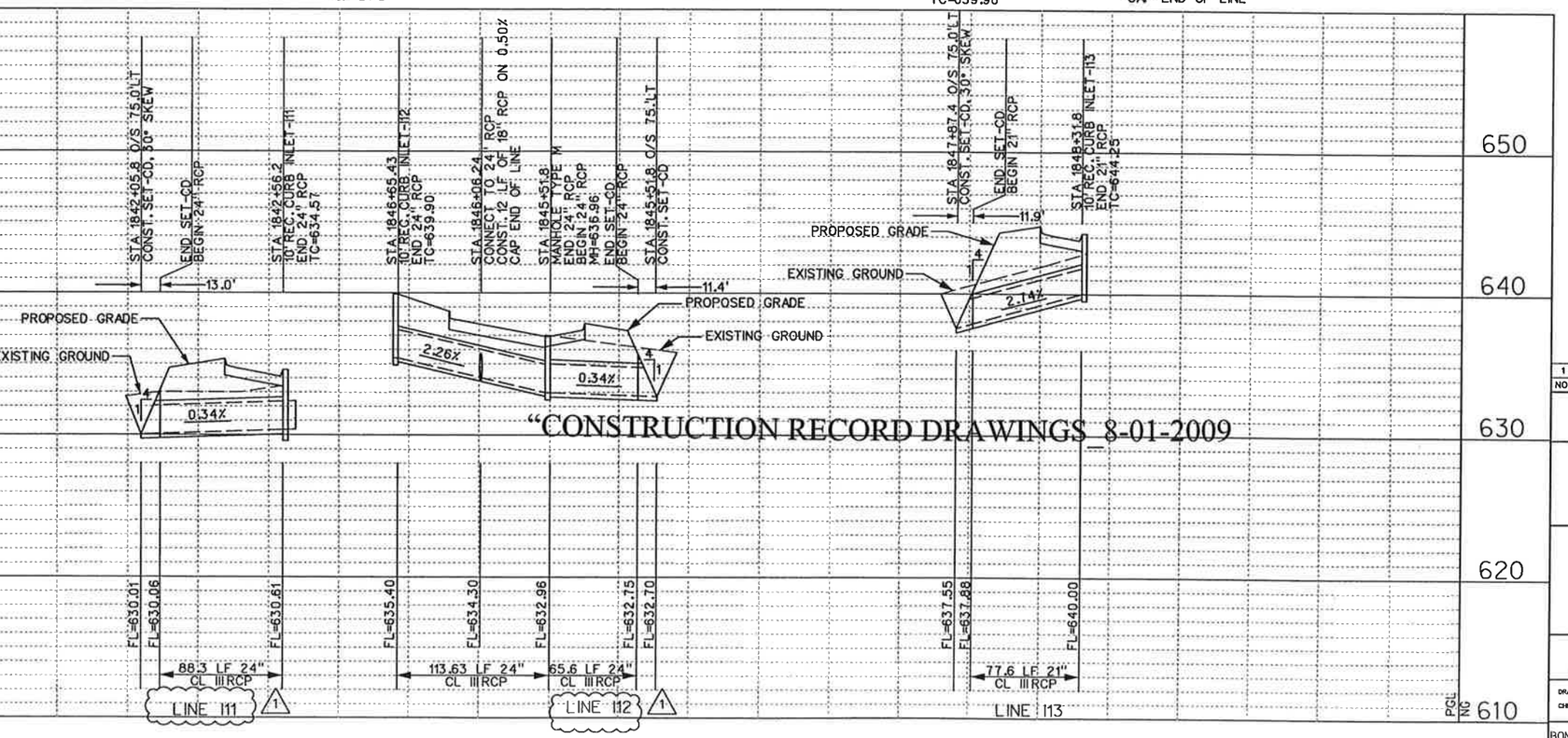

"CONSTRUCTION RECORD DRAWINGS 8-01-2009

STATE OF TEXAS
DENNIS D. SATRE
71590
REGISTERED PROFESSIONAL ENGINEER
11.13.07

NO.	DATE	REVISION	APPROV.
1	11/13/07	MOD FOR FUTURE STREET CONNECTION	D. SATRE

DALLAS PARKWAY EXTENSION

COLLIN COUNTY, TEXAS

DRAINAGE PLAN – PROFILE
EAST SERVICE ROAD
STA 1840+00 TO STA 1850+00

21

Halff Associates, Inc.
ENGINEERS · ARCHITECTS · SCIENTISTS · PLANNERS · SURVEYORS

DRAWN MDB DATE DEC 2006 DESIGNED DDS DATE
CHECKED DDS DATE SCALE

BOND PROJECT NO. 03-13 SHEET 190 OF 271

11/13/2007 P-2006-12-01

11:01:05 AM
i:\23000s\23819\frisco\DGN\23819SDPLP21.dgn

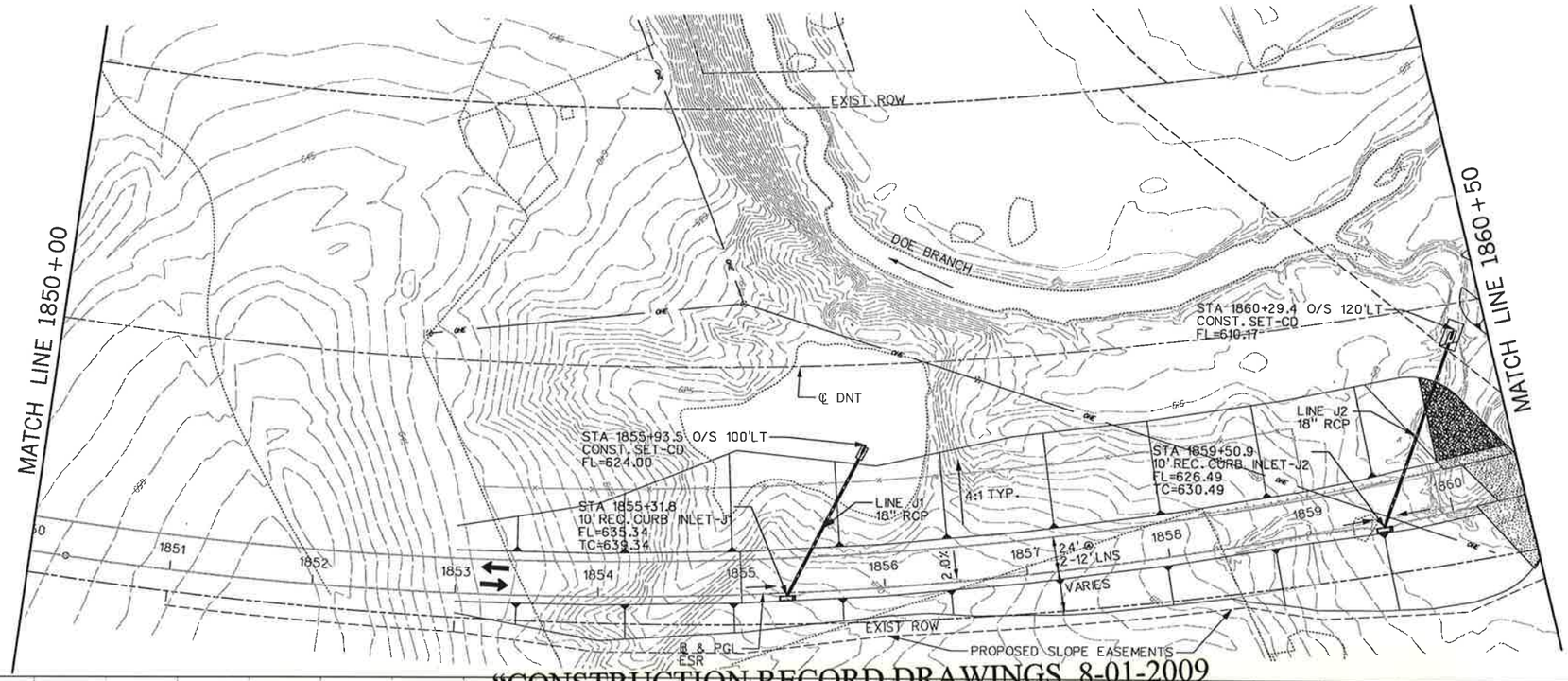

"CONSTRUCTION RECORD DRAWINGS_8-01-2009

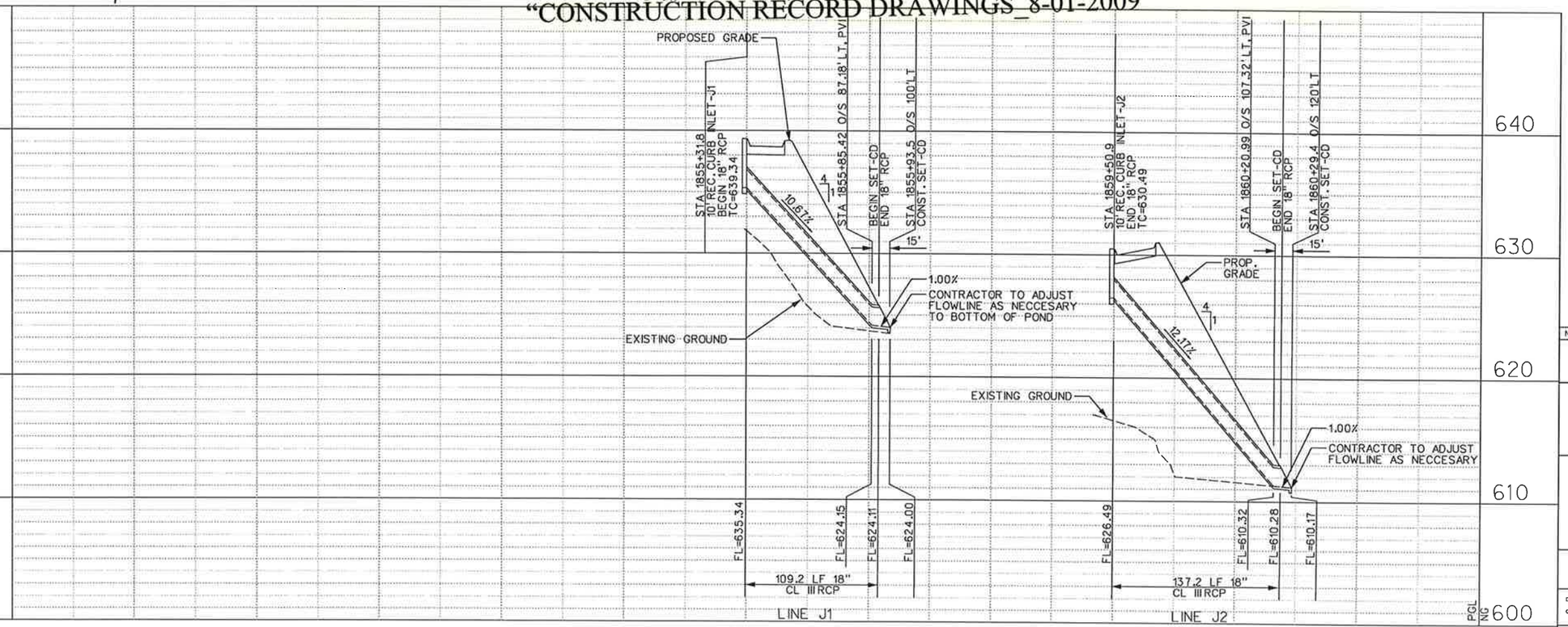

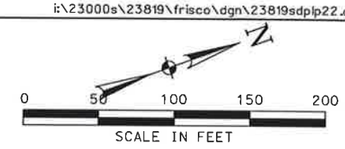

NOTES:

1. EXISTING UTILITIES SHOWN ARE APPROXIMATE. CONTRACTOR SHALL CONFIRM PRESENCE AND LOCATION OF ALL UTILITIES PRIOR TO WORK.

2. SEE PAVING PLANS FOR ROADWAY GEOMETRY.

3. SEE DRAINAGE DETAILS FOR INLET AND S.E.T. LAYOUT DIMENSIONS.

4. SEE CULVERT LAYOUTS FOR ADDITIONAL INFORMATION AND GRADING DETAILS.

NO.	DATE	REVISION	APPROV.

DALLAS PARKWAY EXTENSION

COLLIN COUNTY

DRAINAGE PLAN – PROFILE
EAST SERVICE ROAD
STA 1850+00 TO STA 1860+50

22

Halff Associates, Inc.
ENGINEERS · ARCHITECTS · SCIENTISTS · PLANNERS · SURVEYORS

DRAWN MDB	DATE DEC 2006	DESIGNED DDS	DATE
CHECKED DDS	DATE	SCALE	

BOND PROJECT NO. 03-13 SHEET 191 OF 271

P-200612-01

i:\23000s\23819\frisco\dgn\23819sdplp23.dgn

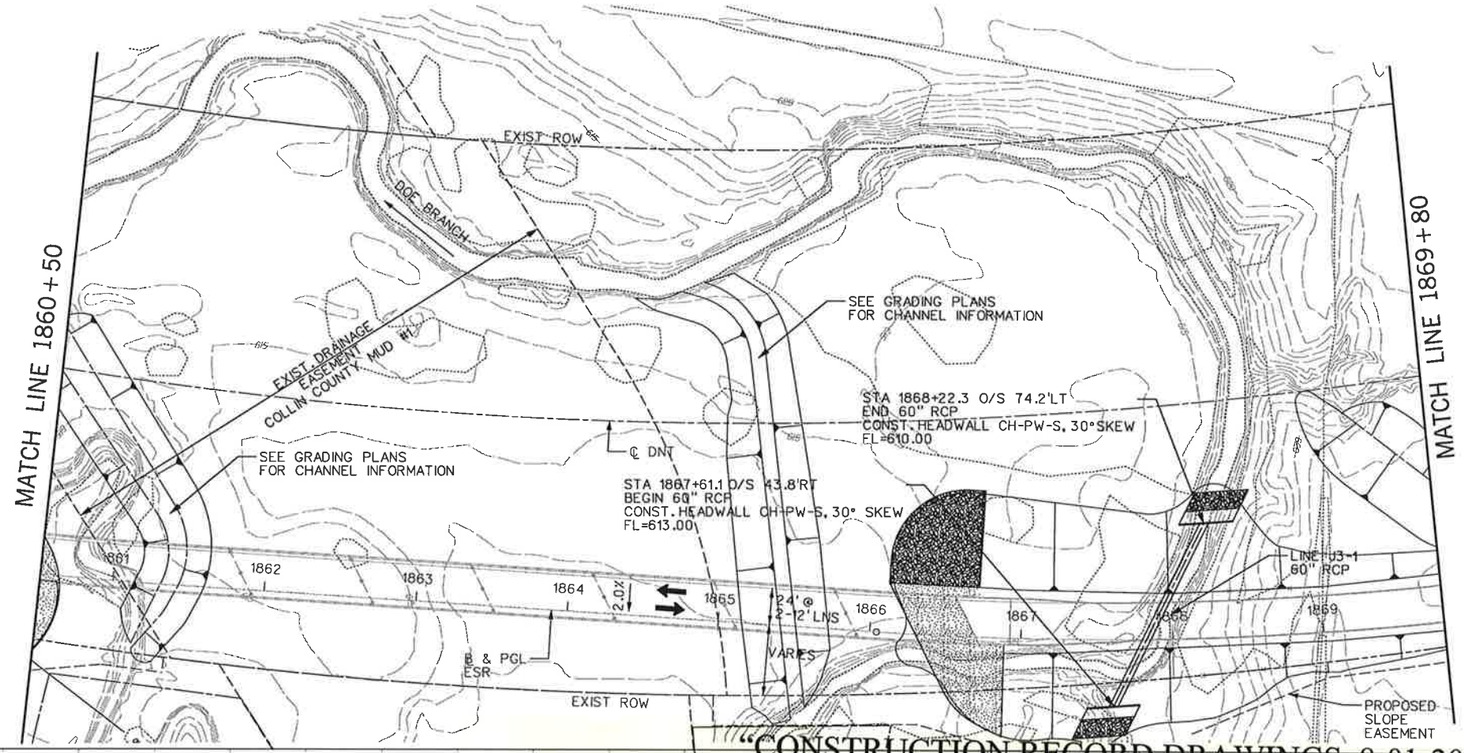

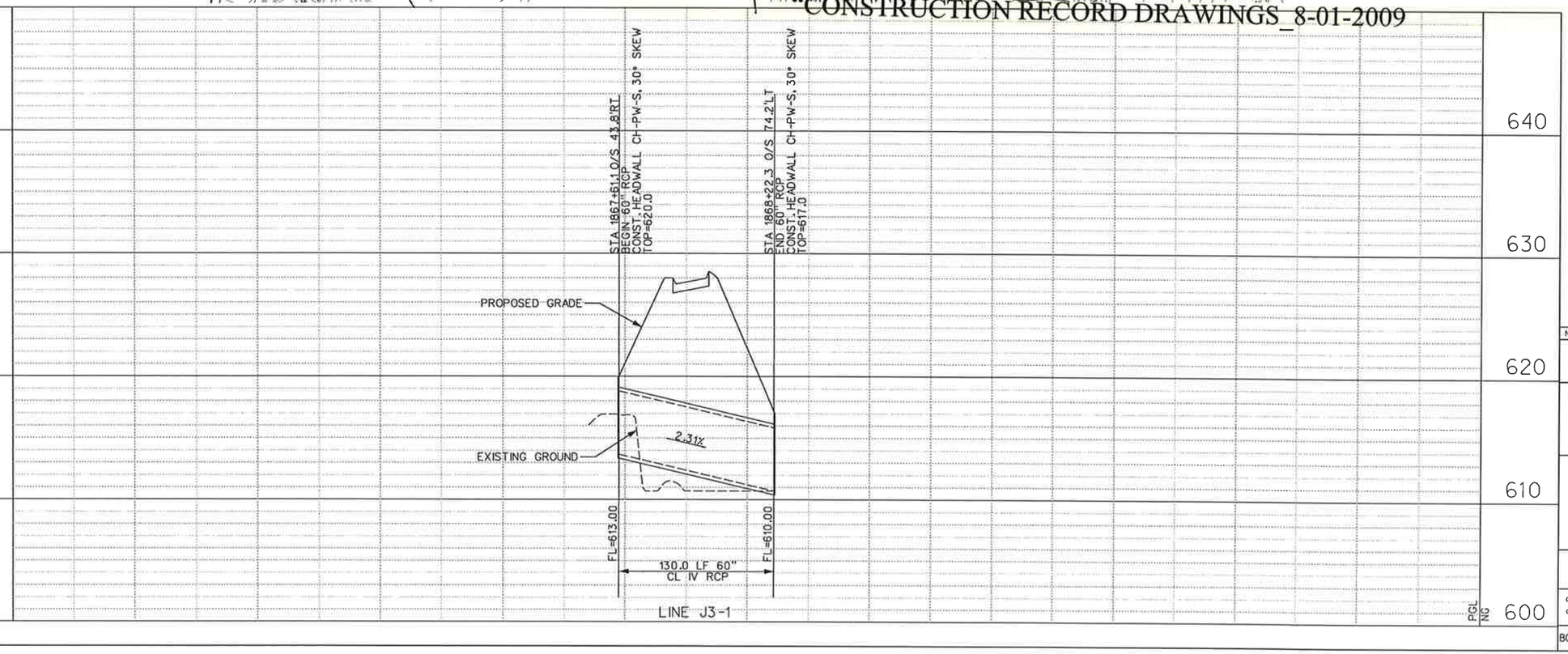

"CONSTRUCTION RECORD DRAWINGS_8-01-2009

N

0 50 100 150 200

SCALE IN FEET

NOTES:

1. EXISTING UTILITIES SHOWN ARE APPROXIMATE. CONTRACTOR SHALL CONFIRM PRESENCE AND LOCATION OF ALL UTILITIES PRIOR TO WORK.

2. SEE PAVING PLANS FOR ROADWAY GEOMETRY.

3. SEE DRAINAGE DETAILS FOR INLET AND S.E.T. LAYOUT DIMENSIONS.

4. SEE CULVERT LAYOUTS FOR ADDITIONAL INFORMATION AND GRADING DETAILS.

STATE OF TEXAS
DENNIS D. SATRE
71590
REGISTERED PROFESSIONAL ENGINEER
12/28/06

NO.	DATE	REVISION	APPROV.

DALLAS PARKWAY EXTENSION

COLLIN COUNTY

DRAINAGE PLAN – PROFILE
EAST SERVICE ROAD
STA 1860+50 TO STA 1869+80

23

Halff Associates, Inc.
ENGINEERS · ARCHITECTS · SCIENTISTS · PLANNERS · SURVEYORS

DRAWN MDB DATE DEC 2006 DESIGNED DDS DATE
CHECKED DDS DATE SCALE

BOND PROJECT NO. 03-13 SHEET 192 OF 271

P-200612-01

12/28/2006 2:51:20 PM

2:51:20 PM
i:\23000s\23819\frisco\dgn\23819sdplp23.dgn

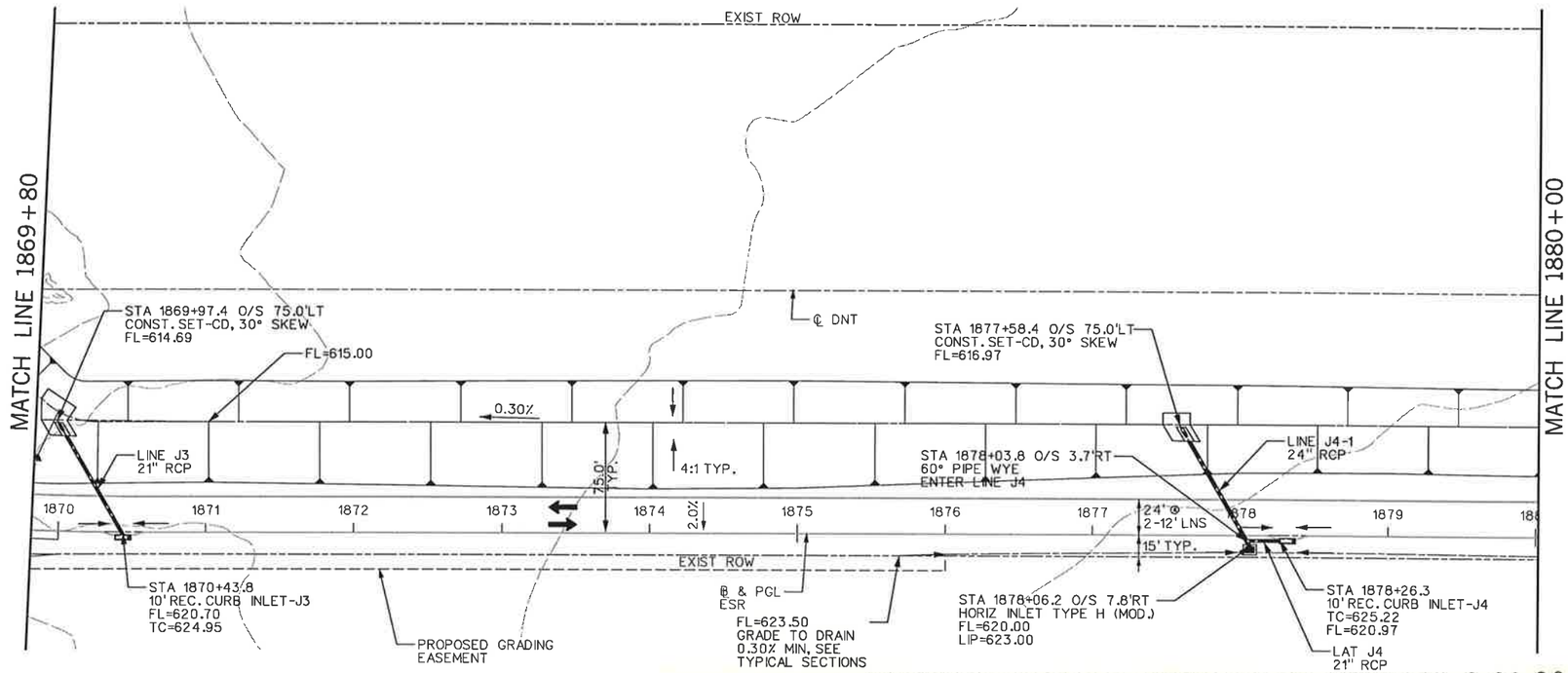

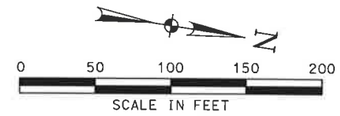

NOTES:

1. EXISTING UTILITIES SHOWN ARE APPROXIMATE. CONTRACTOR SHALL CONFIRM PRESENCE AND LOCATION OF ALL UTILITIES PRIOR TO WORK.

2. SEE PAVING PLANS FOR ROADWAY GEOMETRY.

3. SEE DRAINAGE DETAILS FOR INLET AND S.E.T. LAYOUT DIMENSIONS.

4. SEE CULVERT LAYOUTS FOR ADDITIONAL INFORMATION AND GRADING DETAILS.

"CONSTRUCTION RECORD DRAWINGS 8-01-2009

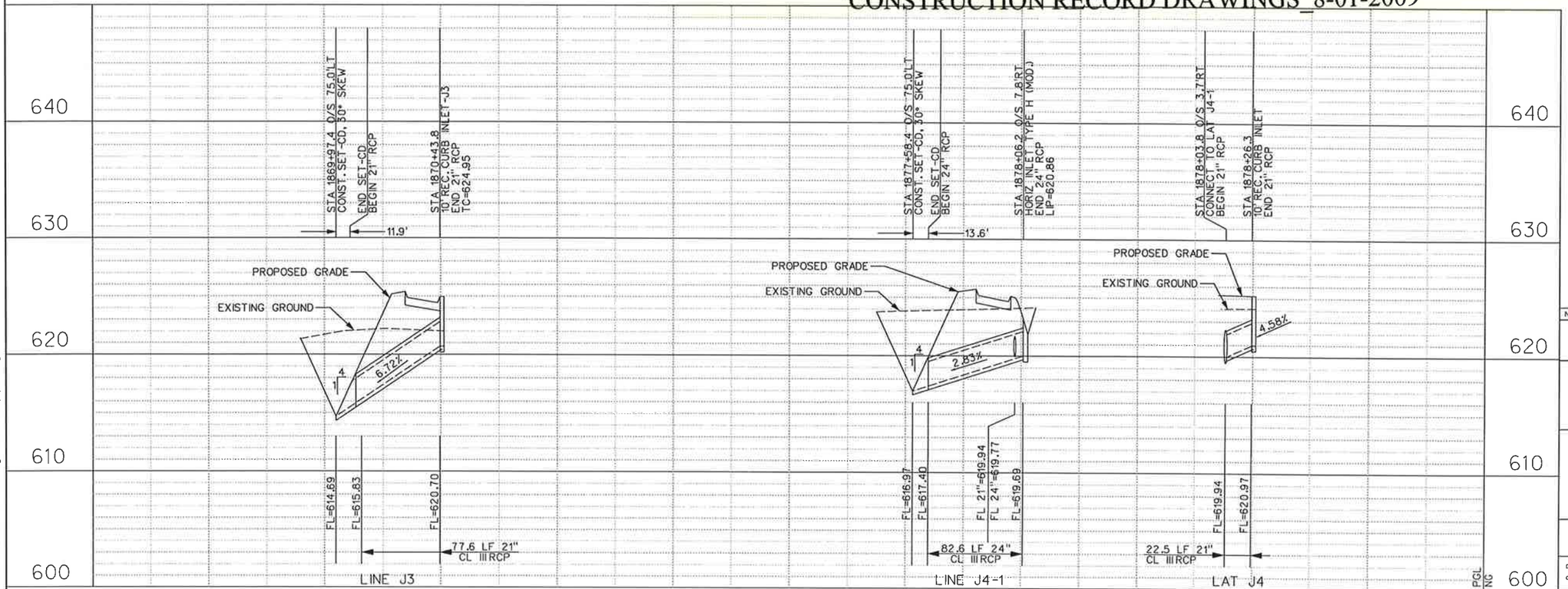

NO.	DATE	REVISION	APPROV.

DALLAS PARKWAY EXTENSION

COLLIN COUNTY

DRAINAGE PLAN – PROFILE
EAST SERVICE ROAD
STA 1869+80 TO STA 1880+00

24

Halff Associates, Inc.
ENGINEERS · ARCHITECTS · SCIENTISTS · PLANNERS · SURVEYORS

DRAWN MDB	DATE DEC 2006	DESIGNED DDS	DATE
CHECKED DDS	DATE	SCALE	

BOND PROJECT NO. 03-13 SHEET 193 OF 271

P-200612-01

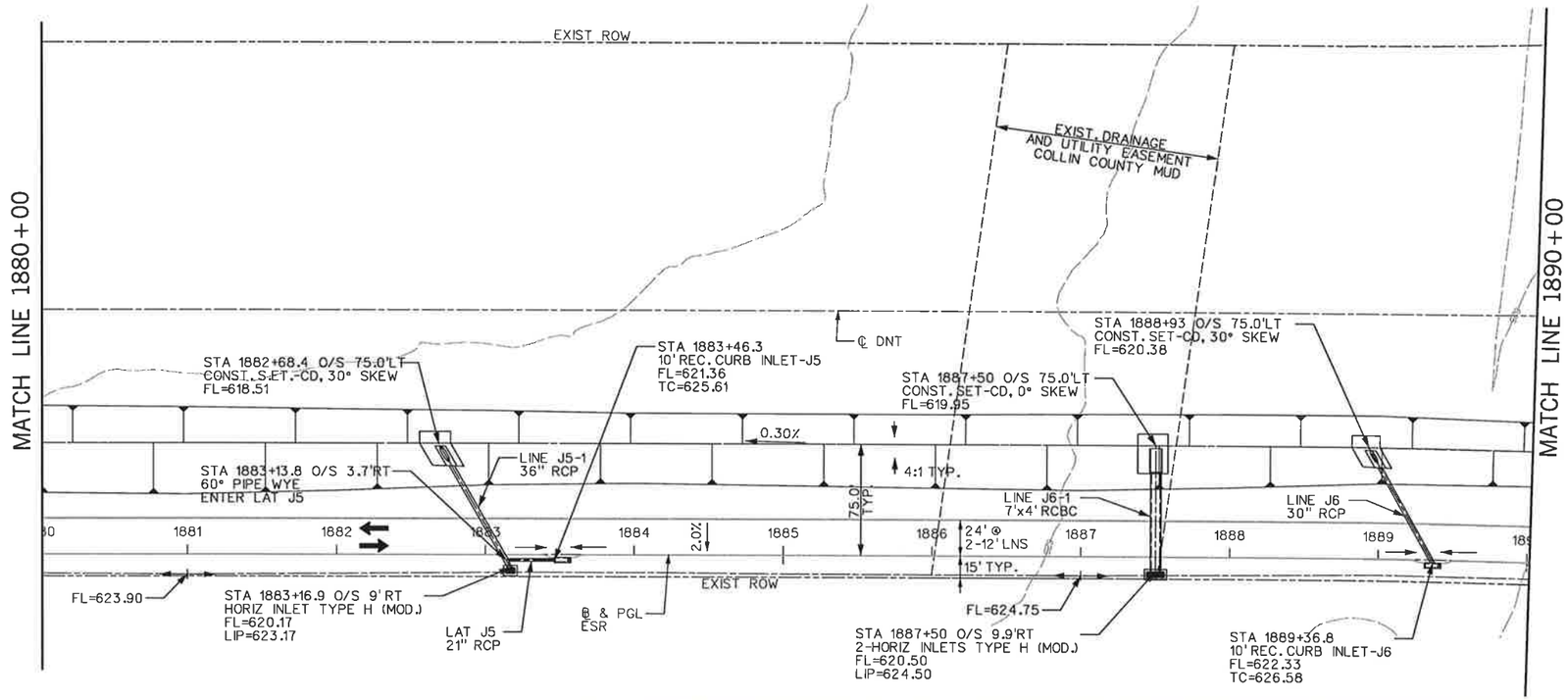

"CONSTRUCTION RECORD DRAWINGS 8-01-2009

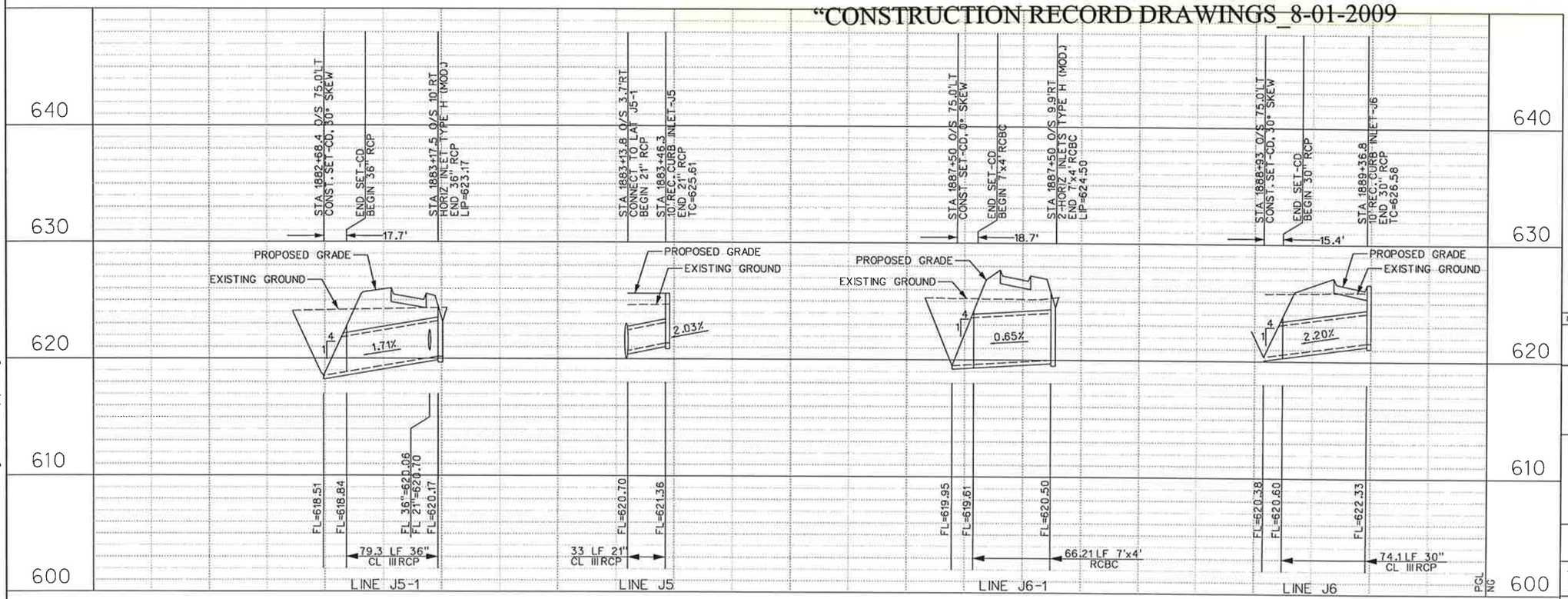

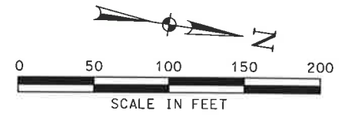

NOTES:

1. EXISTING UTILITIES SHOWN ARE APPROXIMATE. CONTRACTOR SHALL CONFIRM PRESENCE AND LOCATION OF ALL UTILITIES PRIOR TO WORK.

2. SEE PAVING PLANS FOR ROADWAY GEOMETRY.

3. SEE DRAINAGE DETAILS FOR INLET AND S.E.T. LAYOUT DIMENSIONS.

4. SEE CULVERT LAYOUTS FOR ADDITIONAL INFORMATION AND GRADING DETAILS.

STATE OF TEXAS
DENNIS D. SATRE
71590
REGISTERED PROFESSIONAL ENGINEER
12/28/06

NO.	DATE	REVISION	APPROV.

DALLAS PARKWAY EXTENSION

COLLIN COUNTY

DRAINAGE PLAN – PROFILE
EAST SERVICE ROAD
STA 1880+00 TO STA 1890+00

25

Halff Associates, Inc.
ENGINEERS · ARCHITECTS · SCIENTISTS · PLANNERS · SURVEYORS

DRAWN MDB DATE DEC 2006 | DESIGNED DDS DATE
CHECKED DDS DATE | SCALE

BOND PROJECT NO. 03-13 SHEET 194 OF 271

P-200612-01

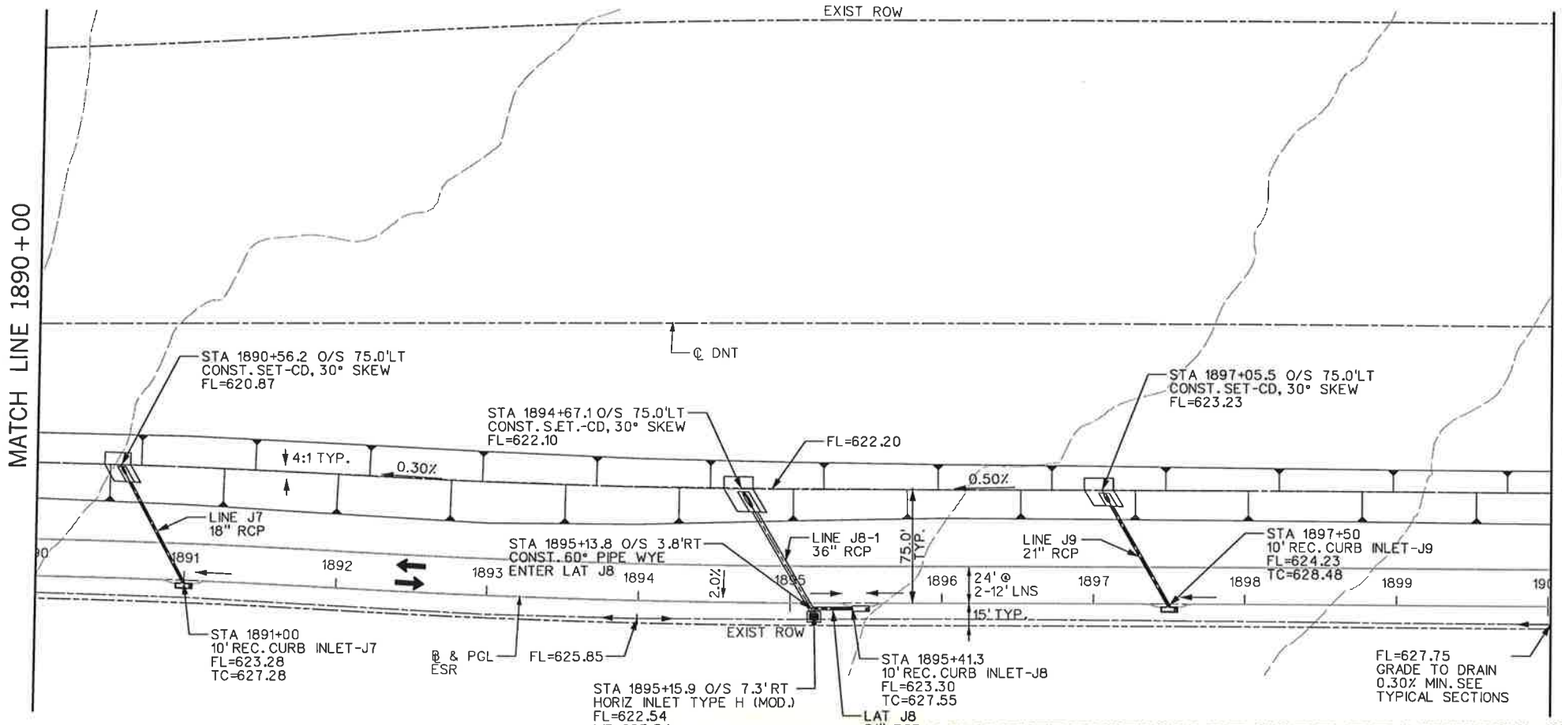

"CONSTRUCTION RECORD DRAWINGS 8-01-2009

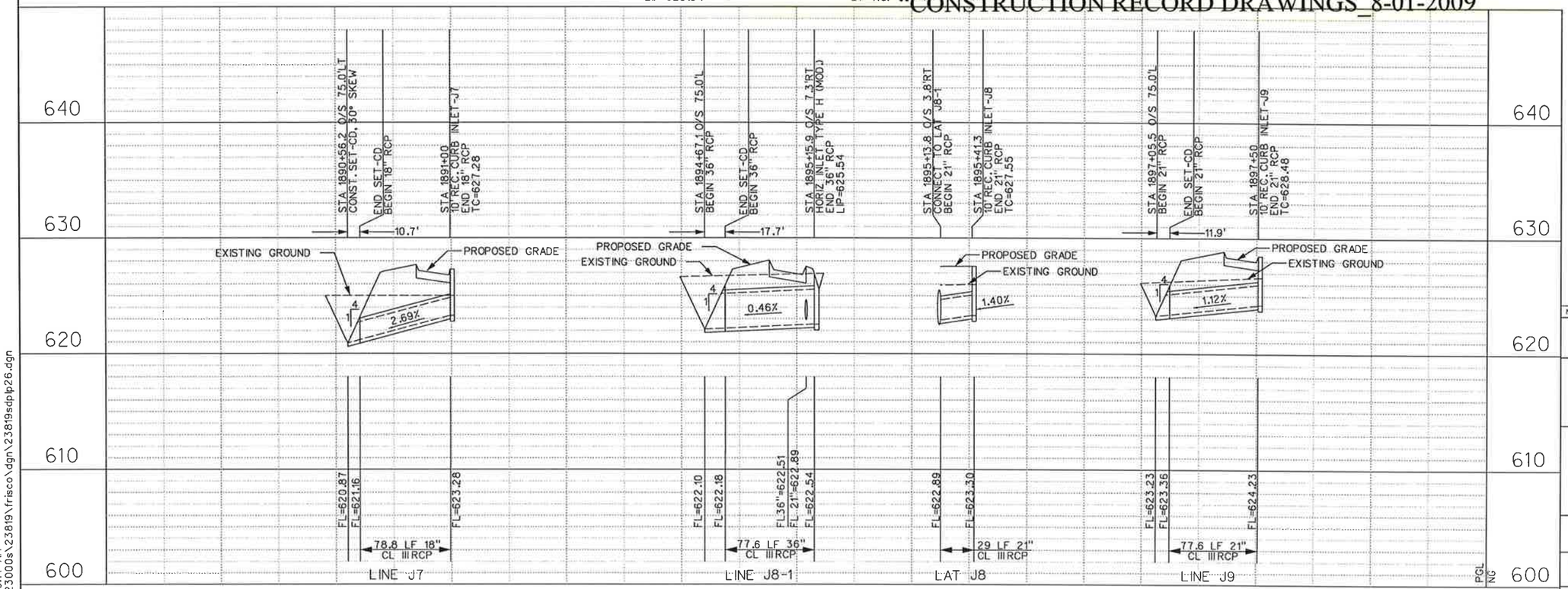

NOTES:

1. EXISTING UTILITIES SHOWN ARE APPROXIMATE. CONTRACTOR SHALL CONFIRM PRESENCE AND LOCATION OF ALL UTILITIES PRIOR TO WORK.

2. SEE PAVING PLANS FOR ROADWAY GEOMETRY.

3. SEE DRAINAGE DETAILS FOR INLET AND S.E.T. LAYOUT DIMENSIONS.

4. SEE CULVERT LAYOUTS FOR ADDITIONAL INFORMATION AND GRADING DETAILS.

STATE OF TEXAS
DENNIS D. SATRE
71590
REGISTERED PROFESSIONAL ENGINEER
12/28/06

NO.	DATE	REVISION	APPROV.

DALLAS PARKWAY EXTENSION

COLLIN COUNTY

DRAINAGE PLAN – PROFILE
EAST SERVICE ROAD
STA 1890+00 TO STA 1900+00

26

Halff Associates, Inc.
ENGINEERS · ARCHITECTS · SCIENTISTS · PLANNERS · SURVEYORS

DRAWN MDB DATE DEC 2006 DESIGNED DDS DATE
CHECKED DDS DATE SCALE

BOND PROJECT NO. 03-13 SHEET 195 OF 271

P-200612-01

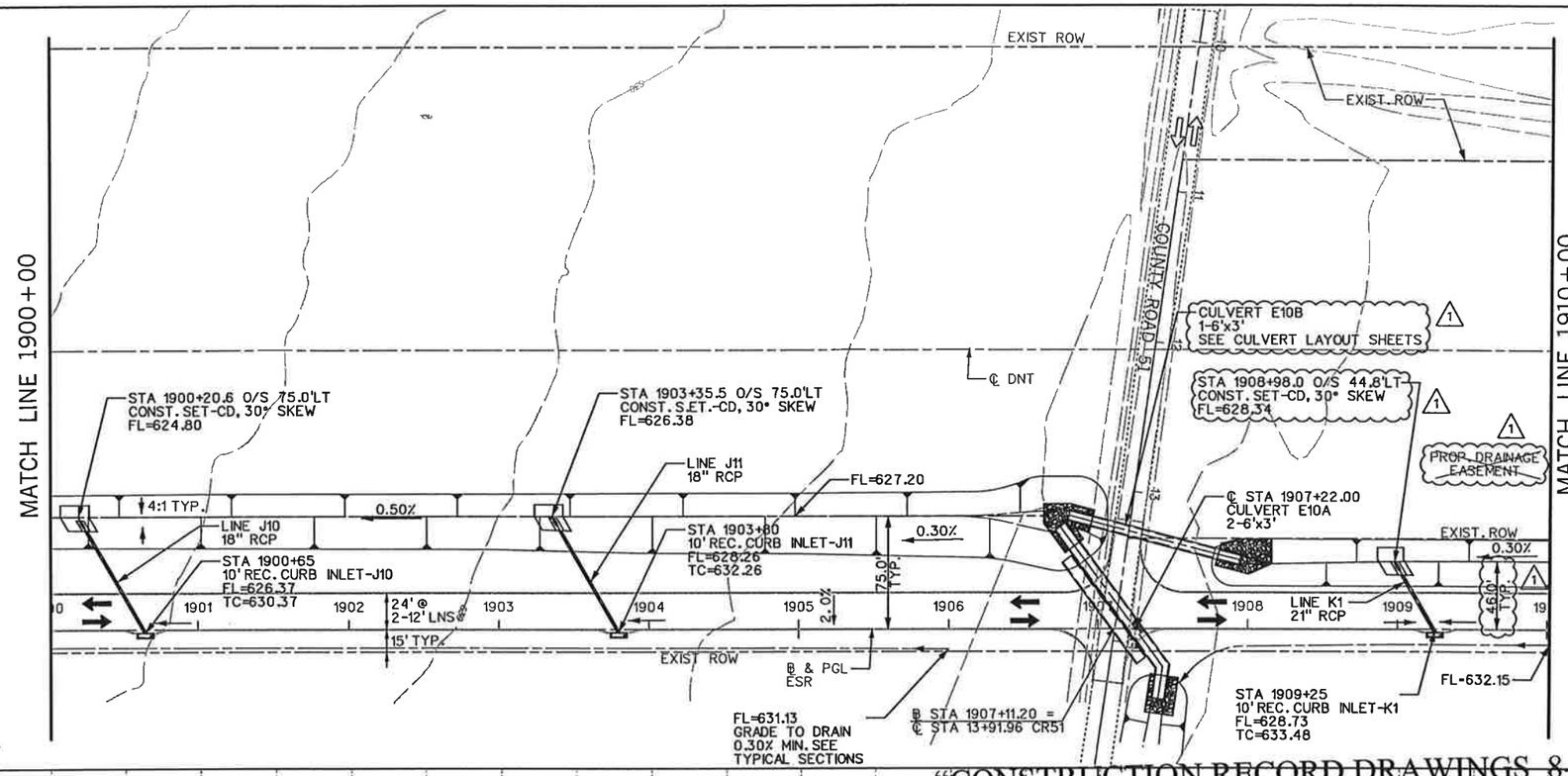

"CONSTRUCTION RECORD DRAWINGS 8-01-2009

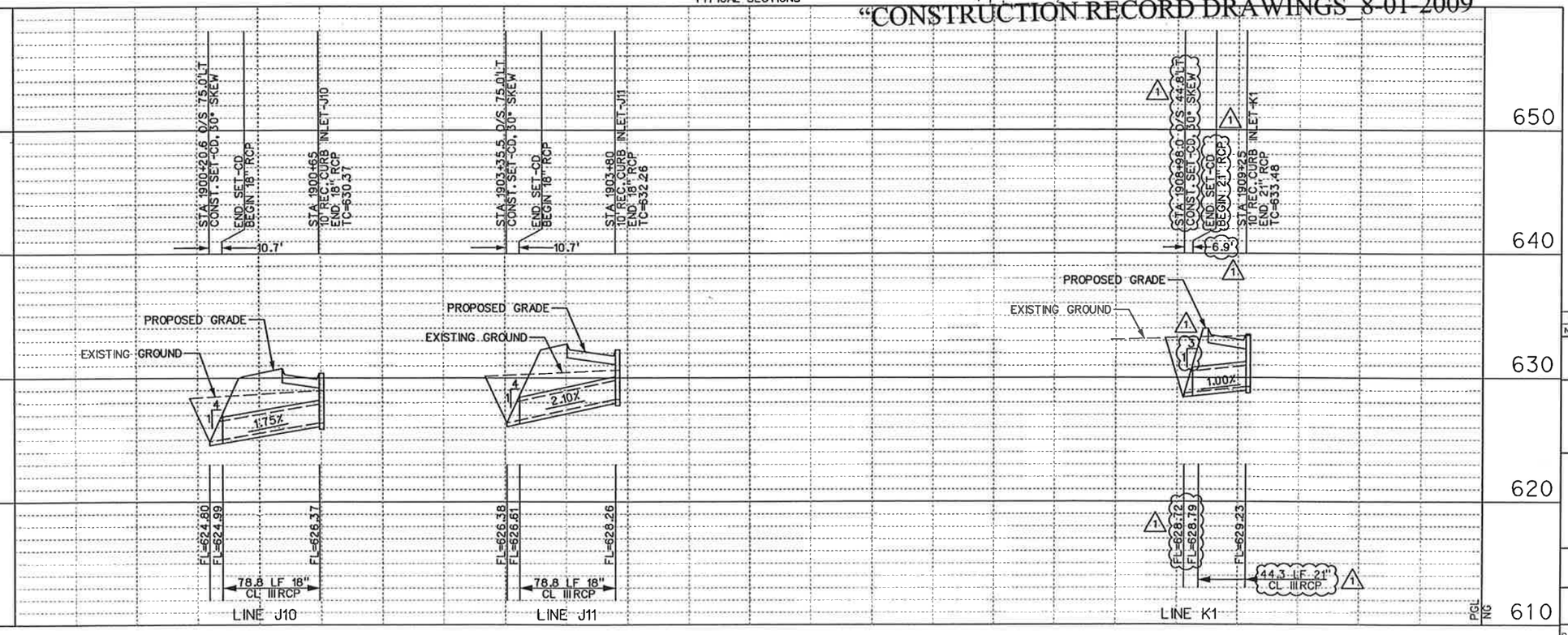

NOTES:

1. EXISTING UTILITIES SHOWN ARE APPROXIMATE. CONTRACTOR SHALL CONFIRM PRESENCE AND LOCATION OF ALL UTILITIES PRIOR TO WORK.

2. SEE PAVING PLANS FOR ROADWAY GEOMETRY.

3. SEE DRAINAGE DETAILS FOR INLET AND S.E.T. LAYOUT DIMENSIONS.

4. SEE CULVERT LAYOUTS FOR ADDITIONAL INFORMATION AND GRADING DETAILS.

NO.	DATE	REVISION	APPROV.
1	9/27/07	REV. CULVERT & DITCH LOCATION - C.O. #2	D. SATRE

DALLAS PARKWAY EXTENSION

DRAINAGE PLAN – PROFILE
EAST SERVICE ROAD
STA 1900+00 TO STA 1910+00

27

Halff Associates, Inc.
ENGINEERS · ARCHITECTS · SCIENTISTS · PLANNERS · SURVEYORS

DRAWN MDB DATE DEC 2006 | DESIGNED DDS DATE
CHECKED DDS DATE | SCALE

BOND PROJECT NO. 03-13 SHEET 196 OF 271

i:\23000s\23819\FRISCO\DGN\23819SDPLP28.dgn

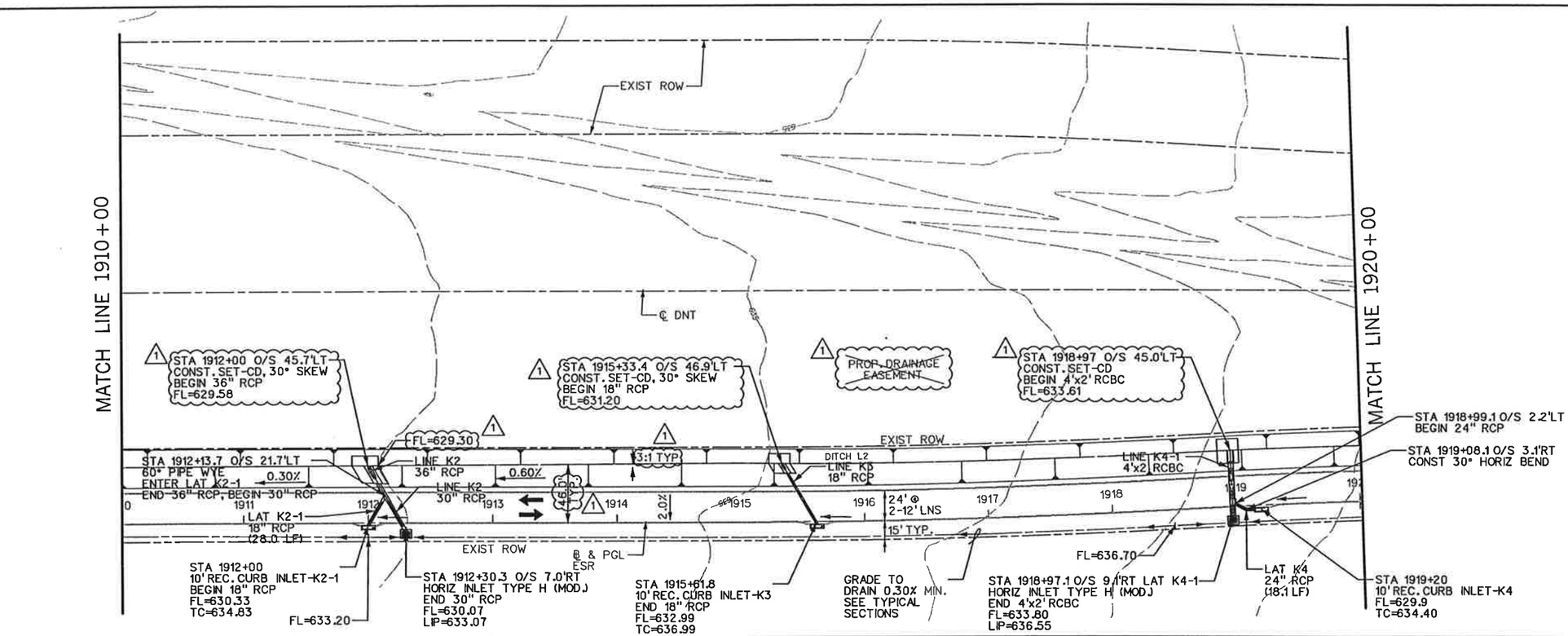

"CONSTRUCTION RECORD DRAWINGS 8-01-2009

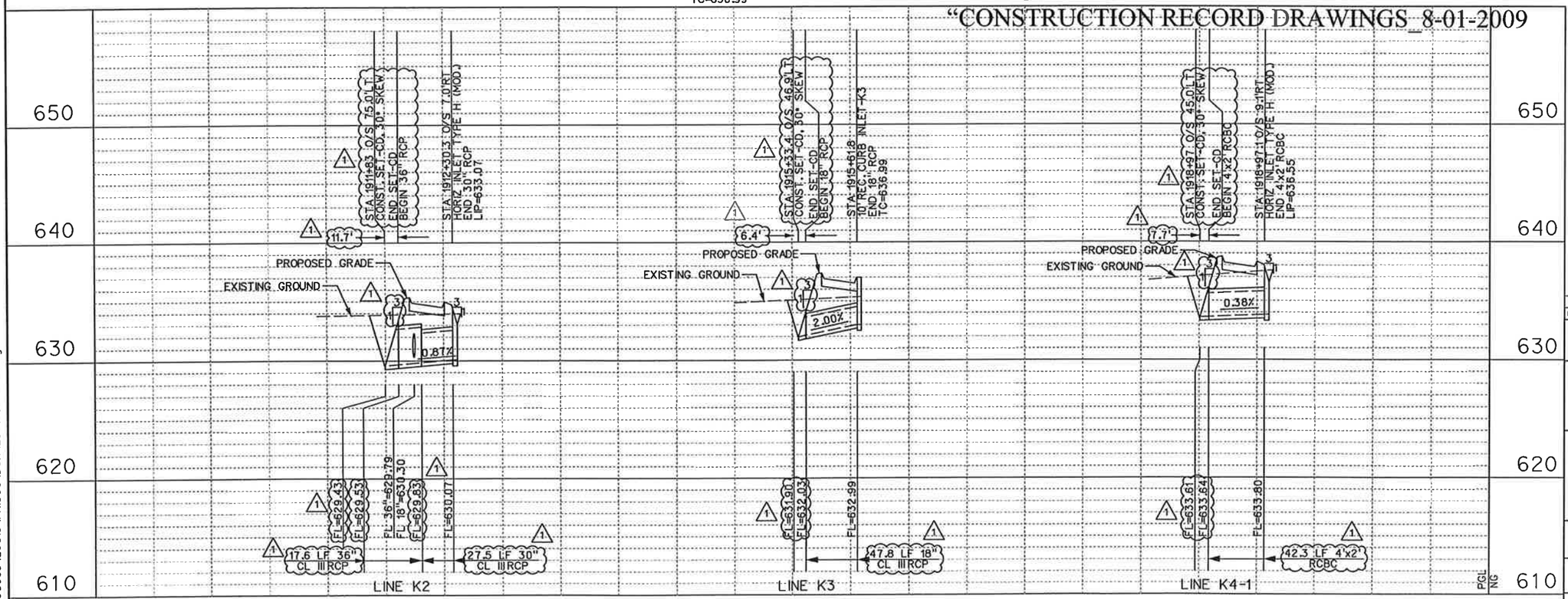

0 50 100 150 200
SCALE IN FEET

NOTES:

1. EXISTING UTILITIES SHOWN ARE APPROXIMATE. CONTRACTOR SHALL CONFIRM PRESENCE AND LOCATION OF ALL UTILITIES PRIOR TO WORK.

2. SEE PAVING PLANS FOR ROADWAY GEOMETRY.

3. SEE DRAINAGE DETAILS FOR INLET AND S.E.T. LAYOUT DIMENSIONS.

4. SEE CULVERT LAYOUTS FOR ADDITIONAL INFORMATION AND GRADING DETAILS.

STATE OF TEXAS
DENNIS D. SATRE
71590
REGISTERED PROFESSIONAL ENGINEER
9-27-07

NO.	DATE	REVISION	APPROV.
1	9/27/07	REV. CULVERT & DITCH - C.O. #2	APPROV.

DALLAS PARKWAY EXTENSION

COLL IN COUNTY

DRAINAGE PLAN – PROFILE
EAST SERVICE ROAD
STA 1910+00 TO STA 1920+00

28

Halff Associates, Inc.
ENGINEERS · ARCHITECTS · SCIENTISTS · PLANNERS · SURVEYORS

DRAWN MDB DATE DEC 2006 DESIGNED DDS DATE
CHECKED DDS DATE SCALE

BOND PROJECT NO. 03-13 SHEET 197 OF 271

10/9/2007 P-200612-01

2:33:03 PM
i:\23000s\23819\FRISCO\DGN\23819SDPLP28.dgn

$$$$$$$$$$$$$dgnspec$$$$$$$$$$$$$$$$

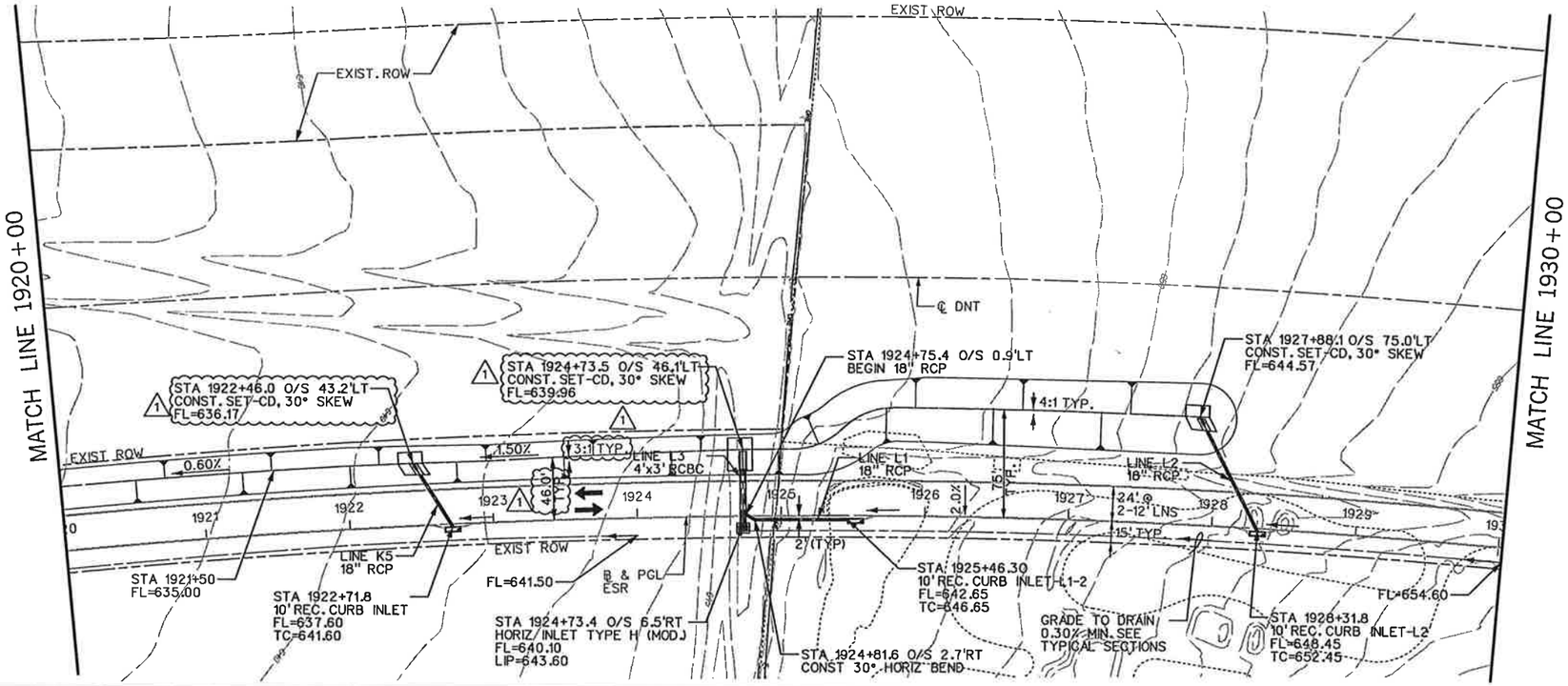

NOTES:

1. EXISTING UTILITIES SHOWN ARE APPROXIMATE. CONTRACTOR SHALL CONFIRM PRESENCE AND LOCATION OF ALL UTILITIES PRIOR TO WORK.

2. SEE PAVING PLANS FOR ROADWAY GEOMETRY.

3. SEE DRAINAGE DETAILS FOR INLET AND S.E.T. LAYOUT DIMENSIONS.

4. SEE CULVERT LAYOUTS FOR ADDITIONAL INFORMATION AND GRADING DETAILS.

"CONSTRUCTION RECORD DRAWINGS - 8-01-2009

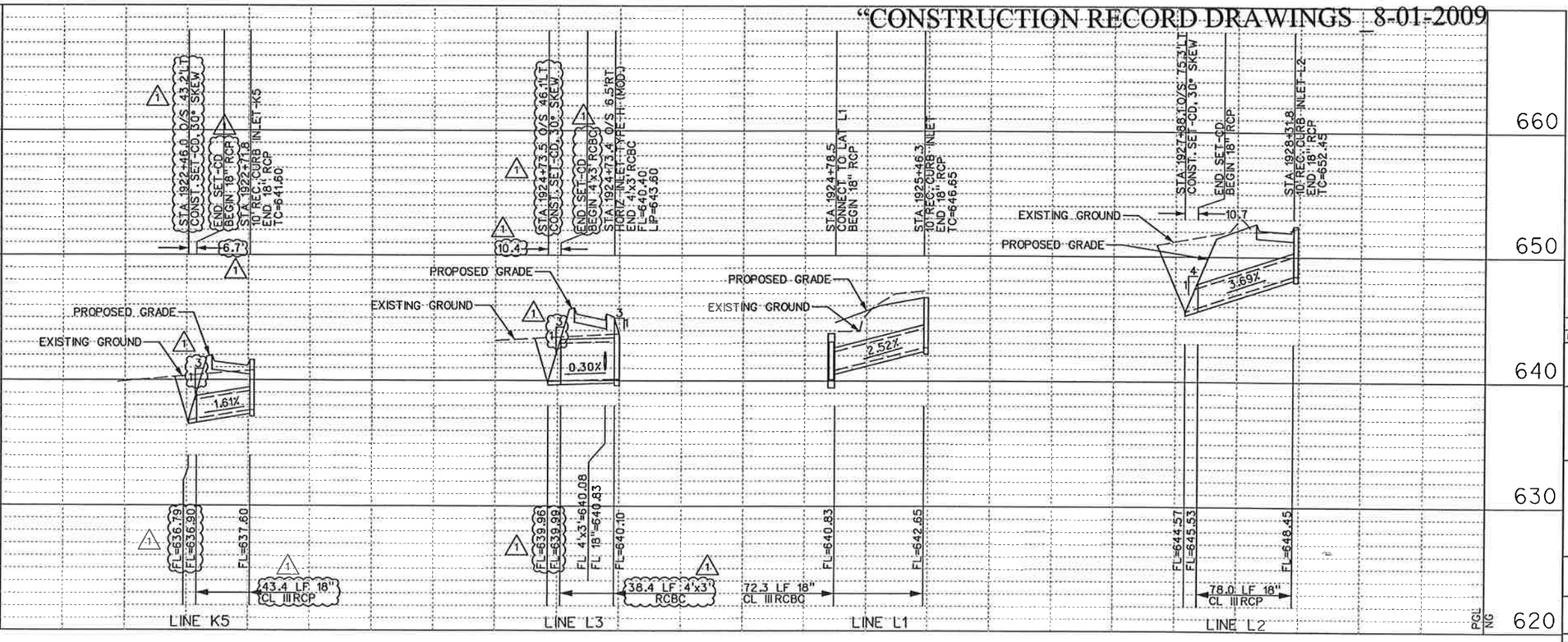

STATE OF TEXAS
DENNIS D. SATRE
71590
REGISTERED PROFESSIONAL ENGINEER
9.27.07

NO.	DATE	REVISION	APPROV.
1	9/27/07	REV. CULVERT E & DITCH - C.O. #2	D. SATRE

DALLAS PARKWAY EXTENSION

COLLIN COUNTY

DRAINAGE PLAN – PROFILE
EAST SERVICE ROAD
STA 1920+00 TO STA 1930+00

29

Halff Associates, Inc.
ENGINEERS · ARCHITECTS · SCIENTISTS · PLANNERS · SURVEYORS

DRAWN MDB DATE DEC 2006 | DESIGNED DDS DATE
CHECKED DDS DATE | SCALE

BOND PROJECT NO. 03-13 SHEET 198 OF 271

P-200612.01

$$$$$$$sytime$$$$$$$
$$$$$$$$$$$$$dgnspec$$$$$$$$$$$$$$$$$$$$
$$sydate$$ $$$$$$sytime$$$$$$

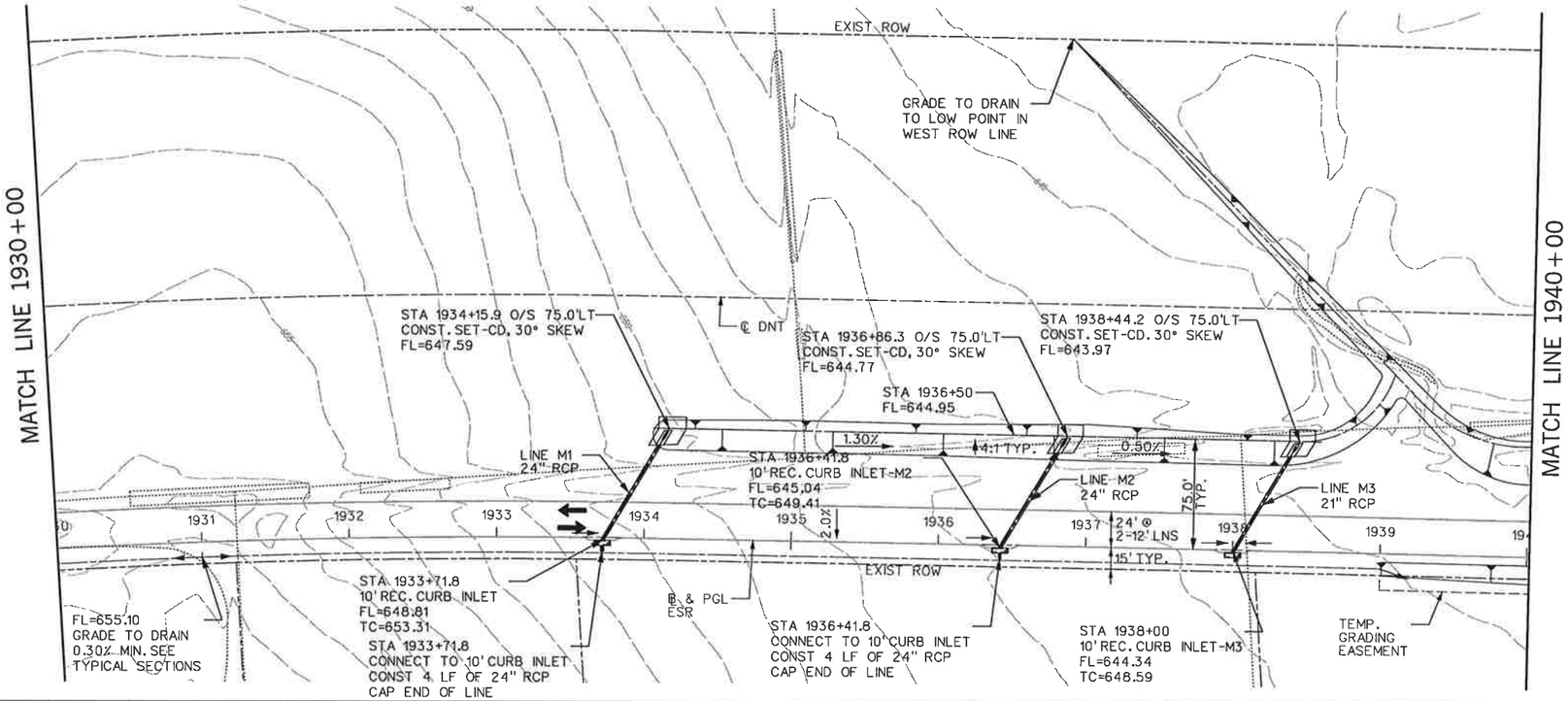

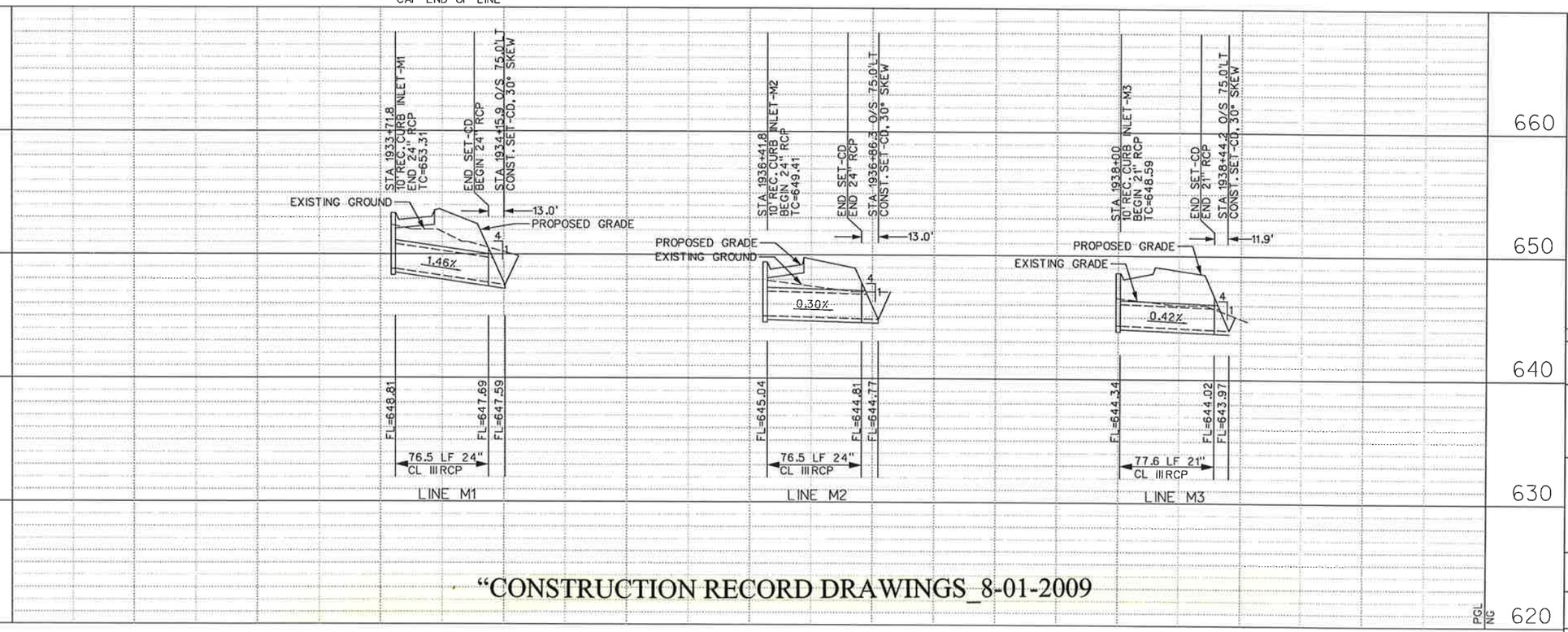

"CONSTRUCTION RECORD DRAWINGS_8-01-2009

0 50 100 150 200
SCALE IN FEET

NOTES:

1. EXISTING UTILITIES SHOWN ARE APPROXIMATE. CONTRACTOR SHALL CONFIRM PRESENCE AND LOCATION OF ALL UTILITIES PRIOR TO WORK.

2. SEE PAVING PLANS FOR ROADWAY GEOMETRY.

3. SEE DRAINAGE DETAILS FOR INLET AND S.E.T. LAYOUT DIMENSIONS.

4. SEE CULVERT LAYOUTS FOR ADDITIONAL INFORMATION AND GRADING DETAILS.

STATE OF TEXAS
DENNIS D. SATRE
71590
REGISTERED PROFESSIONAL ENGINEER
12/28/06

NO.	DATE	REVISION	APPROV.

DALLAS PARKWAY EXTENSION

COLLIN COUNTY

DRAINAGE PLAN – PROFILE

EAST SERVICE ROAD
STA 1930+00 TO STA 1940+00

30

Halff Associates, Inc.
ENGINEERS · ARCHITECTS · SCIENTISTS · PLANNERS · SURVEYORS

DRAWN MDB	DATE DEC 2006	DESIGNED DDS	DATE
CHECKED DDS	DATE	SCALE	

BOND PROJECT NO. 03-13 SHEET 199 OF 271

P-200612-01

i:\23000s\23819\frisco\dgn\23819sdplp31.dgn

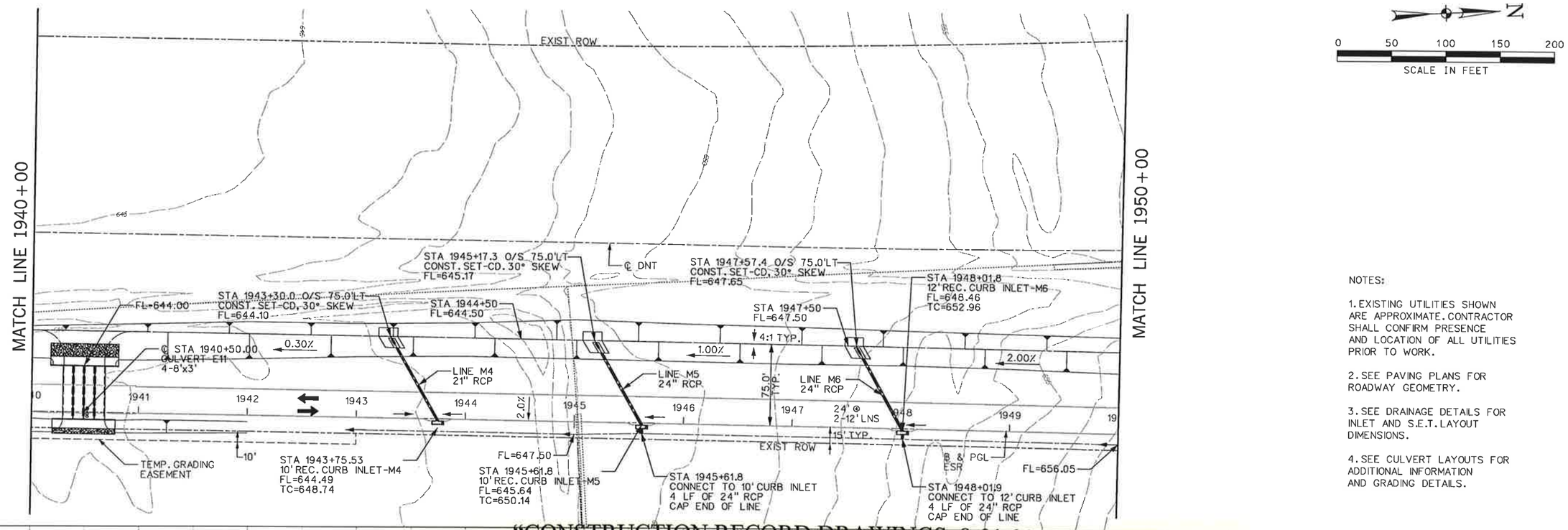

"CONSTRUCTION RECORD DRAWINGS_8-01-2009

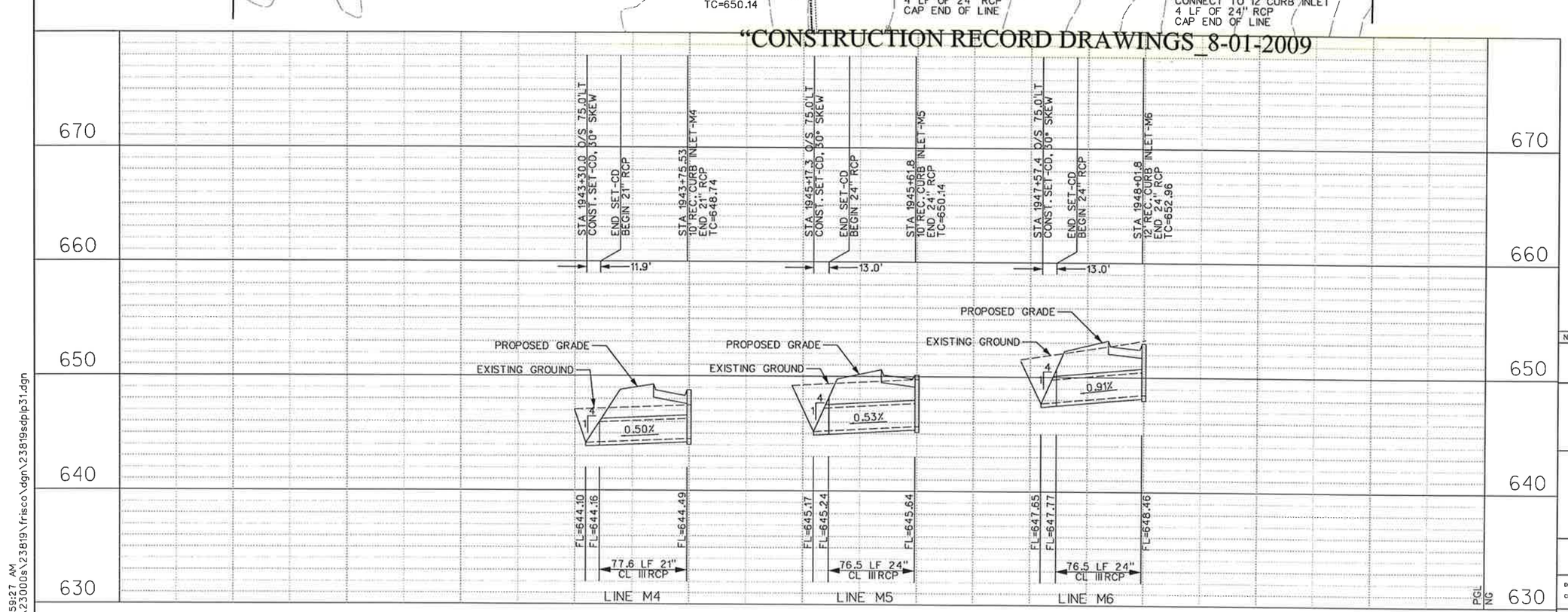

0 50 100 150 200
SCALE IN FEET

NOTES:

1. EXISTING UTILITIES SHOWN ARE APPROXIMATE. CONTRACTOR SHALL CONFIRM PRESENCE AND LOCATION OF ALL UTILITIES PRIOR TO WORK.

2. SEE PAVING PLANS FOR ROADWAY GEOMETRY.

3. SEE DRAINAGE DETAILS FOR INLET AND S.E.T. LAYOUT DIMENSIONS.

4. SEE CULVERT LAYOUTS FOR ADDITIONAL INFORMATION AND GRADING DETAILS.

STATE OF TEXAS
DENNIS D. SATRE
71590
REGISTERED PROFESSIONAL ENGINEER
12/28/06

NO.	DATE	REVISION	APPROV.

DALLAS PARKWAY EXTENSION

COLLIN COUNTY

DRAINAGE PLAN – PROFILE
EAST SERVICE ROAD
STA 1940+00 TO STA 1950+00

31

Halff Associates, Inc.
ENGINEERS · ARCHITECTS · SCIENTISTS · PLANNERS · SURVEYORS

DRAWN MDB DATE DEC 2006 DESIGNED DDS DATE
CHECKED DDS DATE SCALE

BOND PROJECT NO. 03-13 SHEET 200 OF 271

P-200612-01

11:59:27 AM
i:\23000s\23819\frisco\dgn\23819sdplp31.dgn

12/28/2006 11:59:27 AM

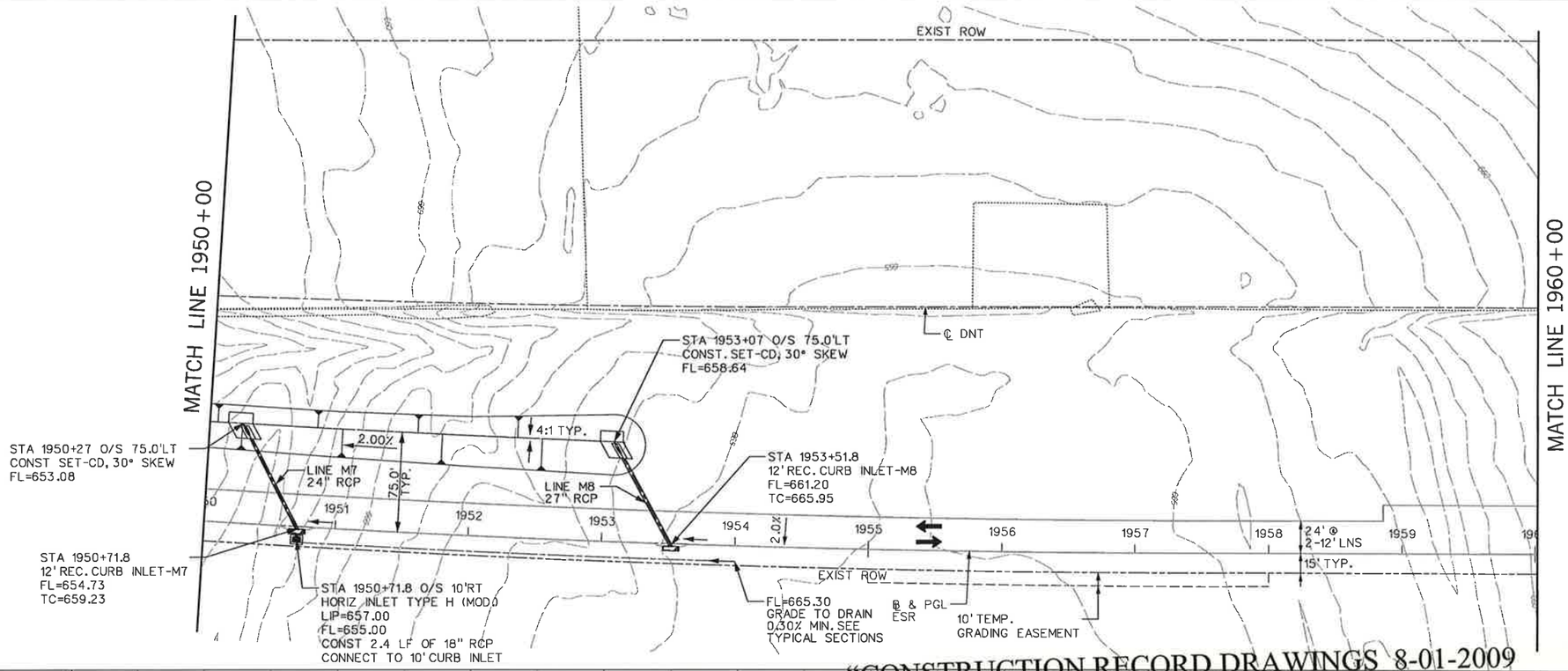

"CONSTRUCTION RECORD DRAWINGS_8-01-2009

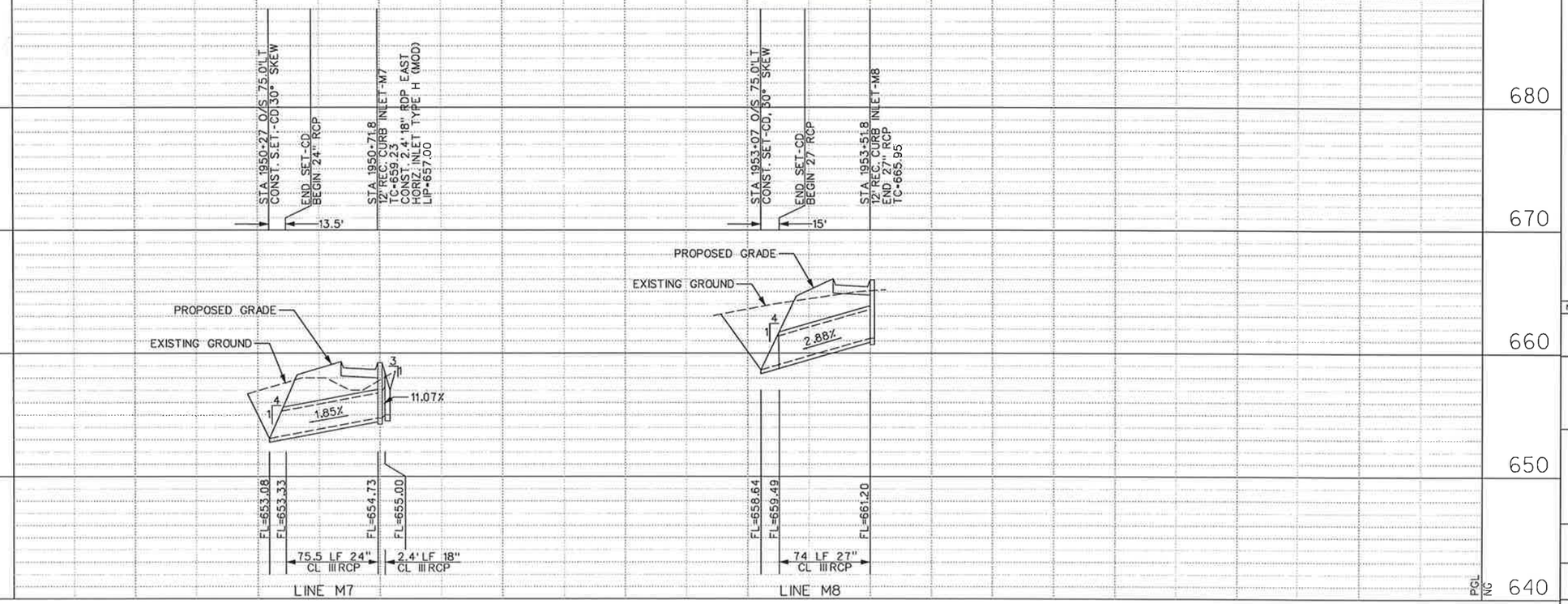

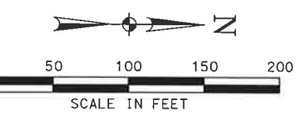

NOTES:

1. EXISTING UTILITIES SHOWN ARE APPROXIMATE. CONTRACTOR SHALL CONFIRM PRESENCE AND LOCATION OF ALL UTILITIES PRIOR TO WORK.

2. SEE PAVING PLANS FOR ROADWAY GEOMETRY.

3. SEE DRAINAGE DETAILS FOR INLET AND S.E.T. LAYOUT DIMENSIONS.

4. SEE CULVERT LAYOUTS FOR ADDITIONAL INFORMATION AND GRADING DETAILS.

NO.	DATE	REVISION	APPROV.

DALLAS PARKWAY EXTENSION

COLLIN COUNTY

DRAINAGE PLAN – PROFILE
EAST SERVICE ROAD
STA 1950+00 TO STA 1960+00

32

Halff Associates, Inc.
ENGINEERS · ARCHITECTS · SCIENTISTS · PLANNERS · SURVEYORS

DRAWN MDB DATE DEC 2006 DESIGNED DDS DATE
CHECKED DDS DATE SCALE

BOND PROJECT NO. 03-13 SHEET 201 OF 271

P-200612-01

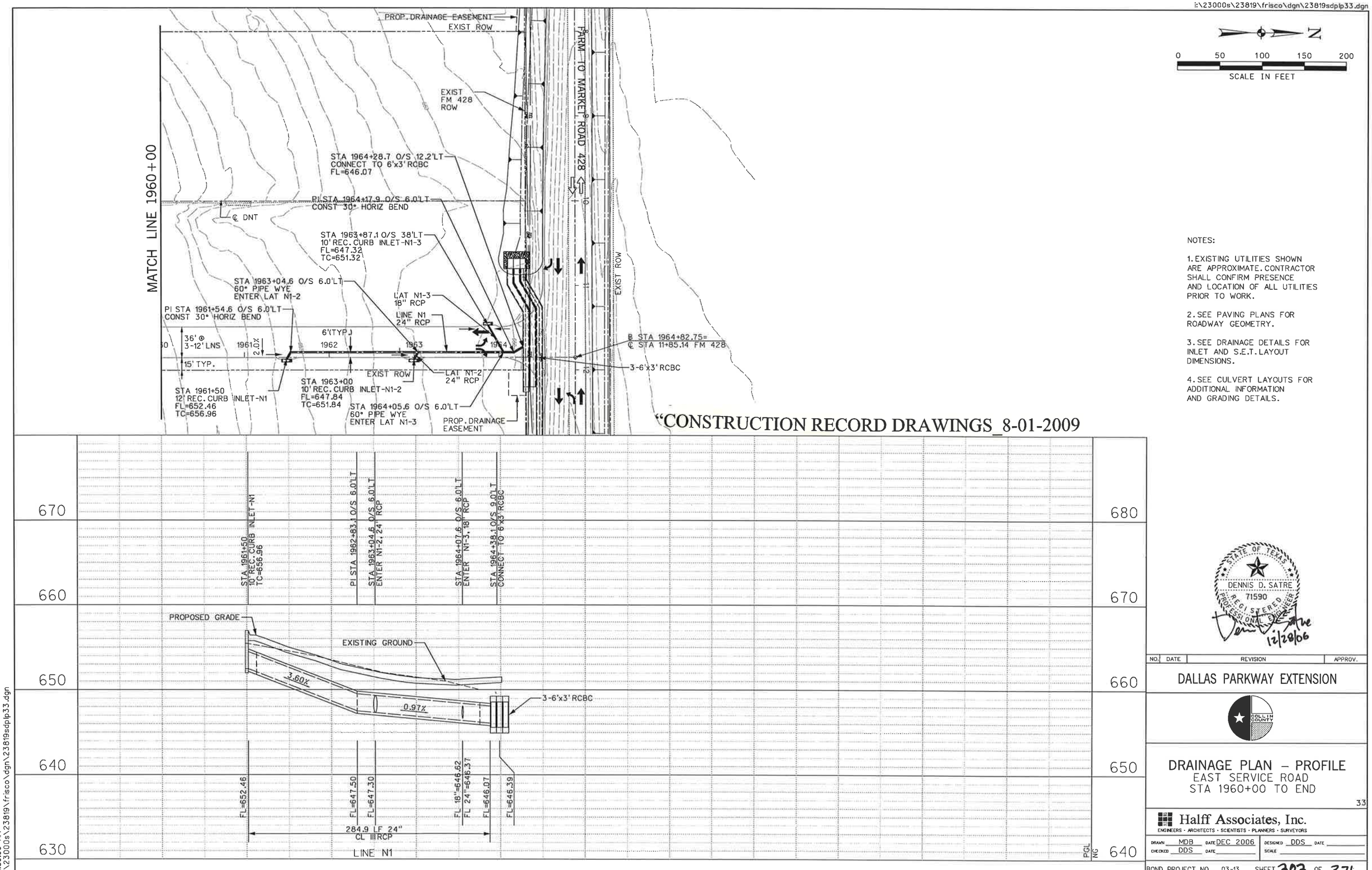

"CONSTRUCTION RECORD DRAWINGS_8-01-2009

0 50 100 150 200
SCALE IN FEET

NOTES:

1. EXISTING UTILITIES SHOWN ARE APPROXIMATE. CONTRACTOR SHALL CONFIRM PRESENCE AND LOCATION OF ALL UTILITIES PRIOR TO WORK.

2. SEE PAVING PLANS FOR ROADWAY GEOMETRY.

3. SEE DRAINAGE DETAILS FOR INLET AND S.E.T. LAYOUT DIMENSIONS.

4. SEE CULVERT LAYOUTS FOR ADDITIONAL INFORMATION AND GRADING DETAILS.

STATE OF TEXAS
DENNIS D. SATRE
71590
REGISTERED PROFESSIONAL ENGINEER
12/28/06

NO.	DATE	REVISION	APPROV.

DALLAS PARKWAY EXTENSION

COLLIN COUNTY

DRAINAGE PLAN – PROFILE
EAST SERVICE ROAD
STA 1960+00 TO END

33

Halff Associates, Inc.
ENGINEERS · ARCHITECTS · SCIENTISTS · PLANNERS · SURVEYORS

DRAWN MDB DATE DEC 2006 DESIGNED DDS DATE
CHECKED DDS DATE SCALE

BOND PROJECT NO. 03-13 SHEET 202 OF 271

P-200612-01

12/28/2006 11:59:33 AM

11:59:33 AM
i:\23000s\23819\frisco\dgn\23819sdplp33.dgn

I:\23000s\23819\FRISCO\DGN\23819SDPLP39.dgn

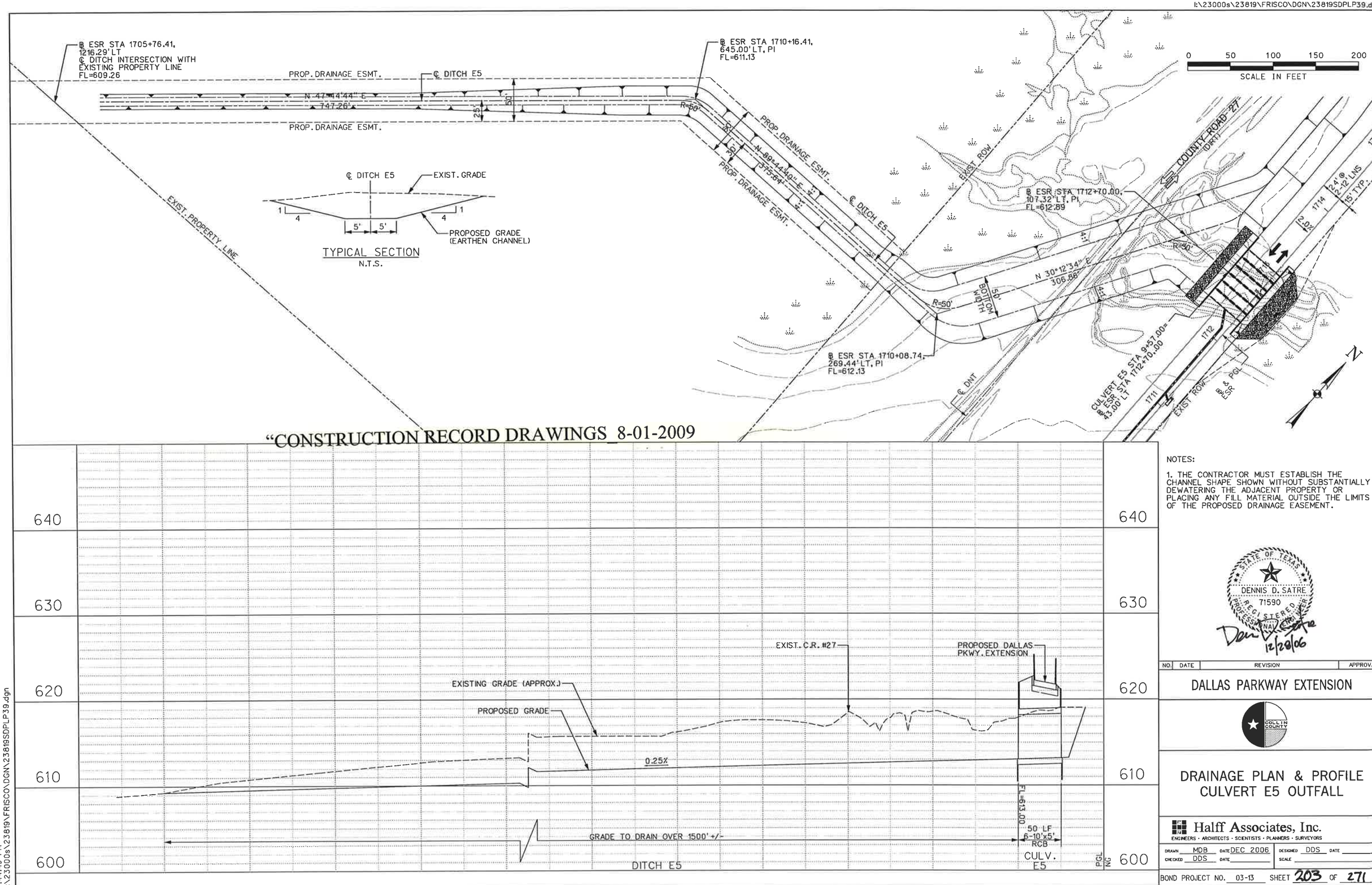

"CONSTRUCTION RECORD DRAWINGS_8-01-2009

NOTES:

1. THE CONTRACTOR MUST ESTABLISH THE CHANNEL SHAPE SHOWN WITHOUT SUBSTANTIALLY DEWATERING THE ADJACENT PROPERTY OR PLACING ANY FILL MATERIAL OUTSIDE THE LIMITS OF THE PROPOSED DRAINAGE EASEMENT.

STATE OF TEXAS
DENNIS D. SATRE
71590
REGISTERED PROFESSIONAL ENGINEER
12/28/06

NO.	DATE	REVISION	APPROV.

DALLAS PARKWAY EXTENSION

COLLIN COUNTY

DRAINAGE PLAN & PROFILE
CULVERT E5 OUTFALL

Halff Associates, Inc.
ENGINEERS · ARCHITECTS · SCIENTISTS · PLANNERS · SURVEYORS

DRAWN MDB DATE DEC 2006 DESIGNED DDS DATE
CHECKED DDS DATE SCALE

BOND PROJECT NO. 03-13 SHEET 203 OF 271

3:44:49 PM
I:\23000s\23819\FRISCO\DGN\23819SDPLP39.dgn

12/28/2006 3:44:49 PM

P200612-01

i:\23000s\23819\FRISCO\DGN\23819FRSTM01.dgn

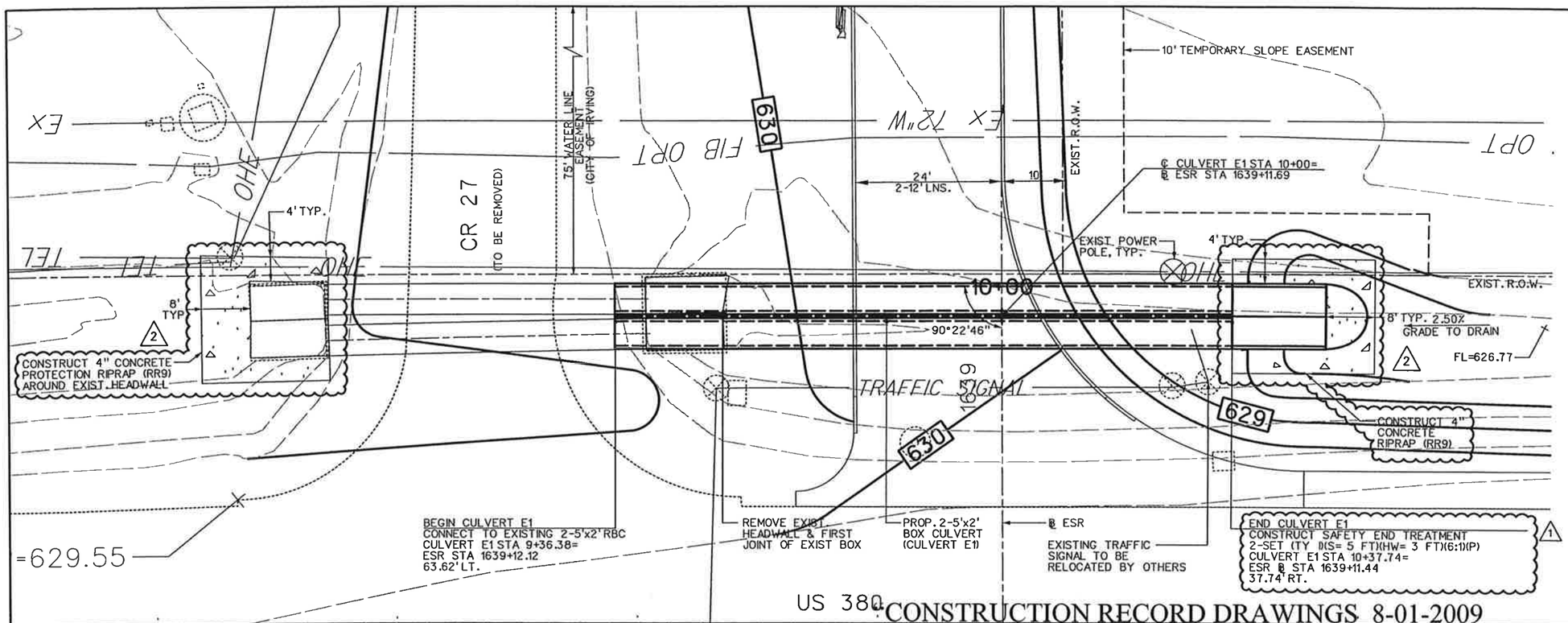

CONSTRUCTION RECORD DRAWINGS 8-01-2009

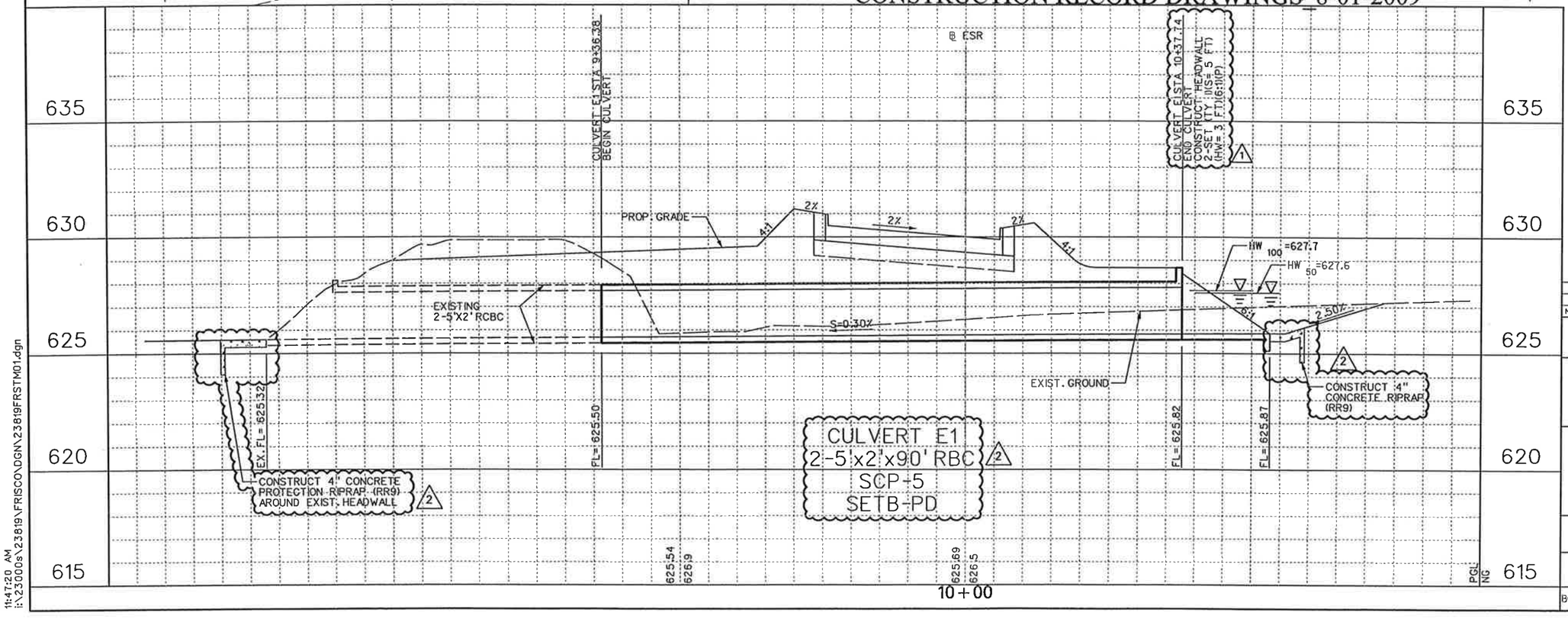

0 10 20 30 40
SCALE IN FEET

N

HYDRAULIC DATA

Q_{50}= 53 cfs	Q_{100}= 58 cfs
V_{50}= 2.9 fps	V_{100}= 3.17 fps
TW_{50}= 627.2	TW_{100}= 627.2
HW_{50}= 627.6	HW_{100}= 627.7
s = 0.00072	s = 0.00086

NOTES:

1. EXISTING UTILITIES SHOWN ARE APPROXIMATE. CONTRACTOR SHALL CONFIRM PRESENCE AND LOCATION OF ALL UTILITIES PRIOR TO WORK.
2. SEE PAVING PLANS FOR ROADWAY GEOMETRY.
3. CONSTRUCTION OF CULVERT MUST BE BY PRECAST BOX SECTIONS
4. CONTRACTOR SHALL COORDINATE TEMPORARY RELOCATION OF GUY WIRES AND POWERPOLE BRACING.

STATE OF TEXAS
DENNIS D. SATRE
71590
REGISTERED PROFESSIONAL ENGINEER
3-30-07

NO.	DATE	REVISION	APPROV.
2	3/30/07	TxDOT DRIVEWAY PERMIT - C.O. #1	D.SATRE
1	1/19/07	ADDENDUM #1	D.SATRE

DALLAS PARKWAY EXTENSION

COLLIN COUNTY

CULVERT LAYOUT
CULVERT E1

Halff Associates, Inc.
ENGINEERS · ARCHITECTS · SCIENTISTS · PLANNERS · SURVEYORS

DRAWN MR DATE DEC 2006 DESIGNED ML DATE
CHECKED DDS DATE SCALE 1"=20'(H), 1"=5'(V)

BOND PROJECT NO. 03-13 SHEET 204 OF 271

11:47:20 AM
i:\23000s\23819\FRISCO\DGN\23819FRSTM01.dgn

5/8/2007 11:47:20 AM

P-200612-01

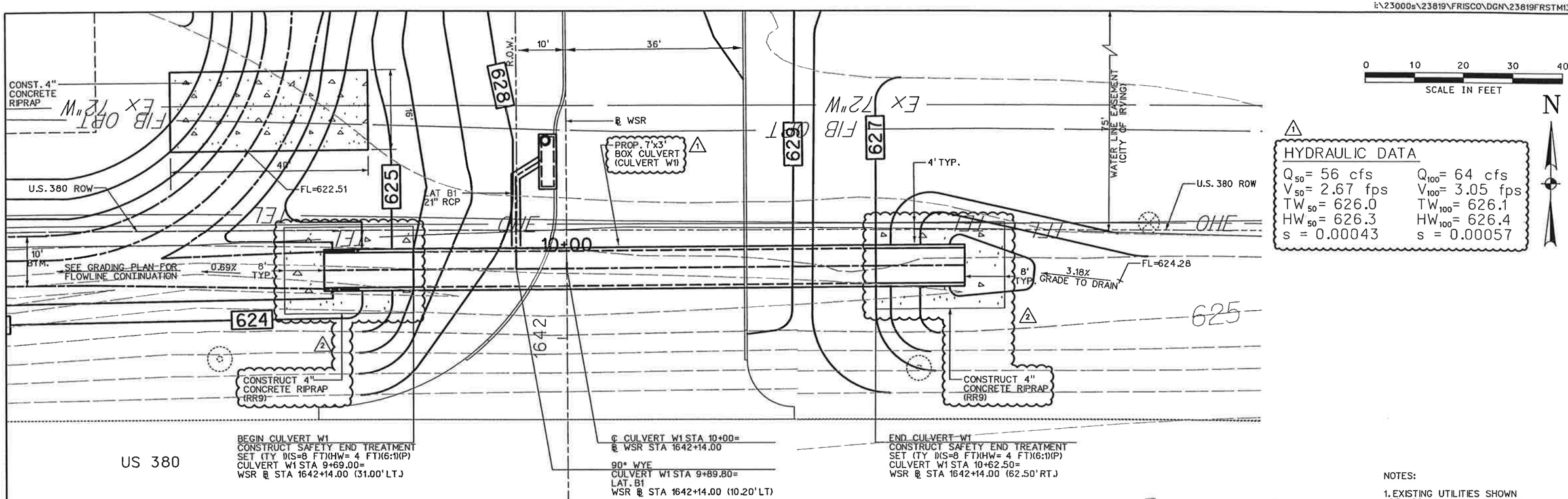

0 10 20 30 40
SCALE IN FEET

N

1

HYDRAULIC DATA

Q_{50}= 56 cfs	Q_{100}= 64 cfs
V_{50}= 2.67 fps	V_{100}= 3.05 fps
TW_{50}= 626.0	TW_{100}= 626.1
HW_{50}= 626.3	HW_{100}= 626.4
s = 0.00043	s = 0.00057

NOTES:

1. EXISTING UTILITIES SHOWN ARE APPROXIMATE. CONTRACTOR SHALL CONFIRM PRESENCE AND LOCATION OF ALL UTILITIES PRIOR TO WORK.

2. SEE PAVING PLANS FOR ROADWAY GEOMETRY.

"CONSTRUCTION RECORD DRAWINGS_8-01-2009

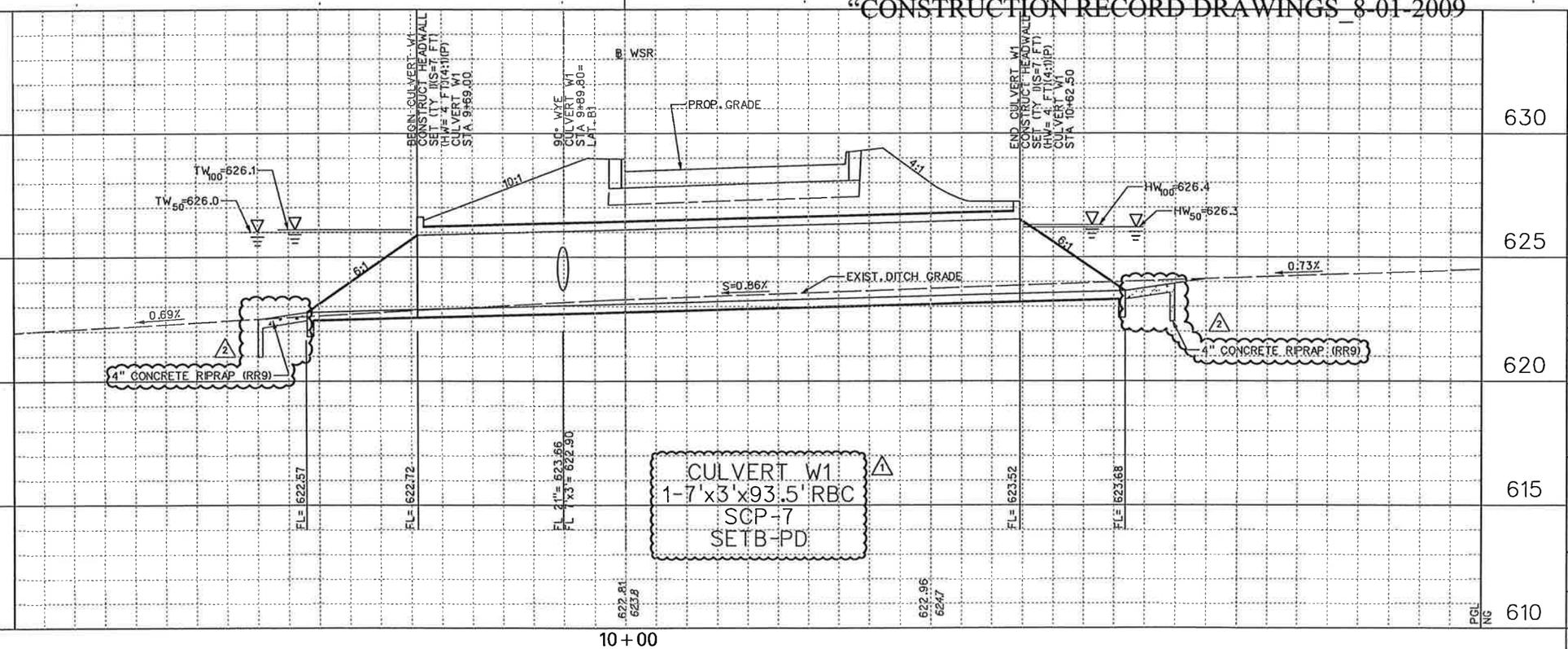

NO.	DATE	REVISION	APPROV.
2	3/30/07	TxDOT DRIVEWAY PERMIT - C.O. #1	D. SATRE
1	1/19/07	ADDENDUM #1	D. SATRE

DALLAS PARKWAY EXTENSION

COLLIN COUNTY

CULVERT LAYOUT
CULVERT W1

Halff Associates, Inc.
ENGINEERS · ARCHITECTS · SCIENTISTS · PLANNERS · SURVEYORS

DRAWN MR DATE DEC 2006 DESIGNED ML DATE
CHECKED DDS DATE SCALE

BOND PROJECT NO. 03-13 SHEET 205 OF 271

STATE OF TEXAS
DENNIS D. SATRE
71590
REGISTERED PROFESSIONAL ENGINEER
3-30-07

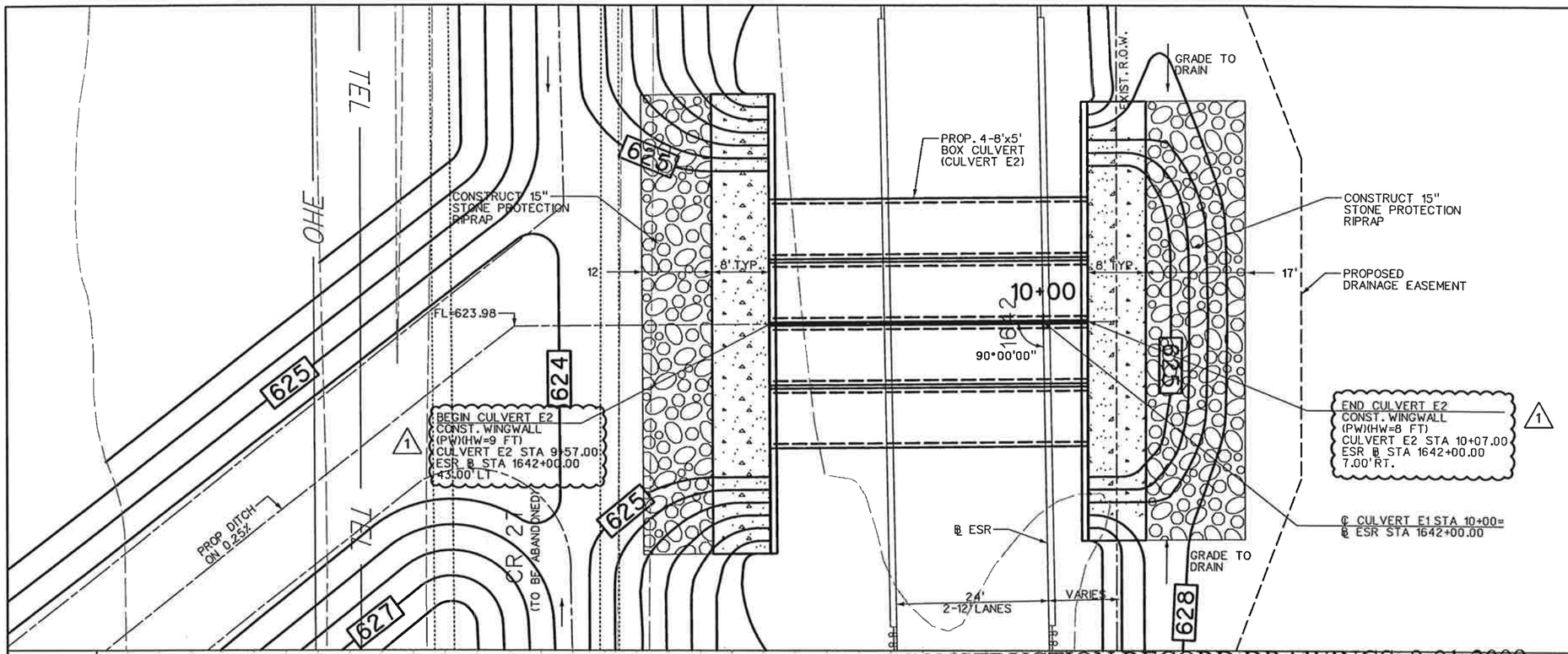

N

HYDRAULIC DATA

Q_{50}= 248 cfs	Q_{100}= 268 cfs
V_{50}= 3.1 fps	V_{100}= 3.22 fps
TW_{50}= 626.6	TW_{100}= 626.7
HW_{50}= 626.9	HW_{100}= 627
s = 0.0004	s = 0.0005

NOTES:

1. EXISTING UTILITIES SHOWN ARE APPROXIMATE. CONTRACTOR SHALL CONFIRM PRESENCE AND LOCATION OF ALL UTILITIES PRIOR TO WORK.

2. SEE PAVING PLANS FOR ROADWAY GEOMETRY.

3. THE DESIGN REQUIREMENTS FOR THIS CULVERT CROSSING ARE MET BY A MULTIPLE 8'x3' BOX CULVERT AND THE COMPUTATIONS PROVIDED ARE BASED ON A 4-8'x3' WITH SOFFIT ELEVATIONS AS SHOWN. AT THE REQUEST OF THE ADJACENT PROPERTY OWNERS, THE FLOW LINE OF THE CULVERT HAS BEEN LOWERED 2' AND SIZE INCREASED TO 8'x5' IN ANTICIPATION OF FUTURE EFFORTS TO LOWER DOWNSTREAM FLOW LINE CONDITIONS.

"CONSTRUCTION RECORD DRAWINGS" 8-01-2009

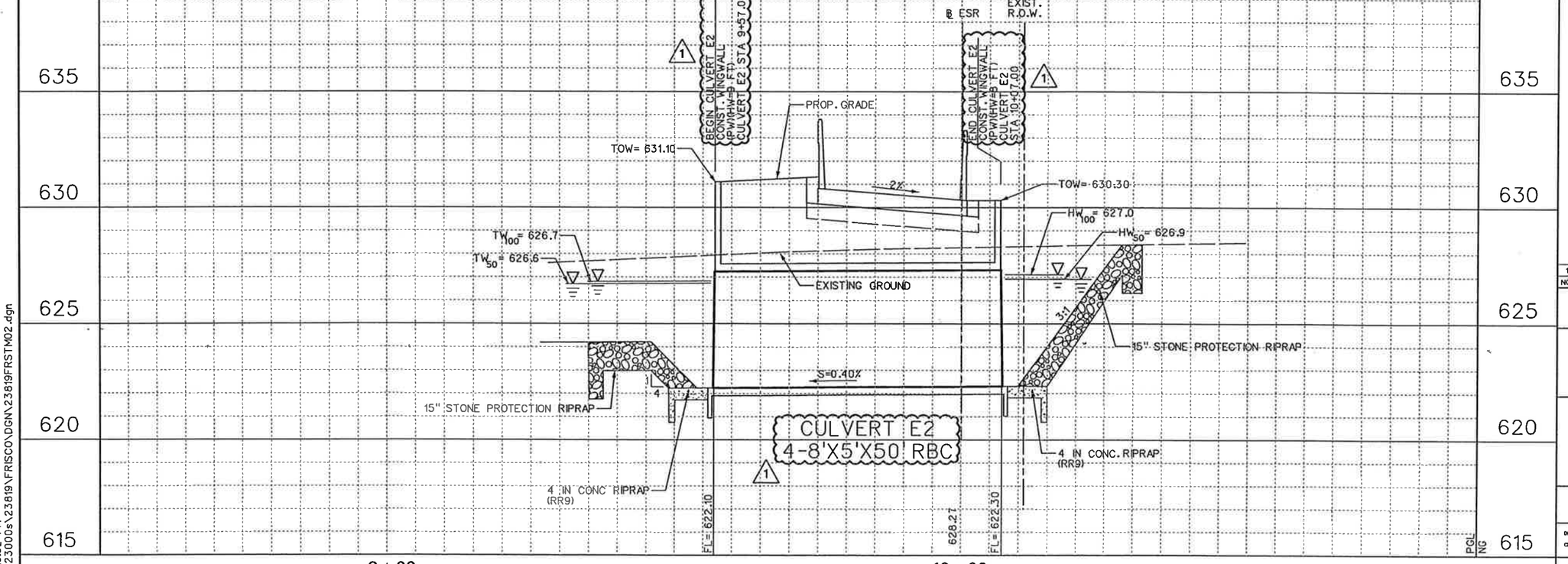

STATE OF TEXAS
DENNIS D. SATRE
71590
REGISTERED PROFESSIONAL ENGINEER
6-01-07

NO.	DATE	REVISION	APPROV.
1	6/1/07	CULVERT E2 & W2 REVISION - C.O. #1	D. SATRE

DALLAS PARKWAY EXTENSION

COLLIN COUNTY

CULVERT LAYOUT
CULVERT E2

Halff Associates, Inc.
ENGINEERS · ARCHITECTS · SCIENTISTS · PLANNERS · SURVEYORS

DRAWN MR	DATE DEC 2006	DESIGNED ML	DATE
CHECKED DDS	DATE	SCALE	

BOND PROJECT NO. 03-13 SHEET 206 OF 271

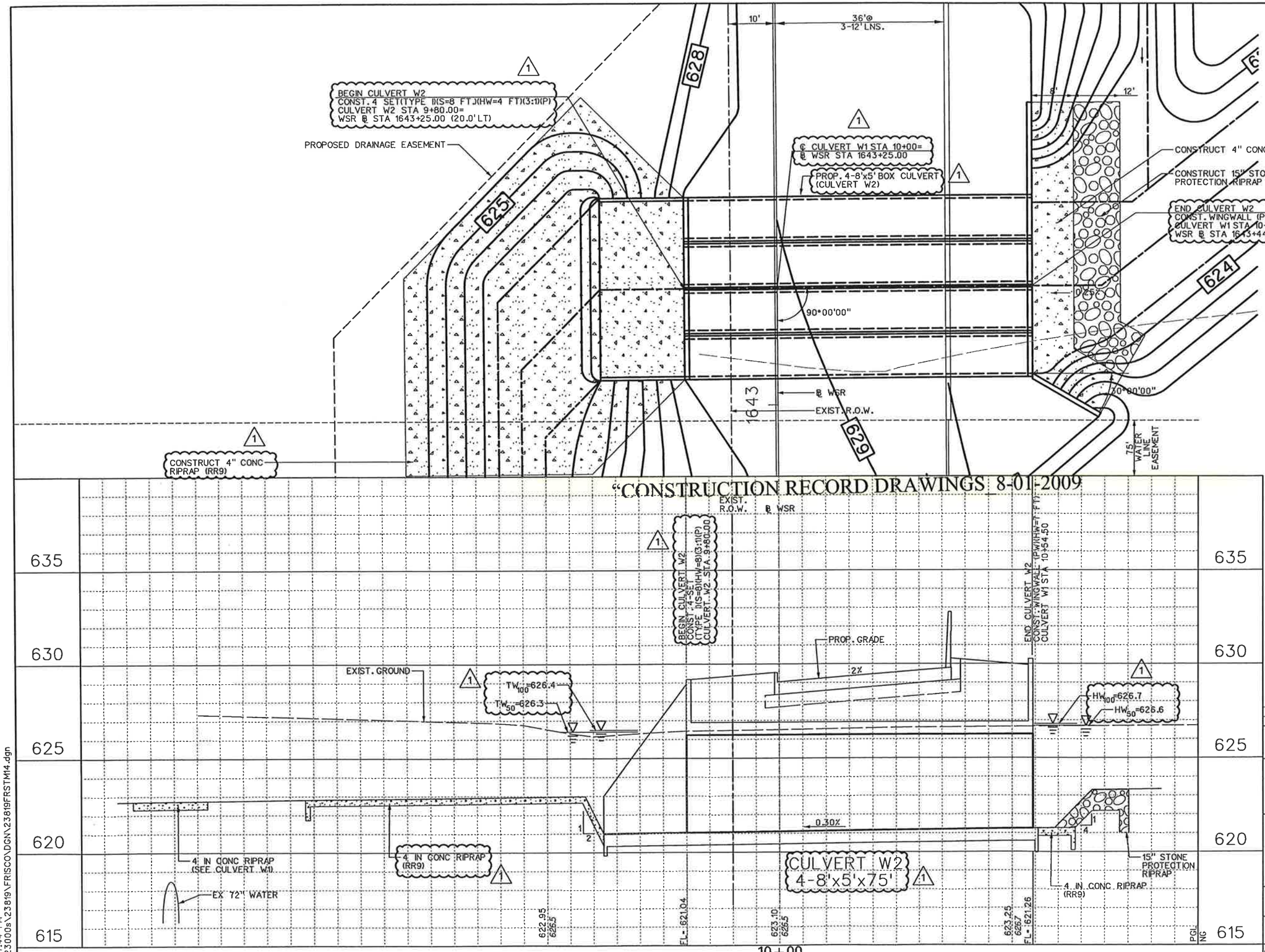

HYDRAULIC DATA

Q_{50}= 280 cfs	Q_{100}= 300 cfs
V_{50}= 2.92 fps	V_{100}= 3.13 fps
TW_{50}= 626.3	TW_{100}= 626.4
HW_{50}= 626.6	HW_{100}= 626.7
S = 0.0005	S = 0.0006

NOTES:

1. EXISTING UTILITIES SHOWN ARE APPROXIMATE. CONTRACTOR SHALL CONFIRM PRESENCE AND LOCATION OF ALL UTILITIES PRIOR TO WORK.

2. SEE PAVING PLANS FOR ROADWAY GEOMETRY.

3. THE DESIGN REQUIREMENTS FOR THIS CULVERT CROSSING ARE MET BY A MULTIPLE 8'x3' BOX CULVERT AND THE COMPUTATIONS PROVIDED ARE BASED ON A 4-8'x3' WITH SOFFIT ELEVATIONS AS SHOWN. AT THE REQUEST OF THE ADJACENT PROPERTY OWNERS, THE FLOW LINE OF THE CULVERT HAS BEEN LOWERED 2' AND SIZE INCREASED TO 8'x5' IN ANTICIPATION OF FUTURE EFFORTS TO LOWER DOWNSTREAM FLOW LINE CONDITIONS.

"CONSTRUCTION RECORD DRAWINGS 8-01-2009

NO.	DATE	REVISION	APPROV.
1	6/1/07	CULVERT E2 & W2 REVISION - C.O. #1	D. SATRE

DENNIS D. SATRE 71590 REGISTERED PROFESSIONAL ENGINEER 6-1-07

DALLAS PARKWAY EXTENSION

COLLIN COUNTY

CULVERT LAYOUT
CULVERT W2

Halff Associates, Inc.
ENGINEERS · ARCHITECTS · SCIENTISTS · PLANNERS · SURVEYORS

DRAWN MR DATE DEC 2006 DESIGNED ML DATE
CHECKED DDS DATE SCALE

BOND PROJECT NO. 03-13 SHEET 207 OF 271

3:27:44 PM
i:\23000s\23819\FRISCO\DGN\23819FRSTM14.dgn

8/3/2007 3:27:44 PM

P-200612-01

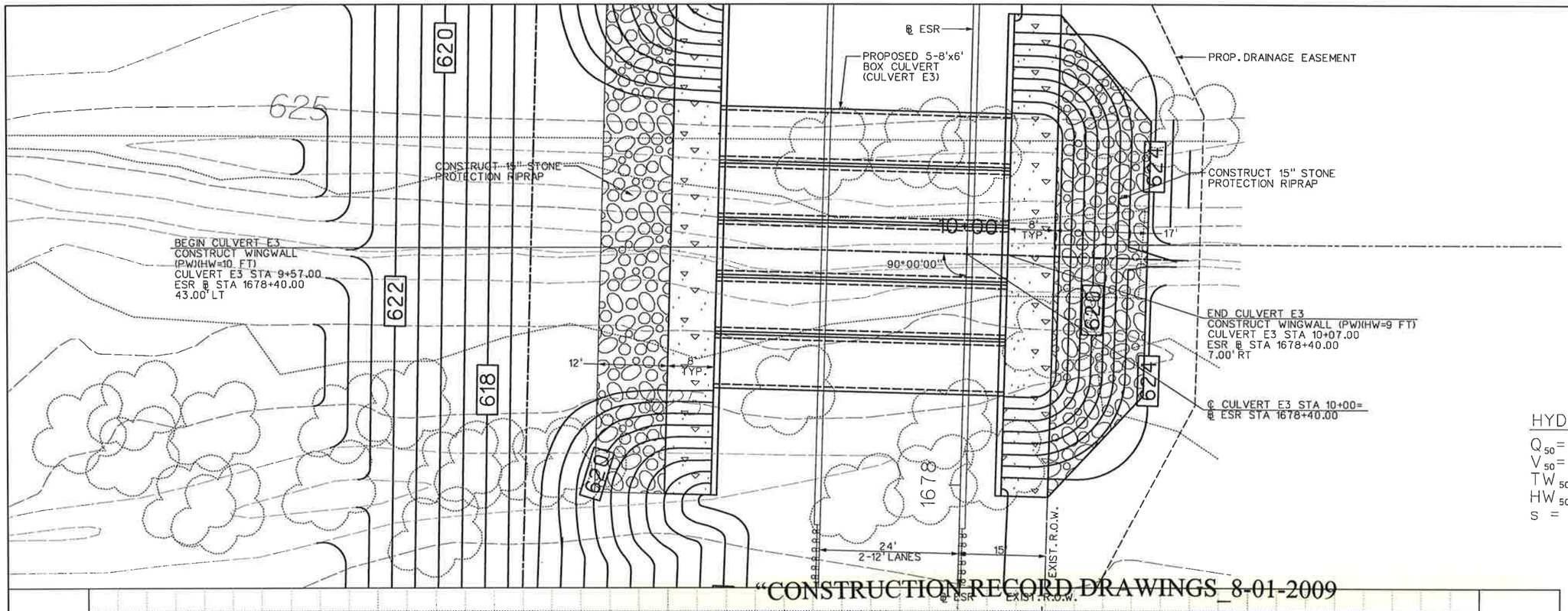

HYDRAULIC DATA

Q_{50}= 2010 cfs	Q_{100}= 2280 cfs
V_{50}= 8.38 fps	V_{100}= 9.66 fps
TW_{50}= 622	TW_{100}= 622.3
HW_{50}= 624	HW_{100}= 624.6
s = 0.0022	s = 0.0029

"CONSTRUCTION RECORD DRAWINGS_8-01-2009

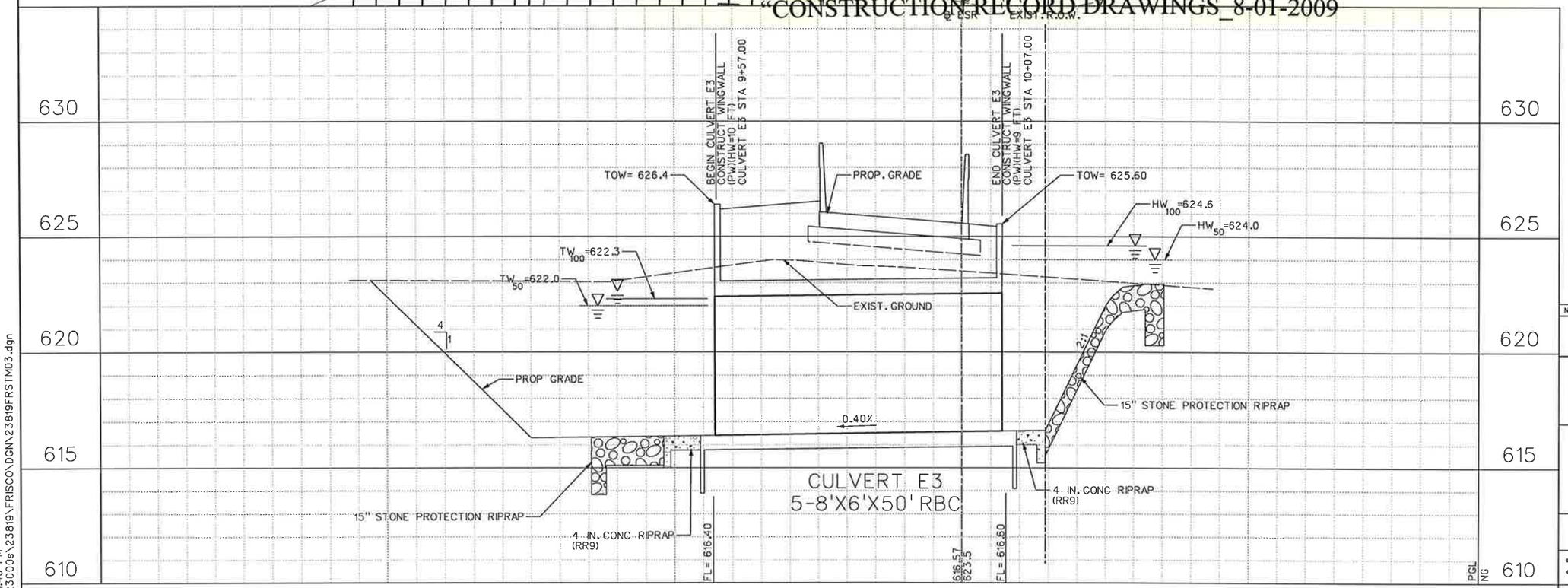

NOTES:

1. EXISTING UTILITIES SHOWN ARE APPROXIMATE. CONTRACTOR SHALL CONFIRM PRESENCE AND LOCATION OF ALL UTILITIES PRIOR TO WORK.

2. SEE PAVING PLANS FOR ROADWAY GEOMETRY.

STATE OF TEXAS
DENNIS D. SATRE
71590
PROFESSIONAL ENGINEER
12/28/06

NO.	DATE	REVISION	APPROV.

DALLAS PARKWAY EXTENSION

COLLIN COUNTY

CULVERT LAYOUT
CULVERT E3

Halff Associates, Inc.
ENGINEERS · ARCHITECTS · SCIENTISTS · PLANNERS · SURVEYORS

DRAWN MR	DATE DEC 2006	DESIGNED ML	DATE
CHECKED DDS	DATE	SCALE	

BOND PROJECT NO. 03-13 SHEET 208 OF 271

P-200612-01

I:\23000s\23819\FRISCO\DGN\23819FRSTM04.dgn

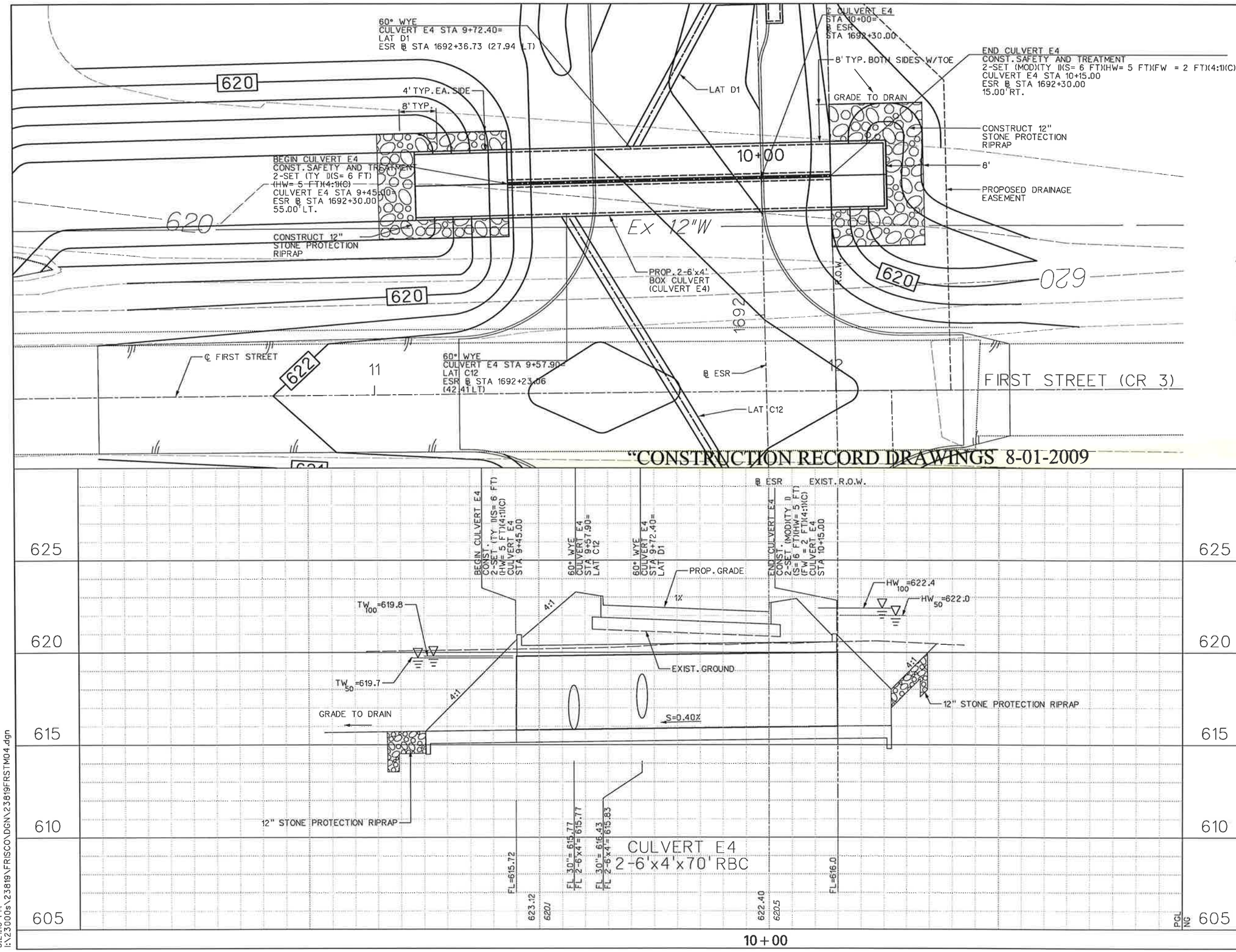

"CONSTRUCTION RECORD DRAWINGS 8-01-2009

0 10 20 30 40
SCALE IN FEET

N

HYDRAULIC DATA

Q_{50}= 412 cfs	Q_{100}= 447 cfs
V_{50}= 8.58 fps	V_{100}= 9.31 fps
TW_{50}= 619.7	TW_{100}= 619.8
HW_{50}= 622	HW_{100}= 622.4
s = 0.0038	s = 0.0044

NOTES:

1. EXISTING UTILITIES SHOWN ARE APPROXIMATE. CONTRACTOR SHALL CONFIRM PRESENCE AND LOCATION OF ALL UTILITIES PRIOR TO WORK.

2. SEE PAVING PLANS FOR ROADWAY GEOMETRY.

3. SEE DRAINAGE PLAN PROFILE FOR LATERAL INFORMATION

STATE OF TEXAS
DENNIS D. SATRE
71590
REGISTERED PROFESSIONAL ENGINEER
12/28/06

NO.	DATE	REVISION	APPROV.

DALLAS PARKWAY EXTENSION

COLLIN COUNTY

CULVERT LAYOUT
CULVERT E4

Halff Associates, Inc.
ENGINEERS · ARCHITECTS · SCIENTISTS · PLANNERS · SURVEYORS

DRAWN MR DATE DEC 2006 DESIGNED ML DATE
CHECKED DDS DATE SCALE

BOND PROJECT NO. 03-13 SHEET 209 OF 271

P-200612-01

12/28/2006 6:21:16 PM

6:21:16 PM
I:\23000s\23819\FRISCO\DGN\23819FRSTM04.dgn

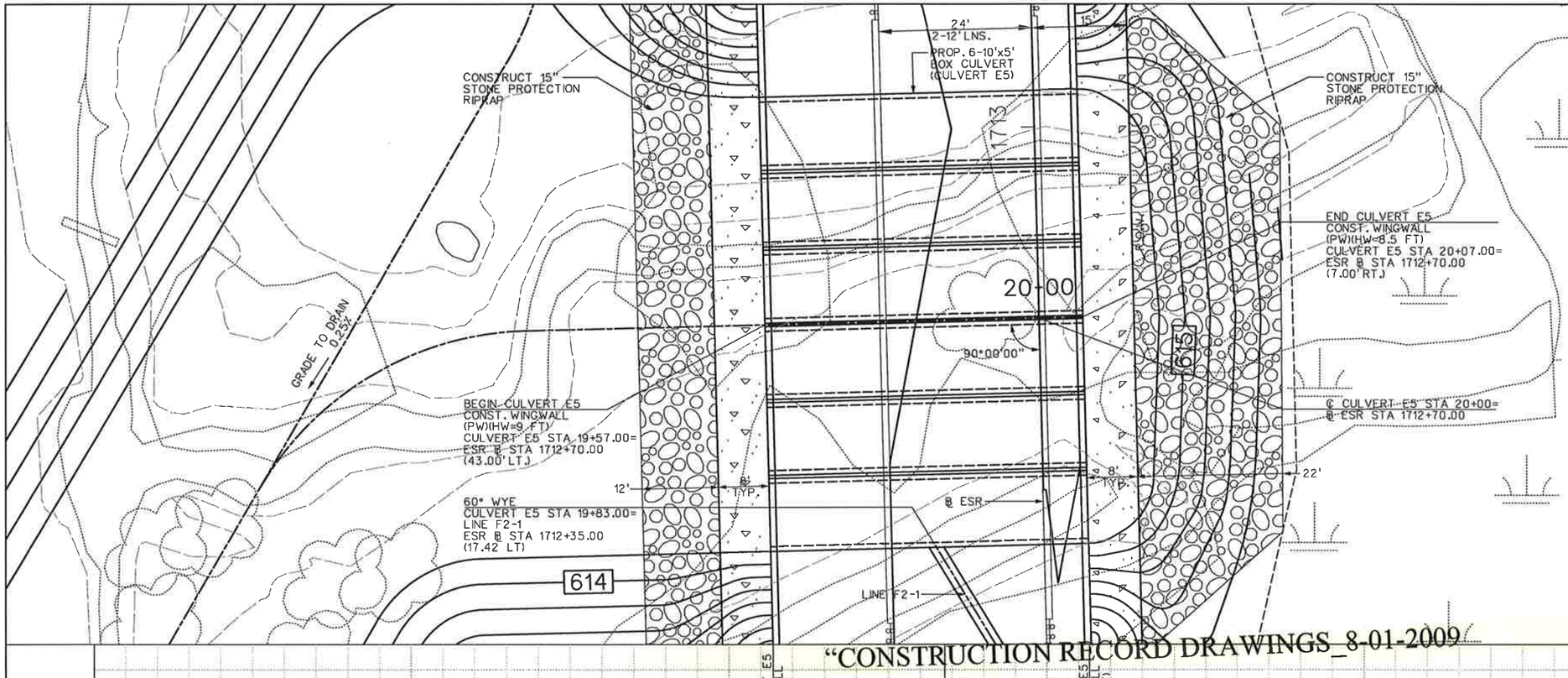

0 10 20 30 40
SCALE IN FEET

N

HYDRAULIC DATA

Q_{50}= 2200 cfs	Q_{100}= 2325 cfs
V_{50}= 7.33 fps	V_{100}= 7.75 fps
TW_{50}= 618.5	TW_{100}= 618.7
HW_{50}= 619.2	HW_{100}= 619.5
s = 0.0018	s = 0.0020

NOTES:

1. EXISTING UTILITIES SHOWN ARE APPROXIMATE. CONTRACTOR SHALL CONFIRM PRESENCE AND LOCATION OF ALL UTILITIES PRIOR TO WORK.

2. SEE PAVING PLANS FOR ROADWAY GEOMETRY.

3. SEE DRAINAGE PLAN & PROFILE-CULVERT E5 OUTFALL FOR ADDITIONAL GRADING INFORMATION.

"CONSTRUCTION RECORD DRAWINGS_8-01-2009"

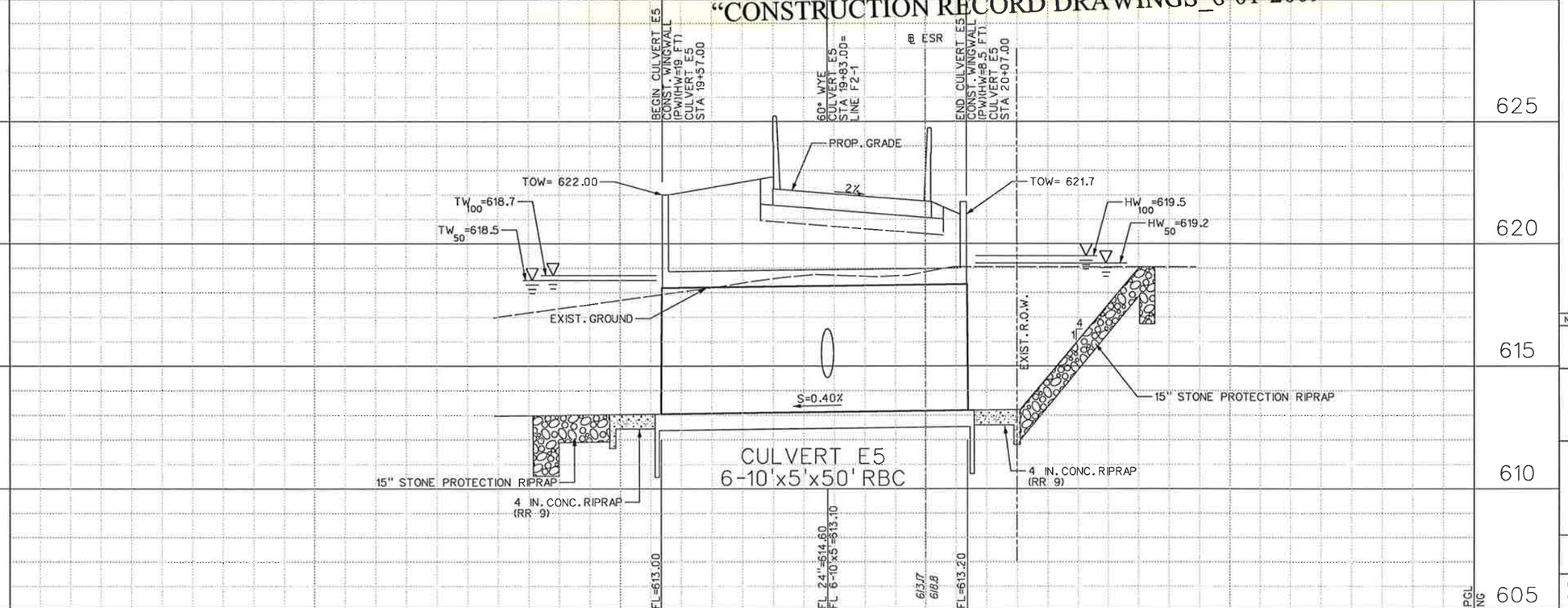

NO.	DATE	REVISION	APPROV.

DALLAS PARKWAY EXTENSION

COLLIN COUNTY

CULVERT LAYOUT
CULVERT E5

Halff Associates, Inc.
ENGINEERS · ARCHITECTS · SCIENTISTS · PLANNERS · SURVEYORS

DRAWN MR	DATE DEC 2006	DESIGNED ML	DATE
CHECKED DDS	DATE	SCALE	

BOND PROJECT NO. 03-13 SHEET 210 OF 271

STATE OF TEXAS
DENNIS D. SATRE
71590
REGISTERED PROFESSIONAL ENGINEER
12/28/06

4:11:20 PM
I:\23000s\23819\FRISCO\DGN\23819FRSTM05.dgn

12/28/2006 4:11:20 PM

P-200612-01

I:\23000s\23819\FRISCO\DGN\23819FRSTM06.dgn

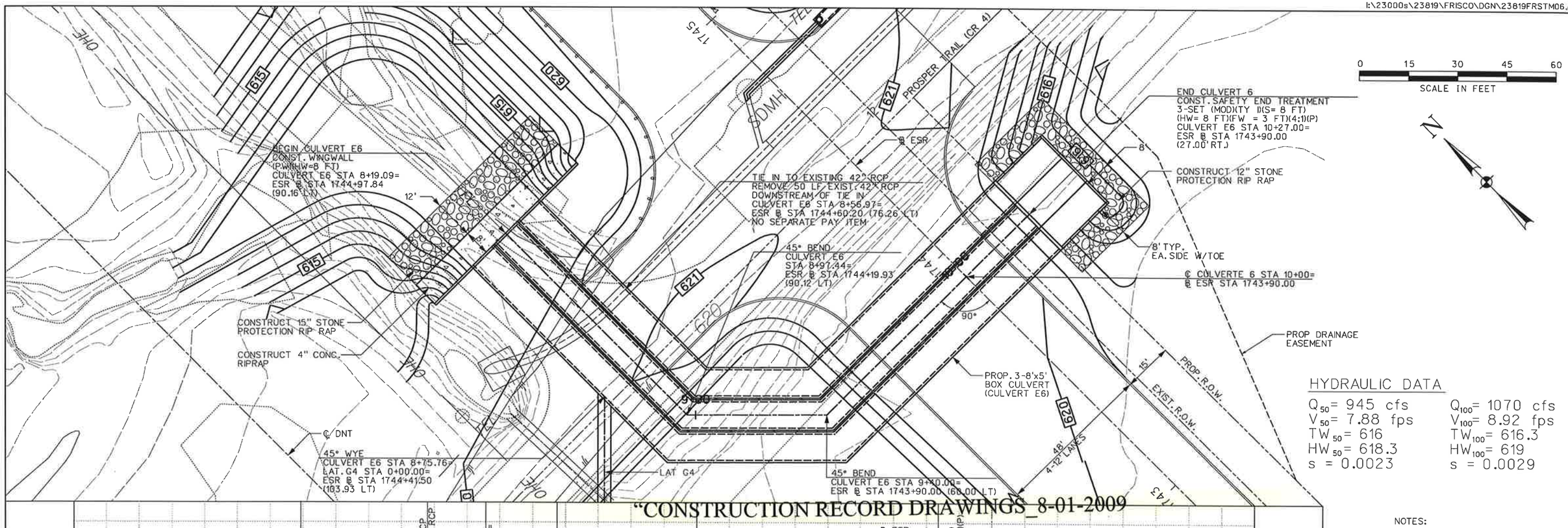

0 15 30 45 60
SCALE IN FEET

N

HYDRAULIC DATA

Q_{50}= 945 cfs	Q_{100}= 1070 cfs
V_{50}= 7.88 fps	V_{100}= 8.92 fps
TW_{50}= 616	TW_{100}= 616.3
HW_{50}= 618.3	HW_{100}= 619
s = 0.0023	s = 0.0029

"CONSTRUCTION RECORD DRAWINGS_8-01-2009

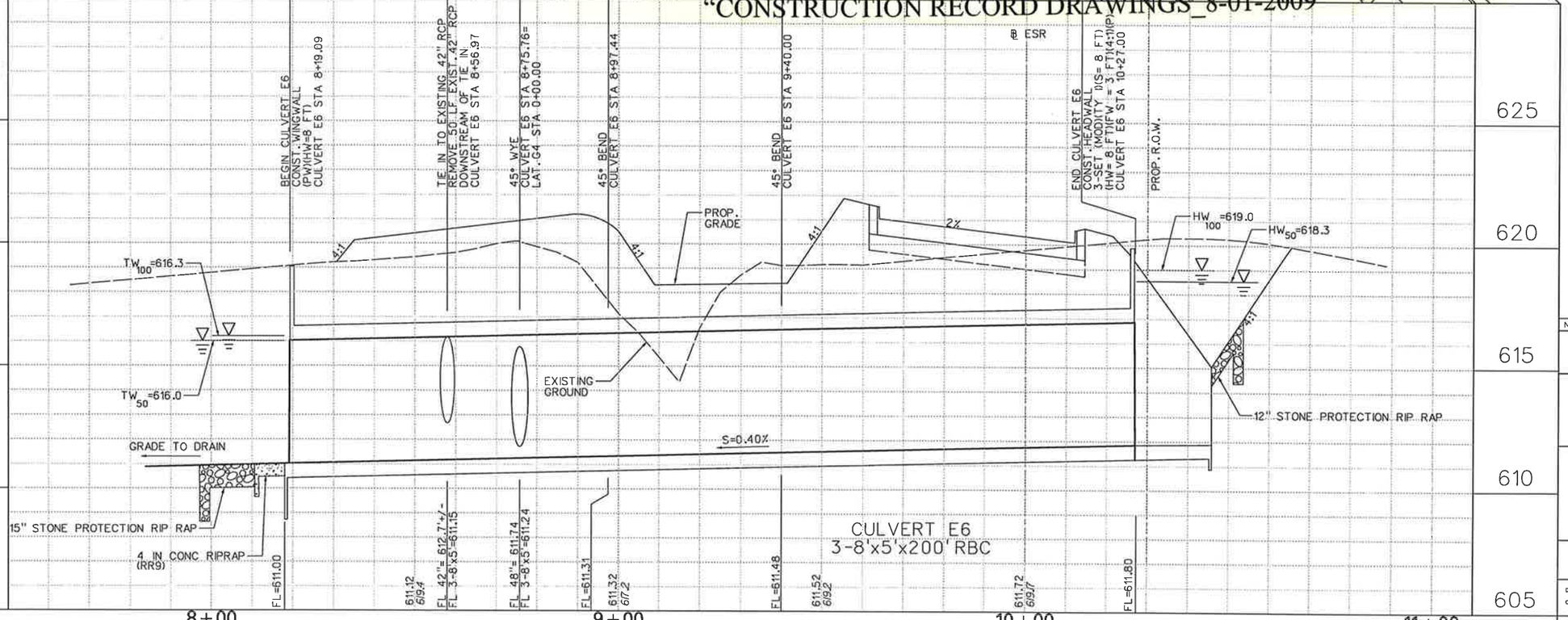

NOTES:

1. EXISTING UTILITIES SHOWN ARE APPROXIMATE. CONTRACTOR SHALL CONFIRM PRESENCE AND LOCATION OF ALL UTILITIES PRIOR TO WORK.

2. SEE PAVING PLANS FOR ROADWAY GEOMETRY.

STATE OF TEXAS
DENNIS D. SATRE
71590
REGISTERED PROFESSIONAL ENGINEER
12/28/06

NO.	DATE	REVISION	APPROV.

DALLAS PARKWAY EXTENSION

COLLIN COUNTY

CULVERT LAYOUTS
CULVERT E6

Halff Associates, Inc.
ENGINEERS · ARCHITECTS · SCIENTISTS · PLANNERS · SURVEYORS

DRAWN MR DATE DEC 2006 | DESIGNED ML DATE
CHECKED DDS DATE | SCALE

BOND PROJECT NO. 03-13 SHEET 211 OF 271

P-2006-12-01

4:34:30 PM
I:\23000s\23819\FRISCO\DGN\23819FRSTM06.dgn
12/28/2006 4:34:30 PM

I:\23000s\23819\FRISCO\DGN\23819FRSTM07.dgn

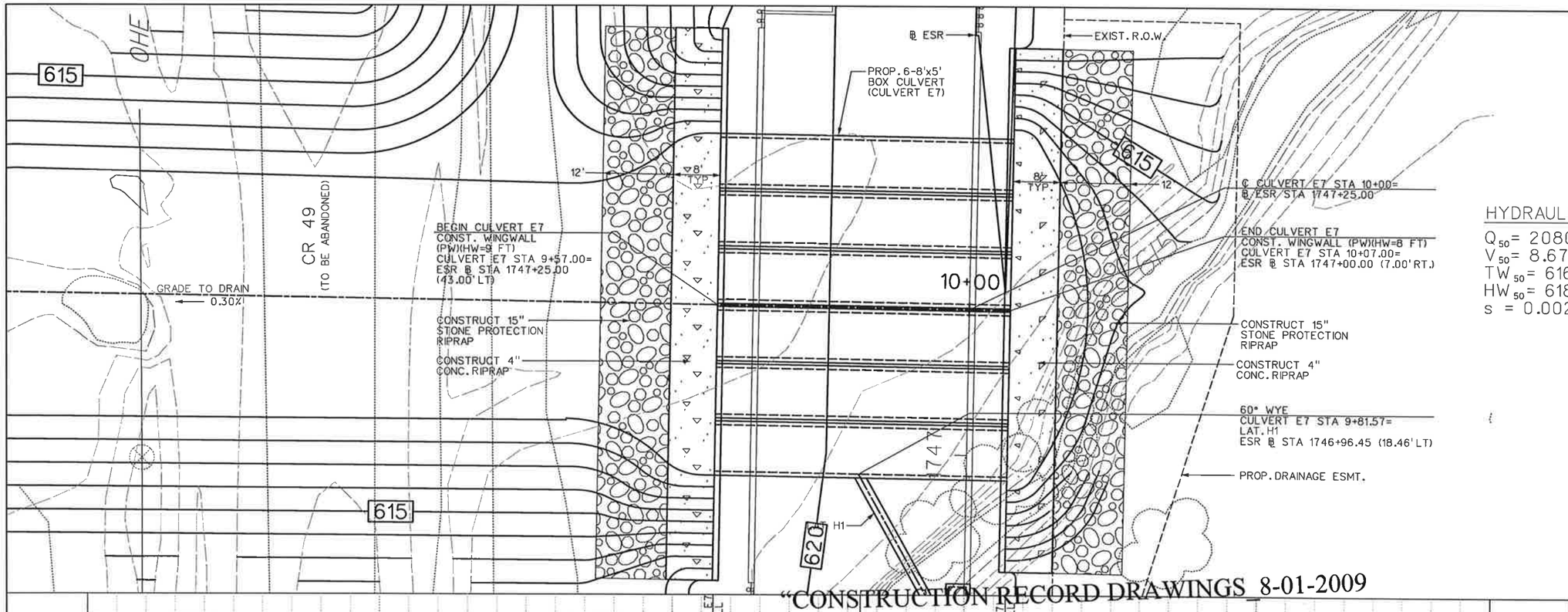

HYDRAULIC DATA

Q_{50}= 2080 cfs	Q_{100}= 2380 cfs
V_{50}= 8.67 fps	V_{100}= 9.92 fps
TW_{50}= 616.3	TW_{100}= 616.7
HW_{50}= 618.1	HW_{100}= 619
s = 0.0028	s = 0.0036

"CONSTRUCTION RECORD DRAWINGS_8-01-2009

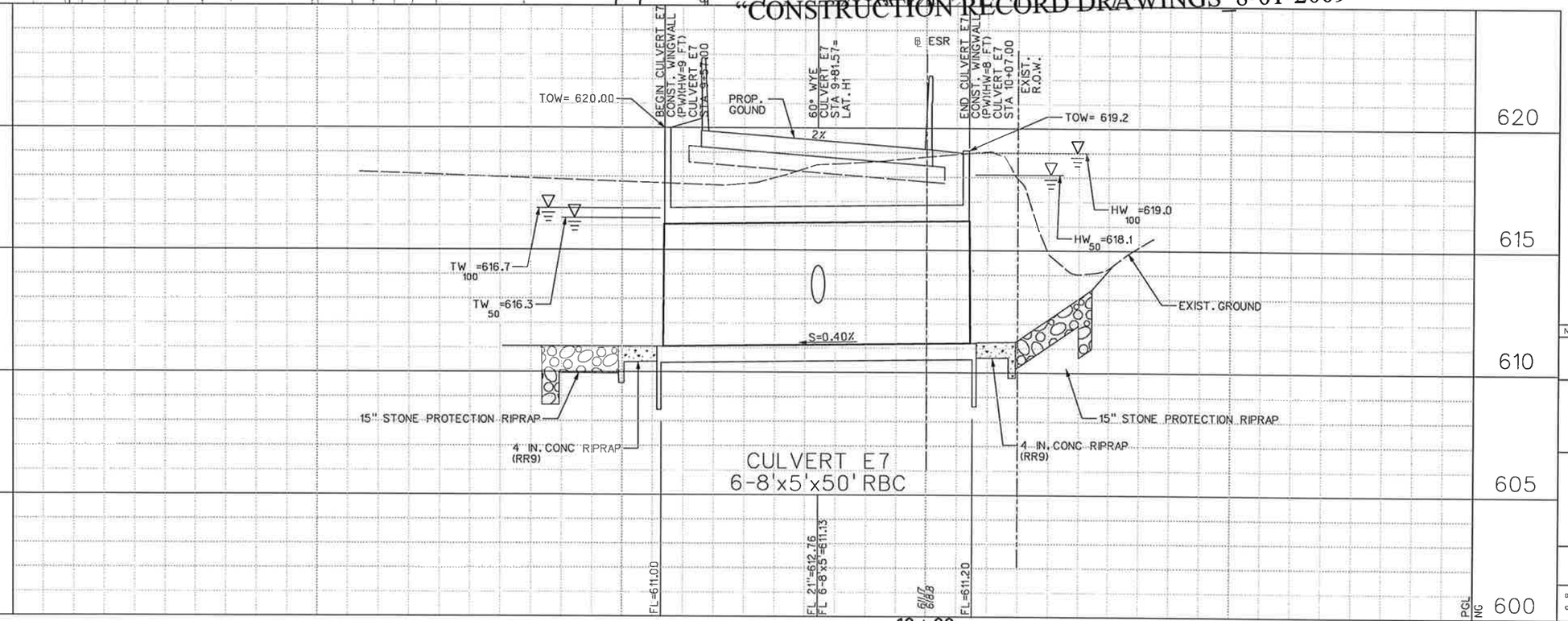

NOTES:

1. EXISTING UTILITIES SHOWN ARE APPROXIMATE. CONTRACTOR SHALL CONFIRM PRESENCE AND LOCATION OF ALL UTILITIES PRIOR TO WORK.

2. SEE PAVING PLANS FOR ROADWAY GEOMETRY.

3. SEE DRAINAGE PLAN & PROFILE FOR CONNECTING LATERAL INFORMATION AND OUTFALL GRADING INFORMATION

STATE OF TEXAS
DENNIS D. SATRE
71590
REGISTERED PROFESSIONAL ENGINEER
12/28/06

NO.	DATE	REVISION	APPROV.

DALLAS PARKWAY EXTENSION

COLLIN COUNTY

CULVERT LAYOUT
CULVERT E7

Halff Associates, Inc.
ENGINEERS · ARCHITECTS · SCIENTISTS · PLANNERS · SURVEYORS

DRAWN MR DATE DEC 2006 | DESIGNED ML DATE
CHECKED DDS DATE | SCALE

BOND PROJECT NO. 03-13 SHEET 212 OF 497

P-2006-12-01

4:38:20 PM
I:\23000s\23819\FRISCO\DGN\23819FRSTM07.dgn
12/28/2006 4:38:20 PM

I:\23000s\23819\FRISCO\DGN\23819FRSTM08.dgn

FRONTIER PARKWAY (CR 5)

PROP. 2-10'x6' BOX CULVERT (CULVERT E8)

℄ ESR

END AND CAP 2-10'x6' RBC FOR FUTURE EXTENSION CULVERT E8 STA 9+37.00

℄ CULVERT E8 STA 10+00= ℄ ESR STA 1796+80.00

179'

10+00

BEGIN CULVERT E8 CONST. WINGWALL (PW)(HW=8 FT) FOR 2-10'x6' RBC CULVERT E8 STA 9+33.00= ESR ℄ STA 1796+80.00 (67.00' LT.)

CONSTRUCT 15" STONE PROTECTION RIPRAP

CONSTRUCT 4" CONC. RIPRAP

60° WYE CULVERT E8 STA 9+86.03= LAT. H14 ESR ℄ STA 1796+56.75 (13.97' LT)

LAT. H14

PROP. 2-10'x6' BOX CULVERT (CULVERT E8)

EXIST. R.O.W.

PROP. R.O.W.

PROP. DRAINAGE EASEMENT

END AND CAP 2-10'x6' RBC FOR FUTURE EXTENSION CULVERT E8 STA 10+33.00

END CULVERT E8 CONST. WINGWALL (PW)(HW=8 FT) FOR 2-10'x6' RBC CULVERT E8 STA 10+37.00= ESR ℄ STA 1796+80.00 (37.00' RT.)

CONSTRUCT 15" STONE PROTECTION RIPRAP

CONSTRUCT 4" CONC. RIPRAP

0 10 20 30 40
SCALE IN FEET

N

HYDRAULIC DATA

Q_{50}= 2360 cfs	Q_{100}= 2535 cfs
V_{50}= 9.83 fps	V_{100}= 10.56 fps
TW_{50}= 617.2	TW_{100}= 617.4
HW_{50}= 619.7	HW_{100}= 620.3
s = 0.0027	s = 0.0031

NOTES:

1. EXISTING UTILITIES SHOWN ARE APPROXIMATE. CONTRACTOR SHALL CONFIRM PRESENCE AND LOCATION OF ALL UTILITIES PRIOR TO WORK.

2. SEE PAVING PLANS FOR ROADWAY GEOMETRY.

3. SEE DRAINAGE PLAN & PROFILE FOR LATERAL INFORMATION.

"CONSTRUCTION RECORD DRAWINGS 8-01-2009

620 615 610 605 600

BEGIN CULVERT E8 CONST. WINGWALL (PW)(HW=8 FT) FOR 2-10'x6' RBC CULVERT E8 STA 9+33.00

END AND CAP 2-10'x6' RBC FOR FUTURE EXTENSION CULVERT E8 STA 9+37.00

PROP. GRADE

60° WYE CULVERT E8 STA 9+86.03= LAT. H14

℄ ESR

EXIST. R.O.W.

PROP. R.O.W.

END AND CAP 2-10'x6' RBC FOR FUTURE EXTENSION CULVERT E8 STA 10+33.00

END CULVERT E8 CONST. WINGWALL (PW)(HW=8 FT) FOR 2-10'x6' RBd CULVERT E8 STA 10+25.00

HW_{100}=620.3

HW_{50}=619.7

TW_{100}= 617.4

TW_{50}= 617.2

EXIST. GROUND

0.33%

15" STONE PROTECTION RIPRAP

4 IN CONC RIPRAP (RR9)

15" STONE PROTECTION RIPRAP

4 IN CONC RIPRAP (RR9)

CULVERT E8
2-10'x6'x104' RBC
2-10'x6'x96' RBC

R.O.W.

FL= 611.11

FL= 611.12

FL= 611.49

FL= 611.50

FL 21"= 613.50
FL 4-10'x6'= 611.38

614.15
6/4/5

614.17
6/4/7

PGL NG

10+00

STATE OF TEXAS
DENNIS D. SATRE
71590
REGISTERED PROFESSIONAL ENGINEER
12/28/06

NO.	DATE	REVISION	APPROV.

DALLAS PARKWAY EXTENSION

COLLIN COUNTY

CULVERT LAYOUT
CULVERT E8

Halff Associates, Inc.
ENGINEERS · ARCHITECTS · SCIENTISTS · PLANNERS · SURVEYORS

DRAWN MR DATE DEC 2006 | DESIGNED ML DATE
CHECKED DDS DATE | SCALE

BOND PROJECT NO. 03-13 SHEET 213 OF 277

P-20061201

12/28/2006 4:54:35 PM
I:\23000s\23819\FRISCO\DGN\23819FRSTM08.dgn

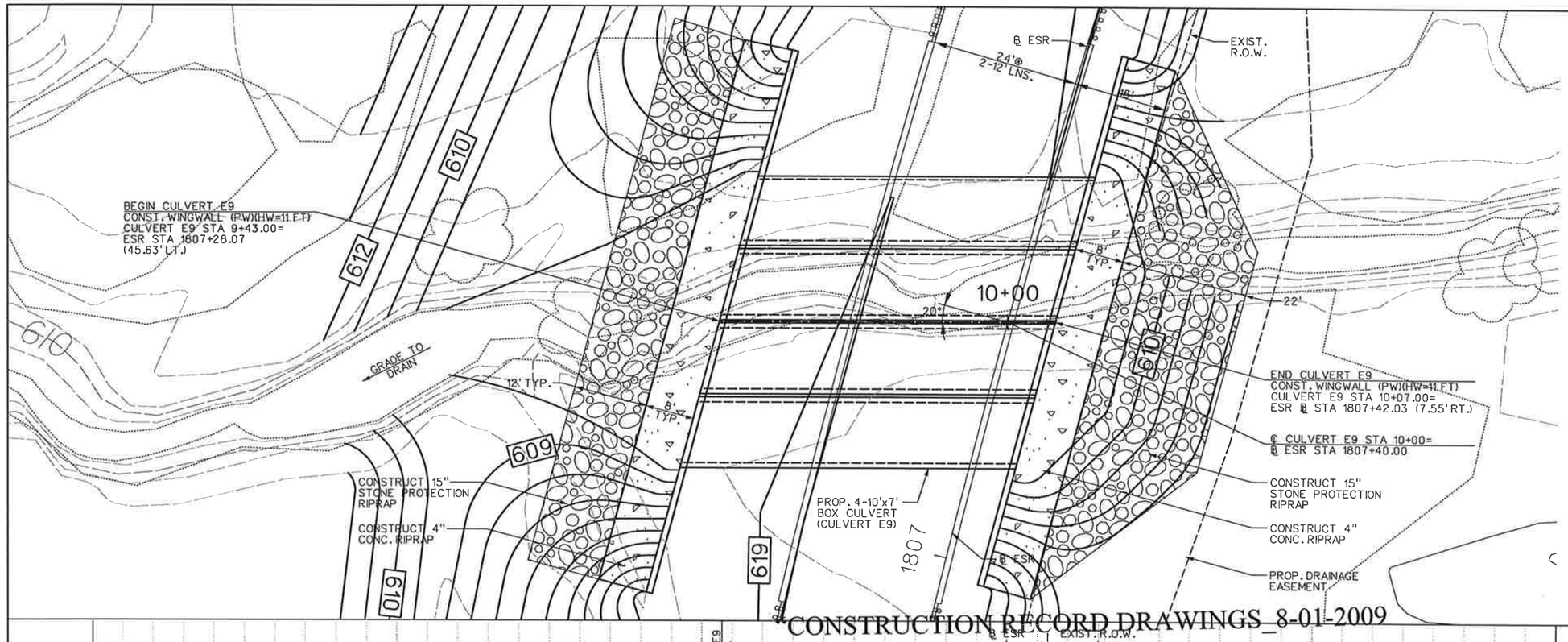

0 10 20 30 40
SCALE IN FEET

N

HYDRAULIC DATA

Q_{50}= 2235 cfs	Q_{100}= 2615 cfs
V_{50}= 9.31 fps	V_{100}= 9.98 fps
TW_{50}= 613.4	TW_{100}= 613.9
HW_{50}= 615.5	HW_{100}= 616.3
s = 0.0016	s = 0.0022

CONSTRUCTION RECORD DRAWINGS_8-01-2009

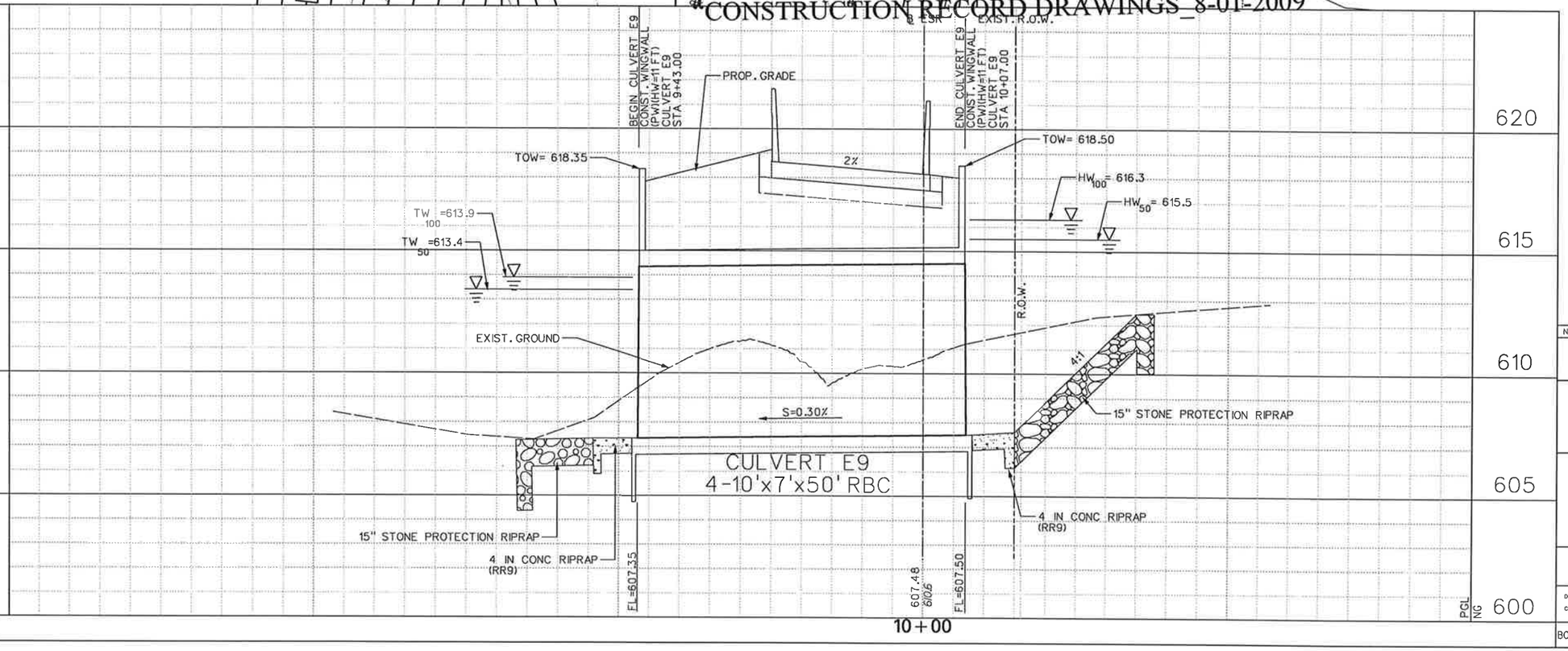

NOTES:

1. EXISTING UTILITIES SHOWN ARE APPROXIMATE. CONTRACTOR SHALL CONFIRM PRESENCE AND LOCATION OF ALL UTILITIES PRIOR TO WORK.

2. SEE PAVING PLANS FOR ROADWAY GEOMETRY.

STATE OF TEXAS
DENNIS D. SATRE
71590
REGISTERED PROFESSIONAL ENGINEER
12/28/06

NO.	DATE	REVISION	APPROV.

DALLAS PARKWAY EXTENSION

COLLIN COUNTY

CULVERT LAYOUT
CULVERT E9

Halff Associates, Inc.
ENGINEERS · ARCHITECTS · SCIENTISTS · PLANNERS · SURVEYORS

DRAWN MR	DATE DEC 2006	DESIGNED ML	DATE
CHECKED DDS	DATE	SCALE	

BOND PROJECT NO. 03-13 SHEET 214 OF 277

P-200612-01

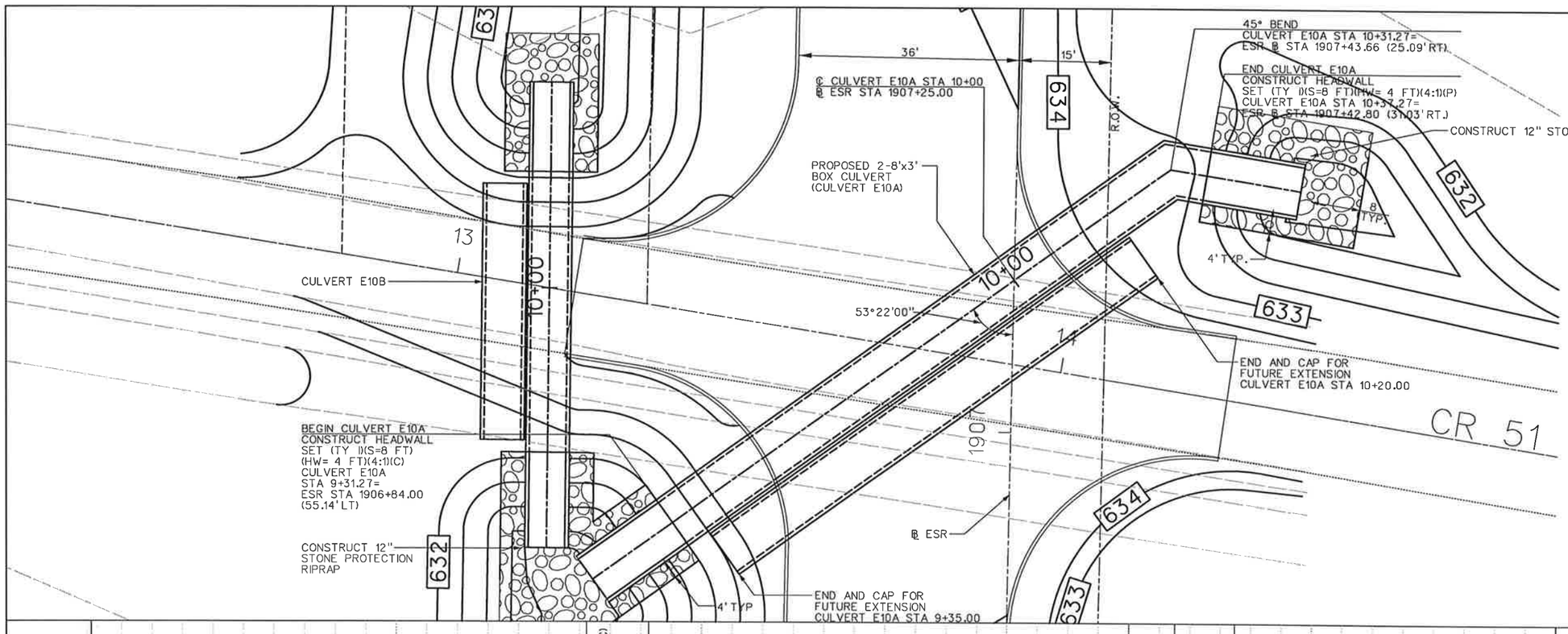

HYDRAULIC DATA

Q_{50}= 355 cfs	Q_{100}= 386 cfs
V_{50}= 7.40 fps	V_{100}= 8.04 fps
TW_{50}= 631.4	TW_{100}= 631.6
HW_{50}= *	HW_{100}= *
s = 0.0037	s = 0.0044

(*) - CULVERT IS INTENDED TO BE EXTENDED BEYOND ITS ENTRANCE HEADWALL UNDER DEVELOPED CONDITIONS.

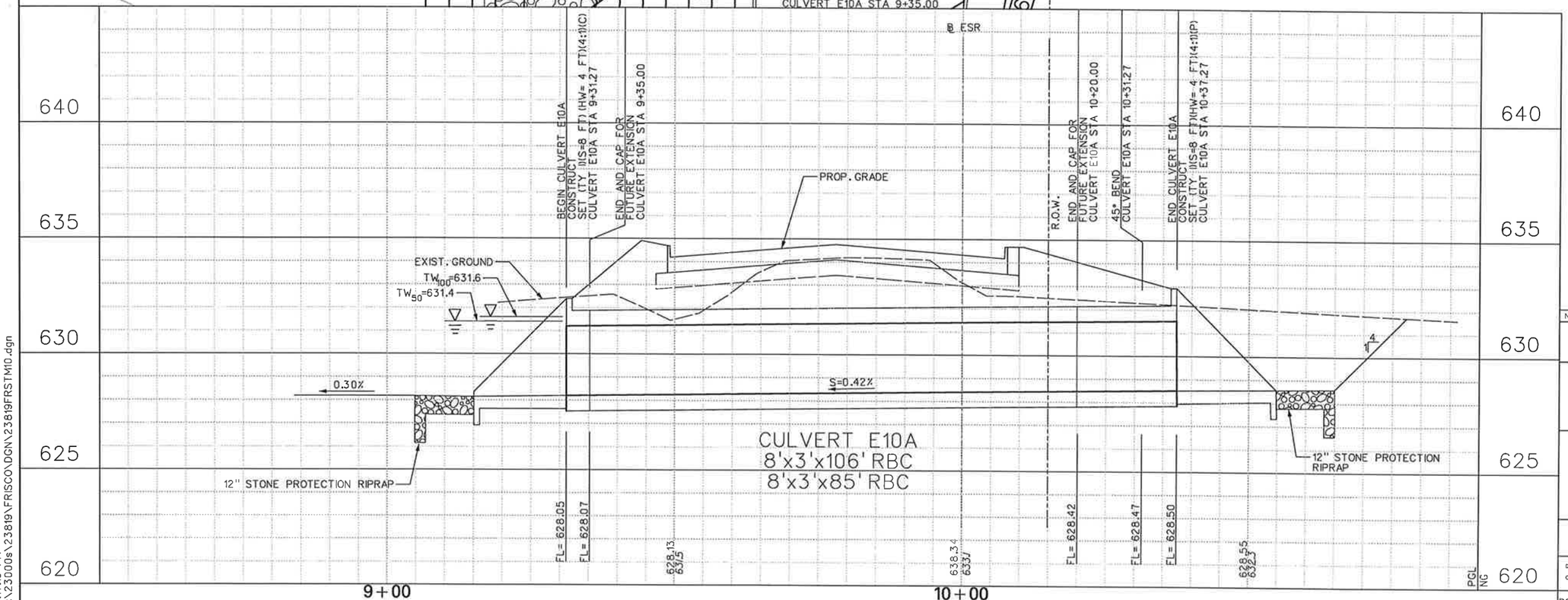

NOTES:

1. EXISTING UTILITIES SHOWN ARE APPROXIMATE. CONTRACTOR SHALL CONFIRM PRESENCE AND LOCATION OF ALL UTILITIES PRIOR TO WORK.

2. SEE PAVING PLANS FOR ROADWAY GEOMETRY.

STATE OF TEXAS
DENNIS D. SATRE
71590
REGISTERED PROFESSIONAL ENGINEER
12/28/06

NO.	DATE	REVISION	APPROV.

DALLAS PARKWAY EXTENSION

COLLIN COUNTY

CULVERT LAYOUT
CULVERT E10A

Halff Associates, Inc.
ENGINEERS · ARCHITECTS · SCIENTISTS · PLANNERS · SURVEYORS

DRAWN MR	DATE DEC 2006	DESIGNED ML	DATE
CHECKED DDS	DATE	SCALE	

BOND PROJECT NO. 03-13 SHEET 215 OF 277

P-200612-01

6:17:15 PM
I:\23000s\23819\FRISCO\DGN\23819FRSTM10.dgn

12/28/2006 6:17:15 PM

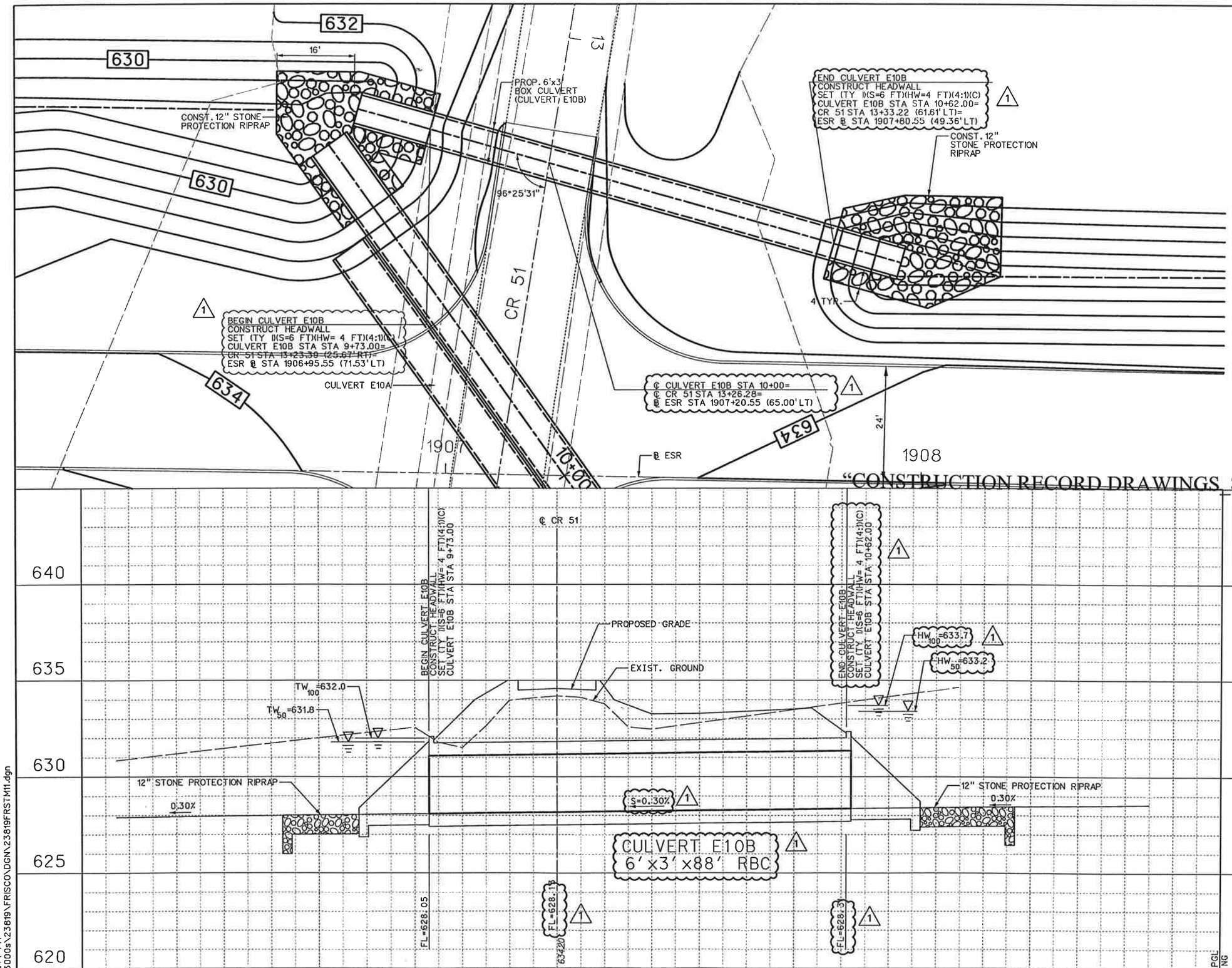

NOTES:

1. EXISTING UTILITIES SHOWN ARE APPROXIMATE. CONTRACTOR SHALL CONFIRM PRESENCE AND LOCATION OF ALL UTILITIES PRIOR TO WORK.

2. SEE PAVING PLANS FOR ROADWAY GEOMETRY.

HYDRAULIC DATA (*)

Q_{50}= 120 cfs	Q_{100}= 131 cfs
V_{50}= 6.67 fps	V_{100}= 7.28 fps
TW_{50}= 631.8	TW_{100}= 632.0
HW_{50}= 633.2	HW_{100}= 633.7
s = 0.2900	s = 0.3430

* DRAINAGE CALCULATIONS REFLECT EXISTING CONDITIONS RUNOFF. AS RUNOFF INCREASES DUE TO DEVELOPMENT IN THE AREA, THE CAPACITY OF THE CULVERT WILL NEED TO BE INCREASED.

"CONSTRUCTION RECORD DRAWINGS 8-01-2009

STATE OF TEXAS
DENNIS D. SATRE
71590
REGISTERED PROFESSIONAL ENGINEER
9.27.07

NO.	DATE	REVISION	APPROV.
1	9/27/07	CULVERT E10B - C.O. #2	D. SATRE

DALLAS PARKWAY EXTENSION

COLLIN COUNTY

CULVERT LAYOUT
CULVERT E10B

Halff Associates, Inc.
ENGINEERS · ARCHITECTS · SCIENTISTS · PLANNERS · SURVEYORS

DRAWN MR DATE DEC 2006 DESIGNED ML DATE
CHECKED DDS DATE SCALE

BOND PROJECT NO. 03-13 SHEET 216 OF 271

2:42:44 PM
i:\23000s\23819\FRISCO\DGN\23819FRSTM11.dgn

10/9/2007 2:42:44 PM

P-200612-01

I:\23000s\23819\FRISCO\DGN\23819FRSTM12.dgn

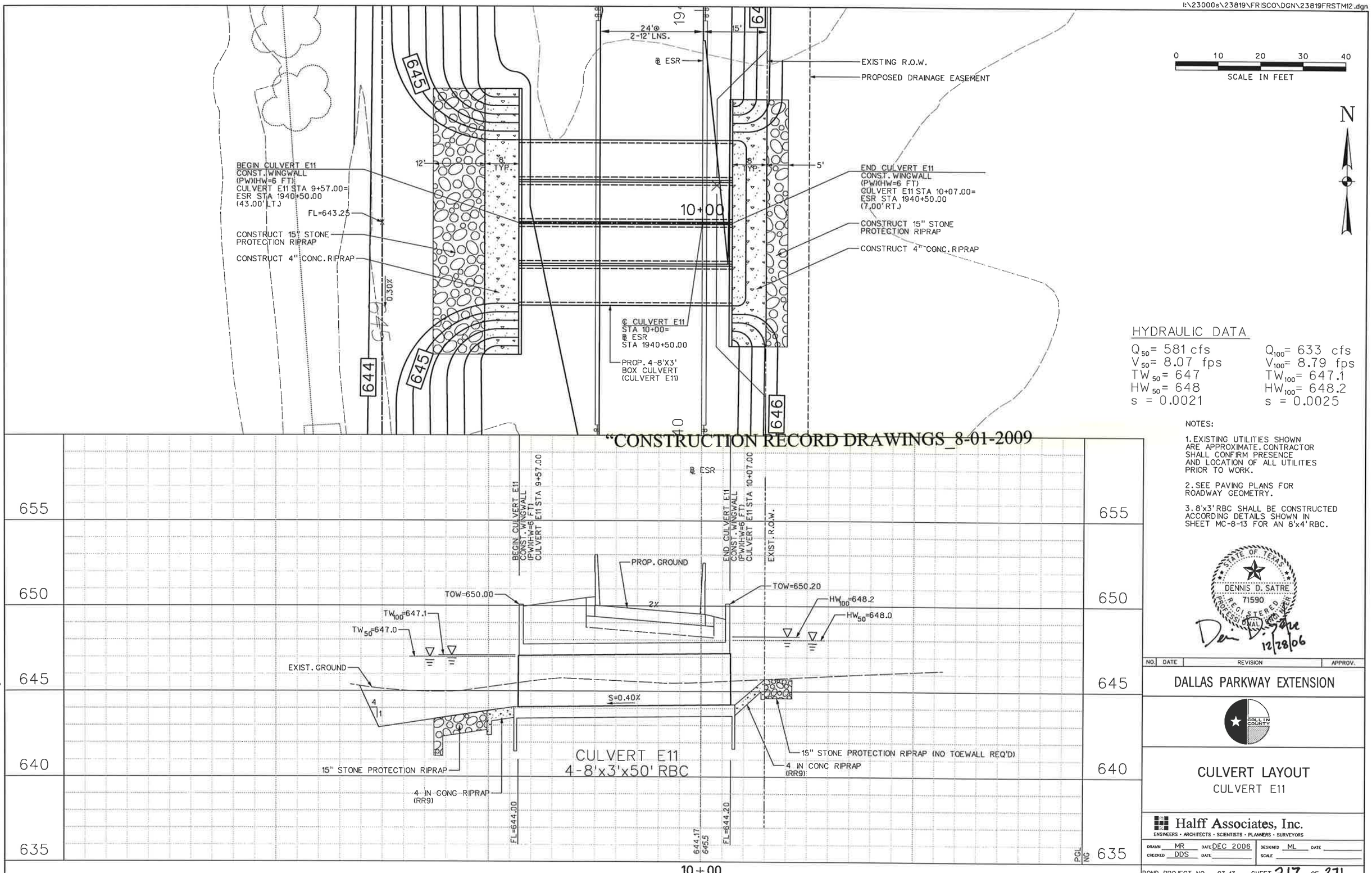

"CONSTRUCTION RECORD DRAWINGS_8-01-2009

HYDRAULIC DATA

Q_{50}= 581 cfs	Q_{100}= 633 cfs
V_{50}= 8.07 fps	V_{100}= 8.79 fps
TW_{50}= 647	TW_{100}= 647.1
HW_{50}= 648	HW_{100}= 648.2
s = 0.0021	s = 0.0025

NOTES:

1. EXISTING UTILITIES SHOWN ARE APPROXIMATE. CONTRACTOR SHALL CONFIRM PRESENCE AND LOCATION OF ALL UTILITIES PRIOR TO WORK.
2. SEE PAVING PLANS FOR ROADWAY GEOMETRY.
3. 8'x3' RBC SHALL BE CONSTRUCTED ACCORDING DETAILS SHOWN IN SHEET MC-8-13 FOR AN 8'x4' RBC.

STATE OF TEXAS
DENNIS D. SATRE
71590
REGISTERED PROFESSIONAL ENGINEER
12/28/06

NO.	DATE	REVISION	APPROV.

DALLAS PARKWAY EXTENSION

COLLIN COUNTY

CULVERT LAYOUT
CULVERT E11

Halff Associates, Inc.
ENGINEERS · ARCHITECTS · SCIENTISTS · PLANNERS · SURVEYORS

DRAWN MR DATE DEC 2006 DESIGNED ML DATE
CHECKED DDS DATE SCALE

BOND PROJECT NO. 03-13 SHEET 217 OF 271

12/28/2006 5:58:37 PM

P-200612-01

5:58:37 PM
I:\23000s\23819\FRISCO\DGN\23819FRSTM12.dgn

30° BEND
CULVERT E12 STA 9+03.97=
ESR @ STA 1964+29.31 (91.03' LT)=
FM 428 ℄ STA 10+94.04 (60.80' RT)

BEGIN CULVERT E12
CONST. HEADWALL
SET (TY I)(S= 6 FT)(HW= 3 FT)(4:1)(P)
(QTY=3)
CULVERT E12 STA 8+90.00=
ESR @ STA 1964+29.30 (105.00' LT.)=
FM 428 ℄ STA 10+80.07 (60.80' RT)

30° BEND
CULVERT E12 STA 9+41.21=
ESR @ STA 1964+47.95 (58.79' LT)=
FM 428 ℄ STA 11+26.29 (42.20' RT)

60° WYE
CULVERT E12 STA 9+87.40=
LINE N1 STA 0+00.00=
ESR @ STA 1964+47.95 (58.79' LT)=
FM 428 ℄ STA 11+72.48 (60.88' RT)

F.M. 428 ROW
6' DITCH
649.95 ± EX.
℄ FM 428
650
FARM TO MARKET ROAD 428
VARIES
42.20' TO
43.89'
4' TYP.
4' TYP.
8' TYP.
N89°43'16"E
10+00
11+00
12+00
13+00
14+00
CONSTRUCT 4"
CONCRETE RIPRAP (RR9)
1
PROPOSED
DRAINAGE
EASEMENT
GRADE
TO
DRAIN
PROP. 6'x3'
BOX CULVERT
(CULVERT E12)
F.M. 428 ROW
END & CAP MIDDLE 6'x3' RBC
END SOUTH 6'x3' RBC WITH
HEADWALL SET (MOD)(TY I)
(S= 6 FT)(HW= 4 FT)(FW= 3.5 FT)(12:1)(P)
CULVERT E12 STA 10+35.00
1
PROP. 2-6'x3'
BOX CULVERT
(CULVERT E12)
LAT N1-3
CONSTRUCT 12"
STONE PROTECTION
RIPRAP
36' @
3-12' LNS.
℄ CULVERT E12 STA 10+00=
@ ESR STA 1964+44.08
LINE N1
@ ESR
EXIST. R.O.W.
℄ DNT

MATCH LINE 15+00

"CONSTRUCTION RECORD DRAWINGS" 8-01-2009

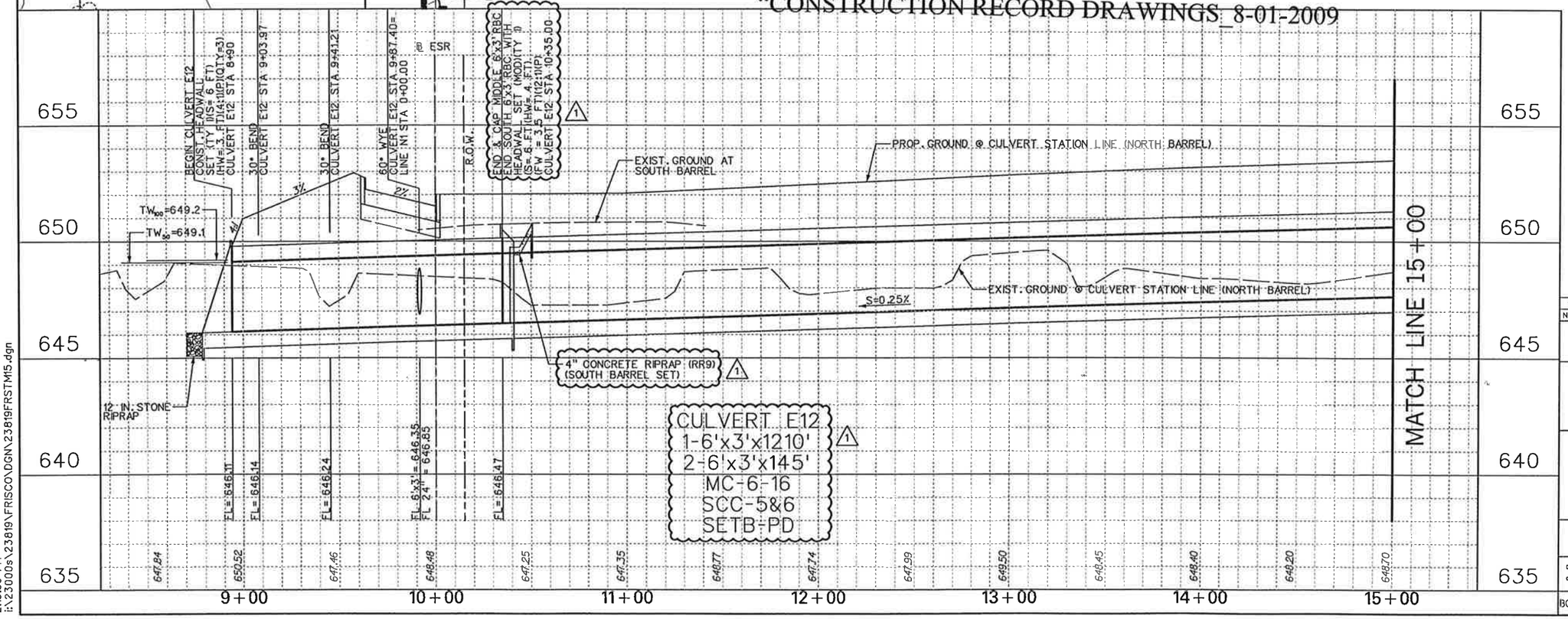

0 30 60 90 120
SCALE IN FEET

N

HYDRAULIC DATA
(ULTIMATE CONDITIONS)

Q_{50}= 350 cfs	Q_{100}= 385 cfs
V_{50}= 8.07 fps	V_{100}= 8.79 fps
TW_{50}= 649.1	TW_{100}= 649.2
HW_{50}= 653.4	HW_{100}= 654.4
s = 0.0027	s = 0.0033

NOTE:

1. HYDRAULIC CALCULATIONS ARE BASED ON RUNOFF FROM ULTIMATE BUILD-OUT CONDITIONS THROUGH 3-6'x3' RBC RUNNING THE ENTIRE LENGTH OF THE CULVERT.
2. EXISTING UTILITIES SHOWN ARE APPROXIMATE. CONTRACTOR SHALL CONFIRM PRESENCE AND LOCATION OF ALL UTILITIES PRIOR TO WORK.
3. SEE PAVING PLANS FOR ROADWAY GEOMETRY.

STATE OF TEXAS
DENNIS D. SATRE
71590
REGISTERED PROFESSIONAL ENGINEER
3.30.07

NO.	DATE	REVISION	APPROV.
1	3/30/07	TxDOT DRIVEWAY PERMIT - C.O. #1	

DALLAS PARKWAY EXTENSION

COLLIN COUNTY

CULVERT LAYOUT
CULVERT E12

Halff Associates, Inc.
ENGINEERS · ARCHITECTS · SCIENTISTS · PLANNERS · SURVEYORS

DRAWN MR DATE DEC 2006 | DESIGNED ML DATE
CHECKED DDS DATE | SCALE

BOND PROJECT NO. 03-13 SHEET 218 OF 271

2:13:39 PM
i:\23000s\23819\FRISCO\DGN\23819FRSTM15.dgn

5/31/2007 2:13:39 PM
P-200612-01

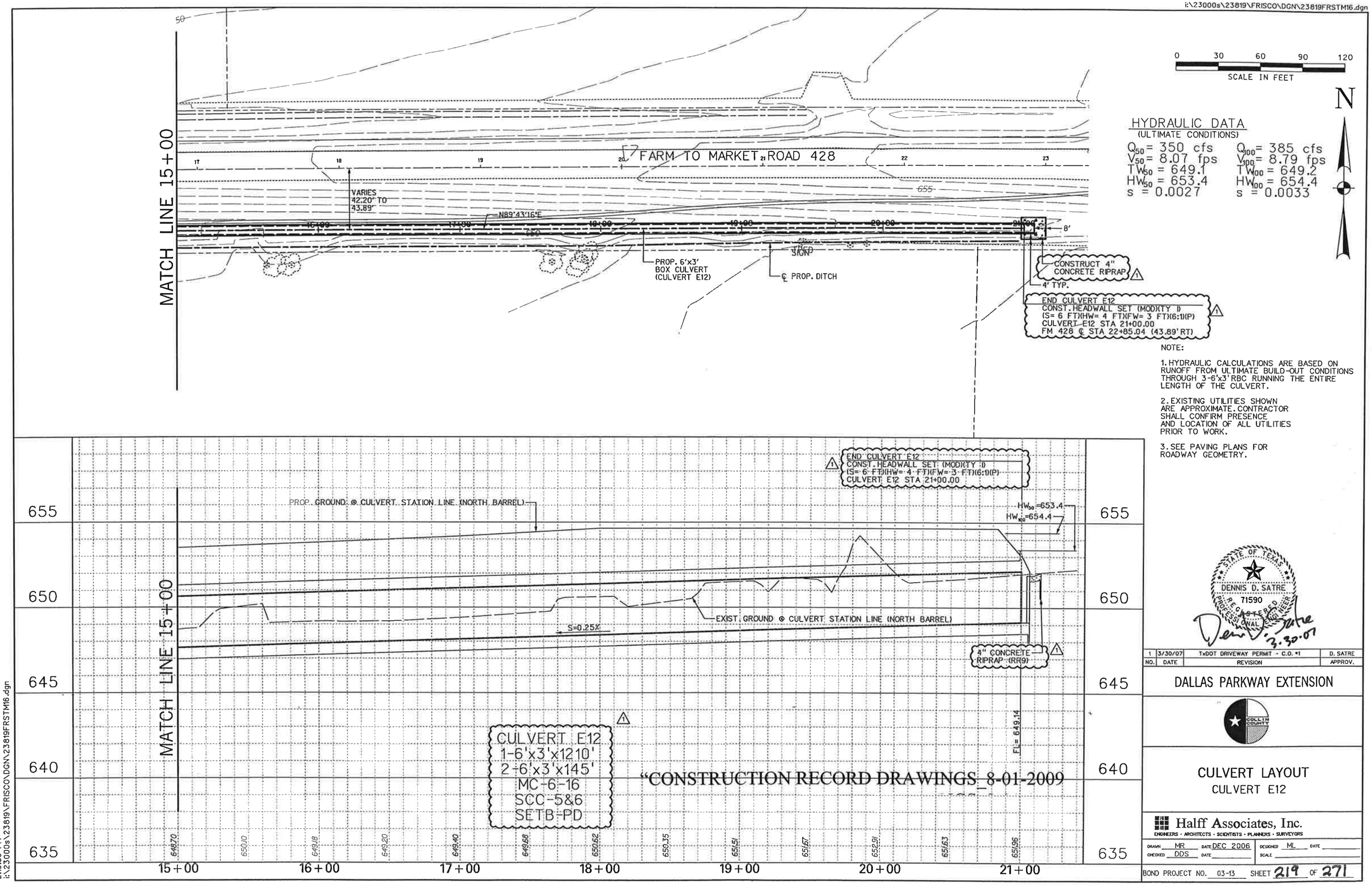

NOTE:

1. HYDRAULIC CALCULATIONS ARE BASED ON RUNOFF FROM ULTIMATE BUILD-OUT CONDITIONS THROUGH 3-6'x3' RBC RUNNING THE ENTIRE LENGTH OF THE CULVERT.

2. EXISTING UTILITIES SHOWN ARE APPROXIMATE. CONTRACTOR SHALL CONFIRM PRESENCE AND LOCATION OF ALL UTILITIES PRIOR TO WORK.

3. SEE PAVING PLANS FOR ROADWAY GEOMETRY.

STATE OF TEXAS
DENNIS D. SATRE
71590
REGISTERED PROFESSIONAL ENGINEER
3.30.07

NO.	DATE	REVISION	APPROV.
1	3/30/07	TxDOT DRIVEWAY PERMIT - C.O. #1	D. SATRE

DALLAS PARKWAY EXTENSION

COLLIN COUNTY

CULVERT LAYOUT
CULVERT E12

Halff Associates, Inc.
ENGINEERS · ARCHITECTS · SCIENTISTS · PLANNERS · SURVEYORS

DRAWN MR DATE DEC 2006 DESIGNED ML DATE
CHECKED DDS DATE SCALE

BOND PROJECT NO. 03-13 SHEET 219 OF 271

2:13:56 PM
i:\23000s\23819\FRISCO\DGN\23819FRSTM16.dgn

5/31/2007 2:13:56 PM

P-200612-01

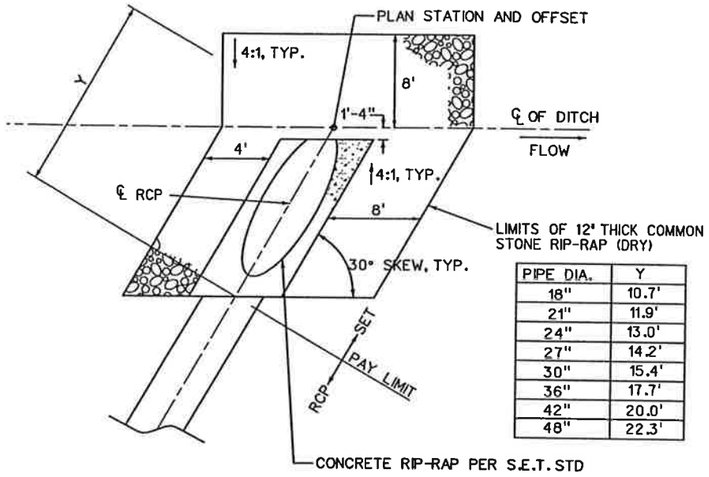

PIPE DIA.	Y
18"	10.7'
21"	11.9'
24"	13.0'
27"	14.2'
30"	15.4'
36"	17.7'
42"	20.0'
48"	22.3'

TYPICAL S.E.T. INSTALLATION

N.T.S.

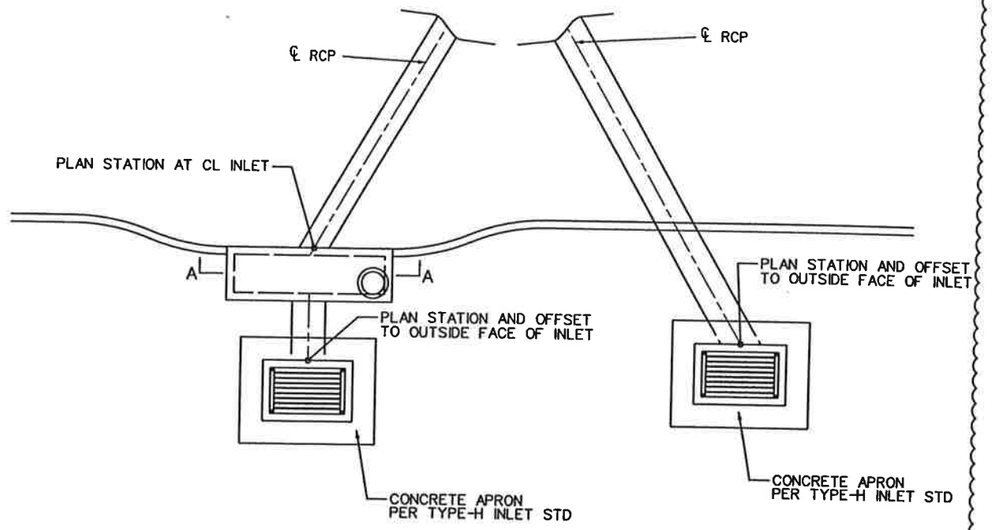

INLET LAYOUT DETAIL

1

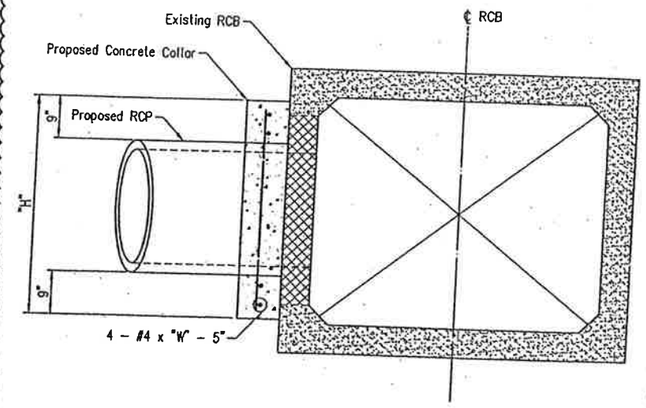

PIPE COLLAR SECTION

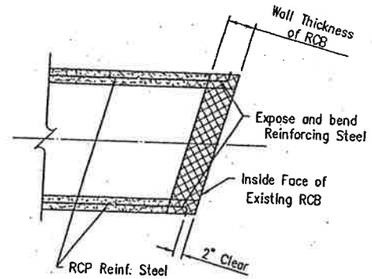

PIPE DETAIL

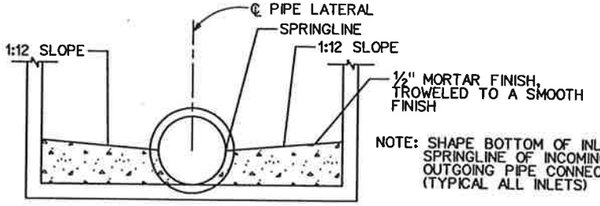

NOTE: SHAPE BOTTOM OF INLET TO SPRINGLINE OF INCOMING AND OUTGOING PIPE CONNECTIONS (TYPICAL ALL INLETS)

PIPE LATERAL CONNECTION DETAIL

FOR CURB INLET CONNECTION (SECTION A-A)

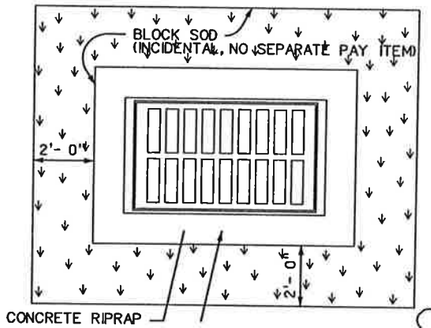

BLOCK SOD AT INLETS

NOT TO SCALE

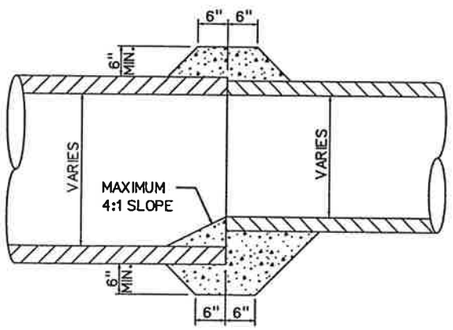

DETAIL OF CONCRETE COLLAR

FOR END TO END EXTENSIONS

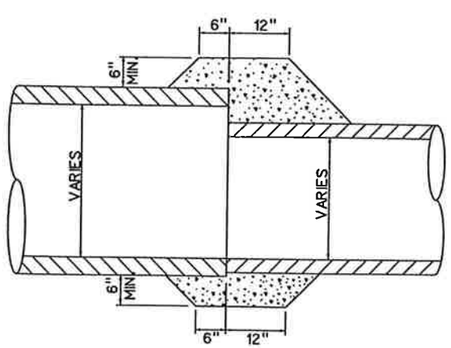

FOR END TO END EXTENSIONS

DETAIL OF CONCRETE COLLAR

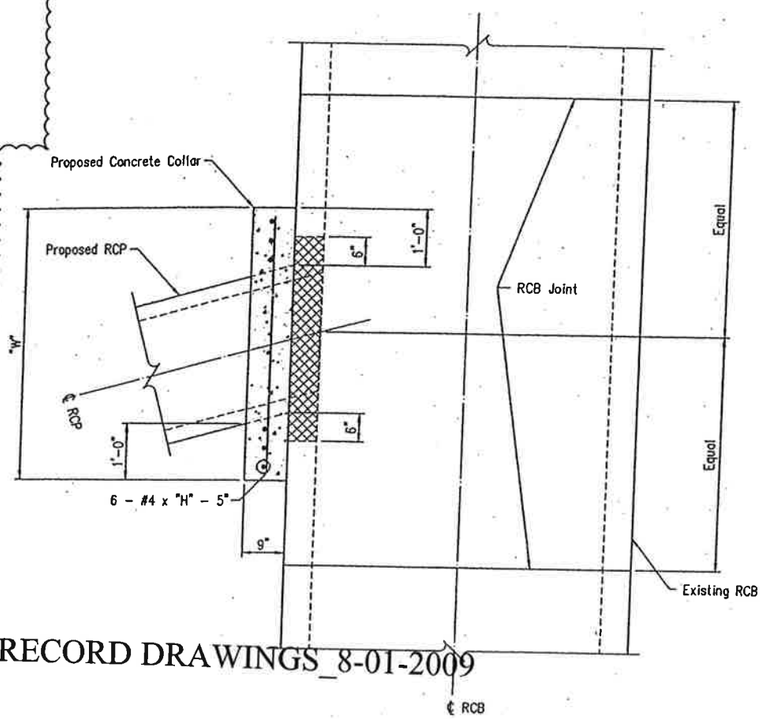

PIPE COLLAR PLAN

"CONSTRUCTION RECORD DRAWINGS_8-01-2009

STATE OF TEXAS
DENNIS D. SATRE
71590
REGISTERED PROFESSIONAL ENGINEER
1-19-07

NO.	DATE	REVISION	APPROV.
1	01/19/07	ADDENDUM #1	D. SATRE

DALLAS PARKWAY EXTENSION

COLLIN COUNTY

MISCELLANEOUS DRAINAGE DETAILS

Halff Associates, Inc.
ENGINEERS · ARCHITECTS · SCIENTISTS · PLANNERS · SURVEYORS

DRAWN	MDB	DATE DEC 2006	DESIGNED DDS DATE
CHECKED	DDS	DATE	SCALE

BOND PROJECT NO. 03-13 SHEET 220 OF 271

P-200612-01

11:44:02 AM
I:\23000s\23819\FRISCO\DGN\23819SD_DETAILS.dgn

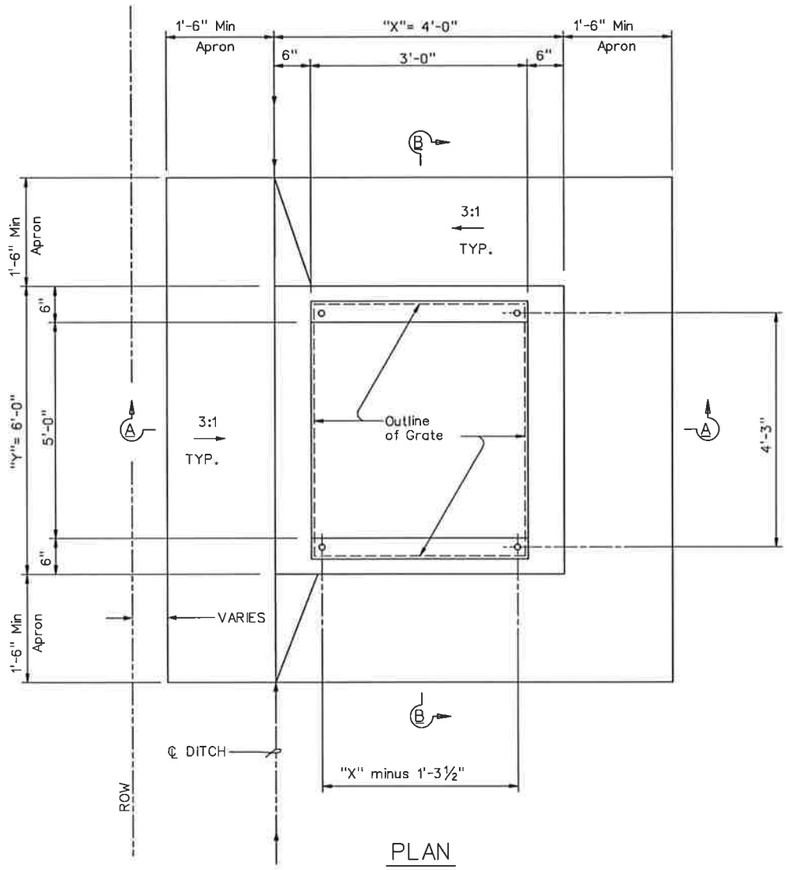

PLAN

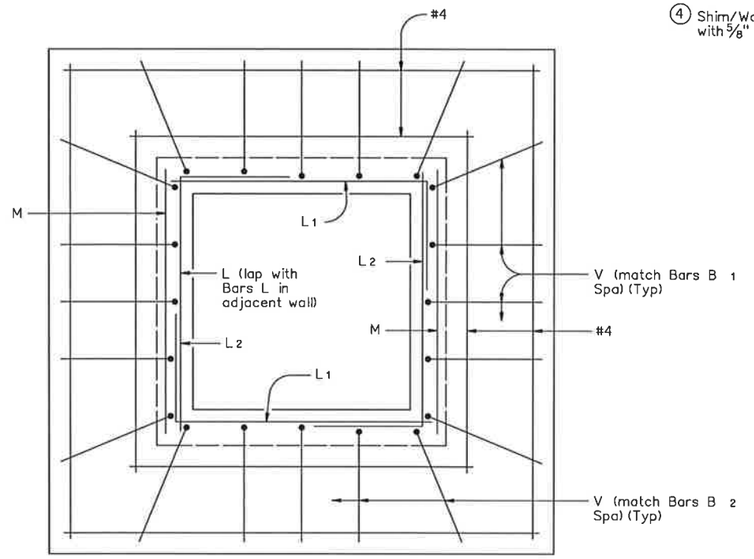

TYPICAL APRON PLAN

(Showing reinforcing in walls and in apron)

1. May be changed as directed by the Engineer.
2. D equals the maximum inside diameter of any pipe entering the wall shown or the opposite wall.
3. D equals the maximum inside diameter of any pipe entering the inlet.
4. Shim/Washer shall be minimum 2" square with 5/8" dia. hole.

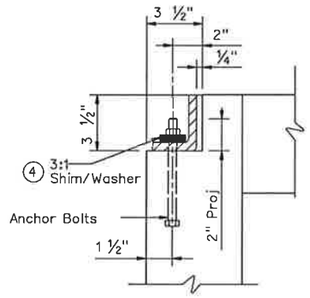

GRATE MOUNTING DETAIL

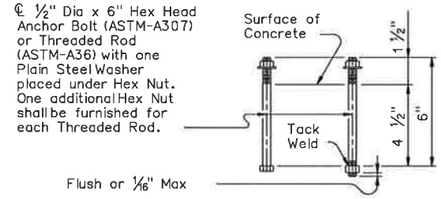

ANCHOR BOLT OPTIONS

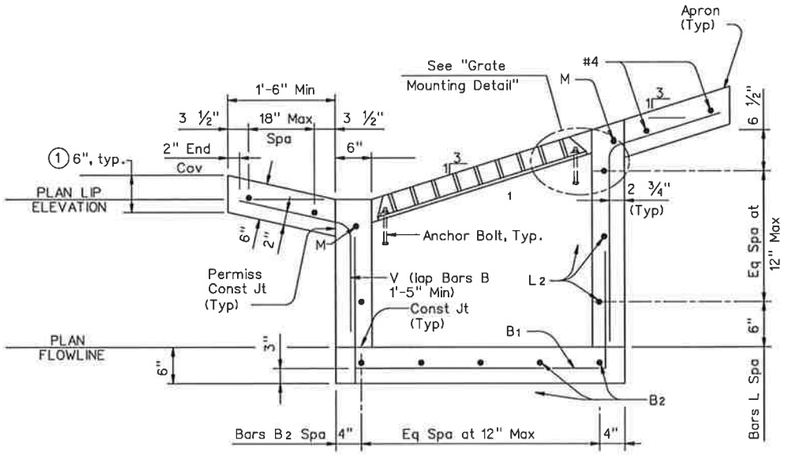

SECTION A-A

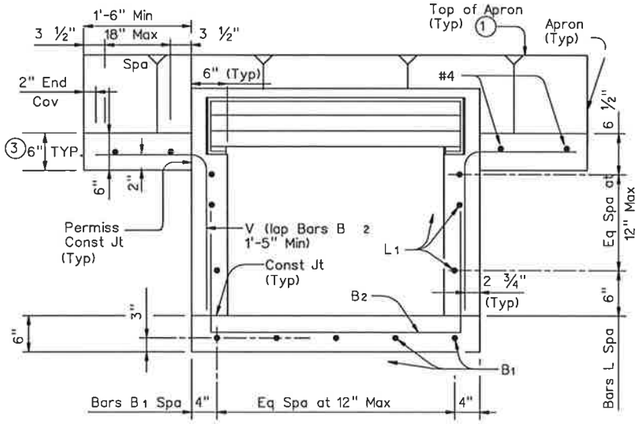

SECTION B-B

"CONSTRUCTION RECORD DRAWINGS_8-01-2009

STATE OF TEXAS
DENNIS D. SATRE
71590
REGISTERED PROFESSIONAL ENGINEER
12/28/06

NO.	DATE	REVISION	APPROV.

DALLAS PARKWAY EXTENSION

COLLIN COUNTY

HORIZONTAL INLET
TYPE H WITH GRATE
IL-H-G (MOD)

1 OF 2

Halff Associates, Inc.
ENGINEERS · ARCHITECTS · SCIENTISTS · PLANNERS · SURVEYORS

DRAWN MDB	DATE DEC 2006	DESIGNED DDS	DATE
CHECKED DDS	DATE	SCALE 1"=XX'	

BOND PROJECT NO. 03-13 SHEET 221 OF 271

P200612-01

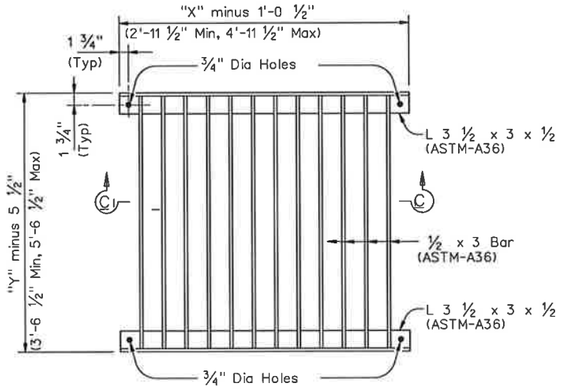

TYPICAL GRATE PLAN

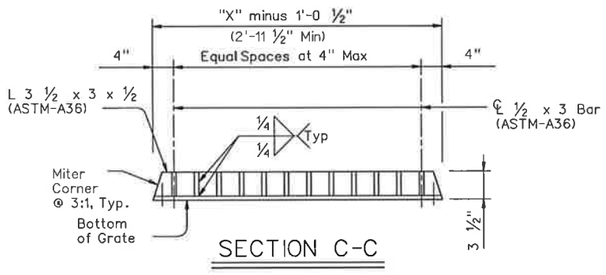

SECTION C-C

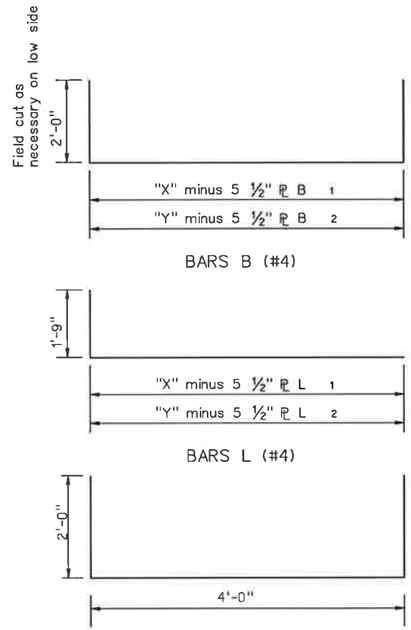

BARS B (#4)

BARS L (#4)

BARS M (#4)

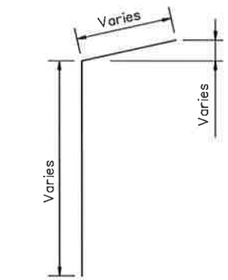

BARS V (#4)

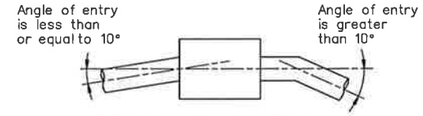

PIPE CONNECTION DETAIL

Connecting pipes should enter within 10° of normal to inlet wall. If necessary, pipe elbow or curved approach alignment should be used to stay within this limit.

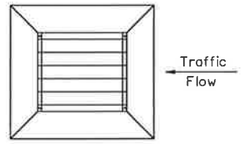

GRATE ORIENTATION DETAIL

If possible, horizontal grate inlet should be oriented such that both traffic and ditch water approach parallel to bars on grate. If this is not possible, orientation must favor traffic flow. Grate is not to be used under direct traffic, rather it is to be used in ditches and medians away from the roadway.

GENERAL NOTES:

1. When approved, precast inlets with equivalent structural capacity may be furnished. Sealed engineering calculations and drawings shall be submitted for approval prior to construction.

2. Shop drawings will not be required.

3. Apron shall be cast-in-place.

4. In areas of conflict between reinforcing steel, blockouts, pipes, anchor bolts or other reinforcing steel, the reinforcement shall be bent or adjusted to clear as directed by the Engineer.

5. Anchor Bolts are ½" Dia ASTM A307 Grade A bolts (or A36 threaded rods with one tack welded hex head nut each) with one hex head nut and one plain steel washer.

6. Structural Steel for grates shall conform to the requirements of ASTM Designation A-36 or AISI Designation M1010-M1020.

7. All reinforcing steel shall be Grade 60 unless otherwise noted.

8. All steel components except reinforcing, shall be galvanized after fabrication. Galvanizing damaged during transport or construction shall be repaired in accordance with the specifications.

9. All concrete shall be Class "A" (f'c = 3,000 psi).

NO.	DATE	REVISION	APPROV.

DALLAS PARKWAY EXTENSION

COLLIN COUNTY

HORIZONTAL INLET TYPE H WITH GRATE

IL-H-G (MOD)

2 OF 2

Halff Associates, Inc.
ENGINEERS · ARCHITECTS · SCIENTISTS · PLANNERS · SURVEYORS

DRAWN MDB	DATE DEC 2006	DESIGNED DDS	DATE
CHECKED DDS	DATE	SCALE 1"=XX'	

BOND PROJECT NO. 03-13 SHEET 222 OF 271

"CONSTRUCTION RECORD DRAWINGS_8-01-2009

$$$$$$$$$$$$dgnspec$$$$$$$$$$$$$$$$

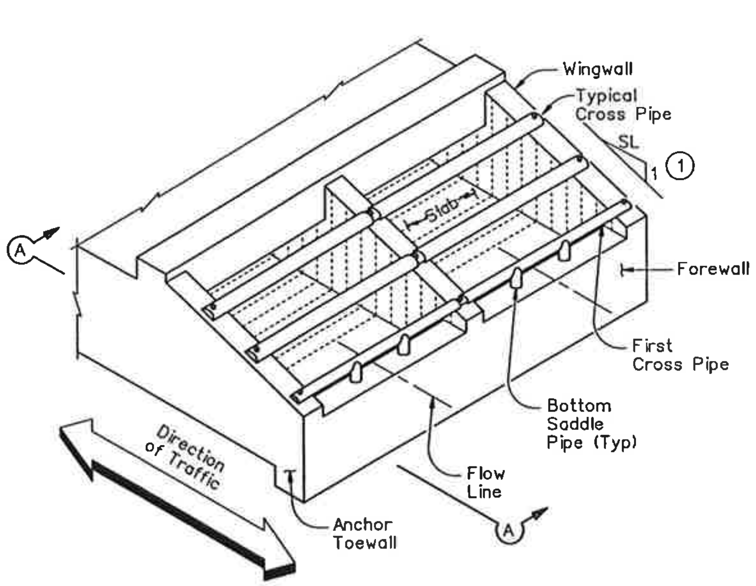

ISOMETRIC VIEW OF TYPICAL INSTALLATION

(Showing Bolted Anchor Option)

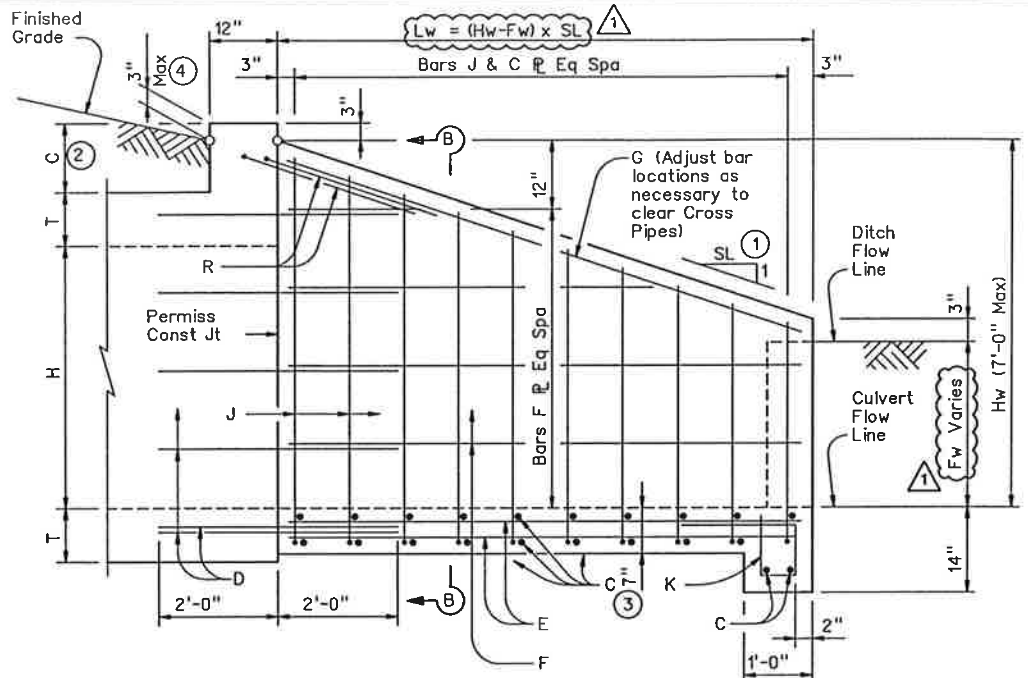

TYPICAL WINGWALL ELEVATION

(Cross Pipes not shown for clarity)

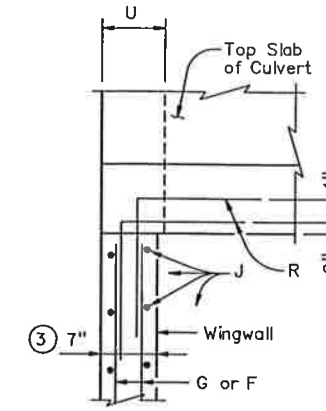

AT TOP OF EXTERIOR WINGWALL

(Cast-in-Place Culvert)

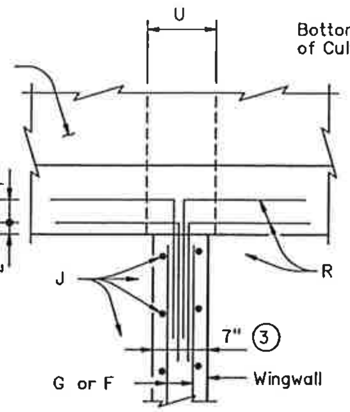

AT TOP OF INTERIOR WINGWALL

(Cast-in-Place Culvert)

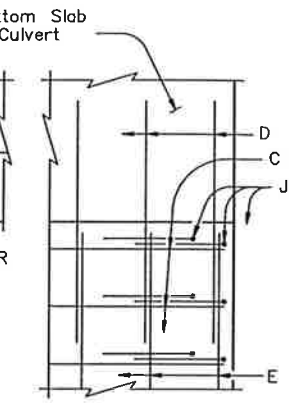

AT OUTSIDE OF BOTTOM SLAB

(Cast-in-Place Culvert)

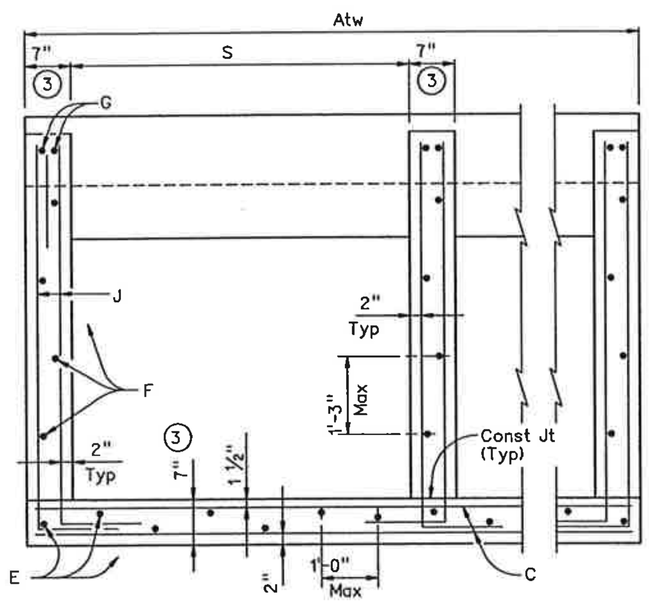

SECTION B-B

(Showing typical Wingwall and Wing Slab reinforcing)
(Pipe Runners not shown for clarity)

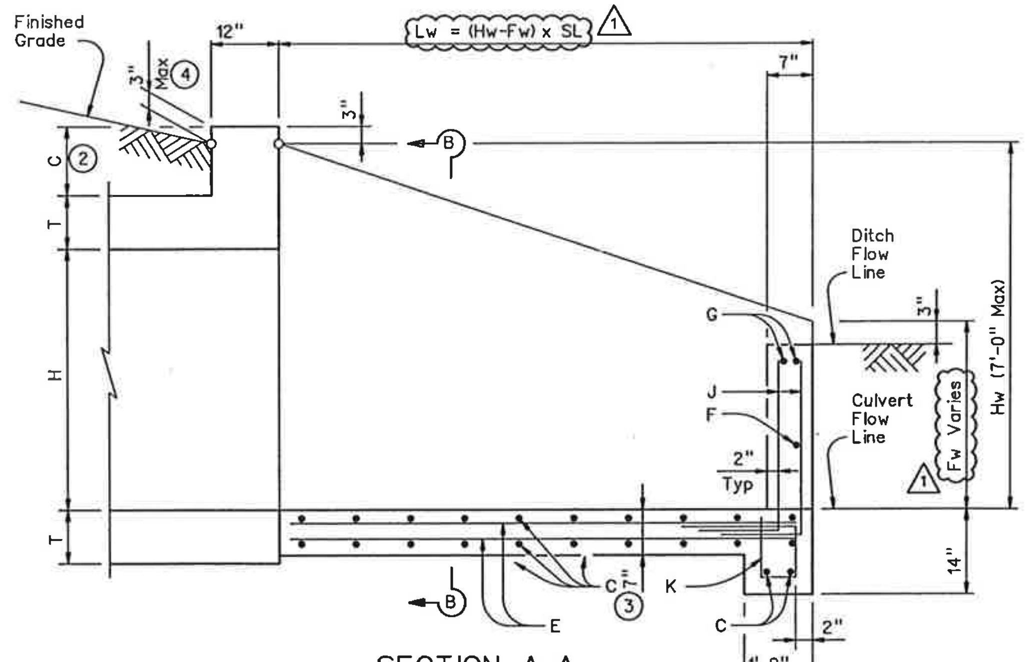

SECTION A-A

(Showing typical Forewall and Wing Slab reinforcing)
(Pipe Runners not shown for clarity)

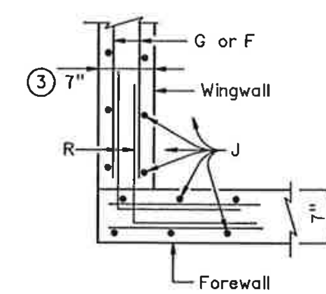

AT TOP OF EXTERIOR WINGWALL

(Junction with Forewall)

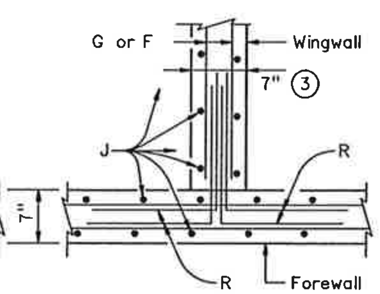

AT TOP OF INTERIOR WINGWALL

(Junction with Forewall)

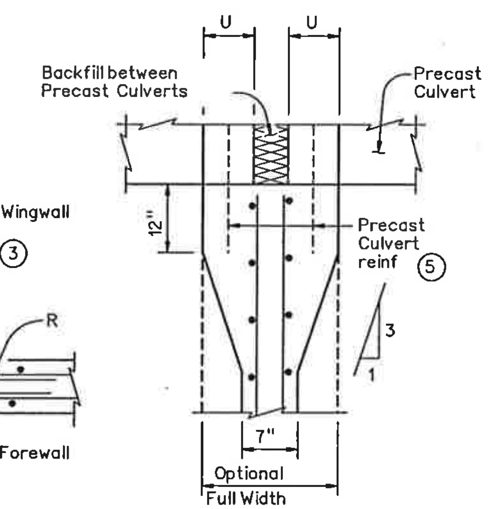

AT INTERIOR WINGWALL

(Precast Culvert)

"CONSTRUCTION RECORD DRAWINGS_8-01-2009

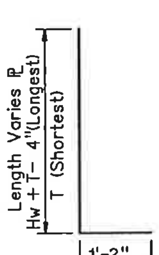

BARS J

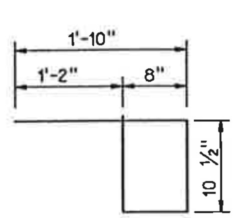

BARS K
(Length = 4'-3")

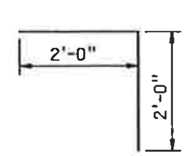

BARS R

TABLE OF REINFORCING BAR SIZES & SPACING

Bar	Size	Spacing
C	#4	10" Max
D	#4	match F & E
E	#4	1'- 0" Max
F	#4	1'- 3" Max
G	#6	Shown
J	#4	10" Max
K	#4	1'- 0" Max
R	#4	Shown

(1) Recommended values of slope are: 3:1, 4:1, & 6:1. Slope shall be 3:1 or flatter.

(2) 0" min to 5'-0" max. Estimated curb heights are shown elsewhere in the plans. For structures without railing and curbs taller than 1'-0", refer to ECD standard.

(3) Wingwall and slab thicknesses may be the same as the adjacent culvert wall and slab thicknesses (7" Minimum). If thicknesses greater than the minimum (7") are used, no changes will be made in quantities and no additional compensation will be allowed.

(4) For vehicle safety, curbs shall project no more than 3" above finished grade. Curb heights shall be reduced, if necessary, to meet these requirements. No changes will be made in quantities and no additional compensation will be allowed for this work.

(5) For Culverts with C = 0", the precast culvert reinforcing may extend 1'-0" minimum into Wingwall. Wingwall Bars D and R may be omitted. Otherwise, refer to the "Wingwall Connection Detail" on the SCP-MD standard.

C = Height of Curb above top of Top Slab
Hw = Height of Wingwall
K = Constant Value for use in formulas
Slope SL:1 K
6:1 ℄ 10.41
Atw = Anchor Toewall Length
Lw = Length of Wingwall
N = Number of Culvert Barrels
S = Clear Span of each Barrel
SL:1 = Side Slope Ratio (Horizontal : 1 Vertical)

See applicable box culvert standard for H, S, T, and U values.

GENERAL NOTES:

1. All reinforcing steel shall be Grade 60. All reinforcing shall be adjusted as necessary to provide a minimum clear cover of 1 ¼".

2. Cross Pipes, Sleeve Pipes, and Saddle Pipes shall conform to the requirements of ASTM A53 (Type E or S, Grade B), ASTM A500 (Grade B), or API5LX52.

3. Bolts and nuts shall conform to ASTM A307.

4. All steel components, except the concrete reinforcing, shall be galvanized after fabrication. Galvanizing damaged during transport or construction shall be repaired in accordance with the specifications.

5. Deleted

6. Alternate design drawings bearing the seal of a professional engineer will be acceptable for precast construction of the Safety End Treatments.

7. See TxDOT Standard SETB-PD, Sheet 2 of 2 for cross pipe details.

NO.	DATE	REVISION	APPROV.
1	3/30/07	TxDOT DRIVEWAY PERMIT - C.O. #1	D. SATRE

DALLAS PARKWAY EXTENSION

COLLIN COUNTY

SAFETY END TREATMENT (MODIFIED)

SETB-PD (MOD)

Halff Associates, Inc.
ENGINEERS · ARCHITECTS · SCIENTISTS · PLANNERS · SURVEYORS

DRAWN MDB DATE DEC 2006 DESIGNED DDS DATE
CHECKED DDS DATE SCALE 1"=XX'

BOND PROJECT NO. 03-13 SHEET 223 OF 271

$$sydate$$ $$$$$$sytime$$$$$
$$$$$$sytime$$$$$
$$$$$$$$$$$$dgnspec$$$$$$$$$$$$$$$$

P-200612-01

TABLE OF VARIABLE DIMENSIONS AND QUANTITIES FOR ONE HEADWALL (4)

SLOPE	DIA OF PIPE, D	15 Degrees						30 Degrees						45 Degrees					
		Values for one Pipe			Values to be added for each addt'l Pipe			Values for one Pipe			Values to be added for each addt'l Pipe			Values for one Pipe			Values to be added for each addt'l Pipe		
		W	Reinf (Lbs)	Conc (CY) (1)	W	Reinf (Lbs)	Conc (CY) (1)	W	Reinf (Lbs)	Conc (CY) (1)	W	Reinf (Lbs)	Conc (CY) (1)	W	Reinf (Lbs)	Conc (CY) (1)	W	Reinf (Lbs)	Conc (CY) (1)
2:1	12"	9'- 4"	124	1.1	1'- 9 3/4"	15	0.2	10'- 5"	130	1.2	2'- 0"	16	0.2	12'- 9"	159	1.5	2'- 5 3/4"	17	0.3
	15"	10'- 7"	136	1.3	2'- 3"	17	0.2	11'-10"	159	1.5	2'- 6"	18	0.2	14'- 6"	191	1.8	3'- 0 3/4"	20	0.3
	18"	11'-11"	165	1.5	2'- 9"	19	0.3	13'- 3"	174	1.7	3'- 1"	29	0.3	16'- 3"	207	2.1	3'- 9 1/4"	33	0.4
	21"	13'- 2"	203	1.9	3'- 2 1/4"	31	0.4	14'- 9"	233	2.1	3'- 6 3/4"	33	0.4	18'- 0"	276	2.6	4'- 4 1/4"	36	0.5
	24"	14'- 6"	240	2.1	3'- 8 1/4"	34	0.4	16'- 2"	251	2.4	4'- 1 3/4"	36	0.5	19'-10"	318	2.9	5'- 0 3/4"	39	0.6
	27"	15'- 9"	258	2.5	4'- 0 3/4"	38	0.5	17'- 7"	292	2.8	4'- 6 1/4"	39	0.6	21'- 7"	342	3.4	5'- 6 1/4"	44	0.7
	30"	17'- 1"	297	2.8	4'- 5 3/4"	40	0.6	19'- 1"	311	3.1	5'- 0"	42	0.6	23'- 4"	388	3.8	6'- 1 3/4"	47	0.8
	33"	18'- 5"	320	3.3	4'- 9 3/4"	43	0.6	20'- 6"	358	3.6	5'- 4 3/4"	46	0.7	25'- 1"	439	4.4	6'- 7 1/4"	51	0.9
	36"	19'- 8"	401	4.0	5'- 3"	47	0.9	21'-11"	422	4.5	5'-10 3/4"	50	0.9	26'-10"	517	5.5	7'- 2 1/4"	55	1.2
	42"	22'- 3"	476	5.0	6'- 0 3/4"	53	1.1	24'-10"	528	5.6	6'- 8 3/4"	56	1.2	30'- 5"	634	6.9	8'- 3"	76	1.4
	48"	25'-11"	577	6.6	6'- 9 3/4"	60	1.3	28'-10"	637	7.3	7'- 7 1/4"	79	1.5	35'- 4"	791	9.0	9'- 3 3/4"	88	1.8
	54"	28'- 6"	711	7.8	7'- 9"	83	1.6	31'- 9"	781	8.7	8'- 8"	87	1.8	38'-11"	958	10.7	10'- 7 1/4"	97	2.2
	60"	31'- 1"	805	9.2	8'- 6 1/4"	91	1.9	34'- 8"	881	10.2	9'- 6 1/4"	97	2.1	42'- 5"	1113	12.5	11'- 8"	124	2.6
	66"	33'- 8"	907	10.6	9'- 0 3/4"	98	2.1	37'- 6"	1028	11.8	10'- 1 1/4"	102	2.4	46'- 0"	1235	14.5	12'- 4 1/4"	132	2.9
	72"	36'- 3"	1071	12.1	9'- 8"	105	2.4	40'- 5"	1207	13.5	10'- 9 1/4"	110	2.6	49'- 6"	1446	16.6	13'- 2 1/4"	141	3.2
3:1	12"	13'- 6"	178	1.6	1'- 9 3/4"	15	0.2	15'- 0"	189	1.8	2'- 0"	15	0.2	18'- 5"	237	2.2	2'- 5 3/4"	17	0.2
	15"	15'- 3"	212	1.9	2'- 3"	17	0.2	17'- 0"	223	2.1	2'- 6"	17	0.3	20'-10"	276	2.6	3'- 0 3/4"	20	0.3
	18"	17'- 1"	231	2.3	2'- 9"	19	0.3	19'- 1"	259	2.5	3'- 1"	29	0.3	23'- 4"	318	3.1	3'- 9 1/4"	32	0.4
	21"	18'-11"	306	2.7	3'- 2 1/4"	31	0.4	21'- 1"	339	3.0	3'- 6 3/4"	33	0.4	25'-10"	413	3.7	4'- 4 1/4"	36	0.5
	24"	20'- 8"	345	3.1	3'- 8 3/4"	35	0.4	23'- 1"	384	3.5	4'- 1 3/4"	36	0.5	28'- 3"	462	4.2	5'- 0 3/4"	40	0.6
	27"	22'- 6"	376	3.7	4'- 0 3/4"	38	0.5	25'- 1"	438	4.1	4'- 6 1/4"	39	0.6	30'- 9"	522	5.0	5'- 6 1/4"	44	0.7
	30"	24'- 4"	422	4.1	4'- 5 3/4"	40	0.6	27'- 2"	466	4.6	5'- 0"	42	0.6	33'- 3"	578	5.6	6'- 1 3/4"	47	0.8
	33"	26'- 2"	476	4.8	4'-10"	43	0.6	29'- 2"	522	5.3	5'- 4 3/4"	46	0.7	35'- 9"	644	6.5	6'- 7 1/4"	51	0.9
	36"	27'-11"	590	5.9	5'- 3 1/4"	47	0.8	31'- 2"	645	6.6	5'-10 3/4"	50	0.9	38'- 2"	787	8.0	7'- 2 1/4"	56	1.2
	42"	31'- 7"	684	7.3	6'- 0 1/4"	53	1.1	35'- 3"	776	8.2	6'- 8 3/4"	56	1.2	43'- 2"	933	10.0	8'- 3"	79	1.4
	48"	36'- 9"	880	9.6	6'- 9 3/4"	61	1.3	41'- 0"	953	10.7	7'- 7 1/4"	81	1.5	50'- 2"	1166	13.1	9'- 3 3/4"	88	1.8
	54"	40'- 5"	1065	11.4	7'- 9"	85	1.6	45'- 0"	1185	12.7	8'- 8"	89	1.8	55'- 2"	1435	15.5	10'- 7 1/4"	97	2.2
	60"	44'- 0"	1224	13.3	8'- 6 1/4"	93	1.9	49'- 1"	1356	14.8	9'- 6 1/4"	96	2.1	60'- 1"	1627	18.2	11'- 8"	124	2.6
	66"	47'- 7"	1357	15.4	9'- 1"	98	2.1	53'- 1"	1497	17.2	10'- 1 1/4"	103	2.3	65'- 1"	1834	21.1	12'- 4 1/4"	130	2.9
	72"	51'- 3"	1624	17.7	9'- 8"	105	2.3	57'- 2"	1787	19.7	10'- 9 1/4"	109	2.6	70'- 0"	2210	24.1	13'- 2 1/4"	139	3.2
4:1	12"	17'- 7"	232	2.1	1'- 9 3/4"	15	0.2	19'- 8"	259	2.4	2'- 0"	16	0.2	24'- 0"	314	2.9	2'- 5 3/4"	18	0.2
	15"	19'-11"	272	2.5	2'- 3"	17	0.2	22'- 3"	301	2.8	2'- 6"	18	0.3	27'- 3"	361	3.5	3'- 0 3/4"	21	0.3
	18"	22'- 3"	313	3.0	2'- 9"	19	0.3	24'-10"	344	3.3	3'- 1"	29	0.3	30'- 5"	427	4.0	3'- 9 1/4"	32	0.4
	21"	24'- 7"	407	3.6	3'- 2 1/4"	31	0.4	27'- 5"	446	4.0	3'- 6 3/4"	33	0.4	33'- 7"	549	4.9	4'- 4 1/4"	36	0.5
	24"	26'-11"	455	4.1	3'- 8 3/4"	35	0.4	30'- 0"	499	4.5	4'- 1 3/4"	36	0.5	36'- 9"	609	5.6	5'- 0 3/4"	40	0.6
	27"	29'- 3"	514	4.8	4'- 0 3/4"	38	0.5	32'- 7"	562	5.4	4'- 6 1/4"	40	0.6	39'-11"	703	6.6	5'- 6 1/4"	43	0.7
	30"	31'- 7"	568	5.4	4'- 5 3/4"	40	0.6	35'- 3"	620	6.0	5'- 0"	42	0.6	43'- 2"	768	7.4	6'- 1 3/4"	49	0.8
	33"	33'-11"	634	6.2	4'-10"	43	0.7	37'-10"	710	7.0	5'- 4 3/4"	46	0.7	46'- 4"	848	8.5	6'- 7 1/4"	52	0.9
	36"	36'- 3"	776	7.7	5'- 3"	48	0.9	40'- 5"	868	8.6	5'-10 3/4"	49	0.9	49'- 6"	1058	10.6	7'- 2 1/4"	56	1.1
	42"	40'-11"	921	9.6	6'- 0 1/4"	53	1.0	45'- 7"	1022	10.7	6'- 8 3/4"	57	1.2	55'-10"	1262	13.1	8'- 3"	78	1.4
	48"	47'- 7"	1152	12.6	6'-10"	61	1.3	53'- 1"	1268	14.0	7'- 7 1/4"	80	1.5	65'- 1"	1579	17.2	9'- 3 3/4"	86	1.8
	54"	52'- 3"	1416	14.9	7'- 9 1/4"	86	1.6	58'- 4"	1589	16.6	8'- 8"	89	1.8	71'- 5"	1916	20.4	10'- 7 1/4"	95	2.2
	60"	56'-11"	1606	17.5	8'- 6 3/4"	92	1.9	63'- 6"	1798	19.5	9'- 6 1/4"	95	2.1	77'- 9"	2184	23.9	11'- 8"	122	2.6
	66"	61'- 7"	1811	20.2	9'- 0 3/4"	97	2.1	68'- 8"	2011	22.5	10'- 1 1/4"	101	2.4	84'- 2"	2464	27.6	12'- 4 1/4"	131	2.9
	72"	66'- 3"	2142	23.2	9'- 8"	104	2.4	73'-11"	2371	25.9	10'- 9 1/4"	108	2.6	90'- 6"	2929	31.7	13'- 2 1/4"	138	3.2
6:1	12"	25'-11"	342	3.1	1'- 9 3/4"	15	0.2	28'-10"	374	3.5	2'- 0"	16	0.2	35'- 4"	456	4.3	2'- 5 3/4"	17	0.2
	15"	29'- 3"	390	3.7	2'- 3"	17	0.2	32'- 7"	442	4.2	2'- 6"	18	0.2	39'-11"	549	5.1	3'- 0 3/4"	20	0.3
	18"	32'- 7"	459	4.4	2'- 9"	20	0.3	36'- 4"	515	4.9	3'- 1"	29	0.3	44'- 7"	629	6.0	3'- 9 1/4"	33	0.4
	21"	36'- 0"	608	5.3	3'- 2 1/4"	31	0.4	40'- 2"	660	5.9	3'- 6 3/4"	33	0.4	49'- 2"	823	7.2	4'- 4 1/4"	38	0.5
	24"	39'- 4"	672	6.0	3'- 8 3/4"	35	0.4	43'-11"	748	6.7	4'- 1 3/4"	36	0.5	53'- 9"	920	8.2	5'- 0 3/4"	42	0.6
	27"	42'- 8"	770	7.1	4'- 0 3/4"	38	0.5	47'- 8"	852	8.0	4'- 6 1/4"	41	0.5	58'- 4"	1039	9.7	5'- 6 1/4"	45	0.7
	30"	46'- 1"	839	8.0	4'- 5 3/4"	40	0.6	51'- 5"	949	8.9	5'- 0"	44	0.6	62'-11"	1154	10.9	6'- 1 3/4"	48	0.8
	33"	49'- 5"	947	9.2	4'-10"	45	0.7	55'- 2"	1040	10.3	5'- 4 3/4"	48	0.7	67'- 6"	1284	12.6	6'- 7 1/4"	50	0.9
	36"	52'-10"	1151	11.4	5'- 3"	49	0.8	58'-11"	1287	12.7	5'-10 3/4"	51	1.0	72'- 1"	1575	15.6	7'- 2 1/4"	55	1.1
	42"	59'- 6"	1365	14.2	6'- 0 1/4"	55	1.0	66'- 5"	1522	15.8	6'- 8 3/4"	57	1.2	81'- 4"	1867	19.4	8'- 3"	76	1.4
	48"	69'- 4"	1729	18.5	6'-10"	59	1.3	77'- 4"	1934	20.7	7'- 7 1/4"	79	1.5	94'- 9"	2360	25.3	9'- 3 3/4"	86	1.8
	54"	76'- 1"	2130	22.0	7'- 9 1/4"	83	1.6	84'-10"	2370	24.6	8'- 8"	87	1.8	103'-11"	2904	30.1	10'- 7 1/4"	95	2.2
	60"	82'-10"	2414	25.8	8'- 6 3/4"	90	1.9	92'- 5"	2673	28.8	9'- 6 1/4"	94	2.1	113'-2"	3286	35.3	11'- 8"	122	2.6
	66"	89'- 7"	2712	29.9	9'- 0 3/4"	96	2.1	99'-11"	3030	33.3	10'- 1 1/4"	101	2.4	122'-4"	3689	40.8	12'- 4 1/4"	130	2.9
	72"	96'- 3"	3210	34.2	9'- 8"	102	2.4	107'-5"	3572	38.2	10'- 9 1/4"	108	2.6	131'-6"	4364	46.8	13'- 2 1/4"	139	3.2

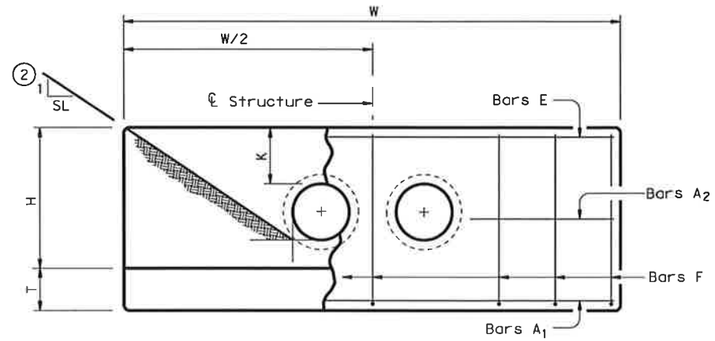

ELEVATION

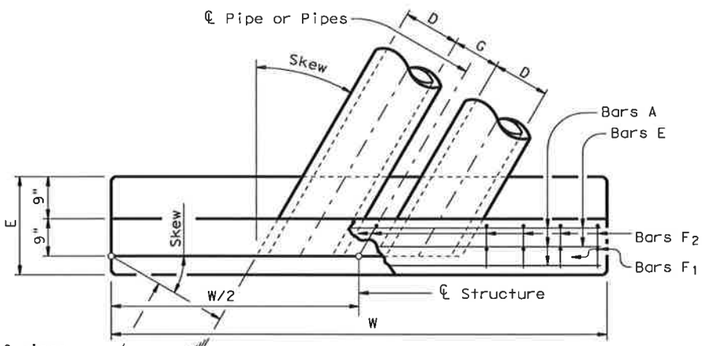

PLAN OF SKEWED PIPES

Showing 30° Skew

Lengths of wings based on SL:1 Slope along this line.

(2) Toe of Slope

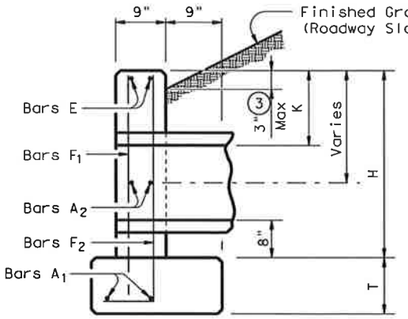

℄ SECTION

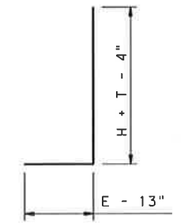

BARS F2

TABLE OF CONSTANT DIMENSIONS

DIA OF PIPE, D	G	K	H	T	E
12"	9"	1'- 0"	2'- 8"	9"	1'- 9"
15"	11"	1'- 0"	2'-11"	9"	1'- 9"
18"	1'- 2"	1'- 0"	3'- 2"	9"	1'- 9"
21"	1'- 4"	1'- 0"	3'- 5"	9"	2'- 0"
24"	1'- 7"	1'- 0"	3'- 8"	9"	2'- 0"
27"	1'- 8"	1'- 0"	3'-11"	9"	2'- 3"
30"	1'-10"	1'- 0"	4'- 2"	9"	2'- 3"
33"	1'-11"	1'- 0"	4'- 5"	9"	2'- 6"
36"	2'- 1"	1'- 0"	4'- 8"	1'- 0"	2'- 6"
42"	2'- 4"	1'- 0"	5'- 2"	1'- 0"	2'- 9"
48"	2'- 7"	1'- 3"	5'-11"	1'- 0"	3'- 0"
54"	3'- 0"	1'- 3"	6'- 5"	1'- 0"	3'- 3"
60"	3'- 3"	1'- 3"	6'-11"	1'- 0"	3'- 6"
66"	3'- 3"	1'- 3"	7'- 5"	1'- 0"	3'- 9"
72"	3'- 4"	1'- 3"	7'-11"	1'- 0"	4'- 0"

TABLE OF REINFORCING STEEL (4)

Bar	Size	Spa	No.
A1	# 5	~	2
A2	# 5	1'-6"	~
E	# 5	~	2
F	# 5	1'-0"	~

GENERAL NOTES:

Designed according to current AASHTO Standard and Interim Specifications.

Reinforcing steel shall be placed with the center of the outside layer of bars 2" from the surface of the concrete.

All reinforcing steel shall be Grade 60.

All concrete shall be Class "C" and shall have a minimum compressive strength of 3600 psi.

No bridge rails of any type may be mounted directly to these culvert headwalls.

(1) Quantities shown are for concrete pipe and will increase slightly for metal pipe installations.

(2) Indicated slope is perpendicular to centerline Pipe or Pipes.

(3) For vehicle safety, curbs shall project no more than 3" above finished grade. Curb heights shall be reduced, if necessary, to meet these requirements. No changes will be made in quantities and no additional compensation will be allowed for this work.

(4) Quantities shown are for one structure end only (one headwall).

DISCLAIMER:
The use of this standard is governed by the "Texas Engineering Practice Act". No warranty of any kind is made by TxDOT for any purpose whatsoever. TxDOT assumes no responsibility for the conversion of this standard to other formats or for incorrect results or damages resulting from its use.

ACC:

LEVELS DISPLAYED

"CONSTRUCTION RECORD DRAWINGS_8-01-2009

Texas Department of Transportation
Bridge Division

CONCRETE HEADWALLS WITH PARALLEL WINGS FOR SKEWED PIPE CULVERTS

CH-PW-S

FILE: chpwsste.dgn	DN: TxDOT	CK: TxDOT	DW: TxDOT	CK: GAF
©TxDOT May 2005	DISTRICT	FEDERAL AID PROJECT		SHEET
REVISIONS				224
	COUNTY	CONTROL	SECT	JOB	HIGHWAY

P-200612-01

DISCLAIMER:
The use of this standard is governed by the "Texas Engineering Practice Act". No warranty of any kind is made by TxDOT for any purpose whatsoever. TxDOT assumes no responsibility for the consequences of the use of this standard for other formats or for incorrect results or damages resulting from its use.

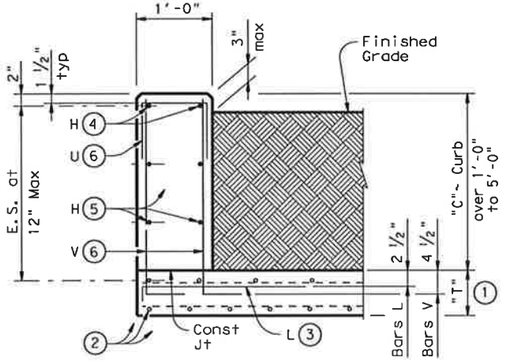

TYPICAL SECTION

Used for Curbs over 1'-0" to 5'-0"

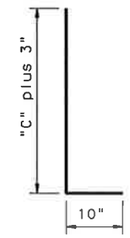

BARS V (#5) (6)

Spaced at 12" max

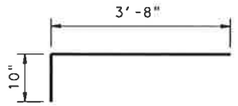

BARS L (#5) (3)

Spaced at 12" max

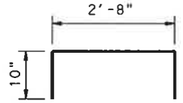

OPTIONAL BARS L (#5) (3)(7)

Spaced at 12" max

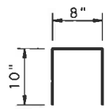

BARS U (#4) (6)

Spaced at 12" max

(1) "T" is equal to the culvert top slab thickness. For Precast Boxes with slabs less than 7", see SCP-MD Standard for additional details.

(2) Normal culvert slab bars adjusted as necessary to clear obstructions.

(3) Place bars L as shown. Tilt hook as necessary to maintain cover.

(4) Place normal culvert curb bars H (#4) as shown. Adjust as necessary to clear obstructions.

(5) Additional bars H (#4) as required to maintain 12" max spa.

(6) Replace normal culvert curb bars K with one bar U and two bars V as shown spaced at 12" max. Adjust length of bars V as necessary to maintain clear cover.

(7) Optional bars L are to be used only for precast box culverts with 3'-0" closure pour.

(8) Quantities shown are for contractor's information only. Quantities are per linear foot of curb length. The values for each section type in table can be interpolated for intermediate values of curb height, "C". Quantity includes bars K (when applicable).

TABLE OF ESTIMATED CURB QUANTITIES (8)

Curb Height "C"	Conc (CY/LF)	Reinf Steel (Lb/LF)
1'-0"	0.037	8.9
1'-6"	0.056	14.3
2'-0"	0.074	15.4
2'-6"	0.093	17.7
3'-0"	0.111	18.8
3'-6"	0.130	21.2
4'-0"	0.148	22.2
4'-6"	0.167	24.6
5'-0"	0.185	25.6

GENERAL NOTES:

Designed according to current AASHTO Standard and Interim Specifications.

These extended curb details have sufficient strength to allow for future retrofit of Type T6 railing. These details are not suitable for the mounting of other rail types. For new construction using T6 railing, use the T6-CM standards.

All reinforcing shall be Grade 60. Adjust reinforcing as necessary to provide 1 ¼" cover.

All concrete for curbs shall be Class "C" with a minimum compressive strength of 3600 psi.

This Curb shall be considered as part of the Box Culvert for payment.

For vehicle safety, the top of the curb shall project no more than 3" above the finished grade.

"CONSTRUCTION RECORD DRAWINGS_8-01-2009

LEVELS DISPLAYED

PATH:

Texas Department of Transportation
Bridge Division

EXTENDED CURB DETAILS

FOR BOX CULVERTS WITH CURBS OVER 1'-0" TO 5'-0" TALL

ECD

FILE: ecdstde1.dgn	DN: GAF	CK:	DW: TxDOT	CK: GAF
©TxDOT May 2005	DISTRICT	FEDERAL AID PROJECT		SHEET
REVISIONS				225
	COUNTY	CONTROL	SECT	JOB	HIGHWAY
				P-200612-01

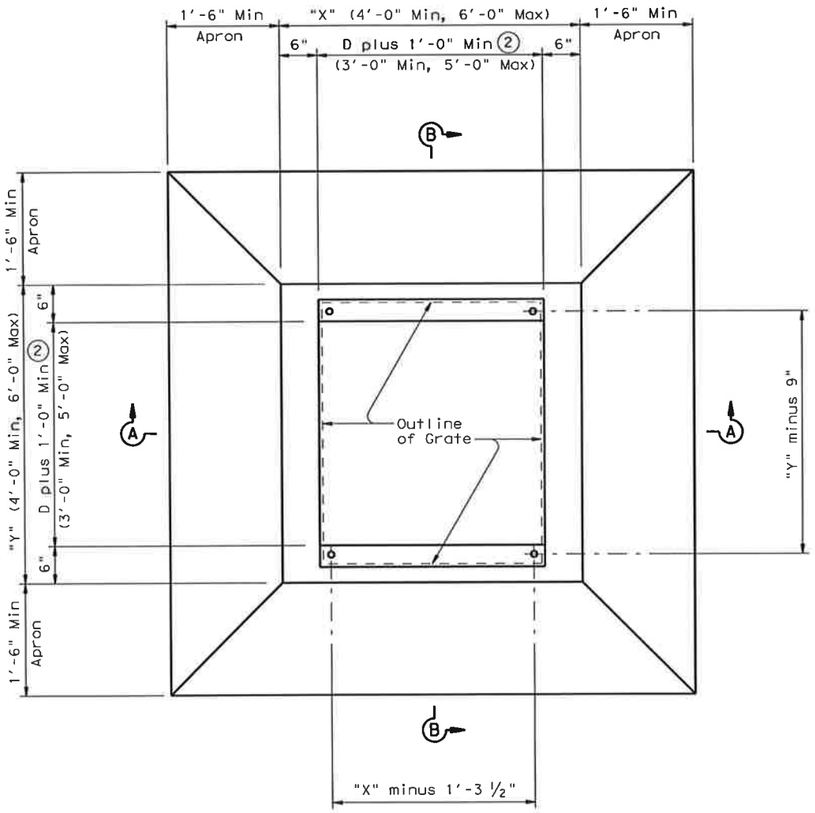

PLAN

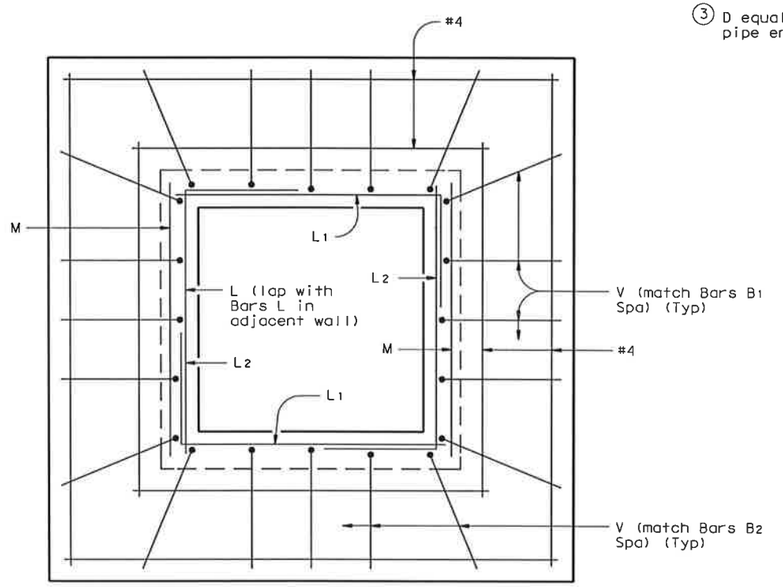

TYPICAL APRON PLAN

(Showing reinforcing in walls and in apron)

1. May be changed as directed by the Engineer.
2. D equals the maximum inside diameter of any pipe entering the wall shown or the opposite wall.
3. D equals the maximum inside diameter of any pipe entering the inlet.

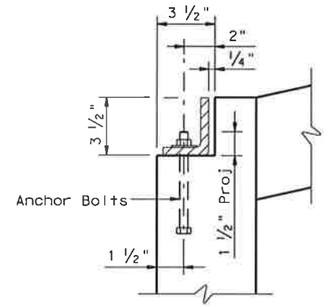

GRATE MOUNTING DETAIL

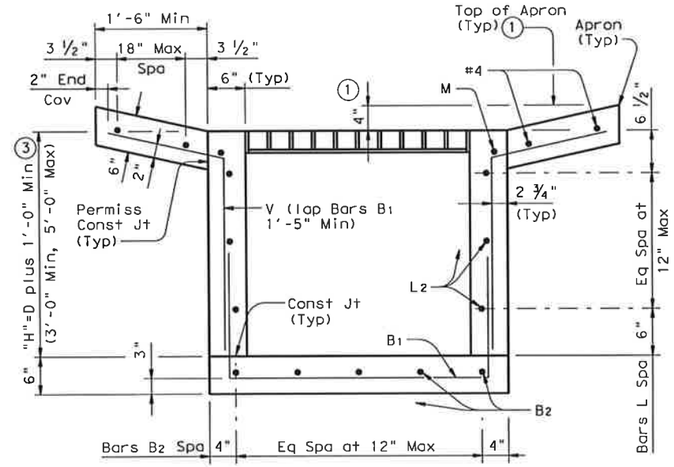

SECTION A-A

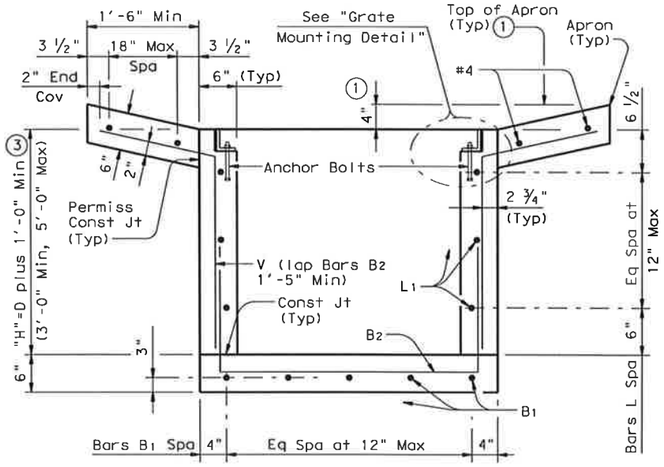

SECTION B-B

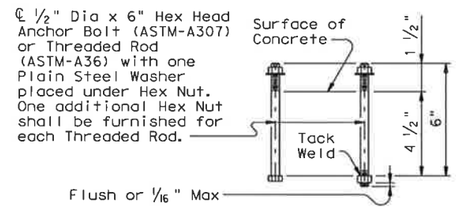

ANCHOR BOLT OPTIONS

SHEET 1 OF 2

Texas Department of Transportation
Bridge Division

HORIZONTAL INLET TYPE H WITH GRATE (MAX 48" DIA PIPES)

IL-H-G

FILE: ilhste01.dgn	DN: TxDOT	CK: TxDOT	DW: TxDOT	CK: TxDOT
© TxDOT May 2005	DISTRICT	FEDERAL AID PROJECT		SHEET 226
REVISIONS	COUNTY	CONTROL	SECT	JOB	HIGHWAY
				P-200612-01

DISCLAIMER:
The use of this standard is governed by the "Texas Engineering Practice Act". No warranty of any kind is made by TxDOT for any purpose whatsoever. TxDOT assumes no responsibility for the conversion of this standard to other formats or for incorrect results or damages resulting from its use.

LEVELS DISPLAYED
PATH:

"CONSTRUCTION RECORD DRAWINGS_8-01-2009

DISCLAIMER:
The use of this standard is governed by the "Texas Engineering Practice Act". No warranty of any kind is made by TxDOT for any purpose whatsoever. TxDOT assumes no responsibility for the conversion of this standard to other formats or for incorrect results or damages resulting from its use.

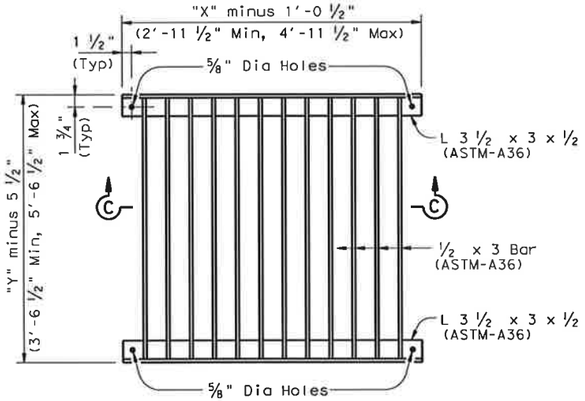

TYPICAL GRATE PLAN

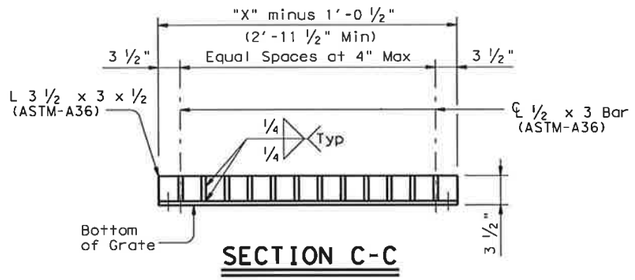

SECTION C-C

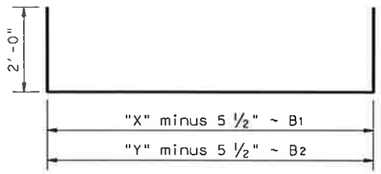

BARS B (#4)

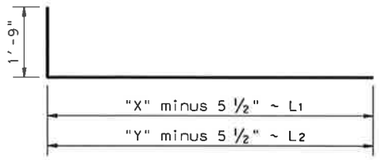

BARS L (#4)

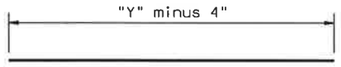

BARS M (#4)

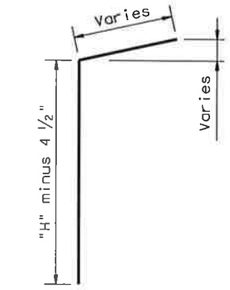

BARS V (#4)

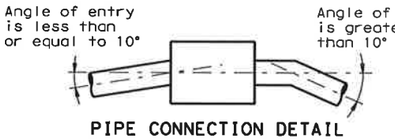

PIPE CONNECTION DETAIL

Connecting pipes should enter within 10° of normal to inlet wall. If necessary, pipe elbow or curved approach alignment should be used to stay within this limit.

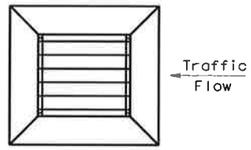

GRATE ORIENTATION DETAIL

If possible, horizontal grate inlet should be oriented such that both traffic and ditch water approach parallel to bars on grate. If this is not possible, orientation must favor traffic flow. Grate is not to be used under direct traffic, rather it is to be used in ditches and medians away from the roadway.

GENERAL NOTES:

When approved, precast inlets with equivalent structural capacity may be furnished. Sealed engineering calculations and drawings shall be submitted for approval prior to construction.

Shop drawings will not be required.

Apron shall be cast-in-place.

In areas of conflict between reinforcing steel, blockouts, pipes, anchor bolts or other reinforcing steel, the reinforcement shall be bent or adjusted to clear as directed by the Engineer.

Anchor Bolts are ½" Dia ASTM A307 Grade A bolts (or A36 threaded rods with one tack welded hex head nut each) with one hex head nut and one plain steel washer.

Structural Steel for grates shall conform to the requirements of ASTM Designation A-36 or AISI Designation M1010-M1020.

All reinforcing steel shall be Grade 60 unless otherwise noted.

All steel components except reinforcing, shall be galvanized after fabrication. Galvanizing damaged during transport or construction shall be repaired in accordance with the specifications.

All concrete shall be Class "A" (f'c = 3,000 psi).

"CONSTRUCTION RECORD DRAWINGS_8-01-2009

Texas Department of Transportation
Bridge Division

HORIZONTAL INLET TYPE H WITH GRATE (MAX 48" DIA PIPES)

IL-H-G

FILE: ilhste01.dgn	DN: TxDOT	CK: TxDOT	DW: TxDOT	CK: TxDOT
© TxDOT May 2005	DISTRICT	FEDERAL AID PROJECT		SHEET
REVISIONS				227
	COUNTY	CONTROL	SECT	JOB	HIGHWAY
				P-200612-01

PATH:
LEVELS DISPLAYED
1

DISCLAIMER:
The use of this standard is governed by the "Texas Engineering Practice Act". No warranty of any kind is made by TxDOT for any purpose whatsoever. TxDOT assumes no responsibility for the conversion of this standard to other formats or for incorrect results or damages resulting from its use.

BILLS OF REINFORCING STEEL (For Box Length = 40 feet)

NUMBER OF SPANS	SECTION DIMENSIONS				Bars B					Bars C & D										Bars E					Bars F_1 ~#4				Bars F_2 ~#4 at 1'-6" Max			Bars M~#4 at 1'-6" Max			Bars Y & Z~#4 at 1'-0" Max					Bars H 4~#4		Bars K		QUANTITIES				
													Bar C		Bar D																													Per foot of Barrel		Curb		Total	
	S	H	T	U	No.	Size	Spa	Length	Wt	No.	Size	Spa	Length	Wt	Length	Wt	No.	Size	Spa	Length	Wt	No.	Spa	Length	Wt	No.	Length	Wt	No.	Bar Y Length	Bar Y Wt	Bar Z Length	Bar Z Wt	Length	Weight	No.	Weight	Conc (CY)	Reinf (Lb)	Conc (CY)	Reinf (Lb)	Conc (CY)	Reinf (Lb)
2	6'-0"	3'-0"	7"	7"	162	#5	6"	13'- 6"	2,281	162	#4	6"	8'-11"	965	7'- 8"	830	194	#5	5"	6'- 0"	1,214	16	9"	39'-9"	425	50	39'-9"	1,328	56	3'- 0"	112	41	4'- 6"	123	7'- 0"	192	13'- 6"	36	30	85	0.789	186.8	1.0	121	32.6	7,591
3	6'-0"	3'-0"	7"	7"	162	#5	6"	20'- 1"	3,393	162	#4	6"	8'-11"	965	7'- 8"	830	194	#5	5"	12'- 7"	2,546	24	9"	39'-9"	637	71	39'-9"	1,885	56	3'- 0"	112	82	4'- 6"	246	7'- 0"	383	20'- 1"	54	42	119	1.138	274.9	1.5	173	47.0	11,170
4	6'-0"	3'-0"	7"	7"	162	#5	6"	26'- 8"	4,506	162	#4	6"	8'-11"	965	7'- 8"	830	194	#5	5"	19'- 2"	3,878	32	9"	39'-9"	850	92	39'-9"	2,443	56	3'- 0"	112	123	4'- 6"	370	7'- 0"	575	26'- 8"	71	56	159	1.487	363.2	2.0	230	61.5	14,759
5	6'-0"	3'-0"	7"	7"	162	#5	6"	33'- 3"	5,618	162	#4	6"	8'-11"	965	7'- 8"	830	194	#5	5"	25'- 9"	5,210	40	9"	39'-9"	1,062	113	39'-9"	3,000	56	3'- 0"	112	164	4'- 6"	493	7'- 0"	767	33'- 3"	89	70	199	1.836	451.4	2.5	288	75.9	18,345
6	6'-0"	3'-0"	7"	7"	162	#5	6"	39'-10"	6,730	162	#4	6"	8'-11"	965	7'- 8"	830	194	#5	5"	32'- 4"	6,542	48	9"	39'-9"	1,275	134	39'-9"	3,558	56	3'- 0"	112	205	4'- 6"	616	7'- 0"	959	39'-10"	106	82	233	2.186	539.7	3.0	339	90.4	21,926
2	6'-0"	4'-0"	7"	7"	162	#5	6"	13'- 6"	2,281	162	#4	6"	9'-11"	1,073	7'- 8"	830	194	#5	5"	6'- 0"	1,214	16	9"	39'-9"	425	50	39'-9"	1,328	56	4'- 0"	150	41	4'- 6"	123	9'- 0"	246	13'- 6"	36	30	85	0.853	191.8	1.0	121	35.1	7,791
3	6'-0"	4'-0"	7"	7"	162	#5	6"	20'- 1"	3,393	162	#4	6"	9'-11"	1,073	7'- 8"	830	194	#5	5"	12'- 7"	2,546	24	9"	39'-9"	637	71	39'-9"	1,885	56	4'- 0"	150	82	4'- 6"	246	9'- 0"	493	20'- 1"	54	42	119	1.224	281.3	1.5	173	50.5	11,426
4	6'-0"	4'-0"	7"	7"	162	#5	6"	26'- 8"	4,506	162	#4	6"	9'-11"	1,073	7'- 8"	830	194	#5	5"	19'- 2"	3,878	32	9"	39'-9"	850	92	39'-9"	2,443	56	4'- 0"	150	123	4'- 6"	370	9'- 0"	739	26'- 8"	71	56	159	1.595	371.0	2.0	230	65.8	15,069
5	6'-0"	4'-0"	7"	7"	162	#5	6"	33'- 3"	5,618	162	#4	6"	9'-11"	1,073	7'- 8"	830	194	#5	5"	25'- 9"	5,210	40	9"	39'-9"	1,062	113	39'-9"	3,000	56	4'- 0"	150	164	4'- 6"	493	9'- 0"	986	33'- 3"	89	70	199	1.966	460.6	2.5	288	81.1	18,710
6	6'-0"	4'-0"	7"	7"	162	#5	6"	39'-10"	6,730	162	#4	6"	9'-11"	1,073	7'- 8"	830	194	#5	5"	32'- 4"	6,542	48	9"	39'-9"	1,275	134	39'-9"	3,558	56	4'- 0"	150	205	4'- 6"	616	9'- 0"	1,232	39'-10"	106	82	233	2.337	550.2	3.0	339	96.5	22,345
2	6'-0"	5'-0"	7"	7"	162	#5	6"	13'- 6"	2,281	162	#4	6"	10'-11"	1,181	7'- 8"	830	194	#5	5"	6'- 0"	1,214	16	9"	39'-9"	425	56	39'-9"	1,487	56	5'- 0"	187	41	4'- 6"	123	11'- 0"	301	13'- 6"	36	30	85	0.918	200.7	1.0	121	37.7	8,150
3	6'-0"	5'-0"	7"	7"	162	#5	6"	20'- 1"	3,393	162	#4	6"	10'-11"	1,181	7'- 8"	830	194	#5	5"	12'- 7"	2,546	24	9"	39'-9"	637	79	39'-9"	2,098	56	5'- 0"	187	82	4'- 6"	246	11'- 0"	603	20'- 1"	54	42	119	1.311	293.0	1.5	173	53.9	11,894
4	6'-0"	5'-0"	7"	7"	162	#5	6"	26'- 8"	4,506	162	#4	6"	10'-11"	1,181	7'- 8"	830	194	#5	5"	19'- 2"	3,878	32	9"	39'-9"	850	102	39'-9"	2,708	56	5'- 0"	187	123	4'- 6"	370	11'- 0"	904	26'- 8"	71	56	159	1.703	385.4	2.0	230	70.1	15,644
5	6'-0"	5'-0"	7"	7"	162	#5	6"	33'- 3"	5,618	162	#4	6"	10'-11"	1,181	7'- 8"	830	194	#5	5"	25'- 9"	5,210	40	9"	39'-9"	1,062	125	39'-9"	3,319	56	5'- 0"	187	164	4'- 6"	493	11'- 0"	1,205	33'- 3"	89	70	199	2.096	477.6	2.5	288	86.3	19,393
6	6'-0"	5'-0"	7"	7"	162	#5	6"	39'-10"	6,730	162	#4	6"	10'-11"	1,181	7'- 8"	830	194	#5	5"	32'- 4"	6,542	48	9"	39'-9"	1,275	148	39'-9"	3,930	56	5'- 0"	187	205	4'- 6"	616	11'- 0"	1,506	39'-10"	106	82	233	2.488	569.9	3.0	339	102.5	23,136
2	6'-0"	6'-0"	7"	7"	162	#5	6"	13'- 6"	2,281	194	#4	5"	11'-11"	1,544	7'- 8"	994	194	#5	5"	6'- 0"	1,214	16	9"	39'-9"	425	62	39'-9"	1,646	56	6'- 0"	224	41	4'- 6"	123	13'- 0"	356	13'- 6"	36	30	85	0.983	220.2	1.0	121	40.3	8,928
3	6'-0"	6'-0"	7"	7"	162	#5	6"	20'- 1"	3,393	194	#4	5"	11'-11"	1,544	7'- 8"	994	194	#5	5"	12'- 7"	2,546	24	9"	39'-9"	637	87	39'-9"	2,310	56	6'- 0"	224	82	4'- 6"	246	13'- 0"	712	20'- 1"	54	42	119	1.397	315.2	1.5	173	57.4	12,779
4	6'-0"	6'-0"	7"	7"	162	#5	6"	26'- 8"	4,506	194	#4	5"	11'-11"	1,544	7'- 8"	994	194	#5	5"	19'- 2"	3,878	32	9"	39'-9"	850	112	39'-9"	2,974	56	6'- 0"	224	123	4'- 6"	370	13'- 0"	1,068	26'- 8"	71	56	159	1.811	410.2	2.0	230	74.4	16,638
5	6'-0"	6'-0"	7"	7"	162	#5	6"	33'- 3"	5,618	194	#4	5"	11'-11"	1,544	7'- 8"	994	194	#5	5"	25'- 9"	5,210	40	9"	39'-9"	1,062	137	39'-9"	3,638	56	6'- 0"	224	164	4'- 6"	493	13'- 0"	1,424	33'- 3"	89	70	199	2.225	505.2	2.5	288	91.5	20,495
6	6'-0"	6'-0"	7"	7"	162	#5	6"	39'-10"	6,730	194	#4	5"	11'-11"	1,544	7'- 8"	994	194	#5	5"	32'- 4"	6,542	48	9"	39'-9"	1,275	162	39'-9"	4,302	56	6'- 0"	224	205	4'- 6"	616	13'- 0"	1,780	39'-10"	106	82	233	2.639	600.2	3.0	339	108.6	24,346

"CONSTRUCTION RECORD DRAWINGS_8-01-2009

H	Bar Dimensions	
	"X"	"Y"
3'-0"	3'-5"	2'-2"
4'-0"	4'-5"	2'-2"
5'-0"	5'-5"	2'-2"
6'-0"	6'-5"	2'-2"

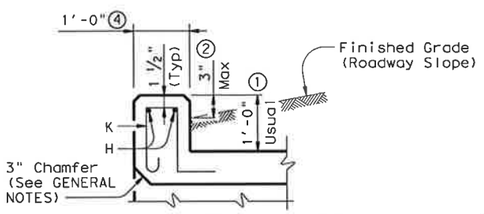

SECTION THRU CURB

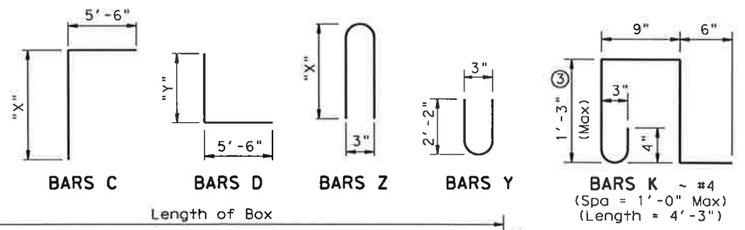

BARS C BARS D BARS Z BARS Y BARS K ~ #4 (Spa = 1'-0" Max) (Length = 4'-3")

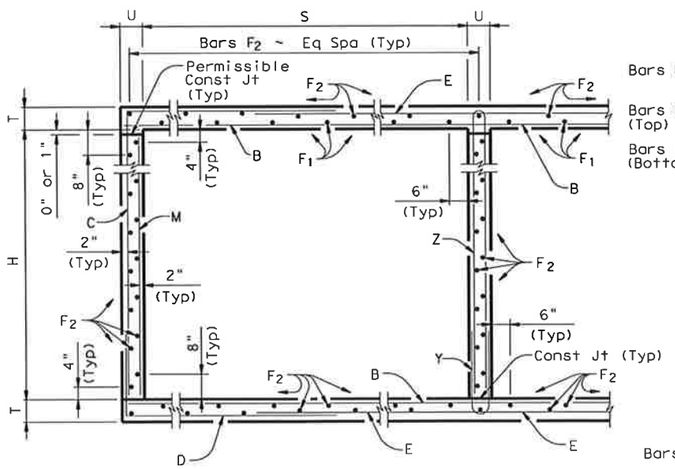

TYPICAL SECTION

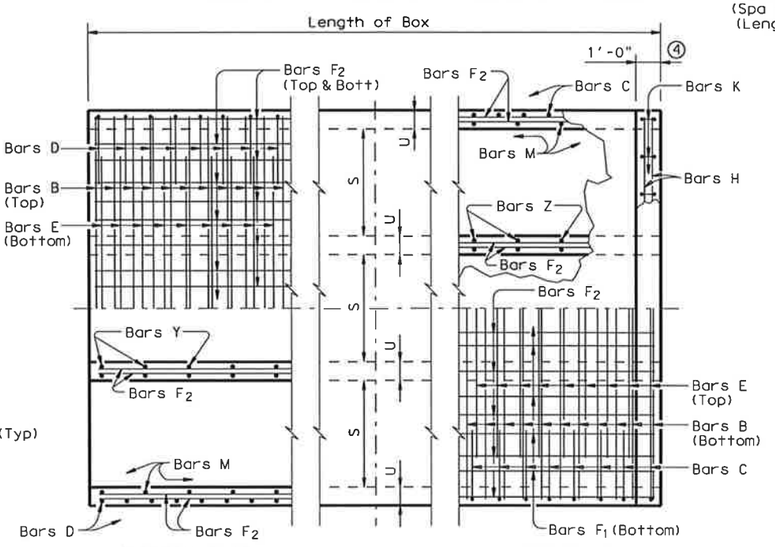

BOTTOM SLAB PART PLANS TOP SLAB

GENERAL NOTES:

Designed according to current AASHTO Standard and Interim Specifications.
Designed to the maximum fill height shown.
All reinforcing steel shall be Grade 60.
All concrete shall be Class "C" with these exceptions: use Class "S" for top slabs of culverts with overlay, with 1-to-2 course surface treatment, or with the top slab as the final riding surface.
Class "C" concrete shall have a minimum compressive strength of 3,600 psi. Class "S" concrete shall have a minimum compressive strength of 4,000 psi.
The use of permanent forms is not allowed.
The bottom edge of the top slab shall be chamfered 3" at the entrance.
Reinforcing bars shall be adjusted to provide a minimum of 1 ¼" clear cover.
Construction joints shown at the flow line may be raised a maximum of 6" at the Contractor's option. If this option is used, Bars M may be cut off or raised, Bars C and D may be reversed, and Bars Y and Z may be reversed.
See standard MC-MD for skewed ends, angle sections and lengthening details.

① 0" min to 5'-0" max. Estimated curb heights are shown elsewhere in the plans. For structures without railing and curbs taller than 1'-0", refer to ECD standard. For structures with T6 bridge rail, refer to T6-CM standard. For structures with bridge rail, other than T6, refer to RAC standard.

② For vehicle safety, the following requirements must be met:
- For structures without bridge rail, curbs shall project no more than 3" above finished grade.
- For structures with bridge rail, curbs shall be flush with finished grade.

Curb heights shall be reduced, if necessary, to meet the above requirements. No changes will be made in quantities and no additional compensation will be allowed for this work.

③ For curbs less than 1'-0" high, tilt bars K or reduce bar height as necessary to maintain cover. For curbs less than 3" high, bars K may be omitted.

④ 1'-0" typical. 2'-0" when RAC standard is referred to elsewhere in the plans.

HS20 LOADING

Texas Department of Transportation
Bridge Division

MULTIPLE BOX CULVERTS CAST-IN-PLACE 6'-0" SPAN 0' TO 16' FILL

MC-6-16

FILE: mc616ste.dgn	DN: GAF	CK: LWW	DW: BWH/TxDOT	CK: GAF
©TxDOT May 2005	DISTRICT	FEDERAL AID PROJECT		SHEET
REVISIONS				228
	COUNTY	CONTROL	SECT	JOB	HIGHWAY
				P-200612-01

ACC:
LEVELS DISPLAYED
1

DISCLAIMER:
The use of this standard is governed by the "Texas Engineering Practice Act". No warranty of any kind is made by TxDOT for any purpose whatsoever. TxDOT assumes no responsibility for the conversion of this standard to other formats or for incorrect results or damages resulting from its use.

ACC:

LEVELS DISPLAYED

BILLS OF REINFORCING STEEL (For Box Length = 40 feet)

NUMBER OF SPANS	SECTION DIMENSIONS				Bars B					Bars C & D									Bars E					Bars F_1 ~#4				Bars F_2 ~#4 at 1'-6" Max			Bars M~#4 at 1'-6" Max			Bars Y & Z~#4 at 10" Max					Bars H 4~#4		Bars K		QUANTITIES					
													Bar C		Bar D																												Per foot of Barrel		Curb		Total	
	S	H	T	U	No.	Size	Spa	Length	Wt	No.	Size	Spa	Length	Wt	Length	Wt	No.	Size	Spa	Length	Wt	No.	Spa	Length	Wt	No.	Length	Wt	No.	Spa	Length	Wt	No.	Length	Wt	No.	Bar Y Length	Bar Y Wt	Bar Z Length	Bar Z Wt	Length	Weight	No.	Weight	Conc (CY)	Reinf (Lb)	Conc (CY)	Reinf (Lb)	Conc (CY)	Reinf (Lb)
2	8'-0"	4'-0"	8"	7"	162	#5	6"	17'- 6"	2,957	194	#4	5"	10'- 7"	1,372	8'- 4"	1,080	194	#6	5"	8'-10"	2,574	22	9"	39'-9"	584	56	39'-9"	1,487	56	4'- 0"	150	49	4'- 8"	153	9'- 2"	300	17'- 6"	47	38	108	1.136	266.4	1.3	155	46.7	10,812
3	8'-0"	4'-0"	8"	7"	162	#5	6"	26'- 1"	4,407	194	#4	5"	10'- 7"	1,372	8'- 4"	1,080	194	#6	5"	17'- 5"	5,075	36	8"	39'-9"	956	80	39'-9"	2,124	56	4'- 0"	150	98	4'- 8"	305	9'- 2"	600	26'- 1"	70	54	153	1.646	401.7	2.0	223	67.8	16,292
4	8'-0"	4'-0"	8"	7"	162	#5	6"	34'- 8"	5,857	194	#4	5"	10'- 7"	1,372	8'- 4"	1,080	194	#6	5"	26'- 0"	7,576	48	8"	39'-9"	1,275	104	39'-9"	2,762	56	4'- 0"	150	147	4'- 8"	458	9'- 2"	900	34'- 8"	93	72	204	2.156	535.8	2.6	297	88.8	21,727
5	8'-0"	4'-0"	8"	7"	162	#5	6"	43'- 3"	7,308	194	#4	5"	10'- 7"	1,372	8'- 4"	1,080	194	#6	5"	34'- 7"	10,077	60	8"	39'-9"	1,593	128	39'-9"	3,399	56	4'- 0"	150	196	4'- 8"	611	9'- 2"	1,200	43'- 3"	116	90	256	2.667	669.8	3.2	372	109.9	27,162
6	8'-0"	4'-0"	8"	7"	162	#5	6"	51'-10"	8,758	194	#4	5"	10'- 7"	1,372	8'- 4"	1,080	194	#6	5"	43'- 2"	12,578	72	8"	39'-9"	1,912	152	39'-9"	4,036	56	4'- 0"	150	245	4'- 8"	764	9'- 2"	1,500	51'-10"	138	106	301	3.177	803.8	3.9	439	131.0	32,589
2	8'-0"	5'-0"	8"	7"	194	#5	5"	17'- 6"	3,541	194	#4	5"	11'- 7"	1,501	8'- 4"	1,080	194	#6	5"	8'-10"	2,574	22	9"	39'-9"	584	62	39'-9"	1,646	56	5'- 0"	187	49	4'- 8"	153	11'- 2"	366	17'- 6"	47	38	108	1.201	290.8	1.3	155	49.3	11,787
3	8'-0"	5'-0"	8"	7"	194	#5	5"	26'- 1"	5,278	194	#4	5"	11'- 7"	1,501	8'- 4"	1,080	194	#6	5"	17'- 5"	5,075	36	8"	39'-9"	956	88	39'-9"	2,337	56	5'- 0"	187	98	4'- 8"	305	11'- 2"	731	26'- 1"	70	54	153	1.733	436.3	2.0	223	71.3	17,673
4	8'-0"	5'-0"	8"	7"	194	#5	5"	34'- 8"	7,015	194	#4	5"	11'- 7"	1,501	8'- 4"	1,080	194	#6	5"	26'- 0"	7,576	48	8"	39'-9"	1,275	114	39'-9"	3,027	56	5'- 0"	187	147	4'- 8"	458	11'- 2"	1,097	34'- 8"	93	72	204	2.264	580.4	2.6	297	93.2	23,513
5	8'-0"	5'-0"	8"	7"	194	#5	5"	43'- 3"	8,751	194	#4	5"	11'- 7"	1,501	8'- 4"	1,080	194	#6	5"	34'- 7"	10,077	60	8"	39'-9"	1,593	140	39'-9"	3,717	56	5'- 0"	187	196	4'- 8"	611	11'- 2"	1,462	43'- 3"	116	90	256	2.796	724.5	3.2	372	115.0	29,351
6	8'-0"	5'-0"	8"	7"	194	#5	5"	51'-10"	10,488	194	#4	5"	11'- 7"	1,501	8'- 4"	1,080	194	#6	5"	43'- 2"	12,578	72	8"	39'-9"	1,912	166	39'-9"	4,408	56	5'- 0"	187	245	4'- 8"	764	11'- 2"	1,828	51'-10"	138	106	301	3.328	868.7	3.9	439	137.0	35,185
2	8'-0"	6'-0"	8"	7"	194	#5	5"	17'- 6"	3,541	194	#4	5"	12'- 7"	1,631	8'- 4"	1,080	194	#6	5"	8'-10"	2,574	22	9"	39'-9"	584	68	39'-9"	1,806	56	6'- 0"	224	49	4'- 8"	153	13'- 2"	431	17'- 6"	47	38	108	1.265	300.6	1.3	155	51.9	12,179
3	8'-0"	6'-0"	8"	7"	194	#5	5"	26'- 1"	5,278	194	#4	5"	12'- 7"	1,631	8'- 4"	1,080	194	#6	5"	17'- 5"	5,075	36	8"	39'-9"	956	96	39'-9"	2,549	56	6'- 0"	224	98	4'- 8"	305	13'- 2"	862	26'- 1"	70	54	153	1.819	449.0	2.0	223	74.8	18,183
4	8'-0"	6'-0"	8"	7"	194	#5	5"	34'- 8"	7,015	194	#4	5"	12'- 7"	1,631	8'- 4"	1,080	194	#6	5"	26'- 0"	7,576	48	8"	39'-9"	1,275	124	39'-9"	3,293	56	6'- 0"	224	147	4'- 8"	458	13'- 2"	1,293	34'- 8"	93	72	204	2.372	596.1	2.6	297	97.5	24,142
5	8'-0"	6'-0"	8"	7"	194	#5	5"	43'- 3"	8,751	194	#4	5"	12'- 7"	1,631	8'- 4"	1,080	194	#6	5"	34'- 7"	10,077	60	8"	39'-9"	1,593	152	39'-9"	4,036	56	6'- 0"	224	196	4'- 8"	611	13'- 2"	1,724	43'- 3"	116	90	256	2.926	743.2	3.2	372	120.2	30,099
6	8'-0"	6'-0"	8"	7"	194	#5	5"	51'-10"	10,488	194	#4	5"	12'- 7"	1,631	8'- 4"	1,080	194	#6	5"	43'- 2"	12,578	72	8"	39'-9"	1,912	180	39'-9"	4,780	56	6'- 0"	224	245	4'- 8"	764	13'- 2"	2,155	51'-10"	138	106	301	3.479	890.3	3.9	439	143.1	36,051
2	8'-0"	7'-0"	8"	7"	194	#5	5"	17'- 6"	3,541	194	#4	5"	13'- 7"	1,760	8'- 4"	1,080	194	#6	5"	8'-10"	2,574	22	9"	39'-9"	584	68	39'-9"	1,806	56	7'- 0"	262	49	4'- 8"	153	15'- 2"	496	17'- 6"	47	38	108	1.330	306.4	1.3	155	54.5	12,411
3	8'-0"	7'-0"	8"	7"	194	#5	5"	26'- 1"	5,278	194	#4	5"	13'- 7"	1,760	8'- 4"	1,080	194	#6	5"	17'- 5"	5,075	36	8"	39'-9"	956	96	39'-9"	2,549	56	7'- 0"	262	98	4'- 8"	305	15'- 2"	993	26'- 1"	70	54	153	1.905	456.5	2.0	223	78.2	18,481
4	8'-0"	7'-0"	8"	7"	194	#5	5"	34'- 8"	7,015	194	#4	5"	13'- 7"	1,760	8'- 4"	1,080	194	#6	5"	26'- 0"	7,576	48	8"	39'-9"	1,275	124	39'-9"	3,293	56	7'- 0"	262	147	4'- 8"	458	15'- 2"	1,489	34'- 8"	93	72	204	2.480	605.2	2.6	297	101.8	24,505
5	8'-0"	7'-0"	8"	7"	194	#5	5"	43'- 3"	8,751	194	#4	5"	13'- 7"	1,760	8'- 4"	1,080	194	#6	5"	34'- 7"	10,077	60	8"	39'-9"	1,593	152	39'-9"	4,036	56	7'- 0"	262	196	4'- 8"	611	15'- 2"	1,986	43'- 3"	116	90	256	3.056	753.9	3.2	372	125.4	30,528
6	8'-0"	7'-0"	8"	7"	194	#5	5"	51'-10"	10,488	194	#4	5"	13'- 7"	1,760	8'- 4"	1,080	194	#6	5"	43'- 2"	12,578	72	8"	39'-9"	1,912	180	39'-9"	4,780	56	7'- 0"	262	245	4'- 8"	764	15'- 2"	2,482	51'-10"	138	106	301	3.631	902.7	3.9	439	149.1	36,545
2	8'-0"	8'-0"	8"	7"	194	#5	5"	17'- 6"	3,541	162	#5	6"	14'- 7"	2,464	8'- 9"	1,478	194	#6	5"	8'-10"	2,574	22	9"	39'-9"	584	74	39'-9"	1,965	56	8'- 0"	299	49	4'- 8"	153	17'- 2"	562	17'- 6"	47	38	108	1.395	340.5	1.3	155	57.1	13,775
3	8'-0"	8'-0"	8"	7"	194	#5	5"	26'- 1"	5,278	162	#5	6"	14'- 7"	2,464	8'- 9"	1,478	194	#6	5"	17'- 5"	5,075	36	8"	39'-9"	956	104	39'-9"	2,762	56	8'- 0"	299	98	4'- 8"	305	17'- 2"	1,124	26'- 1"	70	54	153	1.992	493.5	2.0	223	81.7	19,964
4	8'-0"	8'-0"	8"	7"	194	#5	5"	34'- 8"	7,015	162	#5	6"	14'- 7"	2,464	8'- 9"	1,478	194	#6	5"	26'- 0"	7,576	48	8"	39'-9"	1,275	134	39'-9"	3,558	56	8'- 0"	299	147	4'- 8"	458	17'- 2"	1,686	34'- 8"	93	72	204	2.588	645.2	2.6	297	106.1	26,106
5	8'-0"	8'-0"	8"	7"	194	#5	5"	43'- 3"	8,751	162	#5	6"	14'- 7"	2,464	8'- 9"	1,478	194	#6	5"	34'- 7"	10,077	60	8"	39'-9"	1,593	164	39'-9"	4,355	56	8'- 0"	299	196	4'- 8"	611	17'- 2"	2,248	43'- 3"	116	90	256	3.185	796.9	3.2	372	130.6	32,248
6	8'-0"	8'-0"	8"	7"	194	#5	5"	51'-10"	10,488	162	#5	6"	14'- 7"	2,464	8'- 9"	1,478	194	#6	5"	43'- 2"	12,578	72	8"	39'-9"	1,912	194	39'-9"	5,151	56	8'- 0"	299	245	4'- 8"	764	17'- 2"	2,809	51'-10"	138	106	301	3.782	948.6	3.9	439	155.2	38,382

"CONSTRUCTION RECORD DRAWINGS_8-01-2009

H	Bar Dimensions	
	"X"	"Y"
4'-0"	4'-6"	2'-3"
5'-0"	5'-6"	2'-3"
6'-0"	6'-6"	2'-3"
7'-0"	7'-6"	2'-3"
8'-0"	8'-6"	2'-8"

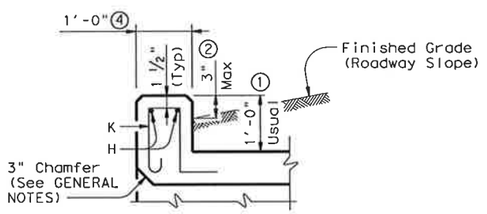

SECTION THRU CURB

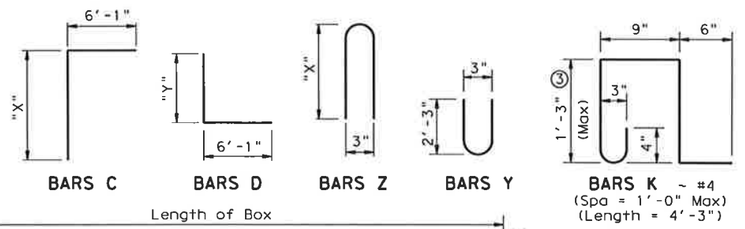

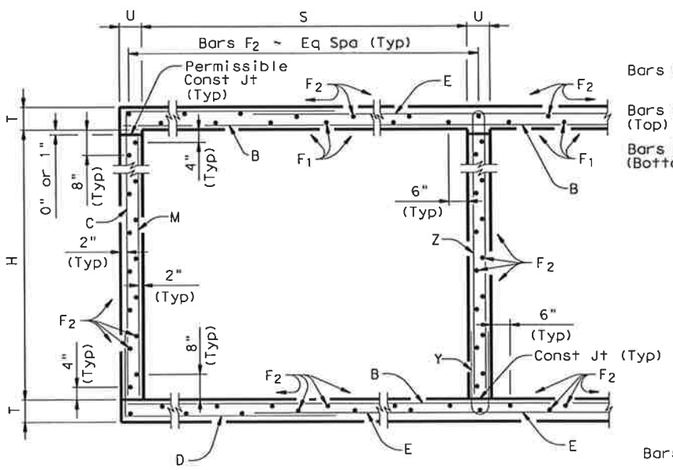

TYPICAL SECTION

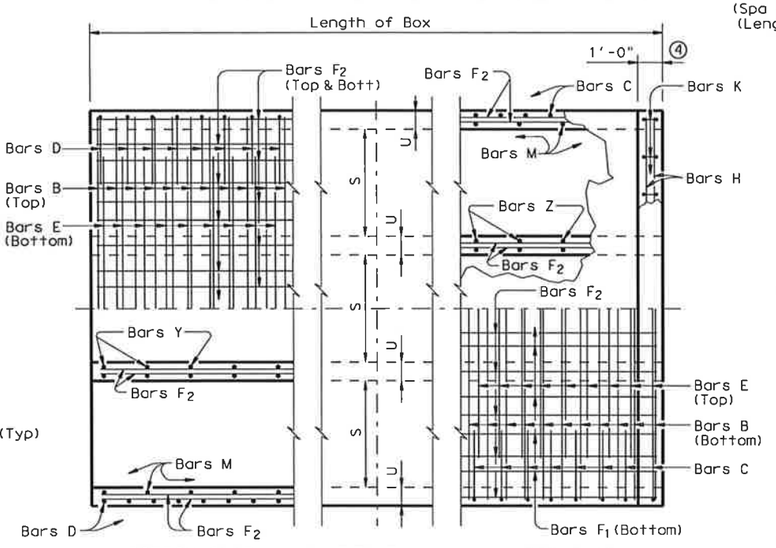

BOTTOM SLAB | PART PLANS | TOP SLAB

GENERAL NOTES:

Designed according to current AASHTO Standard and Interim Specifications.
Designed to the maximum fill height shown.
All reinforcing steel shall be Grade 60.
All concrete shall be Class "C" with these exceptions: use Class "S" for top slabs of culverts with overlay, with 1-to-2 course surface treatment, or with the top slab as the final riding surface.
Class "C" concrete shall have a minimum compressive strength of 3,600 psi.
Class "S" concrete shall have a minimum compressive strength of 4,000 psi.
The use of permanent forms is not allowed.
The bottom edge of the top slab shall be chamfered 3" at the entrance.
Reinforcing bars shall be adjusted to provide a minimum of 1 1/4" clear cover.
Construction joints shown at the flow line may be raised a maximum of 6" at the Contractor's option. If this option is used, Bars M may be cut off or raised, Bars C and D may be reversed, and Bars Y and Z may be reversed.
See standard MC-MD for skewed ends, angle sections and lengthening details.

① 0" min to 5'-0" max. Estimated curb heights are shown elsewhere in the plans. For structures without railing and curbs taller than 1'-0", refer to ECD standard. For structures with T6 bridge rail, refer to T6-CM standard. For structures with bridge rail, other than T6, refer to RAC standard.

② For vehicle safety, the following requirements must be met:
- For structures without bridge rail, curbs shall project no more than 3" above finished grade.
- For structures with bridge rail, curbs shall be flush with finished grade.

Curb heights shall be reduced, if necessary, to meet the above requirements. No changes will be made in quantities and no additional compensation will be allowed for this work.

③ For curbs less than 1'-0" high, tilt bars K or reduce bar height as necessary to maintain cover. For curbs less than 3" high, bars K may be omitted.

④ 1'-0" typical. 2'-0" when RAC standard is referred to elsewhere in the plans.

HS20 LOADING

Texas Department of Transportation
Bridge Division

MULTIPLE BOX CULVERTS CAST-IN-PLACE 8'-0" SPAN 0' TO 13' FILL

MC-8-13

FILE: mc813ste.dgn	DN: GAF	CK: LMW	DW: BWH/TxDOT	CK: GAF
©TxDOT May 2005	DISTRICT	FEDERAL AID PROJECT		SHEET
REVISIONS				229
	COUNTY	CONTROL	SECT	JOB	HIGHWAY

P-200612-01

DISCLAIMER:
The use of this standard is governed by the "Texas Engineering Practice Act". No warranty of any kind is made by TxDOT for any purpose whatsoever. TxDOT assumes no responsibility for the conversion of this standard to other formats or for incorrect results or damages resulting from its use.

BILLS OF REINFORCING STEEL (For Box Length = 40 feet)

NUMBER OF SPANS	SECTION DIMENSIONS				Bars B⑤				Bars C & D						Bars E					Bars F_1 ~#4				Bars F_2 ~#4 at 1'-6" Max			Bars M~#4 at 1'-6" Max			Bars Y & Z~#4 at 8" Max					Bars H ⑤ 4~#4		Bars K		QUANTITIES: Per foot of Barrel		Curb		Total	
												Bar C		Bar D																															
	S	H	T	U	No.	Size	Spa	Length	Wt	No.	Size	Spa	Length	Wt	Length	Wt	No.	Size	Spa	Length	Wt	No.	Spa	Length	Wt	No.	Length	Wt	No.	Length	Wt	No.	Bar Y Length	Bar Y Wt	Bar Z Length	Bar Z Wt	Length	Weight	No.	Weight	Conc (CY)	Reinf (Lb)	Conc (CY)	Reinf (Lb)	Conc (CY)	Reinf (Lb)
2	10'-0"	5'-0"	8"	7"	162	#6	6"	21'- 6"	5,231	194	#4	5"	13'- 4"	1,728	10'- 1"	1,307	162	#6	6"	11'- 0"	2,677	30	8"	39'-9"	797	72	39'-9"	1,912	56	5'- 0"	187	61	4'- 8"	190	11'- 2"	455	21'- 6"	57	46	131	1.398	362.1	1.6	188	57.5	14,672
3	10'-0"	5'-0"	8"	7"	162	#6	6"	32'- 1"	7,807	194	#4	5"	13'- 4"	1,728	10'- 1"	1,307	162	#6	6"	21'- 7"	5,252	45	8"	39'-9"	1,195	103	39'-9"	2,735	56	5'- 0"	187	122	4'- 8"	380	11'- 2"	910	32'- 1"	86	66	187	2.029	537.5	2.4	273	83.6	21,774
4	10'-0"	5'-0"	8"	7"	162	#6	6"	42'- 8"	10,382	194	#4	5"	13'- 4"	1,728	10'- 1"	1,307	162	#6	6"	32'- 2"	7,827	60	8"	39'-9"	1,593	134	39'-9"	3,558	56	5'- 0"	187	183	4'- 8"	570	11'- 2"	1,365	42'- 8"	114	88	250	2.659	712.9	3.2	364	109.6	28,881
5	10'-0"	5'-0"	8"	7"	162	#6	6"	53'- 3"	12,957	194	#4	5"	13'- 4"	1,728	10'- 1"	1,307	162	#6	6"	42'- 9"	10,402	75	8"	39'-9"	1,991	165	39'-9"	4,381	56	5'- 0"	187	244	4'- 8"	761	11'- 2"	1,820	53'- 3"	142	110	312	3.290	888.4	4.0	454	135.6	35,988
6	10'-0"	5'-0"	8"	7"	162	#6	6"	66'- 5"	16,161	194	#4	5"	13'- 4"	1,728	10'- 1"	1,307	162	#6	6"	53'- 4"	12,977	90	8"	39'-9"	2,390	196	39'-9"	5,204	56	5'- 0"	187	305	4'- 8"	951	11'- 2"	2,275	65'- 7"	175	130	369	3.921	1,079.5	4.7	544	161.5	43,724
2	10'-0"	6'-0"	8"	7"	162	#6	6"	21'- 6"	5,231	194	#4	5"	14'- 4"	1,857	10'- 1"	1,307	162	#6	6"	11'- 0"	2,677	30	8"	39'-9"	797	78	39'-9"	2,071	56	6'- 0"	224	61	4'- 8"	190	13'- 2"	537	21'- 6"	57	46	131	1.463	372.3	1.6	188	60.1	15,079
3	10'-0"	6'-0"	8"	7"	162	#6	6"	32'- 1"	7,807	194	#4	5"	14'- 4"	1,857	10'- 1"	1,307	162	#6	6"	21'- 7"	5,252	45	8"	39'-9"	1,195	111	39'-9"	2,947	56	6'- 0"	224	122	4'- 8"	380	13'- 2"	1,073	32'- 1"	86	66	187	2.115	551.1	2.4	273	87.0	22,315
4	10'-0"	6'-0"	8"	7"	162	#6	6"	42'- 8"	10,382	194	#4	5"	14'- 4"	1,857	10'- 1"	1,307	162	#6	6"	32'- 2"	7,827	60	8"	39'-9"	1,593	144	39'-9"	3,824	56	6'- 0"	224	183	4'- 8"	570	13'- 2"	1,610	42'- 8"	114	88	250	2.767	729.9	3.2	364	113.9	29,558
5	10'-0"	6'-0"	8"	7"	162	#6	6"	53'- 3"	12,957	194	#4	5"	14'- 4"	1,857	10'- 1"	1,307	162	#6	6"	42'- 9"	10,402	75	8"	39'-9"	1,991	177	39'-9"	4,700	56	6'- 0"	224	244	4'- 8"	761	13'- 2"	2,146	53'- 3"	142	110	312	3.420	908.6	4.0	454	140.8	36,799
6	10'-0"	6'-0"	8"	7"	162	#6	6"	66'- 5"	16,161	194	#4	5"	14'- 4"	1,857	10'- 1"	1,307	162	#6	6"	53'- 4"	12,977	90	8"	39'-9"	2,390	210	39'-9"	5,576	56	6'- 0"	224	305	4'- 8"	951	13'- 2"	2,683	65'- 7"	175	130	369	4.072	1,103.2	4.7	544	167.6	44,670
2	10'-0"	7'-0"	8"	7"	162	#6	6"	21'- 6"	5,231	194	#4	5"	15'- 4"	1,987	10'- 1"	1,307	162	#6	6"	11'- 0"	2,677	30	8"	39'-9"	797	78	39'-9"	2,071	56	7'- 0"	262	61	4'- 8"	190	15'- 2"	618	21'- 6"	57	46	131	1.528	378.5	1.6	188	62.7	15,328
3	10'-0"	7'-0"	8"	7"	162	#6	6"	32'- 1"	7,807	194	#4	5"	15'- 4"	1,987	10'- 1"	1,307	162	#6	6"	21'- 7"	5,252	45	8"	39'-9"	1,195	111	39'-9"	2,947	56	7'- 0"	262	122	4'- 8"	380	15'- 2"	1,236	32'- 1"	86	66	187	2.202	559.3	2.4	273	90.5	22,646
4	10'-0"	7'-0"	8"	7"	162	#6	6"	42'- 8"	10,382	194	#4	5"	15'- 4"	1,987	10'- 1"	1,307	162	#6	6"	32'- 2"	7,827	60	8"	39'-9"	1,593	144	39'-9"	3,824	56	7'- 0"	262	183	4'- 8"	570	15'- 2"	1,854	42'- 8"	114	88	250	2.876	740.2	3.2	364	118.2	29,970
5	10'-0"	7'-0"	8"	7"	162	#6	6"	53'- 3"	12,957	194	#4	5"	15'- 4"	1,987	10'- 1"	1,307	162	#6	6"	42'- 9"	10,402	75	8"	39'-9"	1,991	177	39'-9"	4,700	56	7'- 0"	262	244	4'- 8"	761	15'- 2"	2,472	53'- 3"	142	110	312	3.549	921.0	4.0	454	146.0	37,293
6	10'-0"	7'-0"	8"	7"	162	#6	6"	66'- 5"	16,161	194	#4	5"	15'- 4"	1,987	10'- 1"	1,307	162	#6	6"	53'- 4"	12,977	90	8"	39'-9"	2,390	210	39'-9"	5,576	56	7'- 0"	262	305	4'- 8"	951	15'- 2"	3,090	65'- 7"	175	130	369	4.223	1,117.5	4.7	544	173.6	45,245
2	10'-0"	8'-0"	8"	7"	162	#6	6"	21'- 6"	5,231	194	#4	5"	16'- 4"	2,117	10'- 1"	1,307	162	#6	6"	11'- 0"	2,677	30	8"	39'-9"	797	84	39'-9"	2,230	56	8'- 0"	299	61	4'- 8"	190	17'- 2"	700	21'- 6"	57	46	131	1.593	388.7	1.6	188	65.3	15,736
3	10'-0"	8'-0"	8"	7"	162	#6	6"	32'- 1"	7,807	194	#4	5"	16'- 4"	2,117	10'- 1"	1,307	162	#6	6"	21'- 7"	5,252	45	8"	39'-9"	1,195	119	39'-9"	3,160	56	8'- 0"	299	122	4'- 8"	380	17'- 2"	1,399	32'- 1"	86	66	187	2.288	572.9	2.4	273	93.9	23,189
4	10'-0"	8'-0"	8"	7"	162	#6	6"	42'- 8"	10,382	194	#4	5"	16'- 4"	2,117	10'- 1"	1,307	162	#6	6"	32'- 2"	7,827	60	8"	39'-9"	1,593	154	39'-9"	4,089	56	8'- 0"	299	183	4'- 8"	570	17'- 2"	2,099	42'- 8"	114	88	250	2.984	757.1	3.2	364	122.6	30,647
5	10'-0"	8'-0"	8"	7"	162	#6	6"	53'- 3"	12,957	194	#4	5"	16'- 4"	2,117	10'- 1"	1,307	162	#6	6"	42'- 9"	10,402	75	8"	39'-9"	1,991	189	39'-9"	5,019	56	8'- 0"	299	244	4'- 8"	761	17'- 2"	2,798	53'- 3"	142	110	312	3.679	941.3	4.0	454	151.2	38,105
6	10'-0"	8'-0"	8"	7"	162	#6	6"	66'- 5"	16,161	194	#4	5"	16'- 4"	2,117	10'- 1"	1,307	162	#6	6"	53'- 4"	12,977	90	8"	39'-9"	2,390	224	39'-9"	5,948	56	8'- 0"	299	305	4'- 8"	951	17'- 2"	3,498	65'- 7"	175	130	369	4.374	1,141.2	4.7	544	179.7	46,192
2	10'-0"	9'-0"	8"	7"	162	#6	6"	21'- 6"	5,231	194	#4	5"	17'- 4"	2,246	10'- 1"	1,307	162	#6	6"	11'- 0"	2,677	30	8"	39'-9"	797	90	39'-9"	2,390	56	9'- 0"	337	61	4'- 8"	190	19'- 2"	781	21'- 6"	57	46	131	1.657	398.9	1.6	188	67.9	16,144
3	10'-0"	9'-0"	8"	7"	162	#6	6"	32'- 1"	7,807	194	#4	5"	17'- 4"	2,246	10'- 1"	1,307	162	#6	6"	21'- 7"	5,252	45	8"	39'-9"	1,195	127	39'-9"	3,372	56	9'- 0"	337	122	4'- 8"	380	19'- 2"	1,562	32'- 1"	86	66	187	2.374	586.5	2.4	273	97.4	23,731
4	10'-0"	9'-0"	8"	7"	162	#6	6"	42'- 8"	10,382	194	#4	5"	17'- 4"	2,246	10'- 1"	1,307	162	#6	6"	32'- 2"	7,827	60	8"	39'-9"	1,593	164	39'-9"	4,355	56	9'- 0"	337	183	4'- 8"	570	19'- 2"	2,343	42'- 8"	114	88	250	3.092	774.0	3.2	364	126.9	31,324
5	10'-0"	9'-0"	8"	7"	162	#6	6"	53'- 3"	12,957	194	#4	5"	17'- 4"	2,246	10'- 1"	1,307	162	#6	6"	42'- 9"	10,402	75	8"	39'-9"	1,991	201	39'-9"	5,337	56	9'- 0"	337	244	4'- 8"	761	19'- 2"	3,124	53'- 3"	142	110	312	3.809	961.6	4.0	454	156.4	38,916
6	10'-0"	9'-0"	8"	7"	162	#6	6"	66'- 5"	16,161	162	#5	6"	17'- 4"	2,929	10'- 6"	1,774	162	#6	6"	53'- 4"	12,977	90	8"	39'-9"	2,390	238	39'-9"	6,320	56	9'- 0"	337	305	4'- 8"	951	19'- 2"	3,905	65'- 7"	175	130	369	4.526	1,193.6	4.7	544	185.7	48,288
2	10'-0"	10'-0"	8"	7"	162	#6	6"	21'- 6"	5,231	162	#5	6"	18'- 4"	3,098	10'- 6"	1,774	162	#6	6"	11'- 0"	2,677	30	8"	39'-9"	797	90	39'-9"	2,390	56	10'- 0"	374	61	4'- 8"	190	21'- 2"	862	21'- 6"	57	46	131	1.722	434.8	1.6	188	70.5	17,581
3	10'-0"	10'-0"	8"	7"	162	#6	6"	32'- 1"	7,807	162	#5	6"	18'- 4"	3,098	10'- 6"	1,774	162	#6	6"	21'- 7"	5,252	45	8"	39'-9"	1,195	127	39'-9"	3,372	56	10'- 0"	374	122	4'- 8"	380	21'- 2"	1,725	32'- 1"	86	66	187	2.461	624.4	2.4	273	100.8	25,250
4	10'-0"	10'-0"	8"	7"	162	#6	6"	42'- 8"	10,382	162	#5	6"	18'- 4"	3,098	10'- 6"	1,774	162	#6	6"	32'- 2"	7,827	60	8"	39'-9"	1,593	164	39'-9"	4,355	56	10'- 0"	374	183	4'- 8"	570	21'- 2"	2,587	42'- 8"	114	88	250	3.200	814.0	3.2	364	131.2	32,924
5	10'-0"	10'-0"	8"	7"	162	#6	6"	53'- 3"	12,957	162	#5	6"	18'- 4"	3,098	10'- 6"	1,774	162	#6	6"	42'- 9"	10,402	75	8"	39'-9"	1,991	201	39'-9"	5,337	56	10'- 0"	374	244	4'- 8"	761	21'- 2"	3,450	53'- 3"	142	110	312	3.938	1,003.6	4.0	454	161.5	40,598
6	10'-0"	10'-0"	8"	7"	162	#6	6"	66'- 5"	16,161	162	#5	6"	18'- 4"	3,098	10'- 6"	1,774	162	#6	6"	53'- 4"	12,977	90	8"	39'-9"	2,390	238	39'-9"	6,320	56	10'- 0"	374	305	4'- 8"	951	21'- 2"	4,312	65'- 7"	175	130	369	4.677	1,208.9	4.7	544	191.8	48,901

H	Bar Dimensions "X"	"Y"
5'-0"	5'-6"	2'- 3"
6'-0"	6'-6"	2'- 3"
7'-0"	7'-6"	2'- 3"
8'-0"	8'-6"	2'- 3"
9'-0"	9'-6"	2'- 3"
10'-0"	10'-6"	2'- 8"

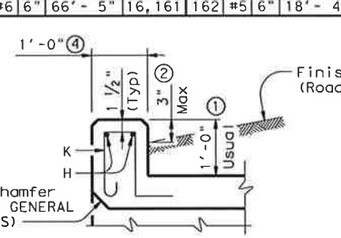

SECTION THRU CURB

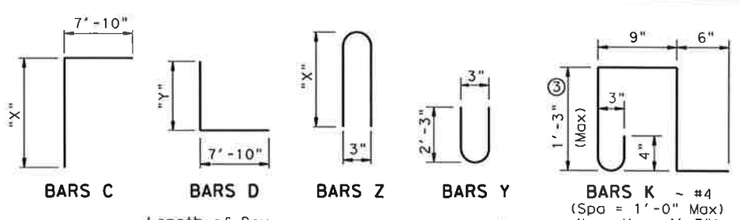

BARS C BARS D BARS Z BARS Y BARS K ~ #4 (Spa = 1'-0" Max) (Length = 4'-3")

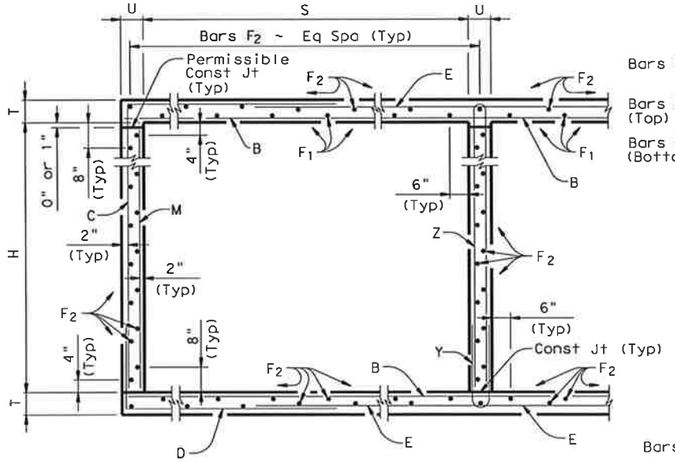

TYPICAL SECTION

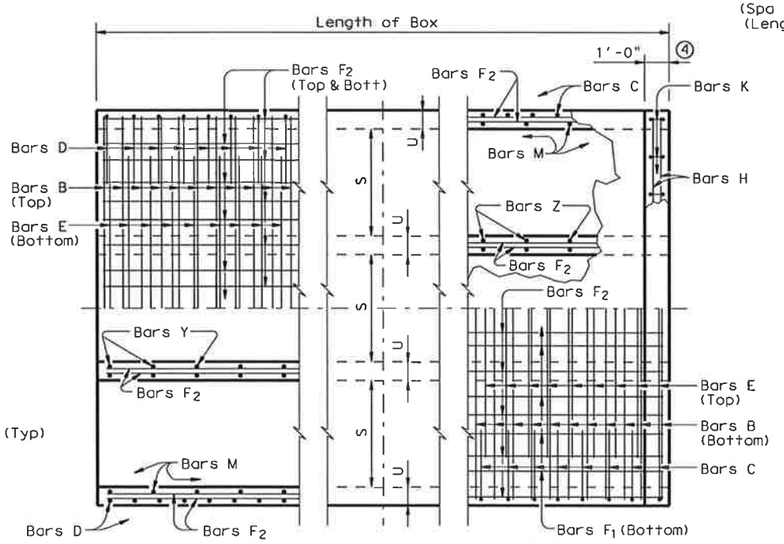

BOTTOM SLAB PART PLANS TOP SLAB

GENERAL NOTES:

Designed according to current AASHTO Standard and Interim Specifications.
Designed to the maximum fill height shown.
All reinforcing steel shall be Grade 60.
All concrete shall be Class "C" with these exceptions: use Class "S" for top slabs of culverts with overlay, with 1-to-2 course surface treatment, or with the top slab as the final riding surface.
Class "C" concrete shall have a minimum compressive strength of 3,600 psi.
Class "S" concrete shall have a minimum compressive strength of 4,000 psi.
The use of permanent forms is not allowed.
The bottom edge of the top slab shall be chamfered 3" at the entrance.
Reinforcing bars shall be adjusted to provide a minimum of 1 ¼" clear cover.
Construction joints shown at the flow line may be raised a maximum of 6" at the Contractor's option. If this option is used, Bars M may be cut off or raised, Bars C and D may be reversed, and Bars Y and Z may be reversed.
See standard MC-MD for skewed ends, angle sections and lengthening details.

"CONSTRUCTION RECORD DRAWINGS _8-01-2009

① 0" min to 5'-0" max. Estimated curb heights are shown elsewhere in the plans. For structures without railing and curbs taller than 1'-0", refer to ECD standard. For structures with T6 bridge rail, refer to T6-CM standard. For structures with bridge rail, other than T6, refer to RAC standard.

② For vehicle safety, the following requirements must be met:
- For structures without bridge rail, curbs shall project no more than 3" above finished grade.
- For structures with bridge rail, curbs shall be flush with finished grade.
Curb heights shall be reduced, if necessary, to meet the above requirements. No changes will be made in quantities and no additional compensation will be allowed for this work.

③ For curbs less than 1'-0" high, tilt bars K or reduce bar height as necessary to maintain cover. For curbs less than 3" high, bars K may be omitted.

④ 1'-0" typical. 2'-0" when RAC standard is referred to elsewhere in the plans.

⑤ Bar lengths over 60' include one bar lap as follows:
#4 = 1'-9", #5 = 2'-2", & #6 = 2'-7"
For Epoxy coated reinforcing, bar laps shall be as follows:
#4 = 2'-7", #5 = 3'-3", & #6 = 3'-10"

HS20 LOADING

Texas Department of Transportation
Bridge Division

MULTIPLE BOX CULVERTS CAST-IN-PLACE
10'-0" SPAN
0' TO 7' FILL

MC-10-7

FILE: mc107ste.dgn	DN: GAF	CK: LMW	DW: BWH/TxDOT	CK: GAF
©TxDOT May 2005	DISTRICT	FEDERAL AID PROJECT		SHEET
REVISIONS				230
	COUNTY	CONTROL	SECT	JOB	HIGHWAY
				P-200612-01

ACC:
LEVELS DISPLAYED

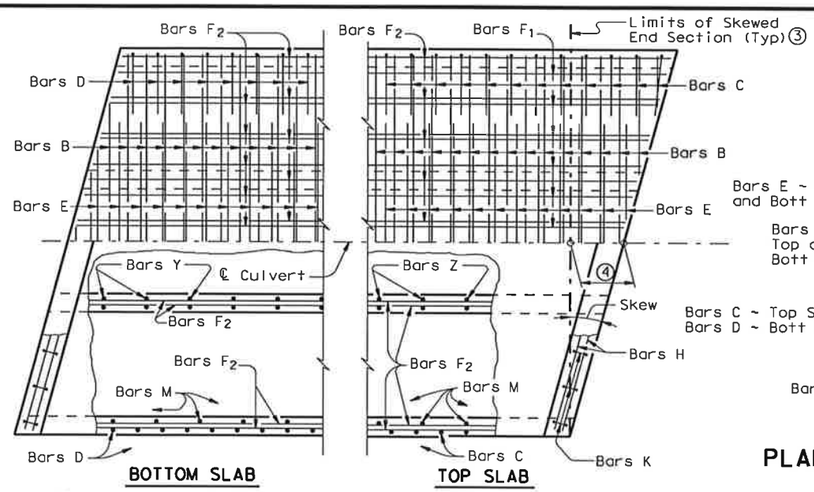

PLAN OF SKEWED ENDS ~ FROM 0° TO 15° ⑦

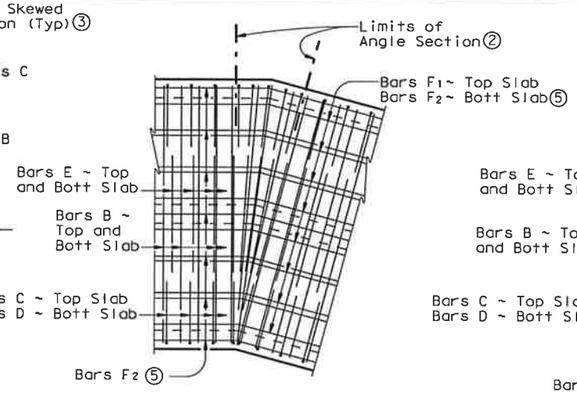

PLAN OF ANGLE SECTION ~ FROM 0° TO 15°

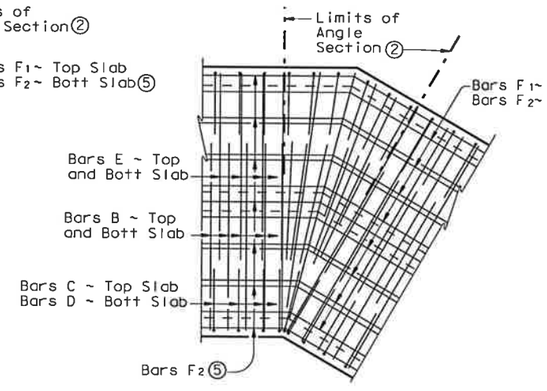

PLAN OF ANGLE SECTION ~ OVER 15° TO 30°

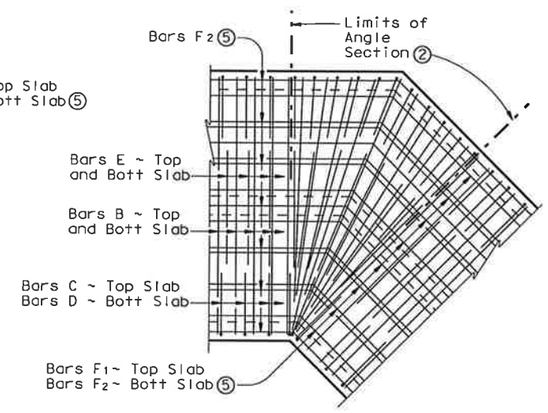

PLAN OF ANGLE SECTION ~ OVER 30° TO 45°

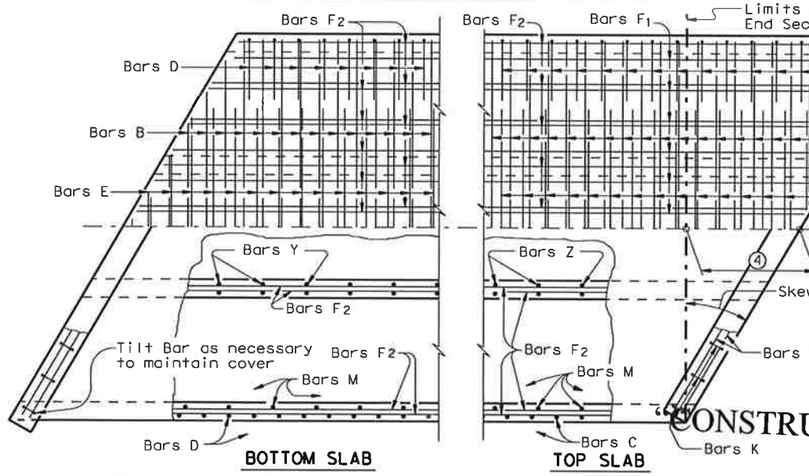

PLAN OF SKEWED ENDS ~ OVER 15° TO 30°

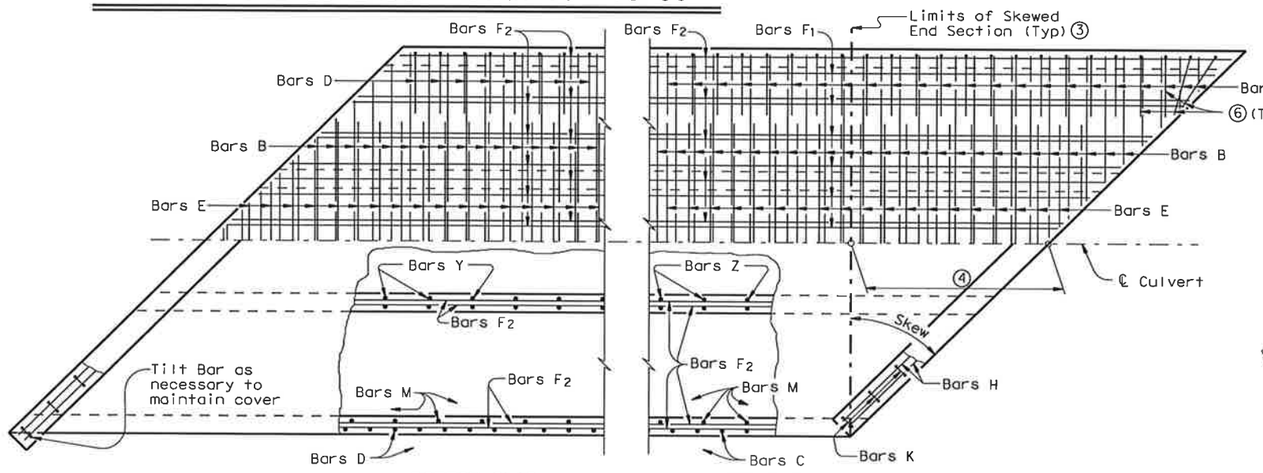

PLAN OF SKEWED ENDS ~ OVER 30° TO 45°

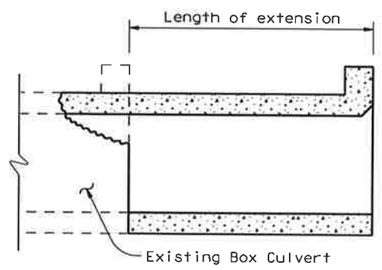

LENGTHENING DETAIL ①

GENERAL NOTES:

Designed according to current AASHTO Standard and Interim Specifications.

All reinforcing steel shall be Grade 60.

All concrete shall be Class "C" with these exceptions: use Class "S" for top slabs of culverts with overlay, with 1-to-2 course surface treatment, or with the top slab as the final riding surface.

Class "C" concrete shall have a minimum compressive strength of 3,600 psi. Class "S" concrete shall have a minimum compressive strength of 4,000 psi.

Refer to Multiple Box Culverts Cast-in-Place standard for details of straight sections of culvert. For skewed sections and angle sections refer to Multiple Box Culverts Cast-in-Place standard for slab and wall dimensions, bar sizes, maximum bar spacing, and any other details not shown. For Skewed ends with curbs, adjust length of Bars H, number of Bars K, curb concrete volume and reinforcing steel weight by dividing the values shown on the culvert standards by the cosine of the skew angle.

The use of permanent forms is not allowed.

Laps for Bars H, when required, shall be 1'-9" for uncoated bars and 2'-7" for epoxy coated.

① For box culverts with less than 2'-0" of fill, the top slab shall be broken back to provide a minimum 1'-10" lap of the existing longitudinal bars with the longitudinal bars in the extension. If the depth of fill is 2'-0" or greater, the top slab shall be broken back to provide a 1'-0" minimum embedment of existing longitudinal reinforcing into the extension. Alternatively, if the fill height is greater than 2'-0", the existing curb may be left in place and 2'-0" long #6 bars shall be drilled and grouted 1'-0" into the existing top slab at 1'-6" center to center spacing. Wings and apron shall be broken back as necessary to install the extension. Exposed wingwall and apron reinforcing may be removed or cleaned and included in the extension. When lengthening existing box culverts with dimensions different than current standard dimensions, horizontal and vertical transitions shall be formed as directed by the Engineer. Bottom slabs shall match to maintain an uninterrupted flow line. Existing and new reinforcing shall be field bent into transition maintaining specified cover requirements. For top slabs of culverts with overlay, with 1-to-2 course surface treatment, or with the top slab as the final riding surface, the "H" dimension may be adjusted to provide a smooth riding surface.

② When the spacing between Bars B or Bars E becomes less than half of the normal spacing, bars shall be cut to avoid fouling

③ The length of Bars B and E will vary in the skewed end sections

④ [One half of overall width] x [Tan of the skew angle]

⑤ Bars F1 and F2 shall be continuous through the angle section. They shall be bent to remain parallel to the walls of the Box Culvert.

⑥ When necessary to avoid fouling in acute corners, the slab extension leg of Bars C and Bars D may be shortened to a minimum of 1'-6" for skews of 30° and 45°.

⑦ For skews of 15° or less, the contractor has the option of placing Bars B, C, D and E parallel to the skewed end while maintaining spacing along centerline box. Lengths of Bars B and E shown on the standards shall be increased to accommodate the skew.

HS20 LOADING

DISCLAIMER:
The use of this standard is governed by the "Texas Engineering Practice Act". No warranty is made by TxDOT for any purpose whatsoever. TxDOT assumes no responsibility for the conversion of this standard to other formats or for incorrect results or damages resulting from its use.

ACTIVE FILE LEVELS DISPLAYED

COMMENTS:

CONSTRUCTION RECORD DRAWINGS_8-01-2009

Texas Department of Transportation
Bridge Division

MULTIPLE BOX CULVERTS CAST-IN-PLACE MISCELLANEOUS DETAILS

MC-MD

FILE: mc-mdste.dgn	DN: GAF	CK: LMW	DW: BWH/TxDOT	CK: GAF		
©TxDOT May 2005	DISTRICT	FEDERAL AID PROJECT			SHEET	
REVISIONS					231	
	COUNTY		CONTROL	SECT	JOB	HIGHWAY
					P-200612-01	

DISCLAIMER:
The use of this standard is governed by the "Texas Engineering Practice Act". No warranty of any kind is made by TxDOT for any purpose whatsoever. TxDOT assumes no responsibility for the conversion of this standard to other formats or for incorrect results or damages resulting from its use.

TABLE OF DIMENSIONS & REINFORCING STEEL
(Wings for One Structure End)

Dimensions					Variable Reinforcing				Estimated ④ Quantities per ft of wing (2~Wings)		Estimated Quantities per ft of Toewall (1~Toewall)	
					Bars J1		Bars J2					
Maximum Wingwall Height Hw	W	X	Y	Z	Size	Spa	Size	Spa	Reinf (Lb/Ft)	Conc (CY/Ft)	Reinf (Lb/Ft)	Conc (CY/Ft)
2'-6"	2'-10"	10"	1'- 0"	7"	#4	1'-0"	#4	1'-0"	43.13	0.406	6.85	0.071
2'-9"	2'-10"	10"	1'- 0"	7"	#4	1'-0"	#4	1'-0"	43.80	0.424	6.85	0.071
3'-0"	2'-10"	10"	1'- 0"	7"	#4	1'-0"	#4	1'-0"	44.47	0.444	6.85	0.071
3'-3"	2'-10"	10"	1'- 0"	7"	#4	1'-0"	#4	1'-0"	47.81	0.462	6.85	0.071
3'-6"	2'-10"	10"	1'- 0"	7"	#4	1'-0"	#4	1'-0"	48.48	0.480	6.85	0.071
4'-0"	3'- 2"	1'- 2"	1'- 0"	7"	#4	1'-0"	#4	1'-0"	50.26	0.532	6.85	0.071
4'-6"	3'- 2"	1'- 2"	1'- 0"	7"	#4	1'-0"	#4	1'-0"	54.27	0.568	6.85	0.071
5'-0"	3'- 9"	1'- 7"	1'- 2"	7"	#4	1'-0"	#4	1'-0"	57.94	0.632	6.96	0.075
5'-6"	3'- 9"	1'- 7"	1'- 2"	7"	#4	1'-0"	#4	1'-0"	61.95	0.668	6.96	0.075
6'-0"	4'- 4"	2'- 0"	1'- 4"	7"	#5	1'-0"	#5	1'-0"	75.16	0.730	7.07	0.078
6'-6"	4'- 4"	2'- 0"	1'- 4"	7"	#5	1'-0"	#5	1'-0"	79.54	0.768	7.07	0.078
7'-0"	5'- 0"	2'- 3"	1'- 9"	8"	#5	1'-0"	#5	1'-0"	86.65	0.864	8.07	0.093
7'-6"	5'- 0"	2'- 3"	1'- 9"	8"	#5	1'-0"	#5	1'-0"	91.03	0.902	8.07	0.093
8'-0"	5'- 6"	2'- 8"	1'-10"	8"	#5	6"	#5	6"	133.54	0.962	8.13	0.095
8'-6"	5'- 6"	2'- 8"	1'-10"	8"	#5	6"	#5	6"	138.96	1.000	8.13	0.095
9'-6"	6'- 0"	2'-10"	2'- 2"	9"	#5	6"	#5	6"	151.43	1.136	8.41	0.110
10'-6"	6'- 5"	3'- 0"	2'- 5"	9"	#6	6"	#5	6"	190.76	1.234	8.57	0.117
11'-6"	7'- 2"	3'- 6"	2'- 8"	11"	#6	6"	#6	6"	224.62	1.438	9.52	0.140
12'-6"	7'- 8"	3'- 9"	2'-11"	1'- 0"	#7	6"	#6	6"	277.90	1.592	9.74	0.157
13'-6"	8'- 2"	4'- 0"	3'- 2"	1'- 2"	#8	6"	#6	6"	343.21	1.804	10.02	0.186
14'-6"	8'-10"	4'- 5"	3'- 5"	1'- 4"	#9	6"	#6	6"	427.43	2.046	10.30	0.218
15'-6"	9'- 6"	4'-10"	3'- 8"	1'- 6"	#9	6"	#7	6"	484.01	2.302	11.24	0.253
16'-0"	9'-11"	5'- 0"	3'-11"	1'- 7"	#9	6"	#7	6"	500.21	2.448	11.47	0.279

TABLE OF WINGWALL REINFORCING (2~Wings)

Bar	Size	No.	Spa
D1	#5	~	1'-0"
D2	#5	~	1'-0"
E1	#4	~	1'-0"
F	#4	~	1'-0"
G	#5	~	1'-0"
M1	#4	4	~
P	#4	~	1'-0"
V	#4	~	1'-0"

TABLE OF TOEWALL REINFORCING

Bar	Size	No	Spa
J3	#4	~	1'-0"
M2	#4	2	~
E2	#4	~	1'-0"

WING DIMENSION CALCULATIONS:

Formulas: (All values are in Feet)

Hw = H + T + C

Lw = (Hw) (SL) ÷ Cosine (Φ)

For Cast-in-place culverts:

Ltw = [(N) (S) + (N + 1) (U)] ÷ (Cosine Φ)

For Precast culverts:

Ltw = [(N) (2 U + S) + (N − 1) (0.5')] ÷ (Cosine Φ)

Total Wingwall Area (Two Wings ~ S.F.) = (2) (Hw) (Lw)

Hw = Height of Wingwall
Lw = Length of Wingwall
Ltw = Culvert Toewall Length
N = Number of Culvert Spans
SL:1 = Channel Slope ratio. (Horizontal: 1 Vertical, Usual value is 2:1)
Φ = Culvert Skew

See applicable box culvert standard for S, H, T and U values.

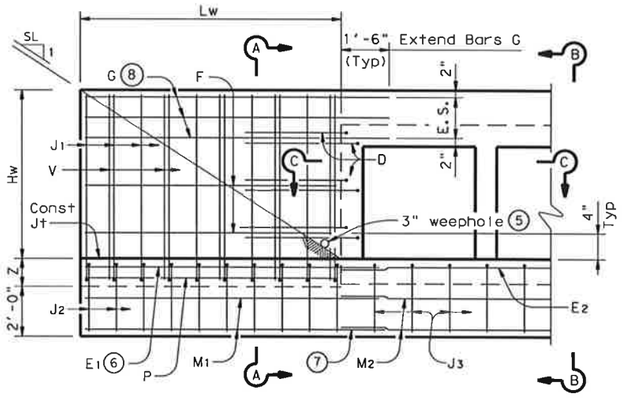

PARTIAL ELEVATION

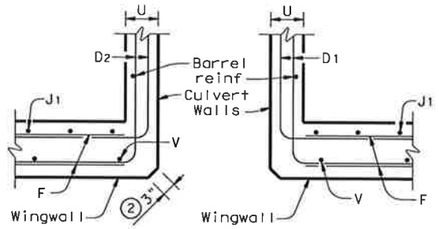

SECTION C-C

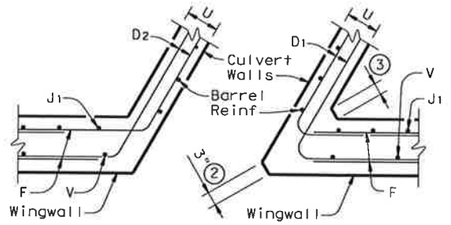

SECTION C-C

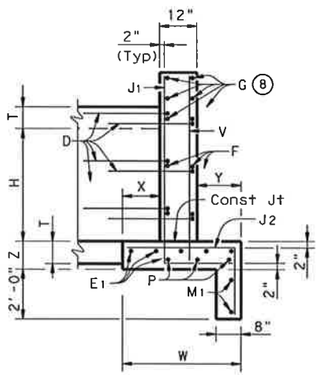

SECTION A-A
(Showing Wing Reinf)

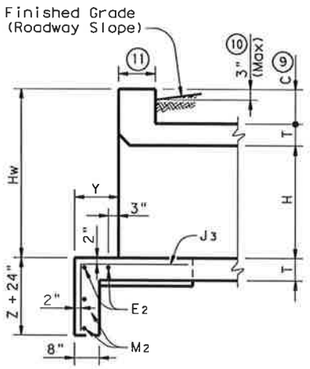

SECTION B-B
(Showing Toewall Reinf)

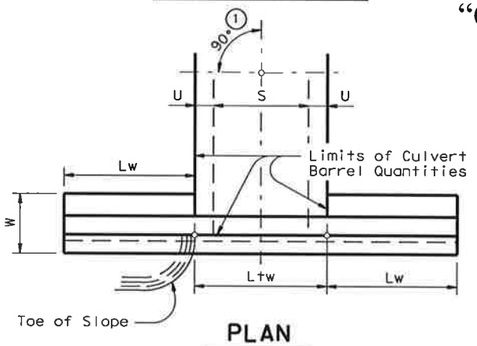

PLAN

DETAILS FOR NON-SKEWED BOX CULVERTS

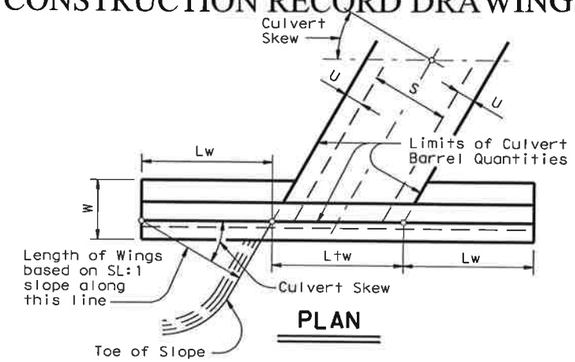

PLAN

DETAILS FOR SKEWED BOX CULVERTS
(Showing 30° Skew)

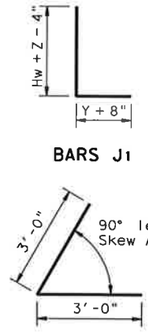

BARS J1

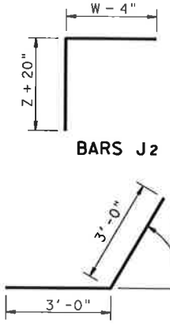

BARS J2

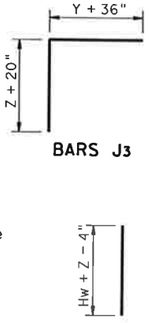

BARS J3

BARS D1

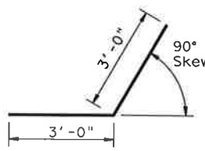

BARS D2

BARS V

GENERAL NOTES:

1. Skew Angle = 0°
2. At discharge end, chamfer may be ¾".
3. For 15° Skew ~ 1"
   For 30° Skew ~ 2"
   For 45° Skew ~ 3"
4. Quantities shown are for two wings. To determine total quantities for two wings, multiply the tabulated values by Lw.
5. Provide weepholes for Hw = 5'-0" and greater. Fill around weepholes with coarse gravel.
6. Extend Bars E1 1'-6" minimum into the bottom slab of the culvert.
7. Lap Bars M1 1'-6" minimum with Bars M2.
8. Bars G shall be equally spaced at 1'-0" maximum, placed as shown. There shall be at least 4 Bars G per wing.
9. 0" min to 5'-0" max. For T6 or C6 Rail, see T6-CM standard for additional details. For all other rail types, refer to the RAC standard. For curbs without rail and greater than 1'-0" high, see ECD standard for additional details. Estimated curb heights are shown elsewhere in the plans.
10. For vehicle safety, the following requirements must be met:
    - For structures without bridge rail, curbs shall project no more than 3" above finished grade.
    - For structures with bridge rail, curbs shall be flush with finished grade.

    Curb heights shall be reduced, if necessary, to meet the above requirements. No changes will be made in quantities and no additional compensation will be allowed for this work.
11. 1'-0" typical. 2'-0" typical when RAC standard is referenced elsewhere in the plans.

GENERAL NOTES:

Designed according to current AASHTO Standard and Interim Specifications.

All reinforcing steel shall be Grade 60.

All concrete shall be Class "C" and shall have a minimum compressive strength of 3600 psi.

All reinforcing bars shall be adjusted to provide a minimum of 1 ¼" clear cover.

When structure is founded on solid rock, depth of toewalls for culverts and wingwalls may be reduced or eliminated as directed by the Engineer.

See BCS sheet for additional dimensions and information.

The quantities for concrete and reinforcing steel resulting from the formulas given on this sheet are for Contractor's information only.

"CONSTRUCTION RECORD DRAWINGS_8-01-2009

ACC:
LEVELS DISPLAYED
1

Texas Department of Transportation
Bridge Division

CONCRETE WINGWALLS WITH PARALLEL WINGS FOR SKEWED AND NON-SKEWED BOX CULVERTS

PW

FILE: pwstde01.dgn	DN: GAF	CK: CAT	DW: TxDOT	CK: GAF
©TxDOT May 2005	DISTRICT	FEDERAL AID PROJECT		SHEET
REVISIONS				252
	COUNTY	CONTROL	SECT	JOB	HIGHWAY

P-200612-01

DISCLAIMER:
The use of this standard is governed by the "Texas Engineering Practice Act". No warranty of any kind is made by TxDOT for any purpose whatsoever. TxDOT assumes no responsibility for errors or omissions in these standards or for other formats or for incorrect results or damages resulting from its use.

SECTION DIMENSIONS				FILL HEIGHT	BILLS OF REINFORCING STEEL (For Box Length = 40 feet)																												QUANTITIES					
					Bars B					Bars C							Bars D							Bars E~#4 at 18" Max			Bars F_1 ~#4				Bars F_2~#4 at 18" Max			Bars H 4~#4		Bars K		Per foot of Barrel		Curb		Total	
S	H	T	U		No.	Size	Spa	Length	Weight	No.	Size	Spa	Length	Weight	"X"	"Y"	No.	Size	Spa	Length	Weight	"Y"	"Z"	No.	Length	Wt	No.	Spa	Length	Wt	No.	Length	Wt	Length	Wt	No.	Wt	Conc (CY)	Reinf (Lb)	Conc (CY)	Reinf (Lb)	Conc (CY)	Reinf (Lb)
3'-0"	2'-0"	7"	7"	30'	138	#4	7"	3'-11"	361	98	#4	10"	4'- 2"	273	2'- 5"	1'- 9"	98	#4	10"	3'-11"	256	1'- 9"	2'- 2"	56	2'-0"	75	3	13"	39'-9"	80	19	39'-9"	505	3'-11"	10	10	28	0.266	38.8	0.3	38	10.9	1,588
3'-0"	3'-0"	7"	7"	30'	162	#4	6"	3'-11"	424	98	#4	10"	5'- 2"	338	3'- 5"	1'- 9"	98	#4	10"	3'-11"	256	1'- 9"	2'- 2"	56	3'-0"	112	3	12"	39'-9"	80	23	39'-9"	611	3'-11"	10	10	28	0.310	45.5	0.3	38	12.7	1,859
4'-0"	2'-0"	7"	7"	30'	194	#4	5"	4'-11"	637	162	#4	6"	4'- 8"	505	2'- 5"	2'- 3"	162	#4	6"	4'- 5"	478	2'- 3"	2'- 2"	56	2'-0"	75	5	10"	39'-9"	133	21	39'-9"	558	4'-11"	13	12	34	0.310	59.7	0.4	47	12.8	2,433
4'-0"	3'-0"	7"	7"	30'	162	#5	6"	4'-11"	831	162	#4	6"	5'- 8"	613	3'- 5"	2'- 3"	162	#4	6"	4'- 5"	478	2'- 3"	2'- 2"	56	3'-0"	112	6	8"	39'-9"	159	25	39'-9"	664	4'-11"	13	12	34	0.353	71.4	0.4	47	14.5	2,904
4'-0"	4'-0"	7"	7"	30'	162	#5	6"	4'-11"	831	162	#4	6"	6'- 8"	721	4'- 5"	2'- 3"	162	#4	6"	4'- 5"	478	2'- 3"	2'- 2"	56	4'-0"	150	6	8"	39'-9"	159	25	39'-9"	664	4'-11"	13	12	34	0.396	75.1	0.4	47	16.2	3,050

"CONSTRUCTION RECORD DRAWINGS_8-01-2009

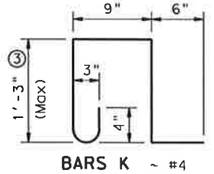

BARS K ~ #4
(Spa = 1'-0" Max)
(Length = 4'-3")

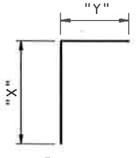

BARS C

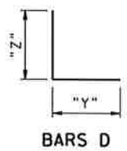

BARS D

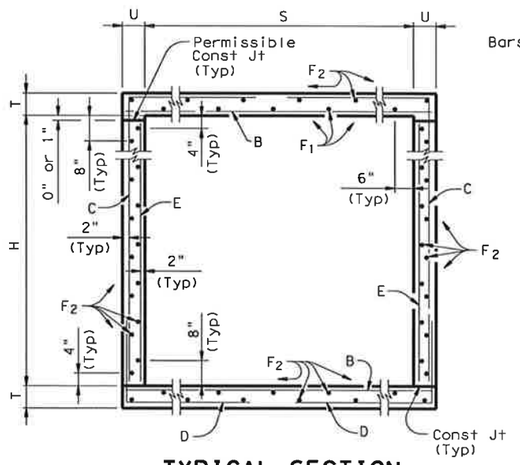

TYPICAL SECTION

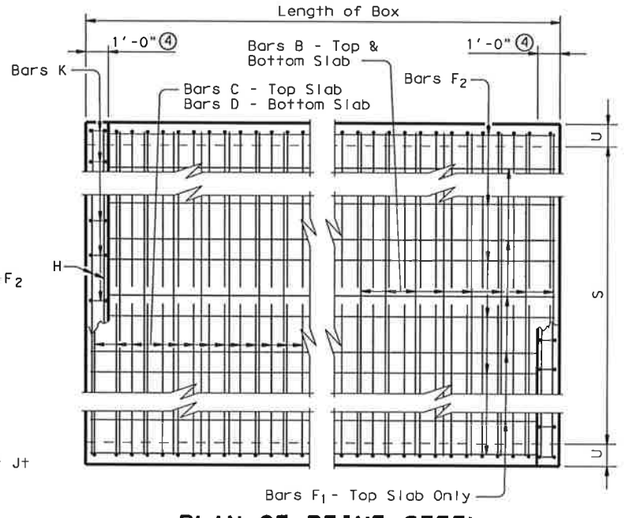

PLAN OF REINF STEEL

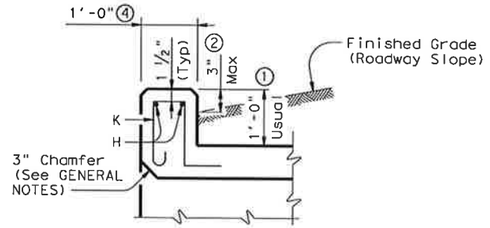

SECTION THRU CURB

① 0" min to 5'-0" max. Estimated curb heights are shown elsewhere in the plans. For structures without railing and curbs taller than 1'-0", refer to ECD standard. For structures with T6 bridge rail, refer to T6-CM standard. For structures with bridge rail, other than T6, refer to RAC standard.

② For vehicle safety, the following requirements must be met:
- For structures without bridge rail, curbs shall project no more than 3" above finished grade.
- For structures with bridge rail, curbs shall be flush with finished grade.

Curb heights shall be reduced, if necessary, to meet the above requirements. No changes will be made in quantities and no additional compensation will be allowed for this work.

③ For curbs less than 1'-0" high, tilt bars K or reduce bar height as necessary to maintain cover. For curbs less than 3" high, bars K may be omitted.

④ 1'-0" typical. 2'-0" when RAC standard is referred to elsewhere in the plans.

GENERAL NOTES:

Designed according to current AASHTO Standard and Interim Specifications.

Designed to the maximum fill heights shown.

All reinforcing steel shall be Grade 60.

All concrete shall be Class "C" with these exceptions: use Class "S" for top slabs of culverts with overlay, with 1-to-2 course surface treatment, or with the top slab as the final riding surface.

Class "C" concrete shall have a minimum compressive strength of 3,600 psi. Class "S" concrete shall have a minimum compressive strength of 4,000 psi.

The use of permanent forms is not allowed.

Reinforcing bars shall be adjusted to provide a minimum of 1 ¼ inches clear cover.

The bottom edge of the top slab shall be chamfered 3 inches at the entrance.

Construction joints shown at the flow line may be raised a maximum of 6 inches at the Contractor's option. If this option is used, Bars E may be cut off or raised, and Bars C and D may be reversed.

See Standard SCC-MD for skewed ends, angle sections and lengthening details.

HS20 LOADING

Texas Department of Transportation
Bridge Division

SINGLE BOX CULVERTS CAST-IN-PLACE 0' TO 30' FILL

SCC-3 & 4

FILE: scc34ste.dgn	DN: GAF	CK: LMW	DW: BWH/TxDOT	CK: GAF
©TxDOT May 2005	DISTRICT	FEDERAL AID PROJECT		SHEET
REVISIONS				233
	COUNTY	CONTROL	SECT	JOB	HIGHWAY

P-200612-01

LEVELS DISPLAYED
ACC:

DISCLAIMER:
The use of this standard is governed by the "Texas Engineering Practice Act". No warranty of any kind is made by TxDOT for any purpose whatsoever. TxDOT assumes no responsibility for the conversion of this standard to other formats or for incorrect results or damages resulting from its use.

ACC:

LEVELS DISPLAYED

BILLS OF REINFORCING STEEL (For Box Length = 40 feet)

SECTION DIMENSIONS				⑤ FILL HEIGHT	Bars B					Bars C							Bars D							Bars E~#4 at 18" Max			Bars F_1 ~#4				Bars F_2~#4 at 18" Max			Bars H 4~#4		Bars K		QUANTITIES: Per foot of Barrel		Curb		Total	
S	H	T	U		No.	Size	Spa	Length	Weight	No.	Size	Spa	Length	Weight	"X"	"Y"	No.	Size	Spa	Length	Weight	"Y"	"Z"	No.	Length	Wt	No.	Spa	Length	Wt	No.	Length	Wt	Length	Wt	No.	Wt	Conc (CY)	Reinf (Lb)	Conc (CY)	Reinf (Lb)	Conc (CY)	Reinf (Lb)
5'-0"	2'-0"	7"	7"	26'	194	#5	5"	5'-11"	1,197	162	#5	6"	5'- 2"	873	2'- 5"	2'- 9"	162	#5	6"	5'- 4"	901	2'- 9"	2'- 7"	56	2'-0"	75	8	7"	39'-9"	212	22	39'-9"	584	5'-11"	16	14	40	0.353	96.1	0.5	56	14.6	3,898
5'-0"	2'-0"	8"	7"	30'	194	#5	5"	5'-11"	1,197	194	#4	5"	5'- 0"	648	2'- 6"	2'- 6"	194	#4	5"	4'- 9"	616	2'- 6"	2'- 3"	56	2'-0"	75	4	18"	39'-9"	106	22	39'-9"	584	5'-11"	16	14	40	0.391	80.7	0.5	56	16.1	3,282
5'-0"	3'-0"	7"	7"	26'	194	#5	5"	5'-11"	1,197	194	#4	5"	5'-11"	767	3'- 5"	2'- 6"	194	#4	5"	4'- 8"	605	2'- 6"	2'- 2"	56	3'-0"	112	8	7"	39'-9"	212	26	39'-9"	690	5'-11"	16	14	40	0.396	89.6	0.5	56	16.3	3,639
5'-0"	3'-0"	8"	7"	30'	194	#5	5"	5'-11"	1,197	194	#4	5"	6'- 0"	778	3'- 6"	2'- 6"	194	#4	5"	4'- 9"	616	2'- 6"	2'- 3"	56	3'-0"	112	4	18"	39'-9"	106	26	39'-9"	690	5'-11"	16	14	40	0.434	87.5	0.5	56	17.9	3,555
5'-0"	4'-0"	7"	7"	26'	194	#5	5"	5'-11"	1,197	194	#4	5"	6'-11"	896	4'- 5"	2'- 6"	194	#4	5"	4'- 8"	605	2'- 6"	2'- 2"	56	4'-0"	150	8	7"	39'-9"	212	26	39'-9"	690	5'-11"	16	14	40	0.439	93.8	0.5	56	18.1	3,806
5'-0"	4'-0"	8"	7"	30'	194	#5	5"	5'-11"	1,197	194	#4	5"	7'- 0"	907	4'- 6"	2'- 6"	194	#4	5"	4'- 9"	616	2'- 6"	2'- 3"	56	4'-0"	150	4	18"	39'-9"	106	26	39'-9"	690	5'-11"	16	14	40	0.477	91.7	0.5	56	19.6	3,722
5'-0"	5'-0"	7"	7"	26'	194	#5	5"	5'-11"	1,197	194	#4	5"	7'-11"	1,026	5'- 5"	2'- 6"	194	#4	5"	4'- 8"	605	2'- 6"	2'- 2"	56	5'-0"	187	8	7"	39'-9"	212	30	39'-9"	797	5'-11"	16	14	40	0.483	100.6	0.5	56	19.8	4,080
5'-0"	5'-0"	8"	7"	30'	194	#5	5"	5'-11"	1,197	194	#4	5"	8'- 0"	1,037	5'- 6"	2'- 6"	194	#4	5"	4'- 9"	616	2'- 6"	2'- 3"	56	5'-0"	187	4	18"	39'-9"	106	30	39'-9"	797	5'-11"	16	14	40	0.521	98.5	0.5	56	21.3	3,996
6'-0"	3'-0"	7"	7"	20'	194	#5	5"	6'-11"	1,400	162	#5	6"	6'- 6"	1,098	3'- 5"	3'- 1"	162	#5	6"	5'- 8"	957	3'- 1"	2'- 7"	56	3'-0"	112	10	7"	39'-9"	266	29	39'-9"	770	6'-11"	18	16	45	0.439	115.1	0.5	63	18.1	4,666
6'-0"	3'-0"	8"	7"	26'	162	#6	6"	6'-11"	1,683	162	#5	6"	6'- 7"	1,112	3'- 6"	3'- 1"	162	#5	6"	5'- 9"	972	3'- 1"	2'- 8"	56	3'-0"	112	5	18"	39'-9"	133	29	39'-9"	770	6'-11"	18	16	45	0.484	119.6	0.5	63	19.9	4,845
6'-0"	3'-0"	9"	8"	30'	162	#6	6"	7'- 1"	1,724	162	#5	6"	6'- 8"	1,126	3'- 7"	3'- 1"	162	#5	6"	5'-10"	986	3'- 1"	2'- 9"	56	3'-0"	112	5	18"	39'-9"	133	29	39'-9"	770	7'- 1"	19	18	51	0.556	121.3	0.5	70	22.7	4,921
6'-0"	4'-0"	7"	7"	20'	194	#5	5"	6'-11"	1,400	194	#4	5"	7'- 3"	940	4'- 5"	2'-10"	194	#4	5"	5'- 0"	648	2'-10"	2'- 2"	56	4'-0"	150	10	7"	39'-9"	266	29	39'-9"	770	6'-11"	18	16	45	0.483	104.4	0.5	63	19.8	4,237
6'-0"	4'-0"	8"	7"	26'	194	#6	5"	6'-11"	2,015	162	#5	6"	7'- 7"	1,281	4'- 6"	3'- 1"	162	#5	6"	5'- 9"	972	3'- 1"	2'- 8"	56	4'-0"	150	5	18"	39'-9"	133	29	39'-9"	770	6'-11"	18	16	45	0.527	133.0	0.5	63	21.6	5,384
6'-0"	4'-0"	9"	8"	30'	162	#6	6"	7'- 1"	1,724	162	#5	6"	7'- 8"	1,295	4'- 7"	3'- 1"	162	#5	6"	5'-10"	986	3'- 1"	2'- 9"	56	4'-0"	150	5	18"	39'-9"	133	29	39'-9"	770	7'- 1"	19	18	51	0.605	126.5	0.5	70	24.7	5,128
6'-0"	5'-0"	7"	7"	20'	194	#5	5"	6'-11"	1,400	194	#4	5"	8'- 3"	1,069	5'- 5"	2'-10"	194	#4	5"	5'- 0"	648	2'-10"	2'- 2"	56	5'-0"	187	10	7"	39'-9"	266	33	39'-9"	876	6'-11"	18	16	45	0.526	111.2	0.5	63	21.5	4,509
6'-0"	5'-0"	8"	7"	26'	194	#6	5"	6'-11"	2,015	162	#5	6"	8'- 7"	1,450	5'- 6"	3'- 1"	162	#5	6"	5'- 9"	972	3'- 1"	2'- 8"	56	5'-0"	187	5	18"	39'-9"	133	33	39'-9"	876	6'-11"	18	16	45	0.570	140.8	0.5	63	23.3	5,696
6'-0"	5'-0"	9"	8"	30'	194	#6	5"	7'- 1"	2,064	162	#5	6"	8'- 8"	1,464	5'- 7"	3'- 1"	162	#5	6"	5'-10"	986	3'- 1"	2'- 9"	56	5'-0"	187	5	18"	39'-9"	133	33	39'-9"	876	7'- 1"	19	18	51	0.654	142.8	0.5	70	26.7	5,780
6'-0"	6'-0"	7"	7"	20'	194	#5	5"	6'-11"	1,400	194	#4	5"	9'- 3"	1,199	6'- 5"	2'-10"	194	#4	5"	5'- 0"	648	2'-10"	2'- 2"	56	6'-0"	224	10	7"	39'-9"	266	37	39'-9"	982	6'-11"	18	16	45	0.569	118.0	0.5	63	23.3	4,782
6'-0"	6'-0"	8"	7"	26'	194	#6	5"	6'-11"	2,015	162	#5	6"	9'- 7"	1,619	6'- 6"	3'- 1"	162	#5	6"	5'- 9"	972	3'- 1"	2'- 8"	56	6'-0"	224	5	18"	39'-9"	133	37	39'-9"	982	6'-11"	18	16	45	0.613	148.6	0.5	63	25.0	6,008
6'-0"	6'-0"	9"	8"	30'	194	#6	5"	7'- 1"	2,064	162	#5	6"	9'- 8"	1,633	6'- 7"	3'- 1"	162	#5	6"	5'-10"	986	3'- 1"	2'- 9"	56	6'-0"	224	5	18"	39'-9"	133	37	39'-9"	982	7'- 1"	19	18	51	0.704	150.6	0.5	70	28.7	6,092

"CONSTRUCTION RECORD DRAWINGS_8-01-2009

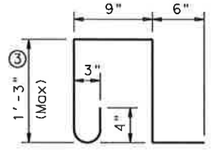

BARS K ~ #4
(Spa = 1'-0" Max)
(Length = 4'-3")

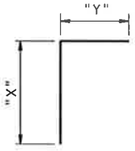

BARS C

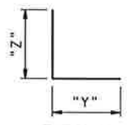

BARS D

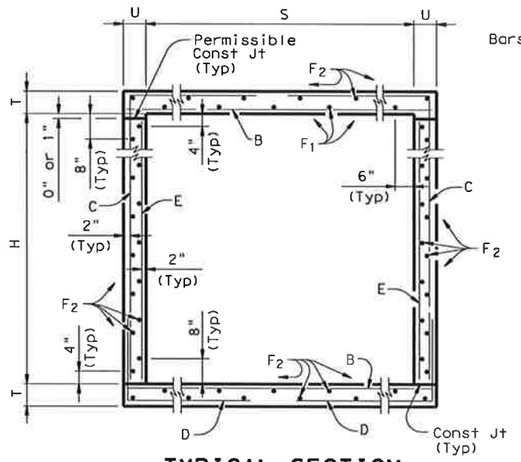

TYPICAL SECTION

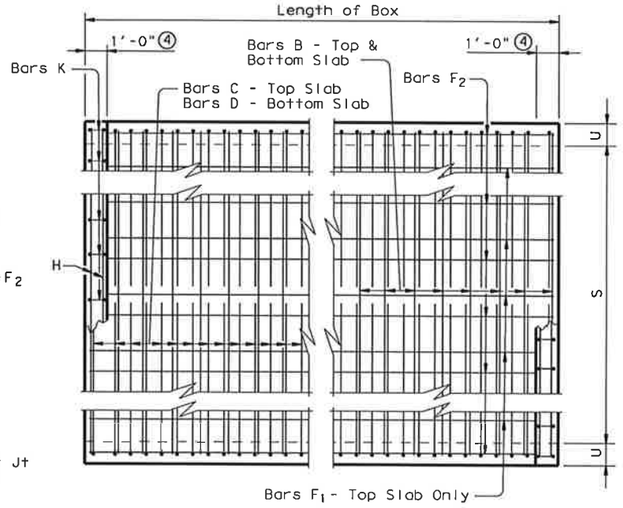

PLAN OF REINF STEEL

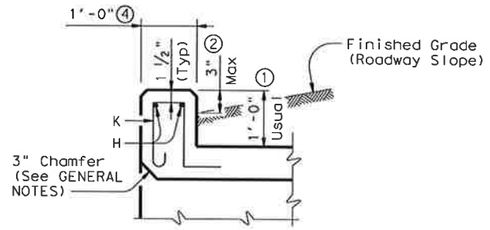

SECTION THRU CURB

① 0" min to 5'-0" max. Estimated curb heights are shown elsewhere in the plans. For structures without railing and curbs taller than 1'-0", refer to ECD standard. For structures with T6 bridge rail, refer to T6-CM standard. For structures with bridge rail, other than T6, refer to RAC standard.

② For vehicle safety, the following requirements must be met:
- For structures without bridge rail, curbs shall project no more than 3" above finished grade.
- For structures with bridge rail, curbs shall be flush with finished grade.

Curb heights shall be reduced, if necessary, to meet the above requirements. No changes will be made in quantities and no additional compensation will be allowed for this work.

③ For curbs less than 1'-0" high, tilt bars K or reduce bar height as necessary to maintain cover. For curbs less than 3" high, bars K may be omitted.

④ 1'-0" typical. 2'-0" when RAC standard is referred to elsewhere in the plans.

⑤ For each box size, minimum fill height shown shall be used for all culverts with less than 2'-0" of fill.

GENERAL NOTES:

Designed according to current AASHTO Standard and Interim Specifications.

Designed to the maximum fill heights shown.

All reinforcing steel shall be Grade 60.

All concrete shall be Class "C" with these exceptions: use Class "S" for top slabs of culverts with overlay, with 1-to-2 course surface treatment, or with the top slab as the final riding surface.

Class "C" concrete shall have a minimum compressive strength of 3,600 psi. Class "S" concrete shall have a minimum compressive strength of 4,000 psi.

The use of permanent forms is not allowed.

Reinforcing bars shall be adjusted to provide a minimum of 1 ¼ inches clear cover.

The bottom edge of the top slab shall be chamfered 3 inches at the entrance.

Construction joints shown at the flow line may be raised a maximum of 6 inches at the Contractor's option. If this option is used, Bars E may be cut off or raised, and Bars C and D may be reversed.

See Standard SCC-MD for skewed ends, angle sections and lengthening details.

HS20 LOADING

Texas Department of Transportation
Bridge Division

SINGLE BOX CULVERTS CAST-IN-PLACE 0' TO 30' FILL

SCC-5 & 6

FILE: scc56ste.dgn	DN: GAF	CK: LMW	DW: BWH/TxDOT	CK: GAF
©TxDOT May 2005	DISTRICT	FEDERAL AID PROJECT		SHEET
REVISIONS				234
	COUNTY	CONTROL	SECT	JOB	HIGHWAY
				P-200612-01

DISCLAIMER:
The use of this standard is governed by the "Texas Engineering Practice Act". No warranty of any kind is made by TxDOT for any purpose whatsoever. TxDOT assumes no responsibility for the conversion of this standard to other formats or for incorrect results or damages resulting from its use.

LEVELS DISPLAYED

ACC:

BOX DATA

SECTION DIMENSIONS					Fill Height	M (Min)	REINFORCING (in²/ft) ②								Lift Weight (Tons) ①
S (ft)	H (ft)	T_T (in)	T_B (in)	T_S (in)	(ft)	(in)	A_{S1}	A_{S2}	A_{S3}	A_{S4}	A_{S5}	A_{S6}	A_{S7}	A_{S8}	
5	3	8	7	6	<2	-	0.19	0.44	0.22	0.14	0.21	0.19	0.19	0.17	6.6
5	3	6	6	6	2<3	45	0.21	0.29	0.22	0.14	-	-	-	-	5.7
5	3	6	6	6	3-5	36	0.14	0.14	0.14	0.14	-	-	-	-	5.7
5	3	6	6	6	10	36	0.14	0.17	0.17	0.14	-	-	-	-	5.7
5	3	6	6	6	15	35	0.17	0.24	0.24	0.14	-	-	-	-	5.7
5	3	6	6	6	20	35	0.21	0.31	0.31	0.14	-	-	-	-	5.7
5	3	6	6	6	25	35	0.26	0.38	0.38	0.14	-	-	-	-	5.7
5	3	6	6	6	30	35	0.31	0.45	0.45	0.14	-	-	-	-	5.7
5	3	6	6	6	35	35	0.37	0.52	0.53	0.14	-	-	-	-	5.7
5	4	8	7	6	<2	-	0.19	0.48	0.24	0.14	0.22	0.19	0.19	0.17	7.2
5	4	6	6	6	2<3	45	0.18	0.33	0.25	0.14	-	-	-	-	6.3
5	4	6	6	6	3-5	45	0.14	0.16	0.16	0.14	-	-	-	-	6.3
5	4	6	6	6	10	36	0.14	0.19	0.19	0.14	-	-	-	-	6.3
5	4	6	6	6	15	35	0.14	0.26	0.27	0.14	-	-	-	-	6.3
5	4	6	6	6	20	35	0.18	0.33	0.34	0.14	-	-	-	-	6.3
5	4	6	6	6	25	35	0.21	0.41	0.42	0.14	-	-	-	-	6.3
5	4	6	6	6	30	35	0.26	0.49	0.49	0.14	-	-	-	-	6.3
5	4	6	6	6	35	35	0.30	0.56	0.57	0.14	-	-	-	-	6.3
5	5	8	7	6	<2	-	0.19	0.50	0.26	0.14	0.24	0.19	0.19	0.17	7.8
5	5	6	6	6	2<3	45	0.16	0.35	0.28	0.14	-	-	-	-	6.9
5	5	6	6	6	3-5	45	0.14	0.17	0.18	0.14	-	-	-	-	6.9
5	5	6	6	6	10	45	0.14	0.20	0.21	0.14	-	-	-	-	6.9
5	5	6	6	6	15	36	0.14	0.27	0.28	0.14	-	-	-	-	6.9
5	5	6	6	6	20	35	0.15	0.35	0.36	0.14	-	-	-	-	6.9
5	5	6	6	6	25	35	0.19	0.42	0.44	0.14	-	-	-	-	6.9
5	5	6	6	6	30	35	0.22	0.50	0.51	0.14	-	-	-	-	6.9
5	5	6	6	6	35	35	0.26	0.58	0.59	0.14	-	-	-	-	6.9
5	2	8	7	6	<2	-	0.20	0.31	0.20	0.14	0.22	0.19	0.19	0.17	6.0 ⑤
5	2	6	6	6	30	44	0.39	0.33	0.34	0.14	-	-	-	-	5.1 ⑤

① For Box Length = 8'-0"

② A_{S1} thru A_{S4}, A_{S7} and A_{S8} are minimum required areas of reinforcement per linear foot of box length. A_{S6} and A_{S5} are minimum required areas of reinforcement per linear foot of box width.

⑤ These designs were created by TxDOT and are not shown in the ASTM Specifications.

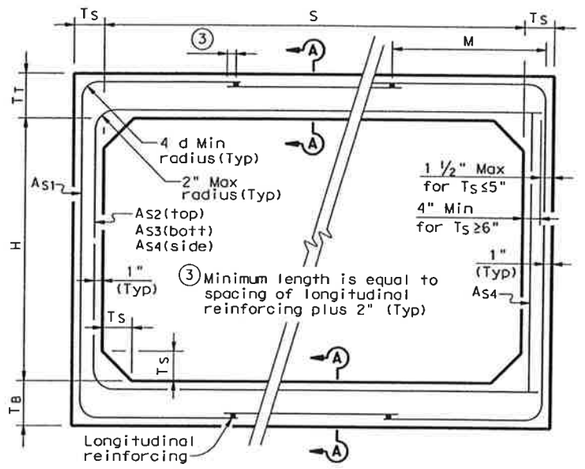

CORNER OPTION "A" CORNER OPTION "B"

FILL HEIGHT 2 FT AND GREATER

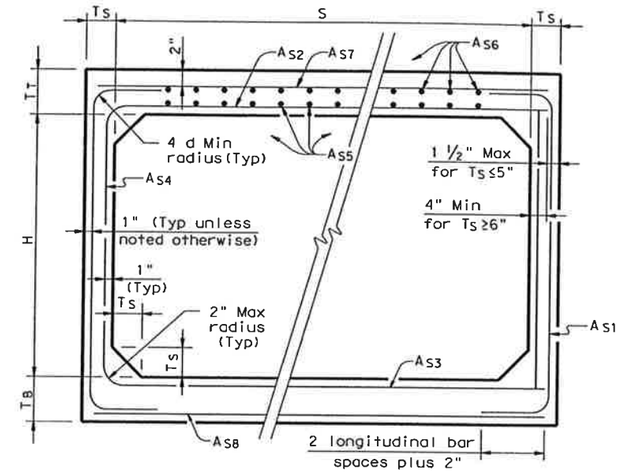

CORNER OPTION "A" CORNER OPTION "B"

FILL HEIGHT LESS THAN 2 FT

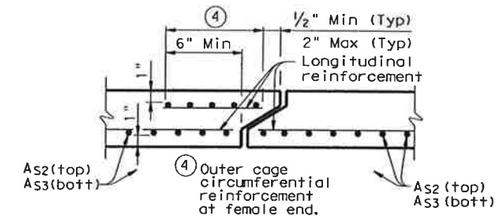

SECTION A-A

(TOP AND BOTTOM SLAB JOINT REINFORCEMENT)

GENERAL NOTES:

Designs shown conform to ASTM C1433. Refer to ASTM C1433 for information or details not shown.

Use welded wire reinforcement conforming to ASTM A497 with a minimum specified yield stress of 65 ksi.

All concrete shall be Class "H" Concrete with a minimum compressive strength of 5,000 psi.

See SCP-MD standard sheet for miscellaneous details and notes not shown.

In lieu of furnishing the designs shown on this sheet, the contractor may furnish an alternate design that is equal to or exceeds the box design for the design fill height in the table. Shop plans for alternate designs shall be submitted in accordance with Item "Precast Concrete Structures".

"CONSTRUCTION RECORD DRAWINGS_8-01-2009

HS20 LOADING

Texas Department of Transportation
Bridge Division

SINGLE BOX CULVERTS PRECAST
5'-0" SPAN

SCP-5

FILE: scp05ste.dgn	DN: GAF	CK: LMW	DW: BWH/TxDOT	CK: GAF
©TxDOT May 2005	DISTRICT	FEDERAL AID PROJECT		SHEET
REVISIONS				25A
06-06 - Revised reinforcing.	COUNTY		CONTROL SECT JOB	HIGHWAY

P-200612-01

DISCLAIMER:
The use of this standard is governed by the "Texas Engineering Practice Act". No warranty of any kind is made by TxDOT for any purpose whatsoever. TxDOT assumes no responsibility for the conversion of this standard to other formats or for incorrect results or damages resulting from its use.

LEVELS DISPLAYED ACC:

BOX DATA

SECTION DIMENSIONS					Fill Height	M (Min)	REINFORCING (in²/ft) ②								① Lift Weight (Tons)
S (ft)	H (ft)	T_T (in)	T_B (in)	T_S (in)	(ft)	(in)	A_{S1}	A_{S2}	A_{S3}	A_{S4}	A_{S5}	A_{S6}	A_{S7}	A_{S8}	
6	3	8	7	7	<2	-	0.23	0.45	0.20	0.17	0.19	0.19	0.19	0.17	7.9
6	3	7	7	7	2<3	43	0.24	0.30	0.20	0.17	-	-	-	-	7.5
6	3	7	7	7	3-5	40	0.17	0.17	0.17	0.17	-	-	-	-	7.5
6	3	7	7	7	10	39	0.17	0.20	0.20	0.17	-	-	-	-	7.5
6	3	7	7	7	15	38	0.23	0.27	0.28	0.17	-	-	-	-	7.5
6	3	7	7	7	20	38	0.30	0.35	0.36	0.17	-	-	-	-	7.5
6	3	7	7	7	25	38	0.36	0.44	0.44	0.17	-	-	-	-	7.5
6	3	7	7	7	30	38	0.43	0.52	0.52	0.17	-	-	-	-	7.5
6	3	7	7	7	35	38	0.50	0.60	0.60	0.17	-	-	-	-	7.5
6	4	8	7	7	<2	-	0.19	0.49	0.23	0.17	0.21	0.19	0.19	0.17	8.6
6	4	7	7	7	2<3	43	0.21	0.33	0.23	0.17	-	-	-	-	8.2
6	4	7	7	7	3-5	40	0.17	0.17	0.17	0.17	-	-	-	-	8.2
6	4	7	7	7	10	39	0.17	0.22	0.23	0.17	-	-	-	-	8.2
6	4	7	7	7	15	38	0.20	0.30	0.31	0.17	-	-	-	-	8.2
6	4	7	7	7	20	38	0.25	0.39	0.40	0.17	-	-	-	-	8.2
6	4	7	7	7	25	38	0.30	0.48	0.49	0.17	-	-	-	-	8.2
6	4	7	7	7	30	38	0.36	0.57	0.58	0.17	-	-	-	-	8.2
6	4	7	7	7	35	38	0.42	0.66	0.67	0.17	-	-	-	-	8.2
6	5	8	7	7	<2	-	0.19	0.52	0.25	0.17	0.22	0.19	0.19	0.17	9.3
6	5	7	7	7	2<3	52	0.19	0.36	0.26	0.17	-	-	-	-	8.9
6	5	7	7	7	3-5	43	0.17	0.19	0.19	0.17	-	-	-	-	8.9
6	5	7	7	7	10	39	0.17	0.23	0.24	0.17	-	-	-	-	8.9
6	5	7	7	7	15	38	0.17	0.32	0.33	0.17	-	-	-	-	8.9
6	5	7	7	7	20	38	0.22	0.41	0.43	0.17	-	-	-	-	8.9
6	5	7	7	7	25	38	0.26	0.51	0.52	0.17	-	-	-	-	8.9
6	5	7	7	7	30	38	0.31	0.60	0.61	0.17	-	-	-	-	8.9
6	5	7	7	7	35	38	0.36	0.69	0.71	0.17	-	-	-	-	8.9
6	6	8	7	7	<2	-	0.19	0.54	0.27	0.17	0.23	0.19	0.19	0.17	10.0
6	6	7	7	7	2<3	52	0.17	0.38	0.28	0.17	-	-	-	-	9.6
6	6	7	7	7	3-5	52	0.17	0.20	0.20	0.17	-	-	-	-	9.6
6	6	7	7	7	10	43	0.17	0.24	0.26	0.17	-	-	-	-	9.6
6	6	7	7	7	15	39	0.17	0.33	0.35	0.17	-	-	-	-	9.6
6	6	7	7	7	20	38	0.19	0.43	0.44	0.17	-	-	-	-	9.6
6	6	7	7	7	25	38	0.23	0.52	0.54	0.17	-	-	-	-	9.6
6	6	7	7	7	30	38	0.27	0.61	0.63	0.17	-	-	-	-	9.6
6	6	7	7	7	35	38	0.32	0.71	0.73	0.17	-	-	-	-	9.6

① For Box Length = 8'-0"

② A_{S1} thru A_{S4}, A_{S7} and A_{S8} are minimum required areas of reinforcement per linear foot of box length. A_{S6} and A_{S5} are minimum required areas of reinforcement per linear foot of box width.

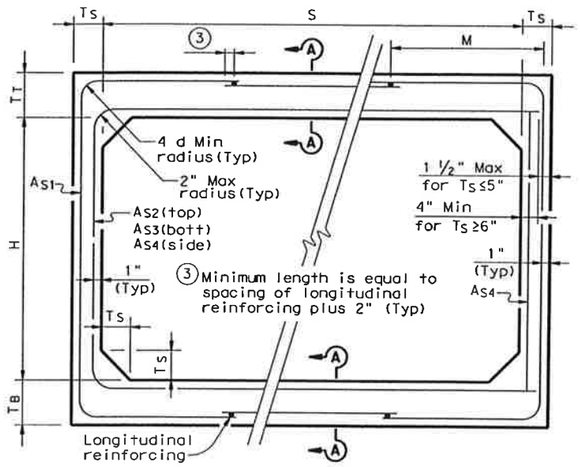

CORNER OPTION "A" CORNER OPTION "B"

FILL HEIGHT 2 FT AND GREATER

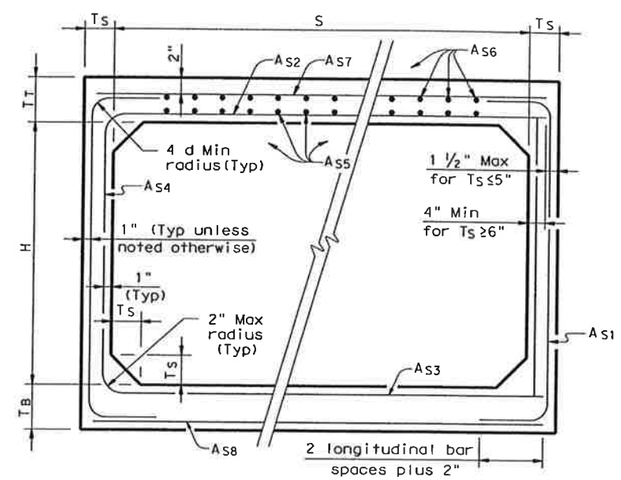

CORNER OPTION "A" CORNER OPTION "B"

FILL HEIGHT LESS THAN 2 FT

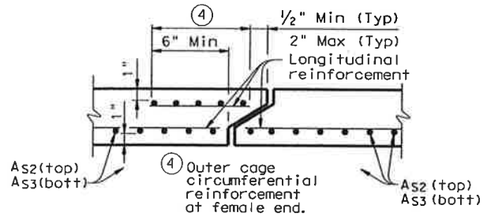

SECTION A-A

(TOP AND BOTTOM SLAB JOINT REINFORCEMENT)

GENERAL NOTES:

Designs shown conform to ASTM C1433. Refer to ASTM C1433 for information or details not shown.

Use welded wire reinforcement conforming to ASTM A497 with a minimum specified yield stress of 65 ksi.

All concrete shall be Class "H" Concrete with a minimum compressive strength of 5,000 psi.

See SCP-MD standard sheet for miscellaneous details and notes not shown.

In lieu of furnishing the designs shown on this sheet, the contractor may furnish an alternate design that is equal to or exceeds the box design for the design fill height in the table. Shop plans for alternate designs shall be submitted in accordance with Item "Precast Concrete Structures".

"CONSTRUCTION RECORD DRAWINGS_8-01-2009

HS20 LOADING

Texas Department of Transportation
Bridge Division

SINGLE BOX CULVERTS PRECAST
6'-0" SPAN

SCP-6

FILE: scp06ste.dgn	DN: GAF	CK: LMW	DW: BWH/TxDOT	CK: GAF
©TxDOT May 2005	DISTRICT	FEDERAL AID PROJECT		SHEET
REVISIONS				2348
06-06 - Revised reinforcing.	COUNTY	CONTROL	SECT	JOB	HIGHWAY

P-200612-01

DISCLAIMER:
The use of this standard is governed by the "Texas Engineering Practice Act". No warranty of any kind is made by TxDOT for any purpose whatsoever. TxDOT assumes no responsibility for the conversion of this standard to other formats or for incorrect results or damages resulting from its use.

SECTION DIMENSIONS				⑤ FILL HEIGHT	BILLS OF REINFORCING STEEL (For Box Length = 40 feet)																												QUANTITIES					
					Bars B					Bars C							Bars D							Bars E~#4 at 18" Max			Bars F_1~#4				Bars F_2~#4 at 18" Max			Bars H 4~#4		Bars K		Per foot of Barrel		Curb		Total	
S	H	T	U		No.	Size	Spa	Length	Weight	No.	Size	Spa	Length	Weight	"X"	"Y"	No.	Size	Spa	Length	Weight	"Y"	"Z"	No.	Length	Wt	No.	Spa	Length	Wt	No.	Length	Wt	Length	Wt	No.	Wt	Conc (CY)	Reinf (Lb)	Conc (CY)	Reinf (Lb)	Conc (CY)	Reinf (Lb)
7'-0"	3'-0"	7"	7"	16'	162	#6	6"	7'-11"	1,926	194	#5	5"	6'-11"	1,400	3'- 5"	3'- 6"	194	#5	5"	6'- 1"	1,231	3'- 6"	2'- 7"	56	3'-0"	112	12	7"	39'-9"	319	31	39'-9"	823	7'-11"	21	18	51	0.483	145.3	0.6	72	19.9	5,883
7'-0"	3'-0"	8"	7"	20'	162	#6	6"	7'-11"	1,926	194	#5	5"	7'- 0"	1,416	3'- 6"	3'- 6"	194	#5	5"	6'- 2"	1,248	3'- 6"	2'- 8"	56	3'-0"	112	5	18"	39'-9"	133	31	39'-9"	823	7'-11"	21	18	51	0.533	141.5	0.6	72	21.9	5,730
7'-0"	3'-0"	9"	8"	23'	162	#6	6"	8'- 1"	1,967	194	#5	5"	7'- 1"	1,433	3'- 7"	3'- 6"	194	#5	5"	6'- 3"	1,265	3'- 6"	2'- 9"	56	3'-0"	112	5	18"	39'-9"	133	31	39'-9"	823	8'- 1"	22	20	57	0.611	143.3	0.6	79	25.0	5,812
7'-0"	3'-0"	10"	8"	30'	194	#6	5"	8'- 1"	2,355	194	#5	5"	7'- 2"	1,450	3'- 8"	3'- 6"	194	#5	5"	6'- 4"	1,281	3'- 6"	2'-10"	56	3'-0"	112	5	18"	39'-9"	133	31	39'-9"	823	8'- 1"	22	20	57	0.663	153.9	0.6	79	27.1	6,233
7'-0"	4'-0"	7"	7"	16'	162	#6	6"	7'-11"	1,926	162	#5	6"	7'-11"	1,338	4'- 5"	3'- 6"	162	#5	6"	6'- 1"	1,028	3'- 6"	2'- 7"	56	4'-0"	150	12	7"	39'-9"	319	31	39'-9"	823	7'-11"	21	18	51	0.526	139.6	0.6	72	21.6	5,656
7'-0"	4'-0"	8"	7"	20'	194	#6	5"	7'-11"	2,307	162	#5	6"	8'- 0"	1,352	4'- 6"	3'- 6"	162	#5	6"	6'- 2"	1,042	3'- 6"	2'- 8"	56	4'-0"	150	5	18"	39'-9"	133	31	39'-9"	823	7'-11"	21	18	51	0.576	145.2	0.6	72	23.6	5,879
7'-0"	4'-0"	9"	8"	23'	194	#6	5"	8'- 1"	2,355	162	#5	6"	8'- 1"	1,366	4'- 7"	3'- 6"	162	#5	6"	6'- 3"	1,056	3'- 6"	2'- 9"	56	4'-0"	150	5	18"	39'-9"	133	31	39'-9"	823	8'- 1"	22	20	57	0.660	147.1	0.6	79	27.0	5,962
7'-0"	4'-0"	10"	8"	30'	194	#6	5"	8'- 1"	2,355	194	#5	5"	8'- 2"	1,652	4'- 8"	3'- 6"	194	#5	5"	6'- 4"	1,281	3'- 6"	2'-10"	56	4'-0"	150	5	18"	39'-9"	133	31	39'-9"	823	8'- 1"	22	20	57	0.712	159.9	0.6	79	29.1	6,473
7'-0"	5'-0"	7"	7"	16'	162	#6	6"	7'-11"	1,926	162	#5	6"	8'-11"	1,507	5'- 5"	3'- 6"	162	#5	6"	6'- 1"	1,028	3'- 6"	2'- 7"	56	5'-0"	187	12	7"	39'-9"	319	35	39'-9"	929	7'-11"	21	18	51	0.569	147.4	0.6	72	23.4	5,968
7'-0"	5'-0"	8"	7"	20'	194	#6	5"	7'-11"	2,307	162	#5	6"	9'- 0"	1,521	5'- 6"	3'- 6"	162	#5	6"	6'- 2"	1,042	3'- 6"	2'- 8"	56	5'-0"	187	5	18"	39'-9"	133	35	39'-9"	929	7'-11"	21	18	51	0.619	153.0	0.6	72	25.4	6,191
7'-0"	5'-0"	9"	8"	23'	194	#6	5"	8'- 1"	2,355	162	#5	6"	9'- 1"	1,535	5'- 7"	3'- 6"	162	#5	6"	6'- 3"	1,056	3'- 6"	2'- 9"	56	5'-0"	187	5	18"	39'-9"	133	35	39'-9"	929	8'- 1"	22	20	57	0.710	154.9	0.6	79	29.0	6,274
7'-0"	5'-0"	10"	8"	30'	194	#6	5"	8'- 1"	2,355	194	#5	5"	9'- 2"	1,855	5'- 8"	3'- 6"	194	#5	5"	6'- 4"	1,281	3'- 6"	2'-10"	56	5'-0"	187	5	18"	39'-9"	133	35	39'-9"	929	8'- 1"	22	20	57	0.761	168.5	0.6	79	31.0	6,819
7'-0"	6'-0"	7"	7"	16'	194	#6	5"	7'-11"	2,307	162	#5	6"	9'-11"	1,676	6'- 5"	3'- 6"	162	#5	6"	6'- 1"	1,028	3'- 6"	2'- 7"	56	6'-0"	224	12	7"	39'-9"	319	39	39'-9"	1,036	7'-11"	21	18	51	0.612	164.8	0.6	72	25.1	6,662
7'-0"	6'-0"	8"	7"	20'	194	#6	5"	7'-11"	2,307	162	#5	6"	10'- 0"	1,690	6'- 6"	3'- 6"	162	#5	6"	6'- 2"	1,042	3'- 6"	2'- 8"	56	6'-0"	224	5	18"	39'-9"	133	39	39'-9"	1,036	7'-11"	21	18	51	0.663	160.8	0.6	72	27.1	6,504
7'-0"	6'-0"	9"	8"	23'	194	#6	5"	8'- 1"	2,355	162	#5	6"	10'- 1"	1,704	6'- 7"	3'- 6"	162	#5	6"	6'- 3"	1,056	3'- 6"	2'- 9"	56	6'-0"	224	5	18"	39'-9"	133	39	39'-9"	1,036	8'- 1"	22	20	57	0.759	162.7	0.6	79	31.0	6,587
7'-0"	6'-0"	10"	8"	30'	194	#6	5"	8'- 1"	2,355	194	#5	5"	10'- 2"	2,057	6'- 8"	3'- 6"	194	#5	5"	6'- 4"	1,281	3'- 6"	2'-10"	56	6'-0"	224	5	18"	39'-9"	133	39	39'-9"	1,036	8'- 1"	22	20	57	0.811	177.2	0.6	79	33.0	7,165
7'-0"	7'-0"	7"	7"	16'	194	#6	5"	7'-11"	2,307	162	#5	6"	10'-11"	1,845	7'- 5"	3'- 6"	162	#5	6"	6'- 1"	1,028	3'- 6"	2'- 7"	56	7'-0"	262	12	7"	39'-9"	319	39	39'-9"	1,036	7'-11"	21	18	51	0.655	169.9	0.6	72	26.8	6,869
7'-0"	7'-0"	8"	7"	20'	194	#6	5"	7'-11"	2,307	194	#5	5"	11'- 0"	2,226	7'- 6"	3'- 6"	194	#5	5"	6'- 2"	1,248	3'- 6"	2'- 8"	56	7'-0"	262	5	18"	39'-9"	133	39	39'-9"	1,036	7'-11"	21	18	51	0.706	180.3	0.6	72	28.8	7,284
7'-0"	7'-0"	9"	8"	23'	194	#6	5"	8'- 1"	2,355	162	#5	6"	11'- 1"	1,873	7'- 7"	3'- 6"	162	#5	6"	6'- 3"	1,056	3'- 6"	2'- 9"	56	7'-0"	262	5	18"	39'-9"	133	39	39'-9"	1,036	8'- 1"	22	20	57	0.809	167.9	0.6	79	33.0	6,794
7'-0"	7'-0"	10"	8"	30'	194	#6	5"	8'- 1"	2,355	194	#5	5"	11'- 2"	2,259	7'- 8"	3'- 6"	194	#5	5"	6'- 4"	1,281	3'- 6"	2'-10"	56	7'-0"	262	5	18"	39'-9"	133	39	39'-9"	1,036	8'- 1"	22	20	57	0.860	183.2	0.6	79	35.0	7,405

"CONSTRUCTION RECORD DRAWINGS_8-01-2009

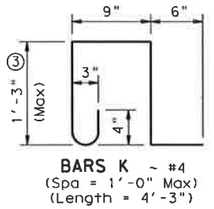

BARS K ~ #4
(Spa = 1'-0" Max)
(Length = 4'-3")

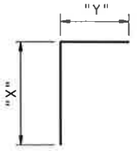

BARS C

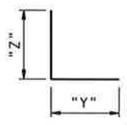

BARS D

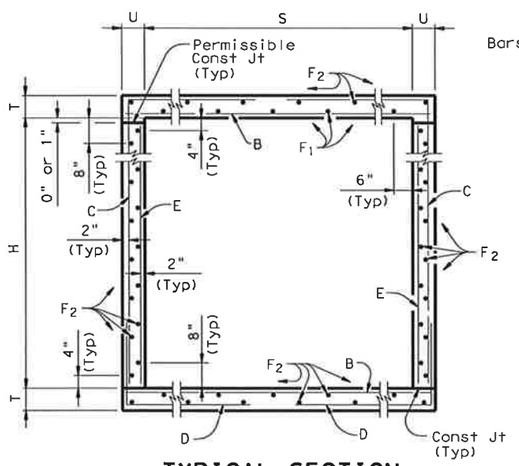

TYPICAL SECTION

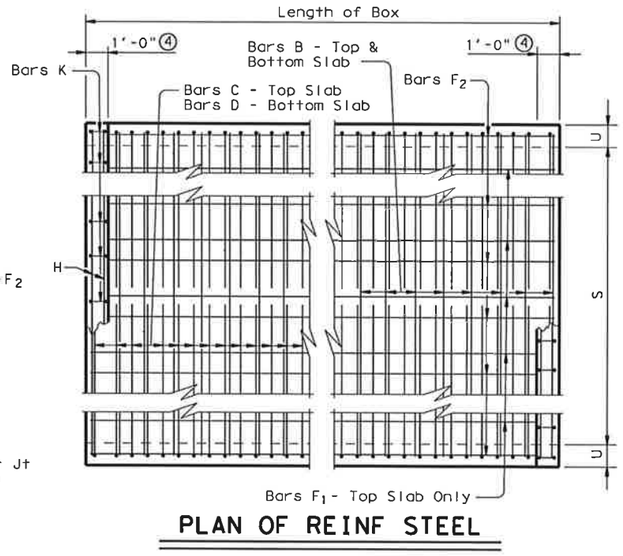

PLAN OF REINF STEEL

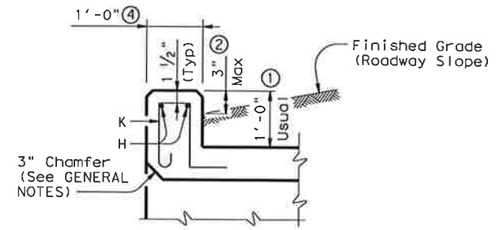

SECTION THRU CURB

① 0" min to 5'-0" max. Estimated curb heights are shown elsewhere in the plans. For structures without railing and curbs taller than 1'-0", refer to ECD standard. For structures with T6 bridge rail, refer to T6-CM standard. For structures with bridge rail, other than T6, refer to RAC standard.

② For vehicle safety, the following requirements must be met:
- For structures without bridge rail, curbs shall project no more than 3" above finished grade.
- For structures with bridge rail, curbs shall be flush with finished grade.

Curb heights shall be reduced, if necessary, to meet the above requirements. No changes will be made in quantities and no additional compensation will be allowed for this work.

③ For curbs less than 1'-0" high, tilt bars K or reduce bar height as necessary to maintain cover. For curbs less than 3" high, bars K may be omitted.

④ 1'-0" typical. 2'-0" when RAC standard is referred to elsewhere in the plans.

⑤ For each box size, minimum fill height shown shall be used for all culverts with less than 2'-0" of fill.

GENERAL NOTES:

Designed according to current AASHTO Standard and Interim Specifications.

Designed to the maximum fill heights shown.

All reinforcing steel shall be Grade 60.

All concrete shall be Class "C" with these exceptions: use Class "S" for top slabs of culverts with overlay, with 1-to-2 course surface treatment, or with the top slab as the final riding surface.

Class "C" concrete shall have a minimum compressive strength of 3,600 psi. Class "S" concrete shall have a minimum compressive strength of 4,000 psi.

The use of permanent forms is not allowed.

Reinforcing bars shall be adjusted to provide a minimum of 1 ¼ inches clear cover.

The bottom edge of the top slab shall be chamfered 3 inches at the entrance.

Construction joints shown at the flow line may be raised a maximum of 6 inches at the Contractor's option. If this option is used, Bars E may be cut off or raised, and Bars C and D may be reversed.

See Standard SCC-MD for skewed ends, angle sections and lengthening details.

HS20 LOADING

Texas Department of Transportation
Bridge Division

SINGLE BOX CULVERTS CAST-IN-PLACE 0' TO 30' FILL

SCC-7

FILE: scc07ste.dgn	DN: GAF	CK: LMW	DW: BWH/TxDOT	CK: GAF
©TxDOT May 2005	DISTRICT	FEDERAL AID PROJECT		SHEET
REVISIONS				235
	COUNTY	CONTROL	SECT	JOB	HIGHWAY

P-200612-01

ACC:
LEVELS DISPLAYED

DISCLAIMER:
The use of this standard is governed by the "Texas Engineering Practice Act". No warranty of any kind is made by TxDOT for any purpose whatsoever. TxDOT assumes no responsibility for the conversion of this standard to other formats or for incorrect results or damages resulting from its use.

BOX DATA

SECTION DIMENSIONS					Fill Height	M (Min)	REINFORCING (in^2/ft) ②								① Lift Weight (Tons)
S (ft)	H (ft)	T_T (in)	T_B (in)	T_S (in)	(ft)	(in)	A_{S1}	A_{S2}	A_{S3}	A_{S4}	A_{S5}	A_{S6}	A_{S7}	A_{S8}	
7	4	8	8	8	<2	-	0.26	0.49	0.21	0.19	0.19	0.19	0.19	0.19	10.4
7	4	8	8	8	2<3	47	0.24	0.33	0.22	0.19	-	-	-	-	10.4
7	4	8	8	8	3-5	43	0.19	0.19	0.19	0.19	-	-	-	-	10.4
7	4	8	8	8	10	43	0.19	0.25	0.25	0.19	-	-	-	-	10.4
7	4	8	8	8	15	41	0.26	0.34	0.35	0.19	-	-	-	-	10.4
7	4	8	8	8	20	41	0.33	0.44	0.45	0.19	-	-	-	-	10.4
7	4	8	8	8	25	41	0.40	0.54	0.55	0.19	-	-	-	-	10.4
7	4	8	8	8	30	41	0.47	0.64	0.65	0.19	-	-	-	-	10.4
7	4	8	8	8	35	41	0.55	0.75	0.75	0.19	-	-	-	-	10.4
7	5	8	8	8	<2	-	0.23	0.52	0.24	0.19	0.21	0.19	0.19	0.19	11.2
7	5	8	8	8	2<3	59	0.22	0.36	0.25	0.19	-	-	-	-	11.2
7	5	8	8	8	3-5	43	0.19	0.20	0.20	0.19	-	-	-	-	11.2
7	5	8	8	8	10	43	0.19	0.27	0.28	0.19	-	-	-	-	11.2
7	5	8	8	8	15	41	0.23	0.37	0.38	0.19	-	-	-	-	11.2
7	5	8	8	8	20	41	0.29	0.48	0.49	0.19	-	-	-	-	11.2
7	5	8	8	8	25	41	0.35	0.58	0.59	0.19	-	-	-	-	11.2
7	5	8	8	8	30	41	0.41	0.69	0.70	0.19	-	-	-	-	11.2
7	5	8	8	8	35	41	0.47	0.80	0.81	0.19	-	-	-	-	11.2
7	6	8	8	8	<2	-	0.21	0.54	0.26	0.19	0.22	0.19	0.19	0.19	12.0
7	6	8	8	8	2<3	59	0.20	0.39	0.27	0.19	-	-	-	-	12.0
7	6	8	8	8	3-5	47	0.19	0.22	0.22	0.19	-	-	-	-	12.0
7	6	8	8	8	10	43	0.19	0.28	0.30	0.19	-	-	-	-	12.0
7	6	8	8	8	15	41	0.20	0.39	0.40	0.19	-	-	-	-	12.0
7	6	8	8	8	20	41	0.26	0.50	0.51	0.19	-	-	-	-	12.0
7	6	8	8	8	25	41	0.31	0.61	0.62	0.19	-	-	-	-	12.0
7	6	8	8	8	30	41	0.36	0.72	0.73	0.19	-	-	-	-	12.0
7	6	8	8	8	35	41	0.42	0.83	0.85	0.19	-	-	-	-	12.0
7	7	8	8	8	<2	-	0.19	0.56	0.27	0.19	0.22	0.19	0.19	0.19	12.8
7	7	8	8	8	2<3	59	0.19	0.41	0.29	0.19	-	-	-	-	12.8
7	7	8	8	8	3-5	59	0.19	0.23	0.23	0.19	-	-	-	-	12.8
7	7	8	8	8	10	47	0.19	0.29	0.31	0.19	-	-	-	-	12.8
7	7	8	8	8	15	43	0.19	0.40	0.42	0.19	-	-	-	-	12.8
7	7	8	8	8	20	41	0.24	0.51	0.53	0.19	-	-	-	-	12.8
7	7	8	8	8	25	41	0.28	0.62	0.64	0.19	-	-	-	-	12.8
7	7	8	8	8	30	41	0.33	0.73	0.75	0.19	-	-	-	-	12.8
7	7	8	8	8	35	41	0.38	0.84	0.87	0.19	-	-	-	-	12.8
7	3	8	8	8	<2	-	0.28	0.36	0.24	0.19	0.21	0.19	0.19	0.19	9.6
7	3	8	8	8	30	58	0.53	0.49	0.50	0.19	-	-	-	-	9.6

⑤

① For Box Length = 8'-0"

② A_{S1} thru A_{S4}, A_{S7} and A_{S8} are minimum required areas of reinforcement per linear foot of box length. A_{S6} and A_{S5} are minimum required areas of reinforcement per linear foot of box width.

⑤ These designs were created by TxDOT and are not shown in the ASTM Specifications.

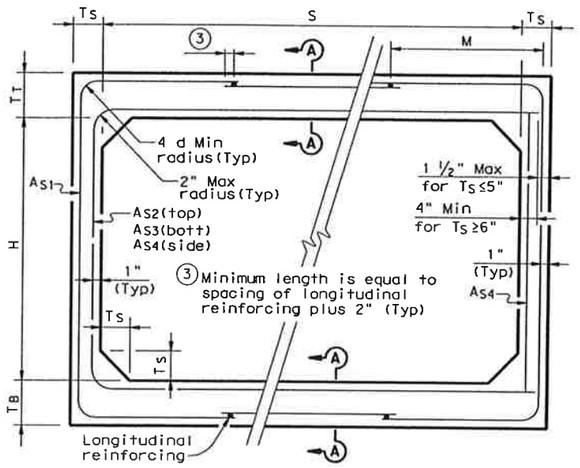

CORNER OPTION "A" CORNER OPTION "B"

FILL HEIGHT 2 FT AND GREATER

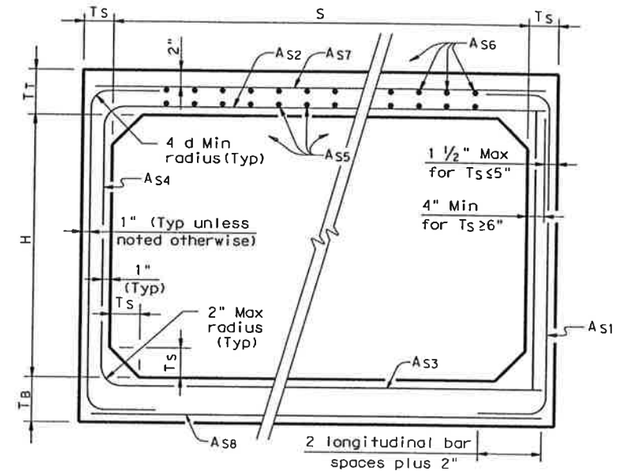

CORNER OPTION "A" CORNER OPTION "B"

FILL HEIGHT LESS THAN 2 FT

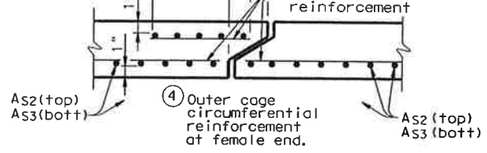

SECTION A-A

(TOP AND BOTTOM SLAB JOINT REINFORCEMENT)

GENERAL NOTES:

Designs shown conform to ASTM C1433. Refer to ASTM C1433 for information or details not shown.

Use welded wire reinforcement conforming to ASTM A497 with a minimum specified yield stress of 65 ksi.

All concrete shall be Class "H" Concrete with a minimum compressive strength of 5,000 psi.

See SCP-MD standard sheet for miscellaneous details and notes not shown.

In lieu of furnishing the designs shown on this sheet, the contractor may furnish an alternate design that is equal to or exceeds the box design for the design fill height in the table. Shop plans for alternate designs shall be submitted in accordance with Item "Precast Concrete Structures".

"CONSTRUCTION RECORD DRAWINGS_8-01-2009

HS20 LOADING

Texas Department of Transportation
Bridge Division

SINGLE BOX CULVERTS PRECAST
7'-0" SPAN

SCP-7

FILE: scp07ste.dgn	DN: GAF	CK: LMW	DW: BWH/TxDOT	CK: GAF
©TxDOT May 2005	DISTRICT	FEDERAL AID PROJECT		SHEET
REVISIONS				235A
06-06 ~ Revised reinforcing.	COUNTY	CONTROL	SECT	JOB	HIGHWAY
					P-200612-01

ACC:
LEVELS DISPLAYED

DISCLAIMER:
The use of this standard is governed by the "Texas Engineering Practice Act". No warranty of any kind is made by TxDOT for any purpose whatsoever. TxDOT assumes no responsibility for the conversion of this standard to other formats or for incorrect results or damages resulting from its use.

SECTION DIMENSIONS				FILL HEIGHT ⑤	BILLS OF REINFORCING STEEL (For Box Length = 40 feet)																													QUANTITIES					
					Bars B					Bars C							Bars D							Bars E~#4 at 18" Max			Bars F_1 ~#4				Bars F_2~#4 at 18" Max			Bars H 4~#4		Bars K		Per foot of Barrel		Curb		Total	
S	H	T	U		No.	Size	Spa	Length	Weight	No.	Size	Spa	Length	Weight	"X"	"Y"	No.	Size	Spa	Length	Weight	"Y"	"Z"	No.	Length	Wt	No.	Spa	Length	Wt	No.	Length	Wt	Length	Wt	No.	Wt	Conc (CY)	Reinf (Lb)	Conc (CY)	Reinf (Lb)	Conc (CY)	Reinf (Lb)
8'-0"	4'-0"	7"	7"	13'	162	#6	6"	8'-11"	2,170	194	#5	5"	8'- 8"	1,754	4'- 5"	4'- 3"	194	#5	5"	6'-10"	1,383	4'- 3"	2'- 7"	56	4'-0"	150	13	7"	39'-9"	345	32	39'-9"	850	8'-11"	24	20	57	0.569	166.3	0.7	81	23.5	6,733
8'-0"	4'-0"	8"	7"	16'	194	#6	5"	8'-11"	2,598	194	#5	5"	8'- 9"	1,770	4'- 6"	4'- 3"	194	#5	5"	6'-11"	1,400	4'- 3"	2'- 8"	56	4'-0"	150	6	18"	39'-9"	159	32	39'-9"	850	8'-11"	24	20	57	0.626	173.2	0.7	81	25.7	7,008
8'-0"	4'-0"	9"	8"	20'	194	#6	5"	9'- 1"	2,647	194	#5	5"	8'-10"	1,787	4'- 7"	4'- 3"	194	#5	5"	7'- 0"	1,416	4'- 3"	2'- 9"	56	4'-0"	150	6	18"	39'-9"	159	32	39'-9"	850	9'- 1"	24	22	62	0.716	175.2	0.7	86	29.3	7,095
8'-0"	4'-0"	10"	8"	23'	194	#6	5"	9'- 1"	2,647	138	#6	7"	8'-11"	1,848	4'- 8"	4'- 3"	138	#6	7"	7'- 6"	1,555	4'- 3"	3'- 3"	56	4'-0"	150	6	18"	39'-9"	159	32	39'-9"	850	9'- 1"	24	22	62	0.774	180.2	0.7	86	31.7	7,295
8'-0"	4'-0"	11"	9"	30'	162	#7	6"	9'- 3"	3,063	194	#5	5"	9'- 0"	1,821	4'- 9"	4'- 3"	194	#5	5"	7'- 2"	1,450	4'- 3"	2'-11"	56	4'-0"	150	6	18"	39'-9"	159	34	39'-9"	903	9'- 3"	25	22	62	0.867	188.7	0.7	87	35.4	7,633
8'-0"	5'-0"	7"	7"	13'	162	#6	6"	8'-11"	2,170	194	#5	5"	9'- 8"	1,956	5'- 5"	4'- 3"	194	#5	5"	6'-10"	1,383	4'- 3"	2'- 7"	56	5'-0"	187	13	7"	39'-9"	345	36	39'-9"	956	8'-11"	24	20	57	0.612	174.9	0.7	81	25.2	7,078
8'-0"	5'-0"	8"	7"	16'	194	#6	5"	8'-11"	2,598	194	#5	5"	9'- 9"	1,973	5'- 6"	4'- 3"	194	#5	5"	6'-11"	1,400	4'- 3"	2'- 8"	56	5'-0"	187	6	18"	39'-9"	159	36	39'-9"	956	8'-11"	24	20	57	0.669	181.8	0.7	81	27.5	7,354
8'-0"	5'-0"	9"	8"	20'	194	#6	5"	9'- 1"	2,647	194	#5	5"	9'-10"	1,990	5'- 7"	4'- 3"	194	#5	5"	7'- 0"	1,416	4'- 3"	2'- 9"	56	5'-0"	187	6	18"	39'-9"	159	36	39'-9"	956	9'- 1"	24	22	62	0.765	183.9	0.7	86	31.3	7,441
8'-0"	5'-0"	10"	8"	23'	194	#6	5"	9'- 1"	2,647	194	#5	5"	9'-11"	2,007	5'- 8"	4'- 3"	194	#5	5"	7'- 1"	1,433	4'- 3"	2'-10"	56	5'-0"	187	6	18"	39'-9"	159	36	39'-9"	956	9'- 1"	24	22	62	0.823	184.7	0.7	86	33.6	7,475
8'-0"	5'-0"	11"	9"	30'	194	#7	5"	9'- 3"	3,668	194	#5	5"	10'- 0"	2,023	5'- 9"	4'- 3"	194	#5	5"	7'- 2"	1,450	4'- 3"	2'-11"	56	5'-0"	187	6	18"	39'-9"	159	38	39'-9"	1,009	9'- 3"	25	22	62	0.923	212.4	0.7	87	37.6	8,583
8'-0"	6'-0"	7"	7"	13'	194	#6	5"	8'-11"	2,598	162	#5	6"	10'- 8"	1,802	6'- 5"	4'- 3"	162	#5	6"	6'-10"	1,155	4'- 3"	2'- 7"	56	6'-0"	224	13	7"	39'-9"	345	40	39'-9"	1,062	8'-11"	24	20	57	0.655	179.7	0.7	81	26.9	7,267
8'-0"	6'-0"	8"	7"	16'	194	#6	5"	8'-11"	2,598	194	#5	5"	10'- 9"	2,175	6'- 6"	4'- 3"	194	#5	5"	6'-11"	1,400	4'- 3"	2'- 8"	56	6'-0"	224	6	18"	39'-9"	159	40	39'-9"	1,062	8'-11"	24	20	57	0.712	190.5	0.7	81	29.2	7,699
8'-0"	6'-0"	9"	8"	20'	194	#6	5"	9'- 1"	2,647	194	#5	5"	10'-10"	2,192	6'- 7"	4'- 3"	194	#5	5"	7'- 0"	1,416	4'- 3"	2'- 9"	56	6'-0"	224	6	18"	39'-9"	159	40	39'-9"	1,062	9'- 1"	24	22	62	0.815	192.5	0.7	86	33.3	7,786
8'-0"	6'-0"	10"	8"	23'	194	#6	5"	9'- 1"	2,647	194	#5	5"	10'-11"	2,209	6'- 8"	4'- 3"	194	#5	5"	7'- 1"	1,433	4'- 3"	2'-10"	56	6'-0"	224	6	18"	39'-9"	159	40	39'-9"	1,062	9'- 1"	24	22	62	0.872	193.4	0.7	86	35.6	7,820
8'-0"	6'-0"	11"	9"	30'	194	#7	5"	9'- 3"	3,668	194	#5	5"	11'- 0"	2,226	6'- 9"	4'- 3"	194	#5	5"	7'- 2"	1,450	4'- 3"	2'-11"	56	6'-0"	224	6	18"	39'-9"	159	42	39'-9"	1,115	9'- 3"	25	22	62	0.978	221.1	0.7	87	39.8	8,929
8'-0"	7'-0"	7"	7"	13'	194	#6	5"	8'-11"	2,598	194	#5	5"	11'- 8"	2,361	7'- 5"	4'- 3"	194	#5	5"	6'-10"	1,383	4'- 3"	2'- 7"	56	7'-0"	262	13	7"	39'-9"	345	40	39'-9"	1,062	8'-11"	24	20	57	0.699	200.3	0.7	81	28.7	8,092
8'-0"	7'-0"	8"	7"	16'	194	#6	5"	8'-11"	2,598	194	#5	5"	11'- 9"	2,378	7'- 6"	4'- 3"	194	#5	5"	6'-11"	1,400	4'- 3"	2'- 8"	56	7'-0"	262	6	18"	39'-9"	159	40	39'-9"	1,062	8'-11"	24	20	57	0.755	196.5	0.7	81	30.9	7,940
8'-0"	7'-0"	9"	8"	20'	194	#6	5"	9'- 1"	2,647	194	#5	5"	11'-10"	2,394	7'- 7"	4'- 3"	194	#5	5"	7'- 0"	1,416	4'- 3"	2'- 9"	56	7'-0"	262	6	18"	39'-9"	159	40	39'-9"	1,062	9'- 1"	24	22	62	0.864	198.5	0.7	86	35.3	8,026
8'-0"	7'-0"	10"	8"	23'	162	#7	6"	9'- 1"	3,008	194	#5	5"	11'-11"	2,411	7'- 8"	4'- 3"	194	#5	5"	7'- 1"	1,433	4'- 3"	2'-10"	56	7'-0"	262	6	18"	39'-9"	159	40	39'-9"	1,062	9'- 1"	24	22	62	0.922	208.4	0.7	86	37.6	8,421
8'-0"	7'-0"	11"	9"	30'	194	#7	5"	9'- 3"	3,668	194	#5	5"	12'- 0"	2,428	7'- 9"	4'- 3"	194	#5	5"	7'- 2"	1,450	4'- 3"	2'-11"	56	7'-0"	262	6	18"	39'-9"	159	42	39'-9"	1,115	9'- 3"	25	22	62	1.034	227.1	0.7	87	42.1	9,169
8'-0"	8'-0"	7"	7"	13'	194	#6	5"	8'-11"	2,598	194	#5	5"	12'- 8"	2,563	8'- 5"	4'- 3"	194	#5	5"	6'-10"	1,383	4'- 3"	2'- 7"	56	8'-0"	299	13	7"	39'-9"	345	44	39'-9"	1,168	8'-11"	24	20	57	0.742	208.9	0.7	81	30.4	8,437
8'-0"	8'-0"	8"	7"	16'	194	#6	5"	8'-11"	2,598	194	#5	5"	12'- 9"	2,580	8'- 6"	4'- 3"	194	#5	5"	6'-11"	1,400	4'- 3"	2'- 8"	56	8'-0"	299	6	18"	39'-9"	159	44	39'-9"	1,168	8'-11"	24	20	57	0.798	205.1	0.7	81	32.6	8,285
8'-0"	8'-0"	9"	8"	20'	194	#6	5"	9'- 1"	2,647	194	#5	5"	12'-10"	2,597	8'- 7"	4'- 3"	194	#5	5"	7'- 0"	1,416	4'- 3"	2'- 9"	56	8'-0"	299	6	18"	39'-9"	159	44	39'-9"	1,168	9'- 1"	24	22	62	0.914	207.2	0.7	86	37.3	8,372
8'-0"	8'-0"	10"	8"	23'	162	#7	6"	9'- 1"	3,008	194	#5	5"	12'-11"	2,614	8'- 8"	4'- 3"	194	#5	5"	7'- 1"	1,433	4'- 3"	2'-10"	56	8'-0"	299	6	18"	39'-9"	159	44	39'-9"	1,168	9'- 1"	24	22	62	0.971	217.0	0.7	86	39.5	8,767
8'-0"	8'-0"	11"	9"	30'	194	#7	5"	9'- 3"	3,668	194	#5	5"	13'- 0"	2,630	8'- 9"	4'- 3"	194	#5	5"	7'- 2"	1,450	4'- 3"	2'-11"	56	8'-0"	299	6	18"	39'-9"	159	46	39'-9"	1,221	9'- 3"	25	22	62	1.090	235.7	0.7	87	44.3	9,514

"CONSTRUCTION RECORD DRAWINGS_8-01-2009

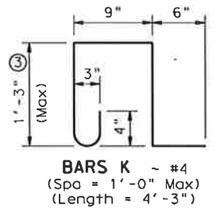

BARS K ~ #4
(Spa = 1'-0" Max)
(Length = 4'-3")

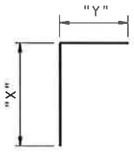

BARS C

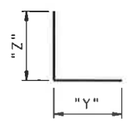

BARS D

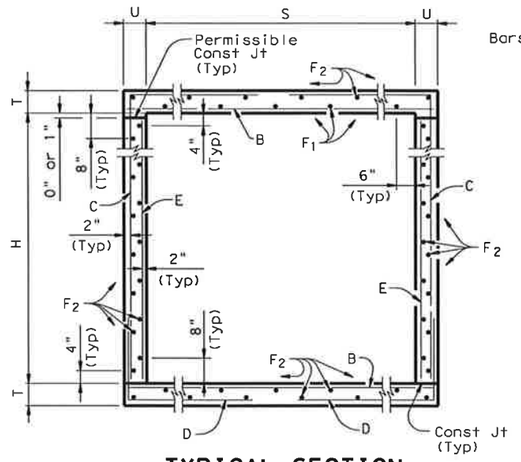

TYPICAL SECTION

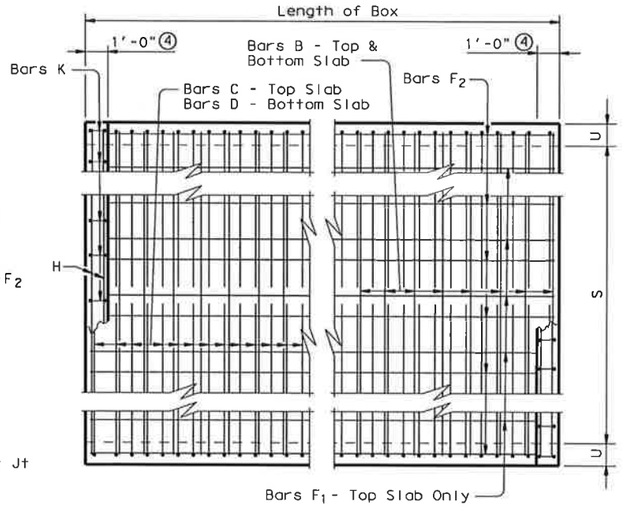

PLAN OF REINF STEEL

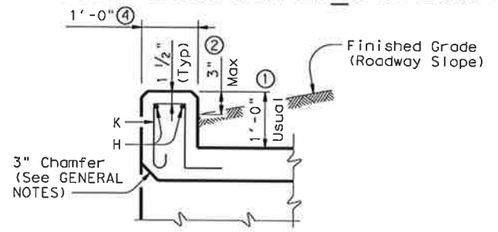

SECTION THRU CURB

① 0" min to 5'-0" max. Estimated curb heights are shown elsewhere in the plans. For structures without railing and curbs taller than 1'-0", refer to ECD standard. For structures with T6 bridge rail, refer to T6-CM standard. For structures with bridge rail, other than T6, refer to RAC standard.

② For vehicle safety, the following requirements must be met:
- For structures without bridge rail, curbs shall project no more than 3" above finished grade.
- For structures with bridge rail, curbs shall be flush with finished grade.

Curb heights shall be reduced, if necessary, to meet the above requirements. No changes will be made in quantities and no additional compensation will be allowed for this work.

③ For curbs less than 1'-0" high, tilt bars K or reduce bar height as necessary to maintain cover. For curbs less than 3" high, bars K may be omitted.

④ 1'-0" typical. 2'-0" when RAC standard is referred to elsewhere in the plans.

⑤ For each box size, minimum fill height shown shall be used for all culverts with less than 2'-0" of fill.

GENERAL NOTES:

Designed according to current AASHTO Standard and Interim Specifications.

Designed to the maximum fill heights shown.

All reinforcing steel shall be Grade 60.

All concrete shall be Class "C" with these exceptions: use Class "S" for top slabs of culverts with overlay, with 1-to-2 course surface treatment, or with the top slab as the final riding surface.

Class "C" concrete shall have a minimum compressive strength of 3,600 psi. Class "S" concrete shall have a minimum compressive strength of 4,000 psi.

The use of permanent forms is not allowed.

Reinforcing bars shall be adjusted to provide a minimum of 1 ¼ inches clear cover.

The bottom edge of the top slab shall be chamfered 3 inches at the entrance.

Construction joints shown at the flow line may be raised a maximum of 6 inches at the Contractor's option. If this option is used, Bars E may be cut off or raised, and Bars C and D may be reversed.

See Standard SCC-MD for skewed ends, angle sections and lengthening details.

HS20 LOADING

Texas Department of Transportation
Bridge Division

SINGLE BOX CULVERTS CAST-IN-PLACE 0' TO 30' FILL

SCC-8

FILE: scc08ste.dgn	DN: CAF	CK: LMW	DW: BWH/TxDOT	CK: CAF	
©TxDOT May 2005	DISTRICT	FEDERAL AID PROJECT			SHEET
REVISIONS					236
	COUNTY		CONTROL	SECT	JOB	HIGHWAY
					P-200612-01

ACC:
LEVELS DISPLAYED

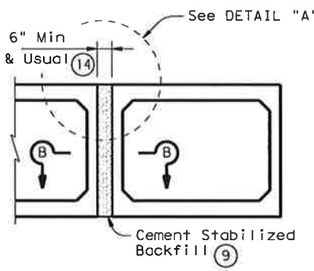

MULTIPLE UNIT PLACEMENT

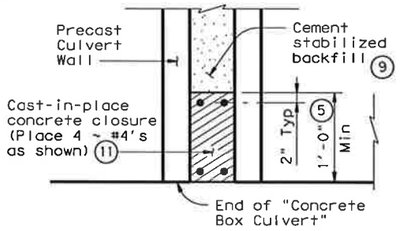

SECTION B-B

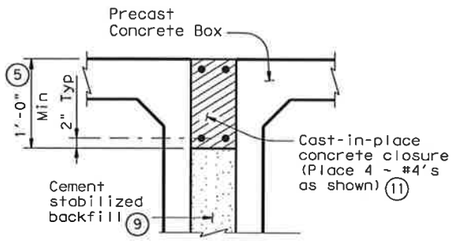

DETAIL "A" (13)

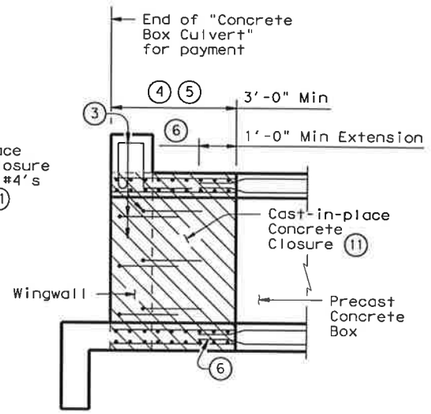

WINGWALL CONNECTION

(Also applies to Safety End Treatment)

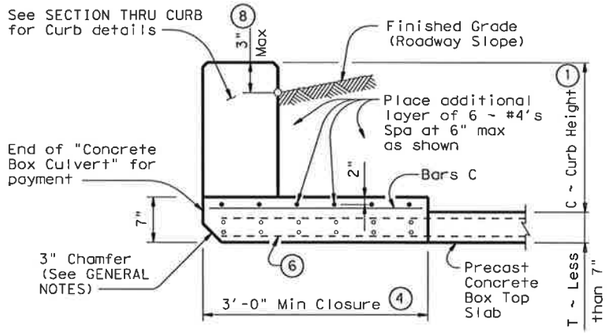

SECTION THRU TOP SLABS LESS THAN 7"

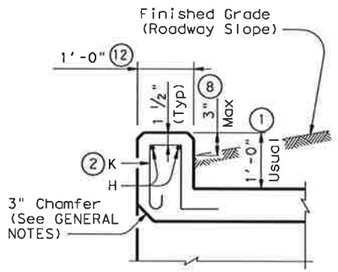

SECTION THRU CURB

(10) QUANTITIES PER FOOT OF CURB	
Reinforcing Steel	4.18 Lb
Concrete	0.037 CY

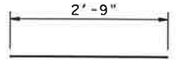

BARS C ~ #4
(Spa = 1'-0" Max)

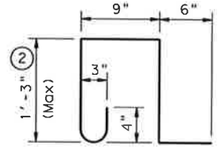

BARS K ~ #4
(Spa = 1'-0" Max)
(Length = 4'-3")

1. 0" min to 5'-0" max. Estimated curb heights are shown elsewhere in the plans. For structures without railing and curbs taller than 1'-0", refer to ECD standard. For structures with T6 bridge rail, refer to T6-CM standard. For structures with bridge rail, other than T6, refer to RAC standard.
2. For curbs less than 1'-0" high, tilt Bars K or reduce bar height as necessary to maintain cover. For curbs less than 3" high, Bars K may be omitted.
3. Curb, Wingwall or Safety End Treatment reinforcing shall extend into concrete closure. Any reinforcing that does not fit into the closure shall be bent or trimmed as necessary.
4. Cast-in-place concrete closure shall be 3'-0" min. Boxes shall be cast short or broken back in the field. All reinforcing in the closure shall be the same size and spacing as in the precast box section. Except where shown otherwise, the cast-in-place closure shall be flush with the inside and outside faces of the precast box section.
5. For multiple unit placements the length of the closure for the interior walls may be adjusted as necessary. The length of the top slab, bottom slab, and exterior wall closure shall not be less than 3'-0". See Section B-B detail when interior walls are cast full length.
6. Precast box reinforcing shall extend a minimum of 1'-0" into concrete closure (Typ).
7. Bands of reinforcing matching the inside and outside face reinforcing shall be placed in the gaps of the top and bottom slabs. A band matching the outside face reinforcing of the wall shall be placed in the gaps of the walls (placed in the outside face only). The bands shall be tack welded to the exposed reinforcing at each point of contact.
8. For vehicle safety, the following requirements must be met:
   - For structures without bridge rail, curbs shall project no more than 3" above finished grade.
   - For structures with bridge rail, curbs shall be flush with finished grade.

   Curb heights shall be reduced, if necessary, to meet the above requirements. No changes will be made in quantities and no additional compensation will be allowed for this work.
9. Cement Stabilized Backfill between boxes is considered part of the Box Culvert for payment.
10. All curb concrete and reinforcing is considered part of the Box Culvert for payment.
11. Any additional concrete and reinforcing required for the closures shall be considered as subsidiary to the Concrete Box Culvert.
12. 1'-0" typical. 2'-0" when RAC standard is referred to elsewhere in the plans.
13. For multiple unit placement with overlay, with 1 to 2 course surface treatment, or with the top slab as the final riding surface, provide wall closure as shown in DETAIL "A".
14. This dimension may be increased with approval of the Engineer to allow the precast boxes to be tunneled or jacked in accordance with Item 476, "Jacking, Boring, or Tunneling Pipe or Box". No payment will be made for any additional material in the gap between adjacent boxes.

GENERAL NOTES:

Designed according to current AASHTO Standard and Interim Specifications.

All closure concrete shall be Class "C" with a minimum compressive strength of 3600 psi and shall be placed according to the Item, "Concrete Structures".

Any additional concrete required for the closures shall be considered as subsidiary to the Concrete Box Culvert.

Refer to the Single Box Culverts Precast standard for details not shown.

The bottom edge of the top slab closure shall be chamfered 3 inches at the entrance.

HS20 LOADING

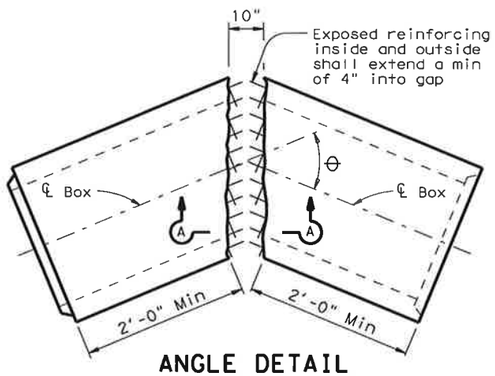

ANGLE DETAIL

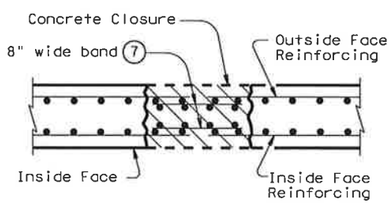

SECTION A-A

"CONSTRUCTION RECORD DRAWINGS _8-01-2009

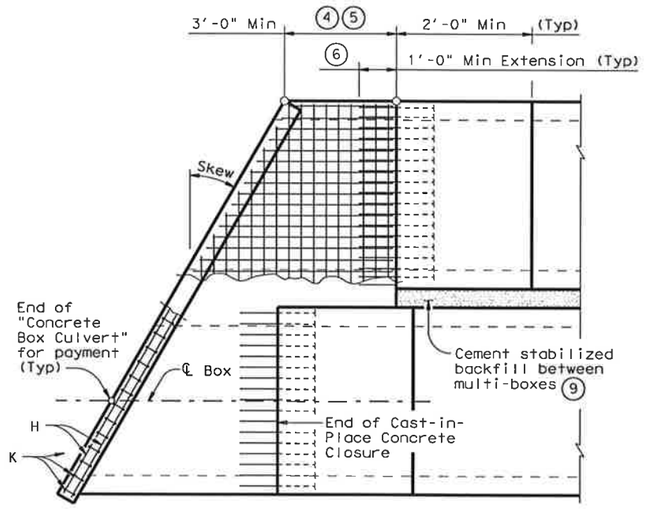

PLAN OF SKEWED ENDS

(Showing multi-box placement)

Texas Department of Transportation
Bridge Division

BOX CULVERTS PRECAST MISCELLANEOUS DETAILS

SCP-MD

FILE: scpmdste.dgn	DN: GAF	CK: LMW	DW: BWH/TxDOT	CK: GAF
© TxDOT May 2005	DISTRICT	FEDERAL AID PROJECT		SHEET
REVISIONS				237
	COUNTY	CONTROL	SECT	JOB	HIGHWAY
					P-200612-01

DISCLAIMER:
The use of this standard is governed by the "Texas Engineering Practice Act". No warranty of any kind is made by TxDOT for any purpose whatsoever. TxDOT assumes no responsibility for the conversion of this standard to other formats or for incorrect results or damages resulting from its use.

ACC:
LEVELS DISPLAYED

DISCLAIMER:
The use of this standard is governed by the "Texas Engineering Practice Act". No warranty of any kind is made by TxDOT for any purpose whatsoever. TxDOT assumes no responsibility for the conversion of this standard to other formats or for incorrect results or damages resulting from its use.

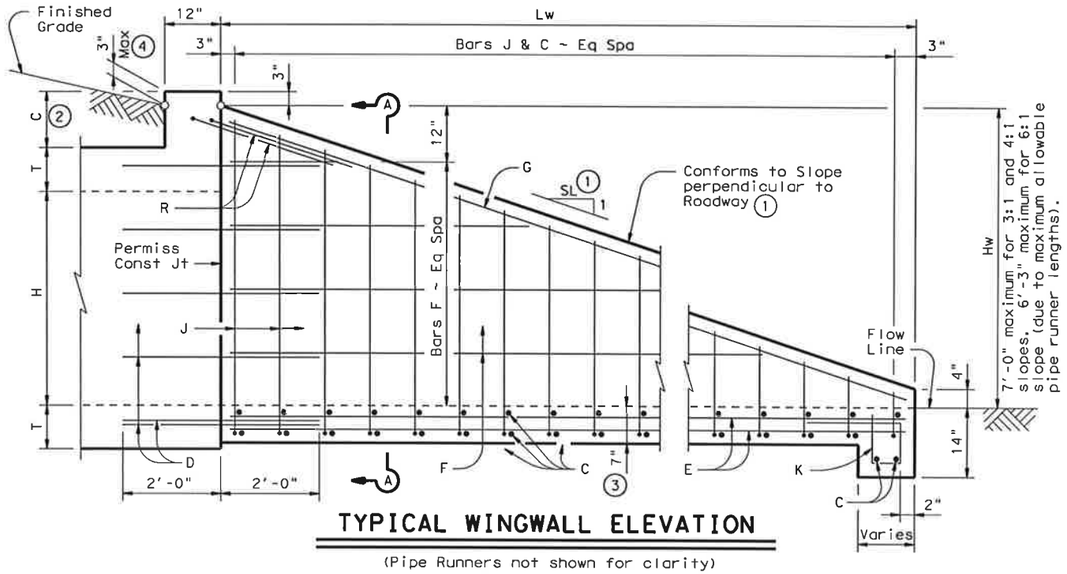

TYPICAL WINGWALL ELEVATION

(Pipe Runners not shown for clarity)

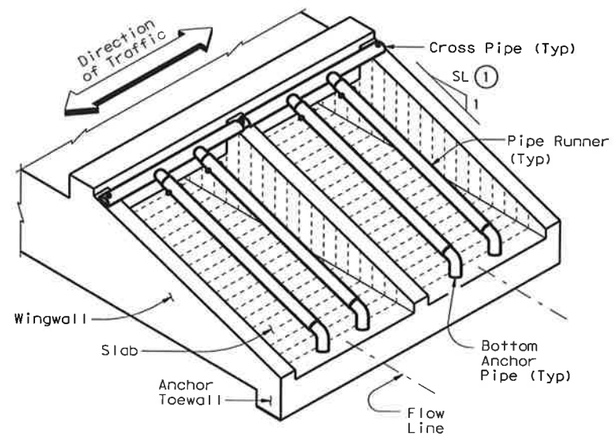

ISOMETRIC VIEW OF TYPICAL INSTALLATION

Formulas: (All values are in Feet)

$Hw = H + T + C - 0.250'$

$Lw = (Hw - 0.333') (SL)$

For Cast-in-place culverts:

$Atw = (N) (S) + (N+1) (U)$

For Precast culverts:

$Atw = (N) (2U+S) + (N-1) (0.500')$

Total Wingwall Area (S.F.)
$= (0.5) (Hw + 0.333') (Lw) (N+1)$

Total Concrete Volume (C.Y.)
$= [(\text{Wingwall Area}) (0.583') + (Lw) (Atw) (0.583') + (Atw) (1.167') (1.167' - 0.583')] \div (27)$

Pipe Runner Length
$= (Lw) (K1) - (1.917')$

Total Reinforcing (Lbs)
$= (1.55) (Lw) (Atw) + (4.43) (Atw) + (K2) (Hw) (N+1) (\sqrt{Lw})$

C = Height of Curb above top of Top Slab
Hw = Height of Wingwall
K = Constant Value for use in formulas

Slope SL:1	K1	K2
3:1	~ 1.054 ~	7.45
4:1	~ 1.031 ~	8.49
6:1	~ 1.014 ~	10.30

Atw = Anchor Toewall Length
Lw = Length of Wingwall
N = Number of Culvert Barrels
SL:1 = Side Slope Ratio (Horizontal : 1 Vertical)

See applicable box culvert standard for H, S, T, and U values.

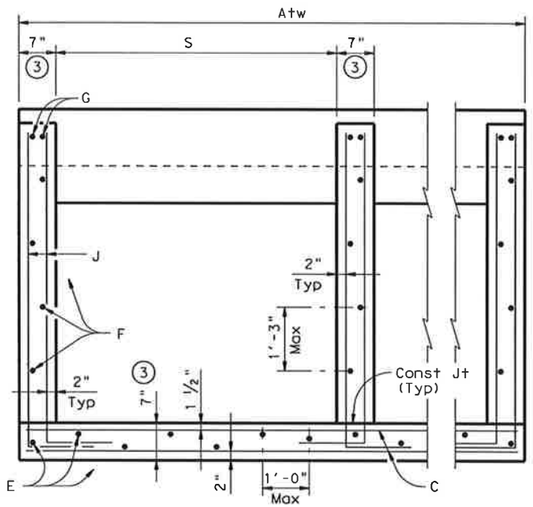

SECTION A-A

(Showing typical Wingwall and Wing Slab reinforcing)
(Pipe Runners not shown for clarity)

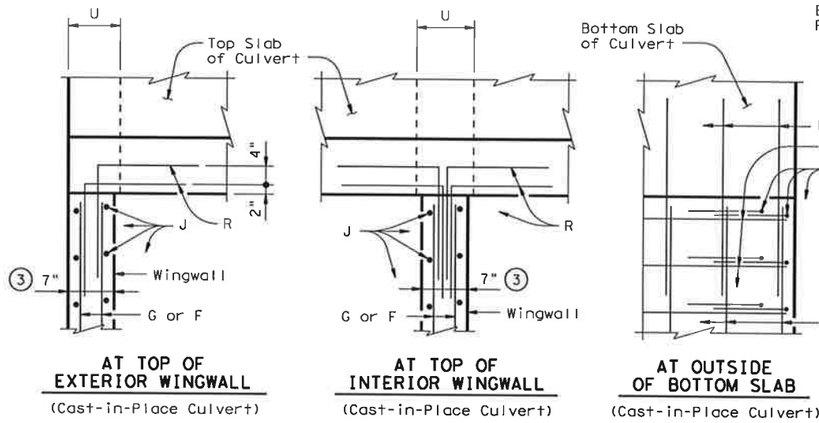

AT TOP OF EXTERIOR WINGWALL
(Cast-in-Place Culvert)

AT TOP OF INTERIOR WINGWALL
(Cast-in-Place Culvert)

AT OUTSIDE OF BOTTOM SLAB
(Cast-in-Place Culvert)

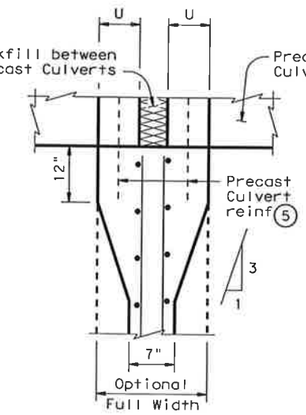

AT INTERIOR WINGWALL
(Precast Culvert)

PLAN VIEWS OF CORNER DETAILS

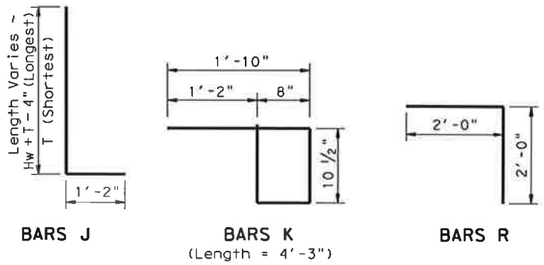

BARS J

BARS K
(Length = 4'-3")

BARS R

TABLE OF REINFORCING BAR SIZES & SPACING		
Bar	Size	Spacing
C	#4	10" Max
D	#4	match F & E
E	#4	1'- 0" Max
F	#4	1'- 3" Max
G	#6	Shown
J	#4	10" Max
K	#4	1'- 0" Max
R	#4	Shown

"CONSTRUCTION RECORD DRAWINGS_8-01-2009

(1) Recommended values of slope are: 3:1, 4:1, & 6:1. Slope shall be 3:1 or flatter.

(2) 0" min to 5'-0" max. Estimated curb heights are shown elsewhere in the plans. For structures without railing and curbs taller than 1'-0", refer to ECD standard.

(3) Wingwall and slab thicknesses may be the same as the adjacent culvert wall and slab thicknesses (7" Minimum). If thicknesses greater than the minimum (7") are used, no changes will be made in quantities and no additional compensation will be allowed.

(4) For vehicle safety, curbs shall project no more than 3" above finished grade. Curb heights shall be reduced, if necessary, to meet these requirements. No changes will be made in quantities and no additional compensation will be allowed for this work.

(5) For Culverts with C = 0", the precast culvert reinforcing may extend 1'-0" minimum into Wingwall. Wingwall Bars D and R may be omitted. Otherwise, refer to the "Wingwall Connection Detail" on the SCP-MD standard.

GENERAL NOTES:

Designed according to current AASHTO Standard and Interim Specifications.

The Safety End Treatments shown herein are intended for use in those installations where out of control vehicles are likely to traverse the openings approximately perpendicular to the Pipe Runners.

Pipe Runners are designed for a traversing load of 1,800 pounds at yield as recommended by Research Report 280-1, "Safety Treatment of Roadside Cross-Drainage Structures", Texas Transportation Institute, March 1981.

All reinforcing steel shall be Grade 60. All reinforcing shall be adjusted as necessary to provide a minimum clear cover of 1 ¼".

All concrete shall be Class "C" and shall have a minimum compressive strength of 3600 psi.

The quantities for Pipe Runners, reinforcing steel, and concrete, resulting from the formulas given herein are for Contractor's information only.

Pipe Runners, Cross Pipes, and Anchor Pipes shall conform to the requirements of ASTM A53 (Type E or S, Grade B), ASTM A500 (Grade B), or API 5LX52.

Bolts and nuts shall conform to ASTM A307.

All steel components, except the concrete reinforcing, shall be galvanized after fabrication. Galvanizing damaged during transport or construction shall be repaired in accordance with the specifications.

See BCS standard sheet for additional dimensions and information.

Alternate design drawings bearing the seal of a professional engineer will be acceptable for precast construction of the Safety End Treatments.

Texas Department of Transportation
Bridge Division

SAFETY END TREATMENT
FOR 0° SKEW BOX CULVERTS (MAXIMUM Hw = 7'-0") TYPE I ~ CROSS DRAINAGE

SETB-CD

FILE: setbcdse.dgn	DN: GAF	CK: CAT	DW: JRP	CK: CAF
© TxDOT May 2005	DISTRICT	FEDERAL AID PROJECT		SHEET
REVISIONS				238
	COUNTY	CONTROL	SECT	JOB	HIGHWAY
				P-200612-01

ACC:
LEVELS DISPLAYED

DISCLAIMER:
The use of this standard is governed by the "Texas Engineering Practice Act". No warranty of any kind is made by TxDOT for any purpose whatsoever. TxDOT assumes no responsibility for the conversion of this standard to other formats or for incorrect results or damages resulting from its use.

ACC:

LEVELS DISPLAYED

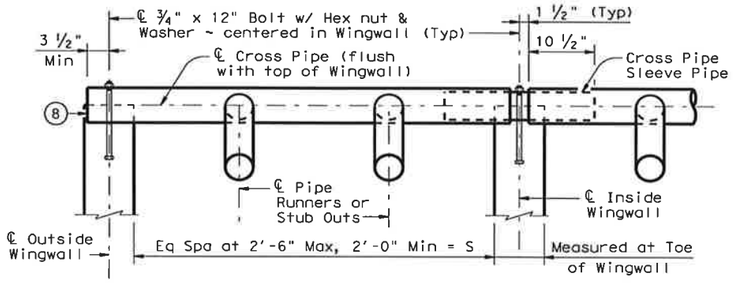

NOTE: At Contractor's option, the Cross Pipe may be made continuous across the Inside Wingwalls. If such option is selected, the Sleeve Pipe shall be omitted and a 15/16" diameter through hole be made in the Cross Pipe to accept the anchor bolt at the centerline of each Inside Wingwall.

CROSS PIPE INSTALLATION DETAILS

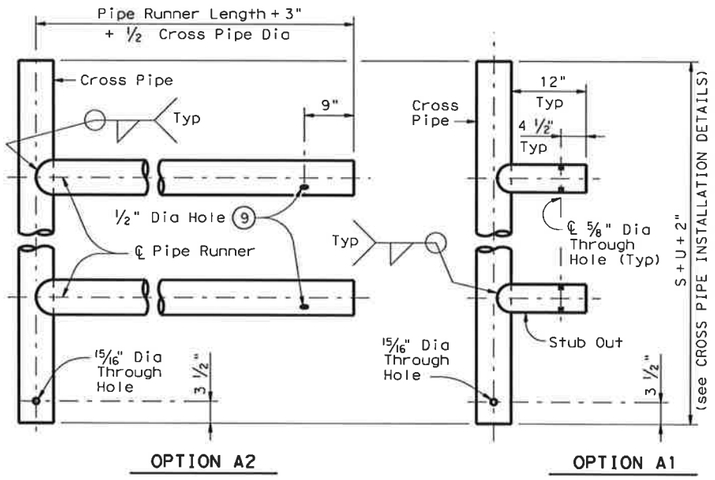

OPTION A2 OPTION A1

FOR USE IN OUTSIDE CULVERT BAY

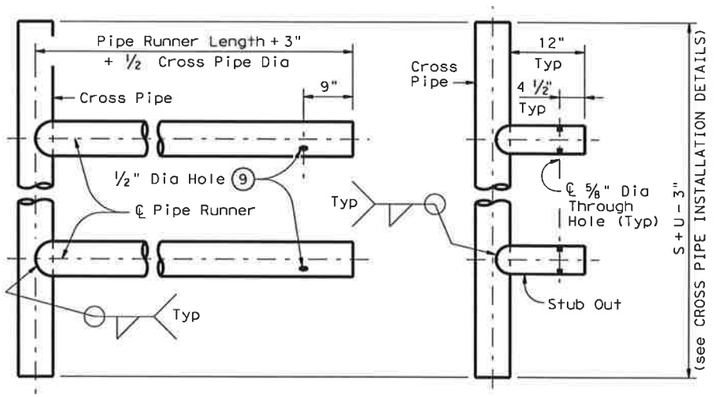

OPTION A2 OPTION A1

FOR USE IN INSIDE CULVERT BAY

CROSS PIPE AND CONNECTIONS DETAILS

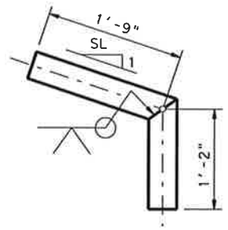

OPTION A

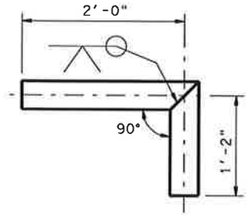

OPTION B

BOTTOM ANCHOR PIPE DETAILS ⑩

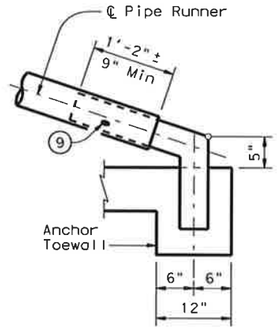

OPTION B1

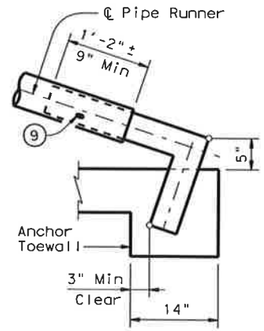

OPTION B2

BOTTOM ANCHOR TOEWALL DETAILS

(Wingwall not shown for clarity)

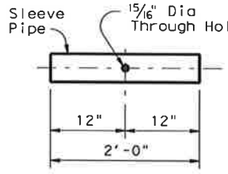

CROSS PIPE SLEEVE PIPE DETAILS

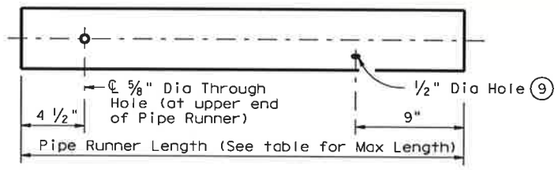

NOTE: The separate Pipe Runner shown is required when Cross Pipe Connection Option A1 is used.

PIPE RUNNER DETAILS

⑥ Cross Pipe shall be the same size as the Pipe Runner. Cross Pipe Stub Out shall be the same size as the Anchor Pipe.

⑦ Note that actual slope of Safety Pipe Runner may vary slightly from Side Slope.

⑧ Care shall be taken to ensure that Riprap concrete does not flow into the Cross Pipe so as to permit disassembly of the bolted connection to allow cleanout access.

⑨ After installation, the ½" hole shall be inspected to ensure that the lap of the Safety Pipe Runner with the Bottom Anchor Pipe is adequate.

⑩ At fabricator's option, a heat bend to a smooth 5" radius or a manufactured elbow (of the same material as the Runner) may be substituted for the mitered and welded joint in the Bottom Anchor Pipe.

MAXIMUM PIPE RUNNER LENGTHS & REQUIRED PIPE RUNNER AND ANCHOR PIPE SIZES ⑥

Maximum Pipe Runner Length	Required Pipe Runner Size			Required Anchor Pipe Size		
	Pipe Size	Pipe O.D.	Pipe I.D.	Pipe Size	Pipe O.D.	Pipe I.D.
10'- 0"	3" STD	3.500"	3.068"	2" STD	2.375"	2.067"
19'- 8"	4" STD	4.500"	4.026"	3" STD	3.500"	3.068"
34'- 2"	5" STD	5.563"	5.047"	4" STD	4.500"	4.026"

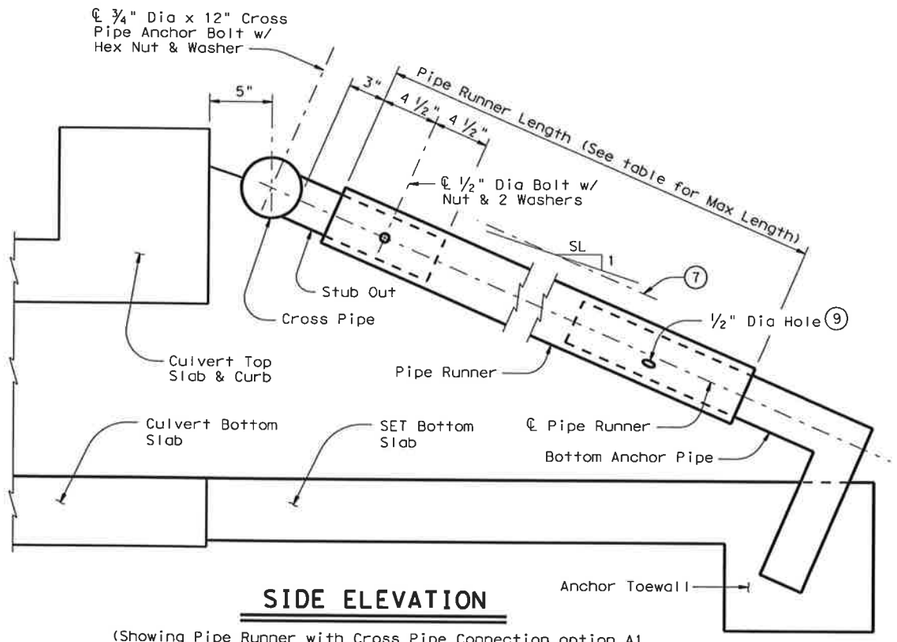

SIDE ELEVATION

(Showing Pipe Runner with Cross Pipe Connection option A1 and anchor Pipe option B2. Wingwall not shown for clarity)

"CONSTRUCTION RECORD DRAWINGS_8-01-2009

SHEET 2 OF 2

Texas Department of Transportation
Bridge Division

SAFETY END TREATMENT
FOR 0° SKEW BOX CULVERTS (MAXIMUM Hw = 7'-0") TYPE I ~ CROSS DRAINAGE

SETB-CD

FILE: setbcdse.dgn	DN: GAF	CK: CAT	DW: JRP	CK: GAF
© TxDOT May 2005	DISTRICT	FEDERAL AID PROJECT		SHEET
REVISIONS				239
	COUNTY	CONTROL	SECT	JOB	HIGHWAY
				P-200612-01

DISCLAIMER:
The use of this standard is governed by the "Texas Engineering Practice Act". No warranty of any kind is made by TxDOT for any purpose whatsoever. TxDOT assumes no responsibility for the conversion of this standard to other formats or for incorrect results or damages resulting from its use.

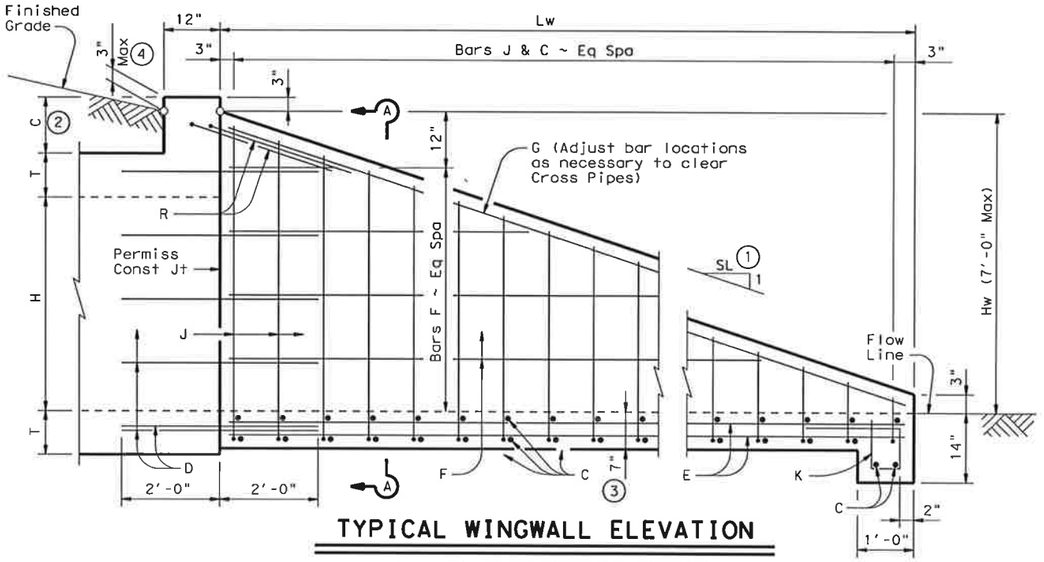

TYPICAL WINGWALL ELEVATION

(Cross Pipes not shown for clarity)

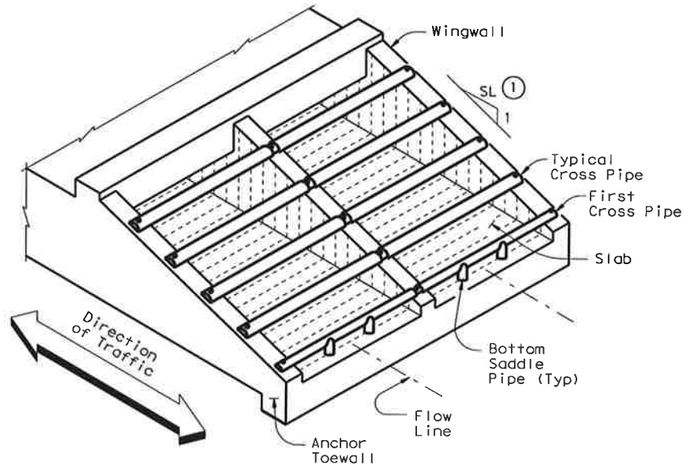

ISOMETRIC VIEW OF TYPICAL INSTALLATION

(Showing Bolted Anchor Option)

Formulas: (All values are in Feet)

$Hw = H + T + C - 0.250'$

$Lw = (Hw - 0.250') (SL)$

For Cast-in-place culverts:

$Atw = (N) (S) + (N+1) (U)$

For Precast culverts:

$Atw = (N) (2U+S) + (N-1) (0.500')$

Total Wingwall Area (S.F.)
$= (0.5) (Hw + 0.250') (Lw) (N+1)$

Total Concrete Volume (C.Y.)
$= [(\text{Wingwall Area}) (0.583') + (Lw) (Atw) (0.583') + (Atw) (1.000') (1.167' - 0.583')] \div (27)$

Total Reinforcing (Lbs)
$= (1.55) (Lw) (Atw) + (4.43) (Atw) + (K) (Hw) (N+1) (\sqrt{Lw})$

C = Height of Curb above top of Top Slab
Hw = Height of Wingwall
K = Constant Value for use in formulas
Slope SL:1 K
6:1 ~ 10.41
Atw = Anchor Toewall Length
Lw = Length of Wingwall
N = Number of Culvert Barrels
S = Clear Span of each Barrel
SL:1 = Side Slope Ratio (Horizontal : 1 Vertical)

See applicable box culvert standard for H, S, T, and U values.

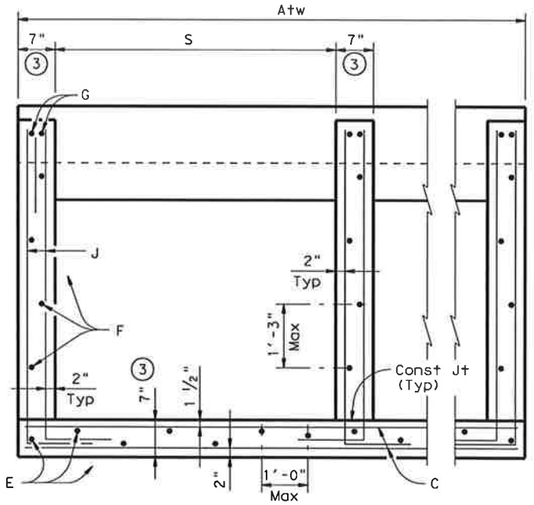

SECTION A-A

(Showing typical Wingwall and Wing Slab reinforcing)
(Pipe Runners not shown for clarity)

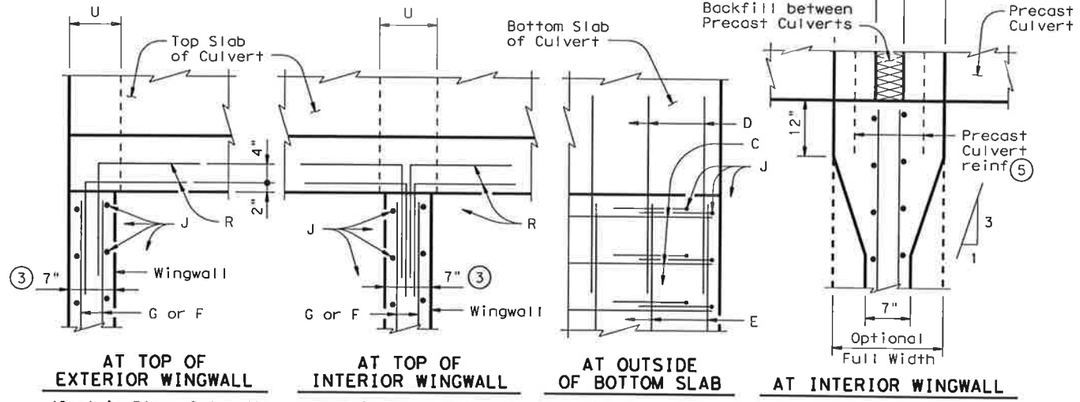

AT TOP OF EXTERIOR WINGWALL (Cast-in-Place Culvert)

AT TOP OF INTERIOR WINGWALL (Cast-in-Place Culvert)

AT OUTSIDE OF BOTTOM SLAB (Cast-in-Place Culvert)

AT INTERIOR WINGWALL (Precast Culvert)

PLAN VIEWS OF CORNER DETAILS

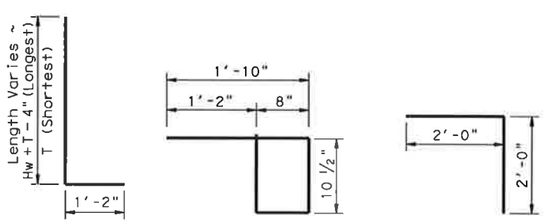

BARS J

BARS K (Length = 4'-3")

BARS R

TABLE OF REINFORCING BAR SIZES & SPACING		
Bar	Size	Spacing
C	#4	10" Max
D	#4	match F & E
E	#4	1'- 0" Max
F	#4	1'- 3" Max
G	#6	Shown
J	#4	10" Max
K	#4	1'- 0" Max
R	#4	Shown

(1) Recommended values of slope are: 3:1, 4:1, & 6:1. Slope shall be 3:1 or flatter.

(2) 0" min to 5'-0" max. Estimated curb heights are shown elsewhere in the plans. For structures without railing and curbs taller than 1'-0", refer to ECD standard.

(3) Wingwall and slab thicknesses may be the same as the adjacent culvert wall and slab thicknesses (7" Minimum). If thicknesses greater than the minimum (7") are used, no changes will be made in quantities and no additional compensation will be allowed.

(4) For vehicle safety, curbs shall project no more than 3" above finished grade. Curb heights shall be reduced, if necessary, to meet these requirements. No changes will be made in quantities and no additional compensation will be allowed for this work.

(5) For Culverts with C = 0", the precast culvert reinforcing may extend 1'-0" minimum into Wingwall. Wingwall Bars D and R may be omitted. Otherwise, refer to the "Wingwall Connection Detail" on the SCP-MD standard.

GENERAL NOTES:

Designed according to current AASHTO Standard and Interim Specifications.

The Safety End Treatments shown herein are intended for use in those installations where out of control vehicles are likely to traverse the openings approximately perpendicular to the Cross Pipes.

Cross Pipes are designed for a traversing load of 10,000 pounds at yield as recommended by Research Report 280-2F, "Safety Treatment of Roadside Parallel-Drainage Structures", Texas Transportation Institute, March 1981.

All concrete shall be Class "C" and shall have a minimum compressive strength of 3600 psi.

All reinforcing steel shall be Grade 60. All reinforcing shall be adjusted as necessary to provide a minimum clear cover of 1 ¼".

The quantities for concrete, reinforcing steel, and Cross Pipes resulting from the formulas given herein are for Contractor's information only.

Cross Pipes, Sleeve Pipes, and Saddle Pipes shall conform to the requirements of ASTM A53 (Type E or S, Grade B), ASTM A500 (Grade B), or API 5LX52.

Bolts and nuts shall conform to ASTM A307.

All steel components, except the concrete reinforcing, shall be galvanized after fabrication. Galvanizing damaged during transport or construction shall be repaired in accordance with the specifications.

See BCS standard sheet for additional dimensions and information.

Alternate design drawings bearing the seal of a professional engineer will be acceptable for precast construction of the Safety End Treatments.

"CONSTRUCTION RECORD DRAWINGS_8-01-2009

LEVELS DISPLAYED ACC:

Texas Department of Transportation
Bridge Division

SAFETY END TREATMENT
FOR BOX CULVERTS
(MAXIMUM Hw = 7'-0")
TYPE I ~ PARALLEL DRAINAGE

SETB-PD

FILE: setbpdse.dgn	DN: GAF	CK: CAT	DW: JRP	CK: GAF
©TxDOT May 2005	DISTRICT	FEDERAL AID PROJECT		SHEET 2A10
REVISIONS				
	COUNTY	CONTROL	SECT	JOB	HIGHWAY

P-200612-01

DISCLAIMER:
The use of this standard is governed by the "Texas Engineering Practice Act". No warranty of any kind is made by TxDOT for any purpose whatsoever. TxDOT assumes no responsibility for the completeness of this standard or for the consequences of its use. In no event will TxDOT be liable for any special, indirect or consequential damages whatsoever, either arising out of or in connection with the use of this standard or other formats or for incorrect results or damages resulting from its use.

ACC:

LEVELS DISPLAYED

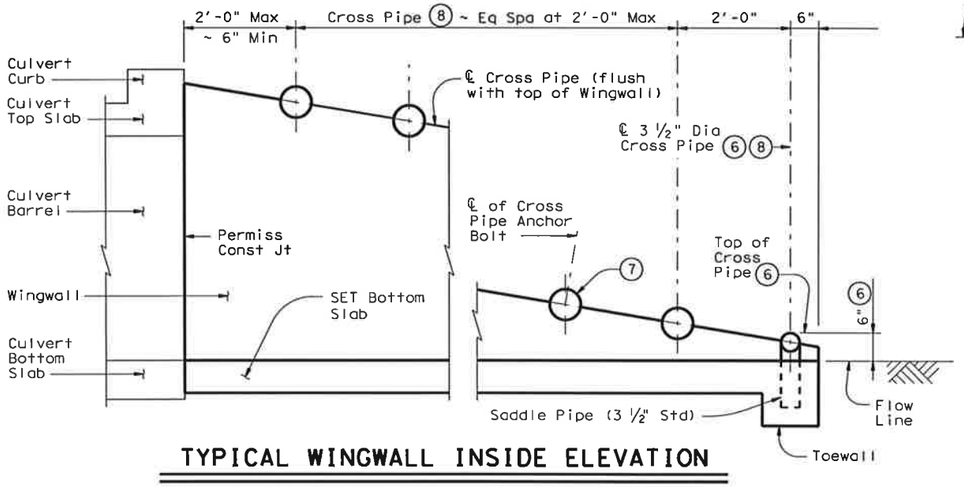

TYPICAL WINGWALL INSIDE ELEVATION

(Showing installation of Cross Pipes)

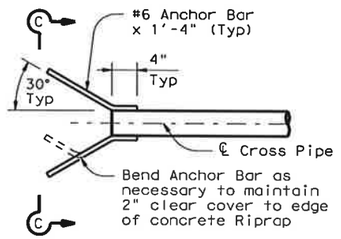

PART PLAN

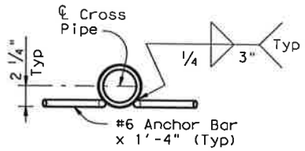

SECTION C-C

OPTIONAL ANCHOR BAR DETAILS

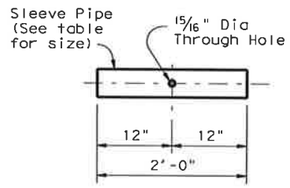

SLEEVE PIPE DETAILS (9)

REQUIRED PIPE SIZES (8)		
Culvert Span Sizes	Cross Pipe Size	Sleeve Pipe Size (9)
First Pipe	3 ½" STD	2 ½" STD
30" to 42"	4" STD	3" STD
48" to 72"	5" STD	4" STD
78" to 120"	6" STD	5" STD

STANDARD PIPE SIZES		
Pipe Size	Pipe O.D.	Pipe I.D.
2 ½" STD	2.875"	2.469"
3" STD	3.500"	3.068"
3 ½" STD	4.000"	3.548"
4" STD	4.500"	4.026"
5" STD	5.563"	5.047"
6" STD	6.625"	6.065"

(6) The proper installation of the first Cross Pipe is critical for vehicle safety. The top of the first Cross Pipe must be placed at no more than 6" above the flow line.

(7) The third Cross Pipe from the bottom of the Culvert shall always be installed using a bolted connection. Care shall be taken to ensure that concrete does not flow into this Cross Pipe so as to permit disassembly of the bolted connection to allow cleanout access.

(8) Cross Pipes and Sleeve Pipes (if required) shall be as shown in the REQUIRED PIPE SIZES table. Saddle Pipes for the 3 ½" first Cross Pipe shall also be 3 ½".

(9) At Contractor's option, the Cross Pipe may be continuous across the Inside Wingwalls. If such option is selected, the Sleeve Pipe shall be omitted and a 15/16" diameter through hole made in the Cross Pipe to accept the anchor bolt at the centerline of each Interior Wingwall.

(10) Riprap will be required when using the optional Anchor Bar details and shall be included in the Price Bid for Safety End Treatment. Such Riprap shall be concrete Riprap in accordance with Item 432, "Riprap".

"CONSTRUCTION RECORD DRAWINGS_8-01-2009

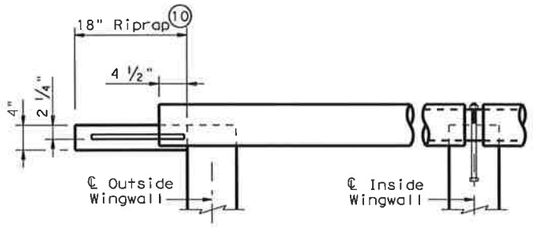

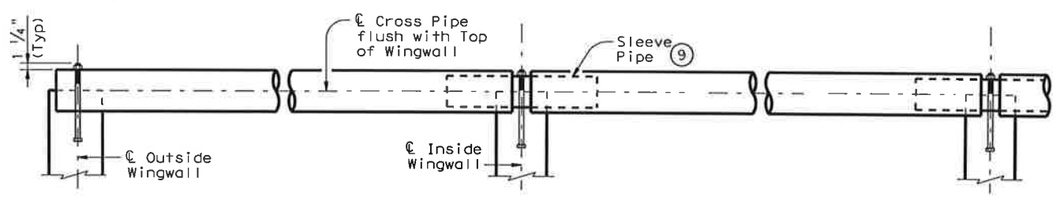

SECTION THROUGH INSTALLATION OF TYPICAL FULL CROSS PIPE

(Anchor details and dimensions are similar to those shown below in SECTION THROUGH INSTALLATION OF 3 ½" FIRST CROSS PIPE detail.)

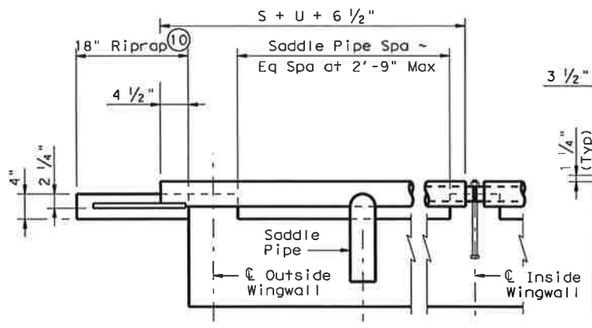

OUTSIDE CULVERT BARREL WITH OPTIONAL ANCHOR BARS & RIPRAP

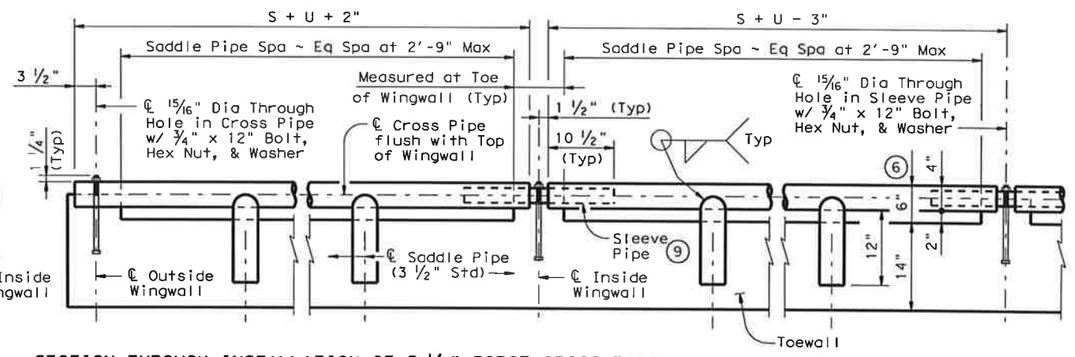

SECTION THROUGH INSTALLATION OF 3 ½" FIRST CROSS PIPE

OUTSIDE CULVERT BARREL WITH BOLTED ANCHOR

INSIDE CULVERT BARREL

CROSS PIPE INSTALLATION DETAILS

SHEET 2 OF 2

Texas Department of Transportation
Bridge Division

SAFETY END TREATMENT
FOR BOX CULVERTS
(MAXIMUM Hw = 7'-0")
TYPE I ~ PARALLEL DRAINAGE

SETB-PD

FILE: setbpdse.dgn	DN: GAF	CK: CAT	DW: JRP	CK: GAF
©TxDOT May 2005	DISTRICT	FEDERAL AID PROJECT		SHEET
REVISIONS				241
	COUNTY	CONTROL	SECT	JOB	HIGHWAY
				P-200612-01

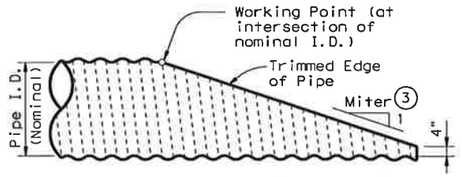

NOTE: All Pipe Runners, calculations, and dimensions are based on the pipe culverts mitered as shown in this detail. Alternate styles of mitered ends will require that appropriate adjustments be made to the values presented on this standard.

SIDE ELEVATION OF TYPICAL PIPE CULVERT MITER

(Showing Corrugated Metal Pipe Culvert.
Details of Concrete Pipe Culvert are similar.)

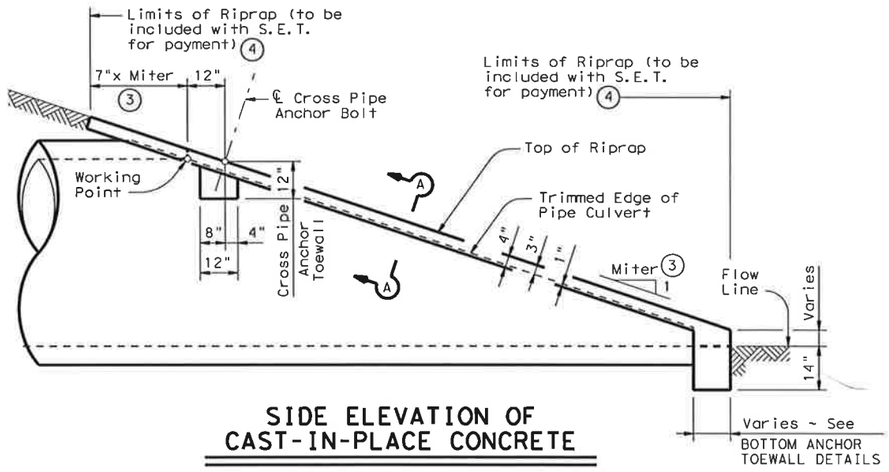

SIDE ELEVATION OF CAST-IN-PLACE CONCRETE

(Showing Concrete Pipe Culvert.
Details of Corrugated Metal Pipe Culvert are similar.
Pipe Runners not shown for clarity)

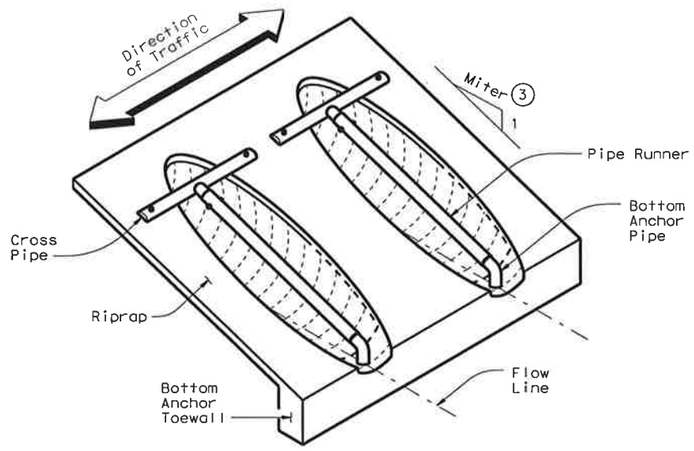

ISOMETRIC VIEW OF TYPICAL INSTALLATION

(Showing installation with no skew.)

CROSS PIPE LENGTHS & PIPE RUNNER LENGTHS (1)(2)

Nominal Culvert I.D.	Pipe Culvert Spa ~ G	Cross Pipe Length	Pipe Runner Length											
			3:1 Side Slope				4:1 Side Slope				6:1 Side Slope			
			0° Skew	15° Skew	30° Skew	45° Skew	0° Skew	15° Skew	30° Skew	45° Skew	0° Skew	15° Skew	30° Skew	45° Skew
24"	1'- 7"	3'- 5"	N/A	N/A	N/A	5'-10"	N/A	N/A	N/A	8'- 1"	N/A	N/A	N/A	12'- 9"
27"	1'- 8"	3'- 8"	N/A	N/A	5'- 5"	6'-11"	N/A	N/A	7'- 7"	9'- 7"	N/A	N/A	11'-11"	14'-11"
30"	1'-10"	3'-11"	N/A	N/A	6'- 4"	8'- 0"	N/A	N/A	8'- 9"	11'- 0"	N/A	N/A	13'- 8"	17'- 0"
33"	1'-11"	4'- 2"	6'- 2"	6'- 5"	7'- 3"	9'- 1"	8'- 6"	8'-10"	10'- 0"	12'- 5"	13'- 3"	13'- 9"	15'- 5"	19'- 2"
36"	2'- 1"	4'- 5"	6'-11"	7'- 3"	8'- 2"	10'- 2"	9'- 6"	9'-11"	11'- 2"	13'-10"	14'- 9"	15'- 3"	17'- 2"	21'- 3"
42"	2'- 4"	4'-11"	8'- 6"	8'-10"	9'-11"	12'- 4"	11'- 7"	12'- 0"	13'- 6"	16'- 8"	17'- 9"	18'- 5"	20'- 8"	25'- 7"
48"	2'- 7"	5'- 5"	10'- 1"	10'- 5"	11'- 9"	N/A	13'- 7"	14'- 2"	15'-10"	N/A	20'- 9"	21'- 6"	24'- 2"	N/A
54"	3'- 0"	5'-11"	11'- 8"	12'- 1"	N/A	N/A	15'- 8"	16'- 3"	N/A	N/A	23'-10"	24'- 8"	N/A	N/A
60"	3'- 3"	6'- 5"	13'- 3"	N/A	N/A	N/A	17'- 9"	N/A	N/A	N/A	26'-10"	N/A	N/A	N/A

TYPICAL PIPE CULVERT MITERS (3)

Side Slope	0° Skew	15° Skew	30° Skew	45° Skew
3:1	3:1	3.106:1	3.464:1	4.243:1
4:1	4:1	4.141:1	4.619:1	5.657:1
6:1	6:1	6.212:1	6.928:1	8.485:1

CONDITIONS WHERE PIPE RUNNERS ARE NOT REQUIRED (2)

Nominal Culvert I.D.	Single Pipe Culvert	Multiple Pipe Culverts
12" thru 21"	Skews thru 45°	Skews thru 45°
24"	Skews thru 45°	Skews thru 30°
27"	Skews thru 30°	Skews thru 15°
30"	Skews thru 15°	Skews thru 15°
33"	Skews thru 15°	Always required
36"	Normal (No Skew)	Always required
42" to 60"	Always required	Always required

STANDARD PIPE SIZES & MAX PIPE RUNNER LENGTHS (1)

Pipe Size	Pipe O.D.	Pipe I.D.	Max Pipe Runner Length
2" STD	2.375"	2.067"	N/A
3" STD	3.500"	3.068"	10'- 0"
4" STD	4.500"	4.026"	19'- 8"
5" STD	5.563"	5.047"	34'- 2"

ESTIMATED CONCRETE RIPRAP QUANTITIES (CY) (5)

Nominal Culvert I.D.	3:1 Side Slope				4:1 Side Slope				6:1 Side Slope			
	0° Skew	15° Skew	30° Skew	45° Skew	0° Skew	15° Skew	30° Skew	45° Skew	0° Skew	15° Skew	30° Skew	45° Skew
12"	0.4	0.4	0.5	0.5	0.5	0.5	0.5	0.6	0.7	0.7	0.7	0.8
15"	0.5	0.5	0.5	0.6	0.6	0.6	0.6	0.7	0.7	0.7	0.8	0.9
18"	0.5	0.5	0.6	0.6	0.6	0.7	0.7	0.8	0.8	0.8	0.9	1.0
21"	0.6	0.6	0.6	0.7	0.7	0.7	0.8	0.9	0.9	0.9	1.0	1.2
24"	0.6	0.7	0.7	0.8	0.8	0.8	0.8	1.0	1.0	1.0	1.1	1.3
27"	0.7	0.7	0.8	0.9	0.8	0.9	0.9	1.1	1.1	1.1	1.2	1.4
30"	0.8	0.8	0.8	0.9	0.9	0.9	1.0	1.2	1.2	1.2	1.3	1.6
33"	0.8	0.8	0.9	1.0	1.0	1.0	1.1	1.3	1.3	1.4	1.5	1.7
36"	0.9	0.9	0.9	1.1	1.1	1.1	1.2	1.4	1.4	1.5	1.6	1.8
42"	1.0	1.0	1.1	1.3	1.2	1.3	1.3	1.6	1.6	1.7	1.8	2.1
48"	1.1	1.1	1.2	N/A	1.4	1.4	1.5	N/A	1.9	1.9	2.1	N/A
54"	1.3	1.3	N/A	N/A	1.6	1.6	N/A	N/A	2.1	2.1	N/A	N/A
60"	1.4	N/A	N/A	N/A	1.7	N/A	N/A	N/A	2.3	N/A	N/A	N/A

"CONSTRUCTION RECORD DRAWINGS_8-01-2009

(1) Size of Pipe Runner shall be as shown in the tables. Cross Pipe shall be the same size as the Pipe Runner. Cross Pipe Stub Out and Bottom Anchor Pipe shall be the next smaller size pipe as shown in the STANDARD PIPE SIZES table.

(2) This standard allows for the placement of only one pipe runner across each culvert pipe opening. In order to limit the clear opening to be traversed by an errant vehicle, the following conditions must be met:

For 60" culvert pipes, the skew must not exceed 0°.
For 54" culvert pipes, the skew must not exceed 15°.
For 48" culvert pipes, the skew must not exceed 30°.
For all culvert pipe sizes 42" and less, the skew must not exceed 45°.

If the above conditions cannot be met, the designer should consider using a safety end treatment with flared wings. For further information, refer to the TxDOT "Roadway Design Manual".

(3) Miter = Slope of Mitered Pipe Culvert End

(4) Riprap placed beyond the limits shown will be paid as Concrete Riprap in accordance with Item 432, "Riprap".

(5) Quantities shown are for one end of one reinforced Concrete Pipe Culvert. For multiple Pipe Culverts or for Corrugated Metal Pipe Culverts, quantities will need to be adjusted. Riprap quantities are for Contractor's information only.

DISCLAIMER:
The use of this standard is governed by the "Texas Engineering Practice Act". No warranty of any kind is made by TxDOT for any purpose whatsoever. TxDOT assumes no responsibility for the conversion of this standard to other formats or for incorrect results or damages resulting from its use.

ACC:
LEVELS DISPLAYED
1

SHEET 1 OF 2

Texas Department of Transportation
Bridge Division

SAFETY END TREATMENT
FOR 12" DIA TO 60" DIA PIPE CULVERTS TYPE II ~ CROSS DRAINAGE

SETP-CD

FILE: setpcdse.dgn	DN: GAF	CK: CAT	DW: JRP	CK: GAF
©TxDOT May 2005	DISTRICT	FEDERAL AID PROJECT		SHEET
REVISIONS				242
	COUNTY	CONTROL	SECT	JOB	HIGHWAY

P-200612-01

DISCLAIMER:
The use of this standard is governed by the "Texas Engineering Practice Act". No warranty of any kind is made by TxDOT for any purpose whatsoever. TxDOT assumes no responsibility for the conversion of this standard to other formats or for incorrect results or damages resulting from its use.

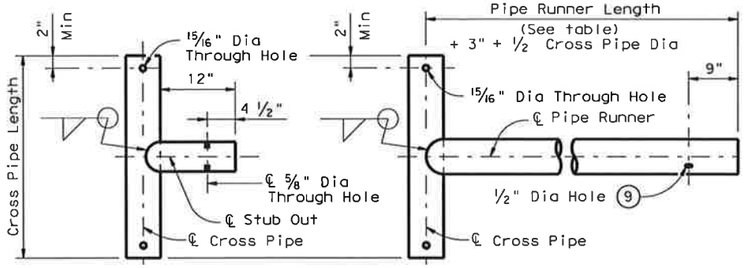

OPTION A1 OPTION A2

CROSS PIPE AND CONNECTIONS DETAILS

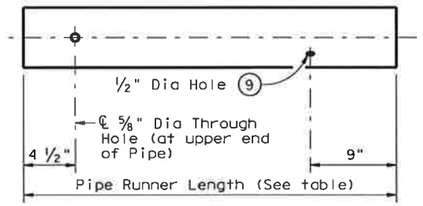

NOTE: The separate Pipe Runner shown is required when Cross Pipe Connection Option A1 is used.

PIPE RUNNER DETAILS

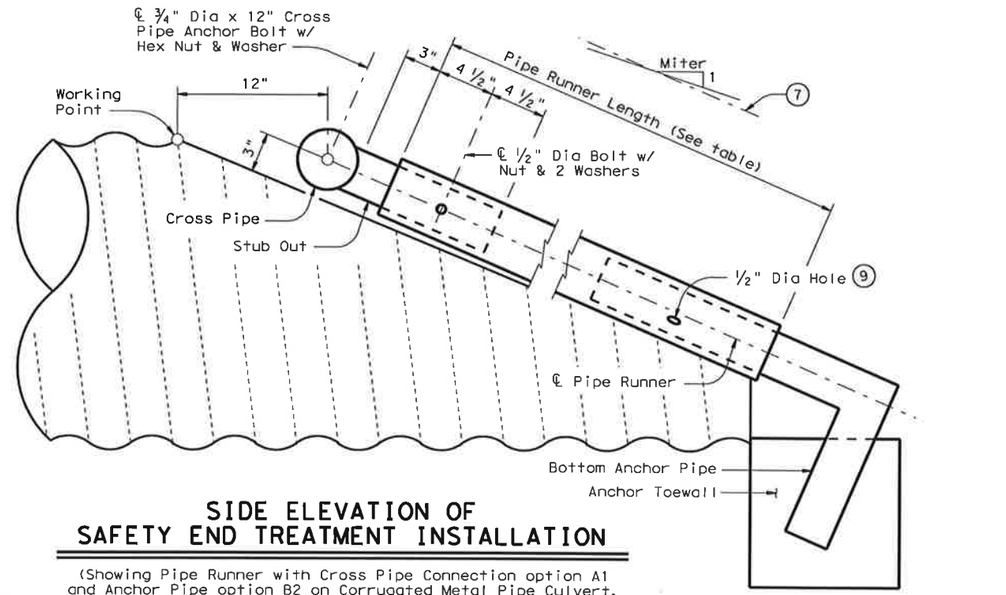

SIDE ELEVATION OF SAFETY END TREATMENT INSTALLATION

(Showing Pipe Runner with Cross Pipe Connection option A1 and Anchor Pipe option B2 on Corrugated Metal Pipe Culvert. Concrete Pipe Culvert details are similar. Riprap not shown for clarity)

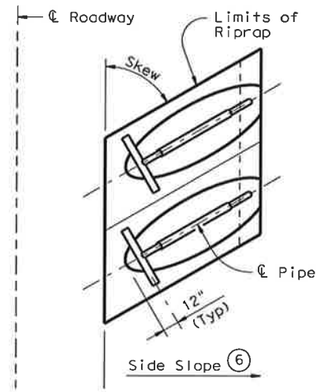

PLAN OF SKEWED INSTALLATION

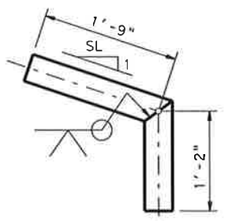

OPTION B1

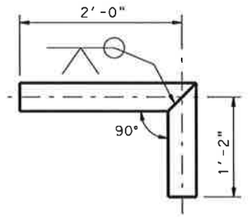

OPTION B2

BOTTOM ANCHOR PIPE DETAILS (10)

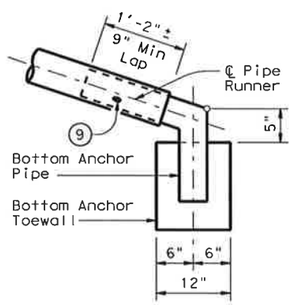

OPTION B1

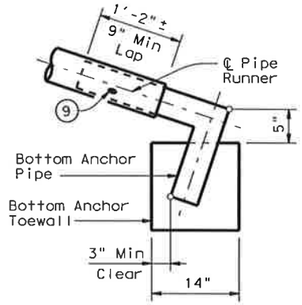

OPTION B2

BOTTOM ANCHOR TOEWALL DETAILS

(Culvert & Riprap not shown for clarity)

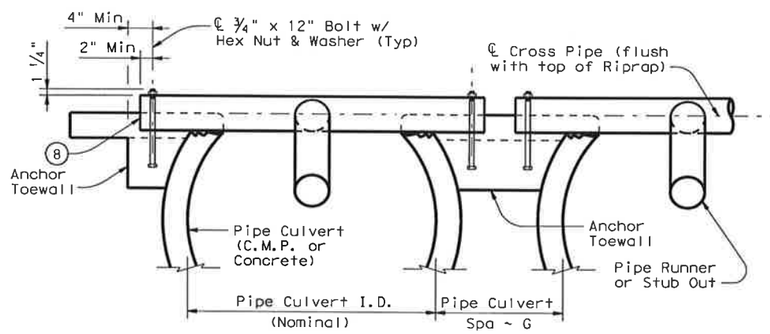

SHOWING CROSS PIPE & ANCHOR TOEWALL

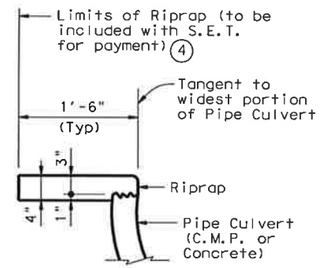

SHOWING TYPICAL PIPE CULVERT & RIPRAP

SECTION A-A

"CONSTRUCTION RECORD DRAWINGS_8-01-2009

(6) Recommended values of side slope are 3:1, 4:1, & 6:1. All quantities, calculations, and dimensions shown herein are based on these recommended values. Slope of 3:1 or flatter is required for vehicle safety.

(7) Note that actual slope of Pipe Runner may vary slightly from Side Slope of Riprap and trimmed Culvert Pipe edge.

(8) Care shall be taken to ensure that Riprap concrete does not flow into the Cross Pipe so as to permit disassembly of the bolted connection to allow cleanout access.

(9) After installation, the 1/2" hole shall be inspected to ensure that the lap of the Pipe Runner with the Bottom Anchor Pipe is adequate.

(10) At fabricator's option, a heat bend to a smooth 5" radius or a manufactured elbow (of the same material as the Runner) may be substituted for the mitered and welded joint in the Bottom Anchor Pipe.

GENERAL NOTES:

Pipe Runners are designed for a traversing load of 1,800 pounds at yield as recommended by Research Report 280-1, "Safety Treatment of Roadside Cross-Drainage Structures", Texas Transportation Institute, March 1981.

The Safety End Treatments shown herein are intended for use in those installations where out of control vehicles are likely to traverse the openings approximately perpendicular to the Pipe Runners.

Riprap and all necessary inverts shall be Concrete Riprap conforming to the requirements of Item 432, "Riprap".

Payment for riprap and toewall is included in the Price Bid for each Safety End Treatment.

Pipe Runners, Cross Pipes, and Anchor Pipes shall conform to the requirements of ASTM A53 (Type E or S, Grade B), ASTM A500 (Grade B), or API 5LX52.

Bolts and nuts shall conform to ASTM A307.

All steel components, except concrete reinforcing, shall be galvanized after fabrication. Galvanizing damaged during transport or construction shall be repaired in accordance with the specifications.

Texas Department of Transportation
Bridge Division

SAFETY END TREATMENT
FOR 12" DIA TO 60" DIA PIPE CULVERTS TYPE II ~ CROSS DRAINAGE

SETP-CD

FILE: setpcdse.dgn	DN: GAF	CK: CAT	DW: JRP	CK: GAF
©TxDOT May 2005	DISTRICT	FEDERAL AID PROJECT		SHEET
REVISIONS				243
	COUNTY	CONTROL	SECT	JOB	HIGHWAY

P-200612-01

ACC:
LEVELS DISPLAYED

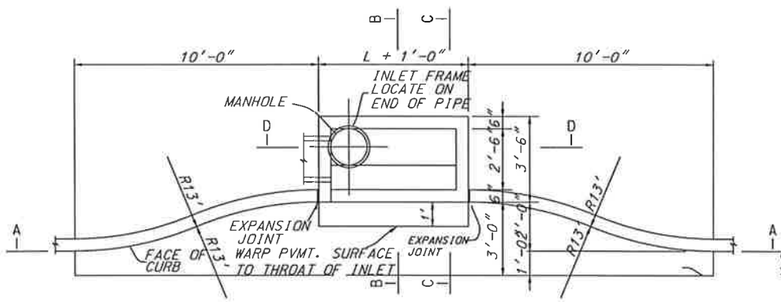

PLAN - RECESSED INLET

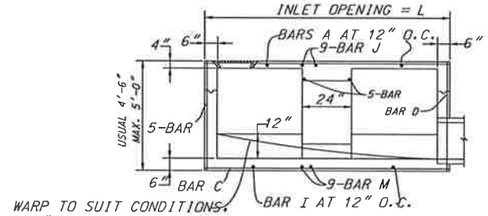

SECTION A-A - STANDARD AND RECESSED INLETS

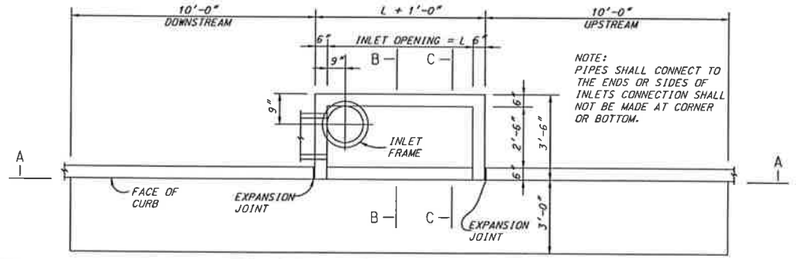

PLAN - STANDARD INLET
8 AND 10 FOOT INLETS

"CONSTRUCTION RECORD DRAWINGS_8-01-2009

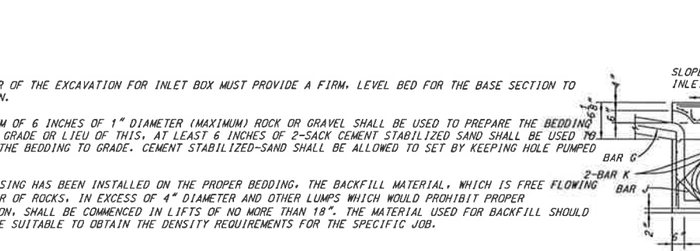

SECTION A-A-RECESSED AND STANDARD INLETS
8 AND 10 FOOT INLETS

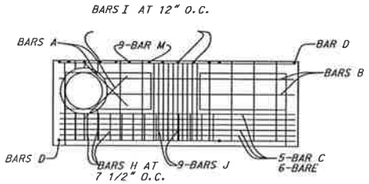

PLAN - STANDARD INLET

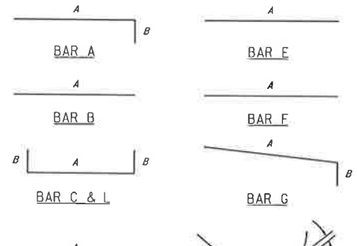

BAR DIAGRAMS

DIMENSIONS SHOWN ARE FOR MAXIMUM SIZE INLETS

INLET LENGTH	BAR TYPE	BAR DIA. (1/8 IN.)	NO. REQ'D	BAR DIMENSIONS A	B	C
4	A	3	6	3'-2"	0'-3"	-
	B	3	1	2'-10"	-	-
	C	4	15	4'-8"	0'-6"	-
	D	4	5	4'-8"	-	-
	F	4	1	3'-2"	-	-
	G	3	5	2'-0"	1'-3"	-
	H	3	6	*	*	*
	N	3	3	3'-2"	3'-2"	3'-2"
6	A	3	9	3'-2"	0'-3"	-
	B	3	1	4'-10"	-	-
	C	4	15	6'-8"	0'-6"	-
	D	4	5	4'-8"	-	-
	F	4	1	3'-2"	-	-
	G	3	5	2'-0"	1'-3"	-
	H	3	9	*	*	*
	N	3	3	3'-2"	3'-2"	3'-2"
8	A	3	12	3'-2"	0'-3"	-
	B	4	1	6'-10"	-	-
	C	4	15	8'-8"	0'-6"	-
	D	4	4	4'-8"	-	-
	F	4	1	3'-2"	-	-
	G	3	5	2'-0'	1'-3"	-
	H	3	12	*	*	*
	N	3	3	3'-2"	3'-2"	3'-2"
10	A	3	13	3'-2"	0'-3"	-
	B	3	2	8'-10"	-	-
	C	4	16	10'-8"	0'-6"	-
	D	4	4	4'-8"	-	-
	E	5	6	10'-8"	-	-
	G	3	5	2'-0"	1'-3"	-
	H	3	14	*	*	*
	I	4	8	4'-8"	3'-2"	3'-2"
	L	4	5	4'-3"	-	-

* SEE DIAGRAM FOR DIMENSIONS. 4', 6', 8' AND 10' INLETS

REINFORCING STEEL SCHEDULE

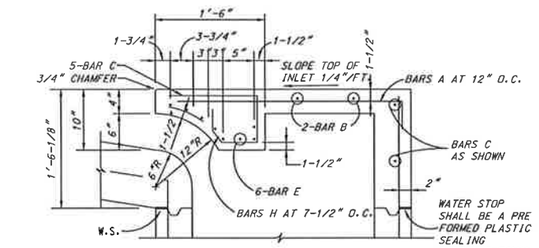

SECTION C-C

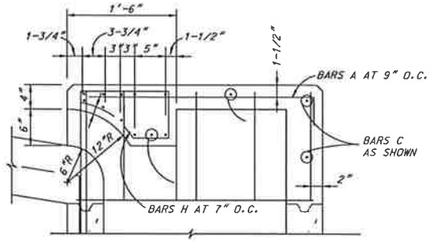

NOTE: FOR ADDITIONAL INFORMATION SEE SECTION C-C

SECTION E-E

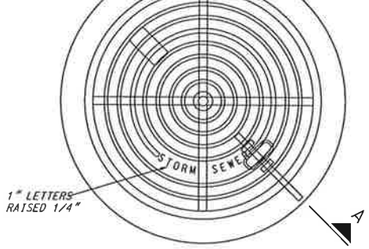

NOTE: MANHOLE COVER TO INCLUDE LOCKING DEVICE

PLAN OF COVER

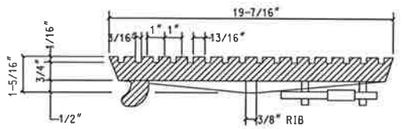

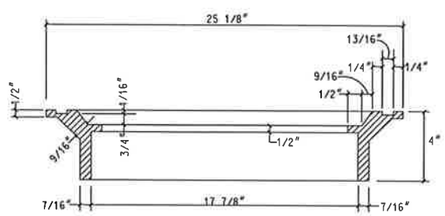

SECTION OF FRAME AND COVER SECTION A-A
INLET FRAME AND COVER

BASS & HAYS COVER 55#, FRAME 45# OR EQUAL

NOTES:

THE FLOOR OF THE EXCAVATION FOR INLET BOX MUST PROVIDE A FIRM, LEVEL BED FOR THE BASE SECTION TO REST UPON.

A MINIMUM OF 6 INCHES OF 1" DIAMETER (MAXIMUM) ROCK OR GRAVEL SHALL BE USED TO PREPARE THE BEDDING TO FINAL GRADE OR LIEU OF THIS, AT LEAST 6 INCHES OF 2-SACK CEMENT STABILIZED SAND SHALL BE USED TO PREPARE THE BEDDING TO GRADE. CEMENT STABILIZED-SAND SHALL BE ALLOWED TO SET BY KEEPING HOLE PUMPED DRY.

AFTER CASING HAS BEEN INSTALLED ON THE PROPER BEDDING, THE BACKFILL MATERIAL, WHICH IS FREE FLOWING AND CLEAR OF ROCKS, IN EXCESS OF 4" DIAMETER AND OTHER LUMPS WHICH WOULD PROHIBIT PROPER COMPACTION, SHALL BE COMMENCED IN LIFTS OF NO MORE THAN 18". THE MATERIAL USED FOR BACKFILL SHOULD BE A TYPE SUITABLE TO OBTAIN THE DENSITY REQUIREMENTS FOR THE SPECIFIC JOB.

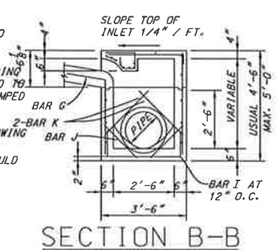

SECTION B-B

INLETS

STANDARD CONSTRUCTION DETAILS

DATE:
DRAWN BY:
APPROVED BY:

SHEET NO. : 244

P-200612-01

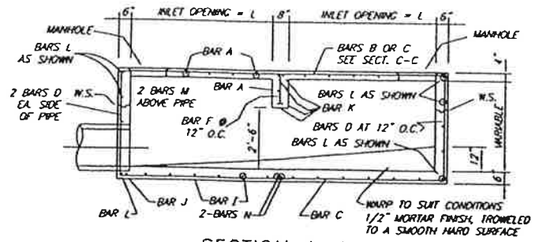

SECTION A–A

12 FOOT INLET

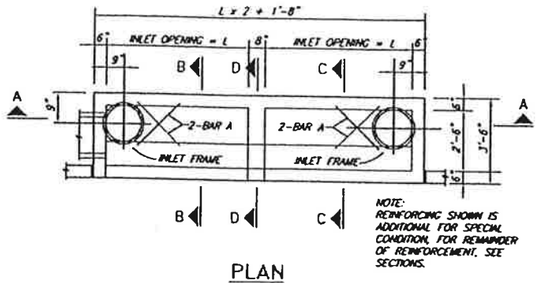

PLAN

12 FOOT INLETS

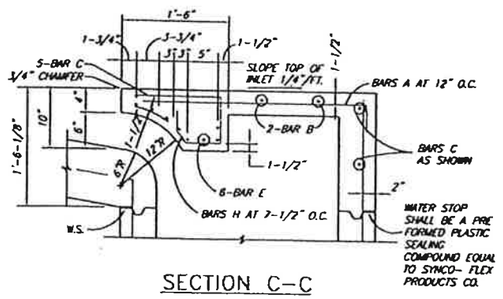

SECTION C–C

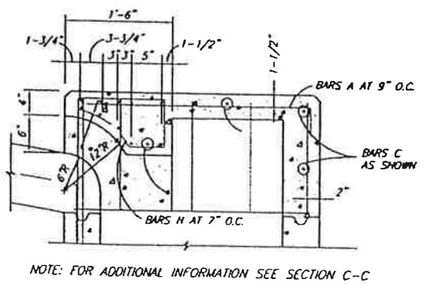

NOTE: FOR ADDITIONAL INFORMATION SEE SECTION C-C

SECTION D–D

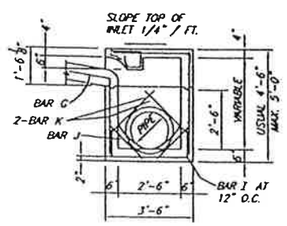

SECTION B–B

DOUBLE INLETS

DIMENSIONS SHOWN ARE FOR MAXIMUM SIZE INLETS

INLET LENGTH	BAR TYPE	BAR DIA. (1/8 IN.)	NO. REQ'D	BAR DIMENSIONS A	B	C
6 FT.	A	3	15	3'-2"	0'-6"	–
	B	3	2	11'-6"	–	–
	C	4	16	13-4"	0'-6"	–
	D	4	9	4'-8"	–	–
	E	5	6	13-4"	–	–
	F	4	5	1'-2"	–	–
	G	3	12	2'-0"	1'-3"	–
	H	3	26	*	*	*
	I	4	12	4'-8"	3'-2"	3'-2"
	J	5	1	*	*	*
	K	5	6	3'-2"	0'-6"	–
	L	4	11	3'-2"	0'-6"	–
	M	4	2	3'-0" **	–	–
	N	4	2	4'-8"	3'-2"	4'-8"

* SEE DIAGRAM FOR DIMENSIONS.
** FIELD CUT AS REQUIRED TO ACCOMODATE DRAIN PIPE.

REINFORCING STEEL SCHEDULE

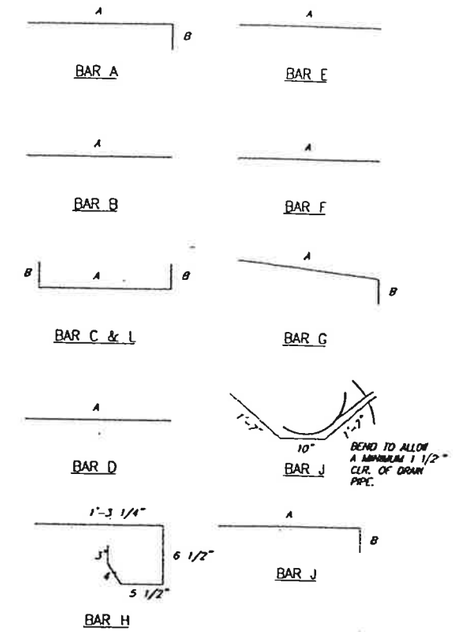

Δ BEND TO ALLOW A MINIMUM 1 1/2" CIR. OF DRAIN PIPE
* SEE DIAGRAMS FOR DIMENSIONS
** FIELD CUT AS REQUIRED TO ACCOMODATE DRAIN PIPE

BAR BENDING DIAGRAMS

INLETS

STANDARD CONSTRUCTION DETAILS

DATE:
DRAWN BY:
APPROVED BY:

SHEET NO. : 245

"CONSTRUCTION RECORD DRAWINGS_8-01-2009

P-200612-01

DISCLAIMER
The use of this standard is governed by the "Texas Engineering Practice Act". No warranty of any kind is made by NTTA for any purpose whatsoever. NTTA assumes no responsibility for the conversion of this standard to other formats or for incorrect results or damages resulting from its use.

01-AUG-2005

G:\Engr\System\NTTA_Standards\NTTA-DRA-001.dgn

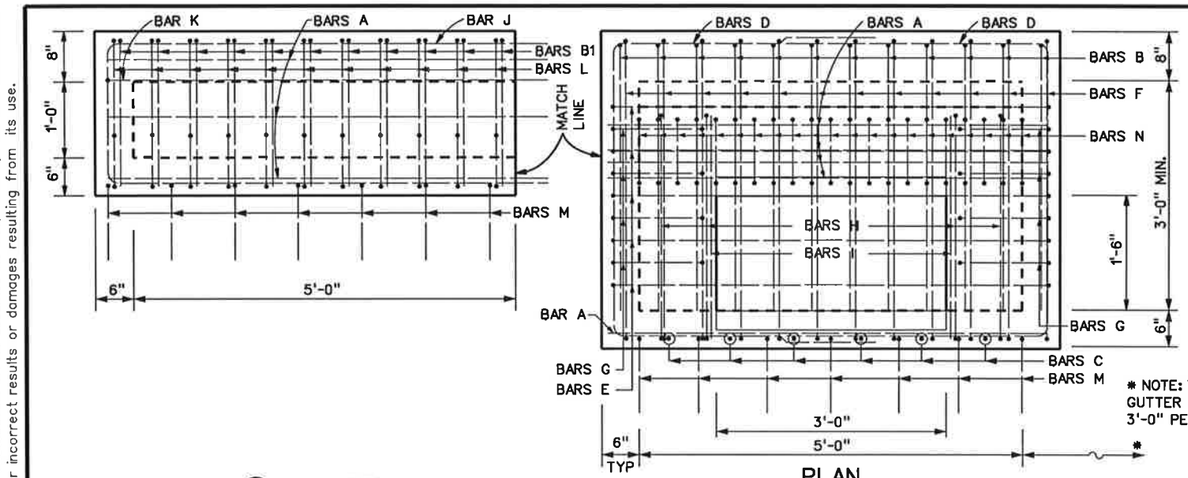

* NOTE: TRANSITION FOR GUTTER DEPRESSION= 3'-0" PER 1" DEPRESSION.

PLAN

BOLT DOWN GRATE AND SSR/SSB NOT SHOWN FOR CLARITY

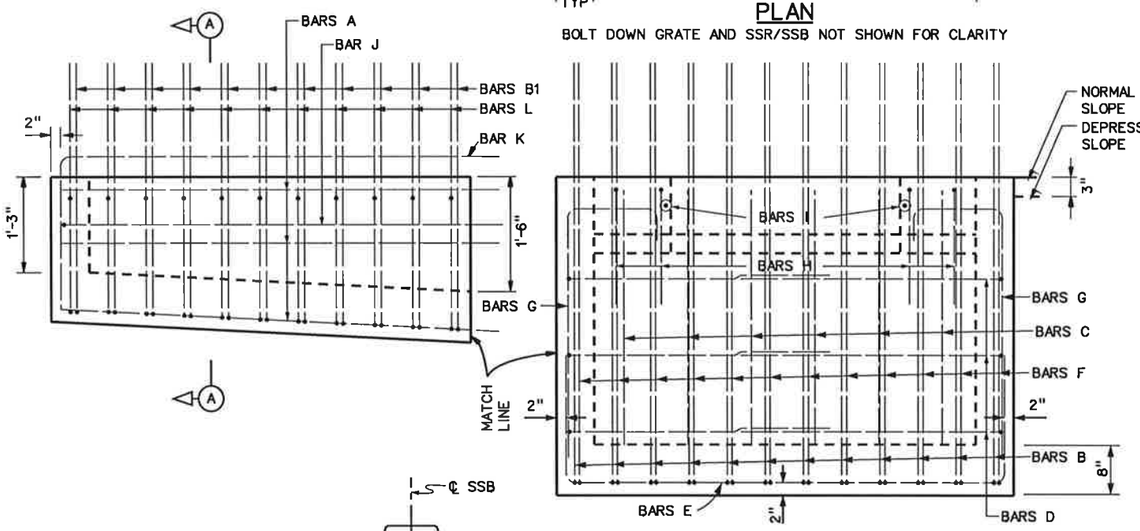

ELEVATION

BOLT DOWN GRATE AND SSR/SSB NOT SHOWN FOR CLARITY

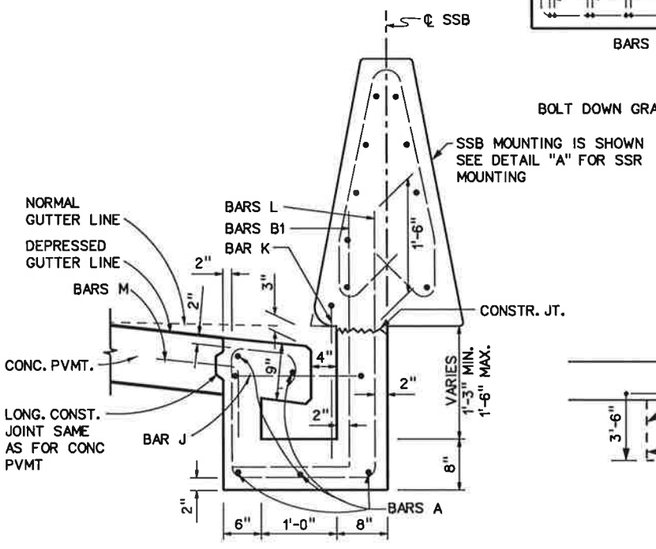

SECTION A-A

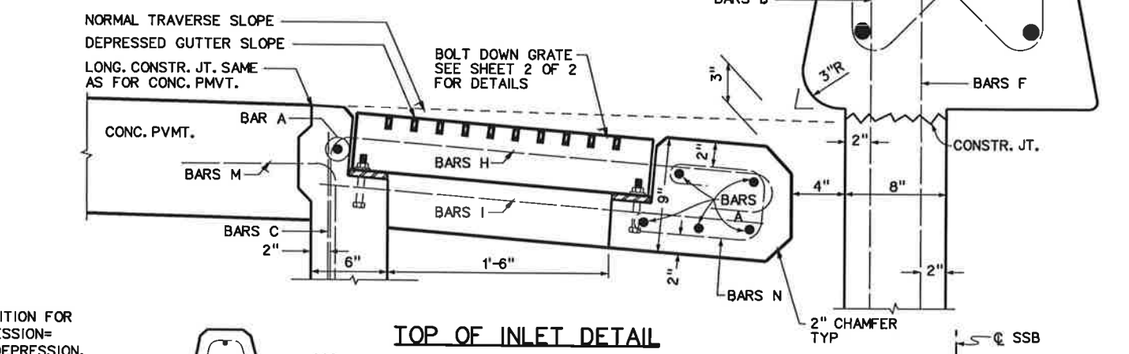

TOP OF INLET DETAIL

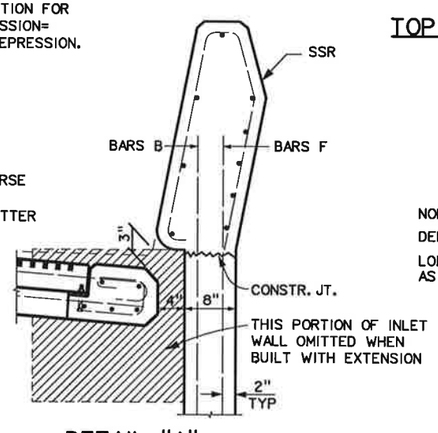

DETAIL "A"
SSR MOUNTING

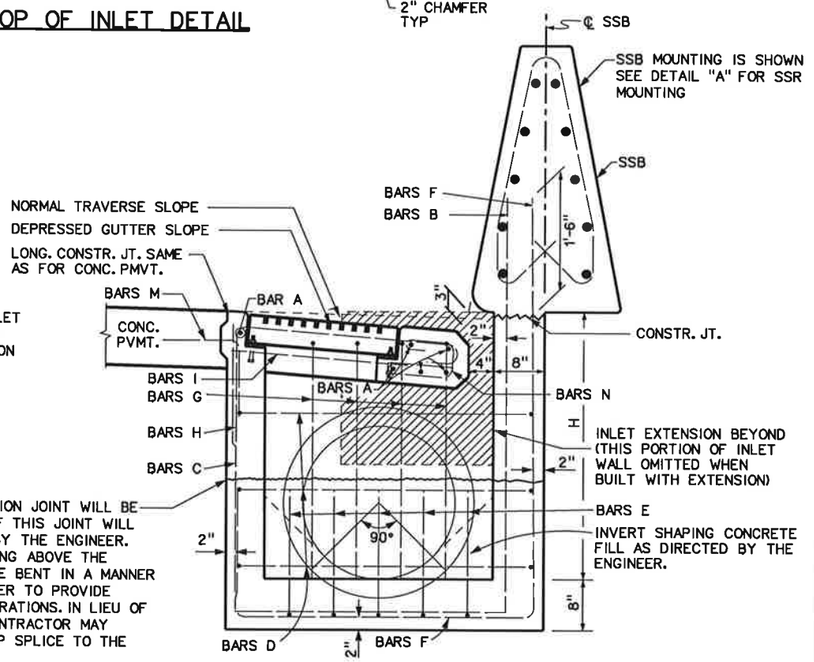

SIDE VIEW
TYPE SS MOUNTING

ONE HORIZONTAL CONSTRUCTION JOINT WILL BE PERMITTED. THE LOCATION OF THIS JOINT WILL BE SUBJECT TO APPROVAL BY THE ENGINEER. REINFORCING STEEL EXTENDING ABOVE THE CONSTRUCTION JOINT MAY BE BENT IN A MANNER ACCEPTABLE TO THE ENGINEER TO PROVIDE CLEARANCE FOR PAVING OPERATIONS. IN LIEU OF BENDING THE STEEL, THE CONTRACTOR MAY PROVIDE A MINIMUM 1'-0" LAP SPLICE TO THE LOWER STEEL.

"CONSTRUCTION RECORD DRAWINGS 8-01-2009

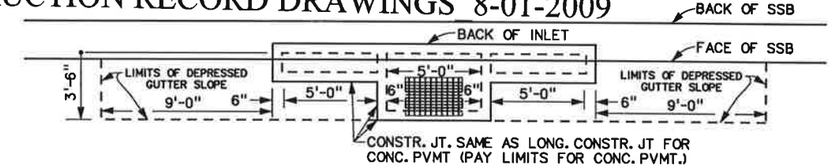

15' INLET

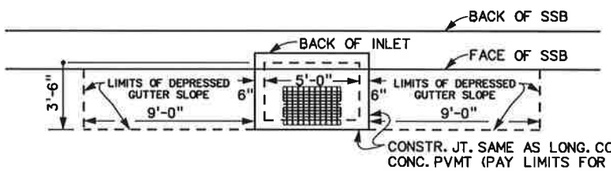

5' INLET

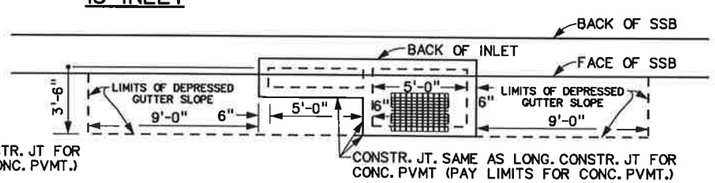

10' INLET

PLAN OF INLET AND EXTENSIONS

(SINGLE SLOPE RAIL NOT SHOWN)

NO.	DATE	REVISION	BY	APPROV.

NTTA
NORTH TEXAS TOLLWAY AUTHORITY

CURB AND GRATE INLET
TYPE SS

DRA-001(1)-2004

DRAWN GEC	DATE 07-27-04	DESIGNED JLE	DATE 07-27-04
CHECKED GEC	DATE 07-27-04	SCALE NTS	

CONTRACT NO. _____ SHEET 246 OF 276

SHEET 1 OF 2

P-200612-01

DISCLAIMER
The use of this standard is governed by the "Texas Engineering Practice Act". No warranty of any kind is made by NTTA for any purpose whatsoever. NTTA assumes no responsibility for the conversion of this standard to other formats or for incorrect results or damages resulting from its use.
01-AUG-2005
G:\Engr\System\NTTA_Standards\NTTA-DRA-001.dgn

REINFORCING STEEL AND CONCRETE FOR 5' INLET

INLET SIZE		BAR "A"						BAR "B"						BAR "C"					
HEIGHT FT	WIDTH FT	NO	SIZE	TY	SPACING	LENGTH	WT	NO	SIZE	TY	SPACING	LENGTH	WT	NO	SIZE	TY	SPACING	LENGTH	WT
2.5	3'-0"	6	#6	ST	AS SHOWN	5'-9"	52	12	#5	BT	6" C-C	8'-0"	100	6	#4	ST	10" C-C	2'-10"	11
3.0	3'-0"	6	#6	ST	AS SHOWN	5'-9"	52	12	#5	BT	6" C-C	8'-6"	106	6	#4	ST	10" C-C	3'-4"	13
3.5	3'-0"	6	#6	ST	AS SHOWN	5'-9"	52	12	#5	BT	6" C-C	9'-0"	113	6	#4	ST	10" C-C	3'-10"	15
4.0	3'-0"	6	#6	ST	AS SHOWN	5'-9"	52	12	#5	BT	6" C-C	9'-6"	119	6	#4	ST	10" C-C	4-4"	17
4.5	3'-0"	6	#6	ST	AS SHOWN	5'-9"	52	12	#5	BT	6" C-C	10-0"	125	6	#4	ST	10" C-C	4'-10"	19
5.0	3'-0"	6	#6	ST	AS SHOWN	5'-9"	52	12	#5	BT	6" C-C	10'-6"	131	6	#4	ST	10" C-C	5'-4"	21
5.5	3'-0"	6	#6	ST	AS SHOWN	5'-9"	52	12	#5	BT	6" C-C	11'-0"	138	6	#4	ST	10" C-C	5'-10"	23
6.0	3'-0"	6	#6	ST	AS SHOWN	5'-9"	52	12	#5	BT	6" C-C	11'-6"	144	6	#4	ST	10" C-C	6'-4"	25
7.0	3'-0"	6	#6	ST	AS SHOWN	5'-9"	52	12	#5	BT	6" C-C	12'-6"	156	6	#4	ST	10" C-C	7'-4"	29
8.0	3'-0"	6	#6	ST	AS SHOWN	5'-9"	52	12	#5	BT	6" C-C	13'-6"	169	6	#4	ST	10" C-C	8'-4"	33
9.0	3'-0"	6	#6	ST	AS SHOWN	5'-9"	52	12	#5	BT	6" C-C	14'-6"	181	6	#4	ST	10" C-C	9'-4"	37
10.0	3'-0"	6	#6	ST	AS SHOWN	5'-9"	52	12	#5	BT	6" C-C	15'-6"	194	6	#4	ST	10" C-C	10'-4"	41

INLET SIZE		BAR "D"						BAR "E"						BAR "F"						BAR "G"					
HEIGHT FT	WIDTH FT	NO	SIZE	TY	SPACING	LENGTH	WT	NO	SIZE	TY	SPACING	LENGTH	WT	NO	SIZE	TY	SPACING	LENGTH	WT	NO	SIZE	TY	SPACING	LENGTH	WT
2.5	3'-0"	4	#4	BT	12" C-C	10'-8"	28	5	#4	BT	7" C-C	9'-1"	30	12	#5	BT	6" C-C	10'-0"	125	8	#4	BT	7" C-C	3'-10"	20
3.0	3'-0"	6	#4	BT	12" C-C	10'-8"	43	5	#4	BT	7" C-C	9'-1"	30	12	#5	BT	6" C-C	10'-6"	131	8	#4	BT	7" C-C	4'-4"	23
3.5	3'-0"	6	#4	BT	12" C-C	10'-8"	43	5	#4	BT	7" C-C	9'-1"	30	12	#5	BT	6" C-C	11'-0"	138	8	#4	BT	7" C-C	4'-10"	26
4.0	3'-0"	8	#4	BT	12" C-C	10'-8"	57	5	#4	BT	7" C-C	9'-1"	30	12	#5	BT	6" C-C	11'-6"	144	8	#4	BT	7" C-C	5'-4"	29
4.5	3'-0"	8	#4	BT	12" C-C	10'-8"	57	5	#4	BT	7" C-C	9'-1"	30	12	#5	BT	6" C-C	12'-0"	150	8	#4	BT	7" C-C	5'-10"	31
5.0	3'-0"	10	#4	BT	12" C-C	10'-8"	71	5	#4	BT	7" C-C	9'-1"	30	12	#5	BT	6" C-C	12'-6"	156	8	#4	BT	7" C-C	6'-4"	34
5.5	3'-0"	10	#4	BT	12" C-C	10'-8"	71	5	#4	BT	7" C-C	9'-1"	30	12	#5	BT	6" C-C	13'-0"	163	8	#4	BT	7" C-C	6'-10"	37
6.0	3'-0"	12	#4	BT	12" C-C	10'-8"	86	5	#4	BT	7" C-C	9'-1"	30	12	#5	BT	6" C-C	13'-6"	169	8	#4	BT	7" C-C	7'-4"	39
7.0	3'-0"	14	#4	BT	12" C-C	10'-8"	100	5	#4	BT	7" C-C	9'-1"	30	12	#5	BT	6" C-C	14'-6"	181	8	#4	BT	7" C-C	8'-4"	45
8.0	3'-0"	16	#4	BT	12" C-C	10'-8"	114	5	#4	BT	7" C-C	9'-1"	30	12	#5	BT	6" C-C	15'-6"	194	8	#4	BT	7" C-C	9'-4"	50
9.0	3'-0"	18	#4	BT	12" C-C	10'-8"	128	5	#4	BT	7" C-C	9'-1"	30	12	#5	BT	6" C-C	16'-6"	206	8	#4	BT	7" C-C	10'-4"	55
10.0	3'-0"	20	#4	BT	12" C-C	10'-8"	143	5	#4	BT	7" C-C	9'-1"	30	12	#5	BT	6" C-C	17'-6"	219	8	#4	BT	7" C-C	11'-4"	61

INLET SIZE		BAR "H"						BAR "I"						BAR "M"						BAR "N"						TOTALS	
HEIGHT FT	WIDTH FT	NO	SIZE	TY	SPACING	LENGTH	WT	NO	SIZE	TY	SPACING	LENGTH	WT	NO	SIZE	TY	SPACING	LENGTH	WT	NO	SIZE	TY	SPACING	LENGTH	WT	STEEL LBS	CONC CY
2.5	3'-0"	4	#4	BT	AS SHOWN	5'-0"	13	2	#4	ST	AS SHOWN	2'-11"	4	7	#4	BT	10" C-C	2'-0"	9	21	#4	BT	3" C-C	2'-7"	36	429	1.63
3.0	3'-0"	4	#4	BT	AS SHOWN	5'-0"	13	2	#4	ST	AS SHOWN	2'-11"	4	7	#4	BT	10" C-C	2'-0"	9	21	#4	BT	3" C-C	2'-7"	36	461	1.80
3.5	3'-0"	4	#4	BT	AS SHOWN	5'-0"	13	2	#4	ST	AS SHOWN	2'-11"	4	7	#4	BT	10" C-C	2'-0"	9	21	#4	BT	3" C-C	2'-7"	36	479	1.96
4.0	3'-0"	4	#4	BT	AS SHOWN	5'-0"	13	2	#4	ST	AS SHOWN	2'-11"	4	7	#4	BT	10" C-C	2'-0"	9	21	#4	BT	3" C-C	2'-7"	36	510	2.13
4.5	3'-0"	4	#4	BT	AS SHOWN	5'-0"	13	2	#4	ST	AS SHOWN	2'-11"	4	7	#4	BT	10" C-C	2'-0"	9	21	#4	BT	3" C-C	2'-7"	36	526	2.30
5.0	3'-0"	4	#4	BT	AS SHOWN	5'-0"	13	2	#4	ST	AS SHOWN	2'-11"	4	7	#4	BT	10" C-C	2'-0"	9	21	#4	BT	3" C-C	2'-7"	36	557	2.47
5.5	3'-0"	4	#4	BT	AS SHOWN	5'-0"	13	2	#4	ST	AS SHOWN	2'-11"	4	7	#4	BT	10" C-C	2'-0"	9	21	#4	BT	3" C-C	2'-7"	36	576	2.63
6.0	3'-0"	4	#4	BT	AS SHOWN	5'-0"	13	2	#4	ST	AS SHOWN	2'-11"	4	7	#4	BT	10" C-C	2'-0"	9	21	#4	BT	3" C-C	2'-7"	36	607	2.80
7.0	3'-0"	4	#4	BT	AS SHOWN	5'-0"	13	2	#4	ST	AS SHOWN	2'-11"	4	7	#4	BT	10" C-C	2'-0"	9	21	#4	BT	3" C-C	2'-7"	36	655	3.13
8.0	3'-0"	4	#4	BT	AS SHOWN	5'-0"	13	2	#4	ST	AS SHOWN	2'-11"	4	7	#4	BT	10" C-C	2'-0"	9	21	#4	BT	3" C-C	2'-7"	36	704	3.47
9.0	3'-0"	4	#4	BT	AS SHOWN	5'-0"	13	2	#4	ST	AS SHOWN	2'-11"	4	7	#4	BT	10" C-C	2'-0"	9	21	#4	BT	3" C-C	2'-7"	36	751	3.80
10.0	3'-0"	4	#4	BT	AS SHOWN	5'-0"	13	2	#4	ST	AS SHOWN	2'-11"	4	7	#4	BT	10" C-C	2'-0"	9	21	#4	BT	3" C-C	2'-7"	36	802	4.14

SECTION A-A

BOLT DOWN GRATE DETAIL

REINFORCING STEEL AND CONCRETE FOR ONE 5' EXT.

BAR	NO	SIZE	TY	SPACING	LENGTH	WEIGHT
A	5	#6	ST	AS SHOWN	5'-9"	43
B1	11	#5	ST	6" C-C	4'-9" TO 5'-0"	56
J	1	#4	BT	AS SHOWN	13'-4"	9
K	1	#4	BT	AS SHOWN	7'-9"	5
L	11	#5	BT	6" C-C	7'-10" TO 8'-4"	91
M	7	#4	BT	10" C-C	2'-0"	9
TOTAL REINFORCING STEEL (LBS)						213
TOTAL CONCRETE (CY)						0.62

CONCRETE TO BE DEDUCTED FOR PIPES (ONE PIPE)

PIPE SIZE	CONC. C.Y.
15"	0.04
18"	0.05
21"	0.07
24"	0.09
27"	0.11
30"	0.14
36"	0.20

STRUCTURAL STEEL FOR 3' x 2' BOLT DOWN GRATE

BAR	NO	SPACING	LENGTH	WEIGHT
3"x½" SIDERAIL	2	AS SHOWN	3'-0"	31
4½"x½" BEARING BAR	10	AS SHOWN	1'-11¾"	152
1"x⅜" STRINGER BAR	10	AS SHOWN	2'-11¾"	38
TOTAL STRUCTURAL STEEL (LBS)				221

GENERAL NOTES
1. ALL CONCRETE SHALL BE CLASS "A" AND CONFORM TO ITEM 421 "HYDRAULIC CEMENT CONCRETE".
2. REINFORCING BARS SHALL BE GRADE 60 AND CONFORM TO ASTM A615. ALL REINFORCING SHALL CONFORM TO ITEM 440 "REINFORCING STEEL".
3. DIMENSIONS RELATING TO REINFORCING STEEL ARE TO THE CENTER OF THE BARS.
4. ALL EXPOSED CORNERS SHALL BE CHAMFERED ¾".
5. BAR DETAILS SHALL BE ADJUSTED AS NECESSARY TO ACCOMMODATE A HORIZONTAL CONSTRUCTION JOINT IF USED. REINFORCING STEEL QUANTITIES SHOWN DO NOT INCLUDE LAP STEEL REQUIRED FOR CONSTRUCTION JOINTS.
6. ALL STRUCTURAL STEEL SHALL CONFORM TO ASTM A 36.
7. INLET STEPS SPACED 10" C.C. AND LOCATED AS DIRECTED BY THE ENGINEER, SHALL BE PROVIDED AND INSTALLED IN ALL INLETS WHERE THE DEPTH EXCEEDS 5'-0".
8. TOTAL QUANTITIES SHOWN FOR CONCRETE AND REINFORCING ARE APPROXIMATE AND ARE PLACED HERE FOR INFORMATIONAL PURPOSES ONLY.
9. PAYMENT OF CURB & GRATE INLETS AND EXTENSIONS THERETO AS SHOWN ON THE PLANS WILL BE PAID FOR UNDER ITEM 465 "INLET (COMPL) (CGI) (TY SS) AND "INLET EXT (TY SS)".

NO.	DATE	REVISION	BY	APPROV.

NORTH TEXAS TOLLWAY AUTHORITY

CURB AND GRATE INLET
TYPE SS

DRA-001(2)-2005

DRAWN GEC DATE 8-01-05 DESIGNED JLE DATE 8-01-05
CHECKED GEC DATE 8-01-05 SCALE NTS

"CONSTRUCTION RECORD DRAWINGS_8-01-2009

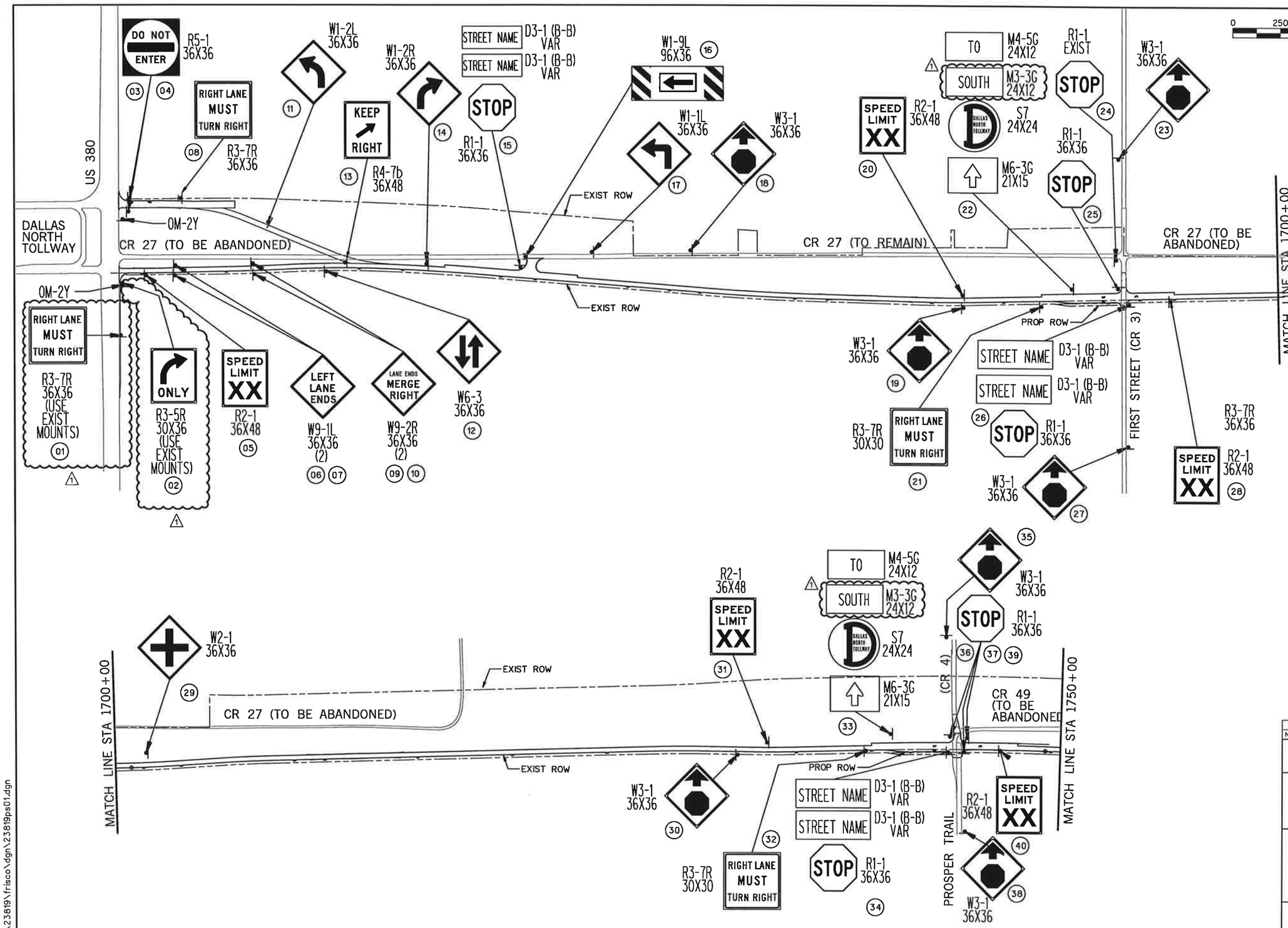

TRAFFIC SIGN NOTES

I. TRAFFIC SIGNS (EXCEPT FOR STREET NAME SIGNS) SHALL BE FABRICATED IN ALUMINUM ACCORDING TO TXDOT REQUIREMENTS AS SHOWN IN THE TEXAS DEPARTMENT OF TRANSPORTATION STANDARD SPECIFICATIONS, THE TEXAS MANUAL OF UNIFORM TRAFFIC CONTROL DEVICES (TMUTCD) AND ANY PROVISIONS CONTAINED IN THESE PLANS, PROPOSAL AND OTHER CONTRACT DOCUMENTS.

II. STREET NAME SIGNS WITHIN THE TOWN OF PROSPER SHALL BE FABRICATED IN ALUMINUM BY BRANDON INDUSTRIES OF MCKINNEY, TX OR APPROVED EQUAL PER TOWN OF PROSPER STANDARDS. STREET NAME SIGNS OUTSIDE THE TOWN OF PROSPER SHALL BE FABRICATED ACCORDING TO REQUIREMENTS SPECIFIED BY THE COLLIN COUNTY DEPARTMENT OF PUBLIC WORKS AND CITY OF CELINA, DEPENDING ON LOCATION.

III. ALL TRAFFIC SIGNS SHALL BE INSTALLED PER CURRENT TXDOT STANDARDS.

IV. THE PERMANENT TRAFFIC SIGN LOCATIONS SHOWN ON THESE PLANS ARE APPROXIMATE. THE EXACT LOCATIONS SHALL BE APPROVED IN THE FIELD BY THE ENGINEER AND SHALL CONFORM TO THE ADVANCE POSTING DISTANCES, SPACING AND VISIBILITY REQUIREMENTS SHOWN IN THE TMUTCD.

V. ROUTE MARKERS FOR THE DALLAS NORTH TOLLWAY SHALL BE PROVIDED BY NTTA AND INSTALLED BY THE CONTRACTOR AS PART OF THIS PROJECT.

VI. THE SPEED LIMIT FOR DALLAS PARKWAY SHALL BE DETERMINED BY COLLIN COUNTY DEPARTMENT OF PUBLIC WORKS AND PROVIDED TO THE CONTRACTOR.

VII. SEE PAVING PLANS FOR THE PROPOSED PAVEMENT MARKINGS AND ADDITIONAL OBJECT MARKERS AT MBGF LOCATIONS.

STATE OF TEXAS
GARY B. SAVANYU
84411
LICENSED PROFESSIONAL ENGINEER
03/30/2007

NO.	DATE	REVISION	APPROV.
1	3/30/07	TxDOT DRIVEWAY PERMIT - C.O. #1	SAVANYU

DALLAS PARKWAY EXTENSION

COLLIN COUNTY

TRAFFIC SIGNS LAYOUT

1 OF 3

Halff Associates, Inc.
ENGINEERS · ARCHITECTS · SCIENTISTS · PLANNERS · SURVEYORS

DRAWN GBS	DATE DEC 2006	DESIGNED GBS	DATE DEC 2006
CHECKED DDS	DATE	SCALE 1"=500'	

BOND PROJECT NO. 03-13 SHEET 248 OF 271

"CONSTRUCTION RECORD DRAWINGS_8-01-2009

3:31:05 PM
i:\23000s\23819\frisco\dgn\23819ps01.dgn

3/30/2007 3:31:05 PM

P-200612-01

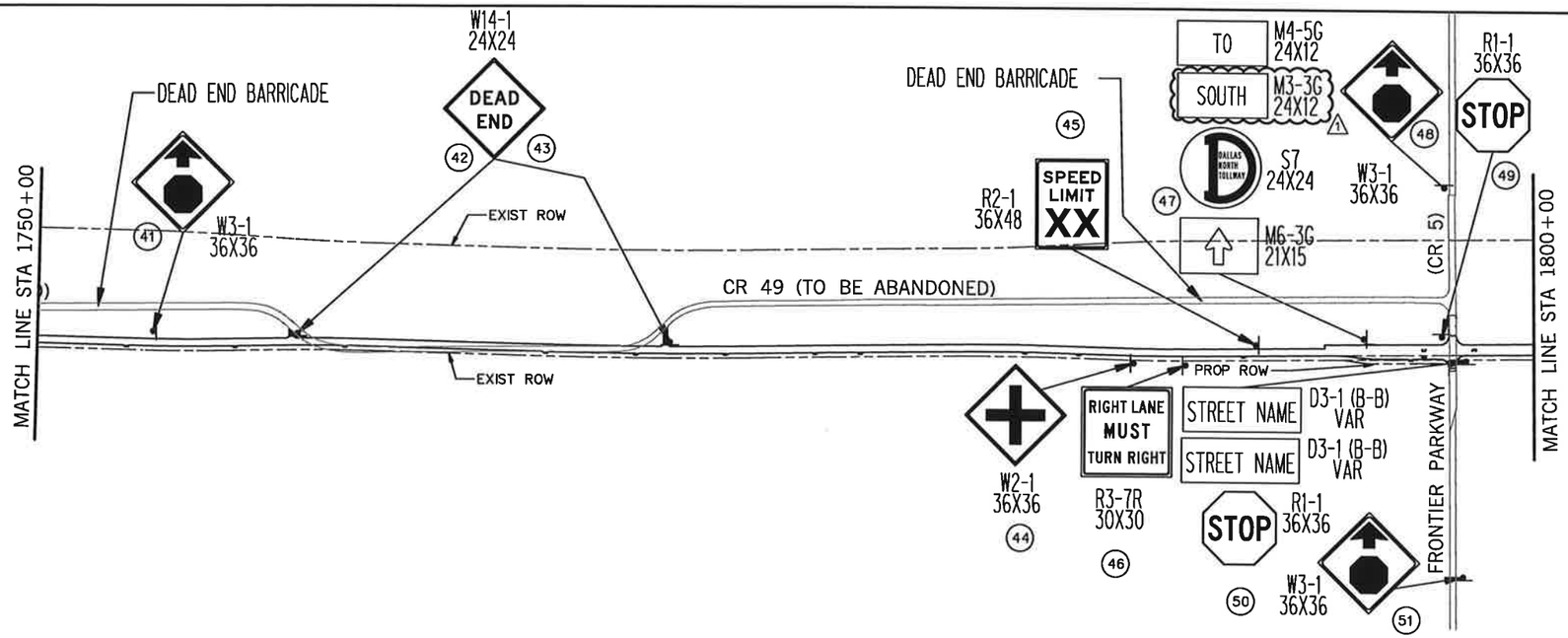

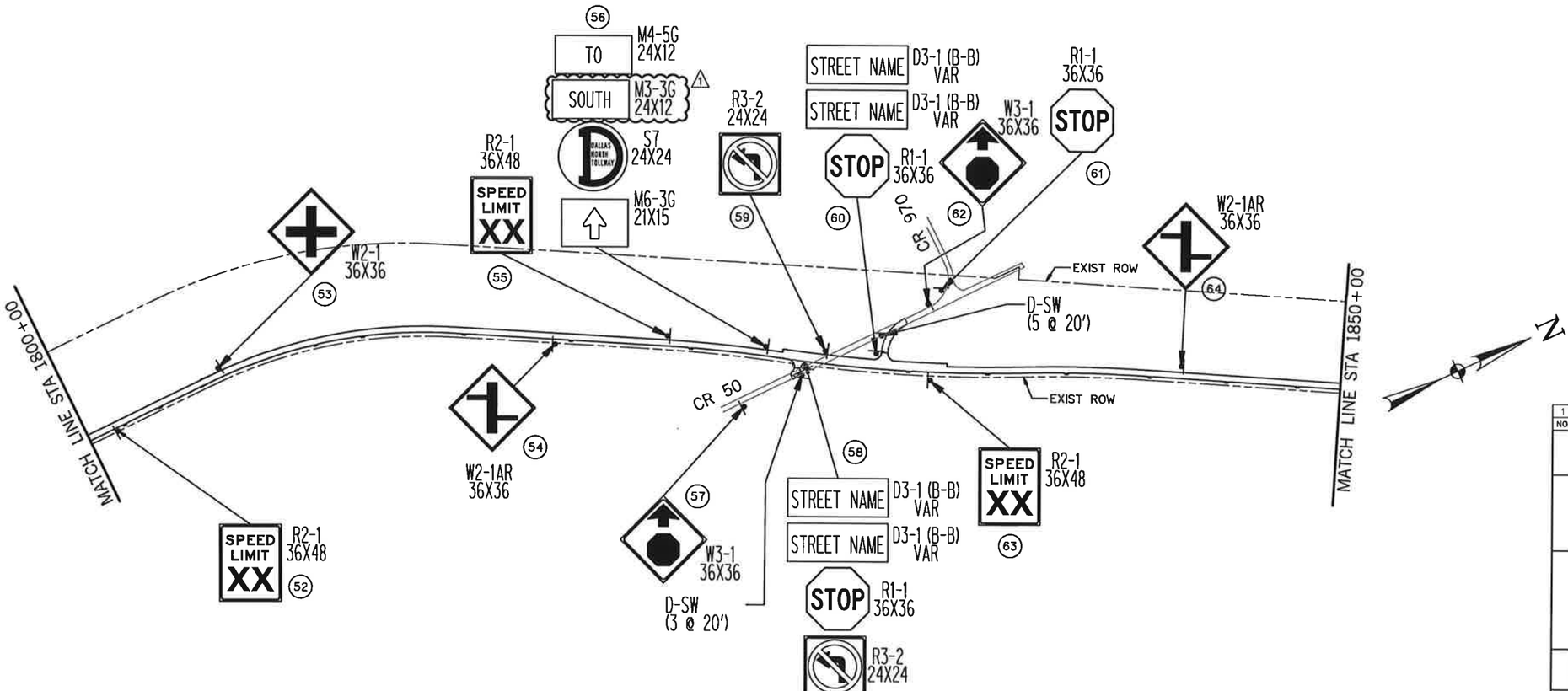

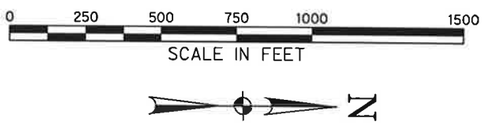

TRAFFIC SIGN NOTES

I. TRAFFIC SIGNS (EXCEPT FOR STREET NAME SIGNS) SHALL BE FABRICATED IN ALUMINUM ACCORDING TO TXDOT REQUIREMENTS AS SHOWN IN THE TEXAS DEPARTMENT OF TRANSPORTATION STANDARD SPECIFICATIONS, THE TEXAS MANUAL OF UNIFORM TRAFFIC CONTROL DEVICES (TMUTCD) AND ANY PROVISIONS CONTAINED IN THESE PLANS, PROPOSAL AND OTHER CONTRACT DOCUMENTS.

II. STREET NAME SIGNS WITHIN THE TOWN OF PROSPER SHALL BE FABRICATED IN ALUMINUM BY BRANDON INDUSTRIES OF MCKINNEY, TX OR APPROVED EQUAL PER TOWN OF PROSPER STANDARDS. STREET NAME SIGNS OUTSIDE THE TOWN OF PROSPER SHALL BE FABRICATED ACCORDING TO REQUIREMENTS SPECIFIED BY THE COLLIN COUNTY DEPARTMENT OF PUBLIC WORKS AND CITY OF CELINA, DEPENDING ON LOCATION.

III. ALL TRAFFIC SIGNS SHALL BE INSTALLED PER CURRENT TXDOT STANDARDS.

IV. THE PERMANENT TRAFFIC SIGN LOCATIONS SHOWN ON THESE PLANS ARE APPROXIMATE. THE EXACT LOCATIONS SHALL BE APPROVED IN THE FIELD BY THE ENGINEER AND SHALL CONFORM TO THE ADVANCE POSTING DISTANCES, SPACING AND VISIBILITY REQUIREMENTS SHOWN IN THE TMUTCD.

V. ROUTE MARKERS FOR THE DALLAS NORTH TOLLWAY SHALL BE PROVIDED BY NTTA AND INSTALLED BY THE CONTRACTOR AS PART OF THIS PROJECT.

VI. THE SPEED LIMIT FOR DALLAS PARKWAY SHALL BE DETERMINED BY COLLIN COUNTY DEPARTMENT OF PUBLIC WORKS AND PROVIDED TO THE CONTRACTOR.

VII. SEE PAVING PLANS FOR THE PROPOSED PAVEMENT MARKINGS AND ADDITIONAL OBJECT MARKERS AT MBGF LOCATIONS.

NO.	DATE	REVISION	APPROV.
1	3/30/07	TxDOT DRIVEWAY PERMIT - C.O. #1	SAVANYU

DALLAS PARKWAY EXTENSION

COLLIN COUNTY

TRAFFIC SIGNS
LAYOUT

2 OF 3

Halff Associates, Inc.
ENGINEERS · ARCHITECTS · SCIENTISTS · PLANNERS · SURVEYORS

DRAWN GBS	DATE DEC 2006	DESIGNED GBS	DATE DEC 2006
CHECKED DDS	DATE	SCALE 1"=500'	

BOND PROJECT NO. 03-13 SHEET 249 OF 271

3:31:07 PM
i:\23000s\23819\frisco\dgn\23819ps02.dgn

"CONSTRUCTION RECORD DRAWINGS_8-01-2009

3/30/2007 3:31:07 PM

P-200612-01

$$$$$$$$$$$$dgnspec$$$$$$$$$$$$$$$$

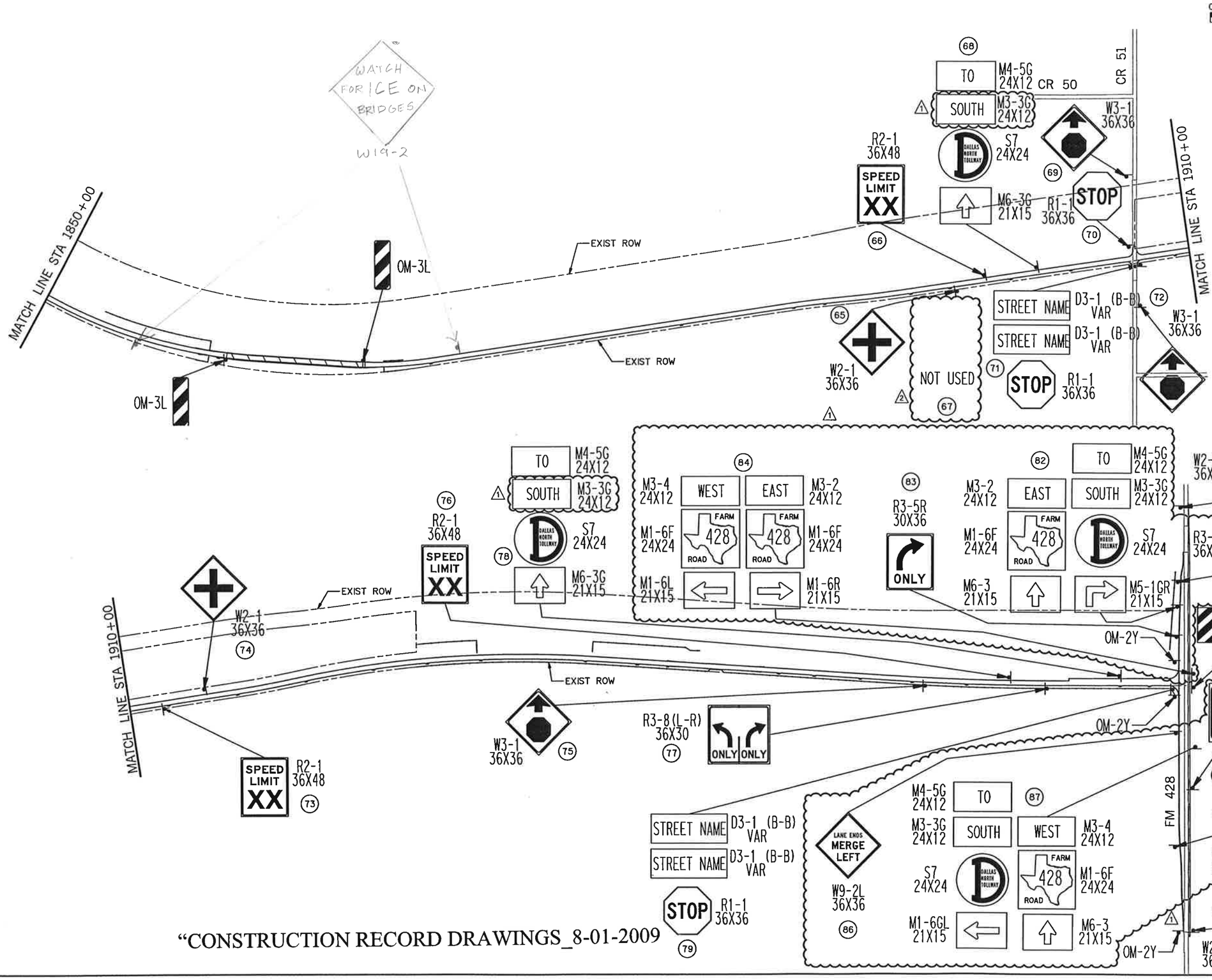

TRAFFIC SIGN NOTES

I. TRAFFIC SIGNS (EXCEPT FOR STREET NAME SIGNS) SHALL BE FABRICATED IN ALUMINUM ACCORDING TO TXDOT REQUIREMENTS AS SHOWN IN THE TEXAS DEPARTMENT OF TRANSPORTATION STANDARD SPECIFICATIONS, THE TEXAS MANUAL OF UNIFORM TRAFFIC CONTROL DEVICES (TMUTCD) AND ANY PROVISIONS CONTAINED IN THESE PLANS, PROPOSAL AND OTHER CONTRACT DOCUMENTS.

II. STREET NAME SIGNS WITHIN THE TOWN OF PROSPER SHALL BE FABRICATED IN ALUMINUM BY BRANDON INDUSTRIES OF MCKINNEY, TX OR APPROVED EQUAL PER TOWN OF PROSPER STANDARDS. STREET NAME SIGNS OUTSIDE THE TOWN OF PROSPER SHALL BE FABRICATED ACCORDING TO REQUIREMENTS SPECIFIED BY THE COLLIN COUNTY DEPARTMENT OF PUBLIC WORKS AND CITY OF CELINA, DEPENDING ON LOCATION.

III. ALL TRAFFIC SIGNS SHALL BE INSTALLED PER CURRENT TXDOT STANDARDS.

IV. THE PERMANENT TRAFFIC SIGN LOCATIONS SHOWN ON THESE PLANS ARE APPROXIMATE. THE EXACT LOCATIONS SHALL BE APPROVED IN THE FIELD BY THE ENGINEER AND SHALL CONFORM TO THE ADVANCE POSTING DISTANCES, SPACING AND VISIBILITY REQUIREMENTS SHOWN IN THE TMUTCD.

V. ROUTE MARKERS FOR THE DALLAS NORTH TOLLWAY SHALL BE PROVIDED BY NTTA AND INSTALLED BY THE CONTRACTOR AS PART OF THIS PROJECT.

VI. THE SPEED LIMIT FOR DALLAS PARKWAY SHALL BE DETERMINED BY COLLIN COUNTY DEPARTMENT OF PUBLIC WORKS AND PROVIDED TO THE CONTRACTOR.

VII. SEE PAVING PLANS FOR THE PROPOSED PAVEMENT MARKINGS AND ADDITIONAL OBJECT MARKERS AT MBGF LOCATIONS.

STATE OF TEXAS
GARY B. SAVANYU
84411
LICENSED PROFESSIONAL ENGINEER
2007/09/27

NO.	DATE	REVISION	APPROV.
2	9/27/07	REVISED PAVING @ CR 51 - C.O. #2	SAVANYU
1	3/30/07	TxDOT DRIVEWAY PERMIT - C.O. #1	SAVANYU

DALLAS PARKWAY EXTENSION

COLLIN COUNTY

TRAFFIC SIGNS
LAYOUT

3 OF 3

Halff Associates, Inc.
ENGINEERS · ARCHITECTS · SCIENTISTS · PLANNERS · SURVEYORS

DRAWN	GBS	DATE DEC 2006	DESIGNED GBS DATE DEC 2006
CHECKED	DDS	DATE	SCALE 1"=500'

BOND PROJECT NO. 03-13 SHEET 260 OF 271

"CONSTRUCTION RECORD DRAWINGS_8-01-2009

$$$$$$$$$$$$sytime$$$$$$
$$$$$$$$$$$$dgnspec$$$$$$$$$$$$$$$$
$$sydate$$ $$$$$$$$sytime$$$$

P-200612-01

SUMMARY OF SMALL SIGNS

SM RD SGN ASSM TY XXXXX(X)XX(X-XXXX)

Post Type: FRP = Fiberglass; TWT = Thin-Wall; 10BWG = 10 BWG; S80 = Sch 80

Posts (1 or 2)

Anchor Type: UA = Univer-Conc; UB = Univer-Bolt; WA = Wedge-Conc; SA = Slip-Conc; SB = Slip-Bolt

Mounting Designation: P = Prefab. "Plain"; T = Prefab. "T"; U = Prefab. "U"

1EXT or 2EXT = # of Ext.; BM = Extruded Wind Beam; WC = 1.12 #/ft Wing Chan.; EXAL = Extruded Alum. signs

PLAN SHEET NO.	SIGN NO.	SIGN NOMENCLATURE	SIGN TEXT	SIGN DIMENSIONS	LEGEND SHEETING	BACKGROUND SHEETING	PLYWOOD TYPE A	ALUMINUM TYPE A	ALUMINUM TYPE G	Post Type	Posts	Anchor Type	Mounting Designation	
1 OF 3	1	R3-7R	RIGHT LANE MUST TURN RIGHT	36X36	C	C		X						USE EXIST MOUNT
	2	R3-5R	RIGHT ONLY	30X36	C	C		X						USE EXIST MOUNT
	3	R5-1	DO NOT ENTER	36X36	C	C		X		TWT	1	UA	P	
	4	R5-1	DO NOT ENTER	36X36	C	C		X		TWT	1	UA	P	
	5	R2-1	SPEED LIMIT XX	36X48	C	C		X		10BWG	1	SA	T	
	6	W9-1L	LEFT LANE ENDS	36X36	C	C		X		TWT	1	UA	P	
	7	W9-1L	LEFT LANE ENDS	36X36	C	C		X		TWT	1	UA	P	
	8	R3-7R	RIGHT LANE MUST TURN RIGHT	36X36	C	C		X		TWT	1	UA	P	
	9	W9-2R	LANE ENDS MERGE RIGHT	36X36	C	C		X		TWT	1	UA	P	
	10	W9-2R	LANE ENDS MERGE RIGHT	36X36	C	C		X		TWT	1	UA	P	
	11	W1-2L	CURVE LEFT	36X36	C	C		X		TWT	1	UA	P	
	12	W6-3	TWO-WAY TRAFFIC	36X36	C	C		X		TWT	1	UA	P	
	13	R4-7b	KEEP RIGHT	36X48	C	C		X		10BWG	1	SA	T	
	14	W1-2R	CURVE RIGHT	36X36	C	C		X		TWT	1	UA	P	
	15	R1-1	STOP	36X36	C	C		X		10BWG	1	SA	T	
		D3-1	STREET NAME	VAR	C	C		X						
		D3-1	STREET NAME	VAR	C	C		X						
	16	W1-9L	ARROW LEFT	96X36	C	C		X		S80	1	SA	U	2EXT
	17	W1-1L	CURVE LEFT	36X36	C	C		X		TWT	1	UA	P	
	18	W3-1	STOP AHEAD	36X36	C	C		X		TWT	1	UA	P	
	19	W2-1	STOP AHEAD	36X36	C	C		X		TWT	1	UA	P	
	20	R2-1	SPEED LIMIT XX	36X48	C	C		X		10BWG	1	SA	T	
	21	R3-7R	RIGHT LANE MUST TURN RIGHT	36X36	C	C		X		TWT	1	UA	P	
	22	M4-5G	TO	24X12	C	C		X		10BWG	1	SA	P	
		M3-3G	SOUTH	24X12	C	C		X						
		S7	DALLAS NORTH TOLLWAY	24X24	C	C		X						
		M6-3G	ARROW STRAIGHT	21X15	C	C		X						
	23	W3-1	STOP AHEAD	36X36	C	C		X		TWT	1	UA	P	
	24	R1-1	STOP	EXIST										
	25	R1-1	STOP	36X36	C	C		X		TWT	1	UA	P	
	26	R1-1	STOP	36X36	C	C		X		10BWG	1	SA	T	
		D3-1	STREET NAME	VAR	C	C		X						
		D3-1	STREET NAME	VAR	C	C		X						
	27	W3-1	STOP AHEAD	36X36	C	C		X		TWT	1	UA	P	
	28	R2-1	SPEED LIMIT XX	36X48	C	C		X		10BWG	1	SA	T	
	29	W2-1	4-WAY INTERSECTION AHEAD	36X36	C	C		X		TWT	1	UA	P	
	30	W3-1	STOP AHEAD	36X36	C	C		X		TWT	1	UA	P	
	31	R2-1	SPEED LIMIT XX	36X48	C	C		X		10BWG	1	SA	T	
	32	R3-7R	RIGHT LANE MUST TURN RIGHT	36X36	C	C		X		TWT	1	UA	P	
	33	M4-5G	TO	24X12	C	C		X		10BWG	1	SA	P	
		M3-3G	SOUTH	24X12	C	C		X						
		S7	DALLAS NORTH TOLLWAY	24X24	C	C		X						
		M6-3G	ARROW STRAIGHT	21X15	C	C		X						
	34	R1-1	STOP	36X36	C	C		X		10BWG	1	SA	T	
		D3-1	STREET NAME	VAR	C	C		X						
		D3-1	STREET NAME	VAR	C	C		X						
	35	W3-1	STOP AHEAD	36X36	C	C		X		TWT	1	UA	P	
	36	R1-1	STOP	36X36	C	C		X		TWT	1	UA	P	
	37	R1-1	STOP	36X36	C	C		X		TWT	1	UA	P	
	38	W3-1	STOP AHEAD	36X36	C	C		X		TWT	1	UA	P	
	39	R1-1	STOP	36X36	C	C		X		TWT	1	UA	P	
2 OF 3	40	R2-1	SPEED LIMIT XX	36X48	C	C		X		10BWG	1	SA	T	
	41	W3-1	STOP AHEAD	36X36	C	C		X		TWT	1	UA	P	
	42	W14-1	DEAD END	24X24	C	C		X		TWT	1	UA	P	
	43	W14-1	DEAD END	24X24	C	C		X		TWT	1	UA	P	
	44	W2-1	4-WAY INTERSECTION AHEAD	36X36	C	C		X		TWT	1	UA	P	
	45	R2-1	SPEED LIMIT XX	36X48	C	C		X		10BWG	1	SA	T	

"CONSTRUCTION RECORD DRAWINGS 8-01-2009

NO.	DATE	REVISION
1	3/30/07	TxDOT DRIVEWAY PERMIT - C.O. #1

3/30/07 APPROV.

DALLAS PARKWAY EXTENSION

TRAFFIC SIGNS

SUMMARY OF SMALL SIGNS 1 OF 3

Halff Associates, Inc.
ENGINEERS · ARCHITECTS · SCIENTISTS · PLANNERS · SURVEYORS

DRAWN GBS DATE DEC 2006
CHECKED DDS DATE
DESIGNED GBS DATE DEC 2006
SCALE

BOND PROJECT NO. 03-13 SHEET 251 OF 271

STATE OF TEXAS · GARY B. SAMMONS · 84411 · LICENSED PROFESSIONAL ENGINEER
03/30/2007

3/30/2007 3:31:01 PM

i:\23000s\23819\frisco\dgn\23819ps04.dgn

SUMMARY OF SMALL SIGNS

SM RD SGN ASSM TY XXXXX(X)XX(X-XXXX)

Post Type: FRP = Fiberglass, TWT = Thin-Wall 10BWG = 10 BWG, SBO = Sch 80
Posts (1 or 2)
Anchor Type: UA = Univer-Cono, UB = Univer-Bolt, WA = Wedge-Conc, SA = Slip-Conc, SB = Slip-Bolt
Mounting Designation: P = Prefab. "Plain", T = Prefab. "T", U = Prefab. "U"; 1EXT or 2EXT = # of Ext., BM = Extruded Wind Beam, WC = 1.12 #/ft Wing Chan., EXAL = Extruded Alum. signs

PLAN SHEET NO.	SIGN NO.	SIGN NOMENCLATURE	SIGN TEXT	SIGN DIMENSIONS	LEGEND SHEETING	BACKGROUND SHEETING	PLYWOOD TYPE A	ALUMINUM TYPE A	ALUMINUM TYPE G	Post Type	Posts	Anchor Type	Mounting Designation
	46	R3-7R	RIGHT LANE MUST TURN RIGHT	36X36	C	C		X		TWT	1	UA	P
	47	M4-5G	TO	24X12	C	C		X		10BWG	1	SA	P
		M3-3G	SOUTH	24X12	C	C		X	1				
		S7	DALLAS NORTH TOLLWAY	24X24	C	C		X					
		M6-3G	ARROW STRAIGHT	21X15	C	C		X					
	48	W3-1	STOP AHEAD	36X36	C	C		X		TWT	1	UA	P
	49	R1-1	STOP	36X36	C	C		X		TWT	1	UA	P
	50	R1-1	STOP	36X36	C	C		X		10BWG	1	SA	T
		D3-1	STREET NAME	VAR	C	C		X					
		D3-1	STREET NAME	VAR	C	C		X					
	51	W3-1	STOP AHEAD	36X36	C	C		X		TWT	1	UA	P
	52	R2-1	SPEED LIMIT XX	36X48	C	C		X		10BWG	1	SA	T
	53	W2-1	4-WAY INTERSECTION AHEAD	36X36	C	C		X		TWT	1	UA	P
	54	W2-1	STAGGERED INTERSECTION AHEAD	36X36	C	C		X		TWT	1	UA	P
	55	R2-1	SPEED LIMIT XX	36X48	C	C		X		10BWG	1	SA	T
	56	M4-5G	TO	24X12	C	C		X		TWT	1	UA	P
		M3-3G	SOUTH	24X12	C	C		X	1				
		S7	DALLAS NORTH TOLLWAY	24X24	C	C		X					
		M6-3G	ARROW STRAIGHT	21X15	C	C		X					
	57	W3-1	STOP AHEAD	36X36	C	C		X		TWT	1	UA	P
	58	R1-1	STOP	36X36	C	C		X		10BWG	1	SA	T
		D3-1	STREET NAME	VAR	C	C		X					
		D3-1	STREET NAME	VAR	C	C		X					
	59	R3-2	NO LEFT TURN	24X24	C	C		X		TWT	1	UA	P
	60	R1-1	STOP	36X36	C	C		X		10BWG	1	SA	P
		D3-1	STREET NAME	VAR	C	C		X					
		D3-1	STREET NAME	VAR	C	C		X					
	61	R1-1	STOP	36X36	C	C		X		TWT	1	UA	P
	62	W3-1	STOP AHEAD	36X36	C	C		X		TWT	1	UA	P
	63	R2-1	SPEED LIMIT XX	36X48	C	C		X		10BWG	1	SA	T
	64	W2-1	STAGGERED INTERSECTION AHEAD	36X36	C	C		X		TWT	1	UA	P
	65	W2-1	4-WAY INTERSECTION AHEAD	36X36	C	C		X		TWT	1	UA	P
	66	R2-1	SPEED LIMIT XX	36X48	C	C		X		10BWG	1	SA	T
	67		NOT USED										2
	68	M4-5G	TO	24X12	C	C		X		10BWG	1	SA	P
		M3-3G	SOUTH	24X12	C	C		X	1				
		S7	DALLAS NORTH TOLLWAY	24X24	C	C		X					
		M6-3G	ARROW STRAIGHT	21X15	C	C		X					
	69	W3-1	STOP AHEAD	36X36	C	C		X		TWT	1	UA	P
	70	R1-1	STOP	36X36	C	C		X		TWT	1	UA	P
	71	R1-1	STOP	36X36	C	C		X		10BWG	1	SA	T
		D3-1	STREET NAME	VAR	C	C		X					
		D3-1	STREET NAME	VAR	C	C		X					
	72	W3-1	STOP AHEAD	36X36	C	C		X		TWT	1	UA	P
	73	R2-1	SPEED LIMIT XX	36X48	C	C		X		10BWG	1	SA	T
	74	W2-1	4-WAY INTERSECTION AHEAD	36X36	C	C		X		TWT	1	UA	P
	75	W3-1	STOP AHEAD	36X36	C	C		X		TWT	1	UA	P
	76	R2-1	SPEED LIMIT XX	36X48	C	C		X		10BWG	1	SA	T
	77	R3-8(L-R)	LEFT ONLY / RIGHT ONLY	36X30	C	C		X		TWT	1	UA	P
	78	M4-5G	TO	24X12	C	C		X		10BWG	1	SA	P
		M3-3G	SOUTH	24X12	C	C		X	1				
		S7	DALLAS NORTH TOLLWAY	24X24	C	C		X					
		M6-3G	ARROW STRAIGHT	21X15	C	C		X					
	79	R1-1	STOP	36X36	C	C		X		10BWG	1	SA	T
		D3-1	STREET NAME	VAR	C	C		X					
		D3-1	STREET NAME	VAR	C	C		X					
	80	W2-2R	RIGHT INTERSECTION AHEAD	36X36	C	C		X		10BWG	1	SA	T
	81	R3-7R	RIGHT LANE MUST TURN RIGHT	36X36	C	C		X		10BWG	1	SA	T
	82	M3-2	EAST	24X12	C	C		X		10BWG	1	SA	U
		M1-6F	FM 428	24X24	C	C		X					
		M6-3	ARROW STRAIGHT	21X15	C	C		X					
		M4-5G	TO	24X12	C	C		X					
		S7	DALLAS NORTH TOLLWAY	24X24	C	C		X					
		M5-1GR	ARROW FAR RIGHT	21X15	C	C		X					4

"CONSTRUCTION RECORD DRAWINGS 8-01-2009

NO.	DATE	REVISION	APPROV.
2	9/27/07	CULVERT END - C.O. #2	SAVANTU
1	3/30/07	TxDOT DRIVEWAY PERMIT - C.O. #1	SAVANTU

DALLAS PARKWAY EXTENSION

TRAFFIC SIGNS
SUMMARY OF SMALL SIGNS 2 OF 3

Halff Associates, Inc.
ENGINEERS · ARCHITECTS · SCIENTISTS · PLANNERS · SURVEYORS

DESIGNED GBS DATE DEC 2006
DRAWN GBS DATE DEC 2006
CHECKED DDS DATE
SCALE

BOND PROJECT NO. 03-13 SHEET 252 OF 271

GARY B. SAVANTU 84471 LICENSED PROFESSIONAL ENGINEER STATE OF TEXAS
2007/09/27

10/9/2007 2:44:06 PM
P-200612-01

i:\23000s\23819\FRISCO\DGN\23819PS05.dgn

SUMMARY OF SMALL SIGNS

SM RD SGN ASSM TY XXXXX(X)XX(X-XXXX)

Post Type: FRP = Fiberglass, TWT = Thin-Wall, 10BWG = 10 BWG, S80 = Sch 80
Posts (1 or 2)
Anchor Type: UA = Univer-Conc, UB = Univer-Bolt, WA = Wedge-Conc, SA = Slip-Conc, SB = Slip-Bolt
Mounting Designation: P = Prefab. "Plain", T = Prefab. "T", U = Prefab. "U"; 1EXT or 2EXT = # of Ext., BM = Extruded Wind Beam, WC = 1/2 #/Ft Wind Chan., EXAL = Extruded Alum. Signs

PLAN SHEET NO.	SIGN NO.	SIGN NOMENCLATURE	SIGN TEXT	SIGN DIMENSIONS	LEGEND SHEETING	BACKGROUND SHEETING	PLYWOOD TYPE A	ALUMINUM TYPE A	ALUMINUM TYPE G	Post Type	Posts	Anchor Type	Mounting Designation
	83	R3-5R	RIGHT ONLY	30X36	C	C		X		10BWG	1	SA	T
	84	M3-4	WEST	24X12	C	C		X		10BWG	1	SA	U
		M1-6F	FM 428	24X24	C	C		X					
		M1-6L	ARROW LEFT	21X15	C	C		X					
		M3-2	EAST	24X12	C	C		X					
		M1-6F	FM 428	24X24	C	C		X					
		M1-6R	ARROW RIGHT	21X15	C	C		X					
	85	W1-10	ARROW TWO-WAY	96X36	C	C		X		S80	1	SA	U
	86	W1-10	LANE ENDS MERGE LEFT	36X36	C	C		X		10BWG	1	SA	T
	87	M4-5G	TO DALLAS NORTH TOLLWAY	24X12	C	C		X		10BWG	1	SA	U
		S7		24X24	C	C		X					
		M5-1GL	ARROW LEFT	21X15	C	C		X					
		M3-4	WEST	24X12	C	C		X					
		M1-6F	FM 428	24X24	C	C		X					
		M6-3	ARROW STRAIGHT	21X15	C	C		X					
	88	R3-8(L-T)	LEFT ONLY / STRAIGHT	30X30	C	C		X		10BWG	1	SA	T
	89	W4-2R	RIGHT LANE ENDS	36X36	C	C		X		10BWG	1	SA	T
	90	W2-2L	LEFT INTERSECTION AHEAD	36X36	C	C		X		10BWG	1	SA	T

"CONSTRUCTION RECORD DRAWINGS_8-01-2009

STATE OF TEXAS
GARY B. SAVANYU
84411
LICENSED
PROFESSIONAL ENGINEER
03/30/2007

NO.	DATE	REVISION	APPROV.
1	3/30/07	TxDOT DRIVEWAY PERMIT - C.O. #1	SAVANYU

DALLAS PARKWAY EXTENSION

COLLIN COUNTY

TRAFFIC SIGNS
SUMMARY OF SMALL SIGNS
3 OF 3

Halff Associates, Inc.
ENGINEERS · ARCHITECTS · SCIENTISTS · PLANNERS · SURVEYORS

DRAWN GBS DATE DEC 2006 | DESIGNED GBS DATE DEC 2006
CHECKED DDS DATE | SCALE

BOND PROJECT NO. 03-13 SHEET 252A OF 271

3:41:22 PM
i:\23000s\23819\frisco\dgn\23819ps06.dgn
3/30/2007 3:41:22 PM

DISCLAIMER
The use of this standard is governed by the "Texas Engineering Practice Act". No warranty of any kind is made by TxDOT for any purpose whatsoever. TxDOT assumes no responsibility for the conversion of this standard to other formats or for incorrect results or damages resulting from its use.

OBJECT MARKERS

TYPES 1 and 4

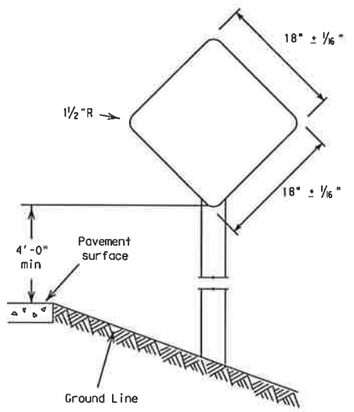

TYPE 1
18" x 18"
Yellow Type E Sheeting

TYPE 4
18" x 18"
Red Type D Sheeting

Use Sign blank 0.080" thick sheet aluminum conforming to ASTM B-209 Alloy 6061-T6. Use reflective sheeting in accordance with DMS 8300.

TYPE 2

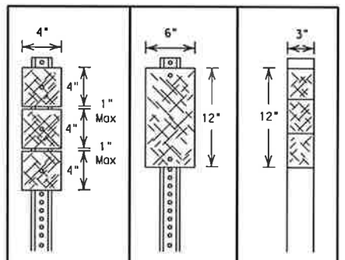

Number of Reflectors	X	Y	Z
Post	WC	WC	FLX/RCR

ALL TYPE 2 OBJECT MARKERS ARE YELLOW

WC-wing channel post (1.12 lbs/ft) per ASTM A 1011 SS Gr 50

FLX/RCR-flexible post (driveable and surface mount) or recycled rubber

Typically used on bridge rail approach ends, some bridge abutments and at bridge rail exits on two-lane, two-way roadways

TYPE 3

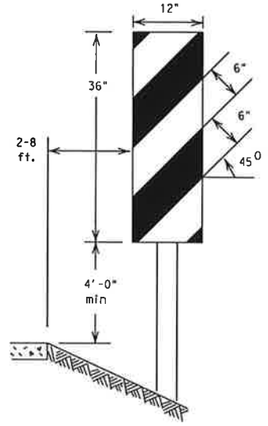

Use Sign blank .080" thick sheet aluminum conforming to ASTM B-209 Alloy 6061-T6. Use reflective sheeting in accordance with DMS 8300, Type E. Use at bridges with no approach rails.

DELINEATORS

Number of Reflectors	SINGLE: D-SY, D-SR or D-SW		DOUBLE: D-DY or D-DW	
	S		D	
Post	WC	FLX/RCR	WC	FLX/RCR

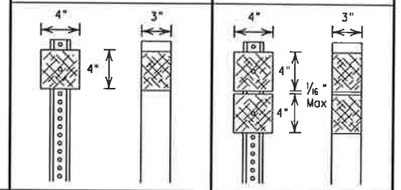

Length of post may vary to meet field conditions.

REFLECTOR UNITS: W-white, R-red or Y-yellow

WC-wing channel post (1.12 lbs/ft) per ASTM A 1011 SS Gr 50

FLX/RCR-flexible post (driveable and surface mount) or recycled rubber.

REFLECTOR UNIT SIZES

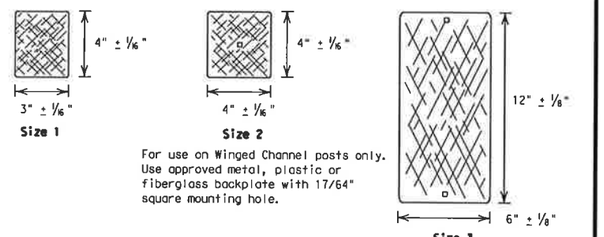

Size 1

Size 2
For use on Winged Channel posts only. Use approved metal, plastic or fiberglass backplate with 17/64" square mounting hole.

Size 3
For use on Winged Channel posts only. Use approved metal, plastic or fiberglass backplate with 17/64" square mounting hole.

REFLECTIVE SHEETING
Yellow - DMS 8300, Type E White - DMS 8300, Type D
Red- - DMS 8300, Type D

TYPE C BARRIER REFLECTORS

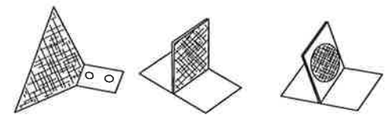

REFLECTIVE SHEETING
Yellow - DMS 8300, Type E
White - DMS 8300, Type D

Mounting holes - 17/64 "

A Type A or B reflector unit (per DMS 8600) attached to a bracket to facilitate the mounting of the reflector on concrete traffic barrier, railing, metal beam guard fence (MBGF) or other locations shown on the plans. A list of approved Type C reflectors can be found at:

ftp://ftp.dot.state.tx.us/pub/txdot-info/cmd/mpl/typcdeln.pdf

D & OM DESCRIPTIVE CODES

INSTL DEL ASSM (D-XX)SZ X(XXX)XXX(XX)

Number of Reflectors
S = Single
D = Double
Color of Reflectors
W = White
Y = Yellow
Reflector Unit Size
1 or 2
Type of Post
WC = Wing Channel Post
FLX = Flexible Post
RCR = Recycled Rubber
TYC = Type C Barrier Reflector
Type of Installations
GND = Ground Mount
CTB = Concrete Barrier Mount (Type C only)
GF1, GF2, GF3 = Guard Fence Attachment
SRF = Surface Mount
SLF = Self Righting
Direction
IF REQUIRED
BI = Bi-Directional
BR = Bi-Directional with red on back

INSTL OM ASSM (OM-XX)(XXX)XXX(XX)

Type of Object Marker
1, 2, 3, or 4
Number of Reflectors
X = 3 each Size 2 reflector units (Type 2 only)
Y = 1 Size 3 reflector unit (Type 2 only)
Z = 3 each Size 1 reflector units (Type 2 only)
L = Left Side (Type 3 Object Marker only)
R = Right Side (Type 3 Object Marker only)
Type of Post
WC = Wing Channel Post
FLX = Flexible Post
RCR = Recycled Rubber
TWT = Thin Walled Tubing
Type of Mount
GND = Ground Mount
WP = Wedge Anchor Plastic System
SRF = Surface Mount
SLF = Self Righting
WS = Wedge Anchor Steel System
Direction
IF REQUIRED
BI = Bi-Directional

ACC:
LEVELS DISPLAYED
1 2 3 4 5 6 7 8 9 10 11 12 13 14 15 16
17 18 19 20 21 22 23 24 25 26 27 28 29 30 31 32
33 34 35 36 37 38 39 40 41 42 43 44 45 46 47 48
49 50 51 52 53 54 55 56 57 58 59 60 61 62 63

TYPES OF INSTALLATIONS

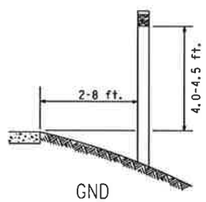

GND

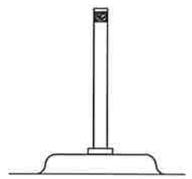

Surface Mount & Self Righting Surface Mount

SLF & SRF

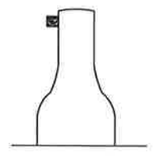

Concrete Barrier

CTB
(Type C only)

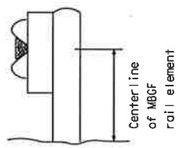

GF1
(Type C only)

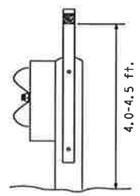

GF2

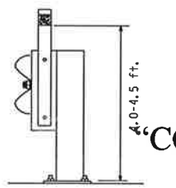

MBGF at low fill culvert

GF3

GROUND MOUNT DETAILS

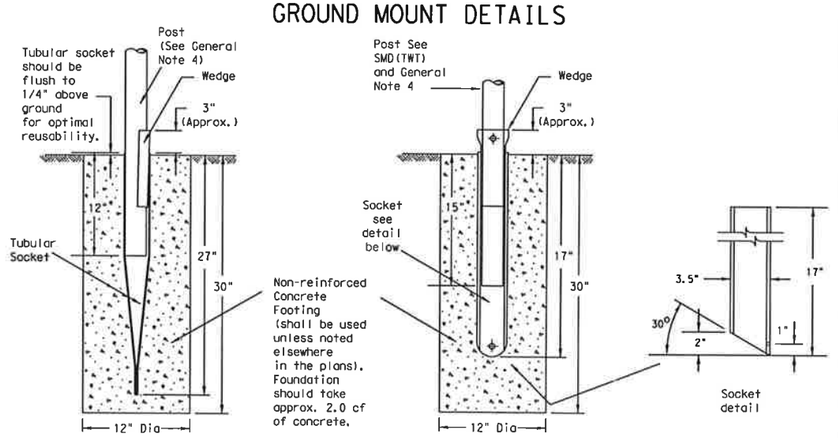

WEDGE ANCHOR STEEL SYSTEM

WEDGE ANCHOR PLASTIC SYSTEM

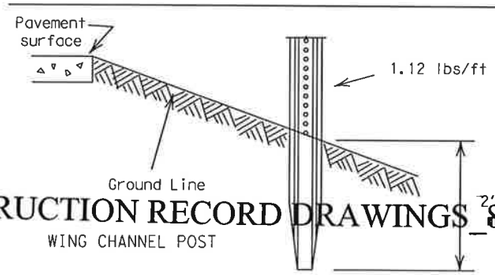

WING CHANNEL POST

NOTE: Wing Channel post option is to be used for Type 2 Object Markers and delineators only

GENERAL NOTES

1. Place delineators on a section of roadway the same distance from the edge of pavement.
2. Where a restriction prevents consistent placement from the pavement edge, place the affected object markers in line with the innermost edge of the obstruction.
3. When object markers are more than 8 ft from the edge of the pavement, it may not be possible to maintain a height of 4.0-4.5 ft. If this is the case, place the object markers as close to the desired height as possible.
4. Install all delineators, object markers and barrier reflectors in accordance with the manufacturer's recommendation.

DEPARTMENTAL MATERIAL SPECIFICATIONS

FLEXIBLE DELINEATOR & OBJECT MARKER POSTS (DRIVEABLE & SURFACE MOUNT TYPES)	DMS-4400
FLAT SURFACE REFLECTIVE SHEETING	DMS-8300
DELINEATORS AND OBJECT MARKERS	DMS-8600

"CONSTRUCTION RECORD DRAWINGS" 8-01-2009

STANDARD PLANS
Texas Department of Transportation
Traffic Operations Division

DELINEATOR & OBJECT MARKER INSTALLATION AND MATERIAL DESCRIPTION
D & OM(1)-04

© TxDOT August 2004

DW: DAS	CK: GRB	DW: FDN	CK: CAL

REVISIONS	STATE DISTRICT	FEDERAL REGION	FEDERAL AID PROJECT	SHEET
		6		253

COUNTY	CONTROL	SECTION	JOB	HIGHWAY

P-200612-01

20A

DISCLAIMER
The use of this standard is governed by the "Texas Engineering Practice Act". No warranty of any kind is made by TxDOT for any purpose whatsoever. TxDOT assumes no responsibility for the conversion of this standard to other formats or for incorrect results or damages resulting from its use.

USES OF DELINEATORS

Type of Road or Condition		Condition for use: Required (shall be used)	Recommended (should be used)	Optional (may be used)	Prohibited (cannot be used)	Delineator Spacing
Freeways or Expressways	Tangent	D-SW on right or raised pavement markers				200-530 ft
	Curve	D-SW on right				see Table
	Ramp	D-SW on one side See Note 1 *	On outside of interchange ramp curves			
Other Than Freeways or Expressways	Tangent			D-SW on right or left side	D-SY or D-DY on left side of two-way roads	200-530 ft
	Curve					see Table
Acceleration and Deceleration Lanes			D-DW or D-DY			100 ft spacing
Crossovers			D-DY on left side of through road on far side of crossover			
Wrong-way				D-SR for wrong-way traffic		
Pavement Narrowing (lane merge)				D-SW (right) or D-SY (left) adjacent to affected lane for full length of transition See Note 2 **		
Truck escape ramps			D-SR on both sides of ramp			50 ft spacing
With guard fence, bridge rail, or concrete barrier						100 ft use min. of 3

General Notes: Unless indicated otherwise, the color of a delineators must conform to the color of the pavement edge line on the side of the road where the delineators are placed. Barrier markers can be used to replace required delineators. DS-R can be mounted on the back side of existing delineator posts.

* 1. Delineation required on one side either SY or SW.
** 2. Minimum of 3.

Suggested Spacing for Highway Delineators on Horizontal Curves △

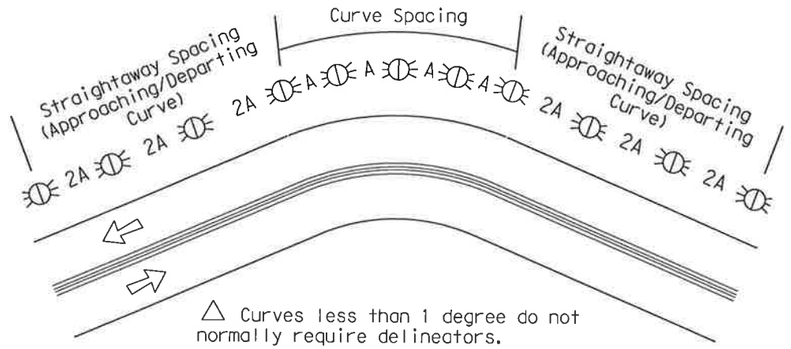

△ Curves less than 1 degree do not normally require delineators.

Suggested Spacing for Chevrons on Horizontal Curves △

The Chevron may be used to provide additional emphasis and guidance for a change in horizontal alignment. A Chevron may be used as a supplement to delineation.

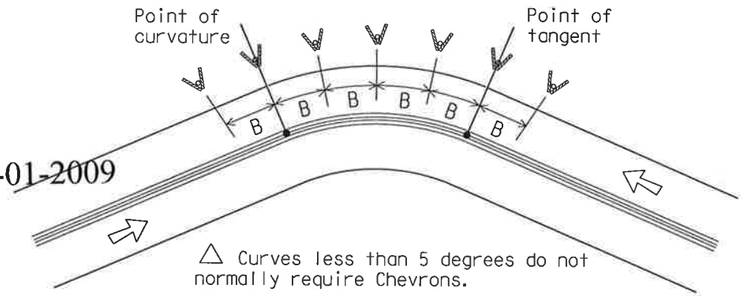

△ Curves less than 5 degrees do not normally require Chevrons.

GUIDELINES FOR USE OF WARNING DEVICES AT CURVES WITH ADVISORY SPEED LIMITS

Amount by which Advisory Speed Is less than Posted Speed	Warning Devices Needed
0 to 14 MPH	RPMs
15 to 24 MPH	RPMs and Delineators
25 MPH or greater	RPMs and Chevrons

"CONSTRUCTION RECORD DRAWINGS_8-01-2009

When degree of curve or radius is known

When degree of curve or radius is not known

Advisory Speed (MPH)	Spacing in Curve	Spacing in Strtawy	Chevron Spacing in Curve
	A	2xA	B
65	130	260	
60	110	220	
55	100	200	160
50	85	170	160
45	75	150	160
40	70	140	120
35	60	120	120
30	55	110	80
25	50	100	80
20	40	80	80
15	35	70	40

If the degree of curve is not known, delineator spacing may be determined based on the Advisory Speed of the curve. Use the delineator curve spacing for each Advisory Speed (MPH).

Degree of Curve	Feet: Radius of Curve	Spacing in Curve	Spacing in Strtawy	Chevron Spacing in Curve
		A	2A	B
1	5730	225	450	
2	2865	160	320	
3	1910	130	260	
4	1433	110	220	
5	1146	100	200	160
6	955	90	180	160
7	819	85	170	160
8	716	75	150	160
9	637	75	150	120
10	573	70	140	120
11	521	65	130	120
12	478	60	120	120
13	441	60	120	120
14	409	55	110	80
15	382	55	110	80
16	358	55	110	80
19	302	50	100	80
23	249	40	80	80
29	198	35	70	40
38	151	30	60	40
57	101	20	40	40

Curve delineator approach and departure spacing should include 3 delineators spaced at 2A. This spacing should be used during design preparation or when the degree of curve is known.

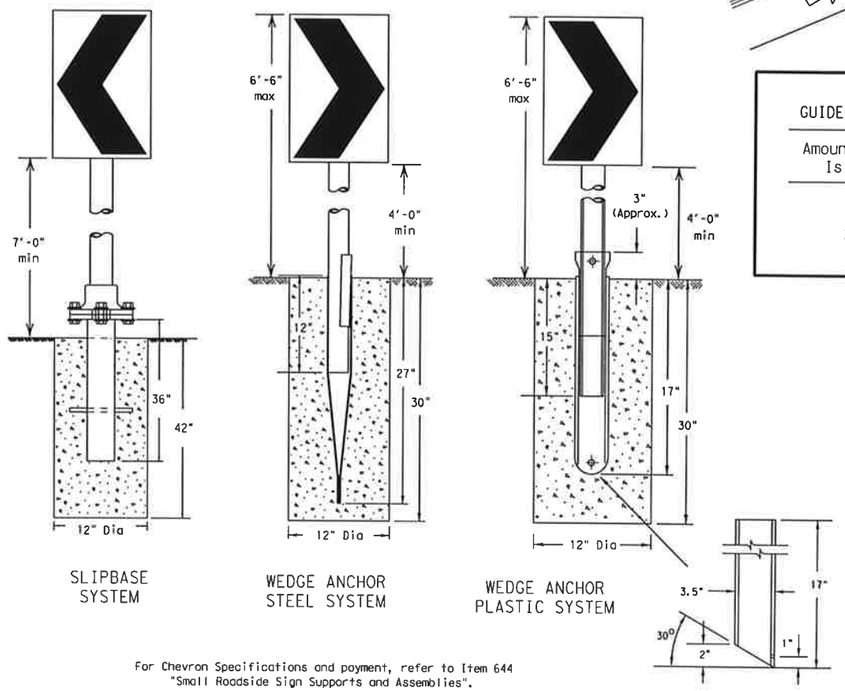

For Chevron Specifications and payment, refer to Item 644 "Small Roadside Sign Supports and Assemblies".

STANDARD PLANS
Texas Department of Transportation
Traffic Operations Division

TYPICAL DELINEATOR & OBJECT MARKER PLACEMENT DETAILS

D & OM(2)-04

© TxDOT August 2004	DN: DAS	CK: GRB	DW: FDN	CK: CAL
REVISIONS	STATE DISTRICT	FEDERAL REGION	FEDERAL AID PROJECT	SHEET
		6		254
	COUNTY	CONTROL	SECTION	JOB	HIGHWAY

LEVELS DISPLAYED
1 2 3 4 5 6 7 8 9 10 11 12 13 14 15 16 17 18 19 20 21 22 23 24 25 26 27 28 29 30 31 32 33 34 35 36 37 38 39 40 41 42 43 44 45 46 47 48 49 50 51 52 53 54 55 56 57 58 59 60 61 62 63
ACC:

DISCLAIMER
The use of this standard is governed by the "Texas Engineering Practice Act". No warranty of any kind is made by TxDOT for any purpose whatsoever. TxDOT assumes no responsibility for the conversion of this standard to other formats or for incorrect results or damages resulting from its use.

Two-way, Two lane Roadway with Reduced Width Approach Rail

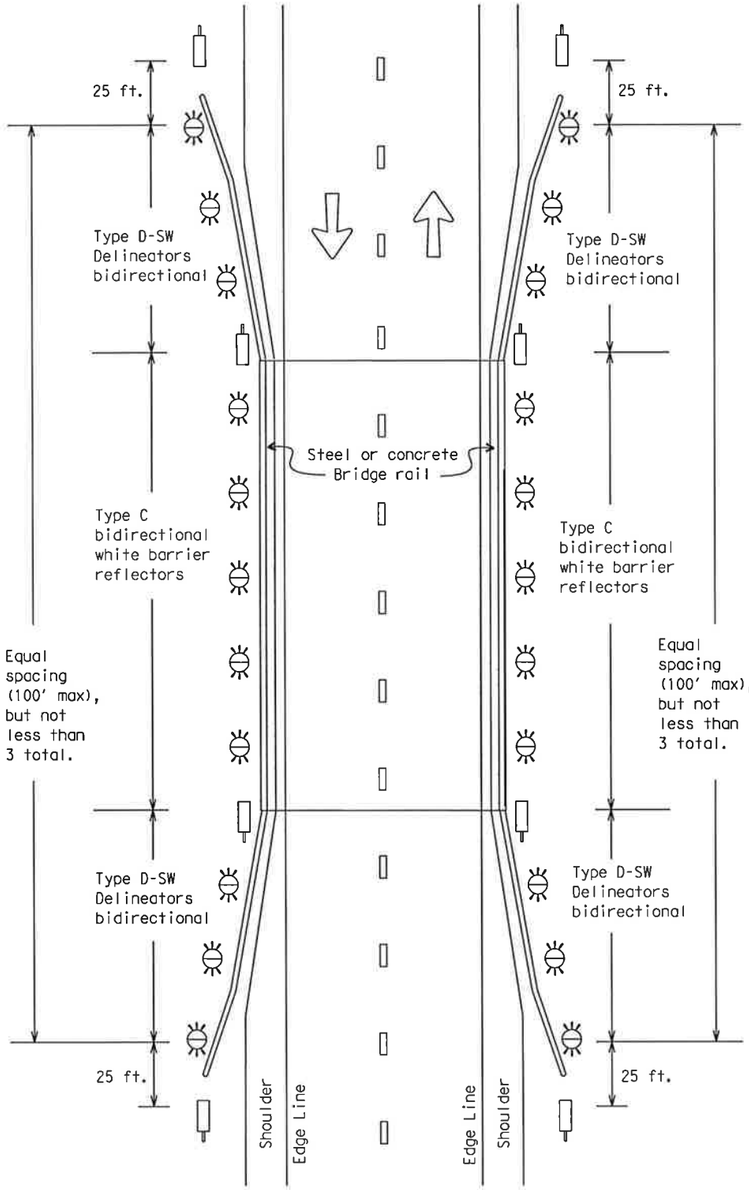

Two-way, Two lane Roadway with Metal Beam Guard Fence (MBGF)

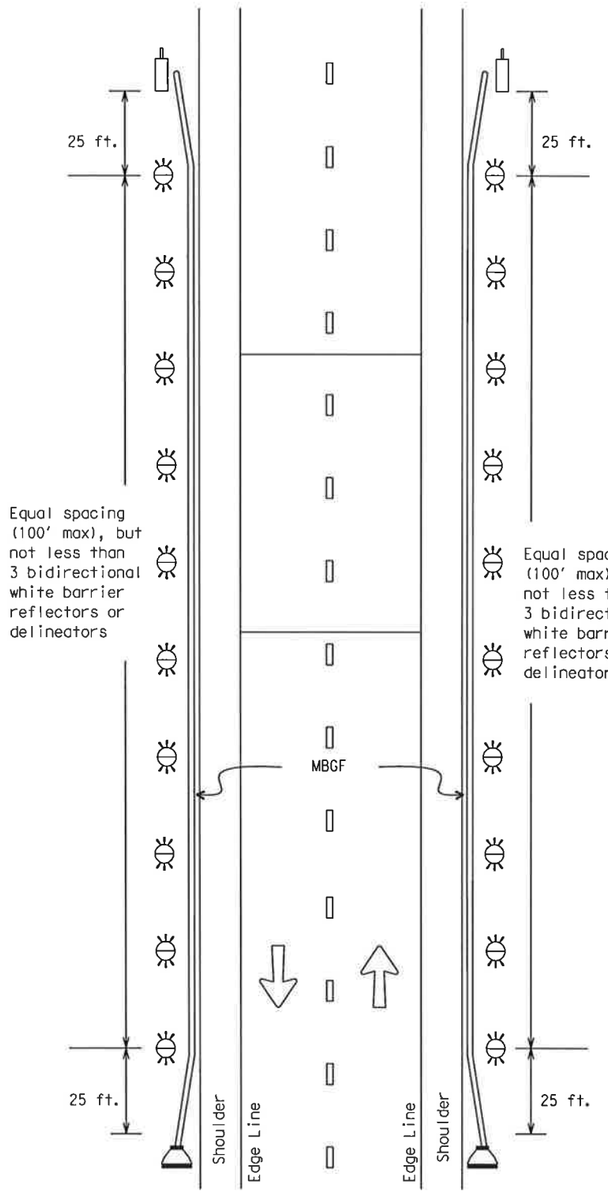

Two-way, Two lane Roadway Bridge with No Approach Rail

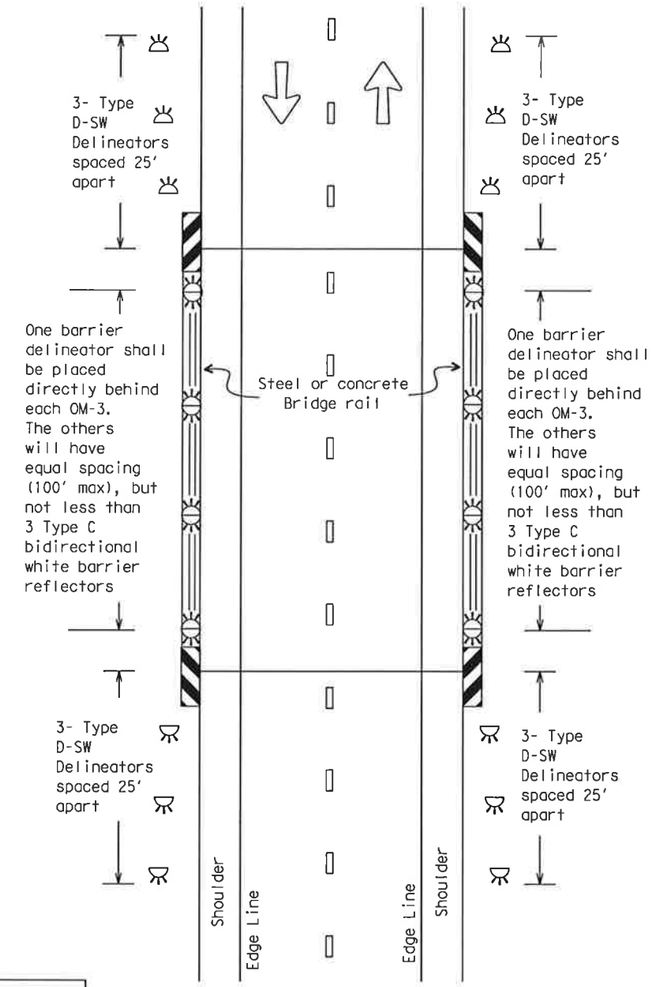

LEGEND

- Bidirectional Delineator
- Delineator
- OM-3
- OM-2
- Terminal End

Terminal Ends include OB-3F. There is no need to install an OM-2 in front of terminal.

"CONSTRUCTION RECORD DRAWINGS_8-01-2009

LEVELS DISPLAYED
ACC:

STANDARD PLANS
Texas Department of Transportation
Traffic Operations Division

DELINEATOR & OBJECT MARKER PLACEMENT DETAILS

D & OM(3)-04

© TxDOT August 2004	DN: DAS	CK: GRB	DW: FDN	CK: CAL
REVISIONS	STATE DISTRICT	FEDERAL REGION	FEDERAL AID PROJECT	SHEET
		6		255
	COUNTY	CONTROL	SECTION	JOB	HIGHWAY

P-200612-01 20C

DISCLAIMER
The use of this standard is governed by the "Texas Engineering Practice Act". No warranty of any kind is made by TxDOT for any purpose whatsoever. TxDOT assumes no responsibility for the conversion of this standard to other formats or for incorrect results or damages resulting from its use.

Continuous Concrete Barrier

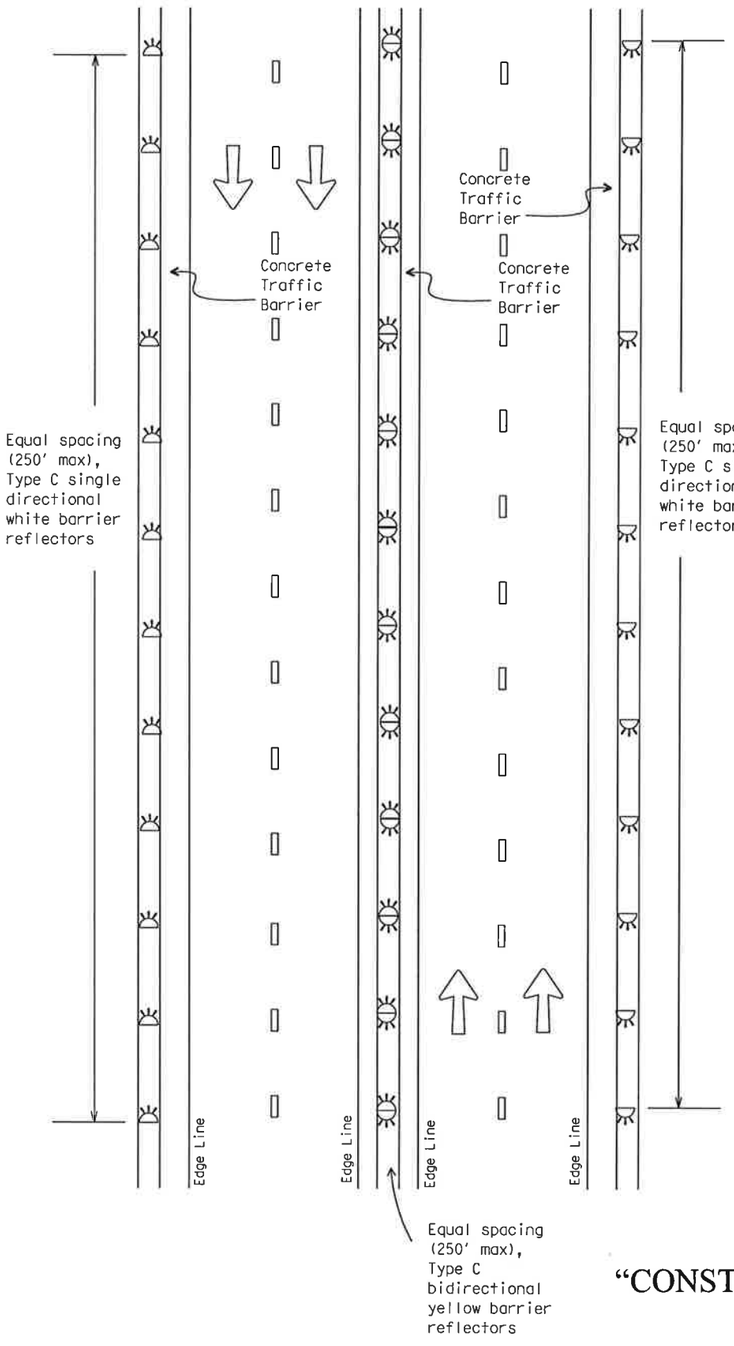

Multi-lane Undivided, Two-way Roadway with Metal Beam Guard Fence (MBGF)

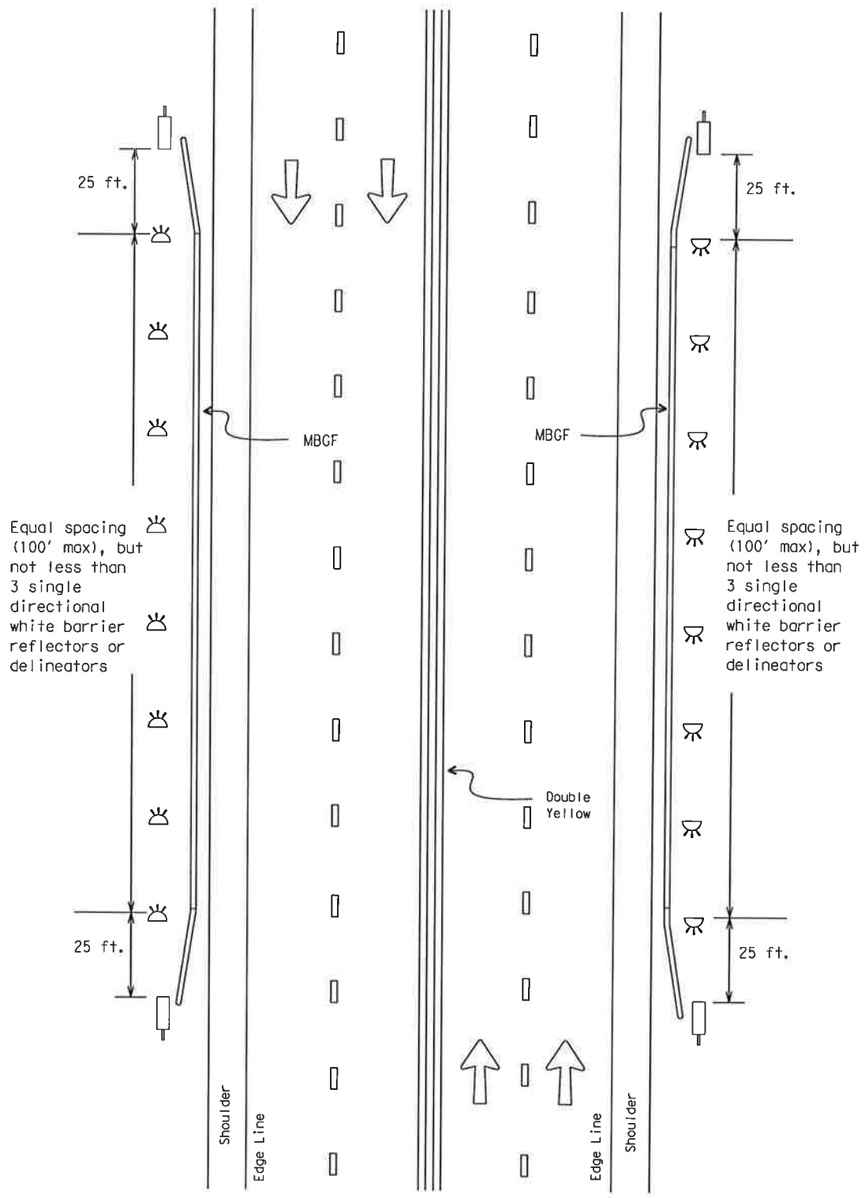

LEGEND
- Bidirectional Delineator
- Delineator
- OM-3
- OM-2

LEVELS DISPLAYED
1 2 3 4 5 6 7 8 9 10 11 12 21 31 41 51 61 71 81 91 02 02 22 32 42 52 62 72 82 92 03 03 13 23 33 43 53 63 73 83 94 04 14 24 34 44 54 64 74 84 94 05 15 25 35 45 55 65 75 85 95 06 16 26 36

ACC:

"CONSTRUCTION RECORD DRAWINGS_8-01-2009

STANDARD PLANS
Texas Department of Transportation
Traffic Operations Division

DELINEATOR & OBJECT MARKER PLACEMENT DETAILS

D & OM(4)-04

© TxDOT August 2004	DN: DAS	CK: GRB	DW: FDN	CK: CAL
REVISIONS	STATE DISTRICT	FEDERAL REGION	FEDERAL AID PROJECT	SHEET
		6		256
	COUNTY	CONTROL	SECTION	JOB	HIGHWAY

P-200612-01 POD

DISCLAIMER
The use of this standard is governed by the "Texas Engineering Practice Act". No warranty of any kind is made by TxDOT for any purpose whatsoever. TxDOT assumes no responsibility for the conversion of this standard to other formats or for incorrect results or damages resulting from its use.

Divided Roadway with Metal Beam Guard Fence

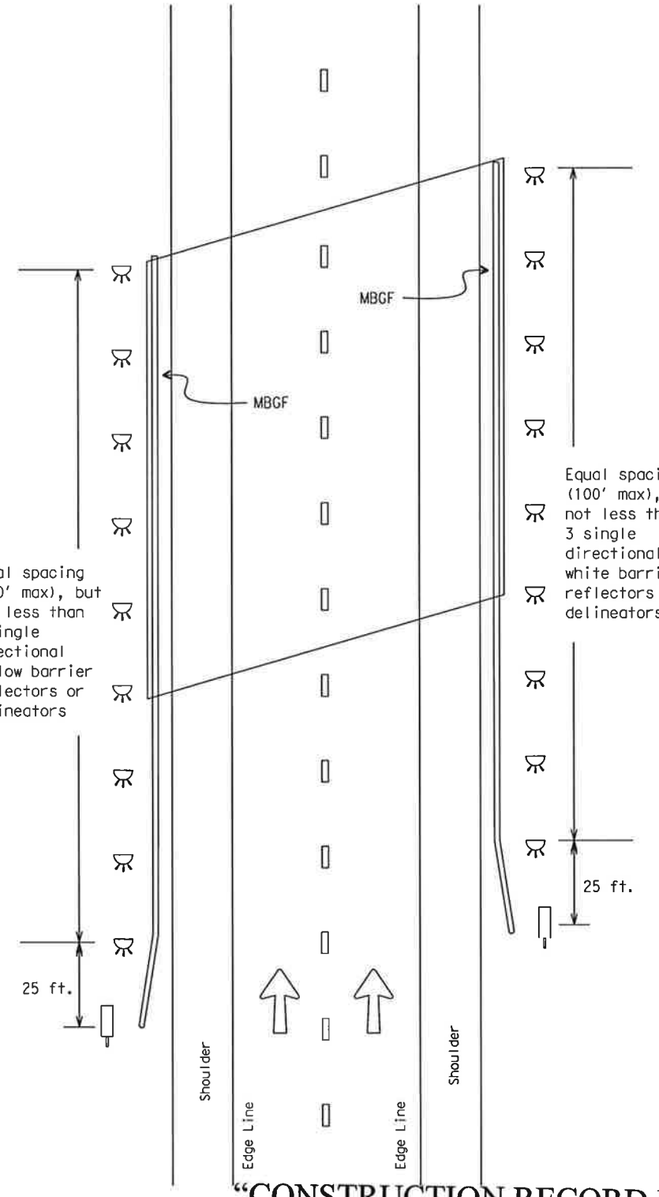

Freeway Delineation including Ramps

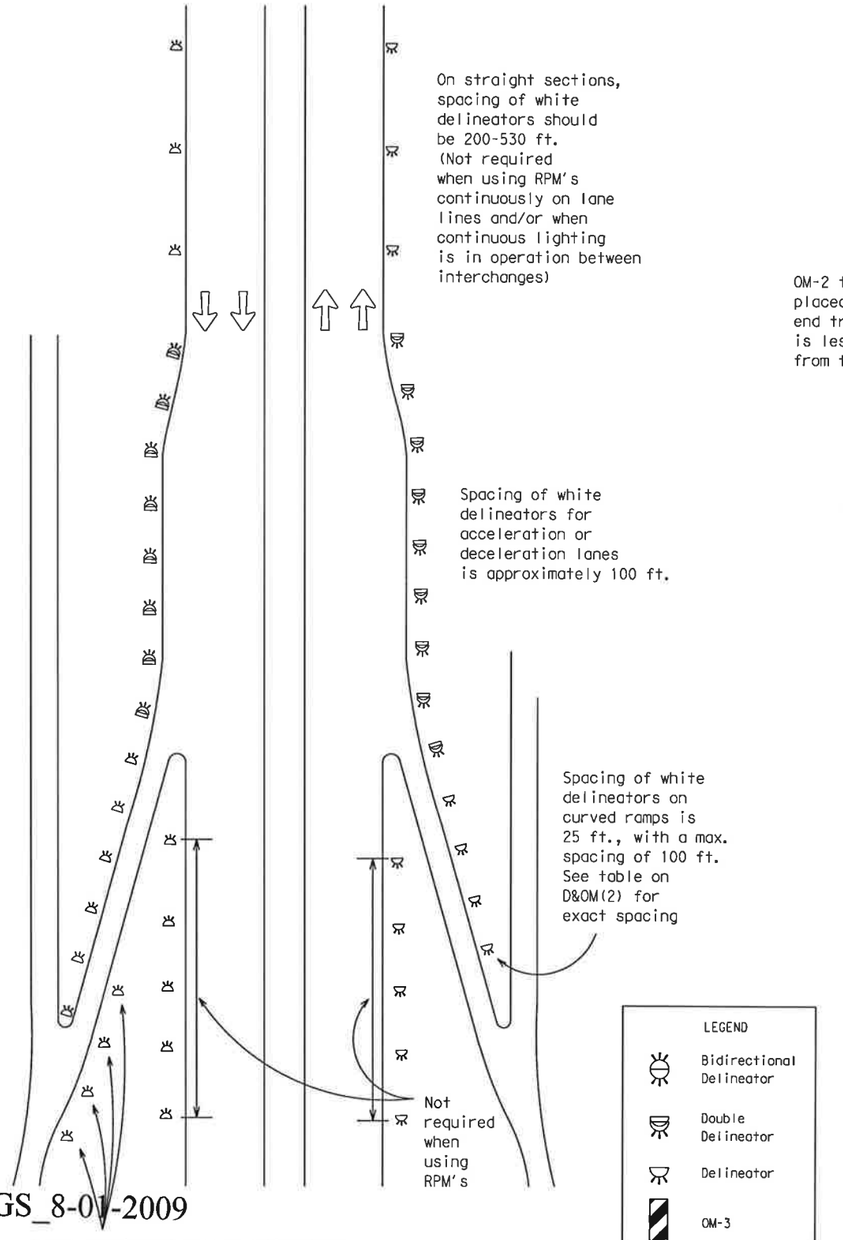

For Culverts without MBGF

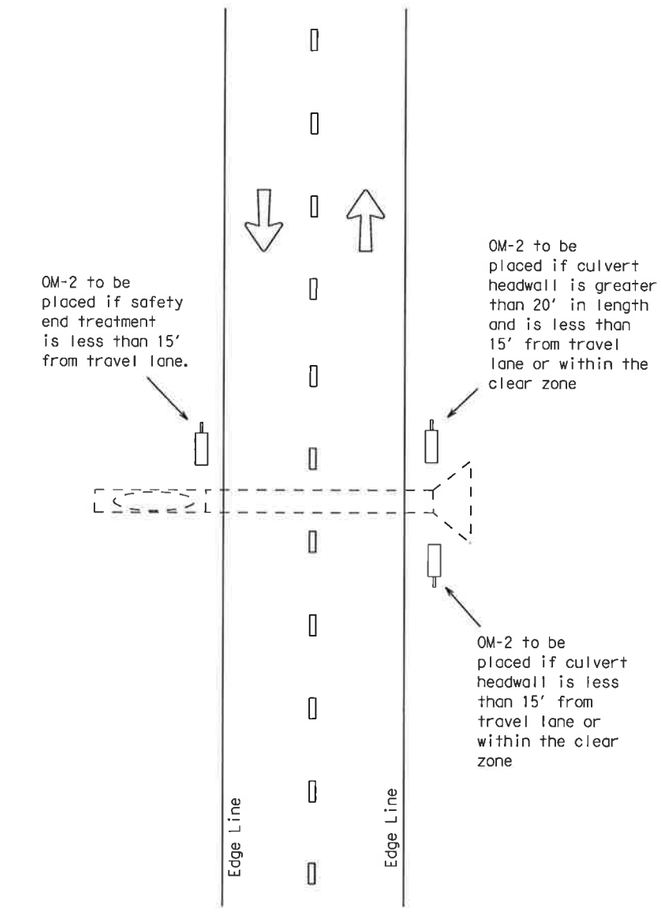

LEGEND

- Bidirectional Delineator
- Double Delineator
- Delineator
- OM-3
- OM-2

LEVELS DISPLAYED

1	2	3	4	5	6	7	8	9	10	11	12	13	14	15	16
17	18	19	20	21	22	23	24	25	26	27	28	29	30	31	32
33	34	35	36	37	38	39	40	41	42	43	44	45	46	47	48
49	50	51	52	53	54	55	56	57	58	59	60	61	62	63	

ACC:

"CONSTRUCTION RECORD DRAWINGS_8-01-2009

STANDARD PLANS
Texas Department of Transportation
Traffic Operations Division

DELINEATOR & OBJECT MARKER PLACEMENT DETAILS

D & OM(5)-04

©TxDOT August 2004	DN: DAS	CK: GRB	DW: FDN	CK: CAL
REVISIONS	STATE DISTRICT	FEDERAL REGION	FEDERAL AID PROJECT	SHEET
		6		257
	COUNTY	CONTROL	SECTION	JOB	HIGHWAY

DISCLAIMER
The use of this standard is governed by the "Texas Engineering Practice Act". No warranty of any kind is made by TxDOT for any purpose whatsoever. TxDOT assumes no responsibility for the conversion of this standard to other formats or for incorrect results or damages resulting from its use.

SIGN SUPPORT DESCRIPTIVE CODES

(Descriptive Codes correspond to project estimate and quantities sheets)

SM RD SGN ASSM TY XXXXX(X)XX(X-XXXX)

Post Type

FRP = Fiberglass Reinforced Plastic Pipe (see SMD(FRP))
TWT = Thin-Walled Tubing (see SMD(TWT))
10BWG = 10 BWG Tubing (see SMD(SLIP-1) to SMD(SLIP-3))
S80 = Schedule 80 Pipe (see SMD(SLIP-1) to SMD(SLIP-3))

Number of Posts (1 or 2)

Anchor Type

UA = Universal Anchor - Concreted (see SMD(FRP) and SMD(TWT))
UB = Universal Anchor - Bolted down (see SMD(FRP) and SMD(TWT))
WA = Wedge Anchor - (see SMD(TWT))
SA = Slipbase - Concreted (see SMD(SLIP-1) to SMD(SLIP-3))
SB = Slipbase - Bolted Down (see SMD(SLIP-1) to SMD(SLIP-3))

Sign Mounting Designation

P = Prefab. "Plain" (see SMD(SLIP-1) to (3), SMD(TWT), SMD(FRP))
T = Prefab. "T" (see SMD(SLIP-1) to (3), SMD(TWT))
U = Prefab. "U" (see SMD(SLIP-1) to (3))
IF REQUIRED
1EXT or 2EXT = Number of Extensions (see SMD(SLIP-1) to (3), SMD(TWT))
BM = Extruded Wind Beam (see SMD(SLIP-1) to (3))
WC = 1.12 #/ft Wing Channel (see SMD(SLIP-1) to (3))
EXAL = Extruded Aluminum sign panels (see SMD(SLIP-3))

REQUIRED CLEARANCE FOR BREAKAWAY SUPPORT

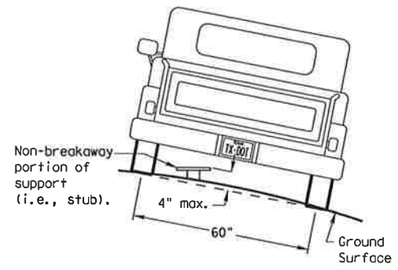

To avoid vehicle undercarriage snagging, any substantial remains of a breakaway support, when it is broken away, should not project more than 4 inches above a 60-inch chord (i.e., typical space between wheel paths).

SIGN LOCATION

PAVED SHOULDERS

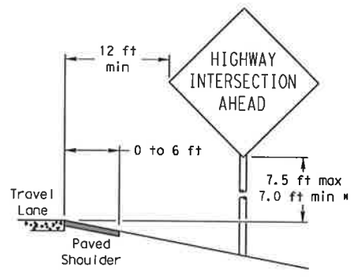

LESS THAN 6 FT. WIDE

When the shoulder is 6 ft. or less in width, the sign must be placed at least 12 ft. from the edge of the travel lane.

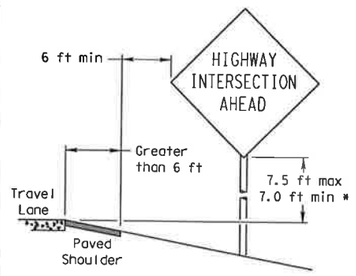

GREATER THAN 6 FT. WIDE

When the shoulder is greater than 6 ft in width, the sign must be placed at least 6 ft. from the edge of the shoulder.

T-INTERSECTION

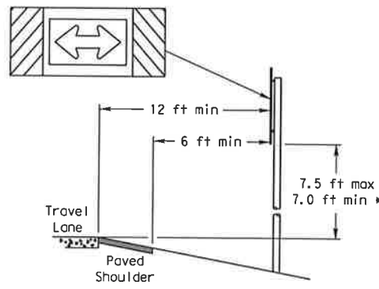

When this sign is needed at the end of a two-lane, two way roadway, the right edge of the sign should be in line with the centerline of the roadway. Place as close to ROW as practical.

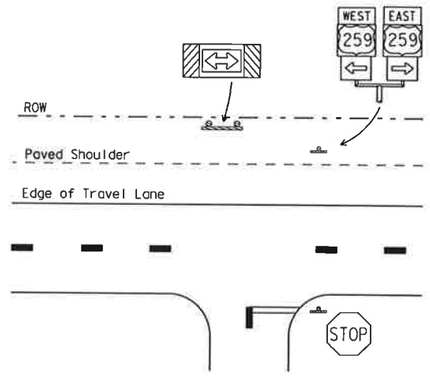

BEHIND BARRIER

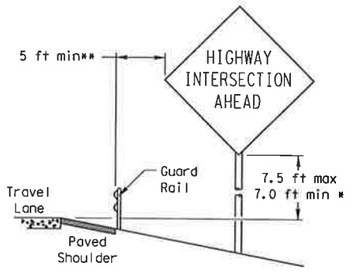

BEHIND GUARDRAIL

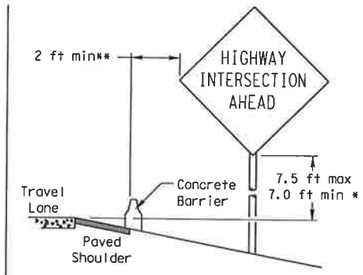

BEHIND CONCRETE BARRIER

**Sign clearance based on distance required for proper guard rail or concrete barrier performance.

* Signs shall be mounted using the following condition that results in the greatest sign elevation:

(1) a minimum of 7 to a maximum of 7.5 feet above the edge of the travel lane or

(2) a minimum of 7 to a maximum of 7.5 feet above the grade at the base of the support when sign is installed on the backslope.

The maximum values may be increased when directed by the Engineer.

See the Traffic Operations Division website for detailed drawings of sign clamps, Texas Universal Triangular Slipbase System components and Wedge Anchor System components.

The website address is:
ftp://ftp.dot.state.tx.us/pub/txdot-info/cmd/cserve/standard/traffic/slip.pdf

No more than 2 sign posts should be located within a 7 ft. circle.

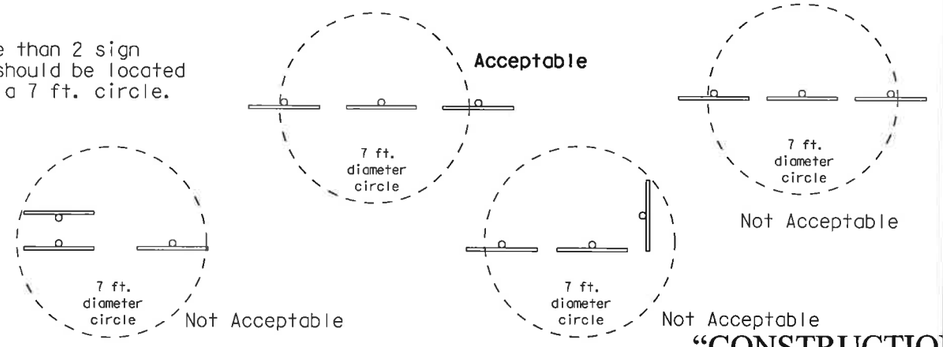

"CONSTRUCTION RECORD DRAWINGS 8-01-2009

TYPICAL SIGN ATTACHMENT DETAIL

Single Signs

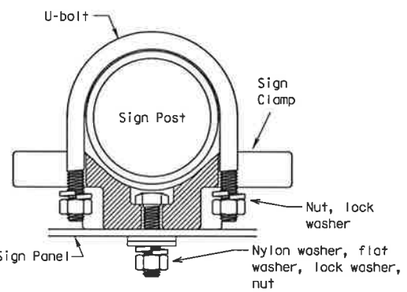

Bolts used to mount sign panels to the clamp are 5/16-18 UNC galvanized square head with nut, nylon washer, flat washer and lock washer. The bolt length is 1 inch for aluminum and 1 3/4 inch for plywood signs.

When two sign clamps are used to mount signs back-to-back, use a 5/16-18 UNC galvanized hex head per ASTM A307 with nut and helical-spring lock washer. The approximate bolt lengths for various post sizes and sign clamp types are given in the table at right. The bolt length may need to be adjusted depending upon field conditions.

Sign clamps may be either the specific size clamp or the universal clamp.

Back-to-Back Signs

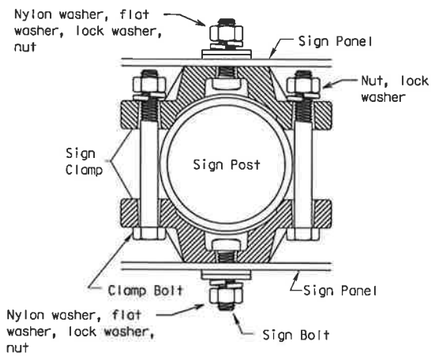

Pipe Diameter	Approximate Bolt Length	
	Specific Clamp	Universal Clamp
2" nominal	3"	3 or 3 1/2"
2 1/2" nominal	3 or 3 1/2"	3 1/2 or 4"
3" nominal	3 1/2 or 4"	4 1/2"

SIGNS WITH PLAQUES

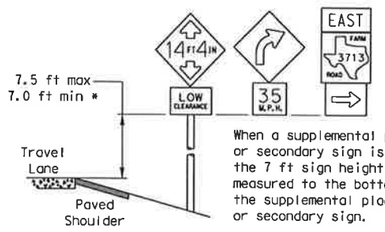

When a supplemental plaque or secondary sign is used, the 7 ft sign height is measured to the bottom of the supplemental plaque or secondary sign.

MEDIANS

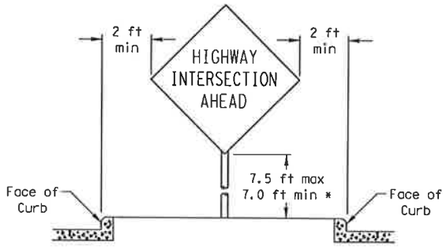

RESTRICTED RIGHT-OF-WAY

(When 6 ft min. is not possible.)

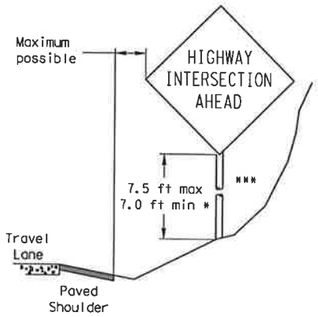

Right-of-way restrictions may be created by rocks, water, vegetation, forest, buildings, a narrow island, or other factors.

In situations where a lateral restriction prevents the minimum horizontal clearance from the edge of the travel lane, signs should be placed as far from the travel lane as practical.

*** Post may be shorter if protected by guardrail or if Engineer determines the post could not be hit due to extreme slope.

STANDARD PLANS
TEXAS DEPARTMENT OF TRANSPORTATION
Traffic Operations Division

SIGN MOUNTING DETAILS SMALL ROADSIDE SIGNS GENERAL NOTES & DETAILS

SMD(GEN)-02

©TxDOT July 2002	DN: BAS	CK: GRB	DW: FDN	CK: CAL
REVISIONS	STATE DISTRICT	FEDERAL REGION	FEDERAL AID PROJECT	SHEET
		6		258
	COUNTY	CONTROL	SECTION	JOB	HIGHWAY

P-200612-01

LEVELS DISPLAYED ACC:
1 2 3 4 5 6 7 8 9 10 11 12 13 14 15 16
17 18 19 20 21 22 23 24 25 26 27 28 29 30 31 32
33 34 35 36 37 38 39 40 41 42 43 44 45 46 47 48
49 50 51 52 53 54 55 56 57 58 59 60 61 62 63

DISCLAIMER
The use of this standard is governed by the "Texas Engineering Practice Act". No warranty of any kind is made by TxDOT for any purpose whatsoever. TxDOT assumes no responsibility for the conversion of this standard to other formats or for incorrect results or damages resulting from its use.

Texas Universal Triangular Slipbase System

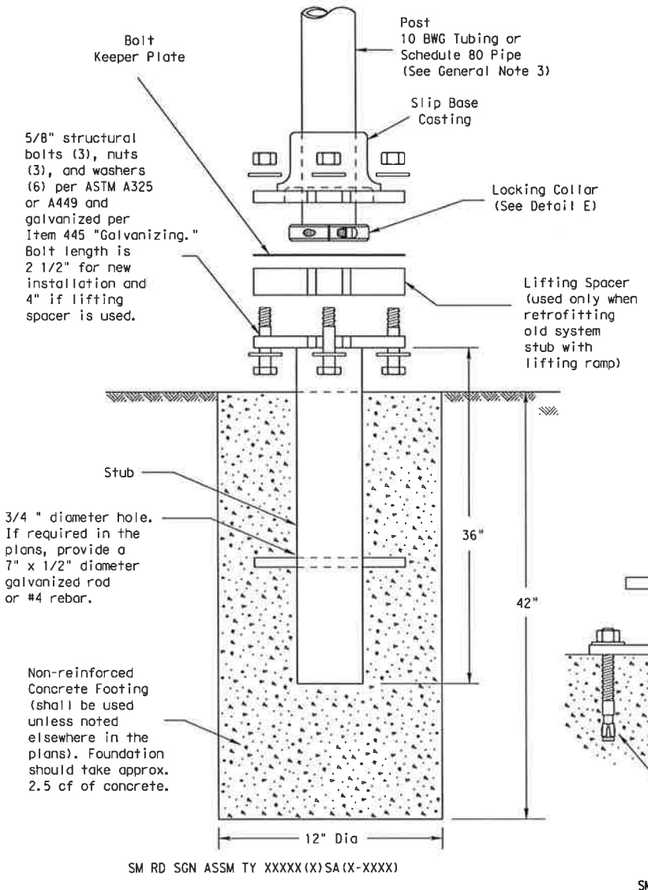

SM RD SGN ASSM TY XXXXX(X)SA(X-XXXX)

Concrete anchor consists of 5/8" diameter stud bolt with UNC series bolt threads on the upper end. Heavy hex nut per ASTM A563, and hardened washer per ASTM F436. The stud bolt shall have minimum yield and ultimate tensile strengths of 50 and 75 KSI, respectively. Nuts, bolts and washers shall be galvanized per Item 445, "Galvanizing." Top of bolt shall extend at least flush with top of the nut when installed. The anchor, when installed in 4000 psi normal-weight concrete with a 5 1/2" minimum embedment, shall have a minimum allowable tension and shear of 3900 and 3100 psi, respectively. Adhesive type anchors shall have stud bolts installed with Type III epoxy per DMS-6100, "Epoxies and Adhesives." Adhesive anchors may be loaded after adequate epoxy cure time, per the manufacturer's recommendations.

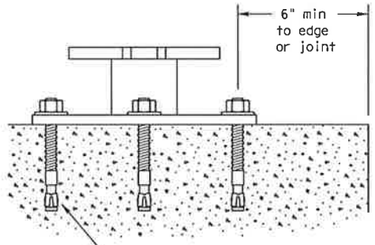

SM RD SGN ASSM TY XXXXX(X)SA(X-XXXX)

CONSTRUCTION RECORD DRAWINGS_8-01-2009

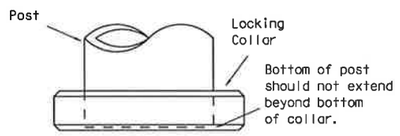

Detail E

ROLL PIN (Optional)

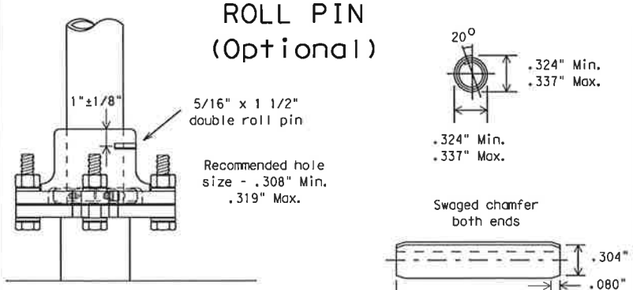

If shown in plans, the Engineer may require the roll pin to be installed to reduce possible sign rotation.

DOUBLE ROLL PIN DETAIL

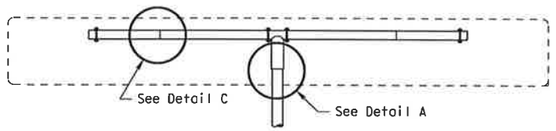

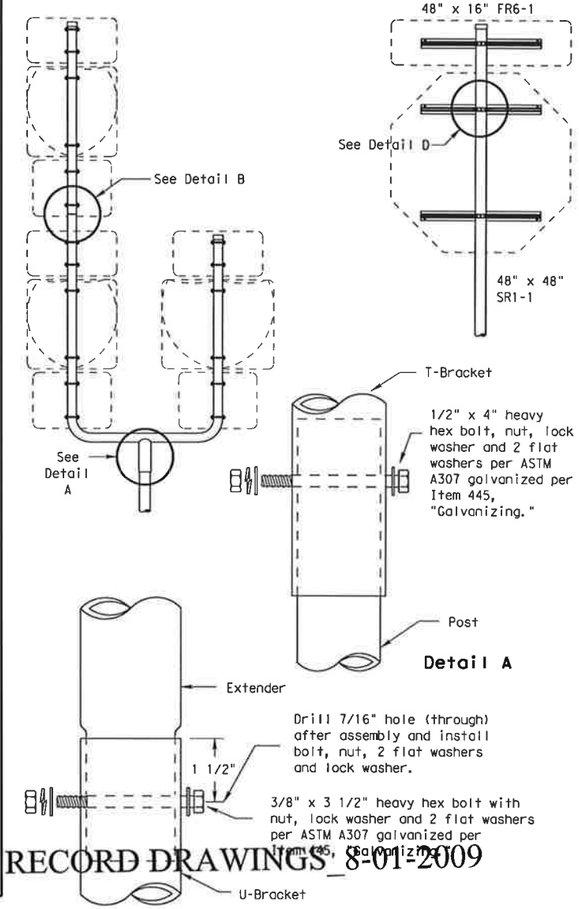

Detail A

Detail B

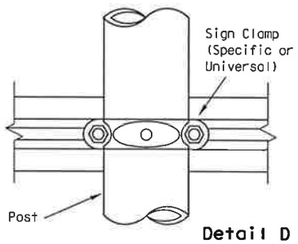

Detail D

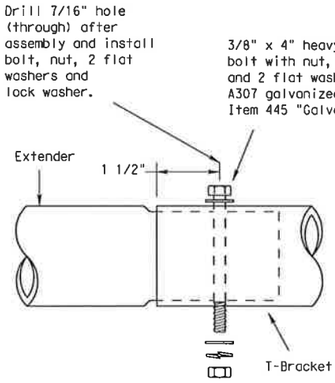

Detail C

Splices shall only be allowed behind the sign substrate.

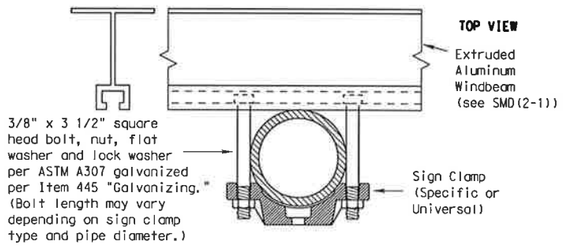

GENERAL NOTES:

1. Finished components, except posts (10 BWG Tubing and Schedule 80 Pipe) and clamps, shall be permanently marked to indicate manufacturer. Method, design, and location of marking are subject to approval of the TxDOT Traffic Standards Engineer.
2. Except for posts (10 BWG Tubing and Schedule 80 Pipe), clamps, nuts and bolts, all components shall be prequalified. A list of prequalified vendors may be obtained from the TxDOT Traffic Standards Engineer, or the Traffic Operations Division website. The website address is: http://www.dot.state.tx.us/insdtdot/orgchart/trf/trfeng/
3. Material used as post with this system shall conform to the following specifications:
   10 BWG Tubing (2.875" outside diameter)
   - 0.134" nominal wall thickness
   - Seamless or electric-resistance welded steel tubing or pipe
   - Steel shall be HSLAS Gr 55 per ASTM A1011 or ASTM A1008
   - Other steels may be used if they meet the following:
     - 55,000 PSI minimum yield strength
     - 70,000 PSI minimum tensile strength
     - 20% minimum elongation in 2"
   - Wall thickness (uncoated) shall be within the range of 0.122" to 0.138"
   - Outside diameter (uncoated) shall be within the range of 2.867" to 2.883"
   - Galvanization per ASTM A123 or ASTM A653 G210. For precoated steel tubing (ASTM A653), recoat tube outside diameter weld seam by metallizing with zinc wire per ASTM B833.

   Schedule 80 Pipe (2.875" outside diameter)
   - 0.276" nominal wall thickness
   - Steel tubing per ASTM A500 Gr C
   - Other seamless or electric-resistance welded steel tubing or pipe with equivalent outside diameter and wall thickness may be used if they meet the following:
     - 46,000 PSI minimum yield strength
     - 62,000 PSI minimum tensile strength
     - 21% minimum elongation in 2"
   - Wall thickness (uncoated) shall be within the range of 0.248" to 0.304"
   - Outside diameter (uncoated) shall be within the range of 2.855" to 2.895"
   - Galvanization per ASTM A123
4. See the Traffic Operations Division website for detailed drawings of sign clamps and Texas Universal Triangular Slipbase System components. The website address is: ftp://ftp.dot.state.tx.us/pub/txdot-info/cmd/cserve/standard/traffic/slip.pdf
5. Sign supports shall not be spliced except where shown. Sign support posts shall not be spliced.

ASSEMBLY PROCEDURE

Foundation

1. Prepare 12-inch diameter by 42-inch deep hole. If solid rock is encountered, the depth of the foundation may be reduced such that it is embedded a minimum of 18 inches into the solid rock.
2. Thoroughly wet and mix concrete in a container. Place concrete into hole until it is approximately flush with the ground.
3. Push the pipe end of the slip base stub into the center of the concrete. Rotate the stub back and forth while pushing it down into the concrete to assure good contact between the concrete and stub. Continue to work the stub into the concrete until it is between 2 to 4 inches above the ground. The upper value assures that an impacting vehicle should not snag on the footing. The lower value provides clearance for assembly.
4. Plumb the stub by using a torpedo level on the slip plate. Allow concrete adequate time to set.

Support

1. Cut support so that the bottom of the sign will be 7 to 7.5 feet above the edge of the travelway (i.e., edge of the closest lane) when slip plate is below the edge of pavement or 7 to 7.5 feet above slip plate when the slip plate is above the edge of the travelway. The cut shall be plumb and straight.
2. Attach sign to support using connections shown. When multiple signs are installed on the same support, ensure the minimum clearance between each sign is maintained. See SMD(SLIP-2) for clearances based on sign types.
3. Slide the slipbase casting onto the lower end of the sign support.
4. Drive a chisel or a flat-blade screwdriver into the cut on the locking collar to slightly pry the collar open. Slide the collar onto the end of the pipe so the edge of the pipe is between the face of the locking collar and the end of the edge bevel. A dead-blow hammer may be useful in positioning the collar correctly. Remove the tool used to pry the collar open. Torque the allen bolt to 60 foot-pounds (720 inch-pounds). DO NOT OVERTIGHTEN.
5. Place and align bolt keeper plate on slip plate and lift assembled sign and support into position.
6. Place one washer on each bolt and insert them through keeper plate and the notches on the slip plate and casting. After inserting each bolt, place one washer and a nut on the bolt and hand-tighten all three.
7. The breakaway features of this system will work when all three bolts are tightened between 40 to 80 foot-pounds (480 to 960 inch-pounds). The Engineer shall determine the appropriate bolt torque for each project. Tighten all bolts by working around the support in approximately 10 foot-pound increments to assure a balanced tension in the bolts. All three bolts shall be torqued the same. DO NOT OVERTIGHTEN.

LEVELS DISPLAYED
ACC:

1	2	3	4	5	6	7	8	9	10	11	12	13	14	15	16
17	18	19	20	21	22	23	24	25	26	27	28	29	30	31	32
33	34	35	36	37	38	39	40	41	42	43	44	45	46	47	48
49	50	51	52	53	54	55	56	57	58	59	60	61	62	63	

STANDARD PLANS
Texas Department of Transportation
Traffic Operations Division

SIGN MOUNTING DETAILS SMALL ROADSIDE SIGNS TRIANGULAR SLIPBASE SYSTEM

SMD(SLIP-1)-02

© TxDOT July 2002

DN: BAS	CK: CRB	DW: FDN	CK: CAL

REVISIONS	STATE DISTRICT	FEDERAL REGION	FEDERAL AID PROJECT	SHEET
	6			259
COUNTY		CONTROL	SECTION	JOB	HIGHWAY
---	---	---	---	---	---

DISCLAIMER
The use of this standard is governed by the "Texas Engineering Practice Act". No warranty of any kind is made by TxDOT for any purpose whatsoever. TxDOT assumes no responsibility for the conversion of this standard to other formats or for incorrect results or damages resulting from its use.

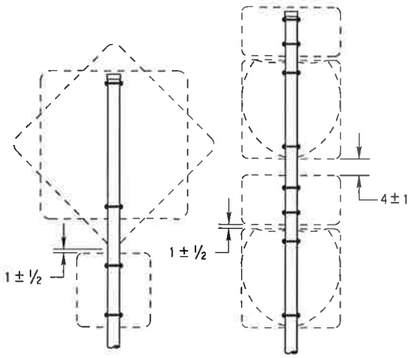

SM RD SGN ASSM TY XXXXX(1)XX(P)

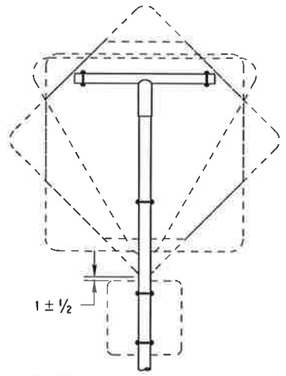

SM RD SGN ASSM TY XXXXX(1)XX(T)

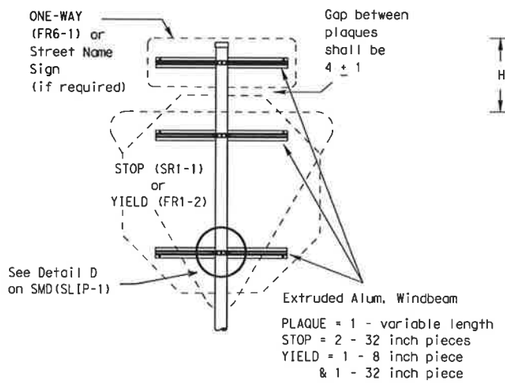

SM RD SGN ASSM TY XXXXX(1)XX(P-BM)

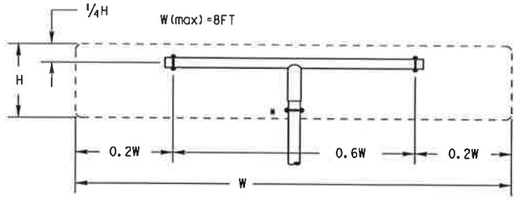

SM RD SGN ASSM TY XXXXX(1)XX(T)
(* - See Note 13)

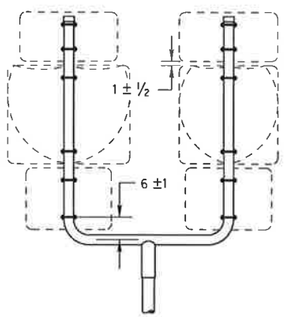

SM RD SGN ASSM TY XXXXX(1)XX(U)

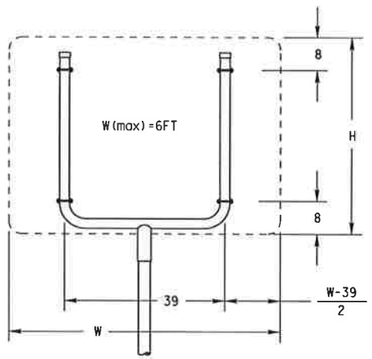

SM RD SGN ASSM TY XXXXX(1)XX(U)

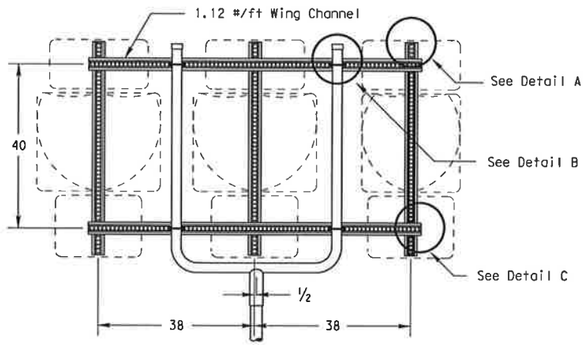

SM RD SGN ASSM TY XXXXX(1)XX(U-WC)
(See Note 12)

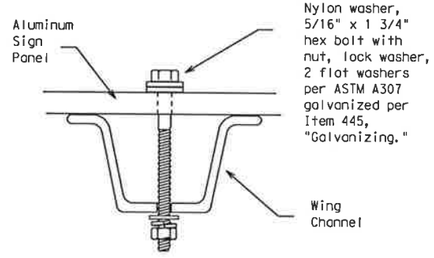

Top View

Detail A

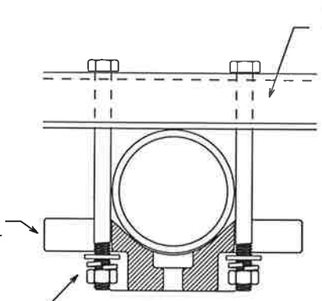

Top View

Detail B

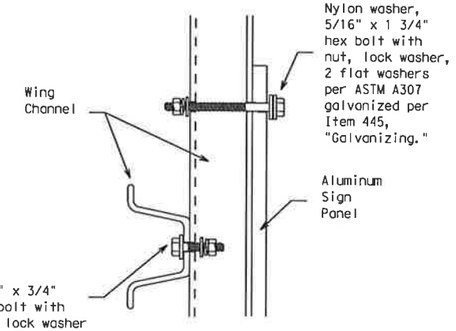

Side View

Detail C

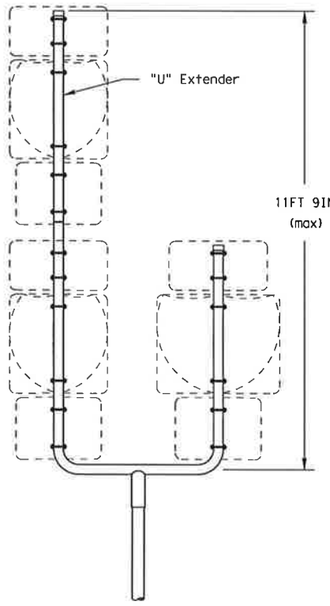

SM RD SGN ASSM TY S80(1)XX(U-1EXT)

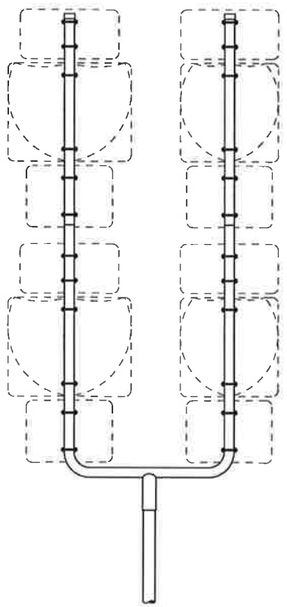

SM RD SGN ASSM TY S80(1)XX(U-2EXT)

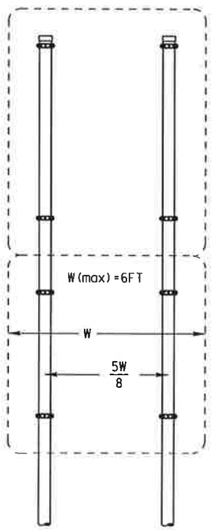

SM RD SGN ASSYM TY XXXXX(2)XX(P)

GENERAL NOTES:

1.

SIGN SUPPORT	# OF POSTS	MAX. SIGN AREA
10 BWG	1	16 SF
10 BWG	2	32 SF
Sch 80	1	32 SF
Sch 80	2	64 SF

2. The Engineer may require that a Schedule 80 post be used in place of a 10 BWG where a sign height is abnormally high due to a fill slope.
3. Sign supports shall not be spliced except where shown. Sign support posts shall not be spliced
4. Aluminum sign blanks shall conform to Departmental Material Specifications DMS-7110 and shall have the following minimum thicknesses: 0.080 for signs less than 7.5 sq. ft., 0.100 for signs 7.5 to 15 sq. ft., and 0.125 for signs greater than 15 sq. ft.
5. Plywood signs shall conform to Departmental Material Specification DMS-7100 and shall be 5/8 inches thick.
6. Signs that require specific supports due to reasons in addition to windloading are indicated on the "REQUIRED SUPPORT" table on this sheet.
7. For horizontal rectangular signs, T-brackets are used for signs 24 inches or less in height. U-brackets are used for signs of greater height.
8. When two triangular slipbase supports are used to support a single sign, they shall not be "rigidly" connected to each other except through the sign panel. This will allow each support to act independently when impacted by an errant vehicle.
9. Wing channel shall meet ASTM A 1011 SS Gr 50 and be galvanized per ASTM A 123.
10. Excess pipe, winged channel, or windbeam shall be cut off so that it does not extend beyond the sign panel (i.e., excess support shall not be visible when the sign is viewed from the front.) Repair galvanized coating at cut support ends per Item 445, "Galvanizing."
11. The Engineer may allow the use of an expanded foam foundation. A list of approved suppliers of expanding foam may be obtained from the Traffic Operations Division (TRF) or from the TRF website. The website address is: http://www.dot.state.tx.us/insdtdot/orgchart/trf/trfeng/
12. Additional route markers may be added vertically, provided the total sign area does not exceed the maximum allowable amount per Note 1.
13. Additional sign clamp required on the "T-bracket" post for 24 inch high signs. Place the clamp 3 inches above bottom of sign when possible.

REQUIRED SUPPORT

	SIGN DESCRIPTION	SUPPORT
Regulatory	48-inch STOP sign (SR1-1)	TY 10BWG(1)XX(T) TY 10BWG(1)XX(P-BM)
	60-inch YIELD sign (FR1-2)	TY 10BWG(1)XX(T) TY 10BWG(1)XX(P-BM)
	48x16-inch ONE-WAY sign (FR6-1)	TY 10BWG(1)XX(T) TY 10BWG(1)XX(P-BM)
	36x48, 48x36, and 48x48-inch signs	TY 10BWG(1)XX(T)
	48x60-inch signs	TY S80(1)XX(T)
Warning	48x48-inch signs (diamond or square)	TY 10BWG(1)XX(T)
	48x60-inch signs	TY S80(1)XX(T)
	48-inch Advance School X-ing sign (SS1-1)	TY 10BWG(1)XX(T)
	48-inch School X-ing sign (SS2-1)	TY 10BWG(1)XX(T)
	Large Arrow sign (W1-6 & W1-7)	TY 10BWG(1)XX(T)

STANDARD PLANS
Texas Department of Transportation
Traffic Operations Division

SIGN MOUNTING DEATAILS SMALL ROADSIDE SIGNS TRIANGULAR SLIPBASE SYSTEM

SMD(SLIP-2)-02

©TxDOT July 2002

DN: BAS	CK: GRB	DW: FDN	CK: CAL

REVISIONS	STATE DISTRICT	FEDERAL REGION	FEDERAL AID PROJECT	SHEET
		6		260

COUNTY	CONTROL	SECTION	JOB	HIGHWAY

LEVELS DISPLAYED
1 2 3 4 5 6 7 8 9 10 11 12 13 14 15 16
17 18 19 20 21 22 23 24 25 26 27 28 29 30 31 32
33 34 35 36 37 38 39 40 41 42 43 44 45 46 47 48
49 50 51 52 53 54 55 56 57 58 59 60 61 62 63

ACC:

"CONSTRUCTION RECORD DRAWINGS" 8-01-2009

DISCLAIMER
The use of this standard is governed by the "Texas Engineering Practice Act". No warranty of any kind is made by TxDOT for any purpose whatsoever. TxDOT assumes no responsibility for the conversion of this standard to other formats or for incorrect results or damages resulting from its use.

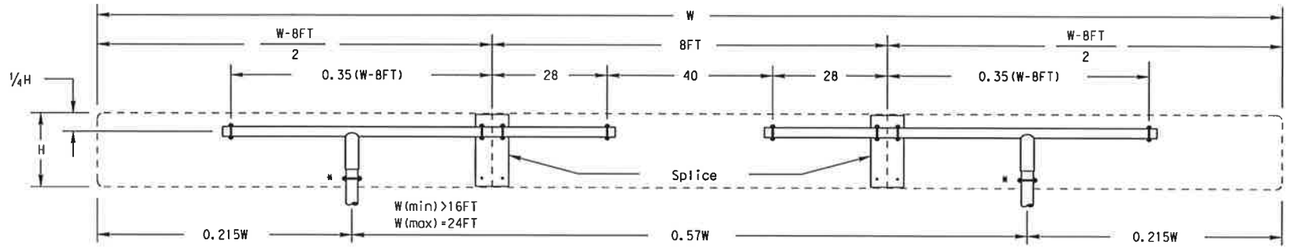

SM RD SGN ASSM TY XXXXX(2)XX(T-2EXT)
(* - See Note 13)

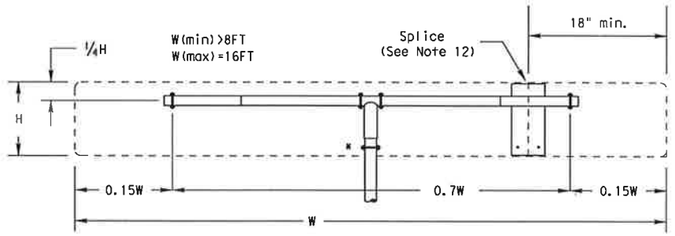

SM RD SGN ASSM TY XXXXX(1)XX(T-2EXT)
(* - See Note 13)

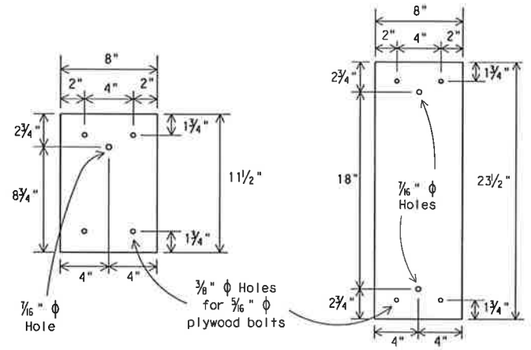

Splice Plates

Splice plates shall be 1/8 " steel plate (ASTM A36) or 1/8 " aluminum plate (ASTM B209 ALLOY 6061-T6 or 5052-H38). Steel shall be galvanized in accordance with ASTM A123.

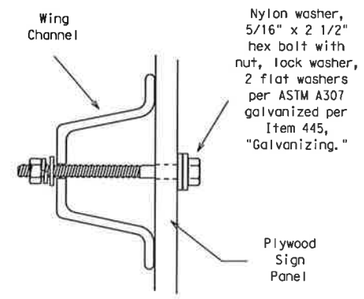

Side View

Detail B

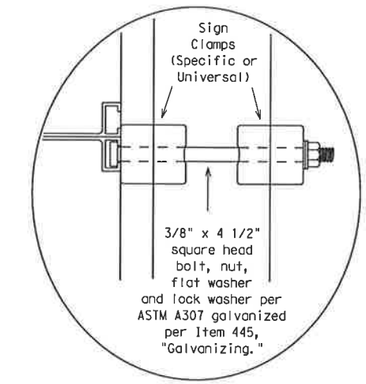

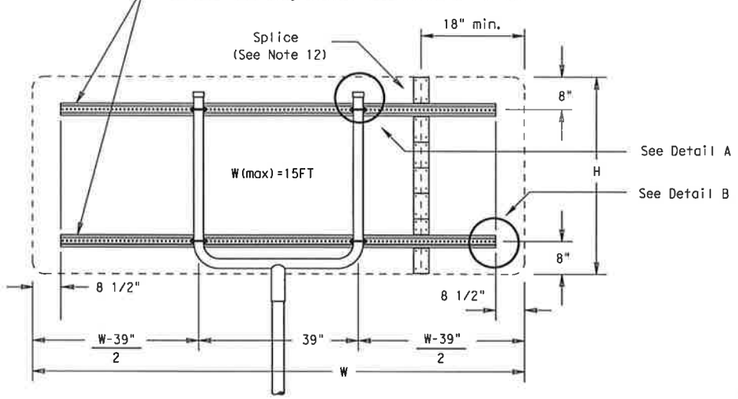

SM RD SGN ASSM TY XXXXX(1)XX(U-XX)

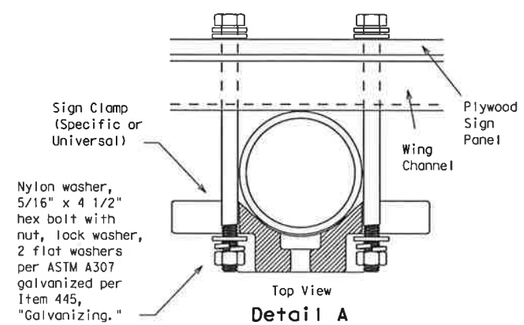

Detail A

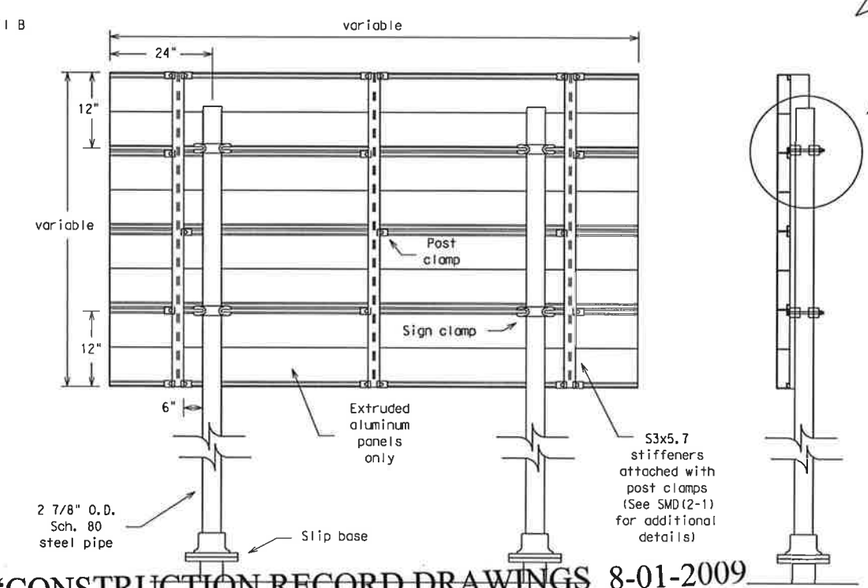

Typical Extruded Aluminum Sign Mount

SM RD SGN ASSM TY S80(2)XX(P-EXAL)

"CONSTRUCTION RECORD DRAWINGS" 8-01-2009

GENERAL NOTES:

1.

SIGN SUPPORT	# OF POSTS	MAX. SIGN AREA
10 BWG	1	16 SF
10 BWG	2	32 SF
Sch 80	1	32 SF
Sch 80	2	64 SF

2. The Engineer may require that a Schedule 80 post be used in place of a 10 BWG where a sign height is abnormally high due to a fill slope.
3. Sign supports shall not be spliced except where shown. Sign support posts shall not be spliced.
4. Aluminum sign blanks shall conform to Departmental Material Specifications DMS-7110 and shall have the following minimum thicknesses: 0.080 for signs less than 7.5 sq. ft., 0.100 for signs 7.5 to 15 sq. ft., and 0.125 for signs greater than 15 sq. ft.
5. Plywood signs shall conform to Departmental Material Specification DMS-7100 and shall be 5/8 inches thick.
6. Signs that require specific supports due to reasons in addition to windloading are indicated on the "REQUIRED SUPPORT" table on this sheet.
7. For horizontal rectangular signs, T-brackets are used for signs 24 inches or less in height. U-brackets are used for signs of greater height.
8. When two triangular slipbase supports are used to support a single sign, they shall not be "rigidly" connected to each other except through the sign panel. This will allow each support to act independently when impacted by an errant vehicle.
9. Wing channel shall meet ASTM A 1011 SS Gr 50 and be galvanized per ASTM A 123.
10. Excess pipe, winged channel, or windbeam shall be cut off so that it does not extend beyond the sign panel (i.e., excess support shall not be visible when the sign is viewed from the front.) Repair galvanized coating at cut support ends per Item 445, "Galvanizing."
11. The Engineer may allow the use of an expanded foam foundation. A list of approved suppliers of expanding foam may be obtained from the Traffic Operations Division (TRF) or from the TRF website. The website address is: http://www.dot.state.tx.us/insdtdot/orgchart/trf/trfeng/
12. Sign blanks shall be the sizes and shapes shown on the plans. Unless otherwise shown, no panel on multi-panel plywood signs shall have a dimension less than 18 inches. Plywood signs 4 feet by 8 feet or smaller in either dimension shall be of one piece construction.
13. Additional sign clamp required on the "T-bracket" post for 24 inch high signs. Place the clamp 3 inches above bottom of sign when possible.

REQUIRED SUPPORT

	SIGN DESCRIPTION	SUPPORT
Regulatory	48-inch STOP sign (SR1-1)	TY 10BWG(1)XX(T) TY 10BWG(1)XX(P-BM)
	60-inch YIELD sign (FR1-2)	TY 10BWG(1)XX(T) TY 10BWG(1)XX(P-BM)
	48x16-inch ONE-WAY sign (FR6-1)	TY 10BWG(1)XX(T) TY 10BWG(1)XX(P-BM)
	36x48, 48x36, and 48x48-inch signs	TY 10BWG(1)XX(T)
	48x60-inch signs	TY S80(1)XX(T)
Warning	48x48-inch signs (diamond or square)	TY 10BWG(1)XX(T)
	48x60-inch signs	TY S80(1)XX(T)
	48-inch Advance School X-ing sign (SS1-1)	TY 10BWG(1)XX(T)
	48-inch School X-ing sign (SS2-1)	TY 10BWG(1)XX(T)
	Large Arrow sign (W1-6 & W1-7)	TY 10BWG(1)XX(T)

STANDARD PLANS
Texas Department of Transportation
Traffic Operations Division

SIGN MOUNTING DETAILS SMALL ROADSIDE SIGNS TRIANGULAR SLIPBASE SYSTEM

SMD(SLIP-3)-02

© TxDOT July 2002	DN: BAS	CK: GRB	DW: FDN	CK: CAL
REVISIONS	STATE DISTRICT: 6	FEDERAL REGION	FEDERAL AID PROJECT	SHEET: 261
	COUNTY	CONTROL	SECTION	JOB / HIGHWAY

LEVELS DISPLAYED
1 2 3 4 5 6 7 8 9 10 11 12 13 14 15 16
17 18 19 20 21 22 23 24 25 26 27 28 29 30 31 32
33 34 35 36 37 38 39 40 41 42 43 44 45 46 47 48
49 50 51 52 53 54 55 56 57 58 59 60 61 62 63

ACC:

DISCLAIMER
The use of this standard is governed by the "Texas Engineering Practice Act". No warranty of any kind is made by TxDOT for any purpose whatsoever. TxDOT assumes no responsibility for the conversion of this standard to other formats or for incorrect results or damages resulting from its use.

Wedge Anchor System

SM RD SGN ASSM TY TWT(X)WA(P)

Universal Anchor System with Thin-Walled Tubing Post

SM RD SGN ASSM TY TWT(X)UA(P)

View A-A

Plastic insert must be used when using the TWT with either the Universal Anchor System or the Bolt Down Universal Anchor System. The insert should be approx. 10" long and cover the tubing from just above the top of the stub pipe to the bottom of the sign post when using the Universal Anchor System. The insert should be cut to approx. 4 1/2" when used with the Bolt Down Universal Anchor System.

Concrete anchor consists of 5/8" diameter stud bolt with UNC series bolt threads on the upper end. A heavy hex nut per ASTM A563 and hardened washer per ASTM F436. The stud bolt shall have minimum yield and ultimate tensile strengths of 50 and 75 ksi, respectively. Nuts, bolts and washers shall be galvanized per Item 445, "Galvanizing." Top of bolt shall extend at least flush with top of nut when installed. The anchor, when installed in 4000 psi normal-weight concrete with a 3 3/8" minimum embedment, shall have a minimum allowable tension and shear of 2450 and 1525 psi, respectively. Adhesive type anchors shall have stud bolts installed with Type III epoxy per DMS-6100, "Epoxies and Adhesives." Adhesive anchors may be loaded after adequate epoxy cure time per the manufacturer's recommendations.

SM RD SGN ASSM TY TWT(X)UB(P)

Sign Installation Using a Prefabricated T-Bracket for Thin-Wall Tubing Post

SM RD SGN ASSM TY TWT(X)XX(T)

(* - See General Note 6)

Detail A

SM RD SGN ASSM TY TWT(X)XX(T-2EXT)

(* - See General Note 6)

For horizontal rectangular signs, T-brackets may be used for signs up to 24" in height. Square footage of signs may not exceed 10 sf on this system.

Detail B

"CONSTRUCTION RECORD DRAWINGS_8-01-2009

Splice Plates

Splice plates shall be 1/8" steel plate (ASTM A36) or 1/8" aluminum plate (ASTM B209 ALLOY 6061-T6 or 5052-H38.) Steel shall be galvanized in accordance with ASTM A123.

GENERAL NOTES:

1. The Wedge Anchor System and the Universal Anchor System with thin wall tubing post may be used to support up to 10 square feet of sign area.
2. The tubular socket, wedge and prefabricated T-bracket shall be permanently marked to indicate manufacturer. Method, design, and location of marking are subject to the approval of the TxDOT Traffic Standards Engineer.
3. Except for posts (13 BWG Tubing), clamps, nuts and bolts, all components shall be prequalified. A list of prequalified vendors may be obtained from the TxDOT Traffic Standards Engineer, or the Traffic Operations Division website. The website address is: http://www.dot.state.tx.us/insdtdot/orgchart/trf/trfeng
4. Material used as post with this system shall conform to the following specifications:
   13 BWG Tubing (2.375" outside diameter)
   0.095" nominal wall thickness
   Seamless or electric-resistance welded steel tubing
   Steel shall be HSLAS Gr 55 per ASTM A1011 or ASTM A1008
   Other steels may be used if they meet the following:
   55,000 PSI minimum yield strength
   70,000 PSI minimum tensile strength
   18% minimum elongation in 2"
   Wall thickness (uncoated) shall be within the range of .083" to .099"
   Outside diameter (uncoated) shall be within the range of 2.369" to 2.381"
   Galvanization per ASTM 123 or ASTM A653 G210. For precoated steel tubing (ASTM A653), recoat tube outside diameter weld seam by metallizing with zinc wire per ASTM B833.
5. Sign blanks shall be the sizes and shapes shown on the plans. Unless otherwise shown, no panel on multipanel plywood signs shall have a dimension less than 18 inches. Plywood signs 4 feet by 8 feet or smaller in either dimension shall be of one piece construction.
6. Additional sign clamp required on the "T-bracket" post for 24" high signs. Place clamp at least 3" above bottom of sign when possible.
7. Sign supports shall not be spliced except where shown. Sign support posts shall not be spliced.
8. See the Traffic Operations Division website for detailed drawings of sign clamps and Wedge Anchor System components. The website address is: ftp://ftp.dot.state.tx.us/pub/txdot-info/cmd/cserve/standard/traffic/slip.pdf

WEDGE ANCHOR SYSTEM INSTALLATION PROCEDURE

1. Dig foundation hole. Where solid rock is encountered at ground level, the foundation shall be a minimum depth of 18". When solid rock is encountered below ground level, the foundation shall extend in the solid rock a minimum depth of 18" or provide a minimum foundation depth of 30". If solid rock is encountered, the socket/stub may be reduced in length as required to a minimum length of 18". Any material removed from the socket/stub shall be from the bottom and the clearance requirements given on SMD(GEN) must be followed. The inner surfaces of the socket/stub must remain free of concrete or other debris.
2. Thoroughly wet and mix concrete in a container. Place concrete into hole until it is approximately flush with the ground.
3. Insert tubular socket into concrete until top of socket is approximately 1/4 " above the concrete footing.
4. Plumb the socket and allow concrete adequate time to set.
5. Attach the sign to the sign post.
6. Insert the sign post into socket and align sign face with roadway.
7. Drive the wedge into the socket to secure post. This will leave approximately 3 inches of the wedge exposed.

UNIVERSAL ANCHOR SYSTEM INSTALLATION PROCEDURE

1. Dig foundation hole. Where solid rock is encountered at ground level, the foundation shall be a minimum depth of 18". When solid rock is encountered below ground level, the foundation shall extend in the solid rock a minimum depth of 18" or provide a minimum foundation depth of 30". If solid rock is encountered, the socket/stub may be reduced in length as required to a minimum length of 18". Any material removed from the socket/stub shall be from the bottom and the clearance requirements given on SMD(GEN) must be followed. The inner surfaces of the socket/stub must remain free of concrete or other debris.
2. Insert base post in hole to depths shown and backfill hole with concrete.
3. Level and plumb the base post using a torpedo level and allow concrete adequate time to set. The bottom of the slots provided in the stub pipe shall remain above the top of the concrete foundation.
4. Attach the sign to the sign post.
5. Install plastic insert around bottom of post.
6. Insert sign post into base post. Lower until the post comes to rest on steel rod.
7. Seat compression ring using a hammer. Typically, the top of compression ring will be approximately level with top of stub post when optimally installed.
8. Check sign post by hand to ensure it is unable to turn. If loose, increase the tightening of the compression ring.

STANDARD PLANS
TEXAS DEPARTMENT OF TRANSPORTATION
Traffic Operations Division

SIGN MOUNTING DETAILS SMALL ROADSIDE SIGNS WEDGE & UNIVERSAL ANCHOR WITH THIN WALL TUBING POST

SMD(TWT)-02

©TxDOT July 2002	DN: BAS	CK: GRB	DW: FDN	CK: CAL
REVISIONS	STATE DISTRICT	FEDERAL REGION: 6	FEDERAL AID PROJECT	SHEET 262
	COUNTY	CONTROL	SECTION	JOB	HIGHWAY

DISCLAIMER
The use of this standard is governed by the "Texas Engineering Practice Act". No warranty of any kind is made by TxDOT for any purpose whatsoever. TxDOT assumes no responsibility for the conversion of this standard to other formats or for incorrect results or damages resulting from its use.

REQUIREMENTS FOR REGULATORY SIGNS

TYPICAL EXAMPLES

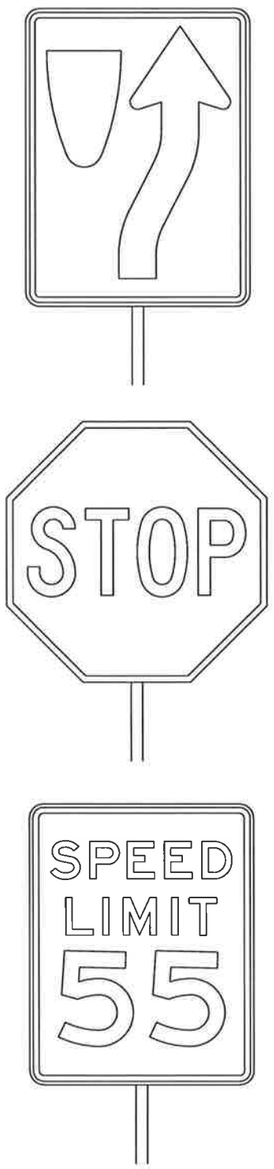

DEPARTMENT MATERIAL SPECIFICATIONS

PLYWOOD SIGN BLANKS DMS-7100
ALUMINUM SIGN BLANKS DMS-7110

Square Ft.	Min. Thickness
Less than 7.5	0.080
7.5 to 15	0.100
Greater than 15	0.125

FLAT SURFACE REFLECTIVE SHEETING DMS-8300
VINYL NON-REFLECTIVE DECAL SHEETING DMS-8320

USAGE	COLOR	SIGN SHEETING
BACKGROUND	ALL	TYPE C (HIGH SPECIFIC INTENSITY)
LEGEND & BORDERS	WHITE	TYPE C (HIGH SPECIFIC INTENSITY)
LEGEND & BORDERS	BLACK	VINYL NON-REFLECTIVE DECAL SHEETING

GENERAL NOTES:

1. Signs to be furnished, should be as detailed elsewhere in the plans and/or as shown on sign tabulation sheet. Standard sign designs and arrow dimensions can be found in the "Standard Highway Sign Designs for Texas" (SHSD).
2. Regulatory sign legends shall use the Federal Highway Administration (FHWA) Standard Highway Alphabets (B, C, D, E, Emod or F).
3. Lateral spacing between letters and numerals shall conform with the SHSD, and any approved changes thereto. Lateral spacing of legends shall provide a balanced appearance when spacing is not shown.
4. Black legend shall be applied by screening process or cut-out vinyl non-reflective decal sheeting to white background sheeting, or combination thereof.
5. White legends shall be applied by screening process with transparent colored ink, transparent colored overlay film to white background sheeting or cut-out white sheeting to colored background sheeting, or combination thereof.
6. Colored legends shall be applied by screening process with transparent colored ink, transparent colored overlay film or colored sheeting to white background sheeting, or combination thereof.
7. Sign substrate shall be any material that meets the Department Material Specification requirements for permanent sign substrates.
8. Requirements for attachments are found on Standard Plan Sheet TSR(2).
9. Mounting details for roadside mounted signs are shown in the "SMD series" Standard Plan Sheets.

REQUIREMENTS FOR WARNING SIGNS

TYPICAL EXAMPLES

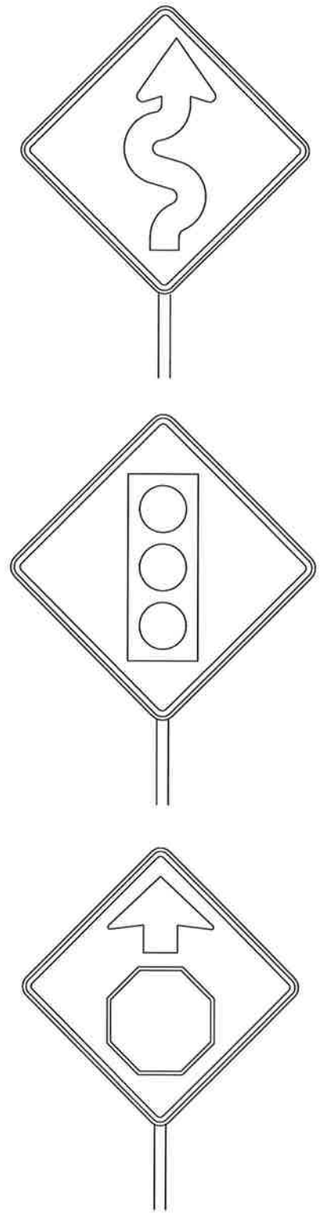

DEPARTMENT MATERIAL SPECIFICATIONS

ALUMINUM SIGN BLANKS DMS-7110

Square Ft.	Min. Thickness
Less than 7.5	0.080
7.5 to 15	0.100
Greater than 15	0.125

FLAT SURFACE REFLECTIVE SHEETING DMS-8300
VINYL NON-REFLECTIVE DECAL SHEETING DMS-8320

USAGE	COLOR	SIGN SHEETING
BACKGROUND	YELLOW	TYPE E (FLUORESCENT PRISMATIC)
LEGEND & BORDERS	BLACK	VINYL NON-REFLECTIVE DECAL SHEETING
LEGEND	ALL OTHER	TYPE D (NON-FLUORESCENT PRISMATIC) (Type VIII or Type IX only)

GENERAL NOTES:

1. Signs to be furnished, should be as detailed elsewhere in the plans and/or as shown on sign tabulation sheet. Standard sign designs and arrow dimensions can be found in the "Standard Highway Sign Designs for Texas" (SHSD).
2. Warning sign legends shall use the Federal Highway Administration (FHWA) Standard Highway Alphabets (B, C, D, E, Emod or F).
3. Lateral spacing between letters and numerals shall conform with the SHSD, and any approved changes thereto. Lateral spacing of legends shall provide a balanced appearance when spacing is not shown.
4. Black legend shall be applied by screening process or cut-out vinyl non-reflective decal sheeting to background sheeting, or combination thereof.
5. Colored legends shall be applied by screening process with transparent colored ink, transparent colored overlay film or colored sheeting to white background sheeting, or combination thereof.
6. Requirements for attachments are found on Standard Plan Sheet TSR(2).
7. Mounting details for roadside mounted signs are shown in the "SMD series" Standard Plan Sheets.

The Standard Highway Sign Designs for Texas (SHSD) can be found at the following website.

ftp://ftp.dot.state.tx.us/pub/txdot-info/trf/shsd/Navigate.pdf

LEVELS DISPLAYED ACC:

1	2	3	4	5	6	7	8	9	10	11	12	13	14	15	16
17	18	19	20	21	22	23	24	25	26	27	28	29	30	31	32
33	34	35	36	37	38	39	40	41	42	43	44	45	46	47	48
49	50	51	52	53	54	55	56	57	58	59	60	61	62	63	

STANDARD PLANS
Texas Department of Transportation
Traffic Operations Division

TYPICAL SIGN REQUIREMENTS

TSR(5)-03

© TxDOT October 2003	DN: BAS	CK: GRB	DW: FDN	CK: CAL
REVISIONS 12-03	STATE DISTRICT	FEDERAL REGION 6	FEDERAL AID PROJECT	SHEET 263
	COUNTY	CONTROL	SECTION	JOB / HIGHWAY

"CONSTRUCTION RECORD DRAWINGS_8-01-2009

P-200612-01

A. GENERAL SITE DATA

1. PROJECT LIMITS: *Dallas Parkway East Service Road Stations 1638+38.53 to 1964+90.22.*

2. PROJECT SITE MAPS:

- *Project Location Map: See Title Sheet*
- *Drainage Patterns: Drainage Area Maps (Offsite Drainage Area Maps: Sheets - ; Roadway Drainage Area Maps: Sheets -)*
- *Slopes Anticipated After Major Gradings or Areas of Soil Disturbance: Typical Sections (Sheets -)*
- *Location of Erosion and Sediment Controls: SW3P Site Maps (Sheets -)*
- *Surface Waters and Discharge Locations: Drainage and Culvert Layouts (Sheets -)*
- *Project Specific Locations: To be specified by the Contractor during construction and located in the Project SW3P File. Reference item #10 below.*

3. PROJECT DESCRIPTION:

CONSTRUCT TWO LANE SERVICE ROAD ON NEW LOCATION CONSISTING OF GRADING, DRAINAGE, STRUCTURES, CONCRETE & ASPHALT PAVEMENTS, SIGNING, AND PAVEMENT MARKINGS.

4. MAJOR SOIL DISTURBING ACTIVITIES:

GRADING, EXCAVATION AND EMBANKMENT FOR THE ROADWAY, STRUCTURES, INLETS & STORM SEWER INSTALLATION, AND TOPSOIL WORK FOR FINAL SODDING & SEEDING.

5. EXISTING CONDITION OF SOIL & VEGETATIVE COVER AND % OF EXISTING VEGETATIVE COVER:

THE SURFACE SOILS CONSIST OF ALLUVIAL STRATUM CONTAINING MOSTLY DARK GRAY AND YELLOW-BROWN, STIFF TO HARD HIGHLY PLASTIC CLAYS.

6. TOTAL PROJECT AREA: *95.0* Acres

7. TOTAL AREA TO BE DISTURBED: *85.5* Acres (90%)

8. WEIGHTED RUNOFF COEFFICIENT

BEFORE CONSTRUCTION: *0.30*
AFTER CONSTRUCTION: *0.75*

9. NAME OF RECEIVING WATERS:

THE DRAINAGE AREAS OF THIS PROJECT ENTER THE STORM SEWER SYSTEMS THROUGH INLETS AND OUTFALL TO LAKE LEWISVILLE VIA DOE BRANCH, AND BUTTON BRANCH.

10. PROJECT SW3P FILE:

For projects disturbing one acre or more, the Contractor shall will maintain a SW3P file at the project field office which contains the following: Index Sheet, TCEQ N.O.I., TCEQ Signature Authority, TCEQ Fee Payment Form, TPDES Storm Water Program or Construction Site Notice, TPDES Permit Coverage Notice, SW3P Inspector Qualification Statements, Inspection and Maintenance Reports, Required Location Maps, Stored Materials List specifying associated control measures, and the Appendix, which contains the TPDES Construction General Permit Language and the Contractor's PSL Permits.

B. EROSION AND SEDIMENT CONTROLS

1. SOIL STABILIZATION PRACTICES: (Select T = Temporary or P = Permanent, as applicable)

T	TEMPORARY SEEDING	T	PRESERVATION OF NATURAL RESOURCES
T	MULCHING (Hay or Straw)	T	FLEXIBLE CHANNEL LINER
___	BUFFER ZONES	___	RIGID CHANNEL LINER
___	PLANTING	P	SOIL RETENTION BLANKET
P	SEEDING	___	COMPOST MANUFACTURED TOPSOIL
___	SODDING	___	OTHER:

2. STRUCTURAL PRACTICES: (Select T = Temporary or P = Permanent, as applicable)

- T SILT FENCES
- ___ EROSION CONTROL COMPOST LOGS
- ___ EROSION CONTROL COMPOST BERMS (Low Velocity)
- T/P ROCK FILTER DAMS
- ___ DIVERSION, INTERCEPTOR, OR PERIMETER DIKES
- ___ DIVERSION, INTERCEPTOR, OR PERIMETER SWALES
- ___ DIVERSION DIKE AND SWALE COMBINATIONS
- ___ PIPE SLOPE DRAINS
- ___ PAVED FLUMES
- T ROCK BEDDING AT CONSTRUCTION EXIT
- ___ TIMBER MATTING AT CONSTRUCTION EXIT
- ___ CHANNEL LINERS
- ___ SEDIMENT TRAPS
- ___ SEDIMENT BASINS
- T STORM INLET SEDIMENT TRAP
- P STONE OUTLET STRUCTURES
- P CURBS AND GUTTERS
- P STORM SEWERS
- ___ VELOCITY CONTROL DEVICES
- OTHER:

3. STORM WATER MANAGEMENT:

1. Storm water drainage will be provided by ditches, inlets, and storm water systems which carry drainage within the R.O.W. to the lows within the roadway and project site which drains to natural facilities.

2. Other permanent erosion controls include hydraulic design to limit structure outlet velocities and grading design generally consisting of 4 : 1 or flatter slopes with permanent vegetative cover.

4. STORM WATER MANAGEMENT ACTIVITIES: (Sequence of Construction)

1. *INSTALL PERIMETER CONTROL OF SILT FENCES*
2. *COMPLETE THE CONSTRUCTION OF THE STORM SEWER & CULVERTS*
3. *COMPLETE THE CONSTRUCTION OF CONCRETE & ASHPALT PAVEMENT STRUCTURES*
4. *WHEN ALL CONSTRUCTION IS COMPLETE AND THE SITE IS STABILIZED AND APPROVED BY THE ENGINEER, REMOVE ALL SILT FENCES*

5. NON-STORM WATER DISCHARGES:

Filter non-storm water discharges, or hold in retention basins, before being allowed to mix with storm water. These discharges consist of non-polluted ground water, spring water, foundation and/or footing drain water; and water used for dust control, pavement washing and vehicle washwater containing no detergents.

C. OTHER REQUIREMENTS & PRACTICES

1. MAINTENANCE:

Maintain all erosion and sediment controls in good working order. Perform any necessary repairs at the earliest date possible but no later than 7 calendar days after the surrounding exposed ground has dried sufficiently to prevent further damage from heavy equipment. Stabilize disturbed areas on which construction activities have ceased, temporarily or permanently, within 14 calendar days unless they are scheduled to and do resume within 21 calendar days. The areas adjacent to creeks and drainageways have priority followed by devices protecting storm sewer inlets.

2. INSPECTION:

The owner's Inspector will perform a regularly scheduled SW3P Inspection every 14 calendar days. An Inspection and Maintenance Report, signed by the owner's Inspector and the Contractor, will be filed for each Inspection. Revise and/or repair each BMP control device in accordance with the current Inspection and Maintenance Report and item #1 above.

3. WASTE MATERIALS:

On a regular basis, or as may be directed, collect all waste materials, trash and debris from the construction site and deposit into a metal dumpster having a secure cover and which meets all state and local city solid waste management requirements. Empty the dumpster as required by regulation, or as may be directed, at a local approved landfill site. Do not bury construction waste on the construction project site.

4. HAZARDOUS WASTE & SPILL REPORTING:

As a minimum, any products in the following categories are considered to be hazardous: Paints, Acids, Solvents, Fuels, Asphalt Products, Chemical Additives for Soil Stabilization, and Concrete Curing Compounds or Additives. When storing hazardous material on the project site, or at a Project Specific Location, take all practicable precaution to prevent and/or contain any spillage of these materials. In the event of a spill, contact the spill coordinator immediately.

5. SANITARY WASTE:

Use a licensed sanitary waste management contractor to collect all sanitary waste from portable units as may be required by local regulation, or as directed.

6. OFFSITE VEHICLE TRACKING:

On a regular basis, or as may be directed, dampen haul roads for dust control and stabilize construction entrances/exits. Provide for a motorized broom or vacuum type sweeper to be avilable on a weekly basis, or as may be directed, to remove sediment from paved roadways abutting or transversing the project site.

7. MANAGEMENT PRACTICES:

1. Construct disposal areas, stockpiles and haul roads in a manner that will minimize and control the amount of sediment that may enter receiving waters. Do not locate disposal areas in any wetland, waterbody or streambed.
2. Locate construction staging areas and vehicle maintenance areas in a manner to minimize the runoff of pollutants.
3. When working in or near a wetland, install and maintain operating soil erosion and sediment controls at all times during construction and isolate the work from the wetland.
4. Clear all waterways as soon as practicable of temporary embankment, temporary bridges, matting, falsework, piling, debris or other obstructions placed during construction operations that are not a part of the finished work.

"CONSTRUCTION RECORD DRAWINGS_8-01-2009

STATE OF TEXAS
DENNIS D. SATRE
71590
REGISTERED PROFESSIONAL ENGINEER
12/28/06

NO.	DATE	REVISION	APPROV.

DALLAS PARKWAY EXTENSION

COLLIN COUNTY

STORM WATER POLLUTION PREVENTION PLAN (SW3P)
DATA SHEET

Halff Associates, Inc.
ENGINEERS · ARCHITECTS · SCIENTISTS · PLANNERS · SURVEYORS

DRAWN ML DATE DEC 2006 | DESIGNED ML DATE DEC 2006
CHECKED DDS DATE | SCALE NTS

BOND PROJECT NO. 03-13 SHEET 264 OF 271

P-200612.01

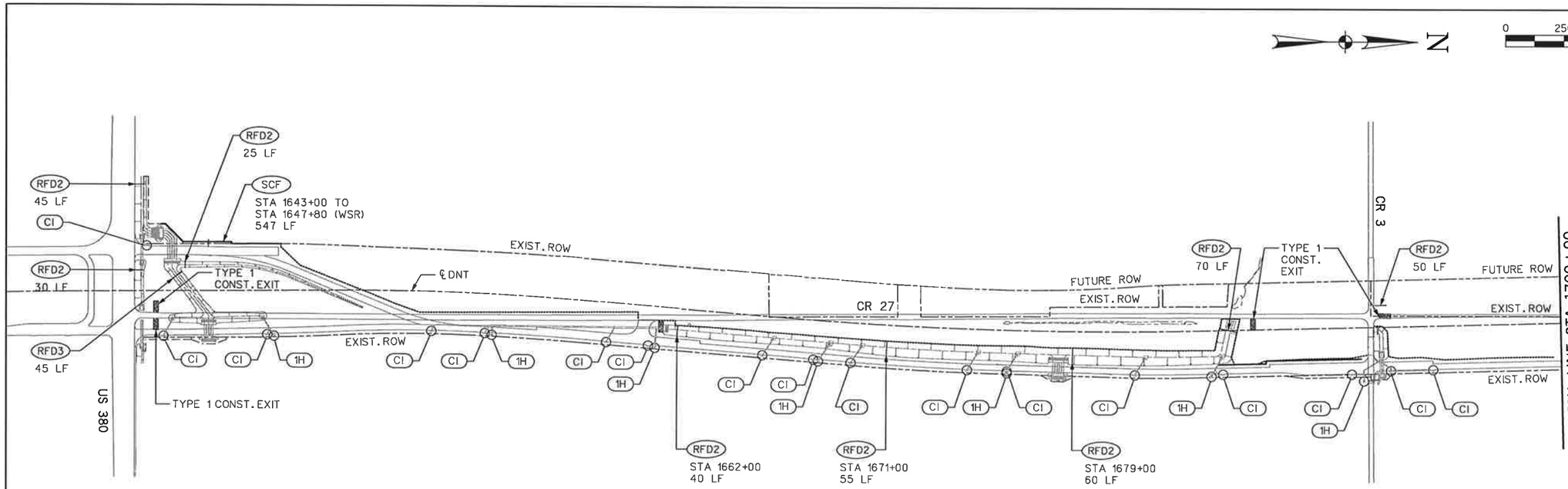

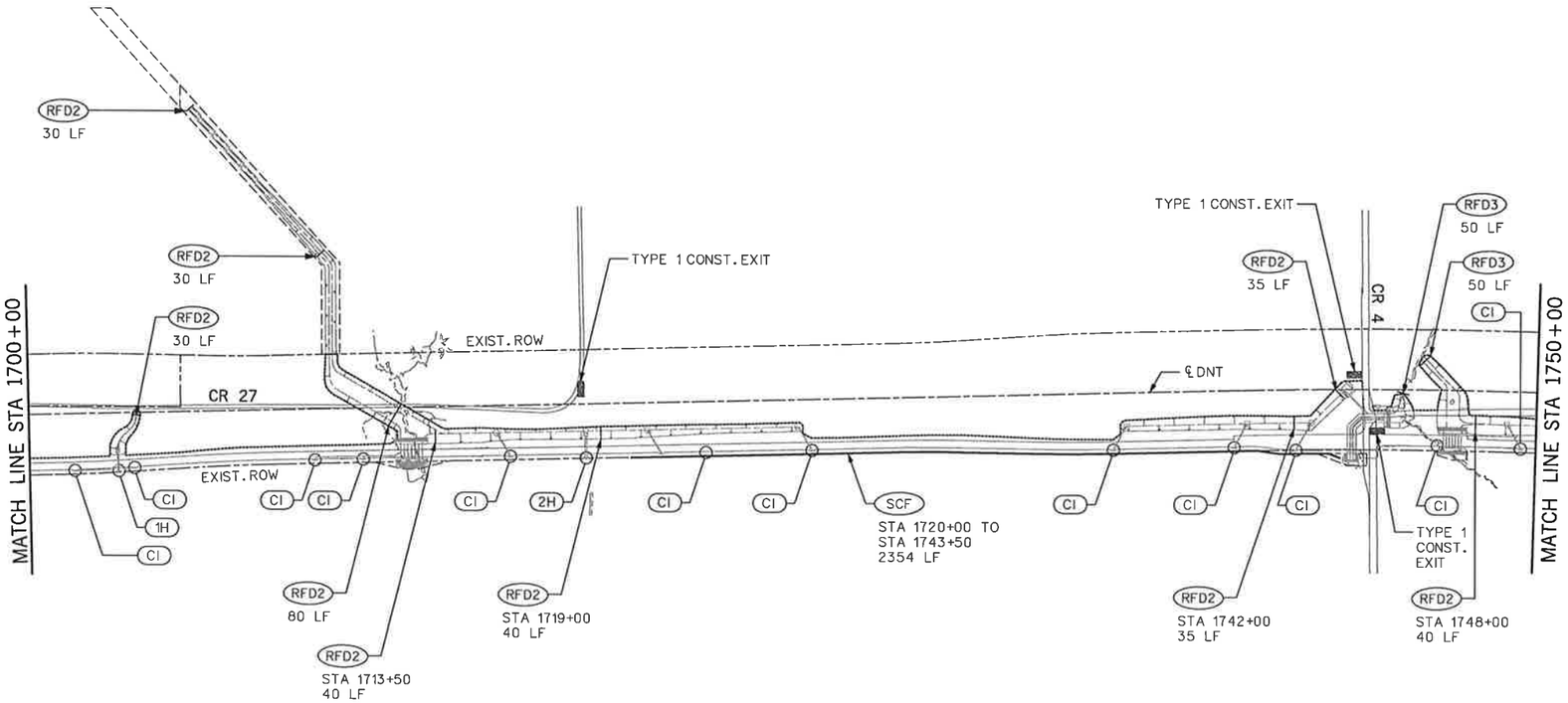

N

0 250 500 750 1000 1500
SCALE IN FEET

LEGEND

- SEDIMENT CONTROL FENCE — SCF
- TYPE 1 ROCK FILTER DAM — RFD1
- TYPE 2 ROCK FILTER DAM — RFD2
- TYPE 3 ROCK FILTER DAM — RFD3
- TYPE 1 CONSTRUCTION EXIT
- PAY LIMITS FOR TOPSOIL & GRASSING

EROSION CONTROL FOR INLETS:

(CI) 10' CURB INLET
1. INSTALL 40 LF SCF AROUND INLET BOTTOM.
2. REMOVE 40 LF SCF PRIOR TO CONSTRUCTION OF INLET WALLS AND TOP.
3. CONSTRUCT SEDIMENT TRAP (ST-CI) AROUND INLET OPENING.

(1H) HORIZ INLET TYPE H (MOD.)
1. INSTALL 60 LF SCF AROUND INLET BOTTOM.
2. REMOVE 60 LF SCF PRIOR TO CONSTRUCTION OF INLET WALLS AND TOP.
3. INSTALL 60 LF SCF AROUND INLET OPENING UNTIL PROJECT COMPLETION.

(2H) 2-HORIZ INLETS TYPE H (MOD.)
1. INSTALL 70 LF SCF AROUND INLET BOTTOM.
2. REMOVE 70 LF SCF PRIOR TO CONSTRUCTION OF INLET WALLS AND TOP.
3. INSTALL 70 LF SCF AROUND INLET OPENING UNTIL PROJECT COMPLETION.

NOTES:

1. DESIGNATED ROCK FILTER DAMS SHALL BE LEFT IN PLACE FOLLOWING THE COMPLETION OF CONSTRUCTION.

2. PAY LIMITS OF TOPSOIL AND GRASSING SHALL BE BETWEEN THE LINE SHOWN AND THE EAST R.O.W. OR EASEMENT LINE.

3. CONST. EROSION CONTROL BLANKET IN ALL V-DITCH SECTIONS 8' UP EACH SIDE, MEASURED ALONG SLOPE.

STATE OF TEXAS
DENNIS D. SATRE
71590
REGISTERED PROFESSIONAL ENGINEER
12/28/06

NO.	DATE	REVISION	APPROV.

DALLAS PARKWAY EXTENSION

COLLIN COUNTY

SW3P LAYOUT

1 OF 3

Halff Associates, Inc.
ENGINEERS · ARCHITECTS · SCIENTISTS · PLANNERS · SURVEYORS

DRAWN MDB DATE DEC 2006 DESIGNED DDS DATE
CHECKED DDS DATE SCALE

BOND PROJECT NO. 03-13 SHEET 265 OF 271

P-200612-01

"CONSTRUCTION RECORD DRAWINGS_8-01-2009

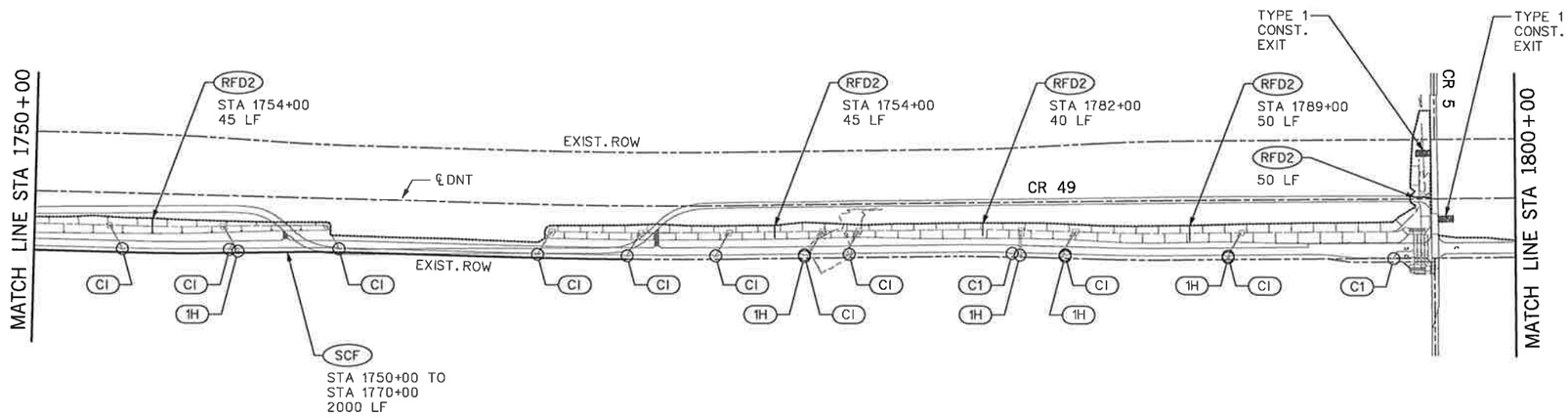

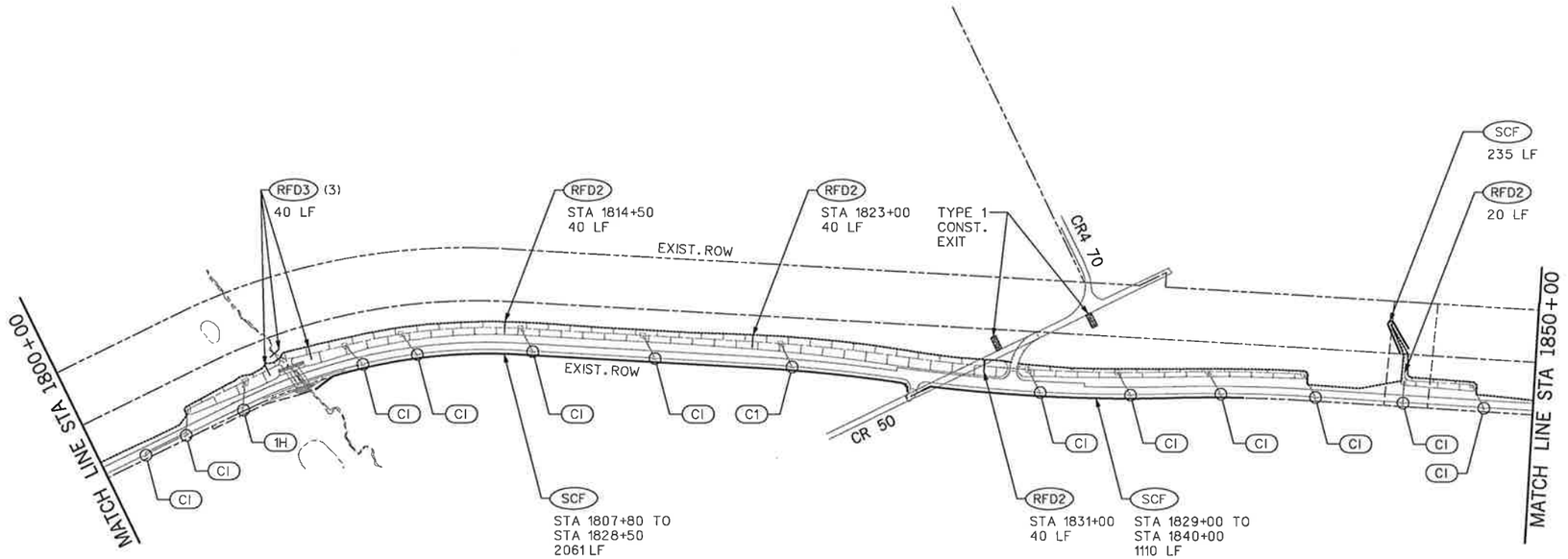

LEGEND

- SEDIMENT CONTROL FENCE — SCF
- TYPE 1 ROCK FILTER DAM — RFD1
- TYPE 2 ROCK FILTER DAM — RFD2
- TYPE 3 ROCK FILTER DAM — RFD3
- TYPE 1 CONSTRUCTION EXIT
- PAY LIMITS FOR TOPSOIL & GRASSING

EROSION CONTROL FOR INLETS:

(CI) 10' CURB INLET
1. INSTALL 40 LF SCF AROUND INLET BOTTOM.
2. REMOVE 40 LF SCF PRIOR TO CONSTRUCTION OF INLET WALLS AND TOP.
3. CONSTRUCT SEDIMENT TRAP (ST-CI) AROUND INLET OPENING.

(1H) HORIZ INLET TYPE H (MOD.)
1. INSTALL 60 LF SCF AROUND INLET BOTTOM.
2. REMOVE 60 LF SCF PRIOR TO CONSTRUCTION OF INLET WALLS AND TOP.
3. INSTALL 60 LF SCF AROUND INLET OPENING UNTIL PROJECT COMPLETION.

(2H) 2-HORIZ INLETS TYPE H (MOD.)
1. INSTALL 70 LF SCF AROUND INLET BOTTOM.
2. REMOVE 70 LF SCF PRIOR TO CONSTRUCTION OF INLET WALLS AND TOP.
3. INSTALL 70 LF SCF AROUND INLET OPENING UNTIL PROJECT COMPLETION.

NOTES:

1. DESIGNATED ROCK FILTER DAMS SHALL BE LEFT IN PLACE FOLLOWING THE COMPLETION OF CONSTRUCTION.

2. PAY LIMITS OF TOPSOIL AND GRASSING SHALL BE BETWEEN THE LINE SHOWN AND THE EAST R.O.W. OR EASEMENT LINE.

3. CONST. EROSION CONTROL BLANKET IN ALL V-DITCH SECTIONS 8' UP EACH SIDE, MEASURED ALONG SLOPE.

NO.	DATE	REVISION	APPROV.

DALLAS PARKWAY EXTENSION

COLLIN COUNTY, TX

SW3P LAYOUT

2 OF 3

Halff Associates, Inc.
ENGINEERS · ARCHITECTS · SCIENTISTS · PLANNERS · SURVEYORS

DRAWN MDB	DATE DEC 2006	DESIGNED DDS	DATE
CHECKED DDS	DATE	SCALE	

BOND PROJECT NO. 03-13 SHEET 266 OF 271

"CONSTRUCTION RECORD DRAWINGS _8-01-2009

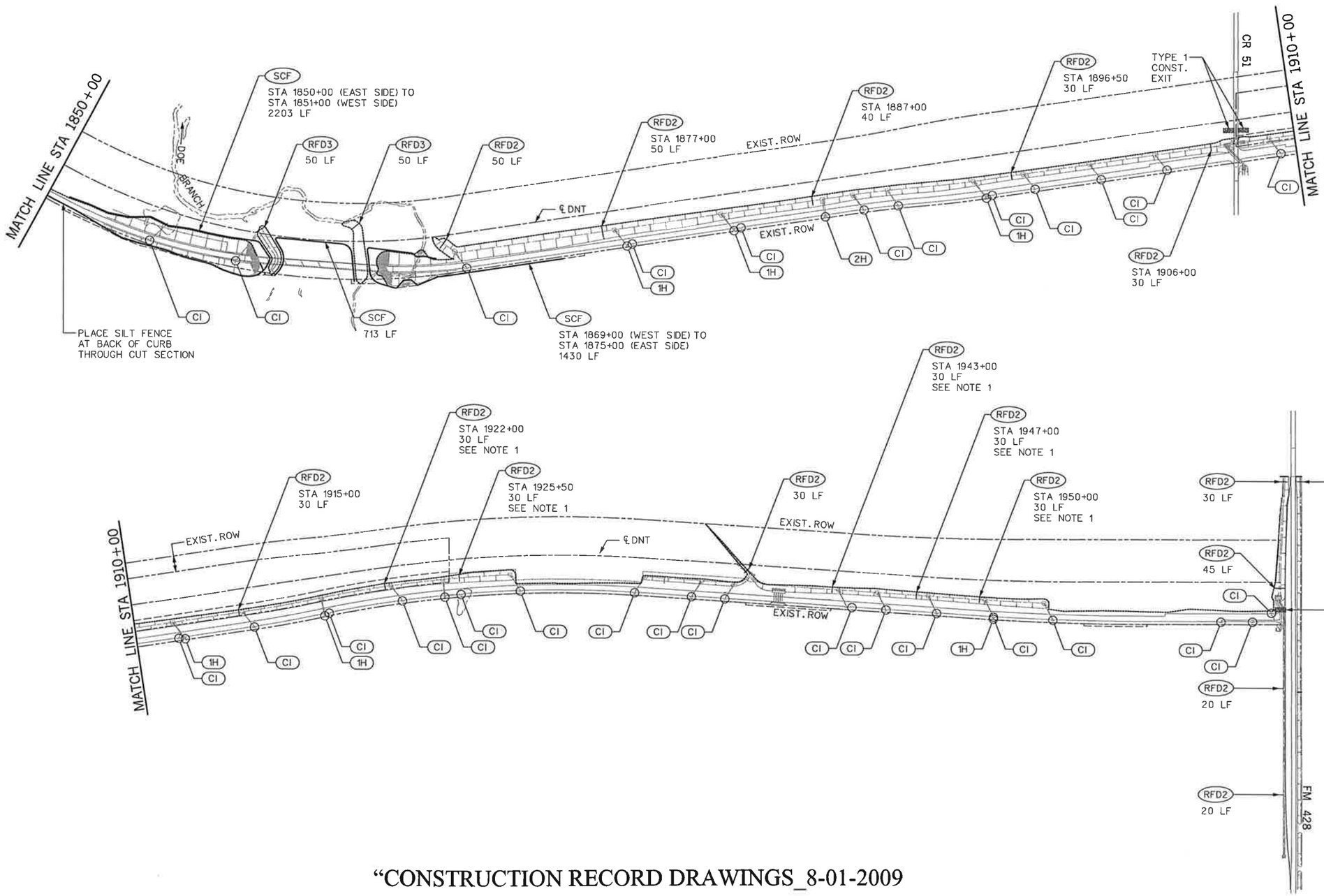

N

0 250 500 750 1000 1500

SCALE IN FEET

LEGEND

- SEDIMENT CONTROL FENCE — SCF
- TYPE 1 ROCK FILTER DAM — RFD1
- TYPE 2 ROCK FILTER DAM — RFD2
- TYPE 3 ROCK FILTER DAM — RFD3
- TYPE 1 CONSTRUCTION EXIT
- PAY LIMITS FOR TOPSOIL & GRASSING

EROSION CONTROL FOR INLETS:

(CI) 10' CURB INLET
1. INSTALL 40 LF SCF AROUND INLET BOTTOM.
2. REMOVE 40 LF SCF PRIOR TO CONSTRUCTION OF INLET WALLS AND TOP.
3. CONSTRUCT SEDIMENT TRAP (ST-CI) AROUND INLET OPENING.

(1H) HORIZ INLET TYPE H (MOD.)
1. INSTALL 60 LF SCF AROUND INLET BOTTOM.
2. REMOVE 60 LF SCF PRIOR TO CONSTRUCTION OF INLET WALLS AND TOP.
3. INSTALL 60 LF SCF AROUND INLET OPENING UNTIL PROJECT COMPLETION.

(2H) 2-HORIZ INLETS TYPE H (MOD.)
1. INSTALL 70 LF SCF AROUND INLET BOTTOM.
2. REMOVE 70 LF SCF PRIOR TO CONSTRUCTION OF INLET WALLS AND TOP.
3. INSTALL 70 LF SCF AROUND INLET OPENING UNTIL PROJECT COMPLETION.

NOTES:

1. DESIGNATED ROCK FILTER DAMS SHALL BE LEFT IN PLACE FOLLOWING THE COMPLETION OF CONSTRUCTION.

2. PAY LIMITS OF TOPSOIL AND GRASSING SHALL BE BETWEEN THE LINE SHOWN AND THE EAST R.O.W. OR EASEMENT LINE.

3. CONST. EROSION CONTROL BLANKET IN ALL V-DITCH SECTIONS 8' UP EACH SIDE, MEASURED ALONG SLOPE.

STATE OF TEXAS
DENNIS D. SATRE
71590
REGISTERED
PROFESSIONAL ENGINEER
12/28/06

"CONSTRUCTION RECORD DRAWINGS_8-01-2009

NO.	DATE	REVISION	APPROV.

DALLAS PARKWAY EXTENSION

COLLIN COUNTY

SW3P LAYOUT

3 OF 3

Halff Associates, Inc.
ENGINEERS · ARCHITECTS · SCIENTISTS · PLANNERS · SURVEYORS

DRAWN MDB DATE DEC 2006 | DESIGNED DDS DATE
CHECKED DDS DATE | SCALE

BOND PROJECT NO. 03-13 SHEET 267 OF 271

P-200612-01

DISCLAIMER:
The use of this standard is governed by the "Texas Engineering Practice Act". No warranty of any kind is made by TxDOT for any purpose whatsoever. TxDOT assumes no responsibility for the conversion of this standard to other formats or for incorrect results or damages resulting from its use.

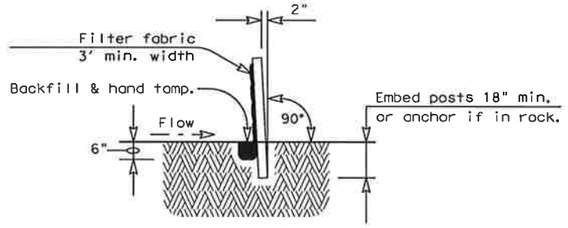

SECTION A-A

SEDIMENT CONTROL FENCE USAGE GUIDELINES

A sediment control fence may be constructed near the downstream perimeter of a disturbed area along a contour to intercept sediment from overland runoff. A 2 year storm frequency may be used to calculate the flow rate to be filtered.

Sediment control fence should be sized to filter a max. flow through rate of 100 GPM/FT^2. Sediment control fence is not recommended to control erosion from a drainage area larger than 2 acres.

PLAN SHEET LEGEND

Sediment Control Fence — SCF

GENERAL NOTES

1. The guidelines shown hereon are suggestions only and may be modified by the Engineer.

"CONSTRUCTION RECORD DRAWINGS_8-01-2009

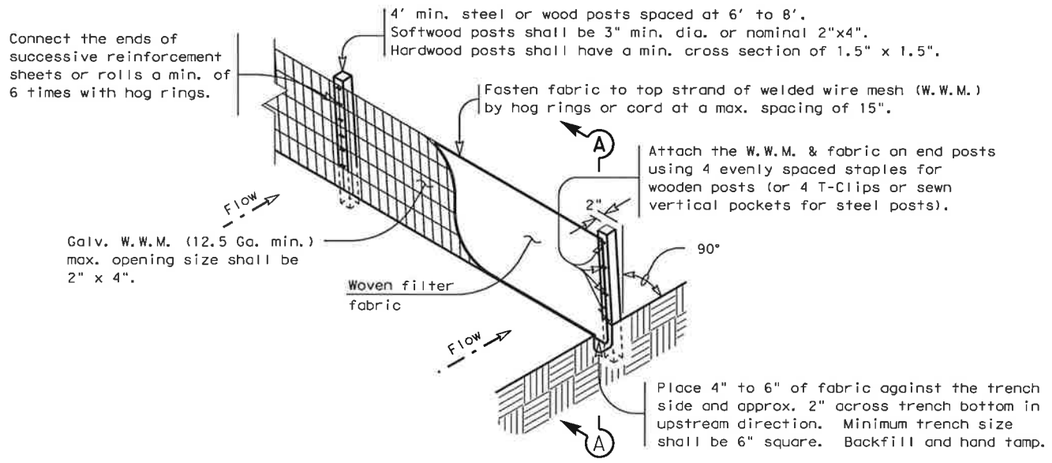

TEMPORARY SEDIMENT CONTROL FENCE

SCF

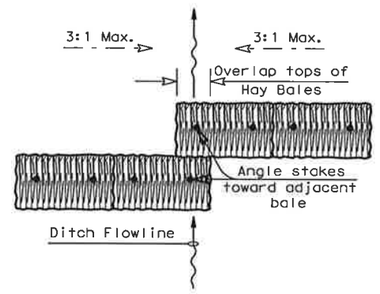

PLAN VIEW

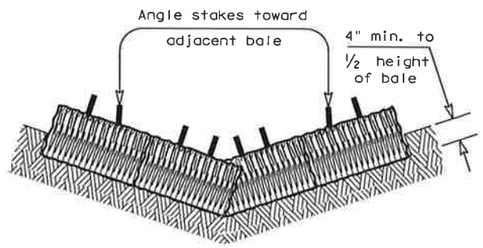

PROFILE VIEW

PLANS SHEET LEGEND

Baled Hay — BH

BALED HAY USAGE GUIDELINES

A Baled Hay installation may be constructed near the downstream perimeter of a disturbed area along a contour to intercept sediment from overland runoff. A two year storm frequency may be used to calculate the flow rate to be filtered. The installation should be sized to filter a maximum flow thru rate of 5 GPM/FT^2 of cross sectional area. Baled hay may be used at the following locations:

1. Where the runoff approaching the baled hay flows over disturbed soil for less than 100'. If the slope of the disturbed soil exceeds 10%, the length of slope upstream the baled hay should be less than 50'.
2. Where the installation will be required for less than 3 months.
3. Where the contributing drainage area is less than ½ acre.

For Baled Hay installations in small ditches, the additional following considerations apply:

1. The ditch sideslopes should be graded as flat as possible to maximize the drainage flowrate thru the hay.
2. The ditch should be graded large enough to contain the overtopping drainage when sediment has filled to the top of the baled hay.

Bales should be replaced usually every 2 months or more often during wet weather when loss of structural integrity is accelerated.

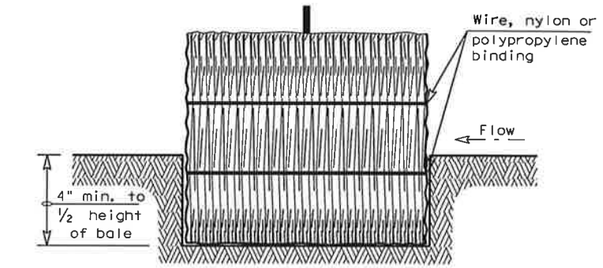

SECTION B-B

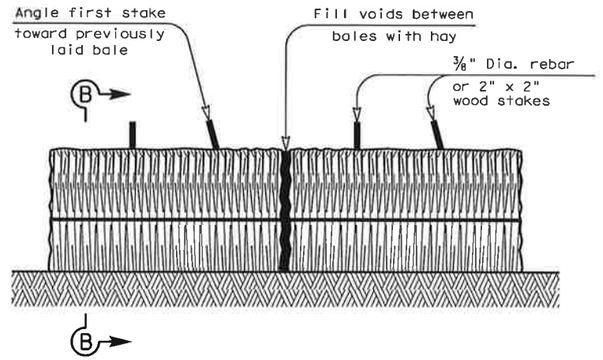

BALED HAY FOR EROSION CONTROL

BH

GENERAL NOTES

1. Hay bales shall be a minimum of 30" in length and weigh a minimum of 50 Lbs.
2. Hay bales shall be bound by either wire or nylon or polypropylene string. The bales shall be composed entirely of vegetative matter.
3. Hay bales shall be embedded in the soil a minimum of 4" and where possible ½ the height of the bale.
4. Hay bales shall be placed in a row with ends tightly abutting the adjacent bales. The bales shall be placed with bindings parallel to the ground.
5. Hay bales shall be securely anchored in place with ⅜" Dia. rebar or 2" x 2" wood stakes, driven through the bales. The first stake shall be angled towards the previously laid bale to force the bales together.
6. The guidelines shown hereon are suggestions only and may be modified by the Engineer.

Texas Department of Transportation
Design Division (Roadway)

TEMPORARY EROSION, SEDIMENT AND WATER POLLUTION CONTROL MEASURES

FENCED & BALED HAY

EC(1)-93

FILE: EC193.DGN	DN: HEJ	CK: HEJ	DW: BCD	CK:
©TxDOT JUNE 1993	DISTRICT	FEDERAL AID PROJECT		SHEET
REVISIONS				268
	COUNTY	CONTROL	SECT	JOB	HIGHWAY

P-200612-01

LEVELS DISPLAYED
1 3 4 5 6 7 8 9 10 11 12 17 30 45 51 6
17 18 19 20 21 22 23 24 25 26 27 28 29 33 51 52
33 34 35 36 37 38 39 40 42 43 44 45 46 47 48
49 50 51 52 53 54 55 56 57 58 59 60 61 62 63

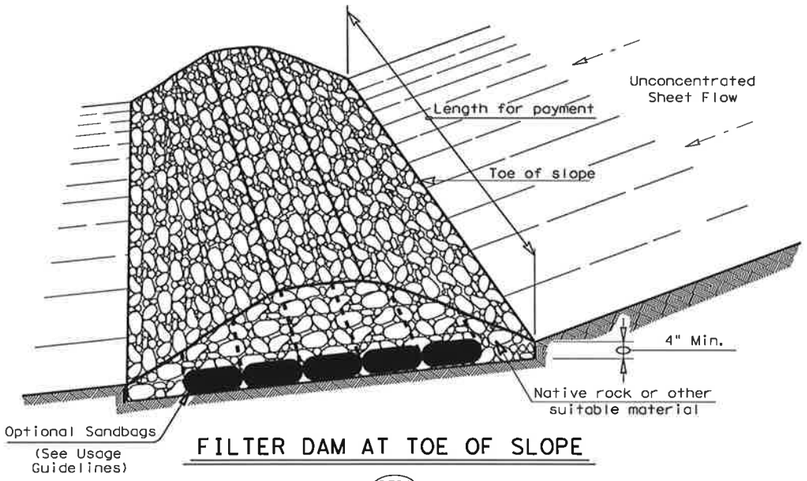

FILTER DAM AT TOE OF SLOPE

RFD1

TYPE 1

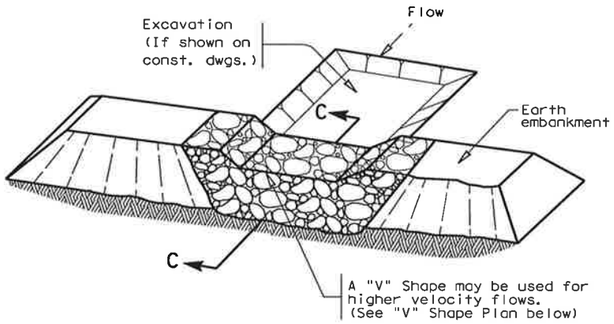

FILTER DAM AT SEDIMENT TRAP

RFD1 — OR — RFD2

TYPE 1 OR TYPE 2

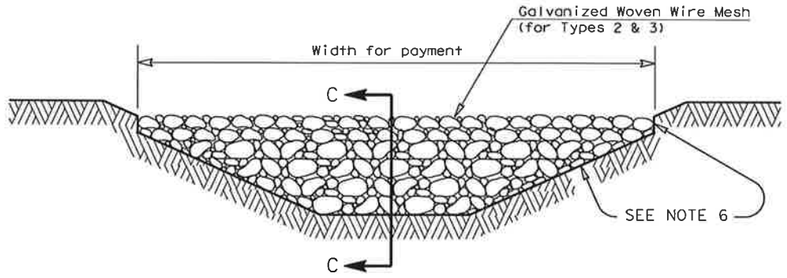

FILTER DAM AT CHANNEL SECTIONS

RFD1 — OR — RFD2 — OR — RFD3

TYPE 1 OR TYPE 2

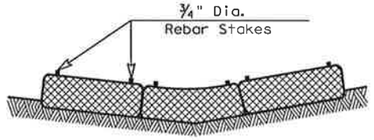

SECTION B-B

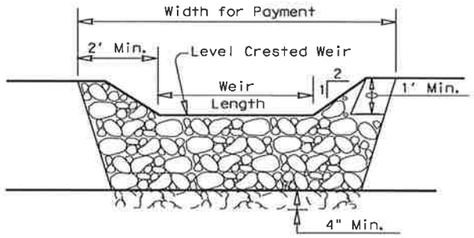

PROFILE

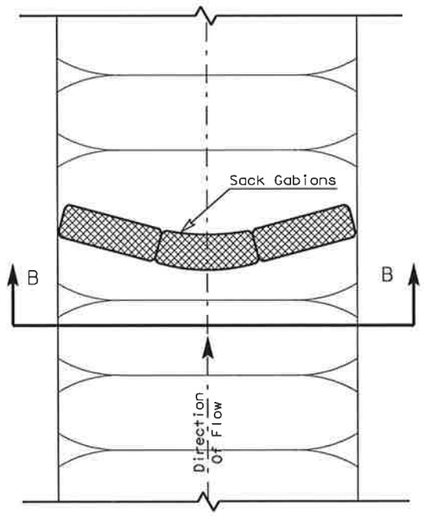

PLAN VIEW

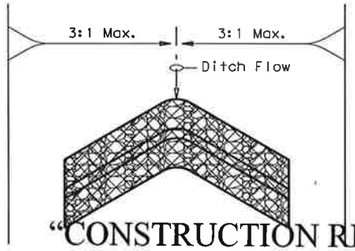

"V" SHAPE

(Plan View)

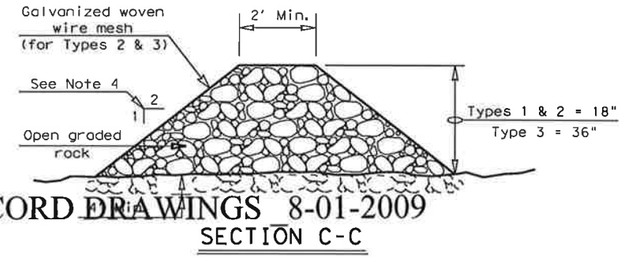

SECTION C-C

"CONSTRUCTION RECORD DRAWINGS 8-01-2009

PLANS SHEET LEGEND

Type 1 Rock Filter Dam — RFD1

Type 2 Rock Filter Dam — RFD2

Type 3 Rock Filter Dam — RFD3

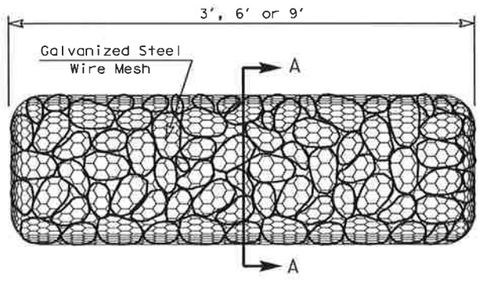

TYPE 4 (SACK GABIONS)

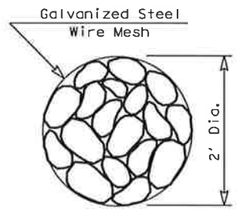

SECTION A-A

ROCK FILTER DAM USAGE GUIDELINES

Rock Filter Dams should be constructed downstream from disturbed areas to intercept sediment from overland runoff and/or concentrated flow. The dams should be sized to filter a maximum flow through rate of 60 GPM/FT^2 of cross sectional area. A 2 year storm frequency may be used to calculate the flow rate.

Type 1 (18" high with no wire mesh): Type 1 may be used at the toe of slopes, around inlets, in small ditches, and at dike or swale outlets. This type of dam is recommended to control erosion from a drainage area of 5 acres or less. Type 1 may not be used in concentrated high velocity flows (approx. 8 Ft/Sec or more) in which aggregate wash out may occur. Sandbags may be used at the embedded foundation (4" deep min.) for better filtering efficiency of low flows if called for on the plans or directed by the Engineer.

Type 2 (18" high with wire mesh): Type 2 may be used in ditches and at dike or swale outlets.

Type 3 (36" high with wire mesh): Type 3 may be used in stream flow and should be secured to the stream bed.

Type 4 (Sack gabions): Type 4 May be used in ditches and smaller channels to form an erosion control dam.

GENERAL NOTES

1. If shown on the plans or directed by the Engineer, filter dams should be placed near the toe of slopes where erosion is anticipated, upstream and/or downstream at drainage structures, and in roadway ditches and channels to collect sediment.
2. Materials (aggregate, wire mesh, sandbags, etc.) shall be as indicated by the specification for "Rock Filter Dams for Erosion and Sedimentation Control".
3. The rock filter dam dimensions shall be as indicated on the SW3P plans.
4. Side slopes should be 2:1 or flatter. Dams within the safety zone shall have sideslopes of 6:1 or flatter.
5. Maintain a minimum of 1' between top of rock filter dam weir and top of embankment for filter dams at sediment traps.
6. Filter dams should be embedded a minimum of 4" into existing ground.
7. The sediment trap for ponding of sediment laden runoff shall be of the dimensions shown on the plans.
8. Rock filter dam types 2 & 3 shall be secured with 20 gauge galvanized woven wire mesh with 1" diameter hexagonal openings. The aggregate shall be placed on the mesh to the height & slopes specified. The mesh shall be folded at the upstream side over the aggregate and tightly secured to itself on the downstream side using wire ties or hog rings. In stream use the mesh should be secured or staked to the stream bed prior to aggregate placement.
9. Sack Gabions should be staked down with ¾" dia. rebar stakes.
10. Flow outlet should be onto a stabilized area (vegetation, rock, etc.).
11. The guidelines shown hereon are suggestions only and may be modified by the Engineer.

DISCLAIMER:
The use of this standard is governed by the "Texas Engineering Practice Act". No warranty of any kind is made by TxDOT for any purpose whatsoever. TxDOT assumes no responsibility for the conversion of this standard to other formats or for incorrect results or damages resulting from its use.

LEVELS DISPLAYED
1 3 4 5 6 7 7 8 9 9 10 11 12 13 14 15 16
7 8 8 9 9 10 12 22 23 24 25 26 27 28 29 30 31 32
33 34 35 36 37 38 39 40 41 42 43 44 45 46 47 48
49 50 51 52 53 54 55 56 57 58 59 60 61 62 63

Texas Department of Transportation
Design Division (Roadway)

TEMPORARY EROSION, SEDIMENT AND WATER POLLUTION CONTROL MEASURES

ROCK FILTER DAMS

EC(2)-93

FILE: EC293.DGN	DN: HEJ	CK: HEJ	DW: BGD	CK:
©TxDOT JUNE 1993	DISTRICT	FEDERAL AID PROJECT		SHEET
REVISIONS				269
	COUNTY	CONTROL	SECT	JOB	HIGHWAY

P-200612-01

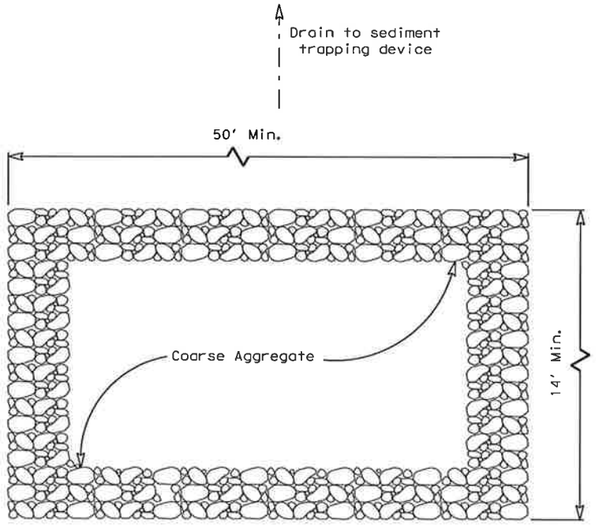

PLAN

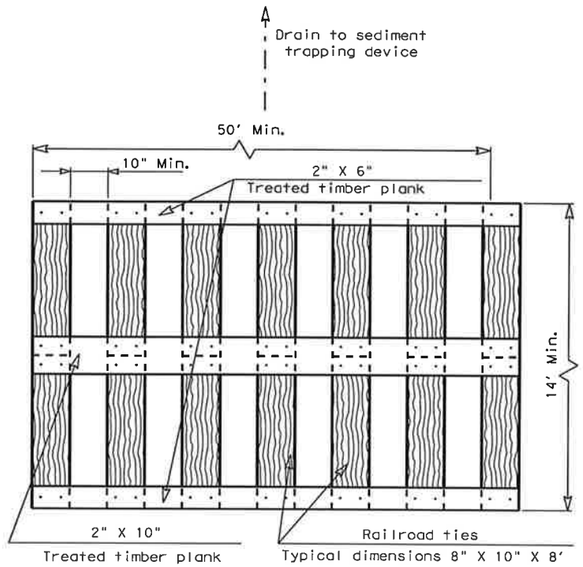

PLAN

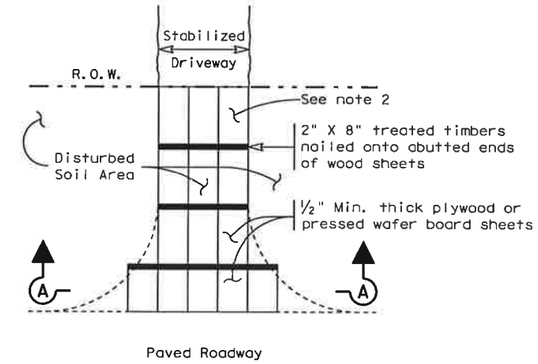

PLAN

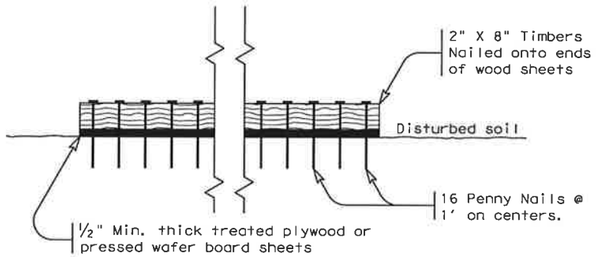

SECTION A-A

CONSTRUCTION EXIT (TYPE 3)

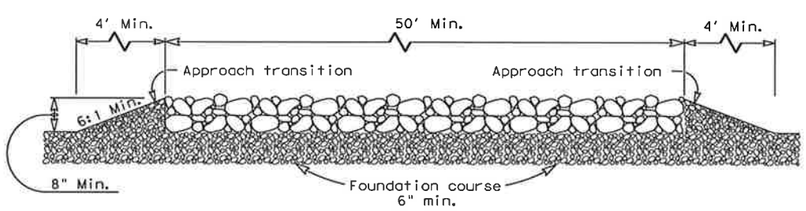

PROFILE

CONSTRUCTION EXIT (TYPE 1)

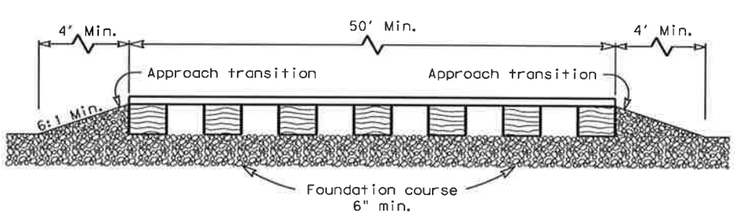

PROFILE

CONSTRUCTION EXIT (TYPE 2)

GENERAL NOTES

1. The length of the type 1 construction exit shall be as indicated on the plans, but not less than 50'.
2. The coarse aggregate should be open graded with a size of 4" to 8".
3. The approach transitions should be no steeper than 6:1 and constructed as directed by the Engineer.
4. The construction exit foundation course shall be flexible base, bituminous concrete, portland cement concrete or other material as approved by the Engineer.
5. The construction exit shall be graded to allow drainage to a sediment trapping device.
6. The guidelines shown hereon are suggestions only and may be modified by the Engineer.

GENERAL NOTES

1. The length of the type 2 construction exit shall be as indicated on the plans, but not less than 50'.
2. The treated timber planks shall be attached to the railroad ties with ½"x 6" min. lag bolts. Other fasteners may be used as approved by the Engineer.
3. The treated timber planks shall be #2 grade min., and should be free from large and loose knots.
4. The approach transitions shall be no steeper than 6:1 and constructed as directed by the Engineer.
5. The construction exit foundation course shall be flexible base, bituminous concrete, portland cement concrete or other material as approved by the Engineer.
6. The construction exit should be graded to allow drainage to a sediment trapping device.
7. The guidelines shown hereon are suggestions only and may be modified by the Engineer.

GENERAL NOTES

1. The length of the type 3 construction exit shall be as shown on the plans, or as directed by the Engineer.
2. The type 3 construction exit may be constructed from open graded crushed stone with a size of two to four inches spread a min. of 4" thick to the limits shown on the plans.
3. The treated timber planks shall be #2 grade min., and should be free from large and loose knots.
4. The guidelines shown hereon are suggestions only and may be modified by the Engineer.

DISCLAIMER:
The use of this standard is governed by the "Texas Engineering Practice Act". The warranty of any kind is made by TxDOT for any purpose whatsoever. TxDOT assumes no responsibility for the conversion of this standard to other formats or for incorrect results or damages resulting from its use.

LEVELS DISPLAYED

Texas Department of Transportation
Design Division (Roadway)

TEMPORARY EROSION, SEDIMENT AND WATER POLLUTION CONTROL MEASURES

CONSTRUCTION EXITS

EC(3)-93

FILE: EC393.DGN	DN: HEJ	CK: HEJ	DW: BGD	CK:
© TxDOT JUNE 1993	DISTRICT	FEDERAL AID PROJECT		SHEET 270
REVISIONS	COUNTY	CONTROL	SECT	JOB	HIGHWAY

"CONSTRUCTION RECORD DRAWINGS_8-01-2009

P-200612-01

DISCLAIMER:
The use of this standard is governed by the "Texas Engineering Practice Act". No warranty of any kind is made by TxDOT for any purpose whatsoever. TxDOT assumes no responsibility for the conversion of this standard to other formats or for incorrect results or damages resulting from its use.

LEVELS DISPLAYED

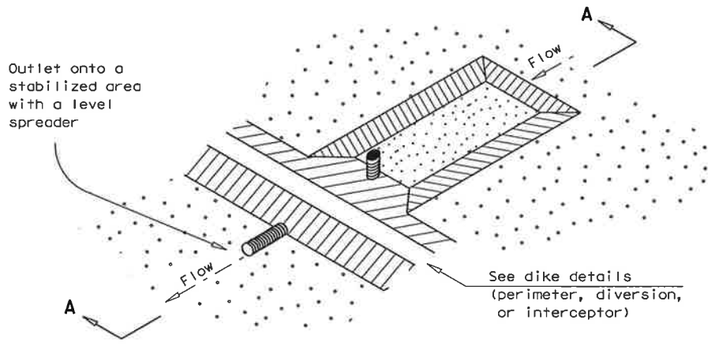

SEDIMENT BASIN AND/OR TRAP WITH PIPE OUTLET

ST/PO

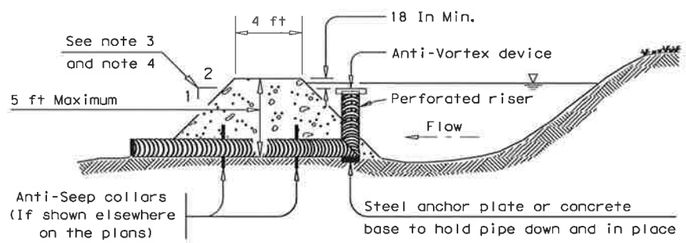

SECTION A-A

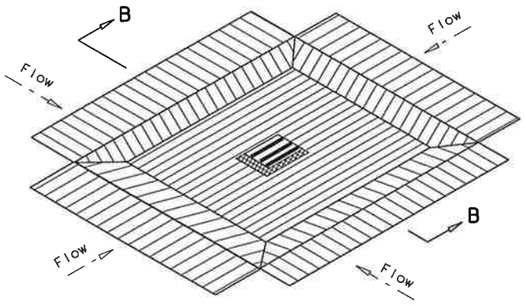

DROP INLET SEDIMENT TRAP

ST-DI

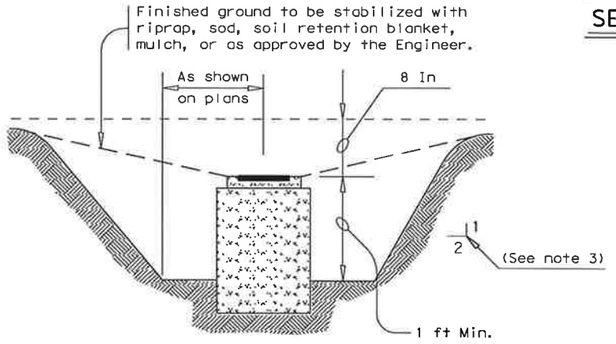

SECTION B-B

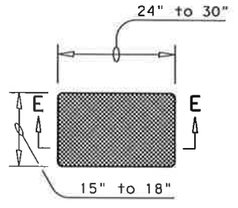

SANDBAG DETAIL

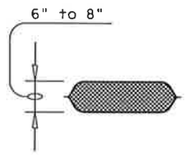

SECTION E-E

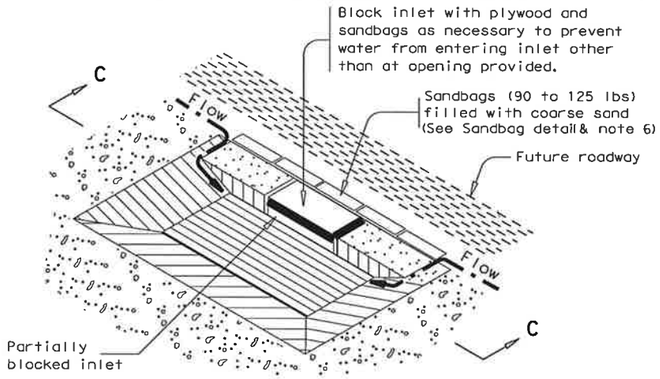

CURB INLET SEDIMENT TRAP

ST-CI

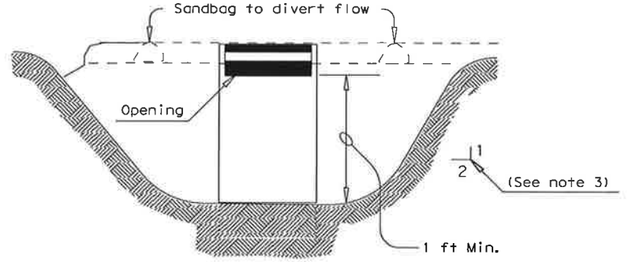

SECTION C-C

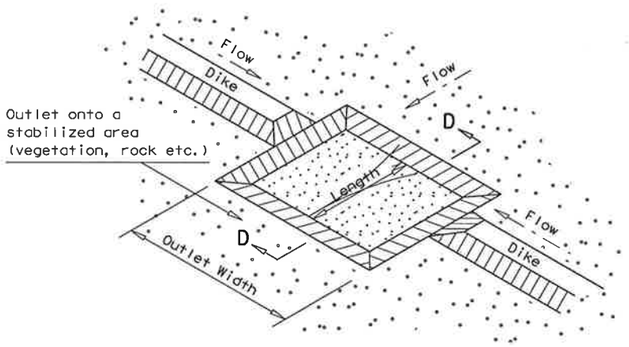

SEDIMENT TRAP WITH LEVEL STABILIZED OUTLET

ST

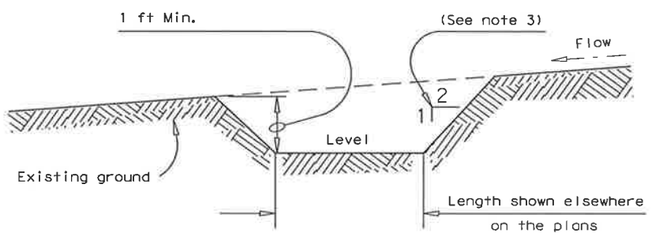

SECTION D-D

PLANS SHEET LEGEND

ST/PO
Sediment Basin and/or Trap with Pipe Outlet

ST-DI
Drop Inlet Sediment Trap

ST-CI
Curb Inlet Sediment Trap

ST
Sediment Trap with Level Stabilized Outlet

"CONSTRUCTION RECORD DRAWINGS_8-01-2009

SEDIMENT BASIN & TRAP USAGE GUIDELINES

A sediment basin and/or trap may be used to precipitate sediment out of runoff draining from an unstabilized area.

Basins: The drainage area for a sediment basin should not exceed 100 acres. The basin capacity shall be at least 1800 CF/Acre of drainage area (0.5" over the drainage area). If the disturbed area draining to the basin is larger than 10 acres, the basin capacity should be 3600 CF/Acre (1.0" over the drainage area).

The basin should have a 40 hour draw-down time with an emergency spillway. The spillway may be designed to pass the peak rate of runoff from a 25 year frequency storm. The 100 year storm should be investigated to consider possible flooding impacts.

The entrance into the basin should be protected from erosion. The basin should be cleaned when the capacity has been reduced by 1/3.

Traps: The drainage area for a sediment trap should not exceed 5 acres. The trap capacity should be 1800 CF/Acre (0.5" over the drainage area).

Sediment traps should be placed in the following locations:
1. Within drainage ditches spaced @ 500'± on center
2. Immediately preceding ditch inlets
3. Just before the drainage enters a water course
4. Just before the drainage leaves the right of way

The trap outlet may either be through a perforated riser and pipe assembly designed to achieve a 40 hour draw-down time or over a level stabilized area (vegetation, rock, etc.).

The trap should be cleaned when the capacity has been reduced by ½ or the sediment has accumulated to a depth of 1', whichever is less.

GENERAL NOTES

1. Pipe outlet material shall conform to the Item "Pipe Underdrains" or as accepted by the Engineer.
2. All pipe connections shall be watertight.
3. Side slopes within the safety clear zone of a roadway shall be 6:1 or flatter. Protect the traveling public from inlet stacks within the clear zone.
4. Sediment basins shall have side slopes of 3:1 or flatter.
5. The dimensions and limits of excavation for sediment basins and traps will be as shown elsewhere on the plans.
6. The sandbag material shall be made of polypropylene, polyethylene or polyamide woven fabric, min. unit weight 4 ounces/SY, Mullen burst strength exceeding 300 psi and ultraviolet stability exceeding 70%.
7. The guidelines shown hereon are suggestions only and may be modified by the Engineer.

Texas Department of Transportation
Design Division (Roadway)

TEMPORARY EROSION, SEDIMENT AND WATER POLLUTION CONTROL MEASURES

SEDIMENT BASINS AND TRAPS (EARTHWORK FOR EROSION CONTROL)

EC(6)-93

FILE: EC693.DGN	DN: HEJ	CK: HEJ	DW: BGD	CK:
©TxDOT MAY 1993	DISTRICT	FEDERAL AID PROJECT		SHEET
REVISIONS				271
	COUNTY	CONTROL	SECT	JOB	HIGHWAY

P-200612-01