ENGINEERING PLANS

THE CARTER RANCH - PHASE VA

CITY OF CELINA, COLLIN COUNTY, TEXAS

DEVELOPER:

19 FM LTD.

1221 NORTH INTERSTATE 35, SUITE 200
CARROLLTON, TEXAS 75006
PHONE (469) 892-7200 FAX (469) 892-7201

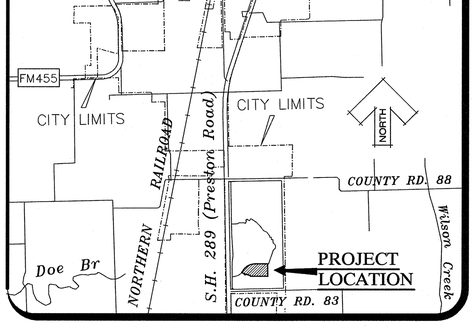

VICINITY MAP
(Not To Scale)

SHEET LIST

SHEET NO.	DESCRIPTION
1	COVER SHEET
2	GENERAL NOTES
3	FINAL PLAT
4	FINAL PLAT
5	WATER PLAN
6	SANITARY SEWER PLAN
7	SANITARY SEWER PROFILES : LINE S-1
8	SANITARY SEWER PROFILES : LINES S-2 S-3 & S-4
9	DRAINAGE AREA MAP
10	STORM SEWER CALCULATIONS
11	STORM SEWER PLAN & PROFILE : LINE D-1 & LATERAL D-1.1
12	STORM SEWER PLAN & PROFILES : LATERALS D-1.2 D-1.3 D-1.4 D-2.2 & D-2.3
13	STORM SEWER PLAN & PROFILE : LINE D-2 & LATERAL D-2.1
14	PAVING PLAN & PROFILE : ANDALUSION TRAIL STA. 0+00.00 - 10+50.00
15	PAVING PLAN & PROFILE : ANDALUSION TRAIL STA. 10+50.00 - END SADDLEBRED TRAIL
16	PAVING PLAN & PROFILE : PADDOCK LANE
17	GRADING PLAN
18	GRADING PLAN
19	EROSION CONTROL PLAN
20	EROSION CONTROL DETAILS
21	WATER DETAILS
22	WATER DETAILS
23	SANITARY SEWER DETAILS
24	SANITARY SEWER DETAILS
25	STORM SEWER DETAILS
26	STORM SEWER DETAILS
27	PAVING DETAILS
28	WALL DETAILS

USA PROFESSIONAL SERVICES GROUP, INC.

CIVIL ENGINEERS–SURVEYORS–PLANNERS–LANDSCAPE ARCHITECTS
TEXAS BOARD OF PROFESSIONAL ENGINEERS REGISTERED NO. F–1845
1525 VICEROY DRIVE, DALLAS, TEXAS 75235
OFFICE: (214) 634–3300 FAX: (214) 634–3338
WWW.USAENGINEERS.COM

FEBRUARY 2013

RECORD DRAWING

ALL INFORMATION SHOWN ON THESE PLANS WAS FURNISHED BY THE CONTRACTOR. ALL RESPONSIBILITY FOR THE ACCURACY BELONGS TO THE CONTRACTOR.

Duc Tran
USA PROFESSIONAL SERVICES GROUP, INC.

DATE: August 15, 2013

STATE OF TEXAS
JAMES SCOTT YOUNG
69031
REGISTERED PROFESSIONAL ENGINEER
1/15/13

USA JOB NO. 2009016.02

2009016.02 - THE CARTER RANCH - PHASE VA - ENGINEERING PLANS

P:\Siteworg\2009016.02\Dwg\2009016_02-cv.dwg, Layout1, 8/21/2013 4:46:43 PM, Duc Tran

City of Celina Notes

GENERAL

1. All construction shall be in accordance with the latest revision of the North Central Texas Council of Governments "Standard Specifications for Public Works Construction" including the Standard Drawings@ therein and the City of Celina's addendum thereto. Contractor shall have at least one set of approved Engineering Plans and Specifications on-site at all times.

2. Before beginning construction, the contractor shall prepare a construction sequence schedule. The construction schedule shall be such that there is the minimum interference with traffic along or adjacent to the project.

3. Construction may not be begun earlier than 7:00 A.M. on weekdays nor continued after dark without permission from the City of Celina. Construction on holidays and Saturday must be approved two days in advance, a fee of $300.00 a day for working on holidays and Saturday will be accessed payable to the city before work is preformed. Work may not be begin before 8:00 A.M. and work on Sunday Is prohibited without special permission and payment of fees.

4. Utilities shown on the plans were taken from field surveys and information provided by the utility companies. The completeness and the accuracy of this data is not guaranteed.

The contractor is responsible for verifying the location of all underground utilities and structures and protecting them from damage during construction.

It will be the responsibility of each contractor to protect all existing public and private utilities throughout the construction of this project. Contractor shall contact the appropriate utility companies for line location prior to commencement of construction and shall assume full liability to those companies for any damages caused to their facilities.

DIGTESS	800-DIG-TESS
GCEC-TELEGRAM	903-482-7274
GCEC-ELECTRIC	903-821-3007
AT&T	972-569-3013
ATMOS ENERGY	972-881-4161
ATMOS ENERGY	214-341-9900
CROSSTEX ENERGY	817-570-6753
ONEOK	903-257-6594
COSERVE-ELEC	940-321-7800
COSERVE-GAS	940-321-7800
CITY OF CELINA	972-658-2052
CITY OF PROSPER	972-347-9969
MARILEE SUD	972-382-3222
GRANDE	972-410-0583
SUDDEN LINK	469-853-0486

5. Work may not be backfilled or covered until the City has inspected it.

6. Material testing shall be performed by an independent testing laboratory and paid for by the Contractor. The following material tests shall be provided by the Contractor:

a. Embankment - One soil density test shall be performed at each location for each 500 C.Y. of backfill placed.

b. Pavement Sub grade - One gradation test (where lime stabilized) and one soil density test shall be performed for each 100 linear feet of pavement unless otherwise noted.

b. Utility Trench Backfill - One soil density test shall be performed as directed by City of Celina..

c. Concrete Tests:

(1). Compressive Strength - as specified in the N.C.T.C.O.G. specifications or city specifications.
(2). Air Content - One test for each 25 C.Y. of concrete or fraction thereof unless otherwise noted.
(3). Slump - One test for each 9 C.Y. unless otherwise noted.

The City shall select the location and depth of each soil density test. unless otherwise directed.

7. All excavation on the project is unclassified.

8. Temporary erosion control shall be used to minimize the spread of silt and mud from the project on to existing streets, alleys, drainage ways and public and private property. Temporary erosion controls may include silt fences, rock check dams, stabilized construction entrances, straw bales, berms, dikes, swales, strips of undisturbed vegetation, check dams and other methods as required by the City Administrator or his representative and shall conform to the Storm Water Quality Best Management Practices for Construction Activities as published by the North Central Texas Council of Governments.

9. Finished slopes on public rights-of-way and easements shall not be steeper than 4:1. All slopes steeper than 6:1 shall be covered with erosion control matting and are hydro mulched and maintained by the contractor until grass covers all parts of the slope.

10. The contractor shall maintain two-way traffic at all times along the project.

11. Remove, salvage and replace all street and traffic control signs, which may be damaged by the construction of the project.

12. All trenching and excavation shall be performed in accordance with OSHA standards. Trench safety design will be the responsibility of the Contractor. Contractor shall submit a trench safety design approved by a professional engineer to the City for review prior to the start of any underground utility construction.

PAVING

1. All embankments shall be compacted to 95% Standard Proctor density.

2. All streets and alleys shall be placed on lime stabilized sub grade with a lime content of not less than 7%. Or approved by city engineer.

3. The minimum 28 day compressive strength of concrete street paving shall not be less than 3600 psi and shall be air entrained. Water may not be applied to the surface of concrete paving to improve workability.

4. All curb and gutter shall be integral with the pavement.

5. Parabolic crowns are required on all street pavements except on major thoroughfares where straight sections are required.

6. Streets and alleys shall be constructed with provisions for sidewalk ramps at all Intersections.

DRAINAGE

1. Storm sewer pipe shall be reinforced concrete, Class III unless otherwise noted.

2. All structural concrete shall be Class "C" (3600 psi compressive strength at 28 days), air entrained.

3. The contractor shall install plugs in storm sewer lines or otherwise prevent mud from entering the storm sewer system during construction.

WATER AND SANITARY SEWER

1. Water mains shall be AWWA C-900 or 905 PVC Class 200 unless otherwise noted. Minimum cover for waterlines is 48" below top of curb, 60" where no curbed street is present or as required to clear existing utilities, whichever is greater. Class B+ embedment unless otherwise noted.

2. Marking tape shall be installed one foot above and over PVC water lines.

3. Fittings for PVC water lines shall be ductile iron and be encased in a polyethylene sheath.

4. All Mechanical Joints will be restrained. (Mega-Lug etc.)

5. Valves, including tapping valves shall be resilient seat gate valves.

6. All direct burial valves shall be provided with cast iron valve boxes with PVC stacks. Valve stacks shall be vertical and concentric with the valve stem. Stainless steel valve extensions are required on all valves where the operating nut is greater than 4 feet below finished grade.

7. Fire hydrants shall be Waterous or Equal as directed or approved by the City of Celina on a case by case basis and field painted silver with bonnet and caps color-coded to pipe size.

a. Six inch line- silver body with RED bonnet and caps.
b. Eight inch line- silver body with BLUE bonnet and caps.
c. Ten inch line- silver body with GREEN bonnet and caps.
d. Twelve inch and larger- silver body with YELLOW bonnet and caps.

8. All exposed bolting on any buried equipment or material shall be stainless steel. Included are:

a. Bonnet and stuffing box bolts on valves.
b. Shoe bolts on fire hydrants.
c. Flange bolts.
d. "Cor-ten" mechanical joint "T" bolts are acceptable for direct burial service.

9. Meter boxes shall approved by the City of Celina. Please see attached.

10. Sanitary sewer mains shall be DR 35 PVC. Class H embedment unless otherwise noted.

a. The contractor shall install and maintain watertight plugs in all connections to the City's sanitary sewer system until the City accepts the project.

b. All sanitary sewer lines and manholes shall be leak tested before the project is accepted. Deflection testing of PVC sewer lines is required.

RECORD DRAWING

ALL INFORMATION SHOWN ON THESE PLANS WAS FURNISHED BY THE CONTRACTOR. ALL RESPONSIBILITY FOR THE ACCURACY BELONGS TO THE CONTRACTOR.

Duc Tran
USA PROFESSIONAL SERVICES GROUP, INC.

DATE: August 15, 2013

REV	DESCRIPTION	DATE

THE CARTER RANCH - PHASE VA

CITY OF CELINA, COLLIN COUNTY, TEXAS

GENERAL NOTES

19 FM LTD.
1221 North Interstate 35, Suite 200
Carrollton, Texas 75006
Phone (469) 892-7200 Fax (469) 892-7201

STATE OF TEXAS
JAMES SCOTT YOUNG
69031
REGISTERED PROFESSIONAL ENGINEER
1/15/19

USA PROFESSIONAL SERVICES GROUP, INC.
TEXAS BOARD OF PROFESSIONAL ENGINEERS
REGISTERED ENGINEERING FIRM F-1845
CIVIL ENGINEERS • SURVEYORS
PLANNERS • LANDSCAPE ARCHITECTS
1525 VICEROY DRIVE
DALLAS, TEXAS 75235
(214) 634-3300 FAX (214) 634-3338

DATE: January 2013
SCALE: N/A
SHEET: 2 OF 28
PROJECT NO. 2009016.02

P:\Sdskengn\2009016.02\Dwg\ 2009016_02-gn.dwg, 1/15/2019 9:37:37 AM, James Gardella

GRAPHIC SCALE

100 0 50 100 200 400

(IN FEET)
1 inch = 100 ft.

Block E	
Lot	Area
1	7544 s.f.
1X	6423 s.f.
2	7000 s.f.
3	7000 s.f.
4	7000 s.f.
5	7000 s.f.
6	7000 s.f.
7	7000 s.f.
8	7000 s.f.
9	7000 s.f.
10	7000 s.f.
11	7000 s.f.
12	7000 s.f.

Block H	
Lot	Area
1	13643 s.f.
2	7338 s.f.
3	7338 s.f.
4	7338 s.f.
5	7338 s.f.
6	7149 s.f.
7	6552 s.f.
8	6552 s.f.
9	6552 s.f.
10	6552 s.f.
11	6552 s.f.
12	6552 s.f.
13	6552 s.f.
14	6552 s.f.
15	6552 s.f.
16	6552 s.f.
17	6552 s.f.

Block H	
Lot	Area
20	6552 s.f.
21	6552 s.f.
22	6552 s.f.
23	6552 s.f.
24	6552 s.f.
25	6552 s.f.
26	6552 s.f.
27	6552 s.f.
28	6552 s.f.
29	6552 s.f.
30	6552 s.f.
31	7689 s.f.
32	8052 s.f.
33	8052 s.f.
34	9146 s.f.

Block I	
Lot	Area
26	6496 s.f.
27	6496 s.f.
28	6496 s.f.
29	6496 s.f.
30	6496 s.f.
31	6496 s.f.
32	6496 s.f.
33	6496 s.f.
34	6496 s.f.
35	6496 s.f.
36	6496 s.f.

Block I	
Lot	Area
37	6818 s.f.
38	6920 s.f.
39	6920 s.f.
40	6920 s.f.
41	6920 s.f.
42	6920 s.f.
43	6920 s.f.
44	6920 s.f.
45	6994 s.f.
46	13220 s.f.

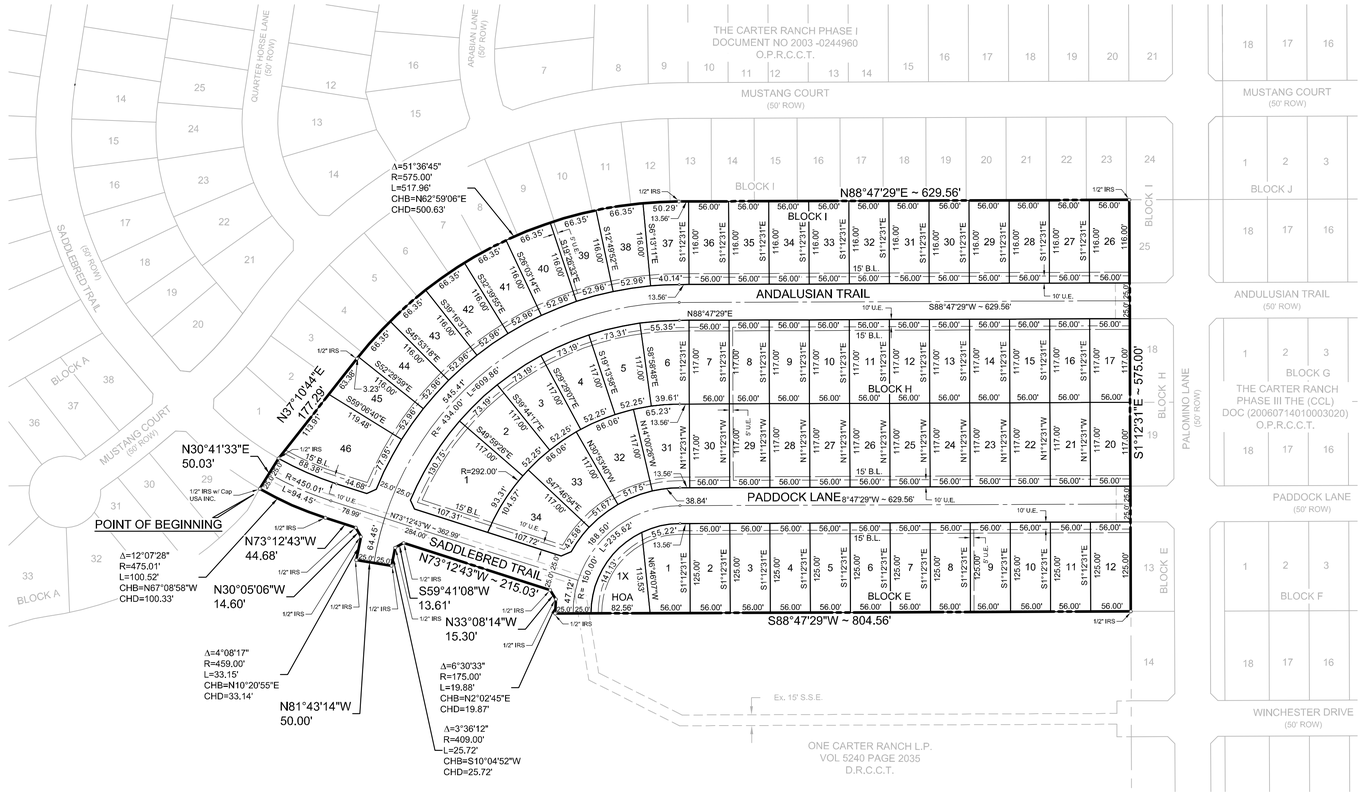

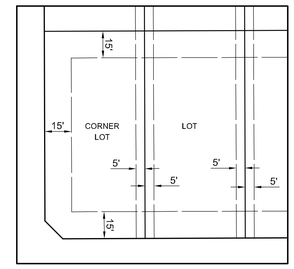

TYPICAL SETBACK LINES
NOT TO SCALE

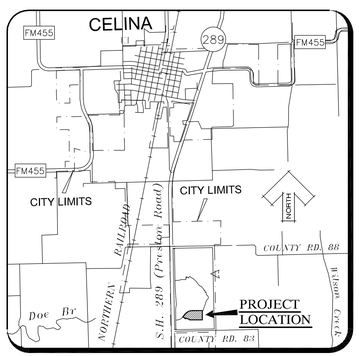

VICINITY MAP
(Not To Scale)

PLAT NOTES

1. All open space / common area lots are to be dedicated to the HOA and the HOA will be responsible for the maintenance and upkeep of said lots.

2. Sidewalks must be installed by the Developer along all open space and common area lots

3. The City of Celina will not exclude other utilities from dedicated water & sewer easements but reserves the right to assign the locations of other utilities in available portions of said easements. Franchise utilities shall be placed just inside the outside edge of the right-of-way (outside of sidewalk).

4. A fence may be constructed along lot lines within a surface drainage easement provided the fence does not obstruct surface drainage.

5. All lot corners and boundary corners will be set upon completion of construction with 1/2" x 18" iron rods with yellow plastic caps stamped "USA INC." The centerline of the street right-of-way will be monumented with a scribed "x" in concrete at the p.c.'s, p.t.'s and intersection points.

6. All water, sanitary sewer and drainage easements to be dedicated to the City of Celina and maintained by the HOA.

7. Except as shown, no portion of the property is located in the 100 year floodplain as shown on The Flood Insurance Rate Map for Collin County, Texas. Map No. 48085C0120J, revised June 2, 2009.

LEGEND	
SYMBOL	DESCRIPTION
S.F.	Lot Area (Square Feet)
B.L.	Minimum Building Setback Line
IRS	Iron Rod Set
IRF	Iron Rod Found
B.L.	Minimum Building Setback Line
D.R.C.C.T.	Deed Records, Collin County, Texas
O.P.R.C.C.T.	Official Public Records, Collin County, Texas

AREA TABLE	
Street Right-of-Way	124,380.28 S.F. / 2.86 Acres
Lots	458,848.20 S.F. / 10.53 Acres
Open Space/Common Areas	6,422.58 S.F. / 0.15 Acres
Gross Area	589,800.00 S.F. / 13.5399 Acres

RECORD DRAWING

ALL INFORMATION SHOWN ON THESE PLANS WAS FURNISHED BY THE CONTRACTOR. ALL RESPONSIBILITY FOR THE ACCURACY BELONGS TO THE CONTRACTOR.

Duc Tran
USA PROFESSIONAL SERVICES GROUP, INC.

DATE: August 15, 2013

Developer/Owner:
D.R. HORTON - TEXAS, LTD.
4306 MILLER ROAD
ROWLETT, TEXAS 75088
Phone (214) 607 - 4244

FINAL PLAT

THE CARTER RANCH - PHASE VA
65 RESIDENTIAL LOTS
1 OPEN SPACE/COMMON AREA LOTS
13.5399 ACRES
SITUATED IN THE
JOHN CAHILL SURVEY ABSTRACT No. 171
CITY OF CELINA, COLLIN COUNTY, TEXAS

USA PROFESSIONAL SERVICES GROUP, INC.
TEXAS BOARD OF PROFESSIONAL ENGINEERS REGISTERED ENGINEERING FIRM F-1845
CIVIL ENGINEERS - SURVEYORS - PLANNERS LANDSCAPE ARCHITECTS
1525 VICEROY DRIVE
DALLAS, TEXAS 75235
(214) 634-3300 FAX (214) 634-3338

May 2013 2009016.02

SHEET 1 OF 2

CITY CASE NO. _____

Recording Information: Cabinet_____ Page_____

P:\Sidebars\2009016.02\dwg\Plats 2009016_02-FP Ph 5A.dwg, 8/21/2013 2:58:56 PM, Duc Tran

STATE OF TEXAS
COUNTY OF COLLIN

OWNER'S DEDICATION

WHEREAS D.R. HORTON - TEXAS, LTD. , is the owner of a **13.5399** acre tract of land situated in the John Cahill Survey, Abstract No. 171, City of Celina, Collin County, Texas and being all of that tract of land described in a Special Warranty Deed from **19 FM LTD.** to **D.R.HORTON – TEXAS, LTD.,** as recorded in Document No. 20130402000442300 of the Official Public Records, Collin County, Texas and being more particularly described as follows:

BEGINNING at a 1/2 inch iron rod with cap stamped "USA INC" set for corner (hereinafter called 1/2 inch iron rod set for corner), said rod being the most Easterly corner of lot 29, Block A, of Carter Ranch Phase 1 as recorded in Document No. 2003-0244960 of the Official Public Records, Collin County, Texas (O.P.R.C.C.T.) and being on the most Southwesterly Right of Way of Saddlebred Trail (a 50 foot Right-of-Way).

THENCE North 30 degrees 41 minutes 33 seconds East along most Southerly line of said Carter Ranch Phase 1, a distance of 50.03 feet to a 1/2 inch iron rod set for corner. Said rod being the most Southerly corner of lot 1 Block I of Carter Ranch Phase 1 and being on the most Northeasterly Right of Way of Saddlebred Trail (a 50 foot Right-of-Way).

THENCE North 37 degrees 10 minutes 44 seconds East, along the most Southeasterly Line Cater Ranch Phase 1, a distance of 177.29 feet to a 1/2 inch iron rod set for corner and the beginning of a curve to the right having a radius of 575.00 feet, a central angle of 51 degrees 36 minutes 45 seconds a chord which bears North 62 degrees 59 minutes 06 seconds East and a chord distance of 500.63 feet.

THENCE along said curve and along the most Southeasterly Line Carter Ranch Phase 1 an arc distance of 517.96 feet to a 1/2 inch iron rod set for corner.

THENCE North 88 degrees 47 minutes 29 seconds East along the most Southerly Line Carter Ranch Phase 1 a distance of 629.56 feet to a 1/2 inch iron rod set for corner said rod being the Northwest corner of lot 25 Block I of Carter Ranch Phase III as recorded in Document No. 20060714010003020 of the Official Public Records, Collin County, Texas (O.P.R.C.C.T.).

THENCE South 01 degree 12 minutes 31 seconds East departing the most Southerly Line of Carter Ranch Phase 1 and continuing along the most Westerly Line of Carter Ranch Phase III a total distance of 575.00 feet to a 1/2 inch iron rod set for corner, said rod being the Southwest corner of lot 13 Block E and Northwest corner of lot 14 Block E of Carter Ranch Phase III.

THENCE South 88 degrees 47 minutes 29 seconds West departing the Southwest corner of lot 13 and Northwest corner of lot 14 Block E and across the One Carter Ranch L.P. Tract as recorded in Volume 5240 Page 2035 of The Deed Records Collin County, Texas (D.R.C.C.T.) as follows: a distance of 804.56 feet to a 1/2 inch iron rod set for corner and the beginning of a non- tangent curve to the right having a radius of 175.00 feet, a central angle of 06 degrees 30 minutes 33 seconds a chord which bears North 02 degrees 02 minutes 45 seconds East and a chord distance of 19.87 feet.

THENCE along said curve an arc distance of 19.88 feet to a 1/2 inch iron rod set for corner.

THENCE North 33 degrees 08 minutes 14 seconds West, a distance of 15.30 feet to a 1/2 inch iron rod set for corner.

THENCE North 73 degrees 12 minutes 43 seconds West, a distance of 215.03 feet to a 1/2 inch iron rod set for corner.

THENCE South 59 degrees 41 minutes 08 seconds West, a distance of 13.61 feet to a 1/2 inch iron rod set for corner and the beginning of a non- tangent curve to the left having a radius of 409.00 feet, a central angle of 03 degrees 36 minutes 12 seconds, a chord which bears South 10 degrees 04 minutes 52 seconds West and a chord distance of 25.72 feet.

THENCE along said curve an arc distance of 25.72 feet to a 1/2 inch iron rod set for corner.

THENCE North 81 degrees 43 minutes 14 seconds West for a distance of 50.00 feet to a 1/2 inch iron rod set for corner and the beginning of a non- tangent curve to the right having a radius of 459.00 feet, a central angle of 04 degrees 08 minutes 17 seconds, a chord which bears North 10 degrees 20 minutes 55 seconds East and a chord distance of 33.14 feet.

THENCE along said curve an arc distance of 33.15 feet to a 1/2 inch iron rod set for corner.

THENCE North 30 degrees 05 minutes 06 seconds West, a distance of 14.60 feet to a 1/2 inch iron rod set for corner.

THENCE North 73 degrees 12 minutes 43 seconds West for a distance of 44.68 feet to a 1/2 inch iron rod set for corner and the beginning of a curve to the right having a radius of 475.01 feet, a central angle of 12 degrees 07 minutes 28 seconds, a chord which bears North 67 degrees 08 minutes 58 seconds West and a chord distance of 100.33 feet.

THENCE along said curve an arc length of 100.52 feet to the **POINT OF BEGINNING** and containing **13.5399 acres** or **589,800 square feet** of land, more or less.

NOW, THEREFORE, KNOW ALL MEN BY THESE PRESENTS:

That **D.R. HORTON - TEXAS, LTD.** , acting herein by and through its duly authorized officer(s), does hereby adopt this plat designating the herein above described property as **THE CARTER RANCH PHASE VA** , an addition to the City of Celina, Texas, and does hereby dedicate, in fee simple to the public use forever, the streets, rights-of-way, and other public improvements shown thereon. The streets and alleys, if any, are dedicated for street purposes. The easements and public use areas, as shown, are dedicated, for the public use forever, for the purposes indicated on this plat. No buildings, fences, trees, shrubs or other improvements or growths shall be constructed or placed upon, over or across the easements as shown, except that landscape improvements may be placed on landscape easements, if approved by the City Council of the City of Celina. In addition, utility easements may also be used for the mutual use and accommodation of all public utilities desiring to use or using the same unless the easement limits the use to particular utilities, said use by public utilities being subordinate to the public's and City of Celina's use thereof. The City of Celina and public utility entities shall have the right to remove and keep removed all or parts of any buildings, fences, trees, shrubs or other improvements or growths which may in any way endanger or interfere with the construction, maintenance, or efficiency of their respective systems in said easements. The City of Celina and public utility entities shall at all times have the full right ingress and egress to or from their respective easements for the purpose of constructing, reconstructing, inspecting, patrolling, maintaining, reading meters, and adding to or removing all or parts of their respective systems without the necessity at any time procuring permission from anyone.

This plat approved subject to all platting ordinances, rules, regulations and resolutions of the City of Celina, Texas

WITNESS, my hand, this the _____ day of _____, 2013.

By:

_____
Authorized Signature of Owner

_____
Printed Name and Title

STATE OF TEXAS
COUNTY OF _____

Before me, the undersigned authority, a Notary Public in and for the State of Texas, on this day personally appeared _____, Owner, known to me to be the person whose name is subscribed to the foregoing instrument and acknowledged to me that he executed the same for the purpose and considerations therein expressed.

Given under my hand and seal of office, this_____ day of _____, 2013.

_____
Notary Public in and for the State of Texas

_____
My Commission Expires On:

KNOW ALL MEN BY THESE PRESENTS:

THAT, I, Gary Romatz, do hereby certify that I prepared this plat from an actual and accurate survey of the land and that the corner monuments shown thereon as "set" were properly placed under my personal supervision, in accordance with the Subdivision Ordinance of the City of Celina, Texas.

_____
Gary Romatz, Registered Professional Land Surveyor

_____
Texas Registration No.

STATE OF TEXAS
COUNTY OF DENTON

Before me, the undersigned authority, a Notary Public in and for the State of Texas, on this day personally appeared **Gary Romatz**, Registered Professional Land Surveyor, known to me to be the person whose name is subscribed to the foregoing instrument and acknowledged to me that he executed the same for the purpose and considerations therein expressed.

GIVEN UNDER MY HAND AND SEAL OF OFFICE this _____ day _____, 2013.

_____
Notary Public in and for the State of Texas

_____
My Commission Expires On:

Final Plat

Approved by the City of Celina for filing at the office of the County Clerk of Collin County, Texas

RECOMMENDED BY: Planning and Zoning Commission
City of Celina, Texas

_____ _____
Signature of Chairperson Date of Recommendation

APPROVED BY: City Council
City of Celina, Texas

_____ _____
Signature of Mayor Date of Approval

ATTEST:

_____ _____
City Secretary Date

PROPERTY LOCATION STATEMENT

This property is located in the corporate limits of the City of Celina, Collin County, Texas.

_____ _____
Signature of Mayor Date of Approval

ATTEST:

_____ _____
City Secretary Date

STANDARD NOTES:

1. Selling a portion of this addition by metes and bounds is a violation of city ordinance and state law, and is subject to fines and withholding of utilities and building permits.

2. The undersigned does hereby covenant and agree that he or she or they shall construct upon the fire lane easements, as dedicated as shown hereon, a hard surface in accordance with the City of Celina's paving standards for fire lane, and that he or she or they shall maintain the same in a state of good repair at all times and keep the same free and clear of any structures, fences, trees, shrubs, or other improvements or obstruction, including but not limited to the parking of motor vehicles, trailers, boats or other impediments to the accessibility of fire apparatus.

3. The undersigned does hereby covenant and agree that the access easement may be utilized by any person or the general public for ingress and egress to public vehicular and pedestrian use and access, and for Fire Department and emergency use in, along, upon and across said premises, with the right and privilege at all times of the City of Celina, its agents, employees, workmen and representatives having ingress, egress, and regress in, along, upon and across said premises.

4. The area or areas shown on the plat as "VAM" (Visibility, Access and Maintenance) Easement(s) are hereby given and granted to the city, its successors and assigns, as an easement to provide visibility, right of access for maintenance upon and across said VAM Easement. The city shall have the right but not the obligation to maintain any and all landscaping within the VAM Easement. Should the city exercise this maintenance right, then is shall be permitted to remove and dispose of any and all landscaping improvements, including without limitation, any trees, shrubs, flowers, ground cover and fixtures. The city may withdraw maintenance of the VAM Easement at any time. The ultimate maintenance responsibility for the VAM Easement shall rest with the owners. No building, fence, shrub, tree or other improvements or growths, which in any way may endanger or interfere with the visibility, shall be constructed in, on, over, or across the VAM Easement. The city shall also have the right but not the obligation to add any landscape improvements to the VAM Easement, to erect any traffic control devices or signs on the VAM Easement and to remove any obstruction thereon. The city, its successors, assigns, or agents shall have the right and privilege at all times to enter upon the VAM Easement or any part thereof for the purposes and with all rights and privileges set forth herein.

RECORD DRAWING

ALL INFORMATION SHOWN ON THESE PLANS WAS FURNISHED BY THE CONTRACTOR. ALL RESPONSIBILITY FOR THE ACCURACY BELONGS TO THE CONTRACTOR.

Duc Tran
USA PROFESSIONAL SERVICES GROUP, INC.

DATE: August 15, 2013

Developer/Owner:
D.R. HORTON - TEXAS, LTD.
4306 MILLER ROAD
ROWLETT, TEXAS 75088
Phone (214) 607 - 4244

FINAL PLAT

THE CARTER RANCH - PHASE VA
65 RESIDENTIAL LOTS
1 OPEN SPACE/COMMON AREA LOTS
13.5399 ACRES
SITUATED IN THE
JOHN CAHILL SURVEY ABSTRACT No. 171
CITY OF CELINA, COLLIN COUNTY, TEXAS

USA PROFESSIONAL SERVICES GROUP, INC.
TEXAS BOARD OF PROFESSIONAL ENGINEERS REGISTERED ENGINEERING FIRM F-1845
CIVIL ENGINEERS - SURVEYORS - PLANNERS LANDSCAPE ARCHITECTS
1525 VICEROY DRIVE
DALLAS, TEXAS 75235
(214) 634-3300 FAX (214) 634-3338

May 2013 2009016.02

CITY CASE NO. _____

Recording Information: Cabinet_____ Page_____

P:\Status\2009016.02\dwg\Plats 2009016_02-FP Ph 9A.dwg, 8/21/2013 4:11:38 PM, James Gardella

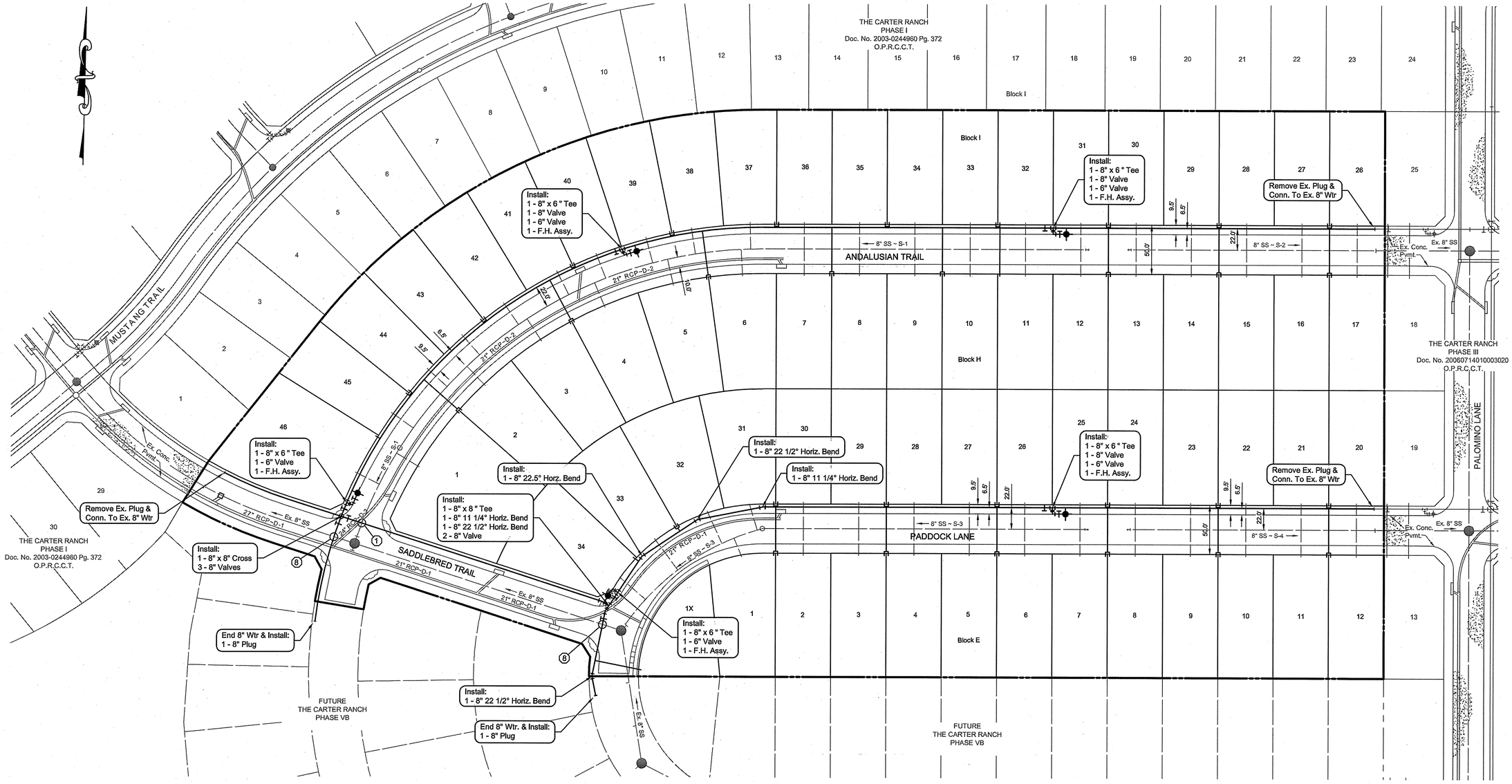

BENCHMARKS

TBM #1= Centerline of existing sanitary manhole at the centerline intersection of Appaloosa Lane and Equine Lane located in "The Carter Ranch Phase IIA". Elevation = 687.57'feet

TBM #2 = "X" Found in concrete at the centerline intersection of Equine Lane and Old Stables Drive located in "The Carter Ranch Phase IIA". Elevation =728.63'feet

CM #5 = Concrete monument with 5/8 inch iron rod with cap stamped "Huitt-Zollars" at the Southeast corner of the intersection of State Highway 289 and County Road 88, located approximately 45' feet South of the centerline of County Road 88 and 112' feet East of the centerline of State Highway 289 Elevation = 681.76' feet

GRAPHIC SCALE

50 0 25 50 100 200

(IN FEET)
1 inch = 50 ft.

RECORD DRAWING

ALL INFORMATION SHOWN ON THESE PLANS WAS FURNISHED BY THE CONTRACTOR. ALL RESPONSIBILITY FOR THE ACCURACY BELONGS TO THE CONTRACTOR.

Duc Tran
USA PROFESSIONAL SERVICES GROUP, INC.

DATE: August 15, 2013

LEGEND	
SYMBOL	DESCRIPTION
	11-1/4° Horizontal Bend
	22-1/2° Horizontal Bend
	90° Horizontal Bend
	Valve
	Tee
	Fire Hydrant
	Water Services
	Plug
	Water Crosshairs
	Water Main
	Water Service
①	Water/Sanitary Sewer Crossing Case # (See Sheet 23 For Crossing Details)

Notes:
See Sheet 2 For General Notes
See Sheets 21 & 22 For Water Details &
Sheets 23 & 24 For Sanitary Sewer Details

REV	DESCRIPTION	DATE

THE CARTER RANCH - PHASE VA
CITY OF CELINA, COLLIN COUNTY, TEXAS

WATER PLAN

19 FM LTD.
1221 North Interstate 35, Suite 200
Carrollton, Texas 75006
Phone (469) 892-7200 Fax (469) 892-7201

STATE OF TEXAS
JAMES SCOTT YOUNG
69031
REGISTERED
PROFESSIONAL ENGINEER

USA PROFESSIONAL SERVICES GROUP, INC.
TEXAS BOARD OF PROFESSIONAL ENGINEERS
REGISTERED ENGINEERING FIRM F-1845
CIVIL ENGINEERS • SURVEYORS
PLANNERS • LANDSCAPE ARCHITECTS
1525 VICEROY DRIVE
DALLAS, TEXAS 75235
(214) 634-3300 FAX (214) 634-3338

DATE: January 2013
SCALE: 1" = 50'H
SHEET: 5 OF 28
PROJECT NO. 2009016.02

P:\Sdesign\2009016.02\Dwg\2009016_02-wp.dwg, Layout1, 1/15/2013 9:43:38 AM, James Gardella

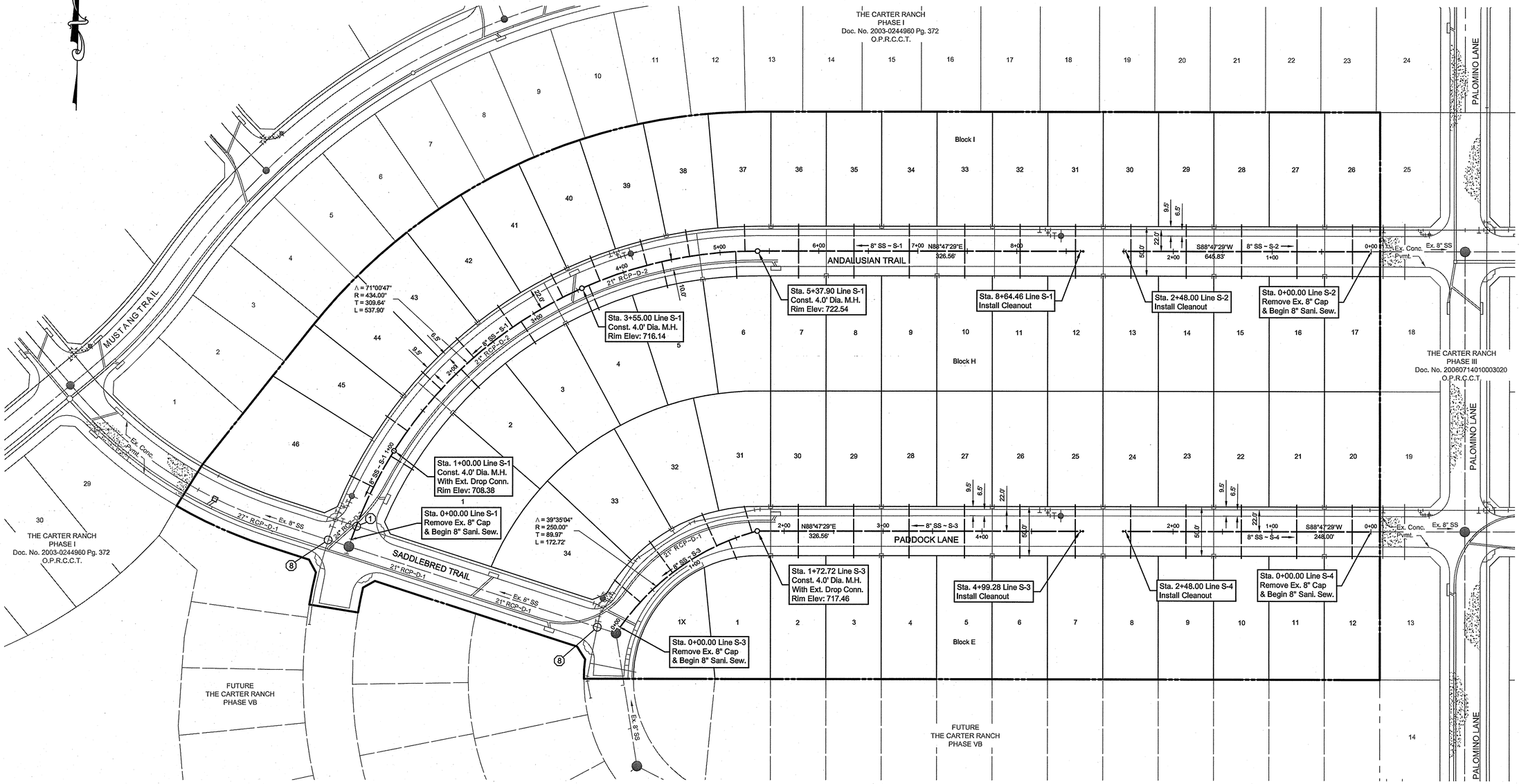

BENCHMARKS

TBM #1= Centerline of existing sanitary manhole at the centerline intersection of Appaloosa Lane and Equine Lane located in "The Carter Ranch Phase IIA". Elevation = 687.57'feet

TBM #2 = "X" Found in concrete at the centerline intersection of Equine Lane and Old Stables Drive located in "The Carter Ranch Phase IIA". Elevation =728.63'feet

CM #5 = Concrete monument with 5/8 inch iron rod with cap stamped "Huitt-Zollars" at the Southeast corner of the intersection of State Highway 289 and County Road 88, located approximately 45' feet South of the centerline of County Road 88 and 112' feet East of the centerline of State Highway 289 Elevation = 681.76' feet

GRAPHIC SCALE

50 0 25 50 100 200

(IN FEET)
1 inch = 50 ft.

RECORD DRAWING

ALL INFORMATION SHOWN ON THESE PLANS WAS FURNISHED BY THE CONTRACTOR. ALL RESPONSIBILITY FOR THE ACCURACY BELONGS TO THE CONTRACTOR.

Duc Tran
USA PROFESSIONAL SERVICES GROUP, INC.

DATE: August 15, 2013

LEGEND	
SYMBOL	DESCRIPTION
○	Sanitary Sewer Manhole
⊢○	Sanitary Sewer Cleanout
——	Sanitary Sewer Main
— — —	Sanitary Sewer Service
○—1	Water/Sanitary Sewer Crossing Case # (See Sheet 23 For Crossing Details)

Notes:
See Sheet 2 For General Notes
See Sheets 21 & 22 For Water Details &
Sheets 23 & 24 For Sanitary Sewer Details

REV	DESCRIPTION	DATE

THE CARTER RANCH - PHASE VA
CITY OF CELINA, COLLIN COUNTY, TEXAS
SANITARY SEWER PLAN

19 FM LTD.
1221 North Interstate 35, Suite 200
Carrollton, Texas 75006
Phone (469) 892-7200 Fax (469) 892-7201

STATE OF TEXAS
JAMES SCOTT YOUNG
69031
REGISTERED
PROFESSIONAL ENGINEER

USA PROFESSIONAL SERVICES GROUP, INC.
TEXAS BOARD OF PROFESSIONAL ENGINEERS
REGISTERED ENGINEERING FIRM F-1845
CIVIL ENGINEERS • SURVEYORS
PLANNERS • LANDSCAPE ARCHITECTS
1525 VICEROY DRIVE
DALLAS, TEXAS 75235
(214) 634-3300 FAX (214) 634-3338

DATE: January 2013
SCALE: 1" = 50'H
SHEET: 6 OF 28
PROJECT NO. 2009016.02

P:\Sdskengn\2009016.02\Dwg\2009016_02-esp.dwg, Layout1, 1/15/2013 9:45:28 AM, James Gardella

Profile View of S-1

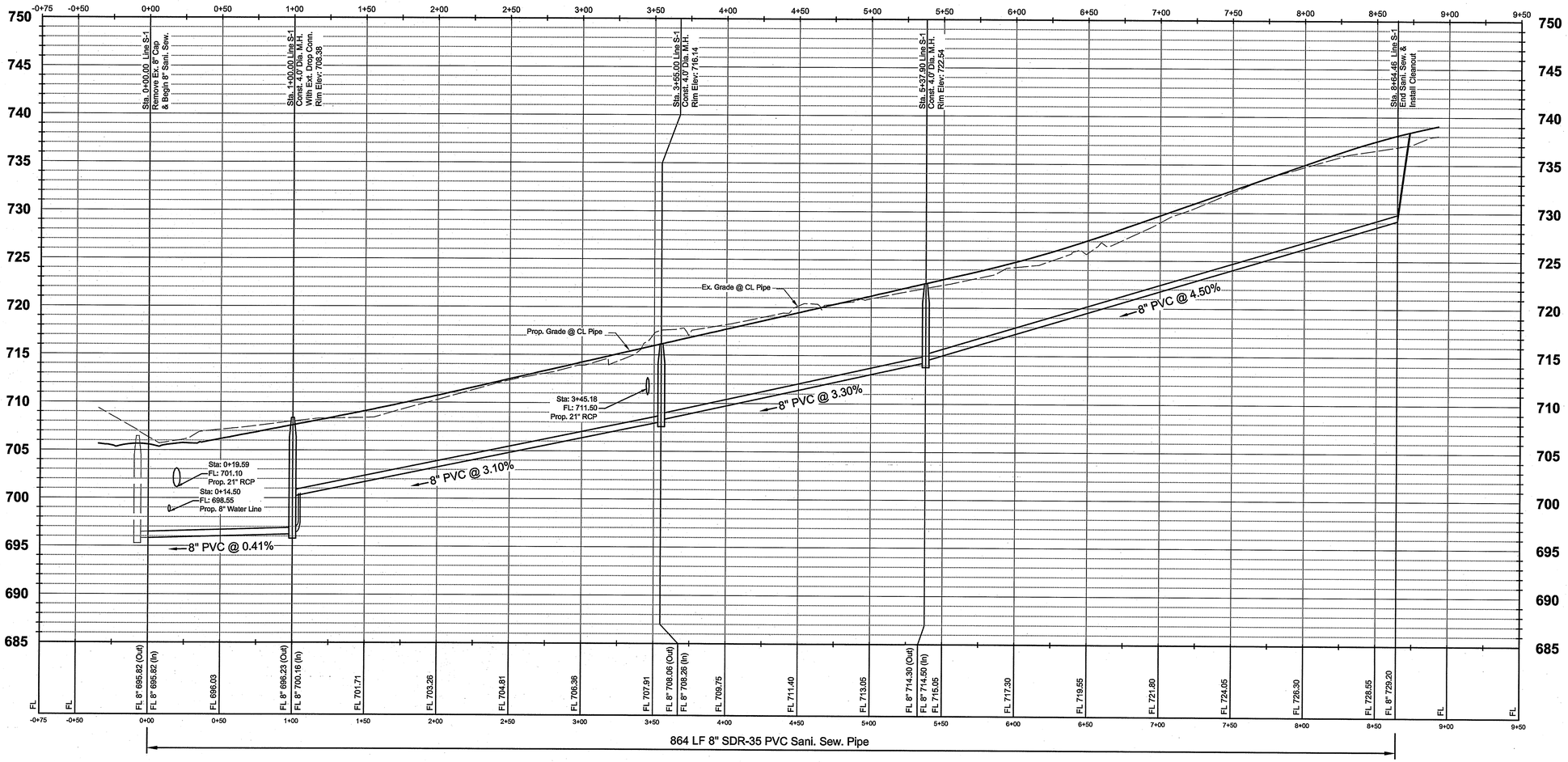

BENCHMARKS

TBM #1= Centerline of existing sanitary manhole at the centerline intersection of Appaloosa Lane and Equine Lane located in "The Carter Ranch Phase IIA". Elevation = 687.57'feet

TBM #2 = "X" Found in concrete at the centerline intersection of Equine Lane and Old Stables Drive located in "The Carter Ranch Phase IIA". Elevation =728.63feet

CM #5 = Concrete monument with 5/8 inch iron rod with cap stamped "Huitt-Zollars" at the Southeast corner of the intersection of State Highway 289 and County Road 88, located approximately 45' feet South of the centerline of County Road 88 and 112' feet East of the centerline of State Highway 289 Elevation = 681.76' feet

GRAPHIC SCALE

40 0 20 40 80 160

(IN FEET)
1 inch = 40 ft.

RECORD DRAWING

ALL INFORMATION SHOWN ON THESE PLANS WAS FURNISHED BY THE CONTRACTOR. ALL RESPONSIBILITY FOR THE ACCURACY BELONGS TO THE CONTRACTOR.

Duc Tran
USA PROFESSIONAL SERVICES GROUP, INC.

DATE: August 15, 2013

Notes:
See Sheet 2 For General Notes
See Sheets 21 & 22 For Water Details &
Sheets 23 & 24 For Sanitary Sewer & TCEQ Crossing Details

REV	DESCRIPTION	DATE

THE CARTER RANCH - PHASE VA
CITY OF CELINA, COLLIN COUNTY, TEXAS

SANITARY SEWER PROFILES
LINE S-1

19 FM LTD.
1221 North Interstate 35, Suite 200
Carrollton, Texas 75006
Phone (469) 892-7200 Fax (469) 892-7201

STATE OF TEXAS
JAMES SCOTT YOUNG
69031
REGISTERED PROFESSIONAL ENGINEER

USA PROFESSIONAL SERVICES GROUP, INC.
TEXAS BOARD OF PROFESSIONAL ENGINEERS
REGISTERED ENGINEERING FIRM F-1845
CIVIL ENGINEERS • SURVEYORS
PLANNERS • LANDSCAPE ARCHITECTS
1525 VICEROY DRIVE
DALLAS, TEXAS 75235
(214) 634-3300 FAX (214) 634-3338

DATE: January 2013
SCALE: 1" = 40'H 1" = 6'V
SHEET: 7 OF 28
PROJECT NO. 2009016.02

P:\Stakeng\2009016.02\Dwg\2009016_02-sspr.dwg, Layout1, 1/15/2013 9:47:41 AM, James Gastella

Profile View of S-3

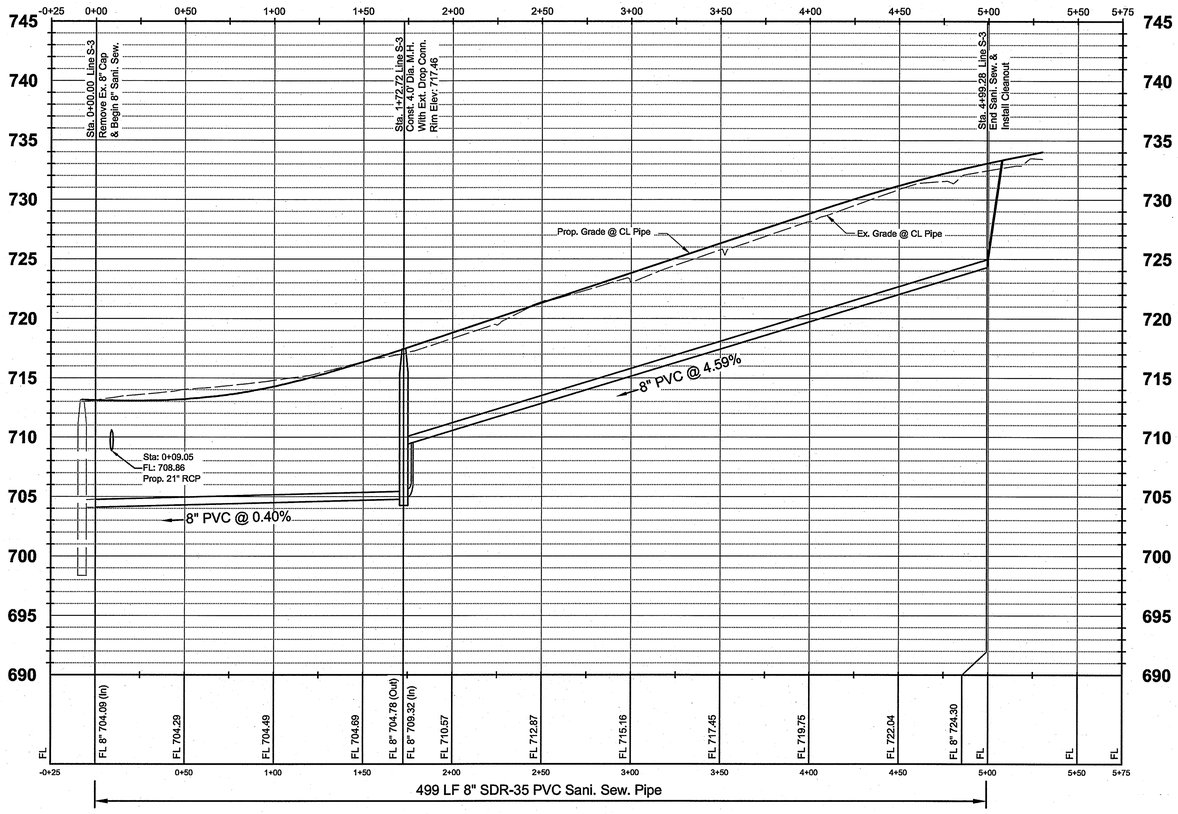

Profile View of S-2

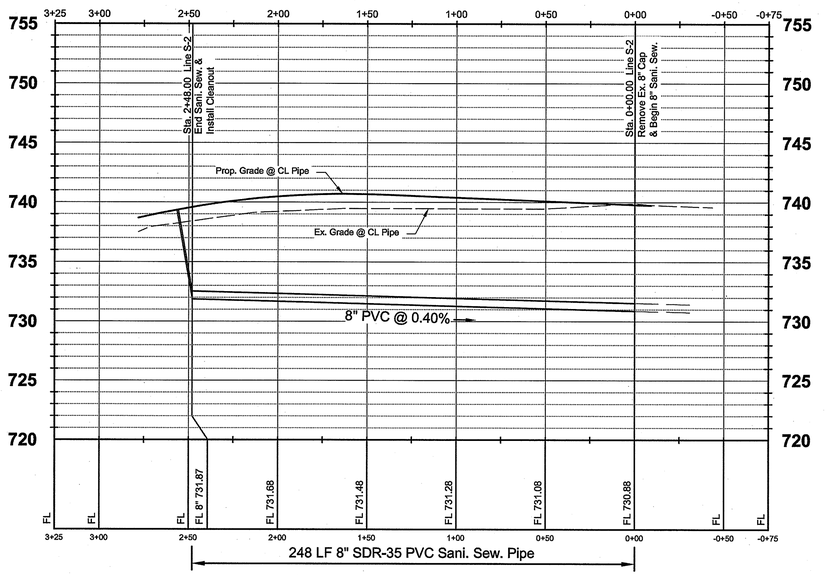

Profile View of S-4

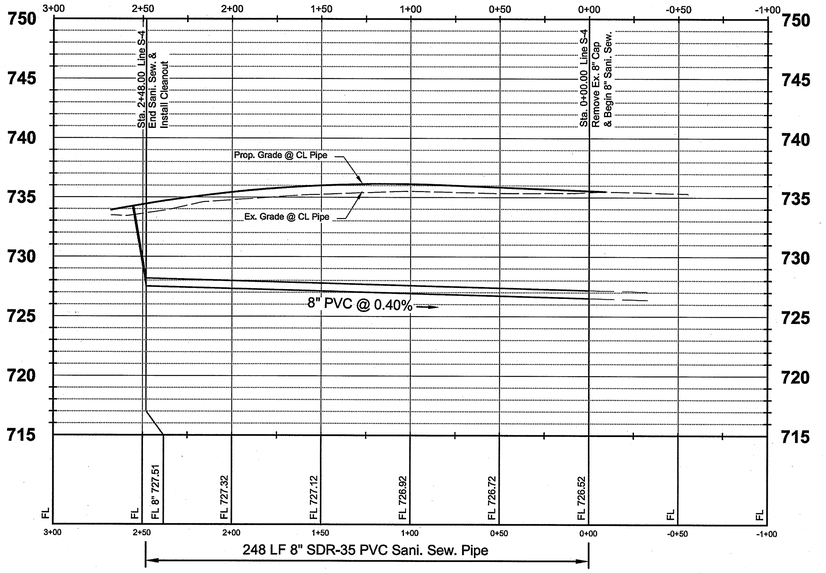

BENCHMARKS

TBM #1= Centerline of existing sanitary manhole at the centerline intersection of Appaloosa Lane and Equine Lane located in "The Carter Ranch Phase IIA". Elevation = 687.57'feet

TBM #2 = "X" Found in concrete at the centerline intersection of Equine Lane and Old Stables Drive located in "The Carter Ranch Phase IIA". Elevation =728.63'feet

CM #5 = Concrete monument with 5/8 inch iron rod with cap stamped "Huitt-Zollars" at the Southeast corner of the intersection of State Highway 289 and County Road 88, located approximately 45' feet South of the centerline of County Road 88 and 112' feet East of the centerline of State Highway 289 Elevation = 681.76' feet

GRAPHIC SCALE

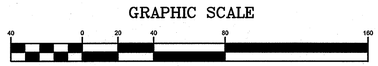

(IN FEET)
1 inch = 40 ft.

RECORD DRAWING

ALL INFORMATION SHOWN ON THESE PLANS WAS FURNISHED BY THE CONTRACTOR. ALL RESPONSIBILITY FOR THE ACCURACY BELONGS TO THE CONTRACTOR.

Duc Tran
USA PROFESSIONAL SERVICES GROUP, INC.

DATE: August 15, 2013

Notes:
See Sheet 2 For General Notes
See Sheets 21 & 22 For Water Details &
Sheets 23 & 24 For Sanitary Sewer & TCEQ Crossing Details

REV	DESCRIPTION	DATE

THE CARTER RANCH - PHASE VA
CITY OF CELINA, COLLIN COUNTY, TEXAS

SANITARY SEWER PROFILES
LINES S-2 S-3 & S-4

19 FM LTD.
1221 North Interstate 35, Suite 200
Carrollton, Texas 75006
Phone (469) 892-7200 Fax (469) 892-7201

STATE OF TEXAS
JAMES SCOTT YOUNG
69031
REGISTERED PROFESSIONAL ENGINEER
1/15/13

USA PROFESSIONAL SERVICES GROUP, INC.
TEXAS BOARD OF PROFESSIONAL ENGINEERS
REGISTERED ENGINEERING FIRM F-1845
CIVIL ENGINEERS • SURVEYORS
PLANNERS • LANDSCAPE ARCHITECTS
1525 VICEROY DRIVE
DALLAS, TEXAS 75235
(214) 634-3300 FAX (214) 634-3338

DATE: January 2013
SCALE: 1" = 40'H 1" = 6'V
SHEET: 8 OF 28
PROJECT NO. 2009016.02

P:\Sdskengn\2009016.02\Dwg\2009016_02-ssprf.dwg, Layout2, 1/15/2013 9:50:02 AM, James Gardella

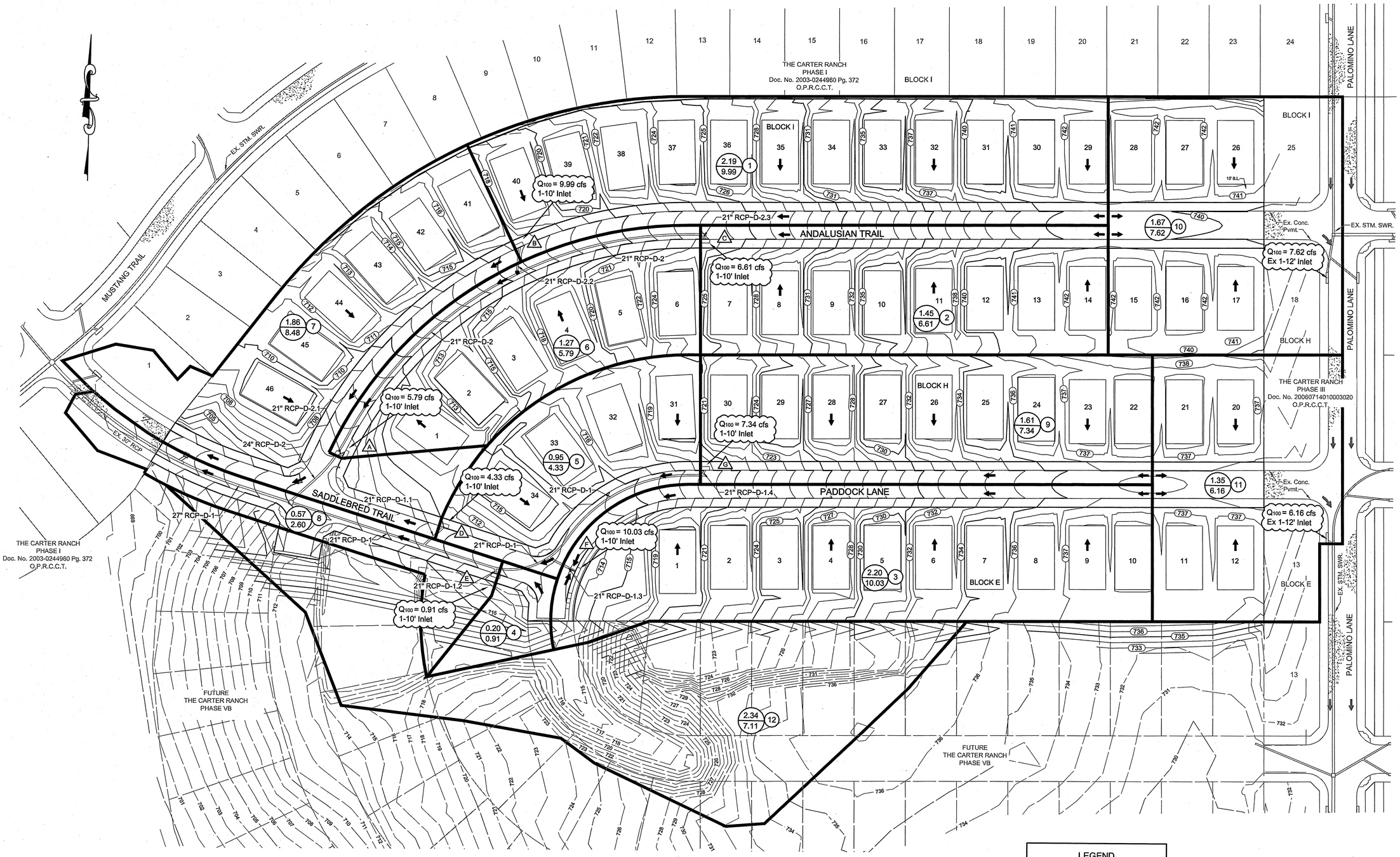

BENCHMARKS

TBM #1= Centerline of existing sanitary manhole at the centerline intersection of Appaloosa Lane and Equine Lane located in "The Carter Ranch Phase IIA". Elevation = 687.57'feet

TBM #2 = "X" Found in concrete at the centerline intersection of Equine Lane and Old Stables Drive located in "The Carter Ranch Phase IIA". Elevation =728.63'feet

CM #5 = Concrete monument with 5/8 inch iron rod with cap stamped "Huitt-Zollars" at the Southeast corner of the intersection of State Highway 289 and County Road 88, located approximately 45' feet South of the centerline of County Road 88 and 112' feet East of the centerline of State Highway 289 Elevation = 681.76' feet

GRAPHIC SCALE

50 0 25 50 100 200

(IN FEET)
1 inch = 50 ft.

SURFACE RUNOFF

NO.	ACRES	PRE DEVELOPMENT				POST DEVELOPMENT			
		C	Tc	I100	Q100	C	Tc	I100	Q100
1	2.19	0.40	15	7.60	6.66	0.60	15	7.60	9.99
2	1.45	0.40	15	7.60	4.41	0.60	15	7.60	6.61
3	2.20	0.40	15	7.60	6.69	0.60	15	7.60	10.03
4	0.20	0.40	15	7.60	0.61	0.60	15	7.60	0.91
5	0.95	0.40	15	7.60	2.89	0.60	15	7.60	4.33
6	1.27	0.40	15	7.60	3.86	0.60	15	7.60	5.79
7	1.86	0.40	15	7.60	5.65	0.60	15	7.60	8.48
8	0.57	0.40	15	7.60	1.73	0.60	15	7.60	2.60
9	1.61	0.40	15	7.60	4.89	0.60	15	7.60	7.34
10	1.67	0.40	15	7.60	5.08	0.60	15	7.60	7.62
11	1.35	0.40	15	7.60	4.10	0.60	15	7.60	6.16
12	2.34	0.40	15	7.60	7.11	0.40	15	7.60	7.11

LEGEND

SYMBOL	DESCRIPTION
Acres / CFS	ACRES Q100 CRITERIA
(1)	DRAINAGE AREA
←	DIRECTION OF FLOW
A	INLET DESIGNATOR

RECORD DRAWING

ALL INFORMATION SHOWN ON THESE PLANS WAS FURNISHED BY THE CONTRACTOR. ALL RESPONSIBILITY FOR THE ACCURACY BELONGS TO THE CONTRACTOR.

Duc Tran
USA PROFESSIONAL SERVICES GROUP, INC.
DATE: August 15, 2013

REV	DESCRIPTION	DATE

THE CARTER RANCH - PHASE VA
CITY OF CELINA, COLLIN COUNTY, TEXAS
DRAINAGE AREA MAP

19 FM LTD.
1221 North Interstate 35, Suite 200
Carrollton, Texas 75006
Phone (469) 892-7200 Fax (469) 892-7201

1/15/13

STATE OF TEXAS
JAMES SCOTT YOUNG
69031
REGISTERED PROFESSIONAL ENGINEER

USA PROFESSIONAL SERVICES GROUP, INC.
TEXAS BOARD OF PROFESSIONAL ENGINEERS
REGISTERED ENGINEERING FIRM F-1845
CIVIL ENGINEERS • SURVEYORS
PLANNERS • LANDSCAPE ARCHITECTS
1525 VICEROY DRIVE
DALLAS, TEXAS 75235
(214) 634-3300 FAX (214) 634-3338

DATE: January 2013
SCALE: 1" = 50'H
SHEET: 9 OF 28
PROJECT NO. 2009016.02

P:\Stakengn\2009016.02\Dwg\2009016_02-da.dwg, Layout1, 1/15/2013 9:51:52 AM, James Gandella

DRAINAGE CALCULATIONS

DESIGN POINT DOWNSTREAM FROM STATION	DESIGN POINT UPSTREAM TO STATION	DIST (FT)	DRAINAGE AREA INCREMENTAL INLET / LINE DESIGNATOR	DRAINAGE AREA INCREMENTAL AREA (AC)	DRAINAGE AREA TOTAL AREA (AC)	RUNOFF FLOW (CFS)	FROM UPSTREAM INLET (cfs)	INLET BYPASS (CFS)	FLOW IN PIPE (cfs)	PIPE FLOW CAPACITY (cfs)	PIPE SIZE	PIPE TYPE	FRICTIONAL SLOPE "S_f" (FT/FT)	HYDRAULIC GRADIENT ELEVATIONS DOWNSTREAM (FT)	HYDRAULIC GRADIENT ELEVATIONS UPSTREAM (FT)	HEAD LOSS AT CHANGE IN SECTION FLOW IN "V1" (FPS)	HEAD LOSS AT CHANGE IN SECTION FLOW OUT "V2" (FPS)	HEAD LOSS AT CHANGE IN SECTION $V_2^2/2G$ (FT)	HEAD LOSS AT CHANGE IN SECTION $V_1^2/2G$ (FT)	HEAD LOSS AT CHANGE IN SECTION "K_j"	HEAD LOSS AT CHANGE IN SECTION $K_jV_1^2/2$ (FT)	HEAD LOSS AT CHANGE IN SECTION HEAD LOSS "H_L" (FEET)	ELEV OF INVERT AT DESIGN POINT PIPE DOWNSTREAM (FT)	ELEV OF INVERT AT DESIGN POINT PIPE UPSTREAM (FT)	ELEV OF INVERT AT DESIGN POINT PIPE SLOPE (FT/FT)	COMMENTS
D-1																											
6+29.01	6+32.01	3.00	-	0.00	0.00	0.00	0.00	0.00	0.00	24.08	21	RCP	0.0000	714.41	714.41	0.00	0.00	0.00	0.00	0.00	0.00	0.00	712.66	712.73	0.0230	PARTIAL FLOW
6+13.63	6+29.01	15.38	D-1.4	1.61	1.61	7.34	0.00	0.00	7.34	24.08	21	RCP	0.0021	714.06	714.09	0.00	3.05	0.14	0.00	0.00	0.00	0.14	712.31	712.66	0.0230	PARTIAL FLOW
4+57.40	6+13.63	156.23	-	0.00	1.61	0.00	0.00	0.00	7.34	24.08	21	RCP	0.0021	710.47	710.80	3.05	3.05	0.14	0.14	0.00	0.00	0.00	708.72	712.31	0.0230	PARTIAL FLOW
4+29.11	4+57.40	28.29	-	0.00	1.61	0.00	0.00	0.00	7.34	24.08	21	RCP	0.0021	709.82	709.88	3.05	3.05	0.14	0.14	0.00	0.00	0.00	708.07	708.72	0.0230	PARTIAL FLOW
3+67.74	4+29.11	61.37	D-1.3	2.20	3.81	10.03	0.00	0.00	17.37	24.08	21	RCP	0.0120	708.42	709.16	3.05	7.23	0.81	0.14	0.00	0.00	0.67	706.66	708.07	0.0230	PARTIAL FLOW
3+60.61	3+67.74	7.13	D-1.2	0.20	4.01	0.91	0.00	0.00	18.28	24.08	21	RCP	0.0132	708.24	708.33	7.23	7.60	0.90	0.81	0.00	0.00	0.09	706.49	706.66	0.0230	PARTIAL FLOW
2+85.79	3+60.61	74.82	-	0.00	4.01	0.00	0.00	0.00	18.28	24.08	21	RCP	0.0132	706.93	707.92	7.60	7.60	0.90	0.90	0.00	0.00	0.00	704.77	706.49	0.0230	PARTIAL FLOW
1+33.34	2+85.79	152.45	D-1.1	0.95	4.96	4.33	0.00	0.00	22.61	24.08	21	RCP	0.0203	703.37	706.46	7.60	9.40	1.37	0.90	0.00	0.00	0.48	701.26	704.77	0.0230	PARTIAL FLOW
0+73.44	1+33.34	59.89	D-2	4.91	9.87	22.39	0.00	0.00	45.00	44.98	27	RCP	0.0210	701.49	702.75	9.40	11.32	1.99	1.37	0.00	0.00	0.62	699.24	700.50	0.0210	FULL FLOW
0+00.00	0+73.44	73.44	-	0.00	9.87	0.00	0.00	0.00	45.00	44.98	27	RCP	0.0210	699.95	701.49	11.32	11.32	1.99	1.99	0.00	0.00	0.00	697.70	699.24	0.0210	FULL FLOW
D-1.1																											
0+00.00	0+29.44	29.44	Inlet D	0.95	0.95	4.33	0.00	0.00	4.33	32.31	21	RCP	0.0007	703.37	703.39	0.00	1.80	0.05	0.00	0.00	0.00	0.05	703.96	706.27	0.0414	PARTIAL FLOW
D-1.2																											
0+00.00	0+06.74	6.74	Inlet E	0.20	0.20	0.91	0.00	0.00	0.91	61.50	21	RCP	0.0000	708.42	708.42	0.00	0.38	0.00	0.00	0.00	0.00	0.00	706.66	707.67	0.1500	PARTIAL FLOW
D-1.3																											
0+00.00	0+33.19	33.19	Inlet F	2.20	2.20	10.03	0.00	0.00	10.03	30.44	21	RCP	0.0040	709.82	709.95	0.00	4.17	0.27	0.00	0.00	0.00	0.27	708.07	709.29	0.0368	PARTIAL FLOW
D-1.4																											
0+00.00	0+06.35	6.35	Inlet G	1.61	1.61	7.34	0.00	0.00	7.34	61.50	21	RCP	0.0021	714.41	714.42	0.00	3.05	0.14	0.00	0.00	0.00	0.14	712.66	713.61	0.1500	PARTIAL FLOW
D-2																											
566.29	571.29	5.00	-	0.00	0.00	0.00	0.00	0.00	0.00	30.54	21	RCP	0.0000	719.62	706.69	0.00	0.00	0.00	0.00	0.00	0.00	0.00	717.87	718.06	0.0370	PARTIAL FLOW
550.91	566.29	15.39	Inlet C	1.45	1.45	6.61	0.00	0.00	6.61	30.54	21	RCP	0.0017	719.05	719.08	0.00	2.75	0.12	0.00	0.00	0.00	0.12	717.30	717.87	0.0370	PARTIAL FLOW
356.89	550.91	194.01	-	0.00	1.45	0.00	0.00	0.00	6.61	27.50	21	RCP	0.0017	711.89	712.23	2.75	2.75	0.12	0.12	0.00	0.00	0.00	710.14	717.30	0.0300	PARTIAL FLOW
200.00	356.89	156.89	Inlet B	2.19	3.64	9.99	0.00	0.00	16.60	27.50	21	RCP	0.0109	707.18	708.89	2.75	6.90	0.74	0.12	0.43	0.05	0.69	705.43	710.14	0.0300	PARTIAL FLOW
90.31	200.00	109.69	-	0.00	3.64	0.00	0.00	0.00	16.60	27.50	21	RCP	0.0109	704.29	705.49	6.90	6.90	0.74	0.74	0.00	0.00	0.00	702.14	705.43	0.0300	PARTIAL FLOW
74.76	90.31	15.55	-	0.00	3.64	0.00	0.00	0.00	16.60	27.50	21	RCP	0.0109	704.12	704.29	6.90	6.90	0.74	0.74	0.00	0.00	0.00	701.67	702.14	0.0300	FULL FLOW
37.32	74.76	37.43	Inlet A	1.27	4.91	5.79	0.00	0.00	22.39	22.67	24	RCP	0.0097	703.71	704.07	6.90	7.13	0.79	0.74	0.00	0.00	0.05	701.05	701.42	0.0100	FULL FLOW
2.69	37.32	34.63	-	0.00	4.91	0.00	0.00	0.00	22.39	22.67	24	RCP	0.0097	703.37	703.71	7.13	7.13	0.79	0.79	0.00	0.00	0.00	700.70	701.05	0.0100	FULL FLOW
D-2.1																											
0+00.00	0+04.96	4.96	Inlet A	1.27	1.27	5.79	0.00	0.00	5.79	61.46	21	RCP	0.0013	704.12	704.13	0.00	2.41	0.09	0.00	0.00	0.00	0.09	701.67	702.42	0.1498	PARTIAL FLOW
D-2.2																											
0+00.00	0+29.73	29.73	Inlet B	2.19	2.19	9.99	0.00	0.00	9.99	44.35	21	RCP	0.0040	711.89	712.01	0.00	4.16	0.27	0.00	0.00	0.00	0.27	710.98	712.28	0.0780	PARTIAL FLOW
D-2.3																											
0+00.00	0+06.34	6.34	Inlet C	1.45	1.45	6.61	0.00	0.00	6.61	61.50	21	RCP	0.0017	719.62	719.63	0.00	2.75	0.12	0.00	0.00	0.00	0.12	717.89	718.84	0.1500	PARTIAL FLOW

* Refer To Plan and Profiles Sheets For Partial Flow Velocities Indicated As Partial Flow Pipe Segments In Comments.

GUTTER DEPTH	
No.	Depth
A	0.39
B	0.42
C	0.37
D	0.32
E	0.17
F	0.42
G	0.37

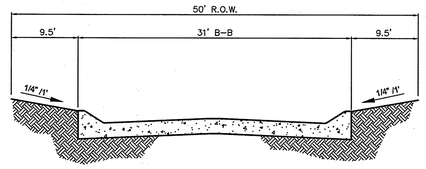

STREET CAPACITY
(5" PARABOLIC CROWN - 31' B-B PAVEMENT)

A = 6.69 SF
WP = 30.15 FT.
R = 0.22 FT.

$$C = \frac{(1.486)(6.69)(0.22)^{2/3} S^{1/2}}{(0.0175)}$$

$C = 207.01\ S^{1/2} cfs$

RECORD DRAWING

ALL INFORMATION SHOWN ON THESE PLANS WAS FURNISHED BY THE CONTRACTOR. ALL RESPONSIBILITY FOR THE ACCURACY BELONGS TO THE CONTRACTOR.

Duc Tran
USA PROFESSIONAL SERVICES GROUP, INC.
DATE: August 15, 2013

REV	DESCRIPTION	DATE

THE CARTER RANCH - PHASE VA
CITY OF CELINA, COLLIN COUNTY, TEXAS

STORM SEWER CALCULATIONS

19 FM LTD.
1221 North Interstate 35, Suite 200
Carrollton, Texas 75006
Phone (469) 892-7200 Fax (469) 892-7201

STATE OF TEXAS
JAMES SCOTT YOUNG
69031
REGISTERED
PROFESSIONAL ENGINEER

USA PROFESSIONAL SERVICES GROUP, INC.
TEXAS BOARD OF PROFESSIONAL ENGINEERS
REGISTERED ENGINEERING FIRM F-1845
CIVIL ENGINEERS • SURVEYORS
PLANNERS • LANDSCAPE ARCHITECTS
1525 VICEROY DRIVE
DALLAS, TEXAS 75235
(214) 634-3300 FAX (214) 634-3338

DATE: January 2013
SCALE: 1" = 1"
SHEET: 10 OF 28
PROJECT NO. 2009016.02

P:\Stabkemp\2009016.02\Dwg\2009016_02-sd calc.dwg, Layout1, 1/15/2013 5:53:18 AM, James Gandella

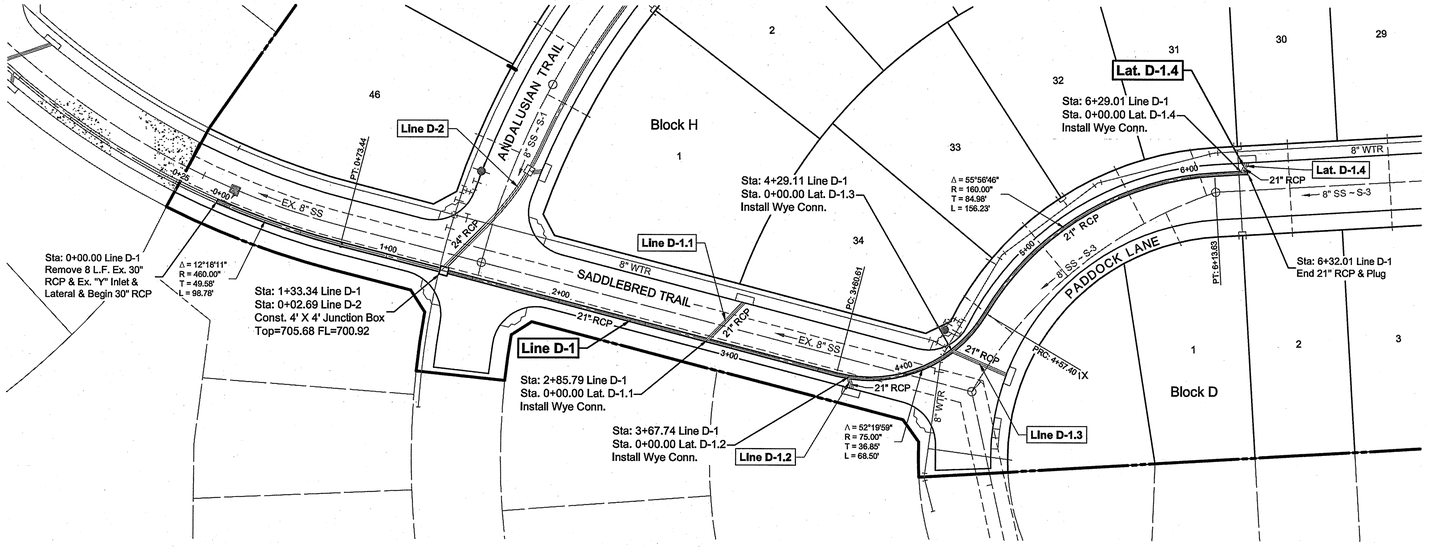

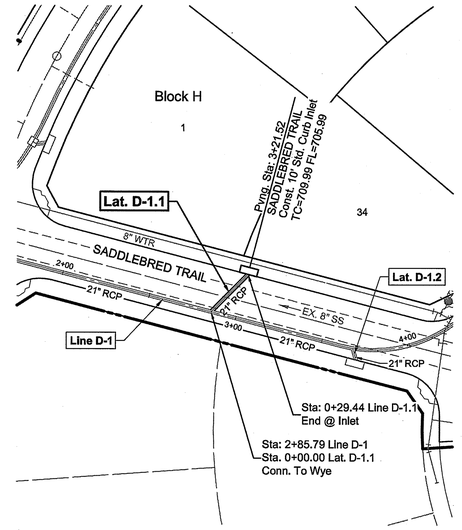

Profile View of D-1

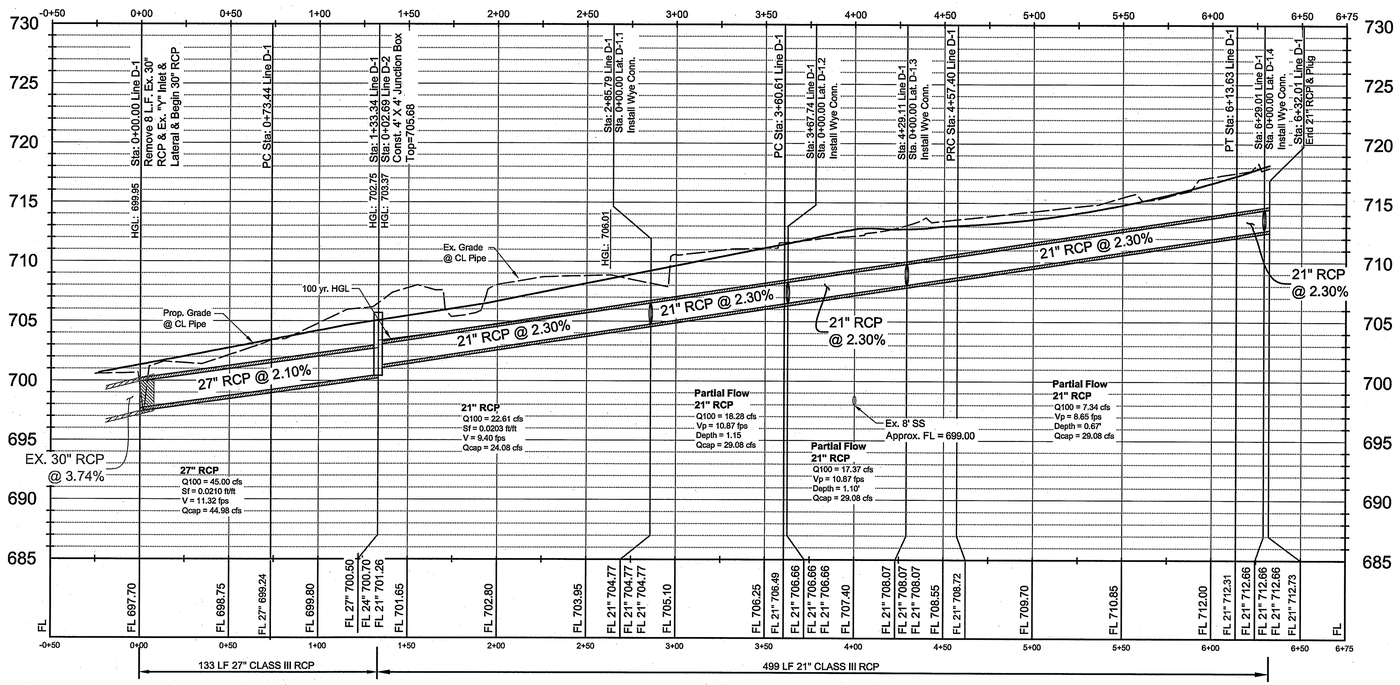

Profile View of D-1.1

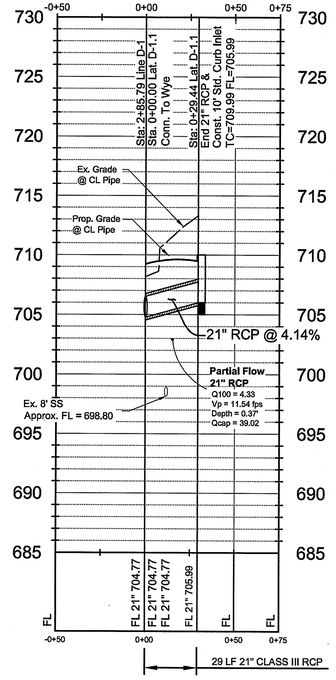

BENCHMARKS

TBM #1= Centerline of existing sanitary manhole at the centerline intersection of Appaloosa Lane and Equine Lane located in "The Carter Ranch Phase IIA". Elevation = 687.57'feet

TBM #2 = "X" Found in concrete at the centerline intersection of Equine Lane and Old Stables Drive located in "The Carter Ranch Phase IIA". Elevation =728.63'feet

CM #5 = Concrete monument with 5/8 inch iron rod with cap stamped "Huitt-Zollars" at the Southeast corner of the intersection of State Highway 289 and County Road 88, located approximately 45' feet South of the centerline of County Road 88 and 112' feet East of the centerline of State Highway 289 Elevation = 681.76' feet

GRAPHIC SCALE

40 0 20 40 80 160

(IN FEET)

1 inch = 40 ft.

RECORD DRAWING

ALL INFORMATION SHOWN ON THESE PLANS WAS FURNISHED BY THE CONTRACTOR. ALL RESPONSIBILITY FOR THE ACCURACY BELONGS TO THE CONTRACTOR.

Duc Tran
USA PROFESSIONAL SERVICES GROUP, INC.

DATE: August 15, 2013

NOTE:
ALL CURVES IN THE STORM SEWER LINE MUST USE B2 RADIAL PIPE

REV	DESCRIPTION	DATE

THE CARTER RANCH - PHASE VA
CITY OF CELINA, COLLIN COUNTY, TEXAS

STORM SEWER PLAN & PROFILE
LINE D-1
LATERAL D-1.1

19 FM LTD.
1221 North Interstate 35, Suite 200
Carrollton, Texas 75006
Phone (469) 892-7200 Fax (469) 892-7201

1/15/13

STATE OF TEXAS
JAMES SCOTT YOUNG
69031
REGISTERED PROFESSIONAL ENGINEER

USA PROFESSIONAL SERVICES GROUP, INC.
TEXAS BOARD OF PROFESSIONAL ENGINEERS
REGISTERED ENGINEERING FIRM F-1945
CIVIL ENGINEERS • SURVEYORS
PLANNERS • LANDSCAPE ARCHITECTS
1525 VICEROY DRIVE
DALLAS, TEXAS 75235
(214) 634-3300 FAX (214) 634-3338

DATE: January 2013
SCALE: 1" = 40'H/6'V
SHEET: 11 OF 28
PROJECT NO. 2009016.02

P:\Stakeregn\2009016.02\Dwg\2009016_02-sd (d-1).dwg, Sheet - (1), 1/15/2013 9:55:30 AM, James Gandella

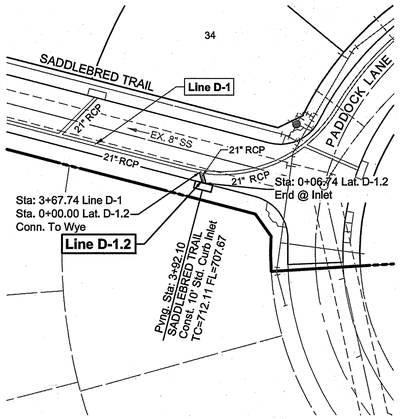

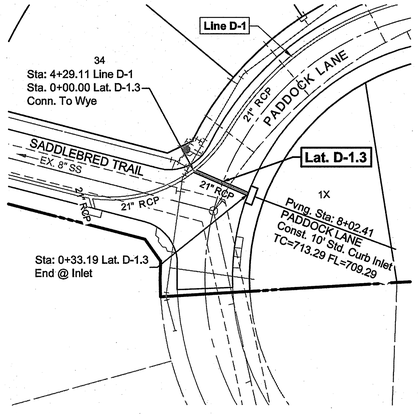

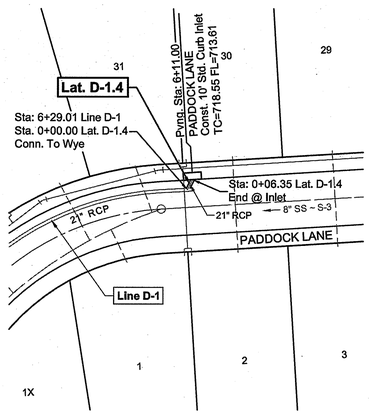

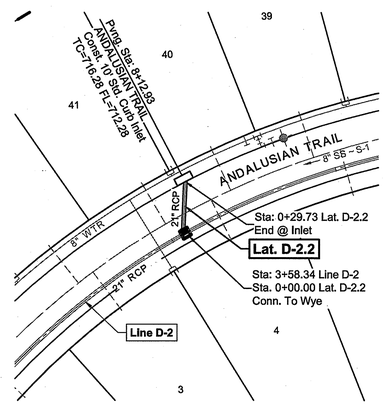

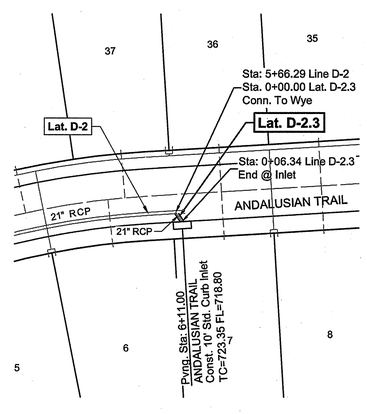

Profile View of D-1.2

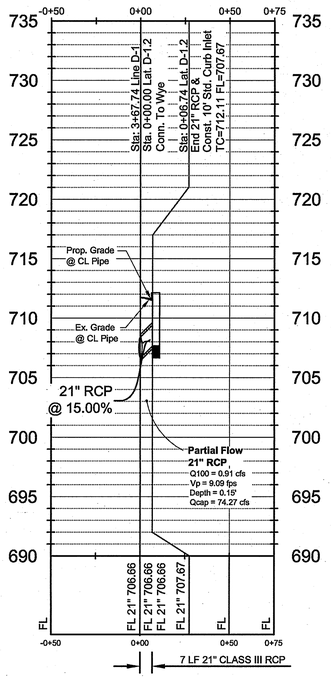

Profile View of D-1.3

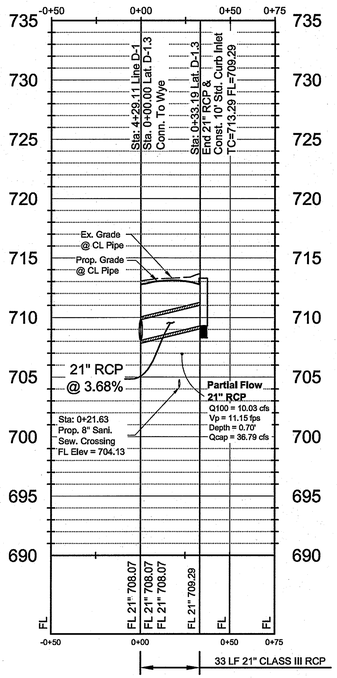

Profile View of D-1.4

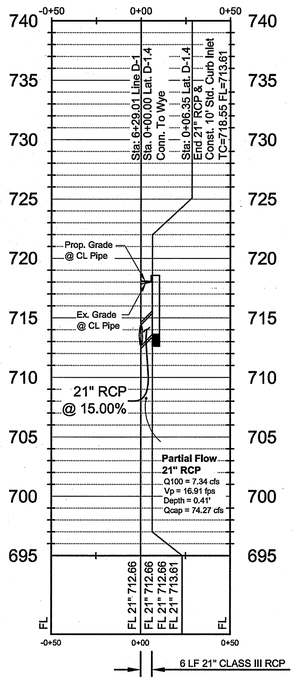

Profile View of D-2.2

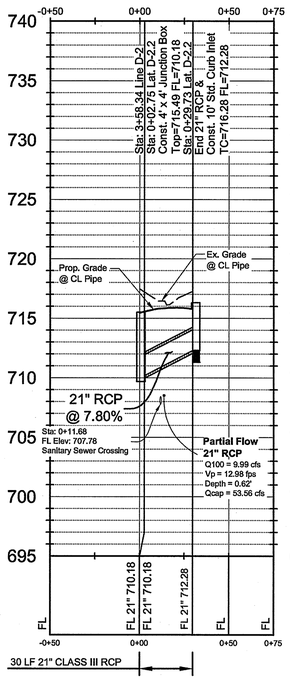

Profile View of D-2.3

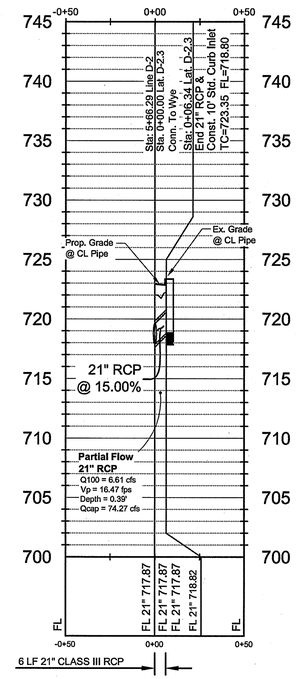

BENCHMARKS

TBM #1= Centerline of existing sanitary manhole at the centerline intersection of Appaloosa Lane and Equine Lane located in "The Carter Ranch Phase IIA". Elevation = 687.57'feet

TBM #2 = "X" Found in concrete at the centerline intersection of Equine Lane and Old Stables Drive located in "The Carter Ranch Phase IIA". Elevation =728.63'feet

CM #5 = Concrete monument with 5/8 inch iron rod with cap stamped "Huitt-Zollars" at the Southeast corner of the intersection of State Highway 289 and County Road 88, located approximately 45' feet South of the centerline of County Road 88 and 112' feet East of the centerline of State Highway 289 Elevation = 681.76' feet

GRAPHIC SCALE

40 0 20 40 80 160

(IN FEET)

1 inch = 40 ft.

RECORD DRAWING

ALL INFORMATION SHOWN ON THESE PLANS WAS FURNISHED BY THE CONTRACTOR. ALL RESPONSIBILITY FOR THE ACCURACY BELONGS TO THE CONTRACTOR.

Duc Tran
USA PROFESSIONAL SERVICES GROUP, INC.

DATE: August 15, 2013

NOTE:
ALL CURVES IN THE STORM SEWER LINE MUST USE B2 RADIAL PIPE

REV	DESCRIPTION	DATE

THE CARTER RANCH - PHASE VA

CITY OF CELINA, COLLIN COUNTY, TEXAS

STORM SEWER PLAN & PROFILES
LATERALS D-1.2 D-1.3 D-1.4 D-2.2 & D-2.3

19 FM LTD.
1221 North Interstate 35, Suite 200
Carrollton, Texas 75006
Phone (469) 892-7200 Fax (469) 892-7201

James Scott Young 8/15/13
STATE OF TEXAS
JAMES SCOTT YOUNG
69031
REGISTERED
PROFESSIONAL ENGINEER

USA PROFESSIONAL SERVICES GROUP, INC.
TEXAS BOARD OF PROFESSIONAL ENGINEERS
REGISTERED ENGINEERING FIRM F-1945
CIVIL ENGINEERS • SURVEYORS
PLANNERS • LANDSCAPE ARCHITECTS
1525 VICEROY DRIVE
DALLAS, TEXAS 75235
(214) 634-3300 FAX (214) 634-3338

DATE: January 2013

SCALE: 1" = 40'H/6'V

SHEET: 12 OF 28

PROJECT NO. 2009016.02

P:\Sdskengn\2009016.02\Dwg\ 2009016_02-xd (4-1)-Reg_Sheet - (2), 1/15/2013 5:56:32 AM, James Gardella

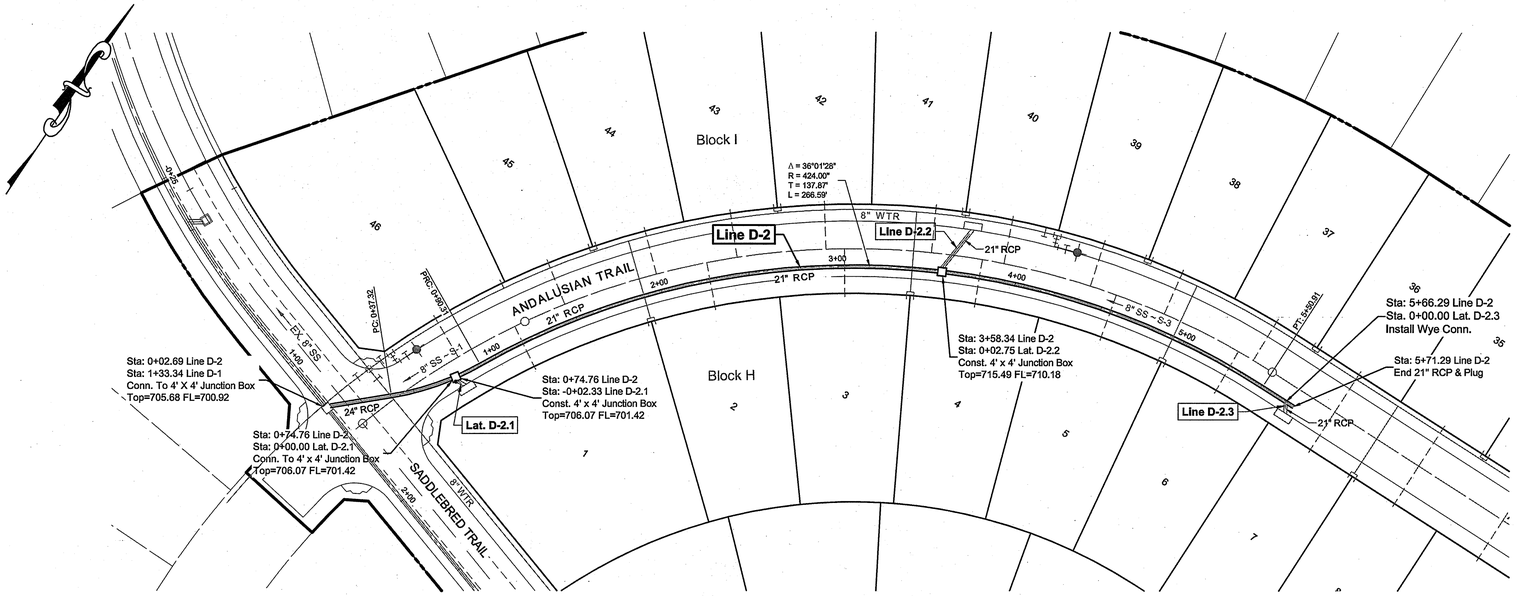

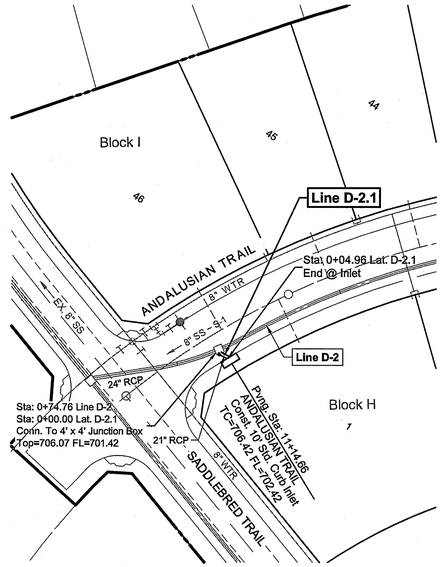

Profile View of D-2

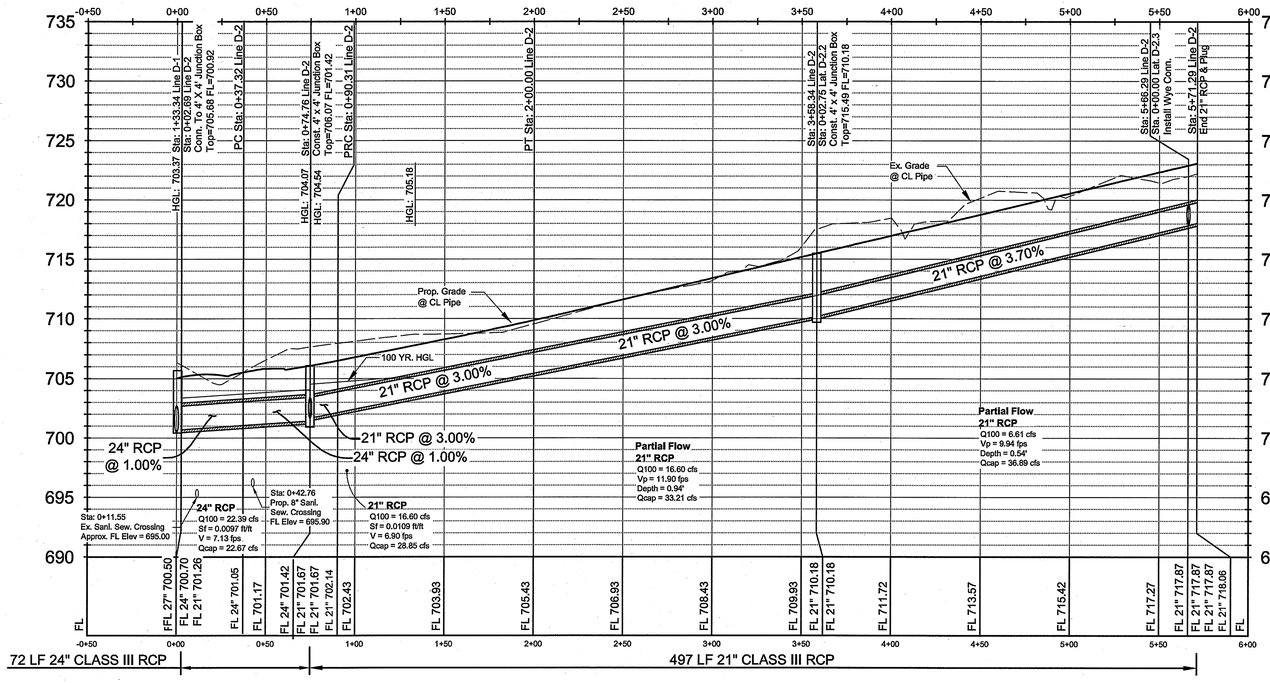

Profile View of D-2.1

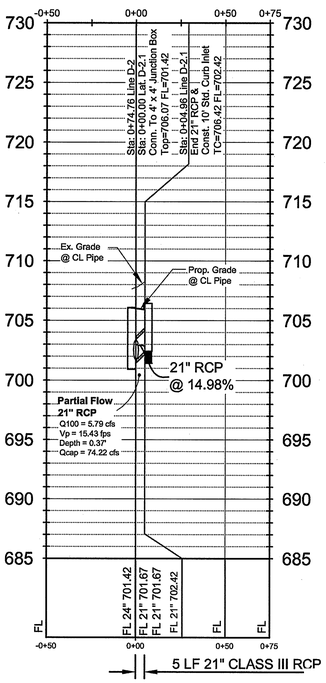

BENCHMARKS

TBM #1= Centerline of existing sanitary manhole at the centerline intersection of Appaloosa Lane and Equine Lane located in "The Carter Ranch Phase IIA". Elevation = 687.57'feet

TBM #2 = "X" Found in concrete at the centerline intersection of Equine Lane and Old Stables Drive located in "The Carter Ranch Phase IIA". Elevation =728.63'feet

CM #5 = Concrete monument with 5/8 inch iron rod with cap stamped "Huitt-Zollars" at the Southeast corner of the intersection of State Highway 289 and County Road 88, located approximately 45' feet South of the centerline of County Road 88 and 112' feet East of the centerline of State Highway 289 Elevation = 681.76' feet

GRAPHIC SCALE

40 0 20 40 80 160

(IN FEET)

1 inch = 40 ft.

NOTE:
ALL CURVES IN THE STORM SEWER LINE MUST USE B2 RADIAL PIPE

RECORD DRAWING

ALL INFORMATION SHOWN ON THESE PLANS WAS FURNISHED BY THE CONTRACTOR. ALL RESPONSIBILITY FOR THE ACCURACY BELONGS TO THE CONTRACTOR.

Duc Tran
USA PROFESSIONAL SERVICES GROUP, INC.
DATE: August 15, 2013

REV	DESCRIPTION	DATE

THE CARTER RANCH - PHASE VA

CITY OF CELINA, COLLIN COUNTY, TEXAS

STORM SEWER PLAN & PROFILE

LINE D-2
LATERAL D-2.1

19 FM LTD.
1221 North Interstate 35, Suite 200
Carrollton, Texas 75006
Phone (469) 892-7200 Fax (469) 892-7201

STATE OF TEXAS
JAMES SCOTT YOUNG
69031
REGISTERED PROFESSIONAL ENGINEER

USA PROFESSIONAL SERVICES GROUP, INC.
TEXAS BOARD OF PROFESSIONAL ENGINEERS
REGISTERED ENGINEERING FIRM F-1845
CIVIL ENGINEERS • SURVEYORS
PLANNERS • LANDSCAPE ARCHITECTS
1525 VICEROY DRIVE
DALLAS, TEXAS 75235
(214) 634-3300 FAX (214) 634-3338

DATE: January 2013
SCALE: 1" = 40'H/6'V
SHEET: 13 OF 28
PROJECT NO. 2009016.02

P:\Sdskengn\2009016.02\Dwg\2009016_03.sd (4-2).dwg, Sheet - (1), 1/15/2013 9:28:26 AM, Jameel Gardella

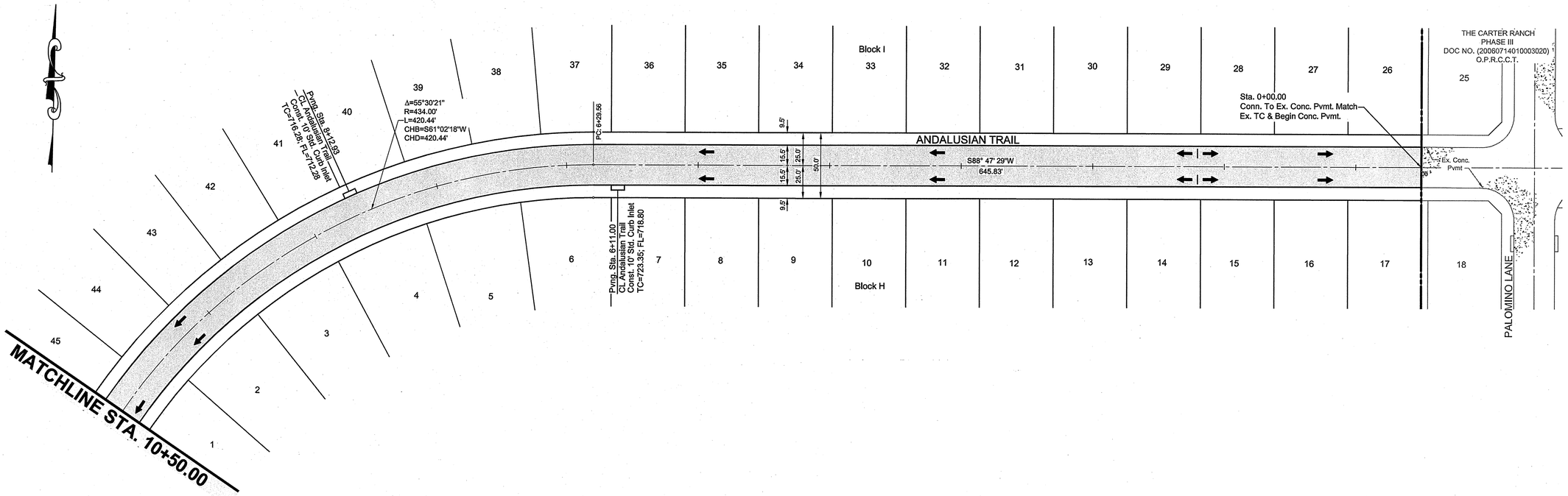

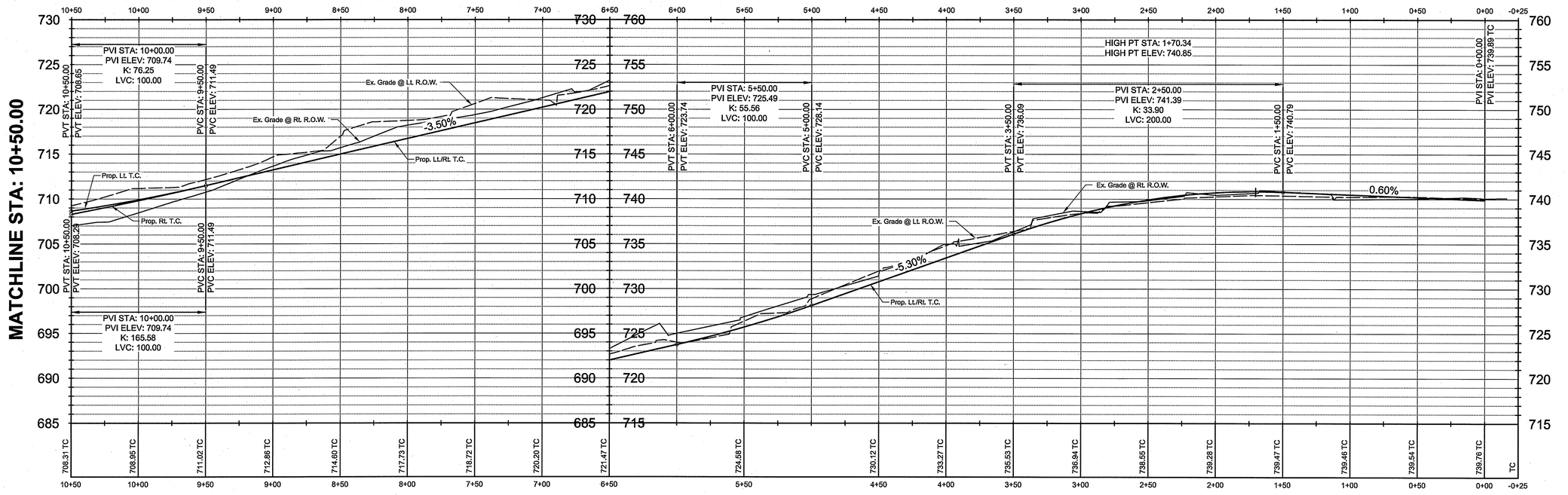

BENCHMARKS

TBM #1= Centerline of existing sanitary manhole at the centerline intersection of Appaloosa Lane and Equine Lane located in "The Carter Ranch Phase IIA". Elevation = 687.57'feet

TBM #2 = "X" Found in concrete at the centerline intersection of Equine Lane and Old Stables Drive located in "The Carter Ranch Phase IIA". Elevation =728.63'feet

CM #5 = Concrete monument with 5/8 inch iron rod with cap stamped "Huitt-Zollars" at the Southeast corner of the intersection of State Highway 289 and County Road 88, located approximately 45' feet South of the centerline of County Road 88 and 112' feet East of the centerline of State Highway 289 Elevation = 681.76' feet

GRAPHIC SCALE

40 0 20 40 80 160

(IN FEET)
1 inch = 40 ft.

LEGEND	
C.R.	Curb Return
P.I.	Point Of Intersection
Sta.	Station
Pvmt.	Pavement
Elev.	Elevation
Rt.	Right
Lt.	Left
T.C.	Top Of Curb

RECORD DRAWING

ALL INFORMATION SHOWN ON THESE PLANS WAS FURNISHED BY THE CONTRACTOR. ALL RESPONSIBILITY FOR THE ACCURACY BELONGS TO THE CONTRACTOR.

Duc Tran
USA PROFESSIONAL SERVICES GROUP, INC.

DATE: August 15, 2013

REV	DESCRIPTION	DATE

THE CARTER RANCH - PHASE VA

CITY OF CELINA, COLLIN COUNTY, TEXAS

PAVING PLAN & PROFILE
ANDALUSION TRAIL STA. 0+00.00 - 10+50.00

19 FM LTD.
1221 North Interstate 35, Suite 200
Carrollton, Texas 75006
Phone (469) 892-7200 Fax (469) 892-7201

STATE OF TEXAS
JAMES SCOTT YOUNG
69031
REGISTERED PROFESSIONAL ENGINEER

USA PROFESSIONAL SERVICES GROUP, INC.
TEXAS BOARD OF PROFESSIONAL ENGINEERS
REGISTERED ENGINEERING FIRM F-1845
CIVIL ENGINEERS • SURVEYORS
PLANNERS • LANDSCAPE ARCHITECTS
1525 VICEROY DRIVE
DALLAS, TEXAS 75235
(214) 634-3300 FAX (214) 634-3338

DATE: January 2013

SCALE: 1" = 40'H/6'V

SHEET: 14 OF 28

PROJECT NO. 2009016.02

P:\Sdskengn\2009016.02\Dwg\2009016_02-pv (andalusian).dwg , Sheet - (1), 1/15/2013 9:59:57 AM, James Gardella

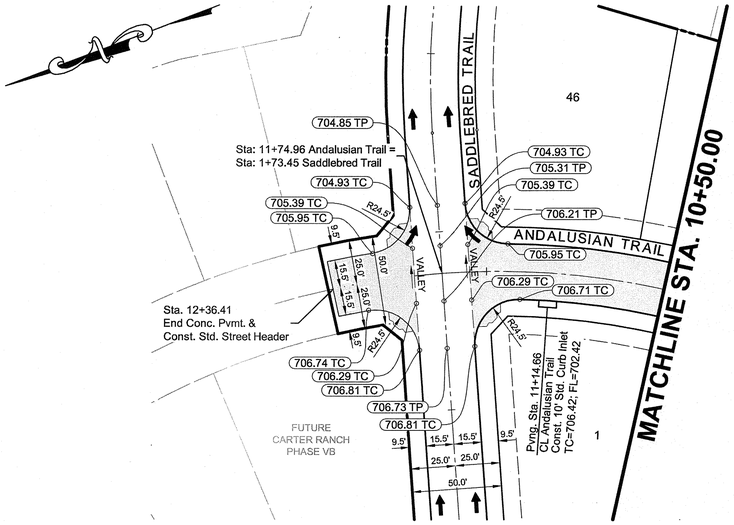

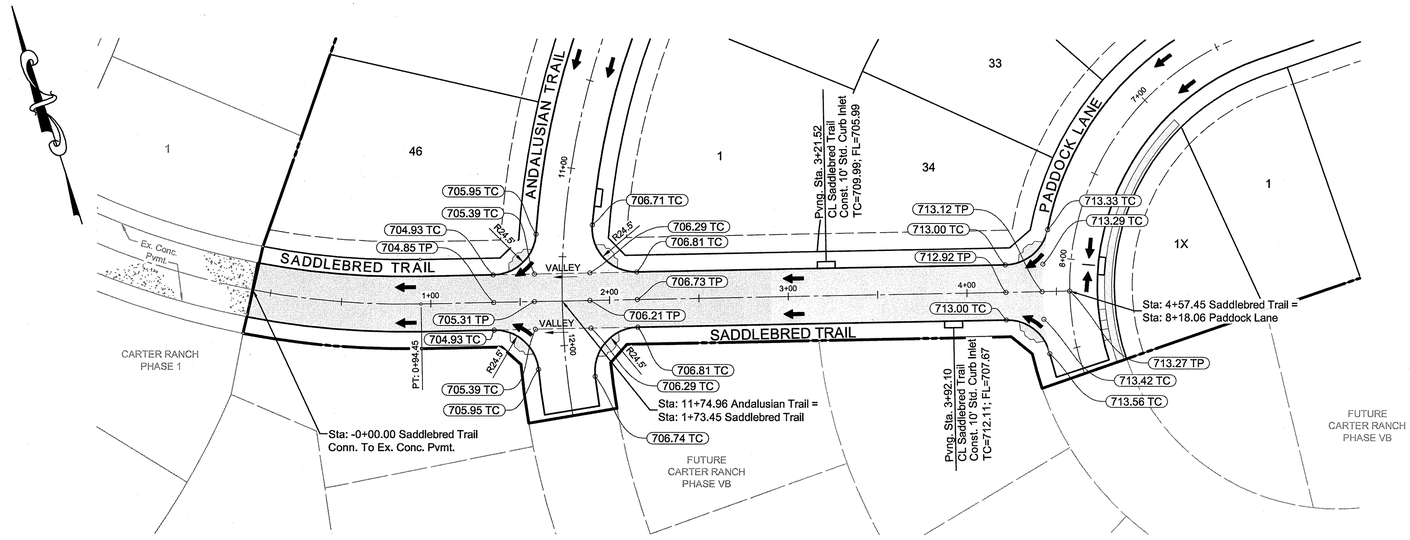

ANDALUSIAN TRAIL

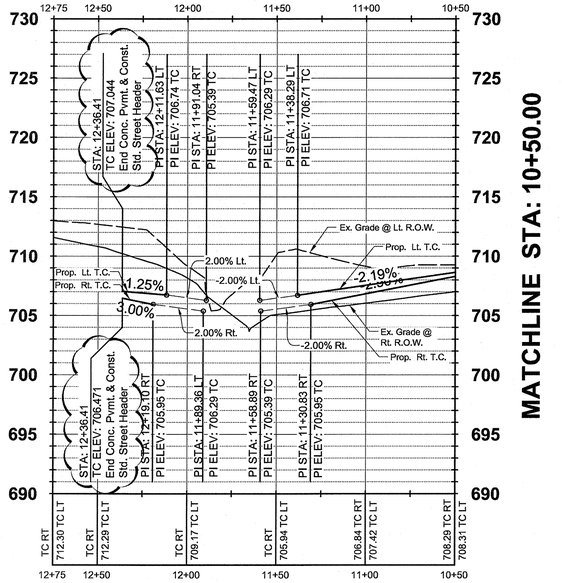

MATCHLINE STA. 10+50.00

SADDLEBRED TRAIL

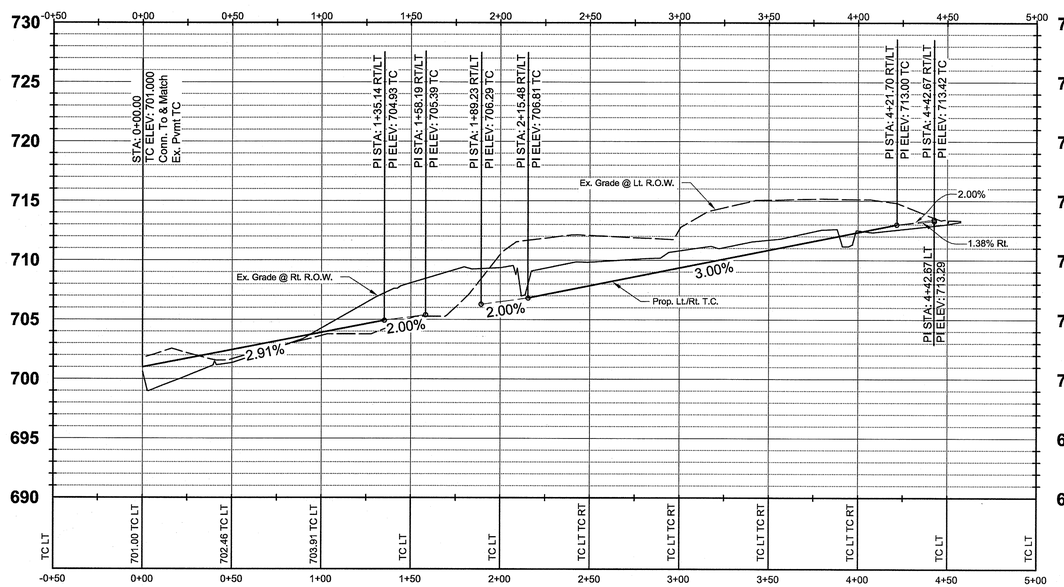

BENCHMARKS

TBM #1= Centerline of existing sanitary manhole at the centerline intersection of Appaloosa Lane and Equine Lane located in "The Carter Ranch Phase IIA". Elevation = 687.57'feet

TBM #2 = "X" Found in concrete at the centerline intersection of Equine Lane and Old Stables Drive located in "The Carter Ranch Phase IIA". Elevation =728.63'feet

CM #5 = Concrete monument with 5/8 inch iron rod with cap stamped "Huitt-Zollars" at the Southeast corner of the intersection of State Highway 289 and County Road 88, located approximately 45' feet South of the centerline of County Road 88 and 112' feet East of the centerline of State Highway 289 Elevation = 681.76' feet

GRAPHIC SCALE

40 0 20 40 80 160

(IN FEET)
1 inch = 40 ft.

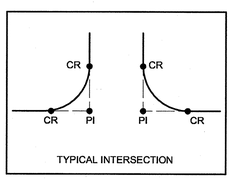

TYPICAL INTERSECTION

LEGEND	
C.R.	Curb Return
P.I.	Point Of Intersection
Sta.	Station
Pvmt.	Pavement
Elev.	Elevation
Rt.	Right
Lt.	Left
T.C.	Top Of Curb
T.P.	Top Of Pavement (Crown)

NOTE:
1. See Profile For Station Of PI & CR Location

RECORD DRAWING

ALL INFORMATION SHOWN ON THESE PLANS WAS FURNISHED BY THE CONTRACTOR. ALL RESPONSIBILITY FOR THE ACCURACY BELONGS TO THE CONTRACTOR.

Duc Tran
USA PROFESSIONAL SERVICES GROUP, INC.
DATE: August 15, 2013

REV	DESCRIPTION	DATE

THE CARTER RANCH - PHASE VA
CITY OF CELINA, COLLIN COUNTY, TEXAS

PAVING PLAN & PROFILE
ANDALUSION TRAIL STA. 10+50.00 - END
SADDLEBRED TRAIL

19 FM LTD.
1221 North Interstate 35, Suite 200
Carrollton, Texas 75006
Phone (469) 892-7200 Fax (469) 892-7201

STATE OF TEXAS
JAMES SCOTT YOUNG
99031
REGISTERED PROFESSIONAL ENGINEER
1/15/13

USA PROFESSIONAL SERVICES GROUP, INC.
TEXAS BOARD OF PROFESSIONAL ENGINEERS REGISTERED ENGINEERING FIRM F-1945
CIVIL ENGINEERS • SURVEYORS
PLANNERS • LANDSCAPE ARCHITECTS
1525 VICEROY DRIVE
DALLAS, TEXAS 75235
(214) 634-3300 FAX (214) 634-3338

DATE: February 2013
SCALE: 1" = 40'H/6'V
SHEET: 15 OF 28
PROJECT NO. 2009016.02

P:\Delivergirl\2009016.02\Dwg\Andalusian 2009016_02.dgn (andalusian) dwg , Sheet - (2), 8/15/2013 3:29:04 PM, Duc Tran

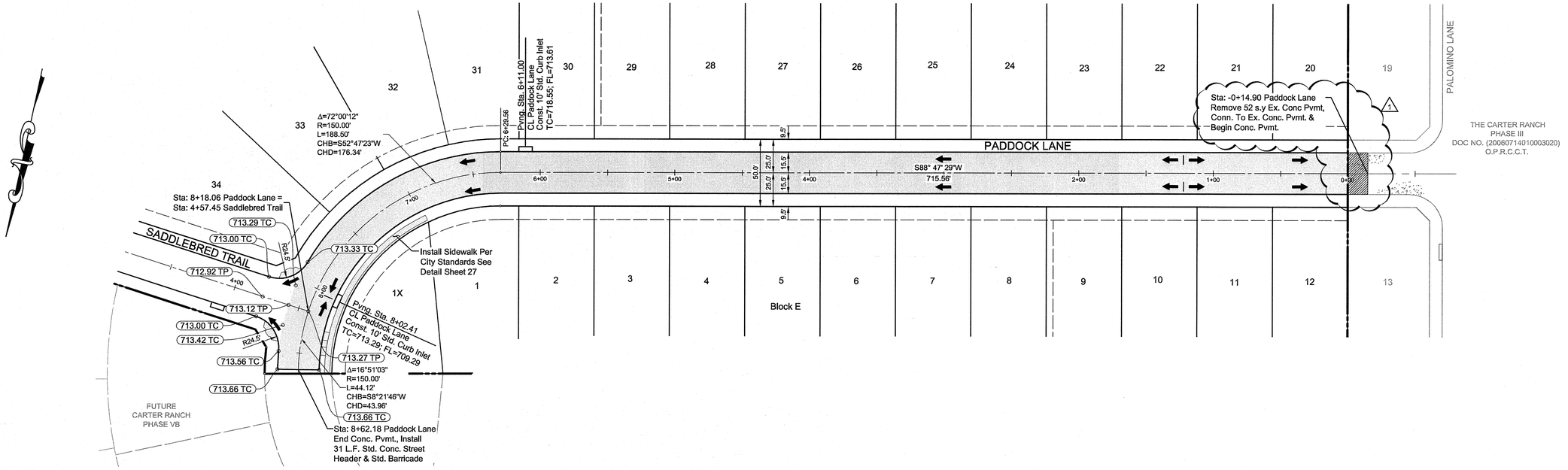

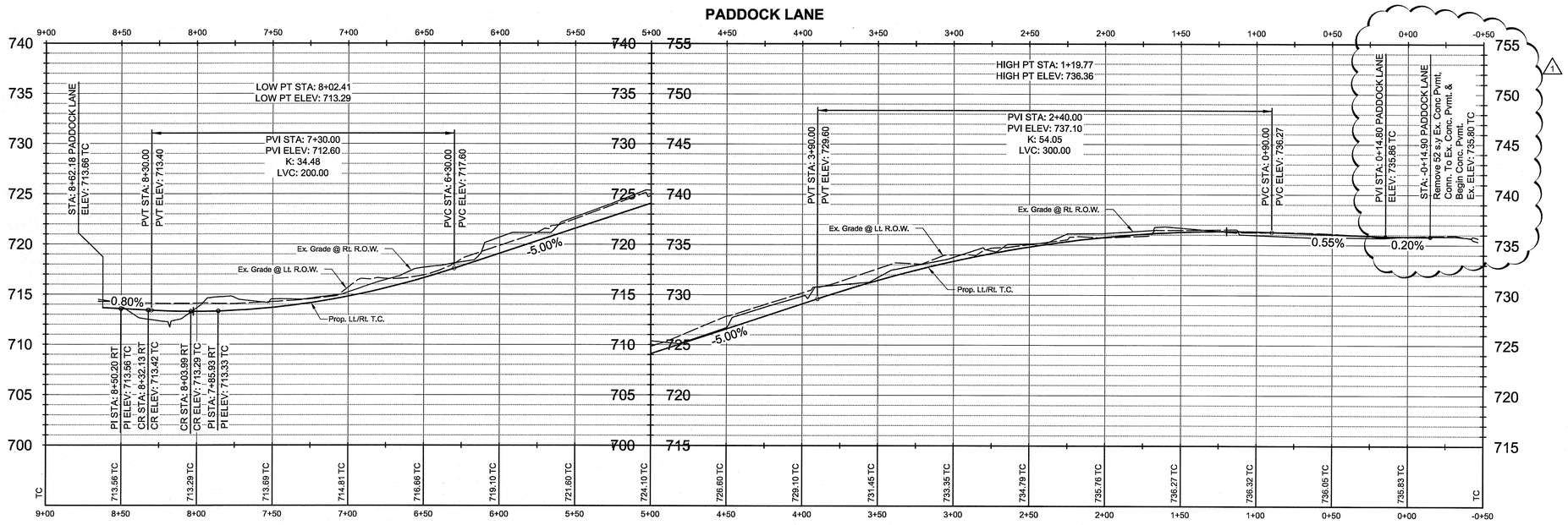

BENCHMARKS

TBM #1= Centerline of existing sanitary manhole at the centerline intersection of Appaloosa Lane and Equine Lane located in "The Carter Ranch Phase IIA". Elevation = 687.57feet

TBM #2 = "X" Found in concrete at the centerline intersection of Equine Lane and Old Stables Drive located in "The Carter Ranch Phase IIA". Elevation =728.63feet

CM #5 = Concrete monument with 5/8 inch iron rod with cap stamped "Huitt-Zollars" at the Southeast corner of the intersection of State Highway 289 and County Road 88, located approximately 45' feet South of the centerline of County Road 88 and 112' feet East of the centerline of State Highway 289 Elevation = 681.76' feet

GRAPHIC SCALE

40 0 20 40 80 160

(IN FEET)
1 inch = 40 ft.

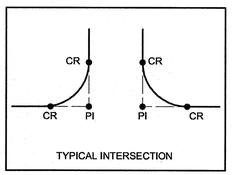

TYPICAL INTERSECTION

LEGEND	
C.R.	Curb Return
P.I.	Point Of Intersection
Sta.	Station
Pvmt.	Pavement
Elev.	Elevation
Rt.	Right
Lt.	Left
T.C.	Top Of Curb
T.P.	Top Of Pavement (Crown)

NOTE:
1. See Profile For Station Of PI & CR Location

RECORD DRAWING

ALL INFORMATION SHOWN ON THESE PLANS WAS FURNISHED BY THE CONTRACTOR. ALL RESPONSIBILITY FOR THE ACCURACY BELONGS TO THE CONTRACTOR.

Duc Tran
USA PROFESSIONAL SERVICES GROUP, INC.
DATE: August 15, 2013

REV	DESCRIPTION	DATE
1	Revised connection to ex. pavement	8-15-2013

THE CARTER RANCH - PHASE VA
CITY OF CELINA, COLLIN COUNTY, TEXAS

PAVING PLAN & PROFILE
PADDOCK LANE

19 FM LTD.
1221 North Interstate 35, Suite 200
Carrollton, Texas 75006
Phone (469) 892-7200 Fax (469) 892-7201

STATE OF TEXAS
JAMES SCOTT YOUNG
69031
REGISTERED PROFESSIONAL ENGINEER
8/15/13

USA PROFESSIONAL SERVICES GROUP, INC.
TEXAS BOARD OF PROFESSIONAL ENGINEERS REGISTERED ENGINEERING FIRM F-1945
CIVIL ENGINEERS • SURVEYORS
PLANNERS • LANDSCAPE ARCHITECTS
1525 VICEROY DRIVE
DALLAS, TEXAS 75235
(214) 634-3300 FAX (214) 634-3338

DATE: February 2013
SCALE: 1" = 40'H/6'V
SHEET: 16 OF 28
PROJECT NO. 2009016.02

P:\Siteengr\2009016.02\Dwg\2009016_02-cv (paddock).dwg, Sheet - (2), 8/19/2013 9:37:42 AM, David Lockear

GRAPHIC SCALE

30 0 15 30 60 120

(IN FEET)
1 inch = 30 ft.

THE CARTER RANCH
PHASE III
Doc. No. 2003-0244960
O.P.R.C.C.T.

MUSTANG TRAIL
ANDALUSIAN TRAIL
SADDLEBRED TRAIL
PADDOCK LANE

EX. CONC. PVMT.

MATCHLINE STA. (See Sheet 18)

LEGEND	
SYMBOL	DESCRIPTION
D	DRIVEWAY
F	FINISH GRADE
TC	TOP OF CURB
TW	TOP OF WALL
BW	BOTTOM OF WALL
FP	FINISH PAD
	FLOW ARROW
471	PROPOSED CONTOURS
471	EXISTING CONTOURS
	STORM SEWER
	RETAINING WALL SHADING
	RETAINING WALL

BENCHMARKS

TBM #1= Centerline of existing sanitary manhole at the centerline intersection of Appaloosa Lane and Equine Lane located in "The Carter Ranch Phase IIA". Elevation = 687.57'feet

TBM #2 = "X" Found in concrete at the centerline intersection of Equine Lane and Old Stables Drive located in "The Carter Ranch Phase IIA". Elevation =728.63'feet

CM #5 = Concrete monument with 5/8 inch iron rod with cap stamped "Huitt-Zollars" at the Southeast corner of the intersection of State Highway 289 and County Road 88, located approximately 45' feet South of the centerline of County Road 88 and 112' feet East of the centerline of State Highway 289 Elevation = 681.76' feet

RECORD DRAWING

ALL INFORMATION SHOWN ON THESE PLANS WAS FURNISHED BY THE CONTRACTOR. ALL RESPONSIBILITY FOR THE ACCURACY BELONGS TO THE CONTRACTOR.

Duc Tran
USA PROFESSIONAL SERVICES GROUP, INC.

DATE: August 15, 2013

P:\Stakeng\2009016\02\dwg\2009016_02cgr.dwg, Layout1, 2/20/2013 6:15:58 PM, James Gandilis

REV	DESCRIPTION	DATE

THE CARTER RANCH - PHASE VA
CITY OF CELINA, COLLIN COUNTY, TEXAS

GRADING PLAN

19 FM LTD.
1221 North Interstate 35, Suite 200
Carrollton, Texas 75006
Phone (469) 892-7200 Fax (469) 892-7201

STATE OF TEXAS
JAMES SCOTT YOUNG
69031
REGISTERED
PROFESSIONAL ENGINEER

USA PROFESSIONAL SERVICES GROUP, INC.
TEXAS BOARD OF PROFESSIONAL ENGINEERS
REGISTERED ENGINEERING FIRM F-1845
CIVIL ENGINEERS • SURVEYORS
PLANNERS • LANDSCAPE ARCHITECTS
1525 VICEROY DRIVE
DALLAS, TEXAS 75235
(214) 634-3300 FAX (214) 634-3338

DATE: January 2013

SCALE: 1" = 30'

SHEET: 17 OF 28

PROJECT NO. 2009016.02

GRAPHIC SCALE

30 0 15 30 60 120

(IN FEET)
1 inch = 30 ft.

LEGEND	
SYMBOL	DESCRIPTION
D	DRIVEWAY
F	FINISH GRADE
TC	TOP OF CURB
TW	TOP OF WALL
BW	BOTTOM OF WALL
FP	FINISH PAD
	FLOW ARROW
471	PROPOSED CONTOURS
471	EXISTING CONTOURS
	STORM SEWER
	RETAINING WALL SHADING
	RETAINING WALL

BENCHMARKS

TBM #1= Centerline of existing sanitary manhole at the centerline intersection of Appaloosa Lane and Equine Lane located in "The Carter Ranch Phase IIA". Elevation = 687.57'feet

TBM #2 = "X" Found in concrete at the centerline intersection of Equine Lane and Old Stables Drive located in "The Carter Ranch Phase IIA". Elevation =728.63'feet

CM #5 = Concrete monument with 5/8 inch iron rod with cap stamped "Hulit-Zollars" at the Southeast corner of the intersection of State Highway 289 and County Road 88, located approximately 45' feet South of the centerline of County Road 88 and 112' feet East of the centerline of State Highway 289 Elevation = 681.76' feet

MATCHLINE STA. (See Sheet 17)

ANDALUSIAN TRAIL

PADDOCK LANE

PALOMINO LANE

EX. CONC. PVMT.

THE CARTER RANCH PHASE III
Doc. No. 20060714010003020
O.P.R.C.C.T.

FUTURE THE CARTER RANCH PHASE VB

RECORD DRAWING

ALL INFORMATION SHOWN ON THESE PLANS WAS FURNISHED BY THE CONTRACTOR. ALL RESPONSIBILITY FOR THE ACCURACY BELONGS TO THE CONTRACTOR.

Duc Tran
USA PROFESSIONAL SERVICES GROUP, INC.
DATE: August 15, 2013

REV	DESCRIPTION	DATE

THE CARTER RANCH - PHASE VA
CITY OF CELINA, COLLIN COUNTY, TEXAS

GRADING PLAN

19 FM LTD.
1221 North Interstate 35, Suite 200
Carrollton, Texas 75006
Phone (469) 892-7200 Fax (469) 892-7201

STATE OF TEXAS
JAMES SCOTT YOUNG
69031
LICENSED PROFESSIONAL ENGINEER

USA PROFESSIONAL SERVICES GROUP, INC.
TEXAS BOARD OF PROFESSIONAL ENGINEERS
REGISTERED ENGINEERING FIRM F-1945
CIVIL ENGINEERS • SURVEYORS
PLANNERS • LANDSCAPE ARCHITECTS
1525 VICEROY DRIVE
DALLAS, TEXAS 75235
(214) 634-3300 FAX (214) 634-3338

DATE: January 2013
SCALE: 1" = 30'H
SHEET: 18 OF 28
PROJECT NO. 2009016.02

P:\Stakeng\2009016.02\Dwg\2009016_02-gr.dwg, Layout2, 2/20/2013 8:14:38 PM, James Gandilla

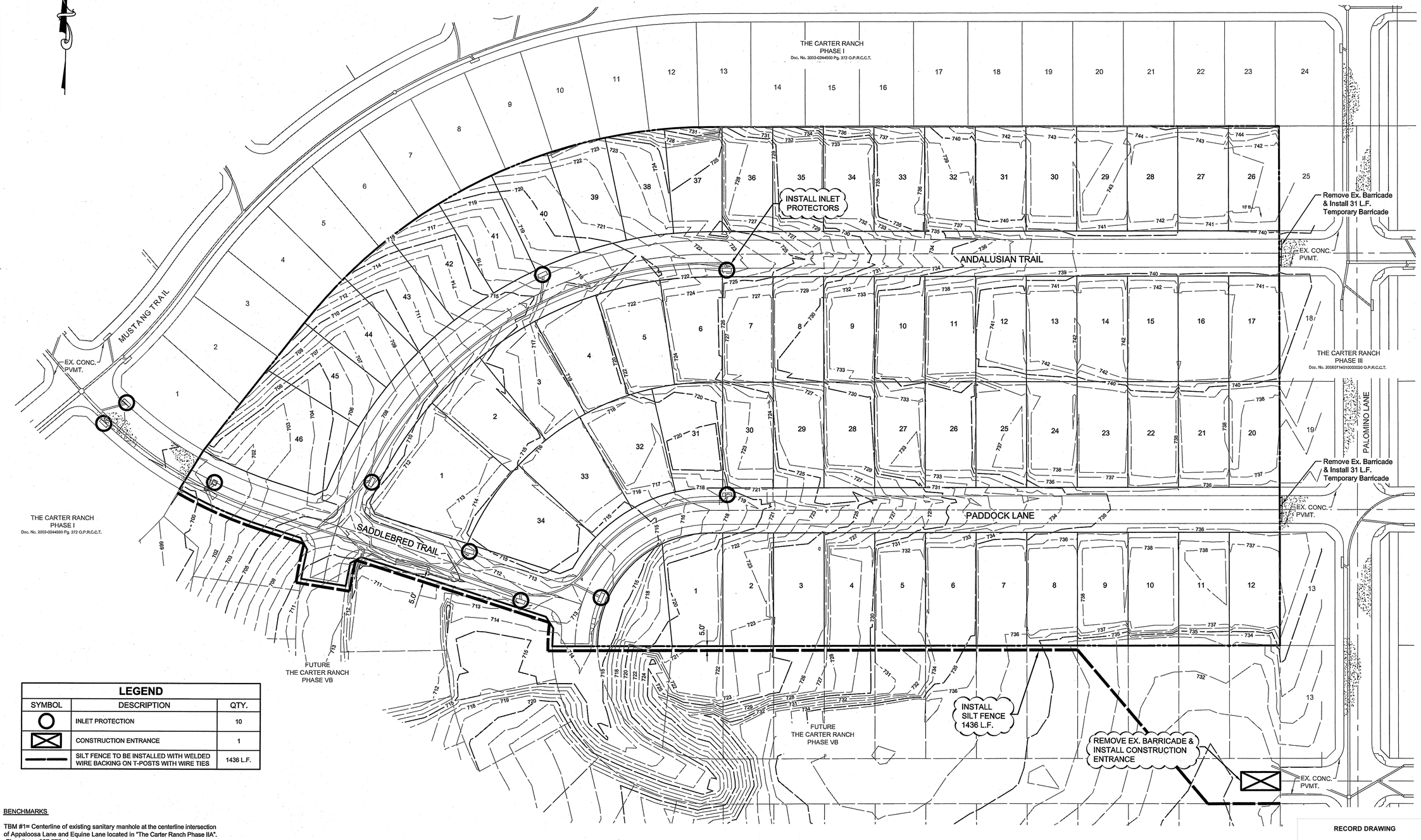

LEGEND

SYMBOL	DESCRIPTION	QTY.
○	INLET PROTECTION	10
⊠	CONSTRUCTION ENTRANCE	1
———	SILT FENCE TO BE INSTALLED WITH WELDED WIRE BACKING ON T-POSTS WITH WIRE TIES	1436 L.F.

BENCHMARKS

TBM #1= Centerline of existing sanitary manhole at the centerline intersection of Appaloosa Lane and Equine Lane located in "The Carter Ranch Phase IIA". Elevation = 687.57'feet

TBM #2 = "X" Found in concrete at the centerline intersection of Equine Lane and Old Stables Drive located in "The Carter Ranch Phase IIA". Elevation =728.63'feet

CM #5 = Concrete monument with 5/8 inch iron rod with cap stamped "Huitt-Zollars" at the Southeast corner of the intersection of State Highway 289 and County Road 88, located approximately 45' feet South of the centerline of County Road 88 and 112' feet East of the centerline of State Highway 289 Elevation = 681.76' feet

GRAPHIC SCALE

50 0 25 50 100 200

(IN FEET)
1 inch = 50 ft.

RECORD DRAWING

ALL INFORMATION SHOWN ON THESE PLANS WAS FURNISHED BY THE CONTRACTOR. ALL RESPONSIBILITY FOR THE ACCURACY BELONGS TO THE CONTRACTOR.

Duc Tran
USA PROFESSIONAL SERVICES GROUP, INC.

DATE: August 15, 2013

REV	DESCRIPTION	DATE

THE CARTER RANCH - PHASE VA
CITY OF CELINA, COLLIN COUNTY, TEXAS
EROSION CONTROL PLAN

19 FM LTD.
1221 North Interstate 35, Suite 200
Carrollton, Texas 75006
Phone (469) 892-7200 Fax (469) 892-7201

1/15/13

STATE OF TEXAS
JAMES SCOTT YOUNG
69031
REGISTERED
PROFESSIONAL ENGINEER

USA PROFESSIONAL SERVICES GROUP, INC.
TEXAS BOARD OF PROFESSIONAL ENGINEERS
REGISTERED ENGINEERING FIRM F-1845
CIVIL ENGINEERS • SURVEYORS
PLANNERS • LANDSCAPE ARCHITECTS
1525 VICEROY DRIVE
DALLAS, TEXAS 75235
(214) 634-3300 FAX (214) 634-3338

DATE: January 2013
SCALE: 1" = 50'H
SHEET: 19 OF 28
PROJECT NO. 2009016.02

P:\Sdskengn\2009016.02\Dwg\ 2009016_02-ep.dwg, Layout1, 1/15/2013 10:08:29 AM, James Gardella

SITE DESCRIPTION

This Storm Water Pollution Prevention Plan (SWPPP) has been prepared for site development construction activities as shown on the following pages. The intent of this plan is to control storm water discharges and certain non-storm water discharges associated with site development construction. It is anticipated the following non-storm water discharges may be associated with the construction activities. Each of the following discharges are authorized by the Construction General Permit and are specified herein and made a part of this SWPPP.

1. Waters used to wash vehicles or control dust.
2. Waterline flushings.
3. Fire Hydrant flushings.
4. Irrigation drainage.
5. Routine pavement washdowns where spills or leaks of toxic or hazardous materials have not occurred (unless all spilled material has been removed) and where detergents are not used.
6. Routine external building washdowns which do not use detergents.
7. Air conditioning condensates.
8. Foundation or footing drains where flows are not contaminated with process materials such as solvents.

If the Contractor anticipates or experiences any other non-storm water discharges, he shall contact the Engineer of Record to discuss the need for control measures and possible revisions to this SWPPP.

The runoff coefficient of the site after construction is complete is estimated as _____ per the CITY OF CELINA drainage design criteria. The soils at this site are generally _____, per the soils report prepared by _____, dated _____. Storm water from this site discharges into _____. There are no wetland areas in the disturbed areas covered by this plan according to the U.S. Army Corps of Engineers, Fort Worth office The total site area is _____acres. It is anticipated that _____ acres will be disturbed during the construction activities.

EROSION CONTROL GENERAL NOTES

1. Disturbed areas where construction has permanently or temporarily ceased must be stabilized within 14 days of the last disturbance. Area which will be redisturbed within 21 days need not be stabilized.
2. Erosion control measures will be actively maintained until final stabilization of the disturbed area. If erosion control measures are removed for construction or access purposes, Contractor shall replace all items at the end of each work day.
3. After installation of pavement, final lot benching and general cleanup, all disturbed areas shall be hydromulched or cultipack seeded. See seeding specifications this sheet.
4. Erosion control measures require maintenance, cleaning and replacement as required. Erosion control measures will be inspected at least once every seven days and within 24 hours of a rainfall one-half inch or greater by an Agent designated by the Operator and a written report shall be maintained.
5. Excavated trenches and utility spoils shall be backfilled or stockpiled at the end of each day.
6. Stockpiled materials shall be surrounded by silt barrier fence or hay bales per the attached details. Alternate: small stockpiled areas may be covered by a water repellent tarp or plastic as approved by the Operator.
7. Soils in parkways to be chain harrowed or chain dragged prior to seeding. After seeding, parkways to be maintained until a stand of grass has been accomplished and approved by the City.

INSTALLATION SEQUENCE

PHASE 1 **(Initial Grading)** Initial installation of silt fence shall be installed prior to clearing the site for establishing rough grades. Installation of silt fence and stone overflow shall be preserved by the excavation contractor. If during the course of clearing and excavation, the excavation contractor destroys or moves these facilites, then it shall be the responsibility of the excavation contractor to replace the facilities to the state in which he found them when he mobilized.

PHASE 2 **(Utility Install)** If required, installation of silt fence or stone overflow, as shown, shall be installed prior to the construction of any drainage facilities and after inlet bottoms are poured. It shall be the utility contractor's responsibility to preserve and/or replace any facilities previously installed during PHASE 1 if destroyed.

PHASE 3 **(Paving)** Curlex shall be installed after the paving contractor has backfilled all street curbs. The paving contractor shall be responsible for preserving and/or replacing any previously installed facilities which are destroyed as a result of constructing any and all paving facilities.

PHASE 4 **(Final Grading)** All disturbed areas shall be seeded by others after the excavation contractor has completed the final lot benching of each lot within this development.

* All proposed stormwater pollution prevention devices shall be installed by a qualified contractor and shall be paid for per a unit price contract.

OTHER NOTES

1. Solid non-hazardous construction waste shall be disposed of in trash dumpsters or approved equal, in a location approved by the operator. Potentially soluble or leachable solid waste shall be stored off the ground and in covered leak-proof containers. Solid waste shall be properly disposed of off-site on a regular basis.
2. Hazardous waste shall be segregated from non-hazardous construction site debris. Liquid or semi-liquid hazardous waste shall be stored in appropriate containers (closed drums or similar) and shall be kept under cover. Granular, soluble or leachable hazardous waste materials shall be stored off the ground and in covered leak-proof containers. Hazardous waste storage area locations shall be properly approved of by the Operator. Hazardous waste shall be properly disposed of off-site on a regular basis by a reputable, licensed hazardous waste hauler.

   Note: It is not the intent of this SWPPP to supersede or replace normal site assessment and remediation procedures concerning hazardous materials. Significant spills and/or contamination warrant immediate response by trained professionals. Suspected job site contamination should be immediately reported to regulatory authorities and protective actions taken.
3. Fresh concrete waste and concrete equipment washdowns shall be contained in an area approved by the operator. Contractor shall ensure that adequate vegetative buffer is present around concrete disposal areas.
4. All waste materials shall be stored away from drainage ditches, swales and drainage structures. Where appropriate, containment berms shall be placed around waste storage areas.
5. Contractor shall take appropriate measures to control dust generated during construction activities.
6. Contractor shall construct appropriate entryways to prohibit the tracking of dirt and debris off-site.
7. A centrally located port-a-pot shall be placed and maintained on the project site at all times during construction activities.
8. Equipment maintenance, repair and washdowns shall be performed off-site or in locations approved by Operator.
9. A copy of this SWPPP shall be kept on-site for the entire construction period. The NOI associated with this SWPPP shall be properly displayed on-site for the entire construction period.
10. A Notice of Termination (N.O.T.) shall be filed for this project upon City acceptance of the project and after final stabilization has been achieved and the responsibility for continued Storm Water Management/Erosion Control shall become that of the builder, city, or other appropriate entity responsible for any applicable construction activity in the future.
11. Complete inspection records pertaining to this NOI and SWPPP must be maintained by the Operator for a period of three (3) years following final stabilization.

BMP MAINTENANCE SCHEDULE		
BMP	MAINTENANCE FREQUENCY	BY:
TEMPORARY STONE CONSTRUCTION ENTRANCE/EXIT	WEEKLY AND AFTER RAIN STORM EVENTS	OWNER
ROCK CHECK DAM	WEEKLY AND AFTER RAIN STORM EVENTS	OWNER
SILT FENCE	WEEKLY AND AFTER RAIN STORM EVENTS	OWNER
INLET PROTECTION	WEEKLY AND AFTER RAIN STORM EVENTS	OWNER

SEEDING SPECIFICATIONS

CULTIPACK SEEDING SPECIFICATIONS

Winter Rye Seed (Fall & Winter)	65 lb/acre	(1.5 lbs/1000 sq. ft.)
Common Bermuda Seed (Spring & Summer)	65 lb/acre	(1.5 lbs/1000 sq. ft.)
17/17/17 Fertilizer	380 lb/acre	(9 lbs/1000 sq. ft.)

HYDROMULCH SEEDING SPECIFICATIONS

Winter Rye Seed (Fall & Winter)	65 lb/acre	(1.5 lbs/1000 sq. ft.)
Common Bermuda Seed (Spring & Summer)	65 lb/acre	(1.5 lbs/1000 sq. ft.)
17/17/17 Fertilizer	380 lb/acre	(9 lbs/1000 sq. ft.)
Wood Cellulose Mulch Fiber	2000 lb/acre	(50 lbs/1000 sq. ft.)
Biodegradable Tacifier	65 lb/acre	(1.5 lbs/1000 sq. ft.)

Note: Soil to be seeded shall be chain harrowed or chain dragged prior to seeding. After seeding, these areas shall be maintained until grass is established and approved by Operator.

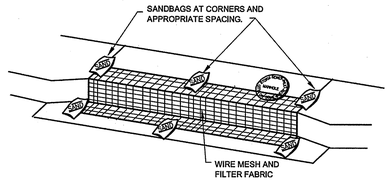

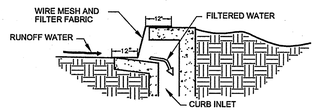

SEDIMENT BARRIER AT INLETS OR APPROVED EQUALSTONE OVERFLOW STRUCTURE

N.T.S.

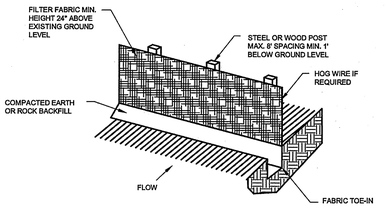

ISOMETRIC VIEW

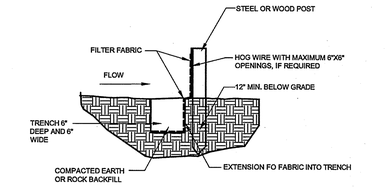

SECTION VIEW

SILT FENCE

N.T.S.

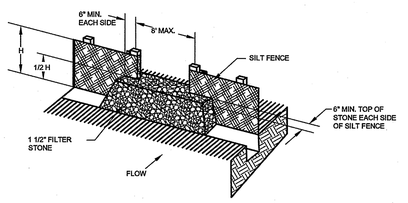

STONE OVERFLOW STRUCTURE

N.T.S.

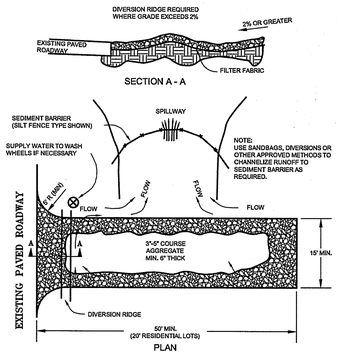

TEMPORARY STONE CONSTRUCTION ENTRANCE / EXIT

N.T.S.

RECORD DRAWING

ALL INFORMATION SHOWN ON THESE PLANS WAS FURNISHED BY THE CONTRACTOR. ALL RESPONSIBILITY FOR THE ACCURACY BELONGS TO THE CONTRACTOR.

Duc Tran
USA PROFESSIONAL SERVICES GROUP, INC.

DATE: August 15, 2013

REV	DESCRIPTION	DATE

THE CARTER RANCH - PHASE VA
CITY OF CELINA, COLLIN COUNTY, TEXAS

EROSION CONTROL DETAILS

19 PM LTD.
1221 North Interstate 35, Suite 200
Carrollton, Texas 75006
Phone (469) 892-7200 Fax (469) 892-7201

1/15/13

STATE OF TEXAS
JAMES SCOTT YOUNG
69031
REGISTERED PROFESSIONAL ENGINEER

USA PROFESSIONAL SERVICES GROUP, INC.
TEXAS BOARD OF PROFESSIONAL ENGINEERS
REGISTERED ENGINEERING FIRM F-1845
CIVIL ENGINEERS • SURVEYORS
PLANNERS • LANDSCAPE ARCHITECTS
1525 VICEROY DRIVE
DALLAS, TEXAS 75235
(214) 634-3300 FAX (214) 634-3338

DATE: January 2013

SCALE: NOT TO SCALE

SHEET: 20 OF 28

PROJECT NO. 2009016.02

P:\Siskemp\m\2009016.02\Dwg\ 2009016_02-sd.dwg, 1/15/2013 10:10:02 AM, James Gandilla

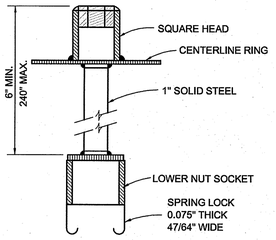

SPRING LOCK VALVE EXTENSION

NO SCALE

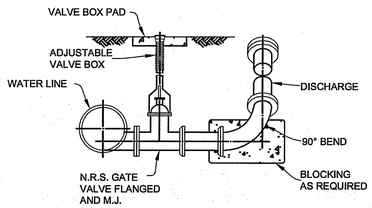

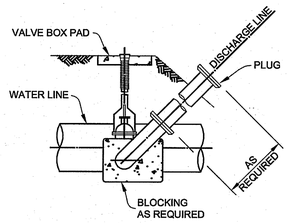

BLOW OFF VALVE

NO SCALE

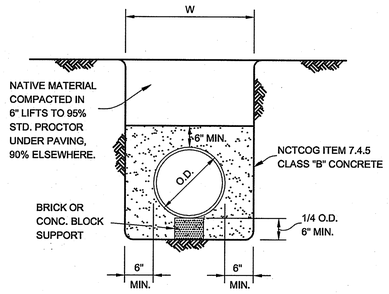

CLASS G EMBEDMENT

CONCRETE ENCASEMENT

NO SCALE

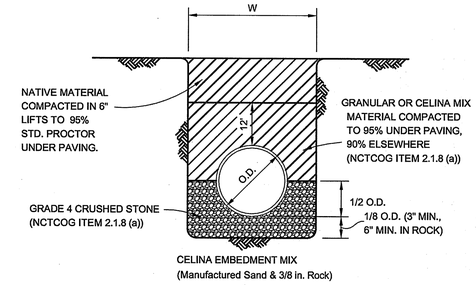

CLASS B+ EMBEDMENT

STD PVC WATER

NO SCALE

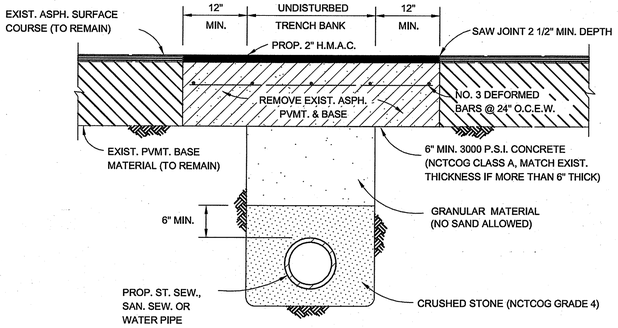

ASPHALT STREET REPAIR

NO SCALE

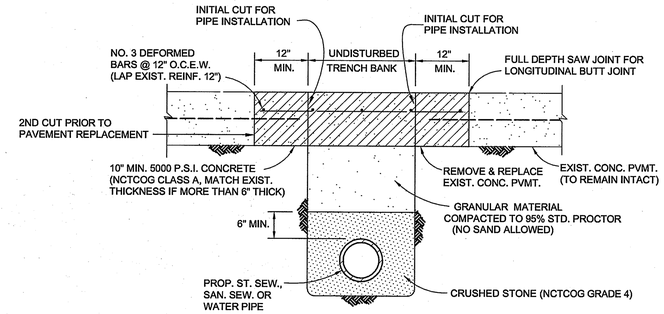

CONCRETE STREET REPAIR

NO SCALE

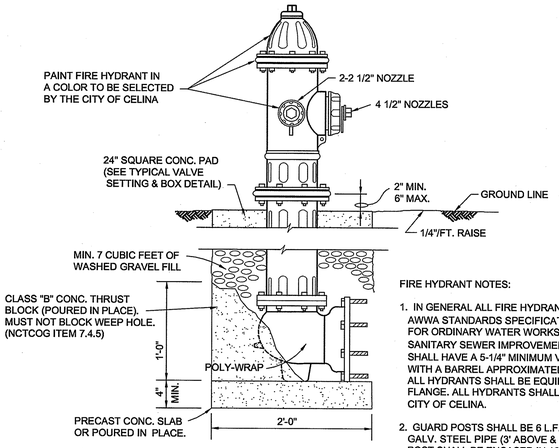

FIRE HYDRANT NOTES:

1. IN GENERAL ALL FIRE HYDRANTS SHALL CONFORM TO AWWA STANDARDS SPECIFICATIONS FOR FIRE HYDRANTS FOR ORDINARY WATER WORKS SERVICE FOR WATER AND SANITARY SEWER IMPROVEMENTS. FIRE HYDRANTS SHALL HAVE A 5-1/4" MINIMUM VALVE OPENING AND WITH A BARREL APPROXIMATELY 7" INSIDE DIAMETER. ALL HYDRANTS SHALL BE EQUIPPED WITH A BREAKAWAY FLANGE. ALL HYDRANTS SHALL BE APPROVED BY THE CITY OF CELINA.
2. GUARD POSTS SHALL BE 6 L.F. OF 6" DIA. HOT DIPPED GALV. STEEL PIPE (3' ABOVE & BELOW GROUND LEVEL). POST SHALL BE ENCASED IN 16" DIA. CONC. PIER TO A DEPTH OF 12" BELOW POST BOTTOM. REINFORCE CONC. PIER WITH 2 NO. 6 BARS (12" LONG) THRU POST INTO PIER.

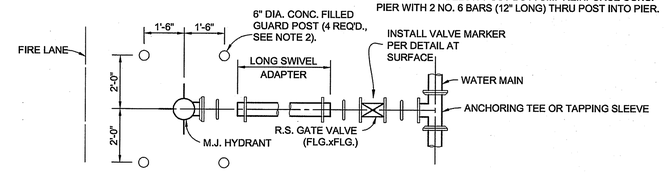

TYPICAL FIRE HYDRANT INSTALLATION

NO SCALE

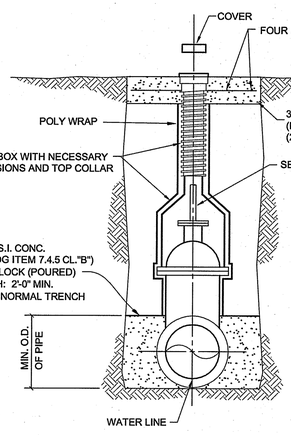

WATER VALVE NOTES:

1. 4" TO 12" GATE VALVE SHALL BE RESILIENT SEATED WEDGE GATE VALVES ACCORDANCE WITH AWWA STANDARD C-509.
2. A PERMANENTLY ATTACHED VALVE EXTENSION STEM SHALL BE REQUIRED FOR ANY VALVE WHOSE OPERATING NUT IS LOCATED IN EXCESS OF 4 FEET BELOW THE TOP OF VALVE BOX. THIS EXTENSION SHALL BE OF SUFFICIENT LENGTH TO INSURE THAT ITS TOP IS WITHIN 4" OF THE VALVE BOX COVER.
3. VALVE SHALL BE WRAPPED IN POLY WRAP.

VALVE SETTING & BOX

NO SCALE

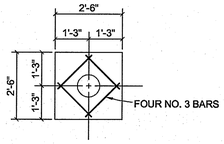

VALVE BOX PAD PLAN

NO SCALE

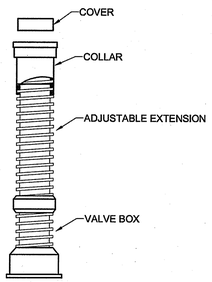

VALVE BOX WITH EXTENSION

NO SCALE

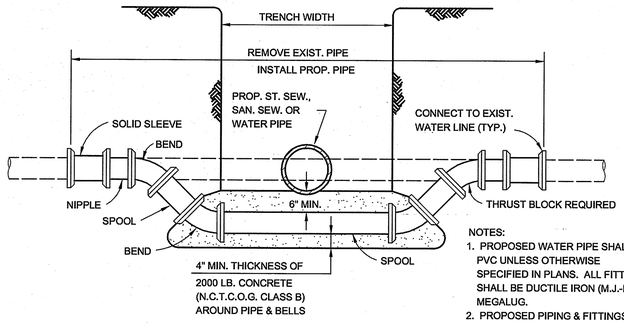

NOTES:

1. PROPOSED WATER PIPE SHALL BE PVC UNLESS OTHERWISE SPECIFIED IN PLANS. ALL FITTINGS SHALL BE DUCTILE IRON (M.J.-P.E.) MEGALUG.
2. PROPOSED PIPING & FITTINGS ARE SYMMETRIC ABOUT CENTER OF PROP. SAN. SEW. OR ST. SEW. PIPE AND SHALL RETAIN TEST PRESSURES.
3. ALL THRUST BLOCKING SHALL BE SUBSIDIARY TO UNIT PRICE.
4. CROSSING OF SANITARY SEWER SHALL BE IN ACCORDANCE WITH T.N.R.C.C. REQUIREMENTS. (CHAPTER 317.13 APPENDIX E)

WATER MAIN LOWERING

NO SCALE

RECORD DRAWING

ALL INFORMATION SHOWN ON THESE PLANS WAS FURNISHED BY THE CONTRACTOR. ALL RESPONSIBILITY FOR THE ACCURACY BELONGS TO THE CONTRACTOR.

Duc Tran
USA PROFESSIONAL SERVICES GROUP, INC.

DATE: August 15, 2013

THE CARTER RANCH - PHASE VA

CITY OF CELINA, COLLIN COUNTY, TEXAS

WATER DETAILS

REV	DESCRIPTION	DATE

19 FM LTD.
1221 North Interstate 35, Suite 200
Carrollton, Texas 75006
Phone (469) 892-7200 Fax (469) 892-7201

1/15/13

STATE OF TEXAS
JAMES SCOTT YOUNG
69031
REGISTERED
PROFESSIONAL ENGINEER

CITY OF CELINA, TEXAS

WATER DISTRIBUTION SYSTEM

STANDARD DETAILS

USA PROFESSIONAL SERVICES GROUP, INC.
TEXAS BOARD OF PROFESSIONAL ENGINEERS
REGISTERED ENGINEERING FIRM F-1845
CIVIL ENGINEERS • SURVEYORS
PLANNERS • LANDSCAPE ARCHITECTS
1525 VICEROY DRIVE
DALLAS, TEXAS 75235
(214) 634-3300 FAX (214) 634-3338

DATE: January 2013

SCALE: NOT TO SCALE

SHEET: 21 OF 28

PROJECT NO. 2009016.02

P:\Sdskengin\2009016.02\Dwg\ 2009016_02-wd.dwg, 11/12/2009 10:46:18 AM, James Gandalla

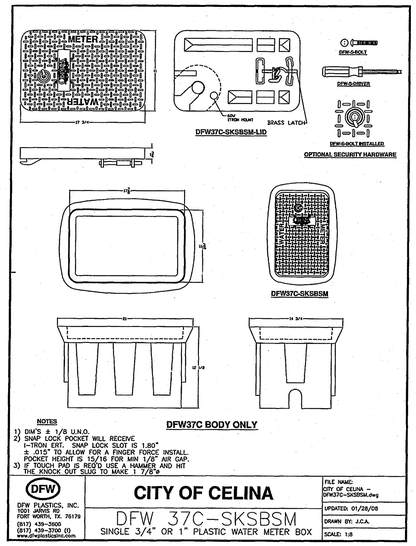

NOTES
1) DIM'S ± 1/8 U.N.O.
2) SNAP LOCK POCKET WILL RECEIVE 1-TRON ERT. SNAP LOCK SLOT IS 1.80" ± .015" TO ALLOW FOR A FINGER FORCE INSTALL. POCKET HEIGHT IS 15/16 FOR MIN 1/8" AIR GAP.
3) IF TOUCH PAD IS REQ'D USE A HAMMER AND HIT THE KNOCK OUT SLUG TO MAKE 1 7/8"ø

DFW PLASTICS, INC.
1501 JARVIS RD
FORT WORTH, TX. 76179
(817) 439-3500
(817) 439-3700 (f)
www.dfwplastics.com

CITY OF CELINA

DFW 37C-SKSBSM
SINGLE 3/4" OR 1" PLASTIC WATER METER BOX

FILE NAME: CITY OF CELINA – DFW37C-SKSBSM.dwg
UPDATED: 01/28/08
DRAWN BY: J.C.A.
SCALE: 1:8

LOCATION OF SAMPLE STATION TO BE DETERMINED BY PUBLIC WORKS DEPARTMENT

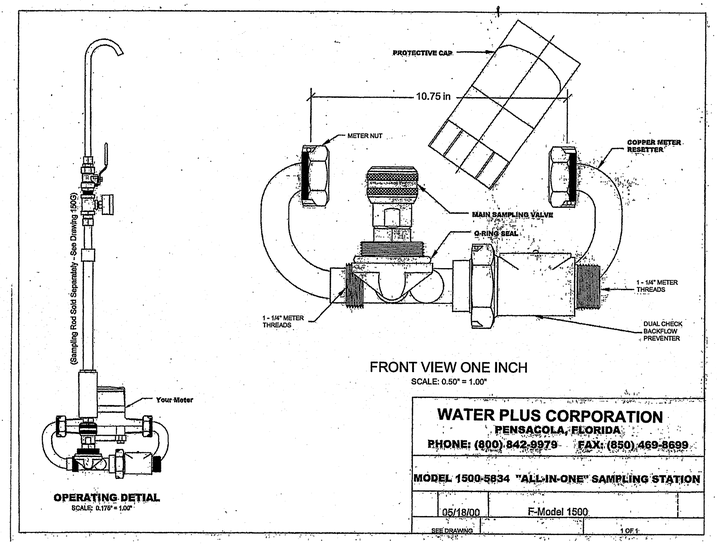

FRONT VIEW ONE INCH
SCALE: 0.50" = 1.00"

WATER PLUS CORPORATION
PENSACOLA, FLORIDA
PHONE: (800) 842-9979 FAX: (850) 469-8699

MODEL 1500-5834 "ALL-IN-ONE" SAMPLING STATION

05/18/00	F-Model 1500
SEE DRAWING	1 OF 1

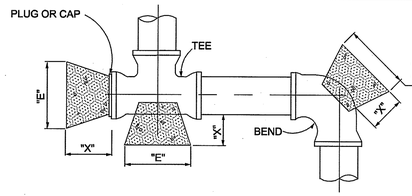

NOTE: ALL CALCULATIONS ARE BASED ON A WATER LINE PRESSURE OF 150 PSI AND AN ALLOWABLE SOIL BEARING VALUE OF 2,500 POUNDS PER SQUARE FOOT.

THESE ARE MINIMUM REQUIREMENTS. INCREASE AREA FOR CONDITIONS OTHER THAN THESE VALUES.

HORIZONTAL BLOCKING TABLE

PIPE SIZE	"X" DIM. IN. FT.	11-1/4 DEGREES		22-1/2 DEGREES		45 DEGREES		90 DEGREES		TEE & PLUG	
		"A"	MIN. AREA	"B"	MIN. AREA	"C"	MIN. AREA	"D"	MIN. AREA	"E"	MIN. AREA
4"	1.5	1.00	1.00	1.00	1.00	1.00	1.00	1.00	1.06	1.00	1.00
6"	1.5	1.00	1.00	1.00	1.00	1.14	1.30	1.55	2.40	1.30	1.70
8"	1.5	1.00	1.00	1.08	1.18	1.52	2.31	2.07	4.27	1.74	3.02
10"	1.5	1.00	1.00	1.35	1.84	1.90	3.61	2.58	6.66	2.17	4.71
12"	1.5	1.00	1.33	1.63	2.65	1.86	5.19	3.10	9.60	2.61	6.79
14"	1.5	1.03	1.81	1.90	3.60	2.66	7.07	3.61	13.06	3.04	9.24
16"	2.0	1.18	2.36	2.17	4.71	3.04	9.23	4.13	17.06	3.47	12.06
18"	2.0	1.33	2.99	2.44	5.96	3.42	11.69	4.65	21.59	3.91	15.27
20"	2.0	1.48	3.70	2.71	7.35	3.80	14.43	5.16	26.66	4.34	18.85
21"	2.0	1.55	4.07	2.85	8.11	3.99	15.91	5.42	29.39	4.56	20.78
24"	2.0	1.77	5.32	3.25	10.59	4.56	20.77	6.20	38.39	5.21	27.14
27"	2.5	1.99	6.73	3.66	13.40	5.13	26.29	6.97	48.58	5.86	34.35
30"	2.5	2.22	8.31	4.07	16.55	5.70	32.46	7.74	59.98	6.51	42.41
33"	2.5	2.44	10.06	4.47	20.02	6.27	39.28	8.52	72.57	7.16	51.31
36"	2.5	2.66	11.97	4.88	23.83	6.84	46.74	9.29	86.37	7.81	61.07
39"	3.0	2.88	14.05	5.29	27.97	7.41	54.86	10.07	101.36	8.47	71.68
42"	3.0	3.10	16.30	5.69	32.43	7.98	63.62	10.85	117.56	9.12	83.13

NOTE: CLASS "B" CONCRETE 2,000 PSI SHALL BE USED FOR ALL BLOCKING UNLESS OTHERWISE NOTED ON STANDARD DETAILS AND / OR PLANS.

THE MINIMUM VERTICAL DIMENSION OF ALL BLOCKING SHALL BE 1.5 TIMES THE PIPE DIAMETER WITH AT LEAST 0.75 TIMES THE PIPE DIAMETER EXTENDING BOTH ABOVE AND BELOW THE PIPE CENTERLINE. THIS DIMENSION DETERMINES THE "A" DIMENSION FOR 11-1/4" BENDS.

FOR 22-1/2°, 45 , 90 , AND TEES AND PLUGS, THE VERTICAL DIMENSION SHALL BE EQUAL TO THE HORIZONTAL DIMENSION SHOWN TO PRODUCE THE REQUIRED MINIMUM AREA.

ALL MINIMUM AREAS ARE IN SQUARE FEET.

BLOCKING TO BE AGAINST UNDISTURBED TRENCH WALLS AND BOTTOM.

HORIZONTAL THRUST BLOCKING DETAIL

NO SCALE

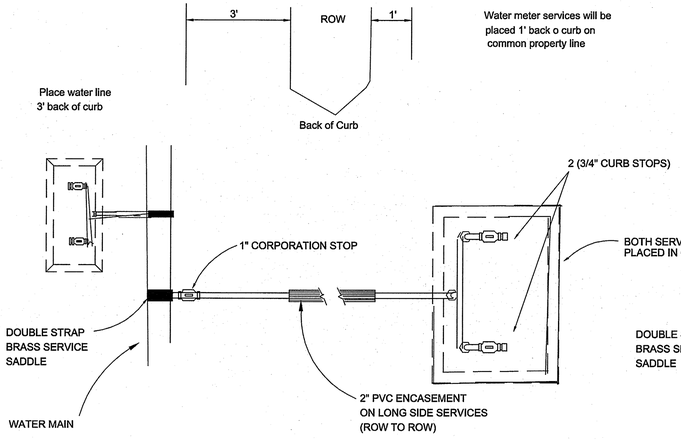

PLAN VIEW

NOTES
1. WHERE TAPPING EXISTING MAINS OR PVC WATER MAINS, DOUBLE STRAPPED BRONZE, STAINLESS STEEL, OR EPOXY COATED DUCTILE IRON SADDLES SHALL BE USED.
2. COPPER SERVICES SHALL BE TYPE K CONTINUOUS WITH NO JOINTS FROM CORP. STOP TO QUARTER BEND.
3. ALL COPPER FITTINGS SHALL BE COMPRESSION FITTINGS.
4. METERS SHALL NOT BE INSTALLED IN EXISTING OR PROPOSED SIDEWALK OR DRIVEWAYS.

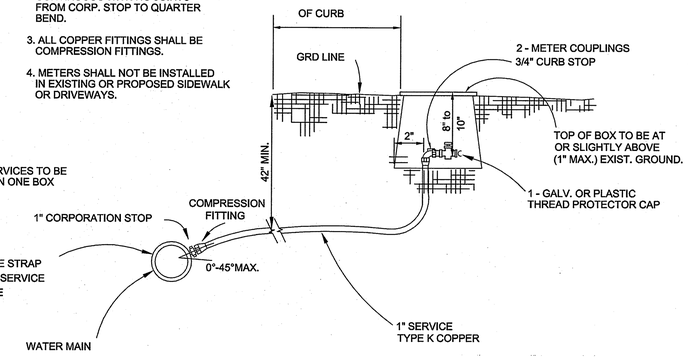

ELEVATION

SERVICE CONNECTION DETAIL (LOTS SMALLER THAN 10,000 S.F.)

NO SCALE

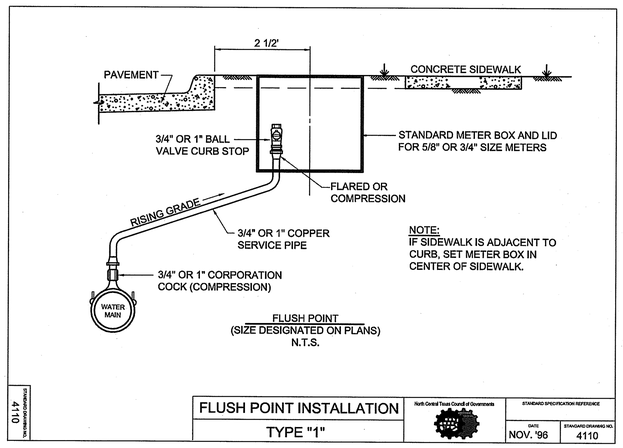

FLUSH POINT INSTALLATION	North Central Texas Council of Governments	STANDARD SPECIFICATION REFERENCE
TYPE "1"		DATE: NOV. '96 / STANDARD DRAWING NO.: 4110

4110

RECORD DRAWING

ALL INFORMATION SHOWN ON THESE PLANS WAS FURNISHED BY THE CONTRACTOR. ALL RESPONSIBILITY FOR THE ACCURACY BELONGS TO THE CONTRACTOR.

Duc Tran
USA PROFESSIONAL SERVICES GROUP, INC.

DATE: August 15, 2013

CITY OF CELINA, TEXAS

WATER DISTRIBUTION SYSTEM
STANDARD DETAILS

REV	DESCRIPTION	DATE

THE CARTER RANCH - PHASE VA
CITY OF CELINA, COLLIN COUNTY, TEXAS

WATER DETAILS

19 FM LTD.
1221 North Interstate 35, Suite 200
Carrollton, Texas 75006
Phone (469) 892-7200 Fax (469) 892-7201

1/15/13
STATE OF TEXAS
JAMES SCOTT YOUNG
69031
REGISTERED PROFESSIONAL ENGINEER

USA PROFESSIONAL SERVICES GROUP, INC.
TEXAS BOARD OF PROFESSIONAL ENGINEERS
REGISTERED ENGINEERING FIRM F-1845
CIVIL ENGINEERS • SURVEYORS
PLANNERS • LANDSCAPE ARCHITECTS
1525 VICEROY DRIVE
DALLAS, TEXAS 75235
(214) 634-3300 FAX (214) 634-3338

DATE: January 2013
SCALE: NOT TO SCALE
SHEET: 22 OF 28
PROJECT NO. 2009016.02

P:\Sdskemgn\2009016.02\Dwg\ 2009016_02-wd.dwg, 11/12/2009 10:45:18 AM, James Gardella

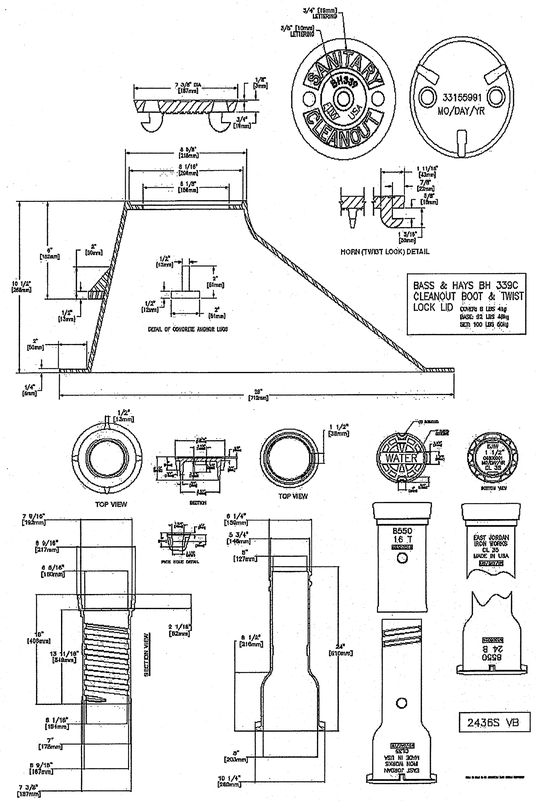

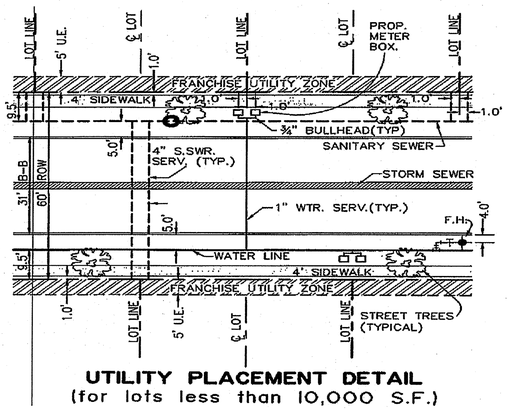

UTILITY PLACEMENT DETAIL
(for lots less than 10,000 S.F.)

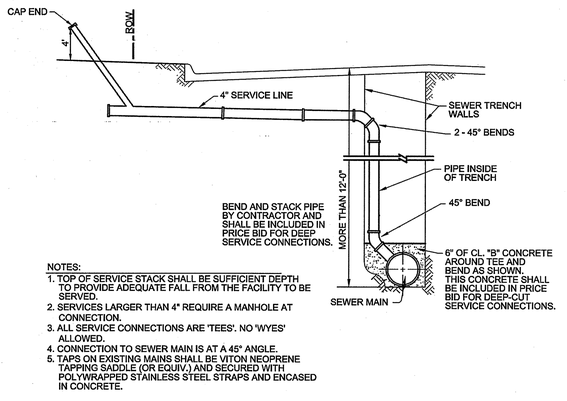

NOTES:
1. TOP OF SERVICE STACK SHALL BE SUFFICIENT DEPTH TO PROVIDE ADEQUATE FALL FROM THE FACILITY TO BE SERVED.
2. SERVICES LARGER THAN 4" REQUIRE A MANHOLE AT CONNECTION.
3. ALL SERVICE CONNECTIONS ARE 'TEES'. NO 'WYES' ALLOWED.
4. CONNECTION TO SEWER MAIN IS AT A 45° ANGLE.
5. TAPS ON EXISTING MAINS SHALL BE VITON NEOPRENE TAPPING SADDLE (OR EQUIV.) AND SECURED WITH POLYWRAPPED STAINLESS STEEL STRAPS AND ENCASED IN CONCRETE.

DEEP-CUT SEWER SERVICE
NTS

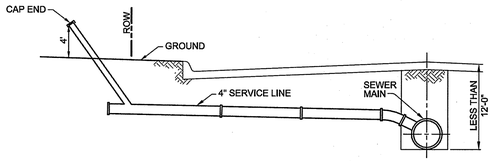

STANDARD SEWER SERVICE
NTS

RECORD DRAWING

ALL INFORMATION SHOWN ON THESE PLANS WAS FURNISHED BY THE CONTRACTOR. ALL RESPONSIBILITY FOR THE ACCURACY BELONGS TO THE CONTRACTOR.

Duc Tran
USA PROFESSIONAL SERVICES GROUP, INC.

DATE: August 15, 2013

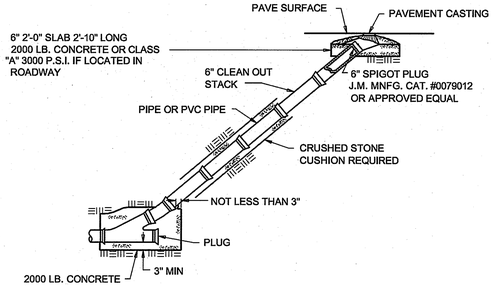

STANDARD CLEANOUT
NTS

SANITARY SEWER AND WATER LINE CROSSING DETAILS

CASE 1
NEW WATER LINE OVER NEW
NON-PRESSURE RATED SEWER LINE
2' TO 9' VERTICAL SEPARATION

WHERE A NEW POTABLE WATERLINE CROSSES A NEW, NON-PRESSURE RATED WASTEWATER MAIN OR LATERAL AND THE STANDARD PIPE SEGMENT LENGTH OF THE WASTEWATER MAIN OR LATERAL IS AT LEAST 18 FEET, ONE SEGMENT OF THE WATERLINE PIPE SHALL BE CENTERED OVER THE WASTEWATER MAIN OR LATERAL SUCH THAT THE JOINTS OF THE WATERLINE PIPE ARE EQUIDISTANT AND AT LEAST NINE FEET HORIZONTALLY FROM THE CENTERLINE OF THE WASTEWATER MAIN OR LATERAL. THE POTABLE WATERLINE SHALL BE AT LEAST TWO FEET ABOVE THE WASTEWATER MAIN OR LATERAL. WHENEVER POSSIBLE, THE CROSSING SHALL BE CENTERED BETWEEN THE JOINTS OF THE WASTEWATER MAIN OR LATERAL. THE WASTEWATER PIPE SHALL HAVE A MINIMUM PIPE STIFFNESS OF 115 PSI AT 5.0% DEFLECTION. THE WASTEWATER MAIN OR LATERAL SHALL BE EMBEDDED IN CEMENT STABILIZED SAND (SEE BELOW) FOR THE TOTAL LENGTH OF ONE PIPE SEGMENT PLUS 12 INCHES BEYOND THE JOINT ON EACH END (§290.44(e)(4)(B)(iii)).

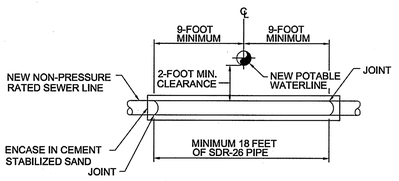

CASE 3
NEW ENCASED POTABLE WATERLINE UNDER A
NEW WASTEWATER LINE

WHEN A NEW WATERLINE CROSSES UNDER A WASTEWATER MAIN OR LATERAL (§290.44(e)(4)(B)(iv)(iii)). THE WATERLINE SHALL BE ENCASED IN A 18-FOOT (OR LONGER) SECTION OF PIPE. FLEXIBLE ENCASING PIPE SHALL HAVE A MINIMUM PIPE STIFFNESS OF 115 PSI AT 5.0% DEFLECTION. THE ENCASING PIPE SHALL BE CENTERED ON THE WATERLINE AND SHALL BE AT LEAST TWO NOMINAL PIPE DIAMETERS LARGER THAN THE WASTEWATER MAIN OR LATERAL. THE SPACE AROUND THE CARRIER PIPE SHALL BE SUPPORTED AT FIVE-FOOT (OR LESS) INTERVALS WITH SPACERS OR BE FILLED TO THE SPRINGLINE WITH WASHED SAND. EACH END OF THE CASING SHALL BE SEALED WITH WATERTIGHT NON-SHRINK CEMENT GROUT OR A MANUFACTURED WATERTIGHT SEAL. AN ABSOLUTE MINIMUM SEPARATION DISTANCE OF SIX INCHES BETWEEN THE ENCASEMENT PIPE AND THE WATERLINE SHALL BE PROVIDED. THE WASTEWATER LINE SHALL BE LOCATED BELOW THE WATERLINE (§290.44(e)(4)(B)(iv)(II)).

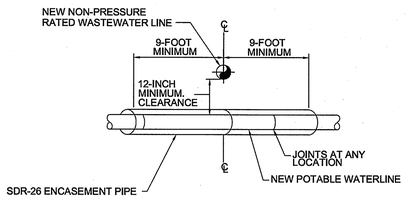

CASE 8
NEW WATER LINE OVER EXISTING
NON-PRESSURE RATED SEWER LINE

WHERE A NEW POTABLE WATERLINE CROSSES AN EXISTING, NON-PRESSURE RATED WASTEWATER MAIN OR LATERAL, ONE SEGMENT OF THE WATERLINE PIPE SHALL BE CENTERED OVER THE WASTEWATER MAIN OR LATERAL SUCH THAT THE JOINTS OF THE WATERLINE PIPE ARE EQUIDISTANT AND AT LEAST NINE FEET HORIZONTALLY FROM THE CENTERLINE OF THE WASTEWATER MAIN OR LATERAL. THE POTABLE WATERLINE SHALL BE AT LEAST TWO FEET ABOVE THE WASTEWATER MAIN OR LATERAL. WHENEVER POSSIBLE, THE CROSSING SHALL BE CENTERED BETWEEN THE JOINTS OF THE WASTEWATER MAIN OR LATERAL. IF THE EXISTING WASTEWATER MAIN OR LATERAL IS DISTURBED OR SHOWS SIGNS OF LEAKING, IT SHALL BE REPLACED FOR AT LEAST NINE FEET IN BOTH DIRECTIONS (§290.44(e)(4)(B)(i)).

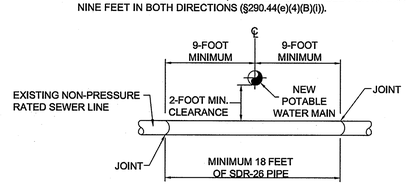

GENERAL NOTES:

1) ENCASEMENT PIPE SHALL MEET THE FOLLOWING REQUIREMENTS:
   -SDR-26 OR 150 PSI PRESSURE CLASS PIPE AS NOTED
   -MINIMUM 18 FEET LONG
   -DIAMETER OF ENCASEMENT PIPE = DIAMETER OF CARRIER PIPE + 2 NOMINAL PIPE SIZES MINIMUM (EXAMPLE: 8" CARRIER NEEDS 12" ENCASEMENT)
   -SPACE AROUND CARRIER PIPE SHALL BE SUPPORTED AT MINIMUM 5 FEET INTERVALS WITH SPACERS, OR FILLED TO SPRINGLINE WITH WASHED SAND
   -ENCASEMENT PIPE SHALL BE CENTERED ON THE CROSSING
   -BOTH ENDS TO BE SEALED WITH CEMENT GROUT OR A MANUFACTURED WATER-TIGHT SEAL
2) CEMENT STABILIZED SAND EMBEDMENT SHALL MEET THE FOLLOWING:
   -MINIMUM 2.5 BAGS OF CEMENT PER C.Y. OF MIXTURE
   -MINIMUM EMBEDMENT THICKNESS IS TO BE AS FOLLOWS: 6" ABOVE, 4" BELOW AND 6" ON THE SIDES OF THE PIPE
   -EMBEDMENT SHALL EXTEND A MINIMUM OF 12" BEYOND PIPE JOINTS ON EACH END
3) SDR 26 SEWER PIPE MEETS THE T.N.R.C.C. STIFFNESS REQUIREMENT OF 115 PSI AT 5% DEFLECTION
4) WHERE LEAKAGE/NO LEAKAGE OF EXISTING SEWERS MUST BE DETERMINED, IT SHALL BE BY A LICENSED TEXAS PROFESSIONAL ENGINEER
5) 18' MINIMUM LENGTH PIPE OR ENCASEMENT SEGMENTS MUST BE CENTERED ON THE CROSSING (JOINTS 9' FROM THE CROSSING)
6) THESE DETAILS AND NOTES ARE INTENDED TO COMPLY WITH THE T.N.R.C.C. CHAPTER 290 (WATER) DATED FEBRUARY 2004, AND DRAFT CHAPTER 217 (SEWER) RULE LOG 95100-317-WT
7) WHERE ENCASEMENT PIPE IS SPECIFIED, CLEARANCES ARE MEASURED FROM THE ENCASEMENT PIPE NOT THE CARRIER PIPE
8) PIPE MEETING AWWA C900 OR C905 DR-18 MINIMUM WILL MEET THE T.N.R.C.C. REQUIREMENTS FOR 150 PSI PIPE, THIS PIPE MAY BE SUBSTITUTED FOR SDR-26 PIPE

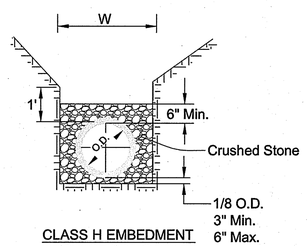

CLASS H EMBEDMENT
P.V.C. PIPE ONLY
STD. P.V.C. SEWER INSTALLATION
STD. P.V.C., R.C.P. & DUCTILE WATER INSTALLATION.

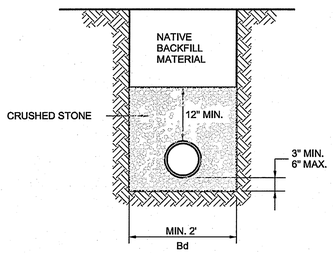

CLASS "4"
WASTEWATER EMBEDMENT
NTS

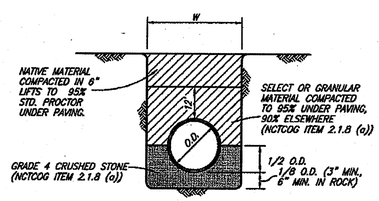

CLASS B+ EMBEDMENT
STD PVC WATER OR D.I.P.

THE CARTER RANCH - PHASE VA
CITY OF CELINA, COLLIN COUNTY, TEXAS

SANITARY SEWER DETAILS

REV	DESCRIPTION	DATE

19 FM LTD.
1221 North Interstate 35, Suite 200
Carrollton, Texas 75006
Phone (469) 892-7200 Fax (469) 892-7201

STATE OF TEXAS
JAMES SCOTT YOUNG
69031
REGISTERED PROFESSIONAL ENGINEER
8/15/13

USA PROFESSIONAL SERVICES GROUP, INC.
TEXAS BOARD OF PROFESSIONAL ENGINEERS REGISTERED ENGINEERING FIRM F-1846
CIVIL ENGINEERS • SURVEYORS
PLANNERS • LANDSCAPE ARCHITECTS
1525 VICEROY DRIVE
DALLAS, TEXAS 75235
(214) 634-3300 FAX (214) 634-3338

DATE: January 2013
SCALE: NOT TO SCALE
SHEET: 23 OF 28
PROJECT NO. 2009016.02

P:\Sdskengin\2009016.02\Dwg\2009016_02-scd.dwg, 11/12/2009 10:46:18 AM, James Gardella

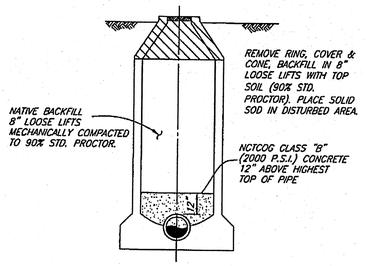

MANHOLE ABANDONMENT

OUTSIDE PAVEMENT AREA

(MHABAN)

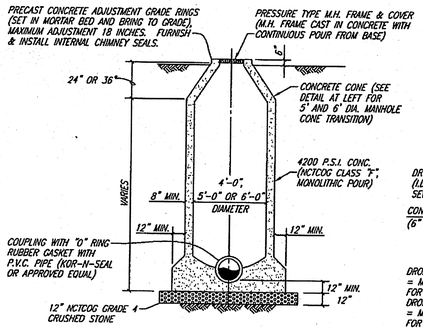

STANDARD MANHOLE ELEVATION

4', 5' & 6' DIAMETER MANHOLES

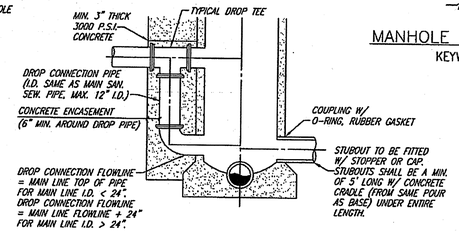

DROP MANHOLE ELEVATION

4', 5' & 6' DIAMETER MANHOLES

SANITARY SEWER MANHOLE (CAST IN PLACE)

NO SCALE

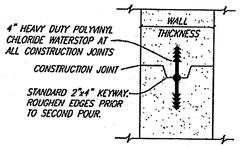

MANHOLE CONSTRUCTION JOINT

KEYWAY WITH WATERSTOP

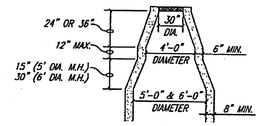

CONE TRANSITION

5' & 6' DIAMETER MANHOLES ONLY

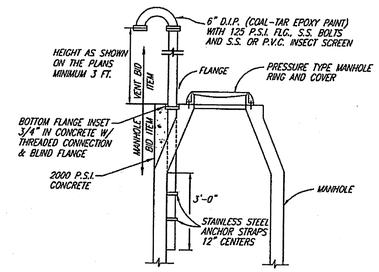

CONE TOP MANHOLE VENT

NO SCALE

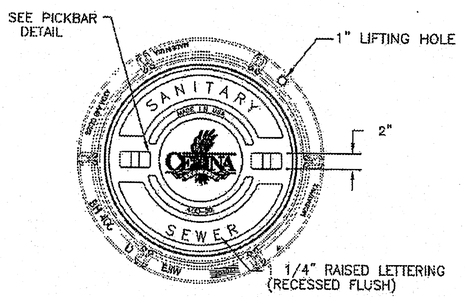

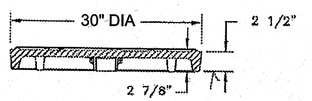

COVER SECTION

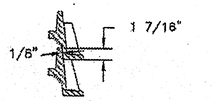

STACK DETAIL

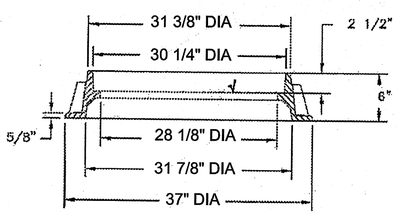

RING SECTION

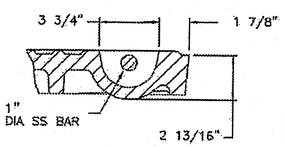

PICKBAR DETAIL

1" DIA. 6" LONG STAINLESS STEEL ANCHOR BOLTS W/ HEX. HEAD NUT IS REQUIRED

STANDARD MANHOLE COVER AND FRAME

NO SCALE

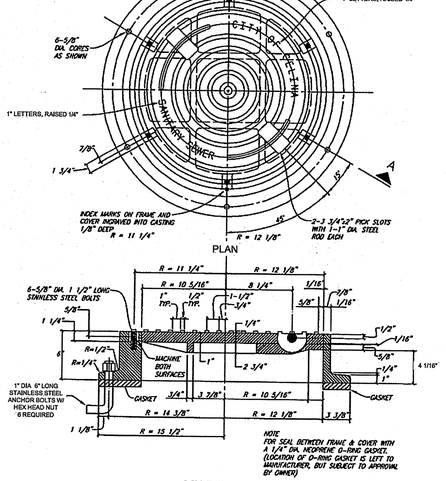

SECTION A–A

TYPE "S" MANHOLE FRAME AND COVER

NO SCALE

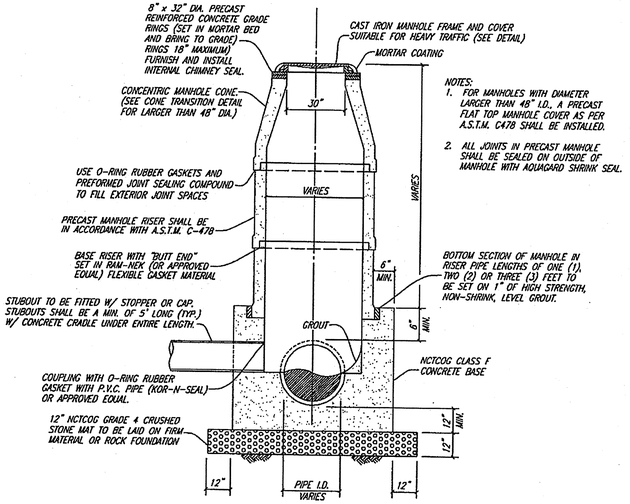

PRECAST CONCRETE MANHOLE

NO SCALE

RECORD DRAWING

ALL INFORMATION SHOWN ON THESE PLANS WAS FURNISHED BY THE CONTRACTOR. ALL RESPONSIBILITY FOR THE ACCURACY BELONGS TO THE CONTRACTOR.

Duc Tran
USA PROFESSIONAL SERVICES GROUP, INC.

DATE: August 15, 2013

THE CARTER RANCH - PHASE VA

CITY OF CELINA, COLLIN COUNTY, TEXAS

SANITARY SEWER DETAILS

REV	DESCRIPTION	DATE

19 FM LTD.
1221 North Interstate 35, Suite 200
Carrollton, Texas 75006
Phone (469) 892-7200 Fax (469) 892-7201

1/15/13

STATE OF TEXAS
JAMES SCOTT YOUNG
69031
REGISTERED PROFESSIONAL ENGINEER

USA PROFESSIONAL SERVICES GROUP, INC.
TEXAS BOARD OF PROFESSIONAL ENGINEERS
REGISTERED ENGINEERING FIRM F-1845
CIVIL ENGINEERS • SURVEYORS
PLANNERS • LANDSCAPE ARCHITECTS
1525 VICEROY DRIVE
DALLAS, TEXAS 75235
(214) 634-3300 FAX (214) 634-3338

DATE:	January 2013
SCALE:	NOT TO SCALE
SHEET:	24 OF 28
PROJECT NO.	2009016.02

P:\Sdesign\2009016.02\Dwg\2009016_02sadt.dwg, 11/12/2009 10:46:19 AM, James Gandolfo

NOTE :
FRAME AND COVER SHALL BE BASS & HAYES PATTERN NO. 400-24 OR EQUAL AND SHALL BE GRAY CAST IRON CONFORMING TO ASTM SPEC. A-48 FOR CLASS 30 CAST IRON.

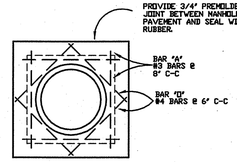

TOP PLAN
TYPE A & TYPE B
STORM SEWER MANHOLE

NOTE : MAXIMUM PIPE SIZE TO BE USED 78"ø

N.T.S.

NOTE :
FRAME AND COVER SHALL BE BASS & HAYES PATTERN NO. 380-24 OR EQUAL AND SHALL BE GRAY CAST IRON CONFORMING TO ASTM SPEC. A-48 FOR CLASS 30 CAST IRON.

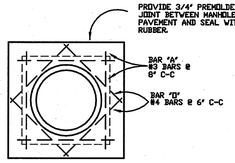

TOP PLAN
TYPE A & TYPE B
STORM SEWER MANHOLE

NOTE : MAXIMUM PIPE SIZE TO BE USED 78"ø

N.T.S.

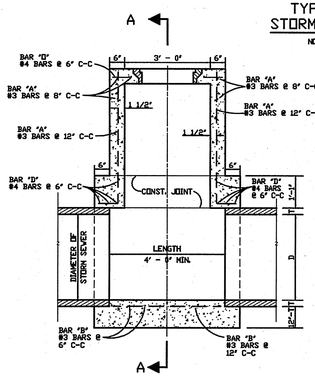

ELEVATION

N.T.S.

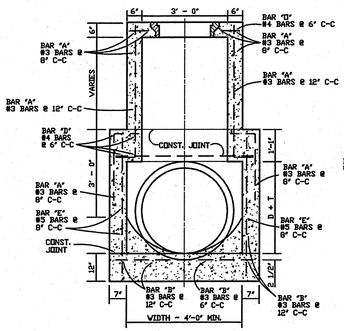

SECTION A-A

N.T.S.

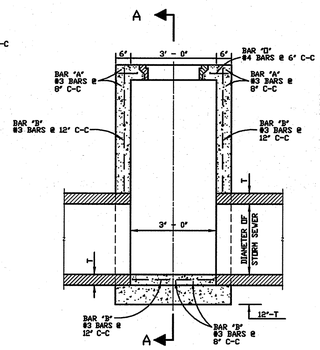

ELEVATION

N.T.S.

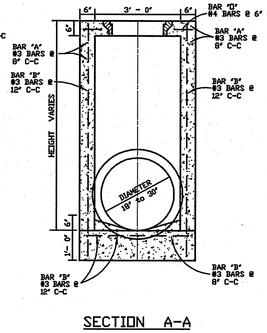

SECTION A-A

N.T.S.

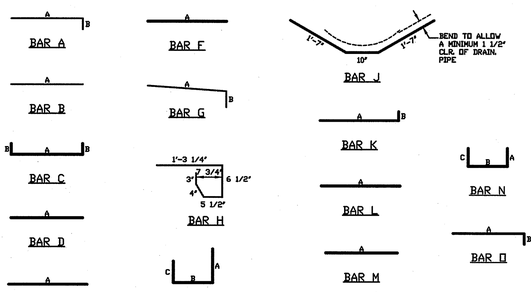

BAR DIAGRAMS

REINFORCING STEEL SCHEDULE

DIMENSIONS SHOWN ARE FOR MAXIMUM SIZE INLETS

INLET LENGTH	BAR TYPE	BAR DIA. (1/8")	NO. REQ'D.	BAR DIMENSIONS A	B	C
10'	A	3	10	3'-2"	0'-3"	-
	B	3	2	8'-10"	-	-
	C	4	16	10'-8"	0'-6"	-
	D	4	4	4'-8"	-	-
	E	5	6	10'-8"	-	-
	F	4	5	1'-2"	-	-
	G	3	5	2'-0"	1'-3"	-
	H	3	15	■	■	■
	I	4	8	4'-8"	3'-2"	3'-2"
	J	5	1	■	■	■
	K	5	4	3'-2"	0'-6"	-
	L	4	5	3'-2"	-	-
	M	4	2	3'-0"	-	-
	N	4	2	4'-8"	3'-2"	4'-8"
12'	A	3	15	3'-2"	0'-6"	-
	B	3	2	11'-6"	-	-
	C	4	16	13'-4"	0'-6"	-
	D	4	9	4'-8"	-	-
	E	5	6	13'-4"	-	-
	F	4	5	1'-2"	-	-
	G	3	12	2'-0"	1'-3"	-
	H	3	26	■	■	■
	I	4	12	4'-8"	3'-2"	3'-2"
	J	5	1	■	■	■
	K	5	6	3'-2"	0'-6"	-
	L	4	11	3'-2"	-	-
	M	4	2	3'-0"	■	■
	N	4	2	4'-8"	3'-2"	4'-8"

■ SEE DIAGRAM FOR DIMENSIONS

RECORD DRAWING

ALL INFORMATION SHOWN ON THESE PLANS WAS FURNISHED BY THE CONTRACTOR. ALL RESPONSIBILITY FOR THE ACCURACY BELONGS TO THE CONTRACTOR.

Duc Tran
USA PROFESSIONAL SERVICES GROUP, INC.
DATE: August 15, 2013

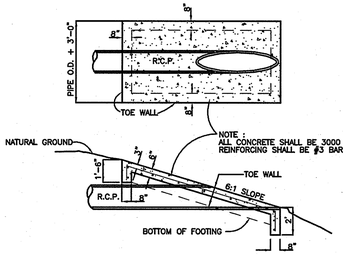

TYPICAL SLOPED END HEADWALL

NTS

PLAN

N.T.S.

NOTE: CAST-IN-PLACE INLETS TO BE MIN. 4200 PSI CONCRETE.

SECTION A-A

N.T.S.

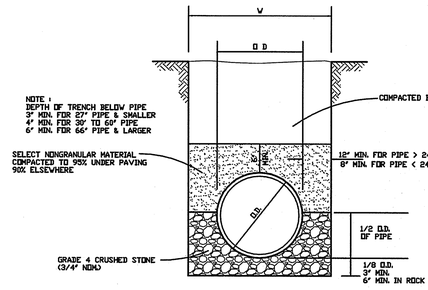

STORM SEWER PIPE BEDDING

N.T.S.

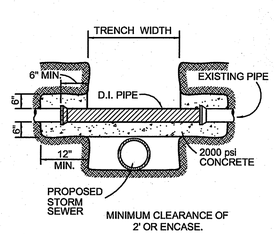

DETAIL OF UTILITY SUPPORT

N.T.S.

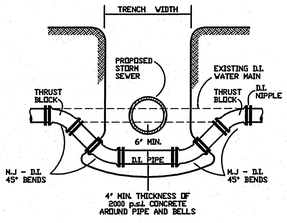

DETAIL FOR WATER MAIN LOWERING

N.T.S.

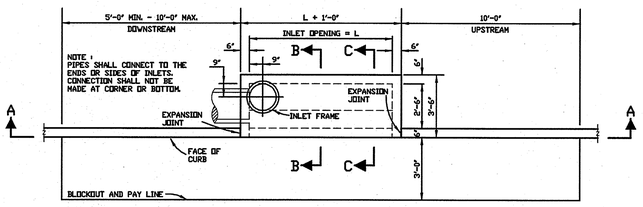

PLAN - STANDARD INLET

N.T.S.

DETAIL OF CONCRETE COLLAR FOR PIPE CONNECTIONS

N.T.S.

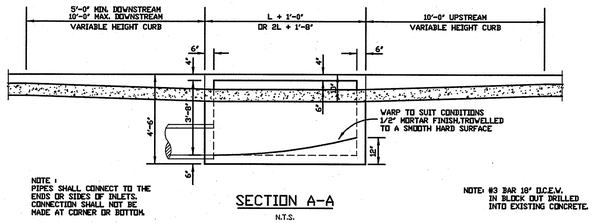

SECTION A-A

N.T.S.

NOTE: #3 BAR 18" O.C.E.W. IN BLOCK OUT DRILLED INTO EXISTING CONCRETE.

NOTE: CAST-IN-PLACE INLETS TO BE MIN. 4200 PSI CONCRETE.

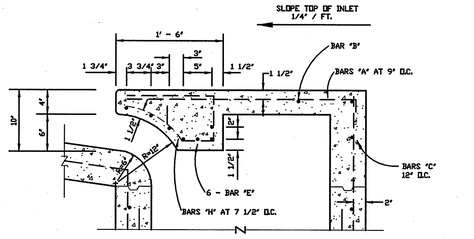

SECTION C-C

N.T.S.

NOTE: CAST-IN-PLACE INLETS TO BE MIN. 4200 PSI CONCRETE.

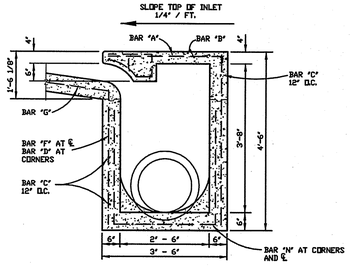

SECTION B-B

N.T.S.

THE CARTER RANCH - PHASE VA
CITY OF CELINA, COLLIN COUNTY, TEXAS

STORM SEWER DETAILS

REV	DESCRIPTION	DATE

19 FM LTD.
1221 North Interstate 35, Suite 200
Carrollton, Texas 75006
Phone (469) 892-7200 Fax (469) 892-7201

1/15/13

STATE OF TEXAS
JAMES SCOTT YOUNG
69031
REGISTERED PROFESSIONAL ENGINEER

USA PROFESSIONAL SERVICES GROUP, INC.
TEXAS BOARD OF PROFESSIONAL ENGINEERS REGISTERED ENGINEERING FIRM F-1845
CIVIL ENGINEERS • SURVEYORS
PLANNERS • LANDSCAPE ARCHITECTS
1525 VICEROY DRIVE
DALLAS, TEXAS 75235
(214) 634-3300 FAX (214) 634-3338

DATE: January 2013
SCALE: NOT TO SCALE
SHEET: 25 OF 28
PROJECT NO. 2009016.02

P:\Sskeegan\2009016.02\Dwg\ 2009016_02-sdd.dwg, 11/12/2009 10:46:18 AM, James Gandella

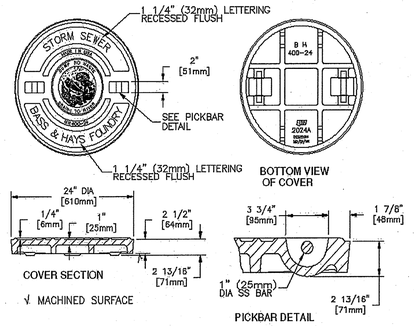

BH and Bass & Hays are registered trademarks of Bass & Hays Foundry, Inc.

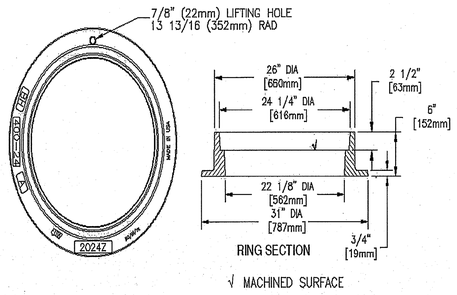

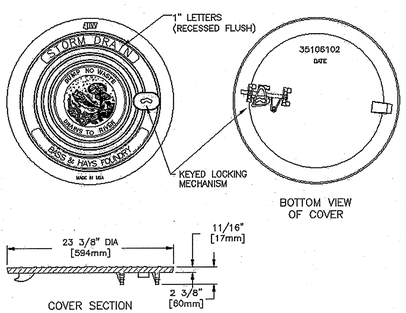

BH and Bass & Hays are registered trademarks of Bass & Hays Foundry, Inc.

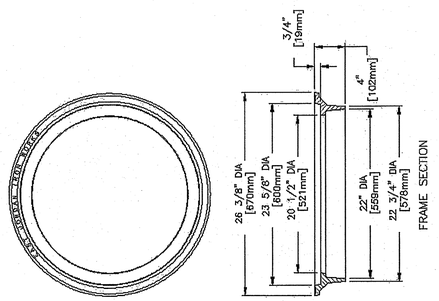

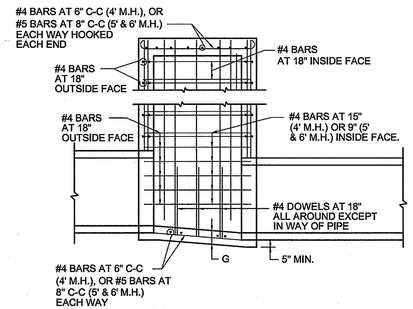

SECTION A-A
N.T.S.

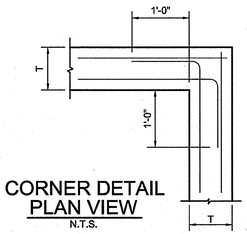

CORNER DETAIL
PLAN VIEW
N.T.S.

NOTES:

1. SLOPE INVERT OF MANHOLE AS INDICATED ON PLAN-PROFILE SHEET.
2. LAYERS OF REINFORCING STEEL NEAREST THE INTERIOR AND EXTERIOR SURFACE SHALL HAVE A COVER OF 2" TO THE CENTER OF BARS, UNLESS OTHERWISE NOTED.
3. CONCRETE SHALL BE CLASS "A".

STORMWATER MANHOLE	North Central Texas Council of Governments	STANDARD SPECIFICATION REFERENCE 6.7.	
4', 5', OR 6' SQUARE		DATE NOV. '96	STANDARD DRAWING NO. 6010B

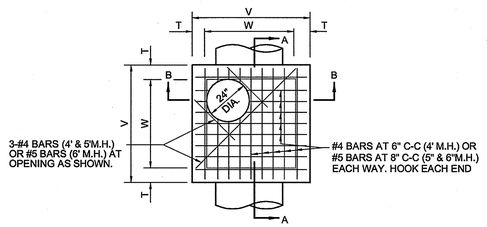

PLAN
N.T.S.

M.H. SIZE(W)	V	T	E	F	G	H
4'	5'-4"	8"	6"	9"	6"	1'-3"
5'	6'-4"	8"	6"	12"	8"	1'-8"
6'	7'-6"	9"	9"	16"	10"	2'-2"

TABLE OF DIMENSIONS
N.T.S.

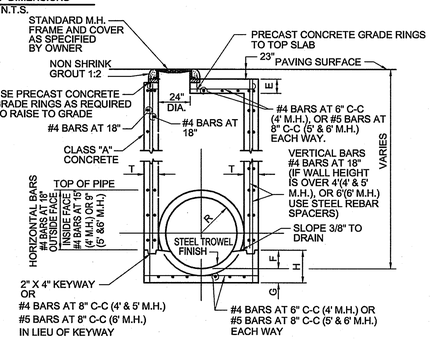

SECTION B-B
N.T.S.

STORMWATER MANHOLE	North Central Texas Council of Governments	STANDARD SPECIFICATION REFERENCE 6.7.	
4', 5', OR 6' SQUARE		DATE NOV. '96	STANDARD DRAWING NO. 6010A

RECORD DRAWING

ALL INFORMATION SHOWN ON THESE PLANS WAS FURNISHED BY THE CONTRACTOR. ALL RESPONSIBILITY FOR THE ACCURACY BELONGS TO THE CONTRACTOR.

Duc Tran
USA PROFESSIONAL SERVICES GROUP, INC.

DATE: August 15, 2013

REV	DESCRIPTION	DATE

THE CARTER RANCH - PHASE VA
CITY OF CELINA, COLLIN COUNTY, TEXAS

STORM SEWER DETAILS

19 FM LTD.
1221 North Interstate 35, Suite 200
Carrollton, Texas 75006
Phone (469) 892-7200 Fax (469) 892-7201

James Scott Young 1/15/13
STATE OF TEXAS
JAMES SCOTT YOUNG
69031
REGISTERED PROFESSIONAL ENGINEER

USA PROFESSIONAL SERVICES GROUP, INC.
TEXAS BOARD OF PROFESSIONAL ENGINEERS REGISTERED ENGINEERING FIRM F-1845
CIVIL ENGINEERS • SURVEYORS
PLANNERS • LANDSCAPE ARCHITECTS
1525 VICEROY DRIVE
DALLAS, TEXAS 75235
(214) 634-3300 FAX (214) 634-3338

DATE: January 2013
SCALE: NOT TO SCALE
SHEET: 26 OF 28
PROJECT NO. 2009016.02

P:\Submittal\2009016.02\Dwg\ 20090916_02-ssd.dwg, 11/12/2009 10:46:19 AM, James Gandilla

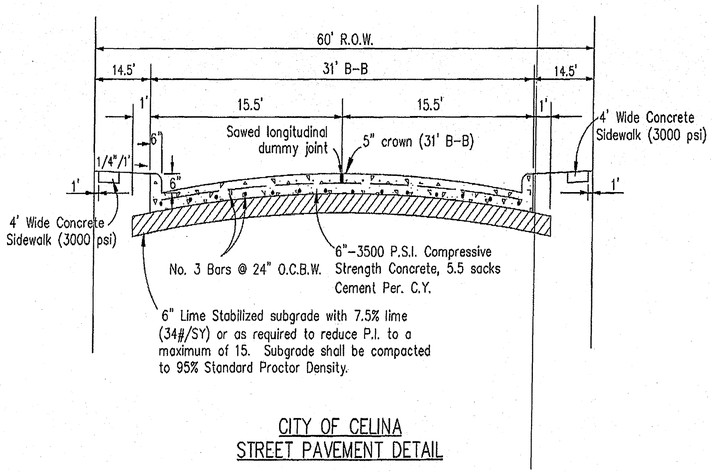

CITY OF CELINA
STREET PAVEMENT DETAIL

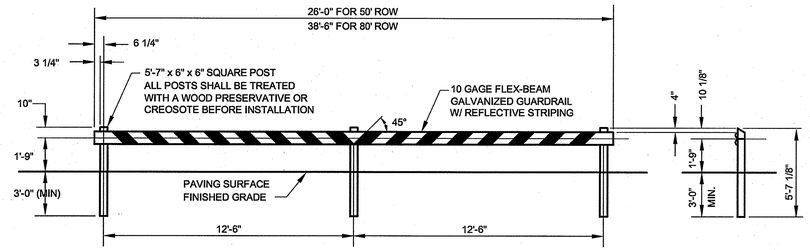

TEMPORARY BARRICADE DETAIL
NTS

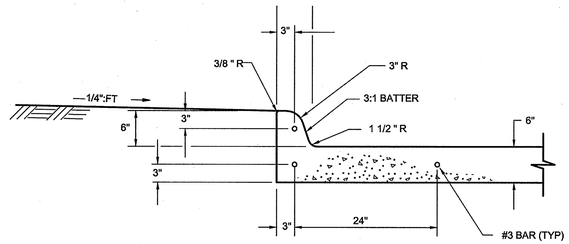

STANDARD INTEGRAL CURB
NTS

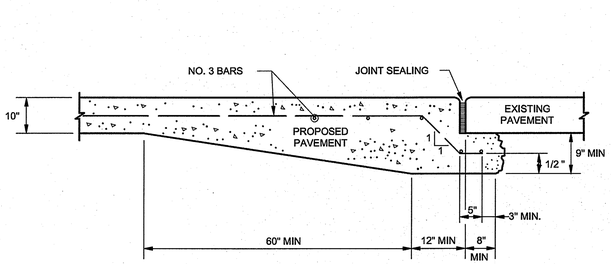

UNDERCUT STREET HEADER DETAIL
NTS

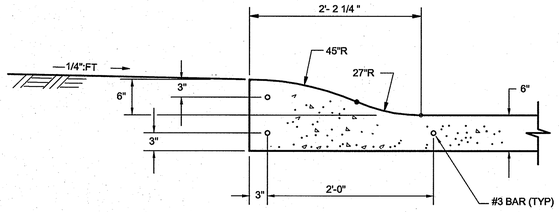

"MODIFIED" MOUNTABLE CURB
NTS

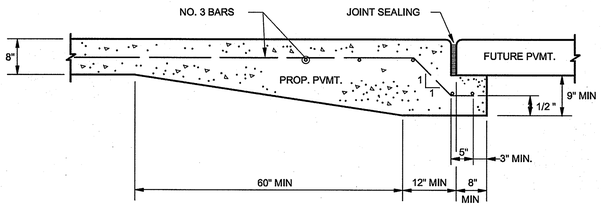

MODIFIED STREET HEADER DETAIL
NTS

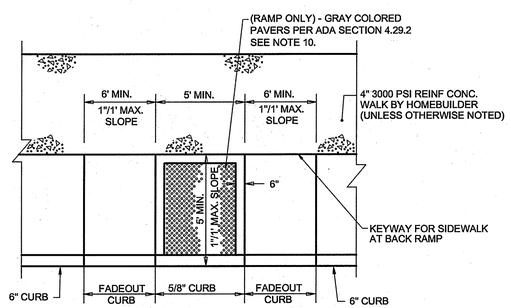

BARRIER FREE RAMP IN STRAIGHT CURB
SIDEWALK ADJACENT TO CURB

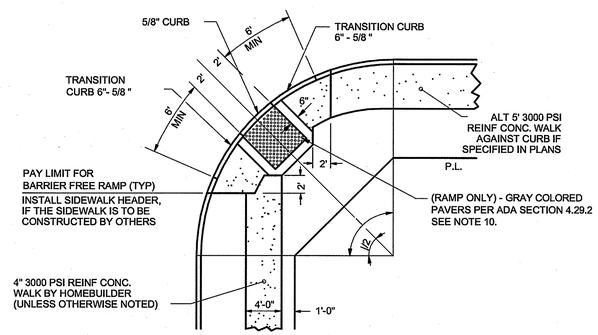

DEPRESSED CURB AT STREET INTERSECTION
NTS

RECORD DRAWING

ALL INFORMATION SHOWN ON THESE PLANS WAS FURNISHED BY THE CONTRACTOR. ALL RESPONSIBILITY FOR THE ACCURACY BELONGS TO THE CONTRACTOR.

Duc Tran
USA PROFESSIONAL SERVICES GROUP, INC.

DATE: August 15, 2013

REV	DESCRIPTION	DATE

THE CARTER RANCH - PHASE VA
CITY OF CELINA, COLLIN COUNTY, TEXAS

PAVING DETAILS

19 FM LTD.
1221 North Interstate 35, Suite 200
Carrollton, Texas 75006
Phone (469) 892-7200 Fax (469) 892-7201

STATE OF TEXAS
JAMES SCOTT YOUNG
69031
REGISTERED PROFESSIONAL ENGINEER
7/26/13

USA PROFESSIONAL SERVICES GROUP, INC.
TEXAS BOARD OF PROFESSIONAL ENGINEERS
REGISTERED ENGINEERING FIRM F-1845
CIVIL ENGINEERS • SURVEYORS
PLANNERS • LANDSCAPE ARCHITECTS
1525 VICEROY DRIVE
DALLAS, TEXAS 75235
(214) 634-3300 FAX (214) 634-3338

DATE: January 2013
SCALE: NOT TO SCALE
SHEET: 27 OF 28
PROJECT NO. 2009016.02

P:\Sdskengin\2009016.02\Dwg\ 2009016_02-pvd.dwg, 11/12/2009 10:46:18 AM, James Gandella

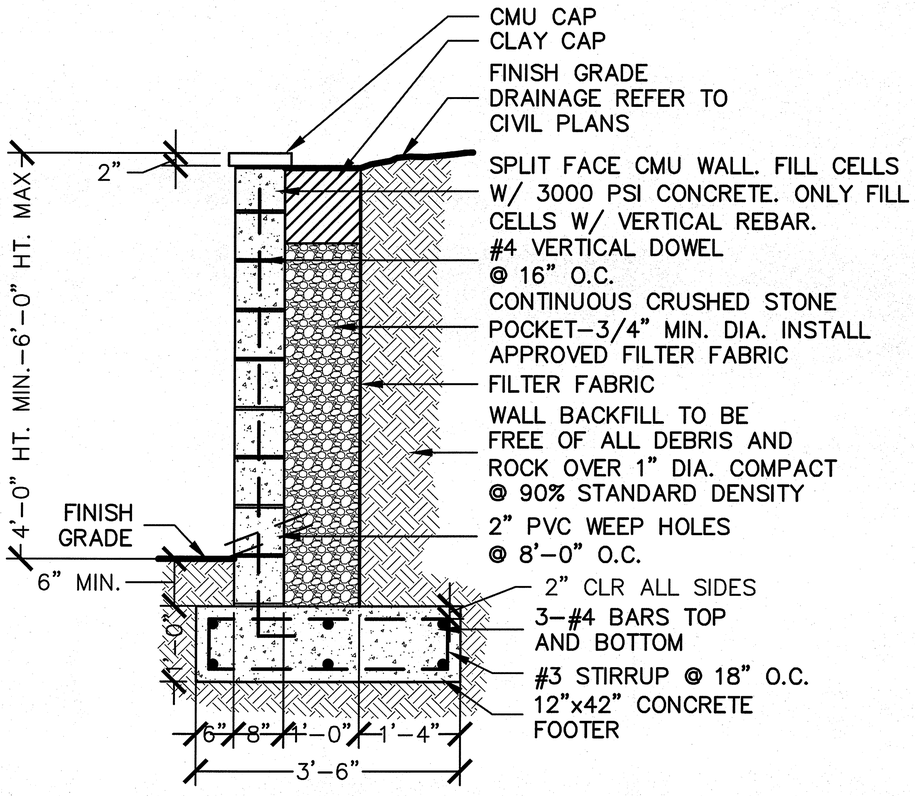

A 4'-0"-6'-0" HT. WALL
SECTION SCALE: 1/2" = 1'-0"

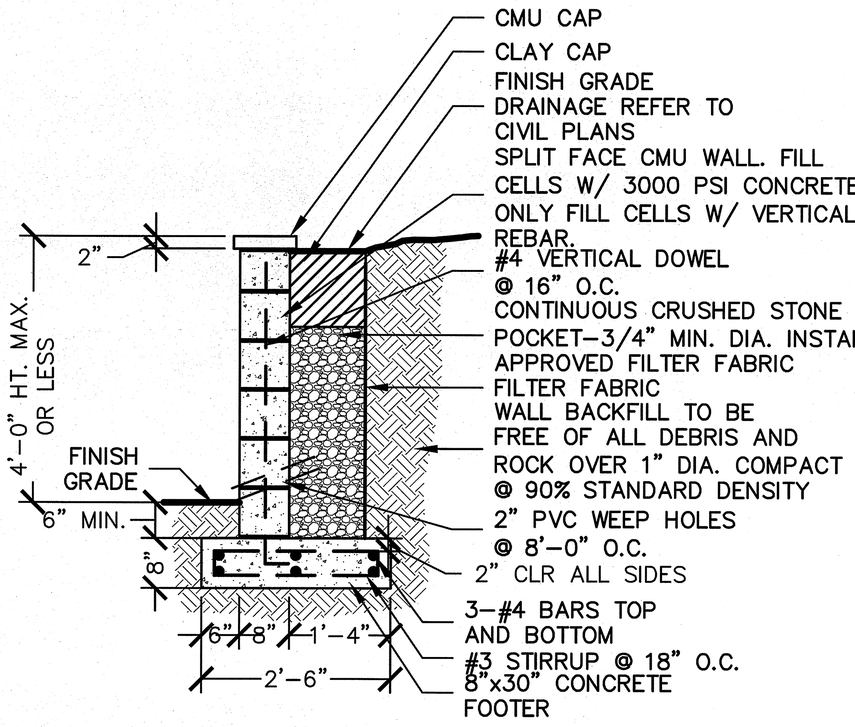

B 4'-0"OR LESS HT. WALL
SECTION SCALE: 1/2" = 1'-0"

RETAINING WALL DESIGNED TO BE CONSTRUCTED IN THE CARTER RANCH-PHASE VA, CELINA, TX. DESIGN BASED ON USA PROFESSIONAL SERVICES GROUP, INC, PRELIMINARY GRADING PLAN DATED NOVEMBER 2012 AND GEOTECHNICAL REPORT NO. 12-15659 BY JRB ENGINEERING AS PROVIDED BY CLIENT/CONTRACTOR. ENGINEER TO BE NOTIFIED PRIOR TO CONSTRUCTION SHOULD RETAINING WALL LOCATIONS AND/OR ELEVATIONS CHANGE ON FINAL GRADING PLAN.

STATE OF TEXAS
RICHARD REAVES
91128
LICENSED
PROFESSIONAL ENGINEER

1/21/13

RECORD DRAWING

ALL INFORMATION SHOWN ON THESE PLANS WAS FURNISHED BY THE CONTRACTOR. ALL RESPONSIBILITY FOR THE ACCURACY BELONGS TO THE CONTRACTOR.

Duc Tran
USA PROFESSIONAL SERVICES GROUP, INC.

DATE: August 15, 2013

REAVES CONSULTING

REAVES CONSULTING
831 ARROWHEAD DRIVE
PROSPER, TEXAS 75078
972.347.3908
RICHARD@REAVESCONSULTINGLLC.COM

F-10826

RETAINING WALL

LOCATION

THE CARTER RANCH - PHASE VA
CITY OF CELINA,
COLLIN COUNTY, TEXAS

SHEET NO. 1 OF 1

PROJECT NO. CAD014

DATE: 01-21-2013

SCALE: 1/2"=1'-0"

DRAWN BY: AEW

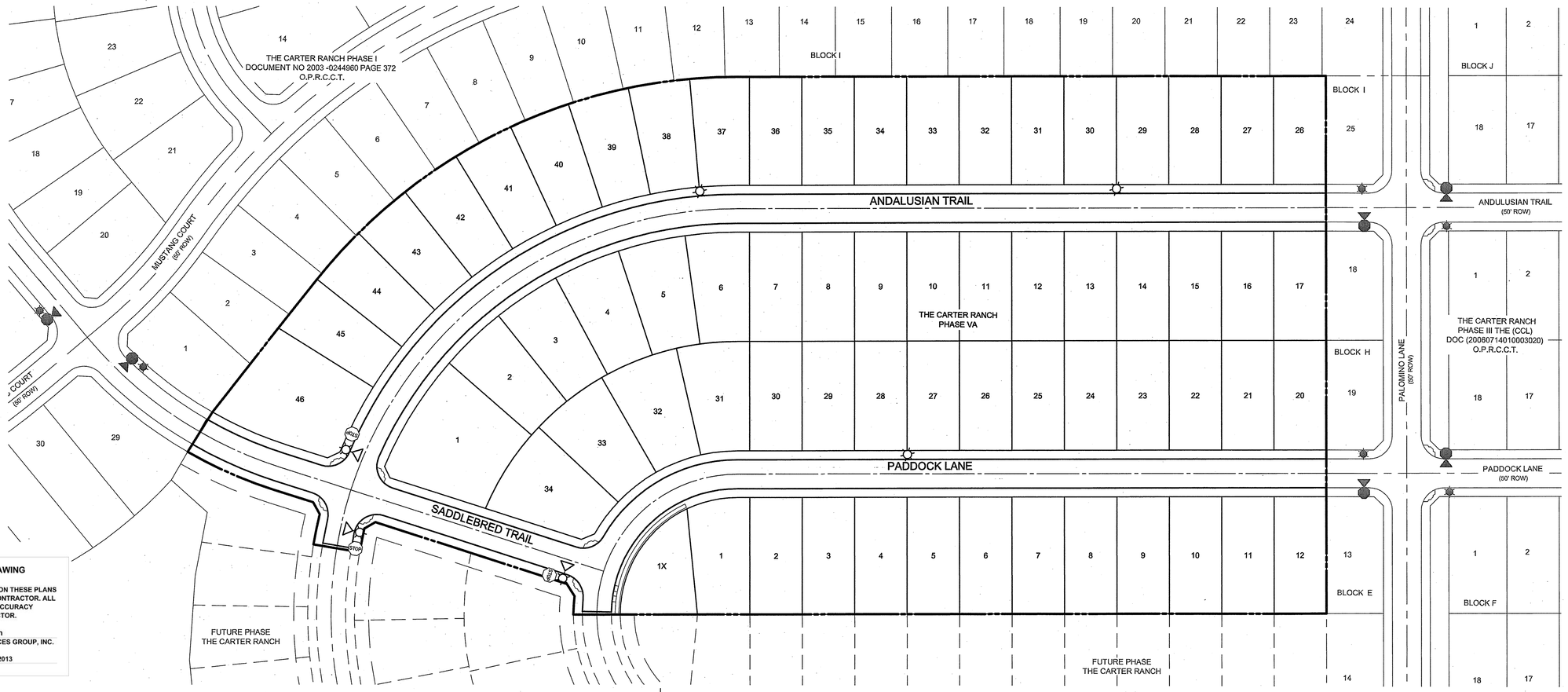

RECORD DRAWING

ALL INFORMATION SHOWN ON THESE PLANS WAS FURNISHED BY THE CONTRACTOR. ALL RESPONSIBILITY FOR THE ACCURACY BELONGS TO THE CONTRACTOR.

Duc Tran
USA PROFESSIONAL SERVICES GROUP, INC.

DATE: August 15, 2013

SIGNS & STREET LIGHT TABLE

SYMBOL	DESRIPTION	QTY.
	PROPOSED STREET LIGHT (SEE NOTE 5 BELOW)	6
	EXISTING STREET LIGHT	6
STOP	STOP SIGN	3
	EXISTING STOP SIGN	6
	STREET NAME (SEE NOTE 5 BELOW)	3
	EXISTING STREET SIGN	6

NOTES:

1. ILLUMINATION CONSTRUCTION TO BE COORDINATED WITH FEC/TXU ELECTRIC DELIVERY (BRIAN GREEN), PRIOR TO CONSTRUCTION.
2. LIGHT SOURCE HPS LAMP SIZE AND WATT IS 200 AND MOUNTING HEIGHT IS 32'.
3. AVERAGE ILLUMINATION INTENSITY IS 0.6 TO 0.9 FOOT CANDLES.
4. WHERE LIGHT POLE IS LOCATED MID BLOCK, IT SHALL BE PLACED ON PROPERTY LINE TO AVOID INTERFERENCE WITH POTENTIAL DRIVEWAY LOCATION.
5. WHERE LIGHT POLE AND STOP SIGN ARE PROPOSED ON THE SAME CORNER, STOP SIGNS AND STREET SIGNS SHALL BE MOUNTED TO LIGHT POLE.
6. IF THERE IS A AMENITY CENTER LIGHTING PLAN IT WILL BE DESIGNED BY OTHERS.

BENCHMARKS

TBM #1= Centerline of existing sanitary manhole at the centerline intersection of Appaloosa Lane and Equine Lane located in "The Carter Ranch Phase IIA". Elevation = 687.57'feet

TBM #2 = "X" Found in concrete at the centerline intersection of Equine Lane and Old Stables Drive located in "The Carter Ranch Phase IIA". Elevation =728.63'feet

CM #5 = Concrete monument with 5/8 inch iron rod with cap stamped "Huitt-Zollars" at the Southeast corner of the intersection of State Highway 289 and County Road 88, located approximately 45' feet South of the centerline of County Road 88 and 112' feet East of the centerline of State Highway 289 Elevation = 681.76' feet

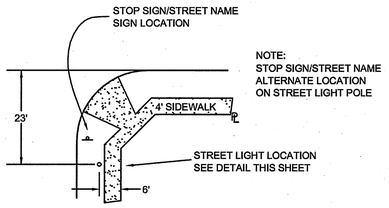

TYPICAL LAYOUT

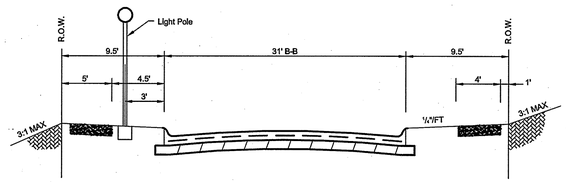

TYPICAL STREET LIGHT LOCATION
N.T.S.

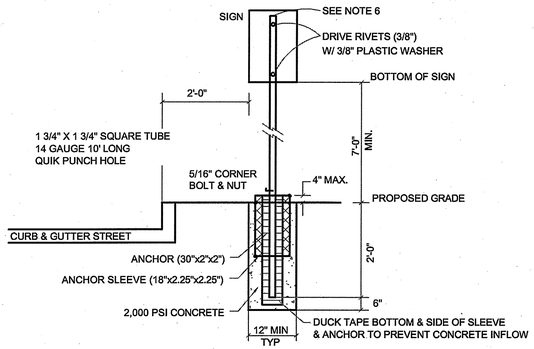

SIGN POST DETAIL
NTS

Celina Street Sign Example

Street Name: 9" initial uppercase letter followed by 4.5" lowercase letters
Must meet 2009 (or latest) MUTCD requirements
9" flat blank, high intensity prismatic.

Front: (Left to Right)

Back: (Left to Right)

STREET NAME BLADE SPECIFICATION

Location:
- 9" flat blades shall be used at all intersections within the interior of the subdivision.
- 9" extruded blades shall be used at intersections where a subdivision roadway intersects a roadway designated as a major or minor thoroughfare and at all other intersections along major and minor thoroughfares.

Blade Requirements:
- 9" Flat Blade shall be aluminum and have a thickness of 0.08 inches.
- 9" Extruded Blade shall be aluminum.

Lettering Alignment:
- Street name is left justified - Block numbers are located upper right corner.
- Abbreviated street designations are located in lower right corner.

Lettering for 9" Extruded Blades:
- Letters are all Uppercase. - Font is Federal Highway SERIES B or Series C (manufacturer will determine best to use based on length of blade and length of name).
- Letters and Numbers in street name are 6" tall.
- Letters in abbreviated street designation are 3" tall (i.e., LN, PKWY, DR, CT, etc).
- Block Numbers are 3" tall.

Sign Sheeting and Colors:
- High Intensity Sheeting.
- Background shall be green.
- Legend shall be white.

No Outlet Streets:
- The letters "NO OUTLET" shall be black uppercase letters on a yellow background.
- The word "NO" shall be centered over the word "OUTLET".
- On 9" flat blades, the font is Federal Highway SERIES B with 1.5" letters.
- On 9" extruded blades, the font is Federal Highway SERIES B with 2.5" letters.
- An arrow pointing in the direction of the no outlet locations shall be below the words "NO OUTLET".
- For a street with only one cul-de-sac end (typical), one side of the blade shall have "NO OUTLET" on the right with the arrow pointing to the right while the opposing side of the blade shall have the "NO OUTLET" on the left with the arrow pointing to the left.
- In the case of a street with two cul-de-sac ends, each side of the blade shall have the words "NO OUTLET" on the right with an arrow pointing to the right and the words "NO OUTLET" on the left with an arrow pointing to the left.

GRAPHIC SCALE

60 0 30 60 120 240

(IN FEET)
1 inch = 60 ft.

REV	DESCRIPTION	DATE

THE CARTER RANCH - PHASE VA
CITY OF CELINA, COLLIN COUNTY, TEXAS

STREET LIGHT & SIGN PLAN

19 FM LTD.
1221 North Interstate 35, Suite 200
Carrollton, Texas 75006
Phone (469) 892-7200 Fax (469) 892-7201

STATE OF TEXAS
JAMES SCOTT YOUNG
69031
REGISTERED
PROFESSIONAL ENGINEER

USA PROFESSIONAL SERVICES GROUP, INC.
TEXAS BOARD OF PROFESSIONAL ENGINEERS
REGISTERED ENGINEERING FIRM F-1845
CIVIL ENGINEERS • SURVEYORS
PLANNERS • LANDSCAPE ARCHITECTS
1525 VICEROY DRIVE
DALLAS, TEXAS 75235
(214) 634-3300 FAX (214) 634-3338

DATE: January 2013
SCALE: 1" = 60'
SHEET: OF
PROJECT NO. 2009016.02

P:\Salkenpin\2009016.02\Dwg\ 2009016_02-StreetSign.dwg, 1/22/2013 6:23:29 PM, James Gardella