PLANS FOR CONSTRUCTION OF

CARTER RANCH OFFSITE WASTEWATER & LIFT STATION NO. 2

AN ADDITION TO THE CITY OF CELINA, TEXAS

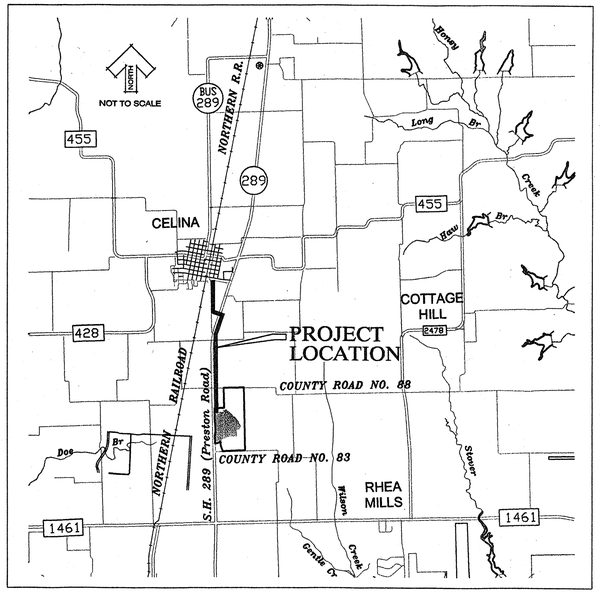

VICINITY MAP
(NOT TO SCALE)

INDEX OF DRAWINGS

1	COVER SHEET
2	GENERAL NOTES
3	15" GRAVITY MAIN & 10" FORCE MAIN PLAN & PROFILE (STA 0+00 - 3+60.40 & STA 1+00 - 7+00)
4	10" FORCE MAIN PLAN & PROFILE (STA 7+00 - 17+00)
5	10" FORCE MAIN PLAN & PROFILE (STA 17+00 - 27+00)
6	10" FORCE MAIN PLAN & PROFILE (STA 27+00 - 37+00)
7	10" FORCE MAIN PLAN & PROFILE (STA 37+00 - 47+00)
8	10" FORCE MAIN PLAN & PROFILE (STA 47+00 - 57+00)
9	10" FORCE MAIN PLAN & PROFILE (STA 57+00 - 67+00)
10	10" FORCE MAIN PLAN & PROFILE (STA 67+00 - 77+00)
11	10" FORCE MAIN PLAN & PROFILE (STA 77+00 - 87+00)
12	10" FORCE MAIN PLAN & PROFILE (STA 87+00 - 97+00)
13	10" FORCE MAIN PLAN & PROFILE (STA 97+00 - 107+00)
14	10" FORCE MAIN PLAN & PROFILE (STA 107+00 - 115+97.58)
15	LIFT STATION SITE PLAN
16	LIFT STATION GRADING PLAN
17	LIFT STATION PLAN AND SECTION
18	LIFT STATION ELECTRICAL SITE PLAN
19	LIFT STATION ELECTRICAL RISER PLAN & NOTES
20	FENCE, LIFT STATION, AND FORCE MAIN DETAILS

PREPARED FOR :

CENTURION AMERICAN DEVELOPMENT GROUP
1905 INDUSTRIAL BOULEVARD
Colleyville, Texas 76034
Phone (817) 421-3040 Fax (817) 421-2385

PREPARED BY:

HUITT-ZOLLARS
Huitt-Zollars, Inc. Dallas
3131 McKinney Avenue, Suite 600
Dallas, Texas 75204-2489
Phone (214) 871-3311 Fax (214) 871-0757

CITY OF CELINA, TEXAS
APPROVED FOR CONSTRUCTION
DATE: 10/20/03
BY: P.A.C.

STATE OF TEXAS
OCIE LEE VEST
80062
REGISTERED PROFESSIONAL ENGINEER
10/16/03

OCTOBER 2003

SS-200310-01

GENERAL NOTES

1. THE CONTRACTOR SHALL HAVE IN HIS POSSESSION PRIOR TO THE COMMENCEMENT OF CONSTRUCTION ALL NECESSARY PERMITS, LICENSES, ETC. THE CONTRACTOR SHALL HAVE AT LEAST ONE SET OF APPROVED ENGINEERING PLANS AND SPECIFICATIONS ON-SITE AT ALL TIMES.

2. ALL WORK SHALL BE PERFORMED IN ACCORDANCE WITH THE N.T.C.O.G. STANDARDS AND SPECIFICATIONS, UNLESS OTHERWISE INDICATED ON THE PLANS. IN THE EVENT AN ITEM IS NOT COVERED IN THE N.T.C.O.G. STANDARDS AND SPECIFICATIONS, THE DESIGN ENGINEER'S DECISION SHALL APPLY. IN THE EVENT OF A CONFLICT WITH N.T.C.O.G., THE DESIGN ENGINEER SHALL BE NOTIFIED TO PROVIDE CLARIFICATION.

3. PRIOR TO ANY CONSTRUCTION THE CONTRACTOR SHALL FAMILIARIZE HIMSELF WITH THE CONTRACT DOCUMENTS, SPECIFICATIONS, AND PLANS INCLUDING ALL NOTES. FAILURE ON THE PART OF THE CONTRACTOR TO FAMILIARIZE HIMSELF WITH THE DESIGNATED STANDARDS AND SPECIFICATIONS PERTAINING TO THIS WORK SHALL IN NO WAY RELIEVE THE CONTRACTOR OF HIS RESPONSIBILITY FOR PERFORMING THE WORK IN ACCORDANCE WITH ALL SUCH STANDARDS AND SPECIFICATIONS. IF UNFORESEEN PROBLEMS OR CONFLICTS ARE ENCOUNTERED DURING CONSTRUCTION, FOR WHICH AN IMMEDIATE SOLUTION IS NOT APPARENT, THE ENGINEER AND OWNER SHALL BE NOTED IMMEDIATELY.

4. THE OWNERS ENGINEER WILL PERFORM CERTAIN CONSTRUCTION STAKING. REFERENCE THE CONSTRUCTION DOCUMENTS, WHICH OUTLINE THE SCOPE OF THIS SERVICE.

5. THE LOCATIONS OF EXISTING UNDERGROUND UTILITIES ARE SHOWN IN AN APPROXIMATE WAY ONLY AND HAVE NOT BEEN INDEPENDENTLY VERIFIED BY THE OWNER OR ITS REPRESENTATIVE. THE CONTRACTOR SHALL DETERMINE THE EXACT LOCATION OF ALL EXISTING UTILITIES BEFORE COMMENCING WORK, AND AGREES TO BE FULLY RESPONSIBLE FOR ANY AND ALL DAMAGES WHICH MIGHT BE OCCASIONED BY THE CONTRACTOR'S FAILURE TO EXACTLY LOCATE AND PRESERVE ANY AND ALL UNDERGROUND UTILITIES.

6. IT WILL BE THE RESPONSIBILITY OF EACH CONTRACTOR TO PROTECT ALL EXISTING PUBLIC AND PRIVATE UTILITIES THROUGHOUT THE CONSTRUCTION OF THIS PROJECT. THE CONTRACTOR SHALL BRACE AND SUPPORT EXISTING UTILITIES AND UTILITY POLES TO PREVENT DAMAGE TO SAID UTILITIES. CONTRACTOR SHALL CONTACT THE APPROPRIATE UTILITY COMPANIES FOR LINE LOCATIONS AT LEAST 48 HOURS PRIOR TO COMMENCEMENT OF CONSTRUCTION AND SHALL ASSUME FULL LIABILITY TO THOSE COMPANIES FOR ANY DAMAGES CAUSED TO THEIR FACILITIES. THE FOLLOWING IS A LIST OF UTILITY CONTACTS:

CITY OF CELINA,	(972) 382-2682
GTE TELECOMMUNICATIONS	(800) 344-8377
TXU (LONE STAR GAS)	(800) 617-8090
CO-SERV	(940) 321-4640
UPPER TRINITY REGIONAL WATER DISTRICT	(972) 219-1228
GCEC	(903) 482-7100

7. ALL CONTRACTORS MUST CONFINE THEIR ACTIVITIES TO THE WORK AREA. NO ENCROACHMENTS ON TO ADJACENT DEVELOPED OR UNDEVELOPED PROPERTY AREAS WILL BE ALLOWED UNLESS SPECIFIED IN THE PLANS. ANY DAMAGE RESULTING THEREFROM SHALL BE THE CONTRACTOR'S RESPONSIBILITY TO REPAIR.

8. OTHER CONSTRUCTION MAY BE UNDERWAY AT THE SAME TIME AND IN THE GENERAL AREA OF THE SUBJECT PROJECT. IT SHALL BE THE RESPONSIBILITY OF THE CONTRACTOR TO NOTIFY AND COORDINATE WITH OTHER CONTRACTORS TO DETERMINE A CONSTRUCTION SCHEDULE THAT WILL OFFER THE LEAST HINDRANCE TO ALL INVOLVED. THE OWNER'S ENGINEER WILL BE NOTIFIED OF ALL COORDINATION. IN THE EVENT OF A SCHEDULING CONFLICT THE OWNER'S ENGINEER SHALL BE NOTIFIED IMMEDIATELY.

9. CONSTRUCTION INSPECTION WILL BE PERFORMED BY REPRESENTATIVES OF THE OWNER, ENGINEER, GEOTECHNICAL ENGINEER, AND REVIEWING AUTHORITIES AND AGENCIES. UNRESTRICTED ACCESS SHALL BE PROVIDED TO THEM AT ALL TIMES. CONTRACTOR IS RESPONSIBLE FOR UNDERSTANDING AND SCHEDULING REQUIRED INSPECTIONS.

10. THE CONTRACTOR SHALL BE REQUIRED TO PROVIDE AND MAINTAIN ALL NECESSARY WARNING AND SAFETY DEVICES (FLASHING LIGHTS, BARRICADES, SIGNS, ETC., IN CONFORMANCE WITH THE TEXAS MANUAL ON UNIFORM TRAFFIC CONTROL, LATEST EDITION) TO PROTECT PUBLIC SAFETY AND HEALTH UNTIL THE WORK HAS BEEN COMPLETED AND ACCEPTED BY THE DISTRICT.

11. THE CONTRACTOR SHALL INSTALL SILT FENCING ON THE DOWNSLOPE SIDE OF ALL UTILITY EASEMENTS 48 HOURS PRIOR TO NEW PIPELINE CONSTRUCTION. CONTRACTOR SHALL MAINTAIN SAID SILT FENCING UNTIL SUFFICIENT GROUND COVER OVER THE DISTURBED AREAS HAS BEEN ESTABLISHED.

SANITARY SEWER NOTES

1. ASPHALT PAVEMENT AND CONCRETE PAVED DRIVEWAYS THAT ARE DAMAGED DURING THE CONSTRUCTION PROCESS SHALL BE REMOVED AND REPLACED TO RETURN THE ROADWAY AND DRIVEWAYS TO A CONDITION THAT IS LIKE OR BETTER THAN THE CONDITIONS PRIOR TO THE COMMENCEMENT OF CONSTRUCTION.

2. DAMAGED PAVEMENT SHALL BE SAWCUT AND REMOVED FROM THE SITE. DISPOSAL OF SAME SHALL BE IN ACCORDANCE WITH TxDOT AND TCEQ REGULATIONS.

3. AFTER PIPES, STRUCTURES AND OTHER APPURTENANCES HAVE BEEN INSTALLED, THE TRENCH OR OPENING SHALL BE BACKFILLED WITH MATERIAL FREE FROM LARGE STONES OR CLODS AND OF A QUALITY ACCEPTABLE TO THE ENGINEER.

4. BACKFILL BENEATH THE HAUNCHES OF THE PIPE AND TO A POINT TWELVE INCHES ABOVE THE TOP OF THE PIPE SHALL BE PLACED IN SIX INCH LAYERS COMPACTED TO 95 PERCENT OF MAXIMUM DENSITY WITH HAND AND MECHANICAL TAMPERS SUITABLE FOR THIS PURPOSE.

5. IN AREAS WHERE PAVEMENT IS TO BE CONSTRUCTED OVER THE PIPE, THE REMAINDER OF THE TRENCH BACKFILL SHALL BE PLACED IN SIX-INCH LAYERS (COMPACTED THICKNESS) AND SHALL BE COMPACTED TO 100 PERCENT OF MAXIMUM DENSITY AS DETERMINE BY AASHTO T-99. CONTRACTOR WILL BE RESPONSIBLE FOR CORRECTING SETTLEMENT IN ALL BACKFILLED AREAS WHETHER UNDER THE PAVEMENT OR OTHERWISE.

6. IN AREAS WHERE NO PAVEMENT IS TO BE CONSTRUCTED, THE BACKFILL ABOVE THE PIPE SHALL BE COMPACTED TO A FIRMNESS APPROXIMATELY EQUAL TO THAT OF THE SOIL ADJACENT TO THE PIPE TRENCH OR 95 PERCENT OF MAXIMUM DENSITY, WHICHEVER IS GREATER.

NOTES FOR THE PRESERVATION OF EXISTING UTILITIES, TREES, AND ABOVE GROUND FEATURES

1. THE CONTRACTOR SHALL NOT DAMAGE OR REMOVE ANY TREES UNLESS AUTHORIZED BY THE CONSTRUCTION ENGINEER.

2. ALL TREE TRIMMING SHALL BE DONE BY A FIRM SPECIALIZING IN THAT KIND OF WORK. TRIMMING SHALL BE SENSITIVE TO LONG TERM SURVIVAL OF THE TREE AND MAINTAINING AN AESTHETIC CANOPY SHAPE.

3. UNLESS OTHERWISE NOTED, ALL EXISTING SURFACE AND ABOVE GROUND FEATURES, INCLUDING, BUT NOT LIMITED TO, WATER METERS, FIRE HYDRANTS, FENCES, MAILBOXES, LIGHT POLES, PAVEMENT, AND RETAINING WALLS THAT ARE DAMAGED OR REMOVED SHALL BE REPLACED BY THE CONTRACTOR AT HIS EXPENSE.

4. ALL BARRICADES, WARNING SIGNS AND TRAFFIC CONTROL DEVICES SHALL BE IN ACCORDANCE WITH THE STANDARDS OF THE TEXAS MANUAL OF UNIFORM TRAFFIC CONTROL DEVICES.

5. PRIVATE ACCESS SHALL BE MAINTAINED DURING ALL NON-CONSTRUCTION PERIODS. CLOSURES DURING CONSTRUCTION SHALL BE COORDINATED WITH PROPERTY OWNERS THROUGH THE GENERAL CONTRACTOR.

6. CONTRACTOR SHALL NOT BE CLOSER THAN 15 FEET OF ANY ELECTRIC TRANSMISSION TOWERS OR POWER POLES WITHOUT PRIOR WRITTEN APPROVAL FROM THE ELECTRIC COMPANY.

7. A MINIMUM OF TWENTY FEET CLEARANCE TO ALL HIGH VOLTAGE TRANSMISSION LINES MUST BE MAINTAINED AT ALL TIMES.

8. UPON COMPLETION OF CONSTRUCTION, ALL AFFECTED TURF AREAS SHALL BE AERATED AS NEEDED, TOP DRESSED WITH A GOOD SOIL MIXTURE AND REPLANTED WITH BERMUDA GRASS.

9. INSTALL PROTECTIVE FENCING AROUND OPEN DITCHES AND CONSTRUCTION EQUIPMENT AT THE END OF EACH DAY.

CITY OF CELINA, TEXAS
APPROVED FOR CONSTRUCTION
DATE: 10/20/03
BY: P.A.C.

10/16/03
STATE OF TEXAS
OCIE LEE VEST
80062
REGISTERED PROFESSIONAL ENGINEER

NO.	DATE	REVISIONS	APPROVED

CARTER RANCH

GENERAL NOTES

OFFSITE WASTEWATER & LIFT STATION NO. 2

CENTURION AMERICAN DEVELOPMENT GROUP

CELINA, TEXAS

HUITT-ZOLLARS
Huitt-Zollars, Inc. Dallas
3131 McKinney Avenue, Suite 600
Dallas, Texas 75204-2489
Phone (214) 871-3311 Fax (214) 871-0757

DESIGN	DRAWN	DATE	SCALE	NOTES	FILE	NO.
HZI	HZI	OCT. 2003	H.1"=40' V.1"=5'		01312223	2/20

SS-200310-01

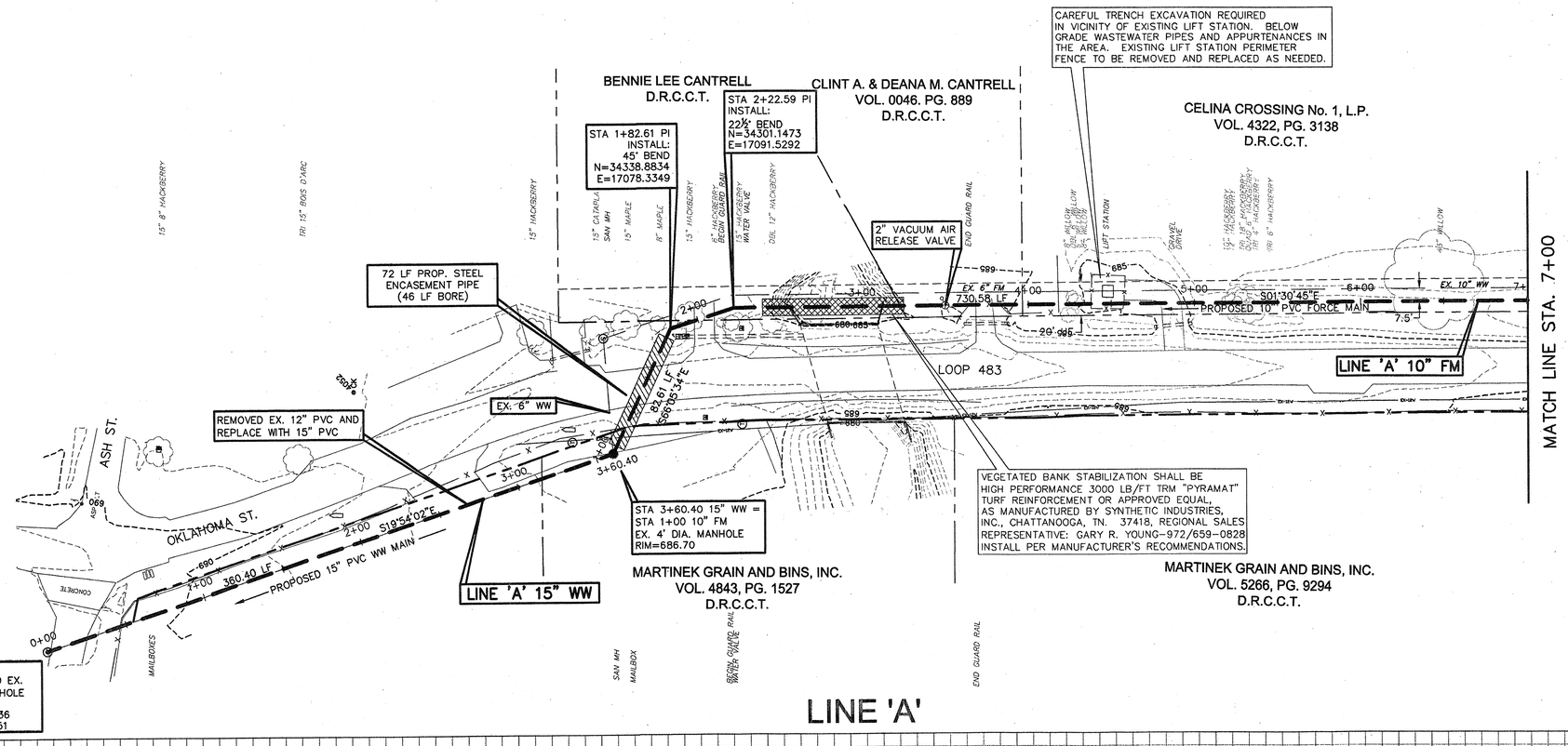

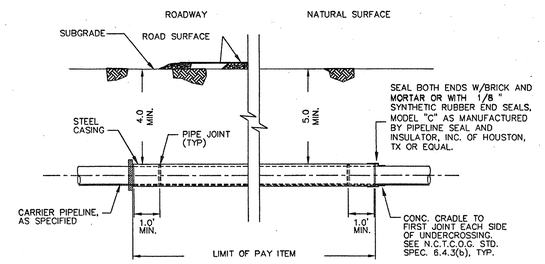

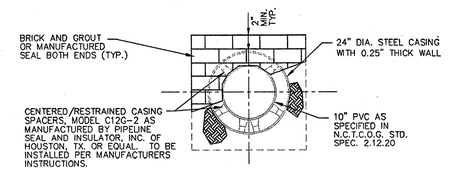

UNDERCROSSING BY OTHER THAN OPEN CUT

N.T.S.

LINE 'A'

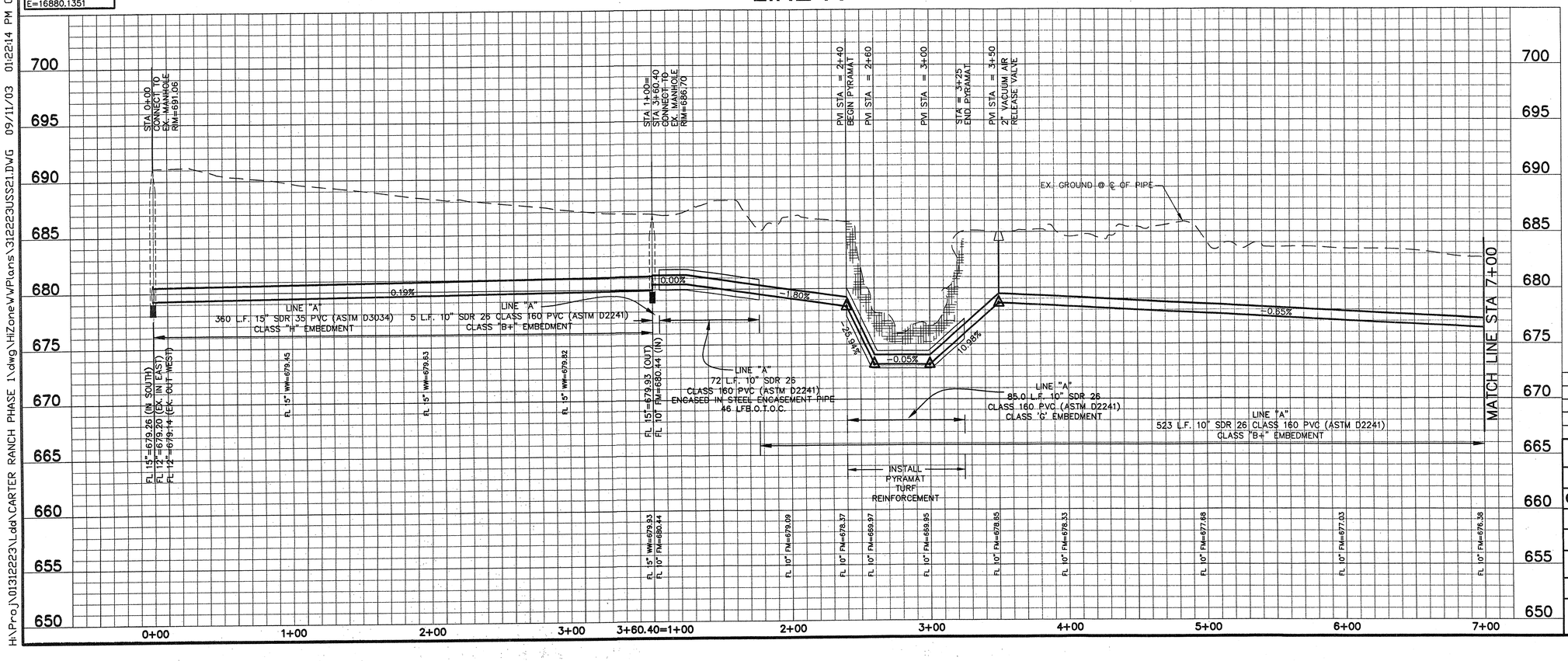

BENCHMARKS:

CONTROL MONUMENT No. 3 – CONCRETE MONUMENT WITH 5/8 INCH IRON ROD WITH CAP STAMPED "HUITT-ZOLLARS" AT THE NORTHEAST CORNER OF THE INTERSECTION OF STATE HIGHWAY 289 AND COUNTY ROAD 83. LOCATED APPROXIMATELY 60 FEET NORTH OF THE CENTERLINE OF COUNTY ROAD 83 AND 115 FEET EAST OF THE CENTERLINE OF STATE HIGHWAY 289.
ELEVATION 681.67 FEET

CONTROL MONUMENT No. 5 – CONCRETE MONUMENT WITH 5/8 INCH IRON RODWITH CAP STAMPED "HUITT-ZOLLARS" AT THE SOUTHEAST CORNER OF THE INTERSECTION OF STATE HIGHWAY 289 AND COUNTY ROAD 88. LOCATED APPROXIMATELY 45 FEET SOUTH OF THE CENTERLINE OF COUNTY ROAD 88 AND 112 FEET EAST OF THE CENTERLINE OF STATE HIGHWAY 289.
ELEVATION 681.76 FEET

CITY OF CELINA, TEXAS
APPROVED FOR CONSTRUCTION
DATE: 10/20/03
BY: P.A.C.

10/16/03
STATE OF TEXAS
OCIE LEE VEST
80062
REGISTERED
PROFESSIONAL ENGINEER

NO.	DATE	REVISIONS	APPROVED

CARTER RANCH

STA 0+00 TO 360.40 = STA 1+00 TO STA 7+00

OFFSITE WASTEWATER & LIFT STATION NO. 2

CENTURION AMERICAN DEVELOPMENT GROUP

CELINA, TEXAS

HUITT-ZOLLARS

Huitt-Zollars, Inc. Dallas
3131 McKinney Avenue, Suite 600
Dallas, Texas 75204-2489
Phone (214) 871-3311 Fax (214) 871-0757

DESIGN	DRAWN	DATE	SCALE	NOTES	FILE	NO.
HZI	HZI	OCT. 2003	H.1"=40' V.1"=5'		01312223	3/20

H:\Proj\01312223\Ldd\CARTER RANCH PHASE 1\dwg\HiZone\WWPlans\312223USS21.DWG 09/11/03 01:22:14 PM CDT

SS-200310-01

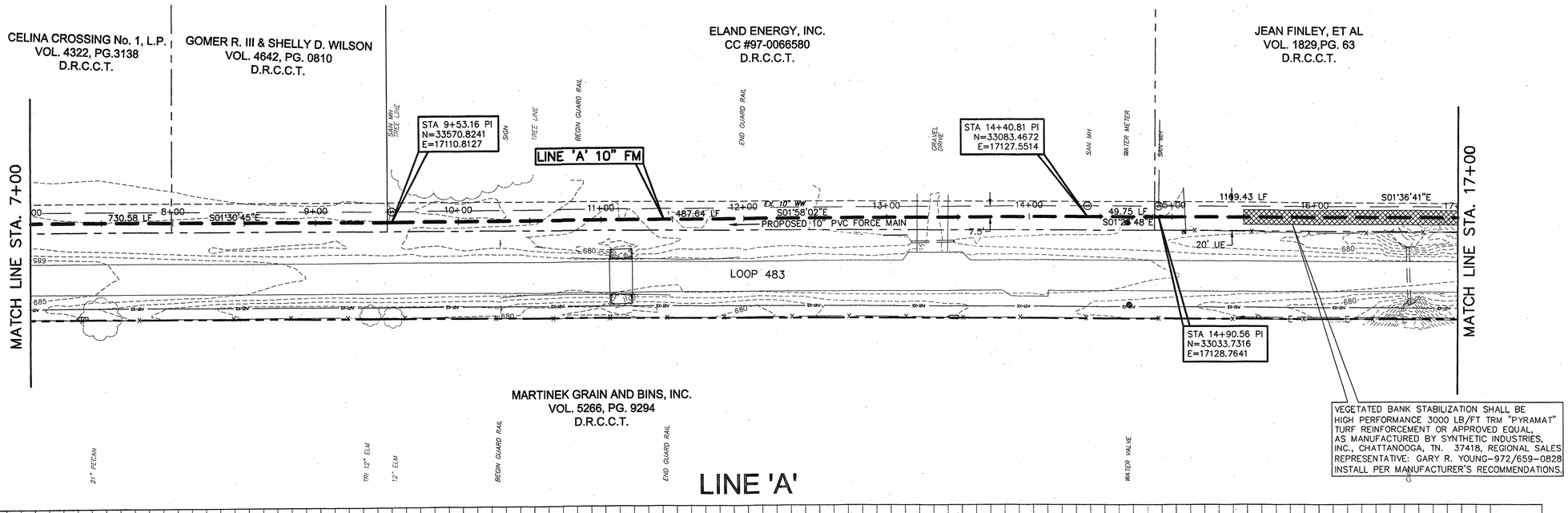

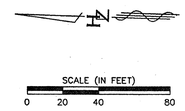

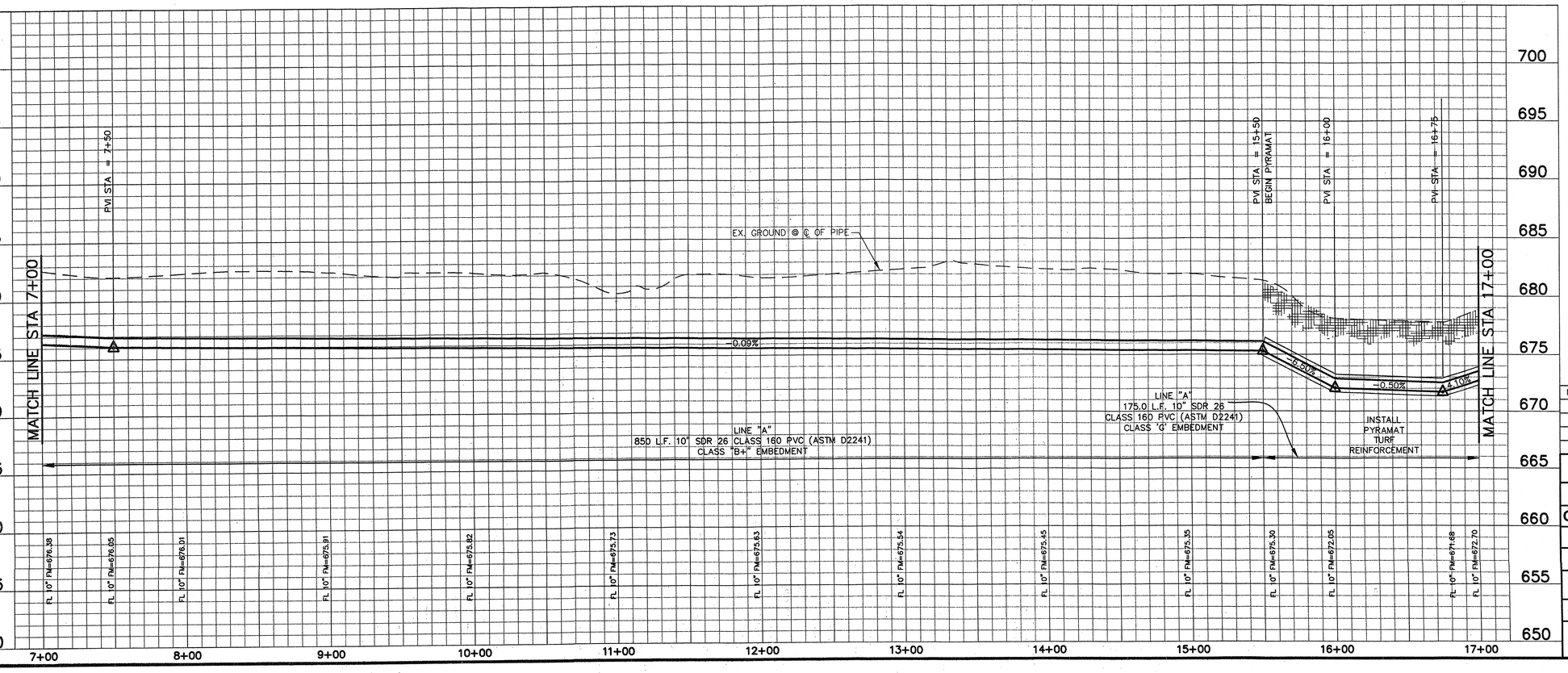

BENCHMARKS:

CONTROL MONUMENT No. 3 – CONCRETE MONUMENT WITH 5/8 INCH IRON ROD WITH CAP STAMPED "HUITT-ZOLLARS" AT THE NORTHEAST CORNER OF THE INTERSECTION OF STATE HIGHWAY 289 AND COUNTY ROAD 83. LOCATED APPROXIMATELY 60 FEET NORTH OF THE CENTERLINE OF COUNTY ROAD 83 AND 115 FEET EAST OF THE CENTERLINE OF STATE HIGHWAY 289.
ELEVATION 681.67 FEET

CONTROL MONUMENT No. 5 – CONCRETE MONUMENT WITH 5/8 INCH IRON RODWITH CAP STAMPED "HUITT-ZOLLARS" AT THE SOUTHEAST CORNER OF THE INTERSECTION OF STATE HIGHWAY 289 AND COUNTY ROAD 88. LOCATED APPROXIMATELY 45 FEET SOUTH OF THE CENTERLINE OF COUNTY ROAD 88 AND 112 FEET EAST OF THE CENTERLINE OF STATE HIGHWAY 289.
ELEVATION 681.76 FEET

10/16/03

CITY OF CELINA, TEXAS
APPROVED FOR CONSTRUCTION
DATE: 10/20/03
BY: P.A.C.

STATE OF TEXAS
OCIE LEE VEST
80062
REGISTERED
PROFESSIONAL ENGINEER

NO.	DATE	REVISIONS	APPROVED

CARTER RANCH

STA 7+00 - 17+00

OFFSITE WASTEWATER & LIFT STATION NO. 2

CENTURION AMERICAN DEVELOPMENT GROUP

CELINA, TEXAS

HUITT-ZOLLARS

Huitt-Zollars, Inc. Dallas
331 McKinney Avenue, Suite 600
Dallas, Texas 75204-2459
Phone (214) 871-3311 Fax (214) 871-0757

DESIGN	DRAWN	DATE	SCALE	NOTES	FILE	NO.
HZI	HZI	OCT. 2003	H.1"=40' V.1"=5'		01312223	4/20

H:\Proj\01312223\Ldd\CARTER RANCH PHASE 1\dwg\HIZone\WPlans\31223USS22.DWG 09/11/03 01:18:30 PM CDT

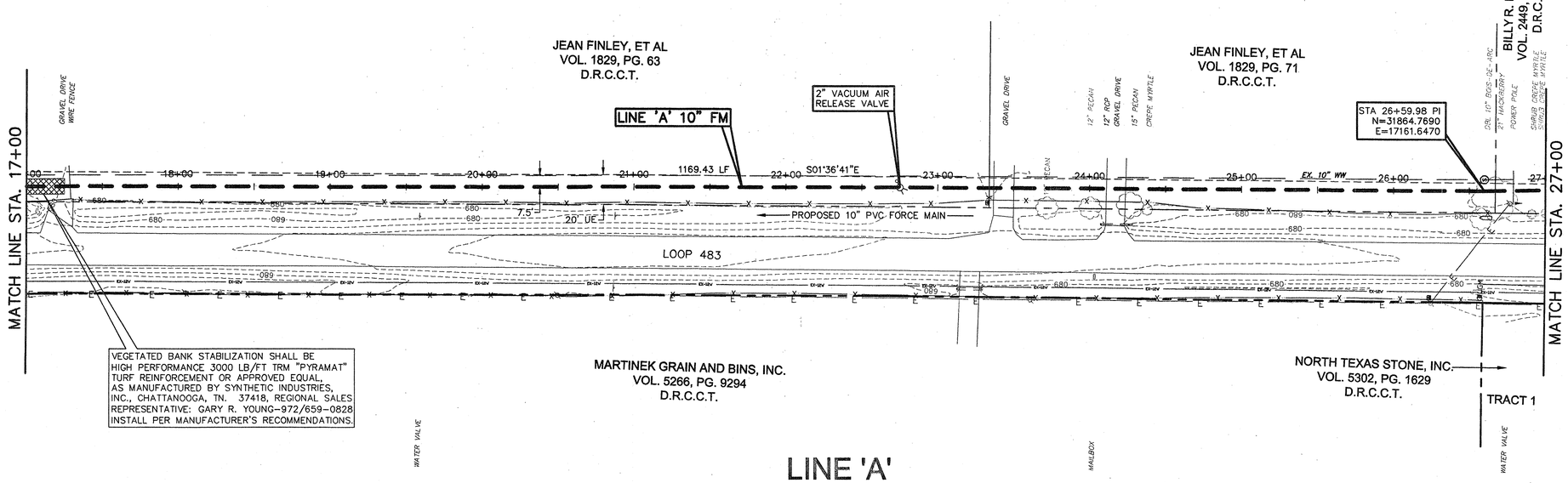

LINE 'A'

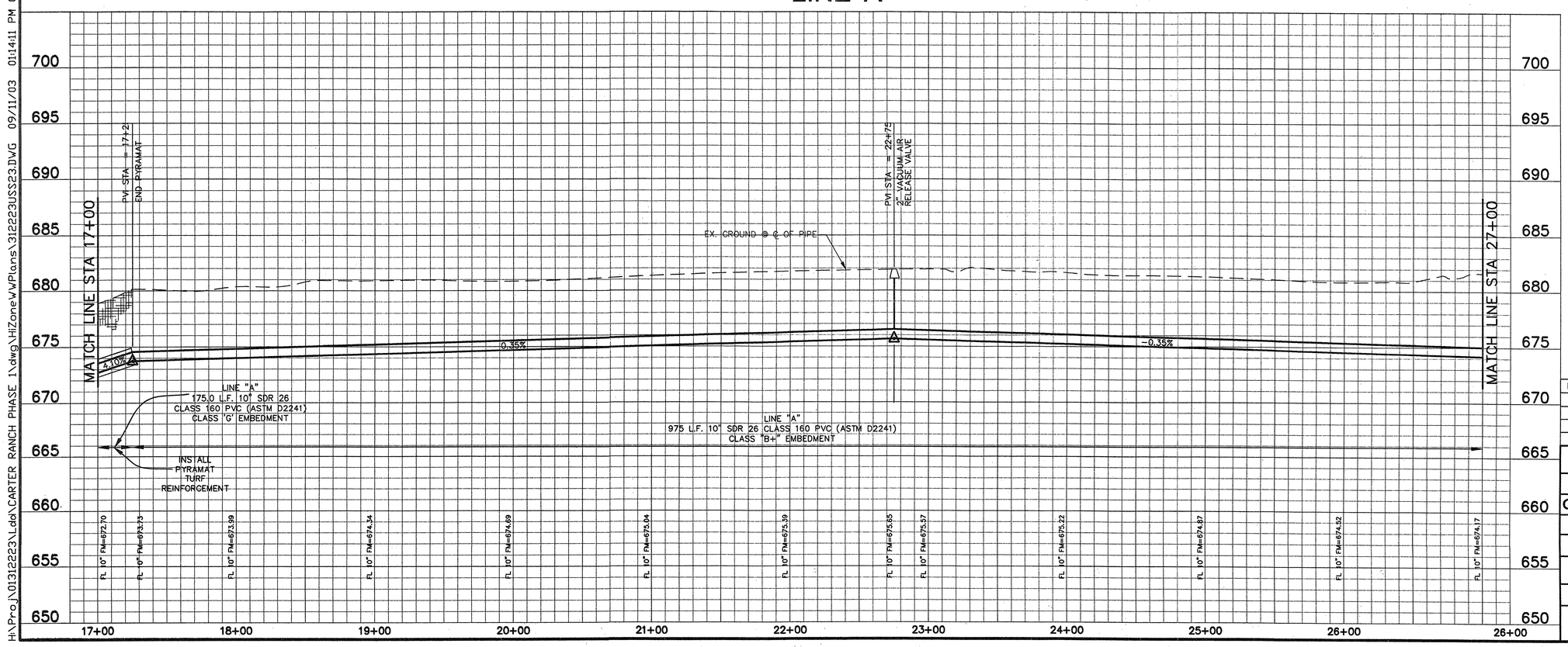

SCALE (IN FEET)
0 20 40 80

BENCHMARKS:

CONTROL MONUMENT No. 3 – CONCRETE MONUMENT WITH 5/8 INCH IRON ROD WITH CAP STAMPED "HUITT-ZOLLARS" AT THE NORTHEAST CORNER OF THE INTERSECTION OF STATE HIGHWAY 289 AND COUNTY ROAD 83. LOCATED APPROXIMATELY 60 FEET NORTH OF THE CENTERLINE OF COUNTY ROAD 83 AND 115 FEET EAST OF THE CENTERLINE OF STATE HIGHWAY 289.
ELEVATION 681.67 FEET

CONTROL MONUMENT No. 5 – CONCRETE MONUMENT WITH 5/8 INCH IRON RODWITH CAP STAMPED "HUITT-ZOLLARS" AT THE SOUTHEAST CORNER OF THE INTERSECTION OF STATE HIGHWAY 289 AND COUNTY ROAD 88. LOCATED APPROXIMATELY 45 FEET SOUTH OF THE CENTERLINE OF COUNTY ROAD 88 AND 112 FEET EAST OF THE CENTERLINE OF STATE HIGHWAY 289.
ELEVATION 681.76 FEET

10/16/03

STATE OF TEXAS
OCIE LEE VEST
80062
REGISTERED PROFESSIONAL ENGINEER

CITY OF CELINA, TEXAS
APPROVED FOR CONSTRUCTION
DATE: 10/20/03
BY: D.A.C.

NO.	DATE	REVISIONS	APPROVED

CARTER RANCH

STA 17+00 - 27+00

OFFSITE WASTEWATER & LIFT STATION NO. 2

CENTURION AMERICAN DEVELOPMENT GROUP

CELINA, TEXAS

HUITT-ZOLLARS

Huitt-Zollars, Inc.
3131 McKinney Avenue, Suite 600
Dallas, Texas 75204-2489
Phone (214) 871-3311
Dallas
Fax (214) 871-0757

DESIGN	DRAWN	DATE	SCALE	NOTES	FILE	NO.
HZI	HZI	OCT. 2003	H.1"=40' V.1"=5'		01312223	5/20

H:\Proj\01312223\Ldd\CARTER RANCH PHASE 1\dwg\HiZone\WPlans\312223US23.DWG 09/11/03 01:14:11 PM CDT

SS-200310-01

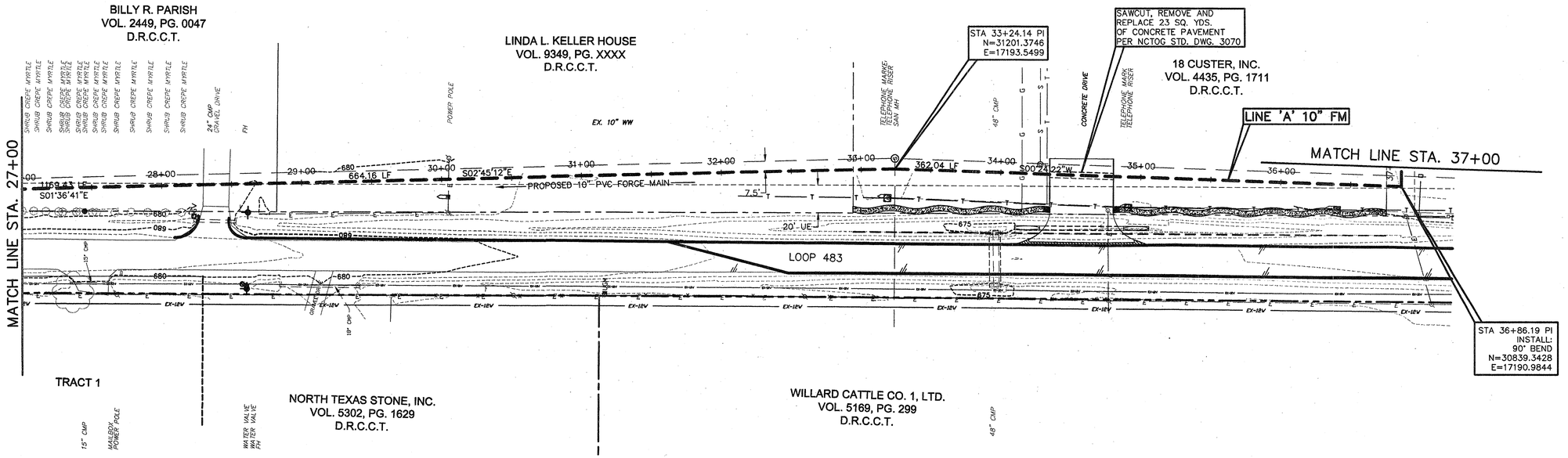

LINE 'A'

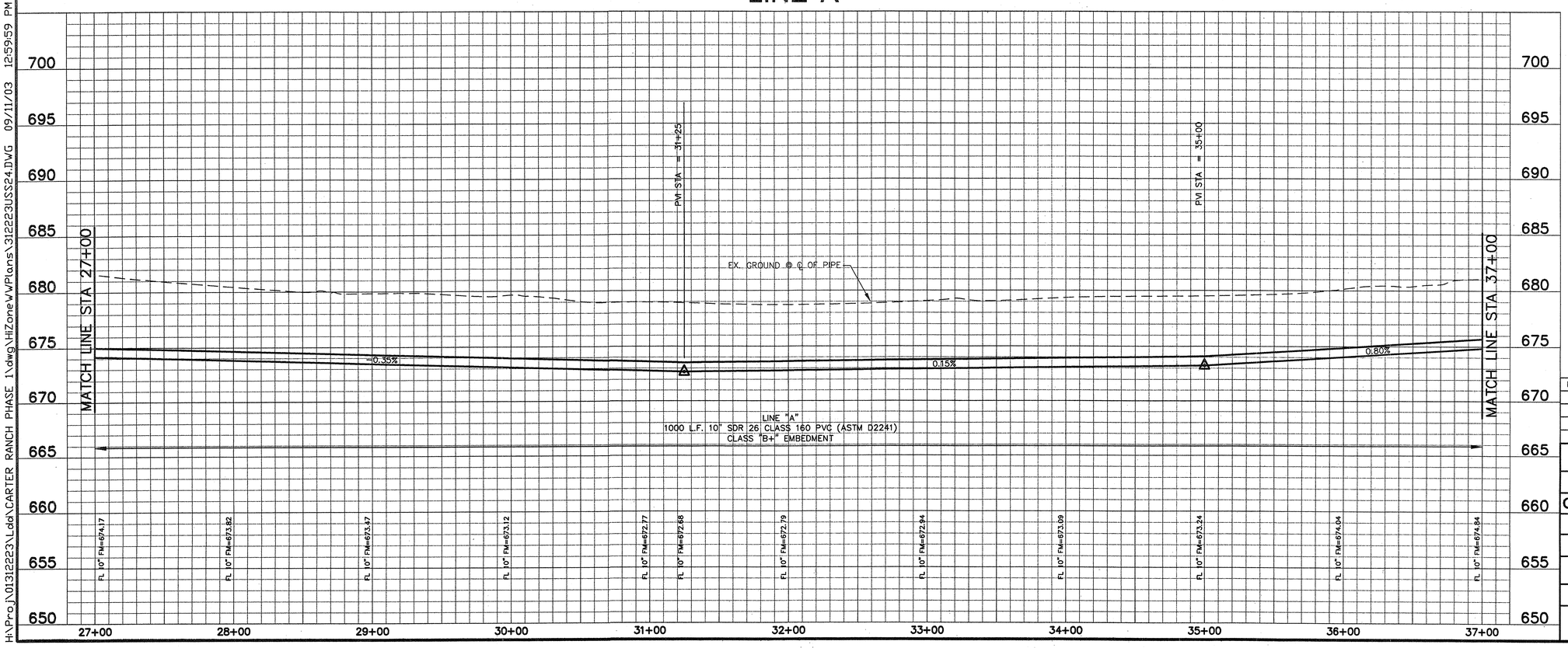

BENCHMARKS:

CONTROL MONUMENT No. 3 – CONCRETE MONUMENT WITH 5/8 INCH IRON ROD WITH CAP STAMPED "HUITT-ZOLLARS" AT THE NORTHEAST CORNER OF THE INTERSECTION OF STATE HIGHWAY 289 AND COUNTY ROAD 83. LOCATED APPROXIMATELY 60 FEET NORTH OF THE CENTERLINE OF COUNTY ROAD 83 AND 115 FEET EAST OF THE CENTERLINE OF STATE HIGHWAY 289.
ELEVATION 681.67 FEET

CONTROL MONUMENT No. 5 – CONCRETE MONUMENT WITH 5/8 INCH IRON RODWITH CAP STAMPED "HUITT-ZOLLARS" AT THE SOUTHEAST CORNER OF THE INTERSECTION OF STATE HIGHWAY 289 AND COUNTY ROAD 88. LOCATED APPROXIMATELY 45 FEET SOUTH OF THE CENTERLINE OF COUNTY ROAD 88 AND 112 FEET EAST OF THE CENTERLINE OF STATE HIGHWAY 289.
ELEVATION 681.76 FEET

CITY OF CELINA, TEXAS
APPROVED FOR CONSTRUCTION
DATE: 10/20/03
BY: P.A.C.

10/16/03
STATE OF TEXAS
OCIE LEE VEST
80062
REGISTERED PROFESSIONAL ENGINEER

NO.	DATE	REVISIONS	APPROVED

CARTER RANCH

STA 27+00 - 37+00

OFFSITE WASTEWATER & LIFT STATION NO. 2

CENTURION AMERICAN DEVELOPMENT GROUP

CELINA, TEXAS

HUITT-ZOLLARS

Huitt-Zollars, Inc.
3131 McKinney Avenue, Suite 600
Dallas, Texas 75204-2489
Phone (214) 871-3311
Fax (214) 871-0757
Dallas

DESIGN	DRAWN	DATE	SCALE	NOTES	FILE	NO.
HZI	HZI	OCT. 2003	H.1"=40' V.1"=5'		01312223	6/20

H:\Proj\01312223\Ldd\CARTER RANCH PHASE 1.dwg\HIZone\WPlans\312223USS24.DWG 09/11/03 12:59:59 PM CDT

SS-200310-01

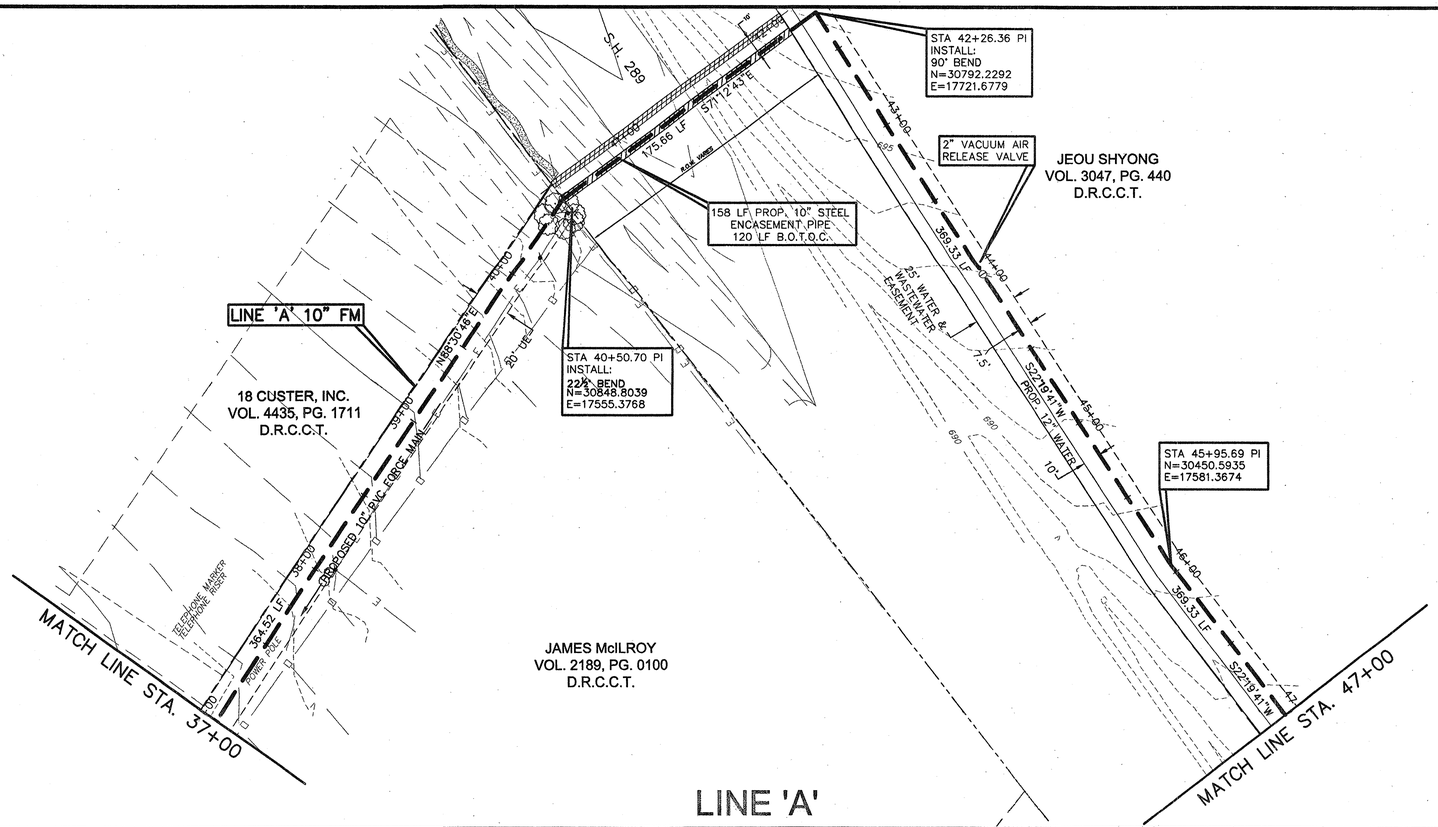

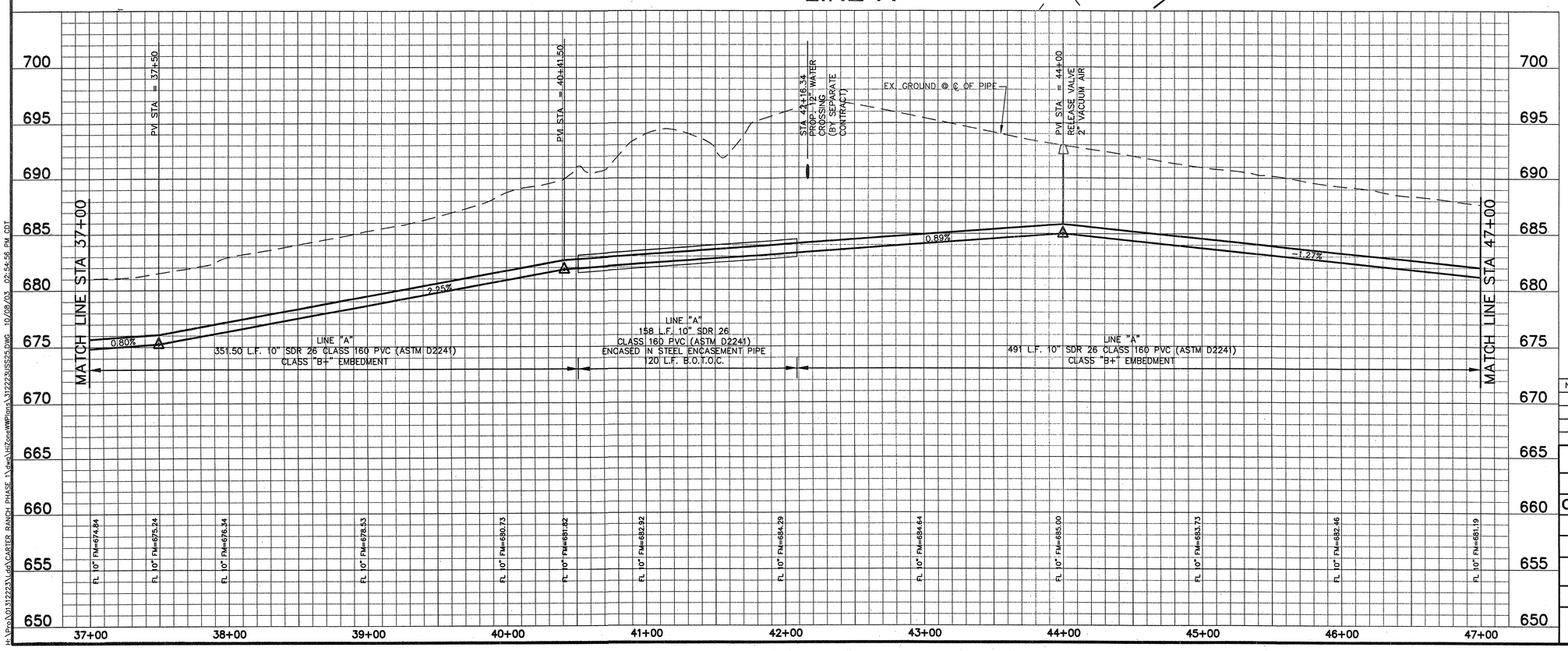

BENCHMARKS:

CONTROL MONUMENT No. 3 – CONCRETE MONUMENT WITH 5/8 INCH IRON ROD WITH CAP STAMPED "HUITT-ZOLLARS" AT THE NORTHEAST CORNER OF THE INTERSECTION OF STATE HIGHWAY 289 AND COUNTY ROAD 83. LOCATED APPROXIMATELY 60 FEET NORTH OF THE CENTERLINE OF COUNTY ROAD 83 AND 115 FEET EAST OF THE CENTERLINE OF STATE HIGHWAY 289.
ELEVATION 681.67 FEET

CONTROL MONUMENT No. 5 – CONCRETE MONUMENT WITH 5/8 INCH IRON RODWITH CAP STAMPED "HUITT-ZOLLARS" AT THE SOUTHEAST CORNER OF THE INTERSECTION OF STATE HIGHWAY 289 AND COUNTY ROAD 88. LOCATED APPROXIMATELY 45 FEET SOUTH OF THE CENTERLINE OF COUNTY ROAD 88 AND 112 FEET EAST OF THE CENTERLINE OF STATE HIGHWAY 289.
ELEVATION 681.76 FEET

CITY OF CELINA, TEXAS
APPROVED FOR CONSTRUCTION
DATE: 10/20/03
BY: P.A.L.

10/16/03
STATE OF TEXAS
OCIE LEE VEST
80062
REGISTERED PROFESSIONAL ENGINEER

NO.	DATE	REVISIONS	APPROVED

CARTER RANCH

STA 37+00 - 47+00

OFFSITE WASTEWATER & LIFT STATION NO. 2

CENTURION AMERICAN DEVELOPMENT GROUP

CELINA, TEXAS

HUITT-ZOLLARS

Huitt-Zollars, Inc.
3131 McKinney Avenue, Suite 600
Dallas, Texas 75204-2489
Phone (214) 871-3311 Fax (214) 871-0757
Dallas

DESIGN	DRAWN	DATE	SCALE	NOTES	FILE	NO.
HZI	HZI	OCT. 2003	H.1"=40' V.1"=5'		01312223	7/20

H:\Proj\01312223\Cdd\CARTER RANCH PHASE 1\dwg\HIZone\WWPlans\312223US25.DWG 10/08/03 02:54:56 PM CDT

SS-200310-01

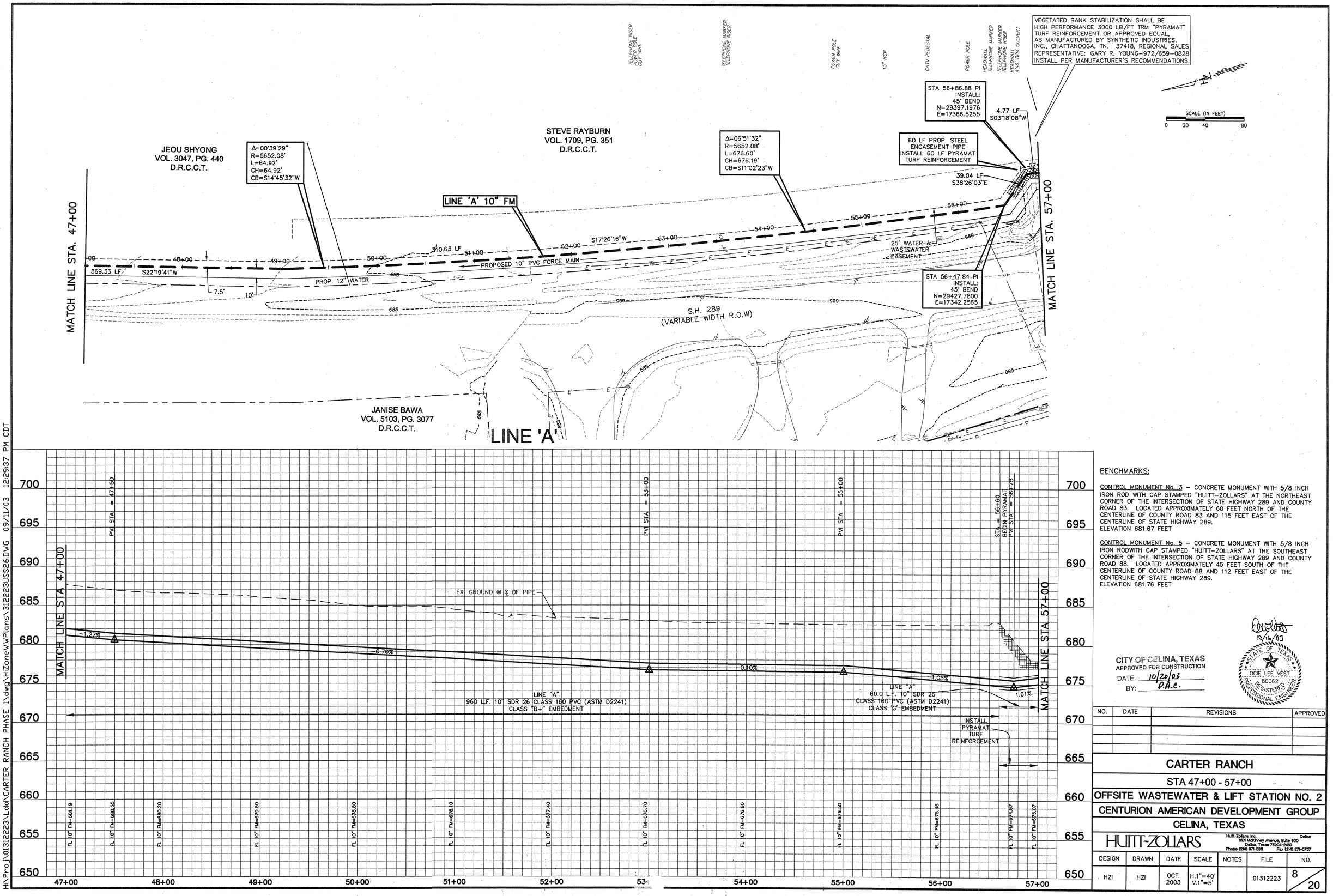

BENCHMARKS:

CONTROL MONUMENT No. 3 – CONCRETE MONUMENT WITH 5/8 INCH IRON ROD WITH CAP STAMPED "HUITT-ZOLLARS" AT THE NORTHEAST CORNER OF THE INTERSECTION OF STATE HIGHWAY 289 AND COUNTY ROAD 83. LOCATED APPROXIMATELY 60 FEET NORTH OF THE CENTERLINE OF COUNTY ROAD 83 AND 115 FEET EAST OF THE CENTERLINE OF STATE HIGHWAY 289.
ELEVATION 681.67 FEET

CONTROL MONUMENT No. 5 – CONCRETE MONUMENT WITH 5/8 INCH IRON RODWITH CAP STAMPED "HUITT-ZOLLARS" AT THE SOUTHEAST CORNER OF THE INTERSECTION OF STATE HIGHWAY 289 AND COUNTY ROAD 88. LOCATED APPROXIMATELY 45 FEET SOUTH OF THE CENTERLINE OF COUNTY ROAD 88 AND 112 FEET EAST OF THE CENTERLINE OF STATE HIGHWAY 289.
ELEVATION 681.76 FEET

CITY OF CELINA, TEXAS
APPROVED FOR CONSTRUCTION
DATE: 10/20/03
BY: P.A.C.

10/16/03
STATE OF TEXAS
OCIE LEE VEST
80062
REGISTERED PROFESSIONAL ENGINEER

NO.	DATE	REVISIONS	APPROVED

CARTER RANCH

STA 47+00 - 57+00

OFFSITE WASTEWATER & LIFT STATION NO. 2

CENTURION AMERICAN DEVELOPMENT GROUP

CELINA, TEXAS

HUITT-ZOLLARS
Huitt-Zollars, Inc. Dallas
3131 McKinney Avenue, Suite 600
Dallas, Texas 75204-2489
Phone (214) 871-3311 Fax (214) 871-0757

DESIGN	DRAWN	DATE	SCALE	NOTES	FILE	NO.
HZI	HZI	OCT. 2003	H.1"=40' V.1"=5'		01312223	8/20

SS-200310-01

H:\Proj\01312223\Ld\CARTER RANCH PHASE 1\dwg\HZone\WPlans\312223USS26.DWG 09/11/03 12:29:37 PM CDT

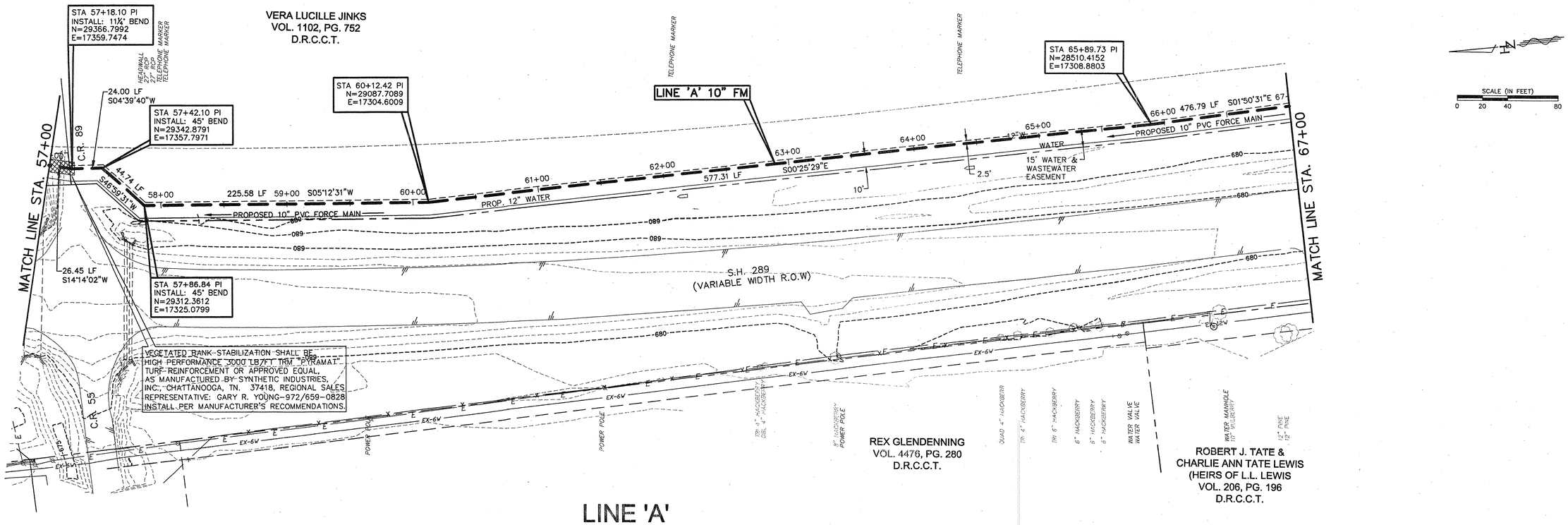

LINE 'A'

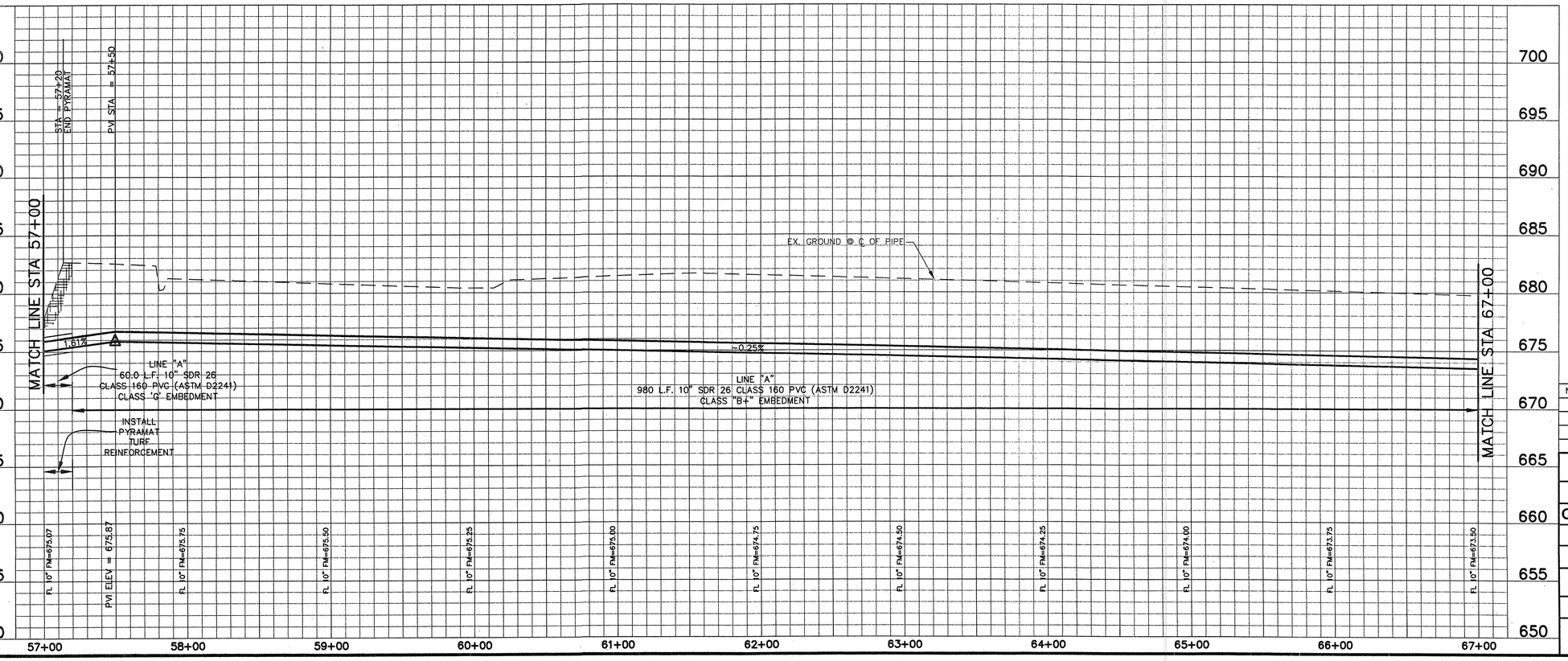

BENCHMARKS:

CONTROL MONUMENT No. 3 – CONCRETE MONUMENT WITH 5/8 INCH IRON ROD WITH CAP STAMPED "HUITT-ZOLLARS" AT THE NORTHEAST CORNER OF THE INTERSECTION OF STATE HIGHWAY 289 AND COUNTY ROAD 83. LOCATED APPROXIMATELY 60 FEET NORTH OF THE CENTERLINE OF COUNTY ROAD 83 AND 115 FEET EAST OF THE CENTERLINE OF STATE HIGHWAY 289.
ELEVATION 681.67 FEET

CONTROL MONUMENT No. 5 – CONCRETE MONUMENT WITH 5/8 INCH IRON RODWITH CAP STAMPED "HUITT-ZOLLARS" AT THE SOUTHEAST CORNER OF THE INTERSECTION OF STATE HIGHWAY 289 AND COUNTY ROAD 88. LOCATED APPROXIMATELY 45 FEET SOUTH OF THE CENTERLINE OF COUNTY ROAD 88 AND 112 FEET EAST OF THE CENTERLINE OF STATE HIGHWAY 289.
ELEVATION 681.76 FEET

10/16/03

STATE OF TEXAS
OCIE LEE VEST
80062
REGISTERED
PROFESSIONAL ENGINEER

CITY OF CELINA, TEXAS
APPROVED FOR CONSTRUCTION
DATE: 10/20/03
BY: P.A.C.

NO.	DATE	REVISIONS	APPROVED

CARTER RANCH

STA 57+00 - 67+00

OFFSITE WASTEWATER & LIFT STATION NO. 2

CENTURION AMERICAN DEVELOPMENT GROUP

CELINA, TEXAS

HUITT-ZOLLARS

Huitt-Zollars, Inc. Dallas
3131 McKinney Avenue, Suite 600
Dallas, Texas 75204-2489
Phone (214) 871-3311 Fax (214) 871-0757

DESIGN	DRAWN	DATE	SCALE	NOTES	FILE	NO.
HZI	HZI	OCT. 2003	H.1"=40' V.1"=5'		01312223	9/20

SS-200310-01

H:\Proj\01312223\Ldd\CARTER RANCH PHASE 1\dwg\HZone\WPlans\312223USS27.DWG 09/11/03 12:15:25 PM CDT

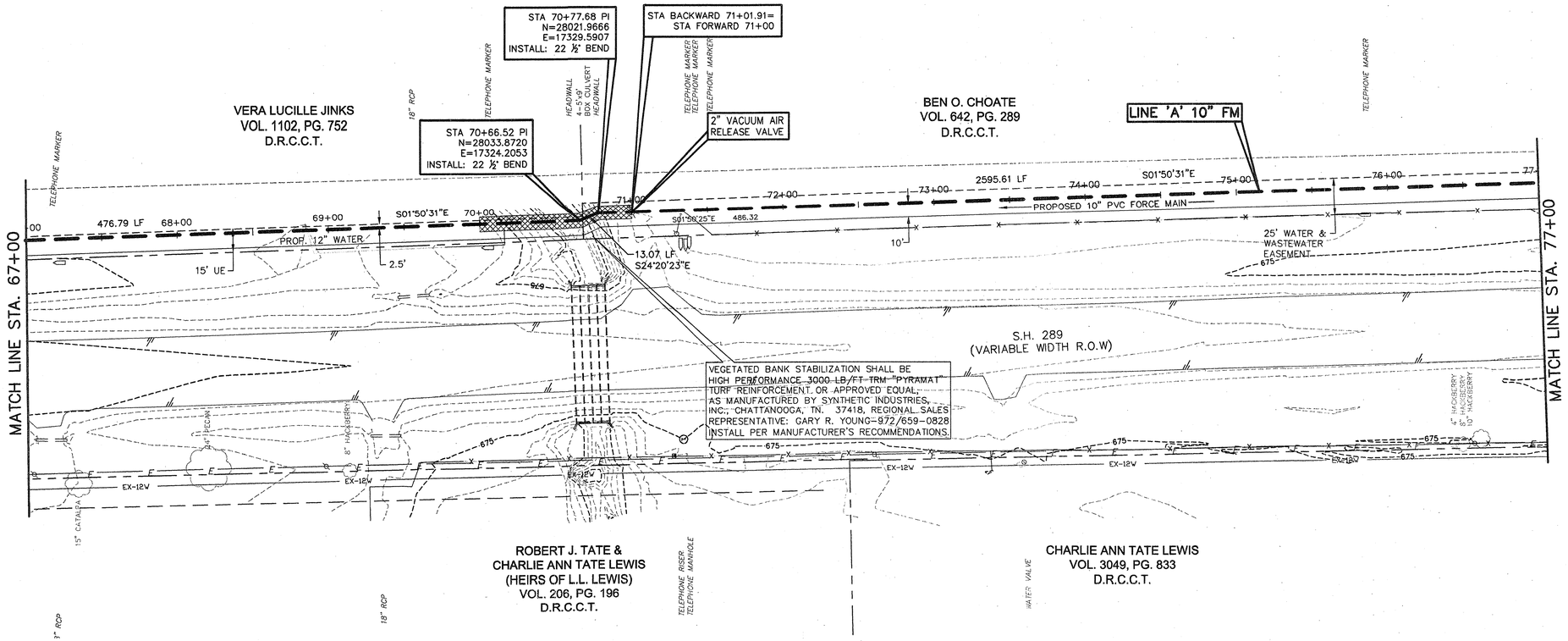

LINE 'A'

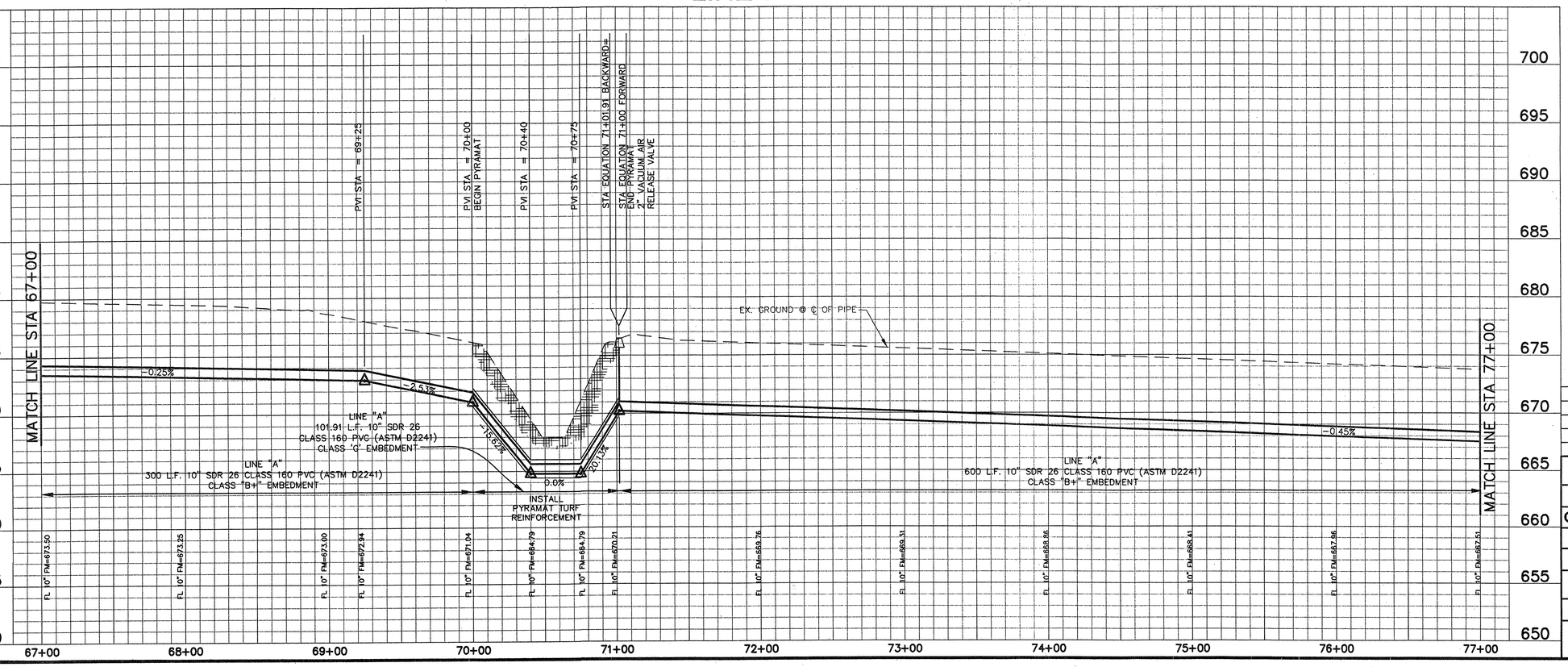

BENCHMARKS:

CONTROL MONUMENT No. 3 – CONCRETE MONUMENT WITH 5/8 INCH IRON ROD WITH CAP STAMPED "HUITT-ZOLLARS" AT THE NORTHEAST CORNER OF THE INTERSECTION OF STATE HIGHWAY 289 AND COUNTY ROAD 83. LOCATED APPROXIMATELY 60 FEET NORTH OF THE CENTERLINE OF COUNTY ROAD 83 AND 115 FEET EAST OF THE CENTERLINE OF STATE HIGHWAY 289.
ELEVATION 681.67 FEET

CONTROL MONUMENT No. 5 – CONCRETE MONUMENT WITH 5/8 INCH IRON RODWITH CAP STAMPED "HUITT-ZOLLARS" AT THE SOUTHEAST CORNER OF THE INTERSECTION OF STATE HIGHWAY 289 AND COUNTY ROAD 88. LOCATED APPROXIMATELY 45 FEET SOUTH OF THE CENTERLINE OF COUNTY ROAD 88 AND 112 FEET EAST OF THE CENTERLINE OF STATE HIGHWAY 289.
ELEVATION 681.76 FEET

10/10/03

STATE OF TEXAS
OCIE LEE VEST
80062
REGISTERED PROFESSIONAL ENGINEER

CITY OF CELINA, TEXAS
APPROVED FOR CONSTRUCTION
DATE: 10/20/03
BY: P.A.C.

NO.	DATE	REVISIONS	APPROVED

CARTER RANCH

STA 67+00 - 77+00

OFFSITE WASTEWATER & LIFT STATION NO. 2

CENTURION AMERICAN DEVELOPMENT GROUP

CELINA, TEXAS

HUITT-ZOLLARS

Huitt-Zollars, Inc. Dallas
3131 McKinney Avenue, Suite 600
Dallas, Texas 75204-2489
Phone (214) 871-3311 Fax (214) 871-0757

DESIGN	DRAWN	DATE	SCALE	NOTES	FILE	NO.
HZI	HZI	OCT. 2003	H.1"=40' V.1"=5'		01312223	10/20

H:\Proj\01312223\dgn\CARTER RANCH PHASE 1.dgn\HiZone\WWPlans\312223US28.DWG 09/11/03 11:43:20 AM CDT

SS-200310-01

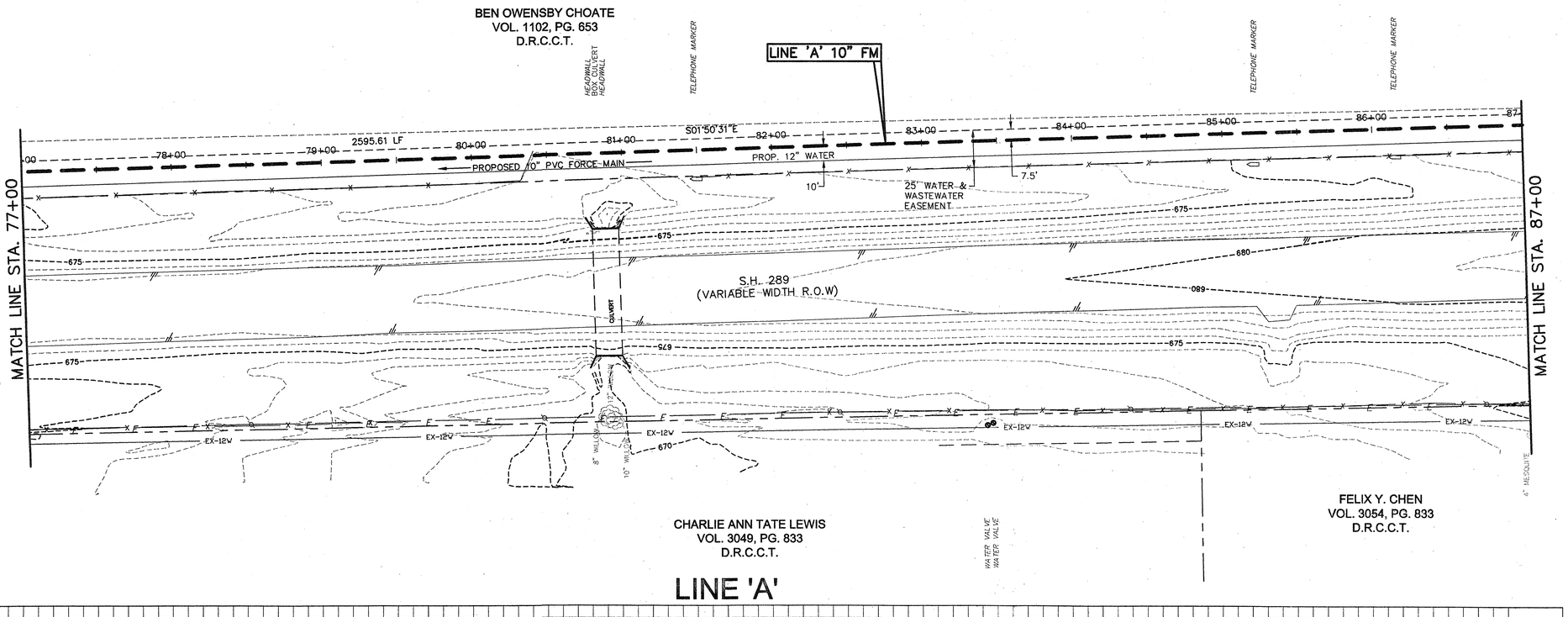

LINE 'A'

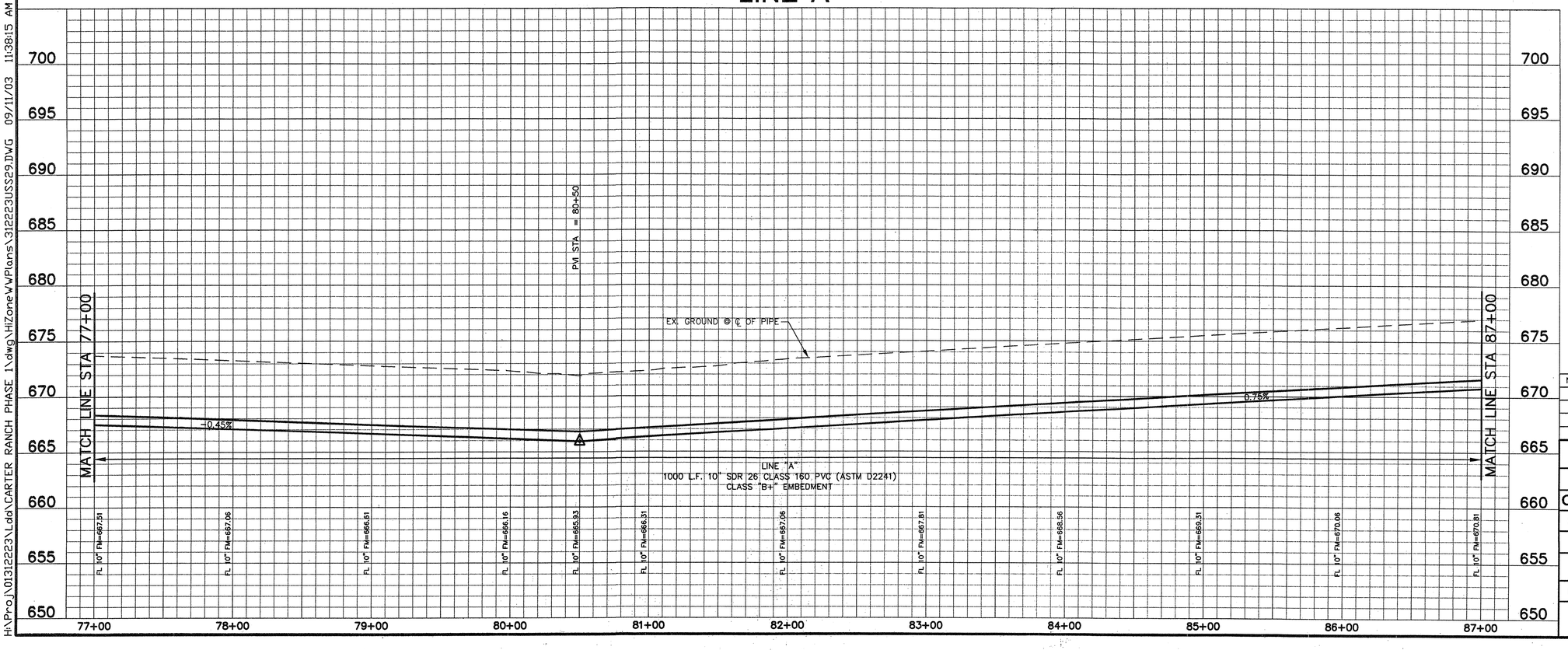

BENCHMARKS:

CONTROL MONUMENT No. 3 – CONCRETE MONUMENT WITH 5/8 INCH IRON ROD WITH CAP STAMPED "HUITT-ZOLLARS" AT THE NORTHEAST CORNER OF THE INTERSECTION OF STATE HIGHWAY 289 AND COUNTY ROAD 83. LOCATED APPROXIMATELY 60 FEET NORTH OF THE CENTERLINE OF COUNTY ROAD 83 AND 115 FEET EAST OF THE CENTERLINE OF STATE HIGHWAY 289.
ELEVATION 681.67 FEET

CONTROL MONUMENT No. 5 – CONCRETE MONUMENT WITH 5/8 INCH IRON RODWITH CAP STAMPED "HUITT-ZOLLARS" AT THE SOUTHEAST CORNER OF THE INTERSECTION OF STATE HIGHWAY 289 AND COUNTY ROAD 88. LOCATED APPROXIMATELY 45 FEET SOUTH OF THE CENTERLINE OF COUNTY ROAD 88 AND 112 FEET EAST OF THE CENTERLINE OF STATE HIGHWAY 289.
ELEVATION 681.76 FEET

10/16/03

STATE OF TEXAS
OCIE LEE WEST
80062
REGISTERED PROFESSIONAL ENGINEER

CITY OF CELINA, TEXAS
APPROVED FOR CONSTRUCTION
DATE: 10/20/03
BY: P.A.C.

NO.	DATE	REVISIONS	APPROVED

CARTER RANCH

STA 77+00 - 87+00

OFFSITE WASTEWATER & LIFT STATION NO. 2

CENTURION AMERICAN DEVELOPMENT GROUP

CELINA, TEXAS

HUITT-ZOLLARS

Huitt-Zollars, Inc. Dallas
3131 McKinney Avenue, Suite 600
Dallas, Texas 75204-2489
Phone (214) 871-3311 Fax (214) 871-0757

DESIGN	DRAWN	DATE	SCALE	NOTES	FILE	NO.
HZI	HZI	OCT. 2003	H.1"=40' V.1"=5'		01312223	11/20

H:\Proj\01312223\Ldd\CARTER RANCH PHASE 1\dwg\HZone\WPlans\312223USS29.DWG 09/11/03 11:38:15 AM CDT

SS-200310-01

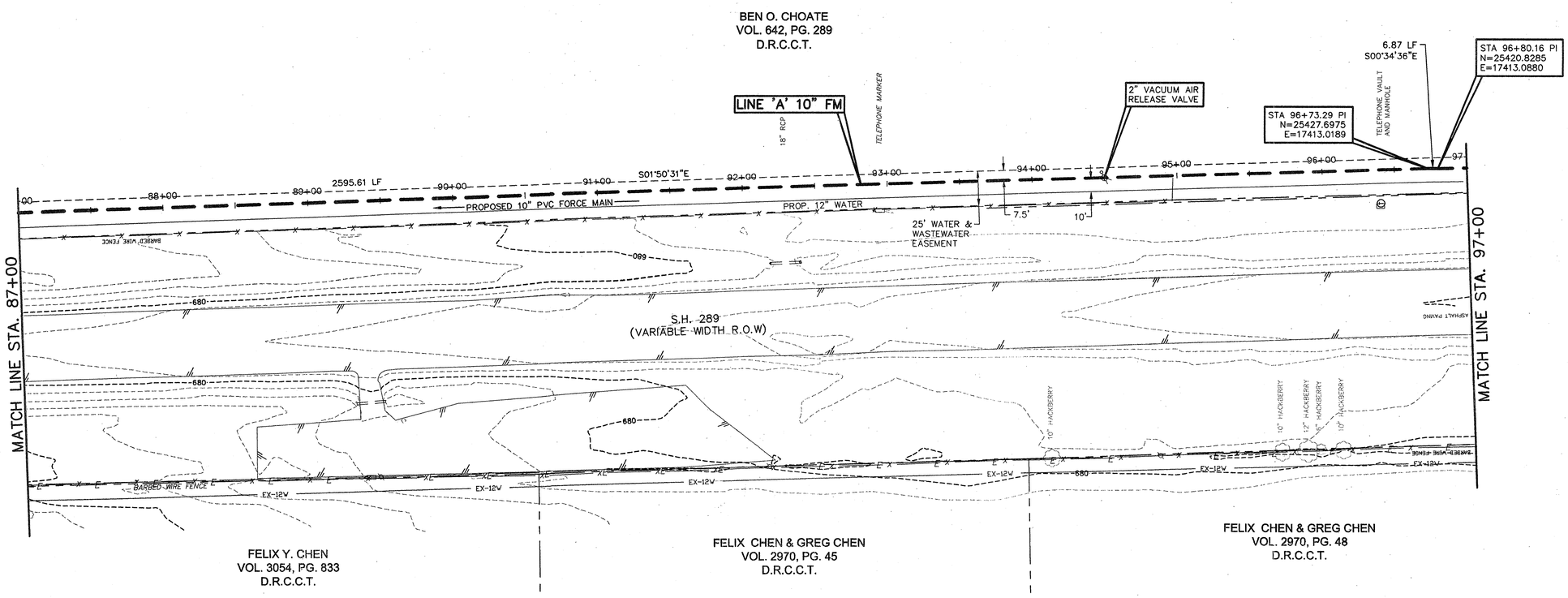

LINE 'A'

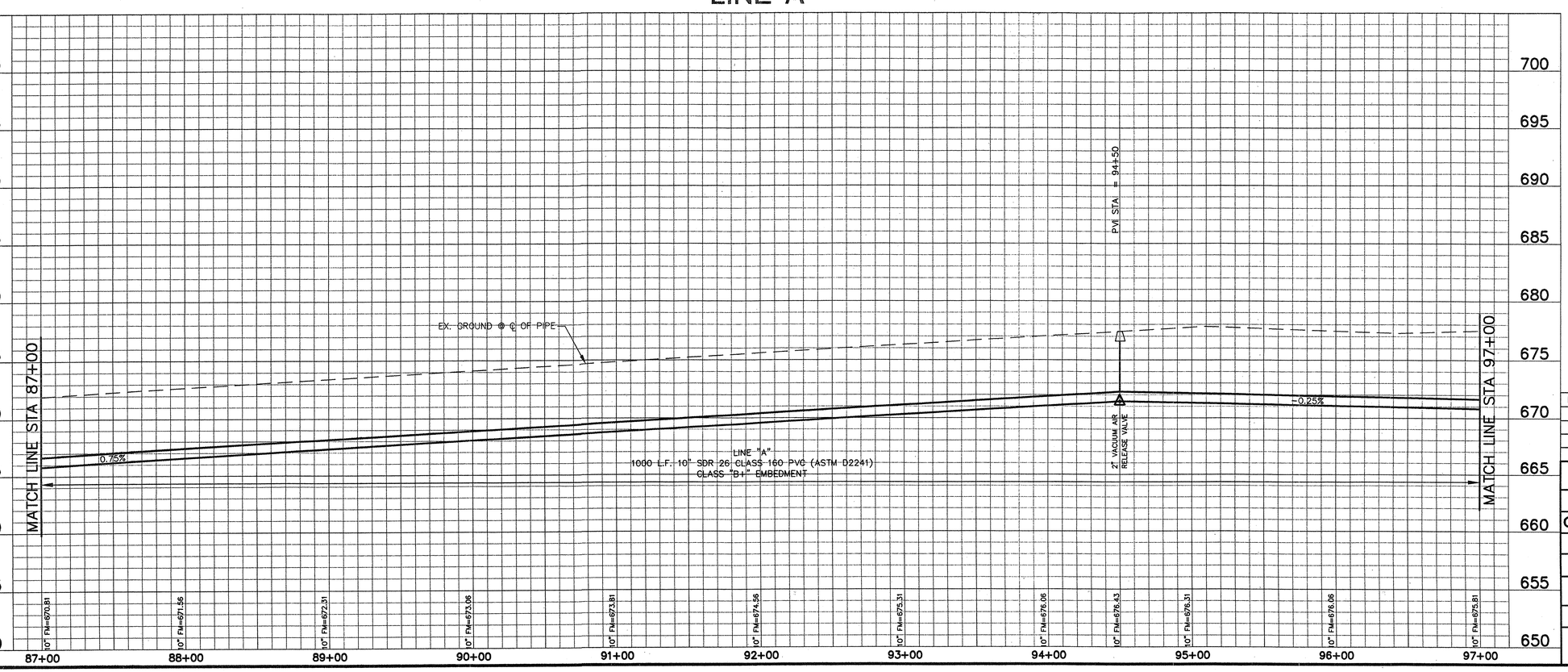

BENCHMARKS:

CONTROL MONUMENT No. 3 – CONCRETE MONUMENT WITH 5/8 INCH IRON ROD WITH CAP STAMPED "HUITT-ZOLLARS" AT THE NORTHEAST CORNER OF THE INTERSECTION OF STATE HIGHWAY 289 AND COUNTY ROAD 83. LOCATED APPROXIMATELY 60 FEET NORTH OF THE CENTERLINE OF COUNTY ROAD 83 AND 115 FEET EAST OF THE CENTERLINE OF STATE HIGHWAY 289.
ELEVATION 681.67 FEET

CONTROL MONUMENT No. 5 – CONCRETE MONUMENT WITH 5/8 INCH IRON RODWITH CAP STAMPED "HUITT-ZOLLARS" AT THE SOUTHEAST CORNER OF THE INTERSECTION OF STATE HIGHWAY 289 AND COUNTY ROAD 88. LOCATED APPROXIMATELY 45 FEET SOUTH OF THE CENTERLINE OF COUNTY ROAD 88 AND 112 FEET EAST OF THE CENTERLINE OF STATE HIGHWAY 289.
ELEVATION 681.76 FEET

CITY OF CELINA, TEXAS
APPROVED FOR CONSTRUCTION
DATE: 10/20/03
BY: P.A.C.

10/16/03
STATE OF TEXAS
OCIE LEE VEST
80062
REGISTERED PROFESSIONAL ENGINEER

NO.	DATE	REVISIONS	APPROVED

CARTER RANCH

STA 87+00 - 97+00

OFFSITE WASTEWATER & LIFT STATION NO. 2

CENTURION AMERICAN DEVELOPMENT GROUP

CELINA, TEXAS

HUITT-ZOLLARS
Huitt-Zollars, Inc.
3131 McKinney Avenue, Suite 600
Dallas, Texas 75204-2489
Phone (214) 871-3311
Fax (214) 871-0757
Dallas

DESIGN	DRAWN	DATE	SCALE	NOTES	FILE	NO.
HZI	HZI	OCT. 2003	H.1"=40' V.1"=5'		01312223	12/20

H:\Proj\01312223\Ldd\CARTER RANCH PHASE 1\dwg\HiZoneWWPlans\312223USS30.DWG 09/11/03 11:26:54 AM CDT

SS-200310-01

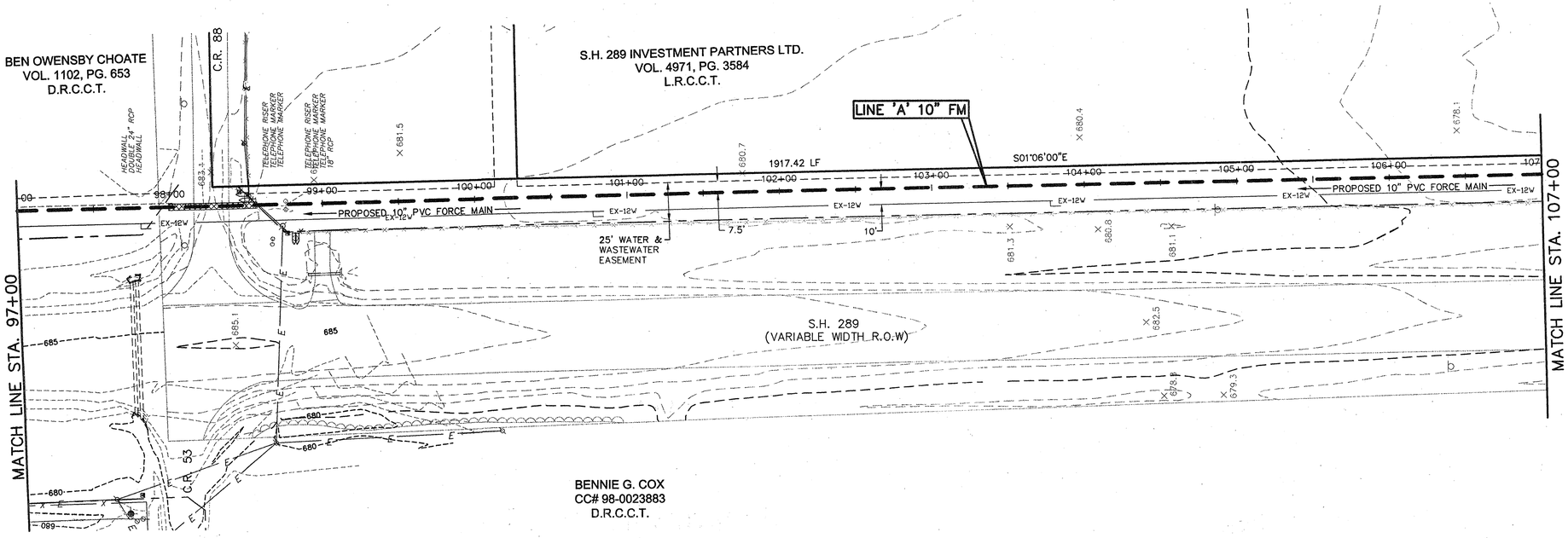

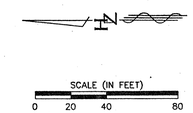

LINE 'A'

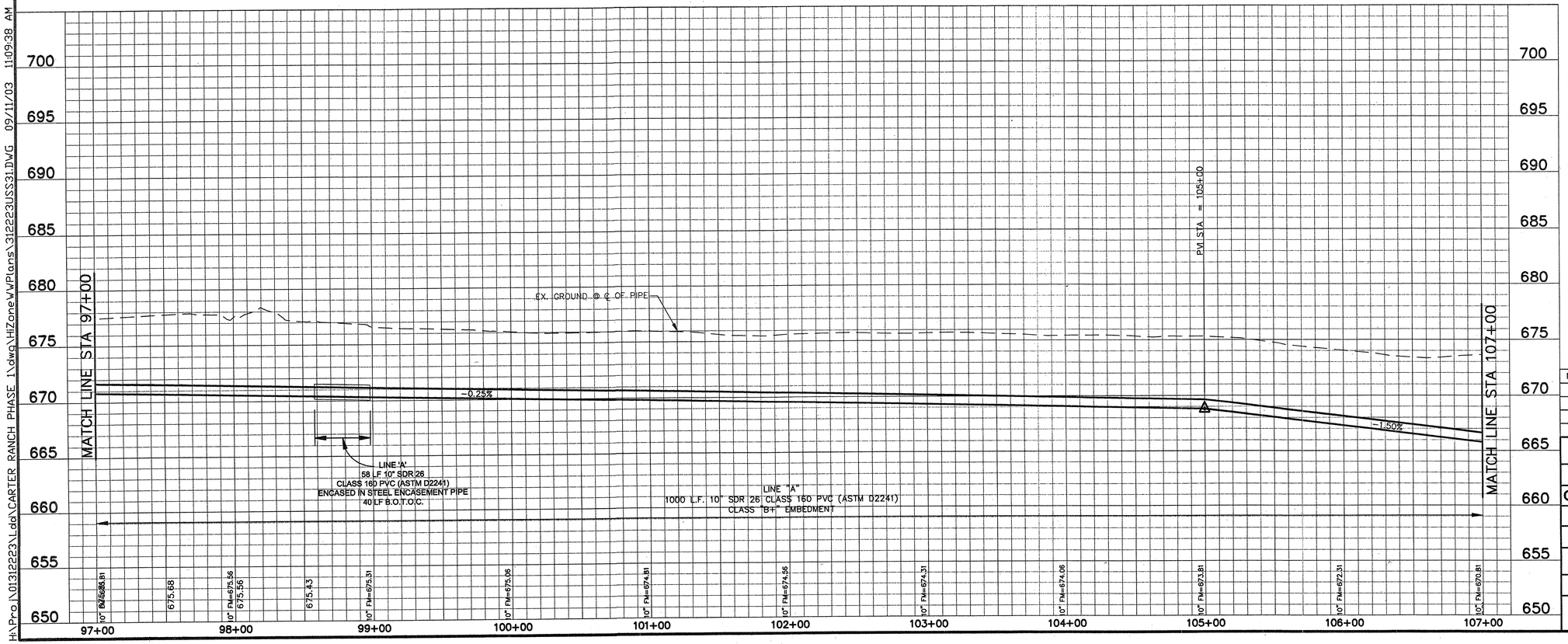

BENCHMARKS:

CONTROL MONUMENT No. 3 – CONCRETE MONUMENT WITH 5/8 INCH IRON ROD WITH CAP STAMPED "HUITT–ZOLLARS" AT THE NORTHEAST CORNER OF THE INTERSECTION OF STATE HIGHWAY 289 AND COUNTY ROAD 83. LOCATED APPROXIMATELY 60 FEET NORTH OF THE CENTERLINE OF COUNTY ROAD 83 AND 115 FEET EAST OF THE CENTERLINE OF STATE HIGHWAY 289.
ELEVATION 681.67 FEET

CONTROL MONUMENT No. 5 – CONCRETE MONUMENT WITH 5/8 INCH IRON RODWITH CAP STAMPED "HUITT–ZOLLARS" AT THE SOUTHEAST CORNER OF THE INTERSECTION OF STATE HIGHWAY 289 AND COUNTY ROAD 88. LOCATED APPROXIMATELY 45 FEET SOUTH OF THE CENTERLINE OF COUNTY ROAD 88 AND 112 FEET EAST OF THE CENTERLINE OF STATE HIGHWAY 289.
ELEVATION 681.76 FEET

CITY OF CELINA, TEXAS
APPROVED FOR CONSTRUCTION
DATE: 10/20/03
BY: P.A.C.

10/16/03
STATE OF TEXAS
OCIE LEE VEST
80062
REGISTERED PROFESSIONAL ENGINEER

NO.	DATE	REVISIONS	APPROVED

CARTER RANCH

STA 97+00 - 107+00

OFFSITE WASTEWATER & LIFT STATION NO. 2

CENTURION AMERICAN DEVELOPMENT GROUP

CELINA, TEXAS

HUITT-ZOLLARS
Huitt-Zollars, Inc. Dallas
3131 McKinney Avenue, Suite 600
Dallas, Texas 75204-2489
Phone (214) 871-3311 Fax (214) 871-0757

DESIGN	DRAWN	DATE	SCALE	NOTES	FILE	NO.
HZI	HZI	OCT. 2003	H.1"=40' V.1"=5'		01312223	13/20

H:\Proj\01312223\Ldd\CARTER RANCH PHASE 1\dwg\HZone\WPlans\312223USS3L.DWG 09/11/03 11:09:38 AM CDT

SS-200310-01

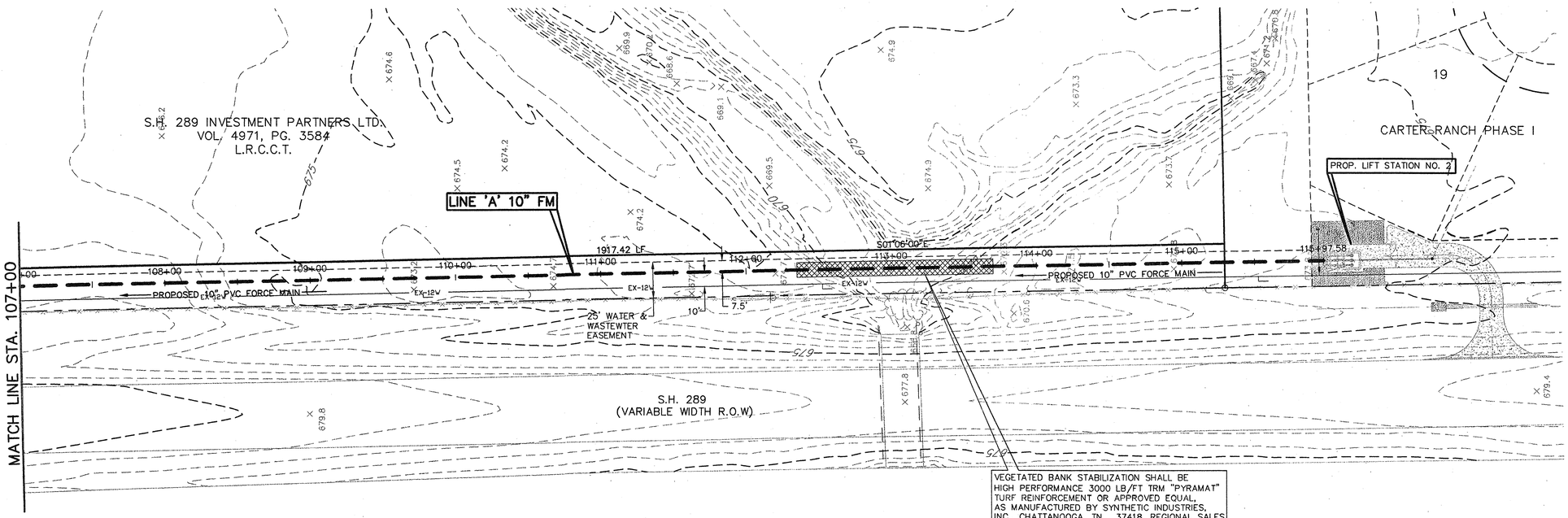

SCALE (IN FEET)
0 20 40 80

LINE 'A'

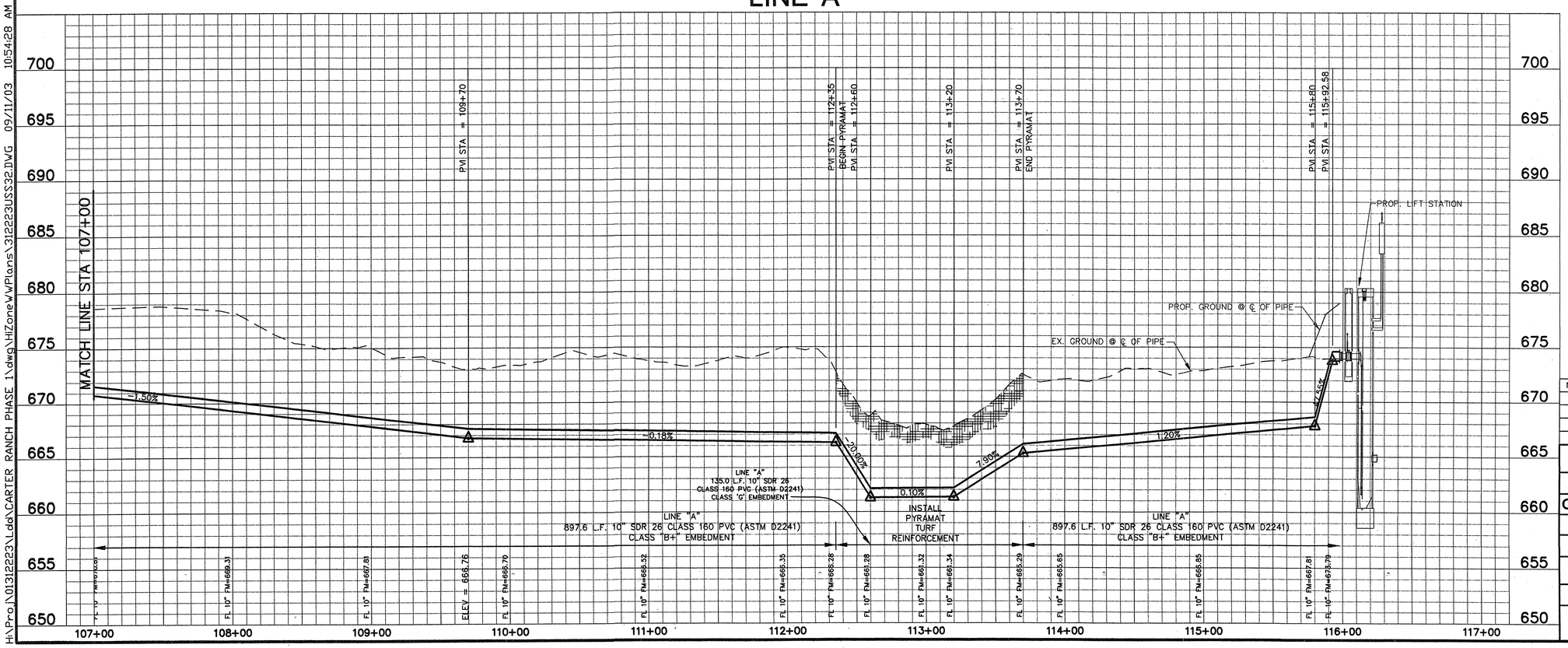

BENCHMARKS:

CONTROL MONUMENT No. 3 – CONCRETE MONUMENT WITH 5/8 INCH IRON ROD WITH CAP STAMPED "HUITT-ZOLLARS" AT THE NORTHEAST CORNER OF THE INTERSECTION OF STATE HIGHWAY 289 AND COUNTY ROAD 83. LOCATED APPROXIMATELY 60 FEET NORTH OF THE CENTERLINE OF COUNTY ROAD 83 AND 115 FEET EAST OF THE CENTERLINE OF STATE HIGHWAY 289.
ELEVATION 681.67 FEET

CONTROL MONUMENT No. 5 – CONCRETE MONUMENT WITH 5/8 INCH IRON RODWITH CAP STAMPED "HUITT-ZOLLARS" AT THE SOUTHEAST CORNER OF THE INTERSECTION OF STATE HIGHWAY 289 AND COUNTY ROAD 88. LOCATED APPROXIMATELY 45 FEET SOUTH OF THE CENTERLINE OF COUNTY ROAD 88 AND 112 FEET EAST OF THE CENTERLINE OF STATE HIGHWAY 289.
ELEVATION 681.76 FEET

10/16/03

CITY OF CELINA, TEXAS
APPROVED FOR CONSTRUCTION
DATE: 10/20/03
BY: P.A.C.

STATE OF TEXAS
OCIE LEE VEST
80062
REGISTERED PROFESSIONAL ENGINEER

NO.	DATE	REVISIONS	APPROVED

CARTER RANCH

STA 107+00 - 115+97.58

OFFSITE WASTEWATER & LIFT STATION NO. 2

CENTURION AMERICAN DEVELOPMENT GROUP

CELINA, TEXAS

HUITT-ZOLLARS

Huitt-Zollars, Inc.
2121 McKinney Avenue, Suite 600
Dallas, Texas 75204-2489
Phone (214) 871-3311 Fax (214) 871-0757

DESIGN	DRAWN	DATE	SCALE	NOTES	FILE	NO.
HZI	HZI	OCT. 2003	H.1"=40' V.1"=5'		01312223	14/20

H:\Proj\01312223\Ldd\CARTER RANCH PHASE 1\dwg\HZone\WPlans\31223USS32.DWG 09/11/03 10:54:28 AM CDT

SS-200310-01

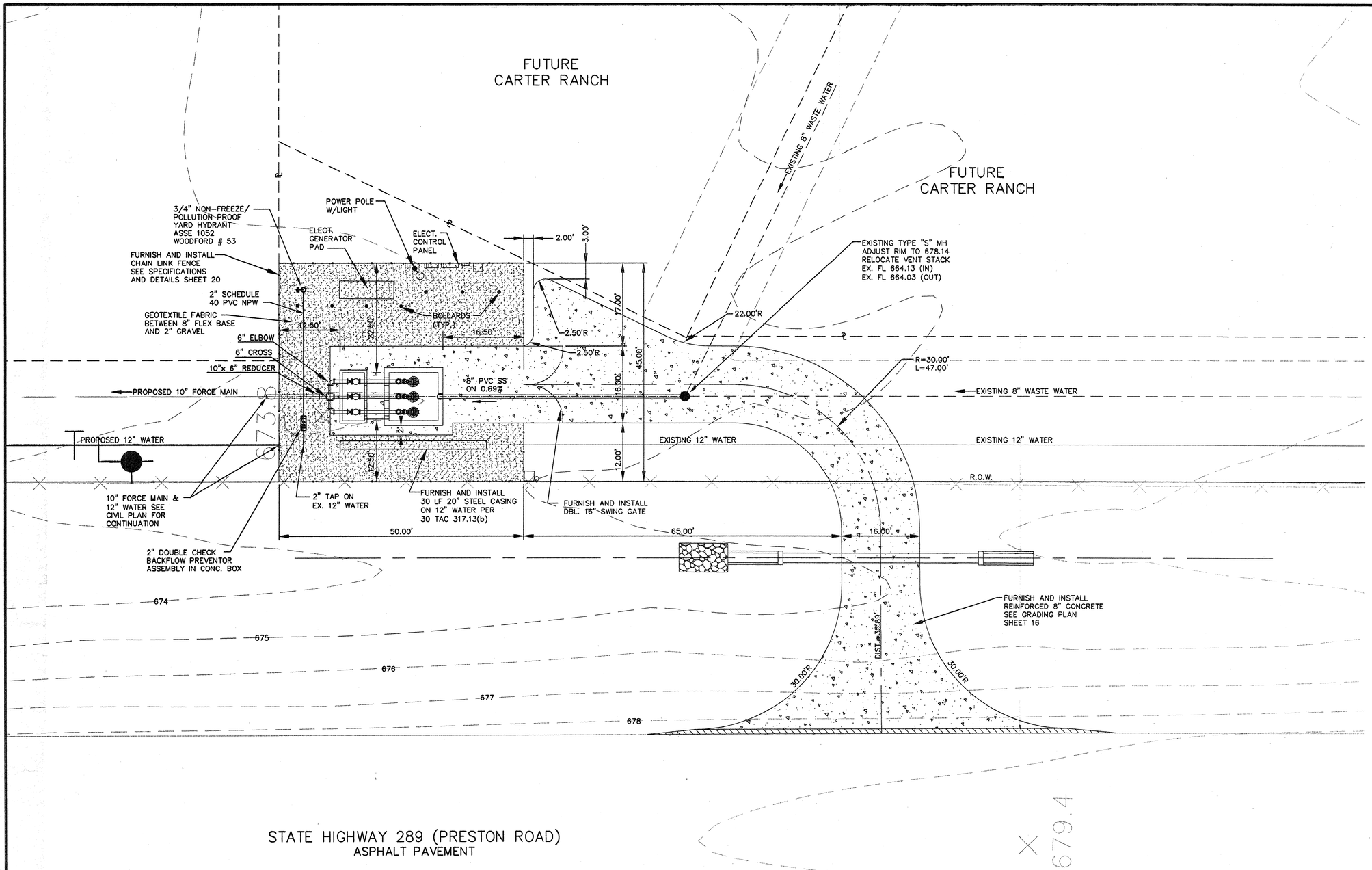

GENERAL NOTES

NOTE	DESCRIPTION
1.	ALL WORK AT THIS SITE SHALL BE COORDINATED WITH THE LIFT STATION CONTRACTOR.
2.	BEFORE COMMENCING ANY ACTIVITY UNDER OR PERTAINING TO THIS CONTRACT, THE CONTRACTOR SHALL NOTIFY THE OWNER 48 HOURS BEFORE COMMENCING CONSTRUCTION.
3.	THE CONTRACTOR SHALL NOTIFY THE OWNER AT ONCE IF ANY CONFLICT IS DISCOVERED BETWEEN ACTUAL FIELD CONDITIONS AND THE CONSTRUCTION PLANS.
4.	THE CONTRACTOR SHALL ASSUME ALL RESPONSIBILITY FOR ANY DAMAGE TO ANY EXISTING OR NEWLY CONSTRUCTED BUILDING, PAVEMENT, SIDEWALK, LANDSCAPING, FENCING, UTILITIES, OR ANY OTHER PUBLICLY OR PRIVATELY OWNED IMPROVEMENT, AND SHALL REPAIR, REPLACE OR OTHERWISE PROVIDE FOR RESTORATION OF SAME TO ITS ORIGINAL CONDITION AT NO ADDITIONAL COST TO THE OWNER.
5.	THE CONTRACTOR SHALL ACCURATELY LOCATE AND MARK CONSTRUCTION LIMITS AND PROPERTY LINES, AND SHALL LIMIT ALL CONSTRUCTION ACTIVITIES TO WHICHEVER APPLICABLE.
6.	THE CONTRACTOR SHALL MAINTAIN A SET OF CONSTRUCTION PLANS WHEREIN AN ACCURATE RECORD SHALL BE KEPT OF AS-CONSTRUCTED INFORMATION ON ALL SITE IMPROVEMENTS. THIS PLAN SET SHALL BE SUBMITTED TO THE OWNER'S REPRESENTATIVE AT THE COMPLETION OF CONSTRUCTION FOR USE IN THE PREPARATION OF RECORD DRAWINGS.
7.	THE CONTRACTOR SHALL SCHEDULE ALL INSPECTIONS AND TESTS A MINIMUM OF 48 HOURS IN ADVANCE. AT THE COMPLETION OF CONSTRUCTION, A FINAL INSPECTION SHALL VERIFY COMPLETION OF ALL SITE IMPROVEMENTS IN ADHERENCE WITH PLANS.
8.	ALL WORK SHALL COMPLY WITH THE NORTH CENTRAL TEXAS COUNCIL OF GOVERNMENTS (N.C.T.C.O.G.) STANDARD SPECIFICATIONS FOR PUBLIC WORKS CONSTRUCTION.
9.	ALL DIMENSIONS ARE TO FACE OF CURB, FACE OF BLDG. OR EDGE OF CONCRETE, UNLESS NOTED OTHERWISE.

CITY OF CELINA, TEXAS
APPROVED FOR CONSTRUCTION
DATE: 10/3/03
BY: PAC

STATE OF TEXAS
SANFORD W. CASE
59993
REGISTERED
PROFESSIONAL ENGINEER
10-2-03

NO.	DATE	REVISIONS	APPROVED

CARTER RANCH

LIFT STATION NO. 2

SITE PLAN

CENTURION AMERICAN DEVELOPMENT GROUP

CELINA, TEXAS

HUITT-ZOLLARS

Huitt-Zollars, Inc.
3131 McKinney Avenue, Suite 600
Dallas, Texas 75204-2489
Phone (214) 871-3311 Fax (214) 871-0757
Dallas

DESIGN	DRAWN	DATE	SCALE	NOTES	FILE	NO.
HZI	HZI	OCT. 2003			01312223	15/20

SS-200310-01

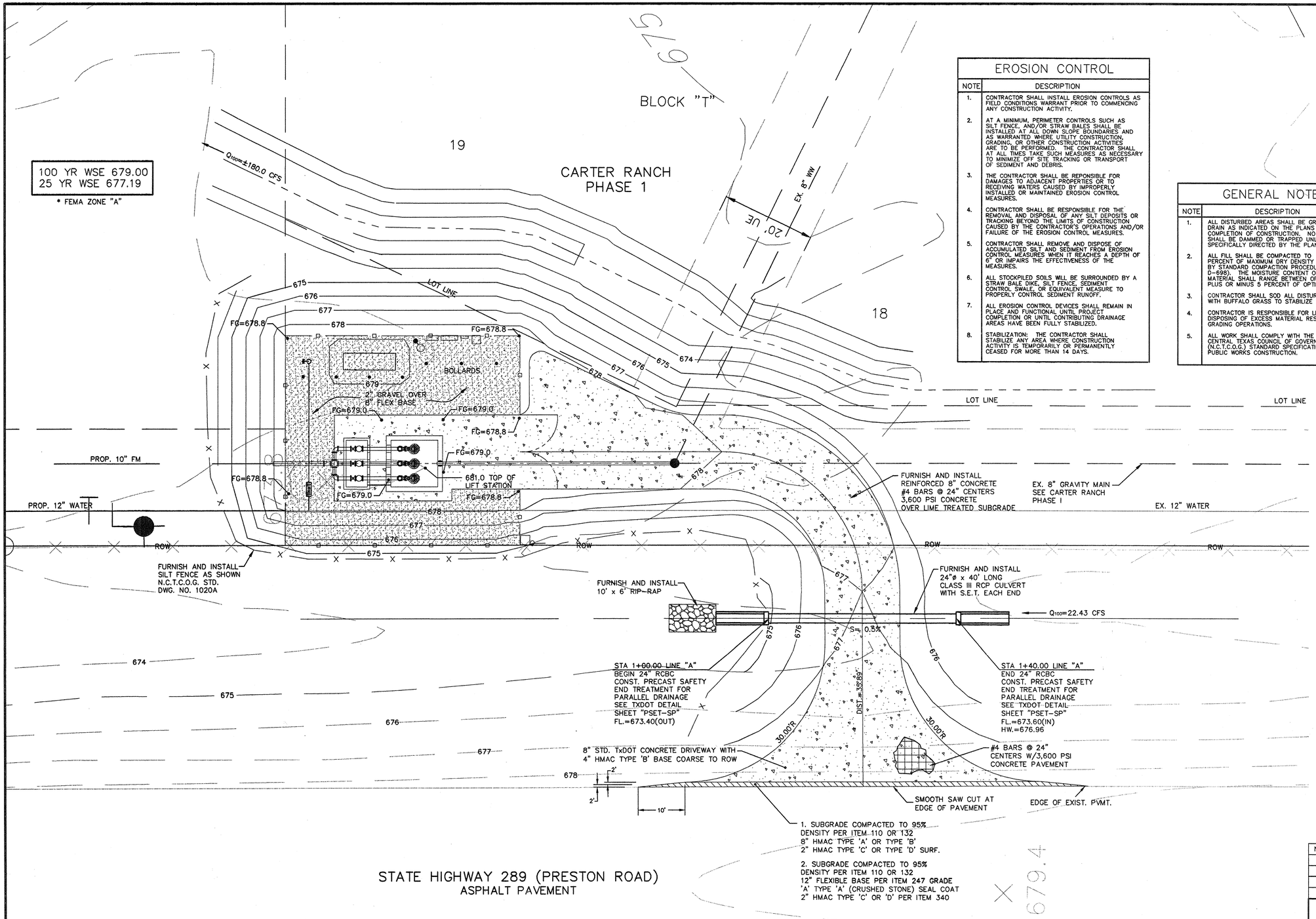

EROSION CONTROL

NOTE	DESCRIPTION
1.	CONTRACTOR SHALL INSTALL EROSION CONTROLS AS FIELD CONDITIONS WARRANT PRIOR TO COMMENCING ANY CONSTRUCTION ACTIVITY.
2.	AT A MINIMUM, PERIMETER CONTROLS SUCH AS SILT FENCE, AND/OR STRAW BALES SHALL BE INSTALLED AT ALL DOWN SLOPE BOUNDARIES AND AS WARRANTED WHERE UTILITY CONSTRUCTION, GRADING, OR OTHER CONSTRUCTION ACTIVITIES ARE TO BE PERFORMED. THE CONTRACTOR SHALL AT ALL TIMES TAKE SUCH MEASURES AS NECESSARY TO MINIMIZE OFF SITE TRACKING OR TRANSPORT OF SEDIMENT AND DEBRIS.
3.	THE CONTRACTOR SHALL BE REPONSIBLE FOR DAMAGES TO ADJACENT PROPERTIES OR TO RECEIVING WATERS CAUSED BY IMPROPERLY INSTALLED OR MAINTAINED EROSION CONTROL MEASURES.
4.	CONTRACTOR SHALL BE RESPONSIBLE FOR THE REMOVAL AND DISPOSAL OF ANY SILT DEPOSITS OR TRACKING BEYOND THE LIMITS OF CONSTRUCTION CAUSED BY THE CONTRACTOR'S OPERATIONS AND/OR FAILURE OF THE EROSION CONTROL MEASURES.
5.	CONTRACTOR SHALL REMOVE AND DISPOSE OF ACCUMULATED SILT AND SEDIMENT FROM EROSION CONTROL MEASURES WHEN IT REACHES A DEPTH OF 6" OR IMPAIRS THE EFFECTIVENESS OF THE MEASURES.
6.	ALL STOCKPILED SOILS WILL BE SURROUNDED BY A STRAW BALE DIKE, SILT FENCE, SEDIMENT CONTROL SWALE, OR EQUIVALENT MEASURE TO PROPERLY CONTROL SEDIMENT RUNOFF.
7.	ALL EROSION CONTROL DEVICES SHALL REMAIN IN PLACE AND FUNCTIONAL UNTIL PROJECT COMPLETION OR UNTIL CONTRIBUTING DRAINAGE AREAS HAVE BEEN FULLY STABILIZED.
8.	STABILIZATION: THE CONTRACTOR SHALL STABILIZE ANY AREA WHERE CONSTRUCTION ACTIVITY IS TEMPORARILY OR PERMANENTLY CEASED FOR MORE THAN 14 DAYS.

GENERAL NOTES

NOTE	DESCRIPTION
1.	ALL DISTURBED AREAS SHALL BE GRADED TO DRAIN AS INDICATED ON THE PLANS AND UPON COMPLETION OF CONSTRUCTION. NO DRAINAGE SHALL BE DAMMED OR TRAPPED UNLESS SPECIFICALLY DIRECTED BY THE PLANS.
2.	ALL FILL SHALL BE COMPACTED TO 95 PERCENT OF MAXIMUM DRY DENSITY AS OBTAINED BY STANDARD COMPACTION PROCEDURE (ASTM D-698). THE MOISTURE CONTENT OF THIS MATERIAL SHALL RANGE BETWEEN OPTIMUM AND PLUS OR MINUS 5 PERCENT OF OPTIMUM.
3.	CONTRACTOR SHALL SOD ALL DISTURBED SLOPES WITH BUFFALO GRASS TO STABILIZE SLOPE.
4.	CONTRACTOR IS RESPONSIBLE FOR LEGALLY DISPOSING OF EXCESS MATERIAL RESULTING FROM GRADING OPERATIONS.
5.	ALL WORK SHALL COMPLY WITH THE NORTH CENTRAL TEXAS COUNCIL OF GOVERNMENTS (N.C.T.C.O.G.) STANDARD SPECIFICATIONS FOR PUBLIC WORKS CONSTRUCTION.

SCALE (IN FEET)
0 5 10 20

LEGEND :

- EXISTING TREES
- OLD FENCE
- NEW FENCE
- 620 — FINISHED GRADE CONTOUR
- EXISTING GRADE CONTOUR
- FG=660 FINISHED SPOT GRADE
- NPW — NON POTABLE WATER

CITY OF CELINA, TEXAS
APPROVED FOR CONSTRUCTION
DATE: 10/3/03
BY: PAC

STATE OF TEXAS
SANFORD W. CASE
59993
REGISTERED
PROFESSIONAL ENGINEER
10-2-03

NO.	DATE	REVISIONS	APPROVED

CARTER RANCH

LIFT STATION NO. 2

GRADING PLAN

CENTURION AMERICAN DEVELOPMENT GROUP

CELINA, TEXAS

HUITT-ZOLLARS

Huitt-Zollars, Inc. Dallas
3131 McKinney Avenue, Suite 600
Dallas, Texas 75204-2489
Phone (214) 871-3311 Fax (214) 871-0757

DESIGN	DRAWN	DATE	SCALE	NOTES	FILE	NO.
HZI	HZI	OCT. 2003			01312223	16/20

SS-200310-01

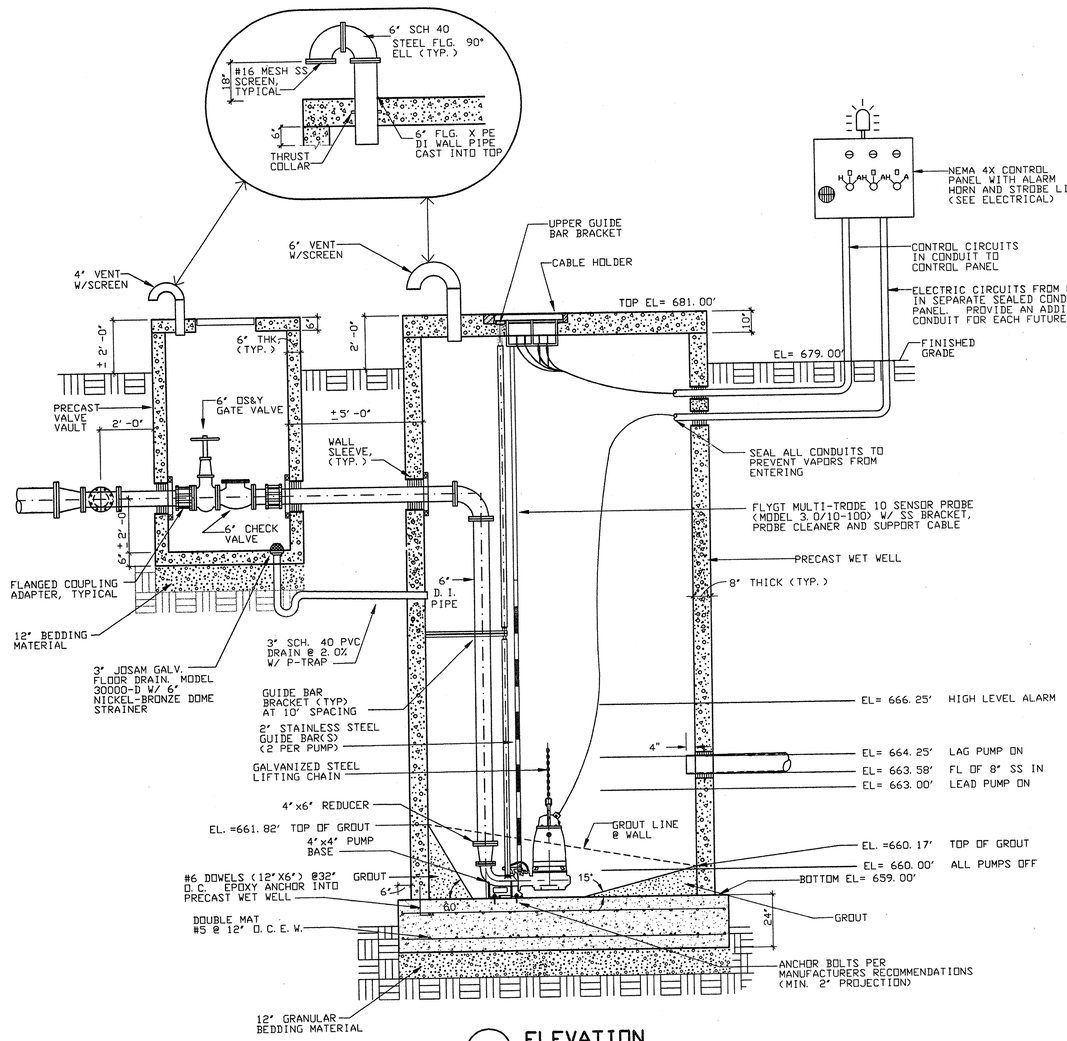

1 **ELEVATION**
SCALE: 3/8 "=1'-0"

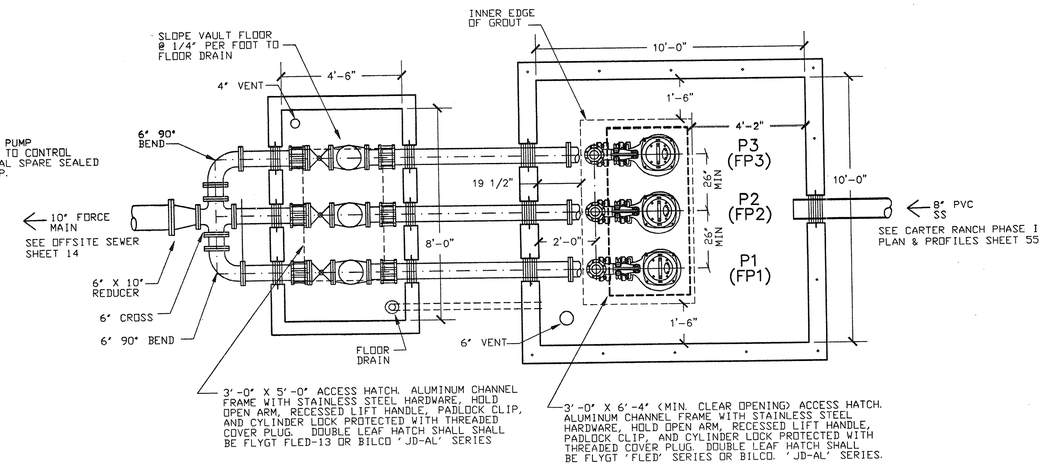

2 **PLAN**
SCALE: 3/8 "=1'-0"

GENERAL NOTES

1. IN ORDER TO PREVENT SHEARING WITHIN THE BACKFILL AREAS, THE DISCHARGE PIPING SHALL BE DUCTILE IRON FROM THE LIFT STATION, THRU THE VALVE VAULT, AND ONE FULL PIPE JOINT INTO THE FORCE MAIN TRENCH.
2. ALL DUCTILE IRON PIPING SHALL BE ANSI/AWWA C115. FITTINGS SHALL BE ANSI/AWWA C110 DUCTILE IRON, FLANGED, STANDARD THICKNESS. JOINTS SHALL BE ANSI/AWWA C111, MECHANICAL JOINT. PIPE AND FITTINGS SHALL HAVE INTERNAL AND EXTERNAL EPOXY COATINGS. ALL BURIED DUCTILE IRON PIPING SHALL ALSO BE POLYETHYLENE ENCASED IN ACCORDANCE WITH AWWA C105.
3. ALL DUCTILE IRON PIPING SHALL BE LINED WITH TWO 8.0 MIL COATS (16 MIL TOTAL DFT) OF TNEMEC SERIES 164 COLOR EPOXOLINE 80 OR APPROVED EQUAL.
4. ALL EXPOSED METALLIC PIPE AND FITIITNGS WITHIN THE WET WELL AND VALVE VAULT SHALL BE COATED WITH A MINIMUM OF TWO 6.0 MIL COATS (12.0 MILS TOTAL DFT) OF DEVOE BAR-RUST 233H HIGH PERFORMANCE EPOXY COATING OR APPROVED EQUAL.
5. ALL ELECTRICAL JUNCTION BOXES SHALL BE LOCATED OUTSIDE OF THE WET WELL BETWEEN THE CONTROL PANEL AND THE WET WALL. A SEAL COUPLING MAY BE USED IN LIEU OF A JUNCTION BOX. HOWEVER IT MUST BE LOCATED BETWEEN THE CONTROL PANEL AND THE WET WELL. ALL COMPONENTS WITHIN THE WET WELL SHALL BE EXPLOSION-PROOF.
6. WHERE PIPES OR CONDUIT PASS THRU THE WALL OF THE WET WELL, THE SPACE BETWEEN THE WET WELL AND THE PIPE SHALL BE SEALED WITH LINK SEALS.
7. THE FOUNDATION OF THE WET WELL SHALL REST ON UNDISTURBED SOIL. OVER EXCAVATION OF THE WET WELL FOUNDATION SHALL BE FILLED WITH 2,500 PSI CONCRETE TO THE ELEVATION SHOWN ON THE PLANS FOR THE BOTTOM OF THE WET WELL FOUNDATION.
8. CONTRACTOR SHALL GROUT OPENINGS FOR ACCESS FRAMES AND WET WELL BOTTOM AS SHOWN. ALL GROUT SHALL BE NON-SHRINK AND BE COMPATIBLE WITH SPECIFIED COATINGS. CONFIGURE GROUT IN WET WELL BOTTOM PER PUMP MANUFACTURERS RECOMMENDATION.
9. COMPLETELY RESTRAIN ALL JOINTS FOR PIPE, BENDS, TEES AND FITTINGS ON THE FORCE MAIN PIPING WITHIN THE LIFT STATION SITE AND WITHIN 100 FEET OUTSIDE OF THE LIFT STATION FENCE.
10. NEMA 4X TRI-PLEX PUMP CONTROL PANEL SHALL ALTERNATE PUMP STARTING SEQUENCE, INTERFACE WITH LIQUID LEVEL SENSORS, CONTAIN MAIN DISCONNECT SWITCH, PILOT LIGHTS, RUN TIME METERS, HIGH LEVEL/PUMP FAIL ALARM LIGHT, ALARM HORN, BATTERY BACK-UP, AUTO-DIALER AND UNDERWRITERS LABORATORY APPROVAL LABEL. PUMP CONTROLLER SHALL BE FLYGT MT3PC-3.
11. PRECAST VAULTS SHALL BE A MINIMUM OF 4,000 PSI CONCRETE. WALL THICKNESS SHALL MEET OR EXCEED THE MINIMUMS SHOWN. MANUFACTURER SHALL VERIFY WALL THICKNESSES AND PROVIDE ADEQUATE REINFORCING FOR PROPOSED DEPTHS.
12. BACKFILL AROUND THE WET WELL AND VALVE VAULT SHALL BE COMPACTED TO 95% STANDARD PROCTOR AT +/-3% OF OPTIMUM MOISTURE.
13. ALL CONCRETE AND GROUT SURFACES INSIDE THE WET WELL SHALL BE COATED WITH A 6.0 MIL DFT PRIME COAT OF TNEMEC SERIES 201 EPOXOPRIME, 125 MIL DFT COAT OF TNEMEC SERIES 434 CHEMBLOCK H2S, AND A 16 MIL DFT TOP COAT OF TNEMEC SERIES 435 CHEMGEL. ALL CONCRETE AND GROUT SHALL HAVE A MINIMUM OF 28 DAYS CURE TIME PRIOR TO COATING APPLICATION. ABRASIVE BLAST ALL SURFACES TO SSPC-SP13/NACE 6 PRIOR TO COATING APPLICATION. FOLLOW MANUFACTURERS PUBLISHED APPLICATION INSTRUCTIONS INCLUDING THOSE FOR SURFACE REPAIR PRIOR TO COATING.
14. ALL PUMPS, PIPING, AND CONTROLS SHALL BE INSTALLED IN SUCH A MANOR THAT THE LISTED FUTURE PUMPS CAN BE INSTALLED WITH NO CHANGES REQUIRED TO THE STATION PIPING, PUMP DISCHARGE CONNECTIONS, ACCESS HATCHES, STARTERS, OR SWITCHGEAR.

PUMP SCHEDULE

NO.	SERVICE/LOCATION	PUMP EFFICIENCY %	G.P.M. (EA)	PRESSURE (FT. HD.)	DISCHARGE SIZE (IN)	ELECTRICAL VOLTS	ELECTRICAL PHASE	ELECTRICAL RPM	ELECTRICAL HP (EA)	REMARKS
P-1	SEWAGE PUMP/LIFT STATION #2	76.4%	604	59.8	4"	460	3	1755	15	NOTE #1, NOTE #2, NOTE #3
P-2	SEWAGE PUMP/LIFT STATION #2	76.4%	604	59.8	4"	460	3	1755	15	NOTE #1, NOTE #2, NOTE #3
P-3	SEWAGE PUMP/LIFT STATION #2	76.4%	604	59.8	4"	460	3	1755	15	NOTE #1, NOTE #2, NOTE #3
FP-1	FUTURE SEWAGE PUMP/LIFT STATION #2	72.8%	749	87.7	4"	460	3	1755	30	NOTE #3, NOTE #4, NOTE #5, NOTE #6, NOTE #7
FP-2	FUTURE SEWAGE PUMP/LIFT STATION #2	72.8%	749	87.7	4"	460	3	1755	30	NOTE #3, NOTE #4, NOTE #5, NOTE #6, NOTE #7
FP-3	FUTURE SEWAGE PUMP/LIFT STATION #2	72.8%	749	87.7	4"	460	3	1755	30	NOTE #3, NOTE #4, NOTE #5, NOTE #6, NOTE #7

NOTES:

1. SUBMERSIBLE SEWAGE TYPE W/RAIL RETRIEVAL SYSTEM & MULTI-TRODE CONTROL/FLYGT #NP-3153-180-HT-63-456-00-4550.
2. SCHEDULED NUMBERS FOR PUMP EFFIENCY, GPM AND PRESSURE REFLECT ONE PUMP IN OPERATION. WHEN TWO PUMPS ARE OPERATING THE NUMBERS ARE AS FOLLOWS: PUMP EFFICIENCY – 70.0%. GPM – 788 GPM TOTAL, 394 GPM EACH. PRESSURE – 71.5 FT.
3. ALL PUMPS, MOTORS, AND APPURTENANCES WITHIN THE WET WELL SHALL BE EXPLOSION PROOF.
4. FUTURE SUBMERSIBLE SEWAGE PUMPS: FLYGT #NP-3171-180-HT-63-454-00-4550.
5. SCHEDULED NUMBERS FOR FUTURE PUMP EFFIENCY, GPM AND PRESSURE REFLECT ONE PUMP IN OPERATION. WHEN TWO PUMPS ARE OPERATING THE NUMBERS ARE AS FOLLOWS: PUMP EFFICIENCY – 63.3%. GPM – 934 GPM TOTAL, 467 GPM EACH. PRESSURE – 104.0 FT.
6. FUTURE PUMP DATA PROVIDED FOR INFORMATION ONLY. ALL INITIAL EQUIPMENT SHALL BE INSTALLED TO ALLOW FUTURE PUMPS TO BE INSTALLED WITHOUT MODIFICATION TO PIPING, ACCESS HATCHES, STARTERS, OR CONTROLS.
7. FUTURE PUMP LEAD/LAG SETTINGS SHALL MATCH INITIAL PUMP LEAD/LAG SETTINGS.

CITY OF CELINA, TEXAS
APPROVED FOR CONSTRUCTION
DATE: 10/3/03
BY: PAC

STATE OF TEXAS
SANFORD W. CASE
59993
REGISTERED PROFESSIONAL ENGINEER
10-3-03

NO.	DATE	REVISIONS	APPROVED

CARTER RANCH
LIFT STATION NO. 2
PLAN AND SECTION
CENTURION AMERICAN DEVELOPMENT GROUP
CELINA, TEXAS

HUITT-ZOLLARS
Huitt-Zollars, Inc. 3131 McKinney Avenue, Suite 600 Dallas, Texas 75204-2489 Phone (214) 871-3311 Fax (214) 871-0757 Dallas

DESIGN	DRAWN	DATE	SCALE	NOTES	FILE	NO.
HZI	HZI	OCT. 2003			01312223	17/20

SS-200310-01

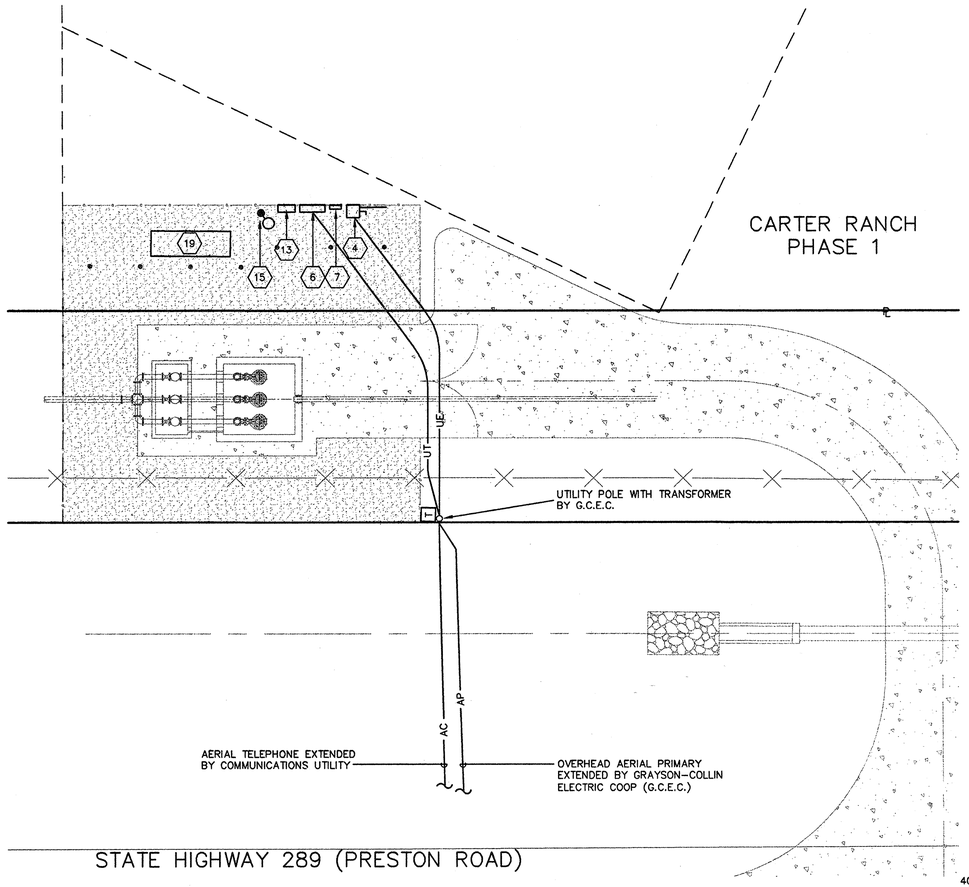

1 / 69 SITE PLAN–LIFT STATION

SCALE: 1"= 10'-0"

SCALE (IN FEET) 0 5 10 20

LEGEND

SYMBOL	DESCRIPTION
—AC—	AERIAL TELEPHONE
—UT—	UNDERGROUND TELEPHONE
—UE—	UNDERGROUND ELECTRIC BY CONTRACTOR
—UT—	AERIAL PRIMARY
	MOTOR OVERLOAD
	CIRCUIT BREAKER
(T)	THERMOSTAT
[T]	POLE MOUNTED TRANSFORMER
	LIGHT FIXTURE

GENERAL NOTES

NOTE	DESCRIPTION
1.	ALL CONDUCTORS ARE STRANDED COPPER. #12 THWN AND ALL CONDUITS ARE 3/4" MINIMUM UNLESS NOTED OTHERWISE.
2.	INSTALL CONDUCTOR IN EVERY CONDUIT.
3.	ALL CONDUCTORS, CONDUIT, FITTINGS AND SUPPORTS SHALL BE LISTED AS SUITABLE FOR USE IN WET LOCATIONS.
4.	USE RAINPROOF BOLT-ON HUBS FOR CONDUIT PENETRATIONS TO ALL OUTDOOR ELECTRICAL ENCLOSURES.
5.	PROVIDE CONDUIT SEAL BUSINGS OZ GEDNEY P/N CSB1-150P-1 PENETRATING THE WET WELL WALLS.
6.	ALL UNDERGROUND CONDUIT SHALL BE HEAVY WALL SCHEDULE 40 BURIED 18" BELOW GRADE MINIMUM. ALL ABOVE GROUND CONDUIT SHALL BE GALVANIZED RIGID STEEL. TRANSITION CONDUIT ELBOWS SHALL BE PVC COATED RIGID STEEL.
7.	BOND ALL ENCLOSURES TO GROUND IN ACCORDANCE WITH NEC ARTICLE 250 USING APPROPRIATE CONNECTORS.
8.	USE GROUNDING TYPE INSULATED CONDUIT BUSHINGS FOR ALL CONDUITS 2" OR GREATER. AT LEAST ONE (1) CONDUIT PER EACH SEPARATE ENCLOSURE SHALL BE BONDED TO THE ENCLOSURE WITH A GROUNDING TYPE INSULATED BUSHING AND GROUND CONDUCTOR.
9.	PROVIDE NAMEPLATES FOR ALL PUMP CONTROL PANEL INTERIOR COMPONENTS AND CONTROL RELAYS. PROVIDE WIRE NUMBERS AT BOTH ENDS OF THE WIRE AND ON THE TERMINAL BLOCK.
10.	FOR MOUNTING PANELS, FABRICATE METAL FRAME RACK AND SECURE TO GROUND IN CONCRETE. BOND RACK TO SERVICE GROUND.
11.	PROVIDE PULL LINE IN EMPTY CONDUIT.
12.	ALL MOTOR FEEDER CIRCUIT BREAKERS ARE EITHER INVERSE-TIME OR MCP TYPE.
13.	MOTORS, LEVEL SWITCHES AND FLEXIBLE CORDS LOCATED IN THE WET WELL MUST BE LISTED FOR USE IN A HAZARDOUS ENVIRONMENT. CONDUIT SEALS SHALL BE USED FOR ALL CONDUITS PENETRATING THE WET WELL AND FLEXIBLE CORDS MUST BE APPROVED FOR EXTRA-HARD USAGE IN ACCORDANCE WITH NEC ARTICLE 501 FOR HAZARDOUS LOCATIONS.
14.	MINIMUM CIRCUIT SIZE SHALL BE 2 #12, #12GND.,-3/4"C. UNLESS OTHERWISE NOTED.

NOTES BY SYMBOL ⬡

NOTE	DESCRIPTION
1.	PROVIDE 3 #1/0, #4GND.,-2" CONDUIT TO UTILITY POLE. LEAVE SLACK WIRE AS REQUIRED BY THE UTILITY COMPANY. TERMINATE CONDUIT AS DIRECTED BY G.C.E.C.
2.	PROVIDE 3 #1/0, #4GND.,-2"CONDUIT.
3.	PROVIDE #4 GROUND WIRE TO COPPER CLAD STEEL GROUND WIRE.
4.	PROVIDE 200 AMPERE, 3 POLE, 600 VAC HEAVY DUTY NEMA 3R FUSED SAFETY SWITCH FOR SERVICE DISCONNECT SWITCH.
5.	INSTALL POWER COMPANY METER SOCKET AS REQUIRED.
6.	INSTALL HOFFMAN CAT. #907220FSD, NEMA 12, 2-DOOR CABINET. COMPLETE WITH RAIN SHIELDED, THERMOSTATICALLY CONTROLLED FAN, INTAKE AIR FILTERS AND RAIN SHIELDED EXHAUST LOUVERS FOR AIR CIRCULATION TO CONTROL COMPONENTS. PROVIDE ICE QUBE CAT. #IQ120 FP, 280CFM, 120VOLT FAN, AND ELECTROSTATIC FILTER OR EQUAL. PROVIDE LINE VOLTAGE THERMOSTAT (WHITE-RODGERS 179-1) TO TURN ON AT 80°F.
7.	TRANSIENT VOLTAGE SURGE SUPPRESSOR. PROVIDE CURRENT TECHNOLOGY MODEL SEL 300-277/480-29-DM OR APPROVED EQUAL. MOUNT EXTERNAL TO CONTROL PANEL. CONNECT TO 100A-2P BREAKER IN CONTROL PANEL WITH 3 #2, #6GND.,-1"C.
8.	PROVIDE ALARM DIALER EQUAL TO SENSAPHONE EXPRESS II OR APPROVED EQUAL. CONNECT TO LEVEL CONTROLLER, GENERATOR, AND ATS AS INDICATED. CONNECT TO TELEPHONE AS REQUIRED. REFER TO WIRING DIAGRAM ON SHEET 16.
9.	LIFT STATION LEVEL CONTROL/PUMP ALTERNATOR BY LIFT STATION EQUIPMENT SUPPLIER. INSTALL IN PANEL. CONNECT TO LEVEL SENSOR AND MOTOR STARTERS AS REQUIRED.
10.	150 WATT STRIP HEATER AND LINE VOLTAGE THERMOSTAT INSTALLED IN FLOOR OF CONTROL CABINET. SET THERMOSTAT TO TURN ON AT 40°F. HEATER SHALL BE VULCAN NO. OS1208-150A. HUMIDISTAT SHALL BE WHITE-RODGERS MODEL #179-1.
11.	SUBMERISBLE 7-CONDUCTOR MOTOR CABLES SHALL BE PROVIDED BY LIFT STATION MOTOR MANUFACTURER. INSTALL IN 2" CONDUIT.
12.	10 CORE CABLE FOR LEVEL SENSOR FURNISHED BY LIFT STATION SUPPLIER. INSTALL IN 2"C. BACK TO CONTROL PANEL AND CONNECT TO LEVEL CONTROLLER AS REQUIRED.
13.	INSTALL AUTOMATIC 150 AMPERE, 3 POLE TRANSFER SWITCH. PROVIDE RUSSELECTRIC RMTD1503CE IN NEMA 3R OR NEMA 4 ENCLOSURE OR APPROVED EQUAL.
14.	DUPLEX RECEPTACLE INSTALLED IN CAST METAL WEATHERPROOF BOX. PROVIDE COMPLETE WITH TAYMAC #20550 LOCKING COVER.
15.	PROVIDE POLE MOUNTED LIGHTING FIXTURE. FIXTURE SHALL BE LITHONIA #KSF1R3120WW09 PER/PE1 OR EQUAL. COMPLETE WITH 250 WATT CLEAR SUPER METAL HALIDE LAMP AND PHOTOCELL. INSTALL AT 20' ABOVE GROUND LEVEL ON 30' CLASS 4 TREATED WOOD UTILITY POLE. REFER TO DETAIL 3/69.
16.	PUMP MOTORS WILL BE UPGRADED TO 30HP EACH AT A FUTURE DATE. STARTERS WITHIN CONTROL PANEL ARE SIZED ACCORDINGLY.
17.	PROVIDE APC MODEL BR500I UPS SYSTEM TO POWER LEVEL CONTROLLER/PUMP ALTERNATOR.
18.	PROVIDE AMBER STROBE LIGHT CONNECTED TO ALARM OUTPUT OF DIALER. PROVIDE SQUARE D CAT. #XUBC8G8 PLUS MOUNTING ACCESSORIES.
19.	EMERGENCY GENERATOR, ONAN 100KW (MODEL 100DGDB) COMPLETE WITH BASE MOUNTED DOUBLE WALL FUEL TANK CONTAINING 8 HOURS OF FUEL, CRITICAL MUFFLER, STARTER, BATTERY CHARGER, BLOCK HEATER, AND OUTDOOR WEATHERPROOF ENCLOSURE, AND ANY OTHER EQUIPMENT REQUIRED FOR A COMPLETE OPERATING SYSTEM. SET GENERATOR ON 8" THICK CONCRETE PAD. PAD SIZE SHALL BE 6" LARGER THAN GENERATOR FOOTPRINT IN ALL DIRECTIONS.
20.	SQUARE D ALTISTART ATS 46D62N MOUNTED IN CONTROL ENCLOSURE.
21.	HAND-OFF-AUTO SWITCHES AND PILOT LIGHTS IN DOOR OF ENCLOSURE.
22.	LEVEL CONTROLLER FACE PLATE.
23.	PROVIDE 100 AMPERE FUSEHOLDERS AND REDUCERS.
24.	PANEL "A" SHALL BE 208/120 VOLT, 3PHASE, LOAD CENTER COMPLETE WITH 60 AMP-3 POLE MAIN CIRCUIT BREAKER, 10-20 AMP-1 POLE AND 1-50A-2P CIRCUIT BREAKERS.

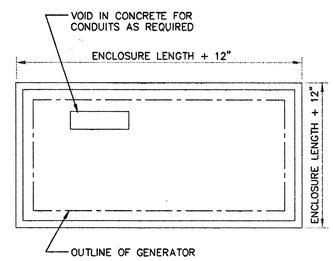

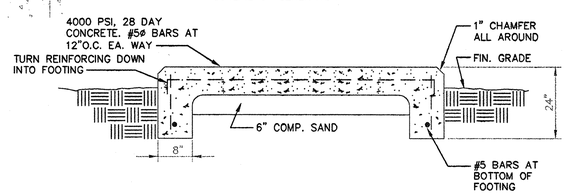

2 / XX GENERATOR PAD DETAIL

SCALE: NOT TO SCALE

CONNECTED LOAD SUMMARY

PUMP CONTROL PANEL			
MOTORS (2) 30HP	37FLA EA. @ 480V.	VA (INCLUDING 125% LARGEST MOTOR)	= 61,494
CONTROLS			= 500
GFCI RECEPTACLE/LIGHT			= 1,000
GENERATOR ACCESSORIES			=10,000
ACCESSORY PANELS			= 1,500
TOTAL VA			= 74,494
ESTIMATED DEMAND (AMPS)			= 90

NONCOINCIDENT LOAD PER NEC ART. 220-21, ONLY 2 PUMPS RUNNING DURING NORMAL OPERATION.

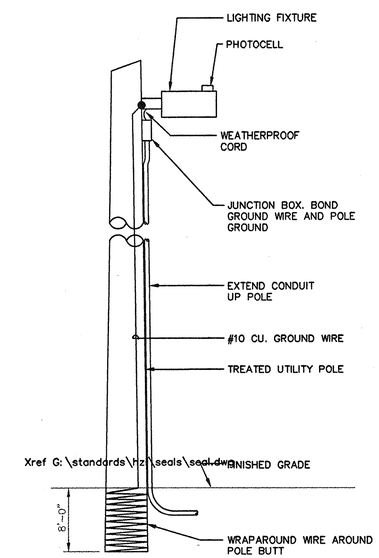

3 / 69 YARD LIGHTING DETAIL

SCALE: NOT TO SCALE

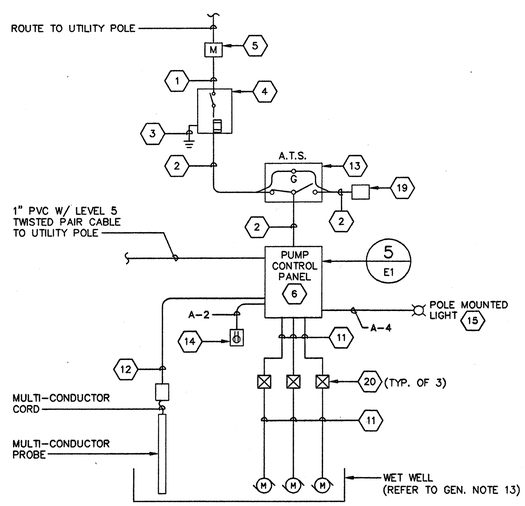

4 / 69 POWER RISER DIAGRAM

SCALE: NOT TO SCALE

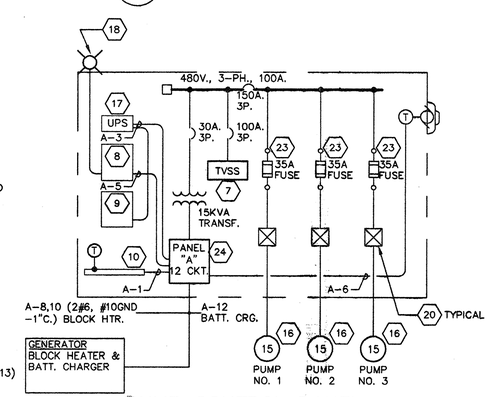

5 / 69 PUMP CONTROL PANEL – SINGLE LINE DIAGRAM

SCALE: NOT TO SCALE

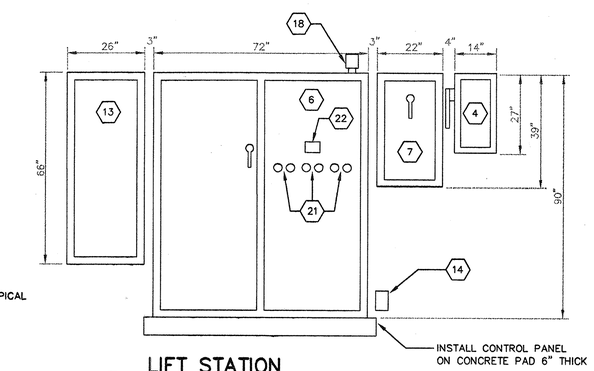

6 / 69 LIFT STATION CONTROL PANEL ELEVATION

SCALE: 1/2" = 1'-0"

NOTE:

PROVIDE UNISTRUT FRAME TO INSTALL ALL NON-FREE STANDING EQUIPMENT.

CITY OF CELINA, TEXAS
APPROVED FOR CONSTRUCTION
DATE: 10/3/03
BY: PAC

STATE OF TEXAS
RICHARD L. DICKERSON
69306
REGISTERED PROFESSIONAL ENGINEER
10/3/03

NO.	DATE	REVISIONS	APPROVED

CARTER RANCH

LIFT STATION NO. 2

SITE PLAN

CENTURION AMERICAN DEVELOPMENT GROUP

CELINA, TEXAS

HUITT-ZOLLARS

Huitt-Zollars, Inc.
3131 McKinney Avenue, Suite 600
Dallas, Texas 75204-2489
Phone (214) 871-3311
Fax (214) 871-0757
Dallas

DESIGN	DRAWN	DATE	SCALE	NOTES	FILE	NO.
HZI	HZI	OCT. 2003			01312223	18/20

01312223\DDI\CARTER RANCH - PHASE I\DWG\ \312223ESP01.dwg

SS-200310-01

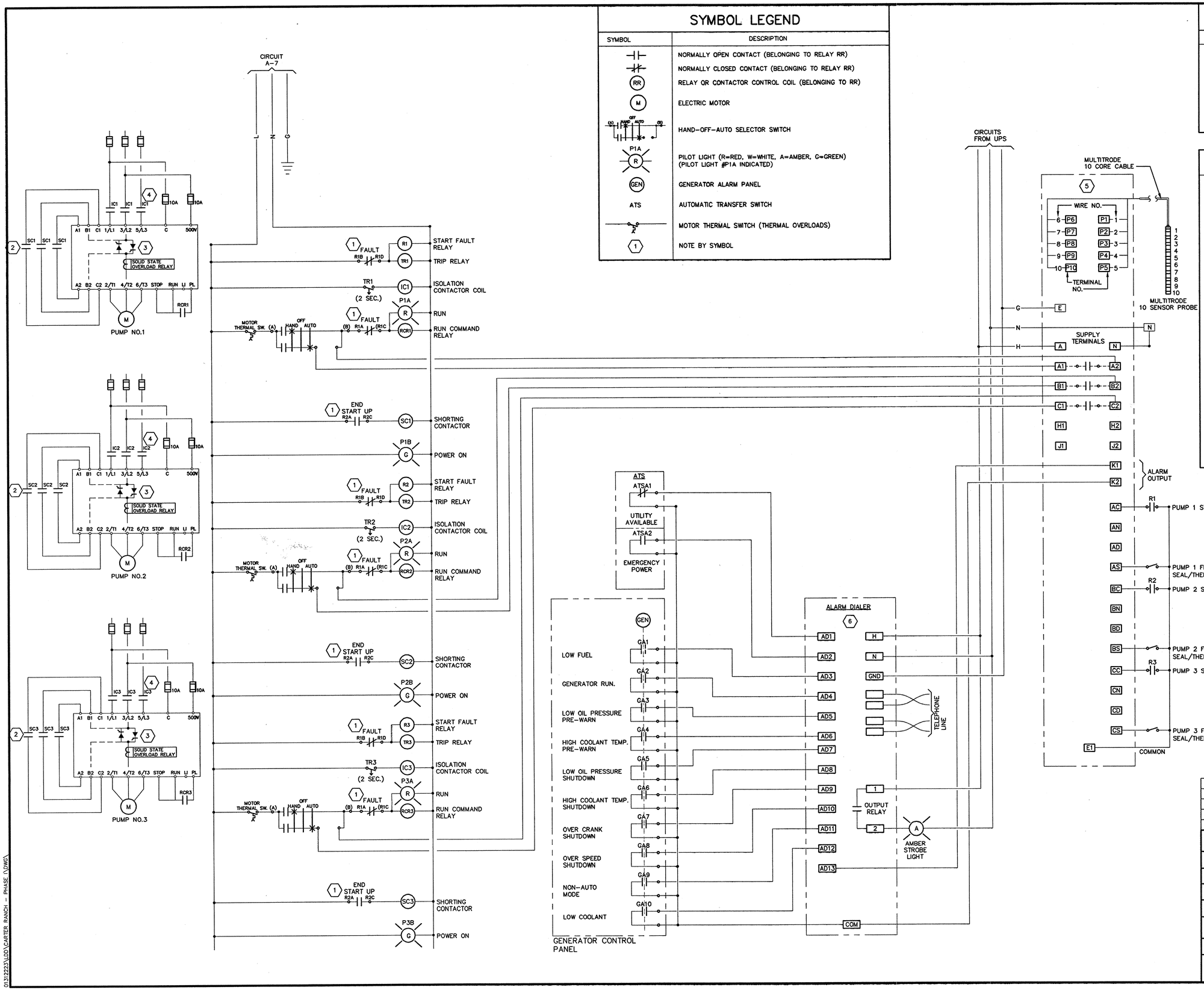

SYMBOL LEGEND

SYMBOL	DESCRIPTION
	NORMALLY OPEN CONTACT (BELONGING TO RELAY RR)
	NORMALLY CLOSED CONTACT (BELONGING TO RELAY RR)
RR	RELAY OR CONTACTOR CONTROL COIL (BELONGING TO RR)
M	ELECTRIC MOTOR
(A) HAND OFF AUTO (B)	HAND-OFF-AUTO SELECTOR SWITCH
P1A R	PILOT LIGHT (R=RED, W=WHITE, A=AMBER, G=GREEN) (PILOT LIGHT #P1A INDICATED)
GEN	GENERATOR ALARM PANEL
ATS	AUTOMATIC TRANSFER SWITCH
	MOTOR THERMAL SWITCH (THERMAL OVERLOADS)
1	NOTE BY SYMBOL

NOTES BY SYMBOL ⬡

NOTE	DESCRIPTION
1.	CONTACTS LOCATED ON STARTER.
2.	SHORTING CONTACTOR. SQUARE D #LC1 D4011G6.
3.	SQUARE D STARTER.
4.	ISOLATION CONTACTOR. SQUARE D #LC1 D4011G6.
5.	FLYGT LEVEL CONTROLLER. VERIFY EXACT SET POINTS.
6.	SENSAPHONE ALARM DIALER.

SEQUENCE OF OPERATION

LIFT STATION PUMP MOTORS MAY BE STARTED EITHER MANUALLY OR AUTOMATICALLY.

MANUAL STARTING (PUMP No. 1 – TYPICAL)
PLACING THE HAND-OFF-AUTOMATIC SWITCH IN THE "HAND" POSITION ENERGIZES RUN COMMAND RELAY RCR1 WHICH CLOSES THE STARTING CONTACTS RCR1 CONNECTED TO THE TERMINALS "STOP", "RUN", AND "PL" OF THE ALTISTART 46 CONTROLLER.

AUTOMATIC STARTING (PUMP No. 1 – TYPICAL)
PLACING THE HAND-OFF-AUTOMATIC SELECTOR SWITCH IN THE "AUTO" POSITION ALLOWS THE FLYGT LEVEL CONTROLLER TO START THE PUMP WHEN THE WATER LEVEL REACHES A PRESELECTED POINT ON THE 10 SENSOR PROBE. CONTACTS IN THE FLYGT CONTROLLER CLOSE ENERGIZING RUN COMMAND RELAY RCR1 WHOSE CONTACTS CLOSE STARTING THE PUMP.

SHORTING CONTACTOR OPERATION
WHEN THE PUMP MOTOR ACCELERATES TO ITS MAXIMUM SPEED THE ALTISTART'S R2 CONTACTS CLOSE ENERGIZING THE SHORTING CONTACTOR WHICH CLOSES AND CARRIES THE FULL MOTOR CURRENT. WHEN THE ALTISTARTIS SIGNALED TO STOP, THE ALTISTART'S R2 CONTACTS OPEN, CAUSING THE SHORTING CONTACTOR TO OPEN AND ALLOWS TO PUMP TO BE DECELERATED BY THE ALTISTART.

ALARMS
ALARMS ARE CAUSED BY FAILURE OF THE PUMP SEAL OR THERMAL SWITCH, A FAULT IN THE STARTER, A LOSS OR RESTORATION OF NORMAL POWER AND FAILURE OF THE EMERGENCY GENERATOR.

PUMP FAILURE AND STARTER FAULTS ARE DRY CONTACT INPUTS TO THE FLYGT LEVEL CONTROLLER. THE ALARM OUTPUT OF THE FLYGT CONTROLLER IS CONNECTED TO THE SENSAPHONE ALARM DIALER. ALARM OUTPUTS OF THE AUTOMATIC TRANSFER SWITCH AND GENERATOR ARE CONNECTED DIRECTLY TO THE SENSAPHONE CONTROLLER. WHEN AN ALARM IS REGISTERED BY THE SENSAPHONE DIALER, IT CALLS A PRE-DEFINED NUMBER AND SENDS A RECORDED MESSAGE. DRY CONTACTS IN THE DIALER ALSO CLOSE ACTIVATING AN AMBER STROBE LIGHT MOUNTED ON THE EXTERIOR OF THE CONTROL PANEL.

CITY OF CELINA, TEXAS
APPROVED FOR CONSTRUCTION
DATE: 10/3/03
BY: PRC

STATE OF TEXAS
RICHARD L. DICKERSON
69306
REGISTERED PROFESSIONAL ENGINEER
8/26/03

NO.	DATE	REVISIONS	APPROVED

CARTER RANCH

LIFT STATION NO. 2

ELECTRICAL RISER DIAGRAM

CENTURION AMERICAN DEVELOPMENT GROUP

CELINA, TEXAS

HUITT-ZOLLARS

Huitt-Zollars, Inc. Dallas
3131 McKinney Avenue, Suite 600
Dallas, Texas 75204-2489
Phone (214) 871-3311 Fax (214) 871-0757

DESIGN	DRAWN	DATE	SCALE	NOTES	FILE	NO.
HZI	HZI	AUGUST 2003			01312223	19/20

01312223\DD\CARTER RANCH – PHASE 1\DWG\

SS-200310-01

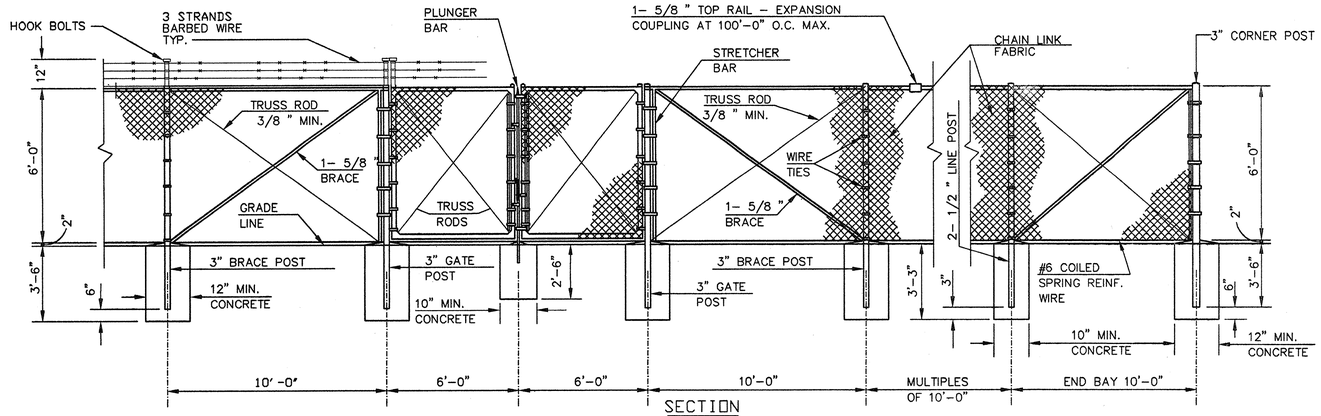

SECTION

1 CHAIN LINK FABRIC FENCE
SCALE: NONE

GENERAL NOTES:

1. ALL CHAIN LINK FENCING SHALL COMPLY WITH THE CHAIN LINK FENCE MANUFACTURERS INSTITUTE (CLFMI) "PRODUCT MANUAL" AND BE INSTALLED PER MANUFACTURERS RECOMMENDATIONS.
2. ALL FABRIC SHALL BE #9 GAUGE WIRE, WOVEN IN A 2" MESH WITH TOP AND BOTTOM EDGES TO BE TWISTED AND BARBED.
3. ALL FABRIC SHALL BE PVC COATED STEEL. SEE NOTE 8.
4. ALL POST AND RAIL MATERIAL SHALL BE TYPE I SCHEDULE 40 PIPE, PVC COATED.
5. GATE FRAMES SHALL BE MADE OF 2" TYPE I SCHEDULE 40 PIPE, COATED AS POST AND RAIL MATERIAL, FILLED WITH FABRIC TO MATCH THE LINE OF FENCE.
6. HEIGHT OF FENCE FABRIC SHALL BE MAXIMUM OF 6'–0".
7. THE ENTIRE FENCED AREA, INCLUDING ALL GATES, SHALL BE PROVIDED WITH DECORATIVE SLATTING. SLATTING SHALL BE P.D.S. BRAND, SLAT TYPE "L", AS MANUFACTURED BY A&B PLASTICS, INC., 50 W. ARLINGTON ST., YAKIMA, WASHINGTON, 98902 OR ENGINEER APPROVED EQUAL. SLATTING SHALL CARRY A FULL TEN (10) YEAR WARRANTY AGAINST FADING AND BREAKAGE. CONTRACTOR SHALL PROVIDE ALL WARRANTY DOCUMENTS TO THE CITY.
8. CONTRACTOR SHALL PROVIDE A COLOR CHART TO CITY ENGINEER AT LEAST 45 DAYS PRIOR TO INSTALLATION FOR COLOR SELECTION OF PVC COATING ON THE STEEL FABRIC AND THE DECORATIVE SLATTING.

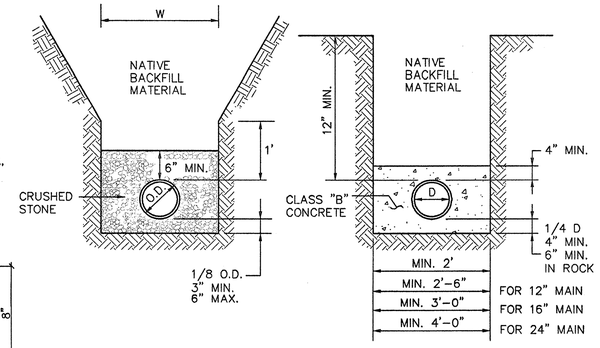

9 CLASS "H" EMBEDMENT
SCALE: NOT TO SCALE

10 CLASS "G" EMBEDMENT
SCALE: NOT TO SCALE

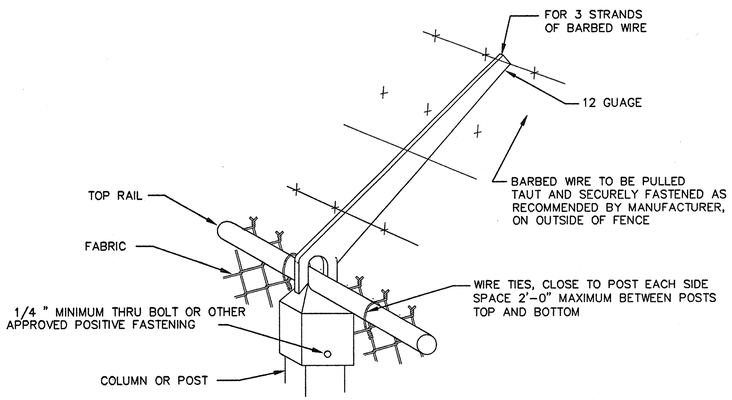

ARMS SIMILAR FOR TUBULAR POST OR H COLUMNS

2 EXTENSION ARM BARBED WIRE INSTALLATION
SCALE: NONE

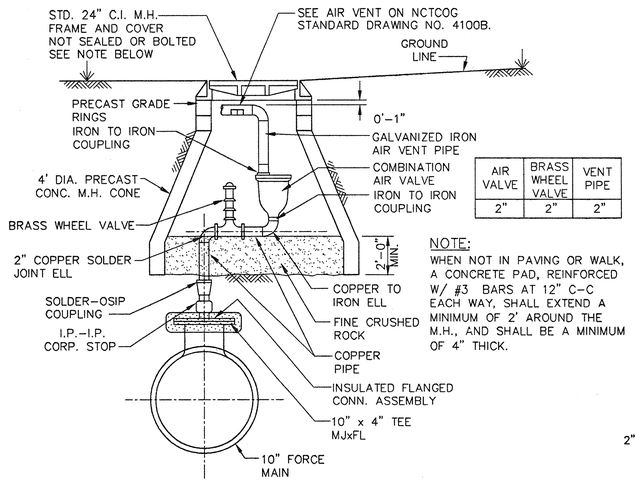

AIR VALVE	BRASS WHEEL VALVE	VENT PIPE
2"	2"	2"

NOTE:
WHEN NOT IN PAVING OR WALK, A CONCRETE PAD, REINFORCED W/ #3 BARS AT 12" C–C EACH WAY, SHALL EXTEND A MINIMUM OF 2' AROUND THE M.H., AND SHALL BE A MINIMUM OF 4" THICK.

5 2" COMBO AIR VALVE
SCALE: NOT TO SCALE

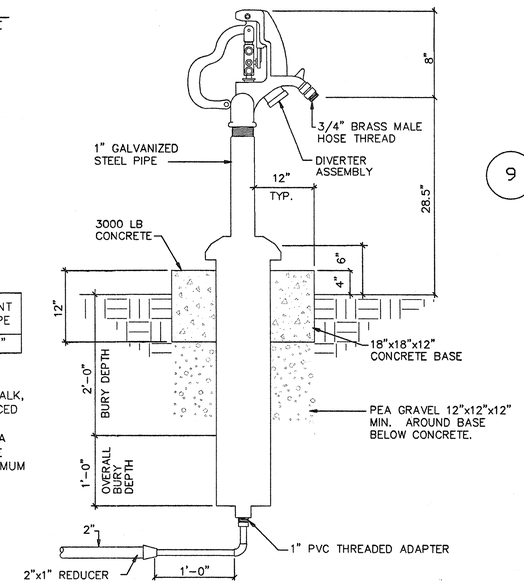

7 NON–FREEZE/POLLUTION PROOF YARD HYDRANT DETAIL
SCALE: NOT TO SCALE

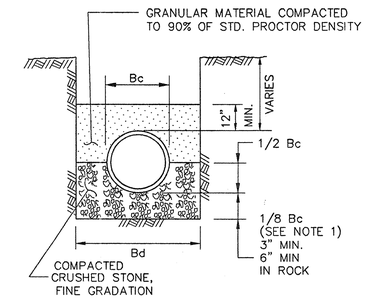

NOTES:

1. FOR MAINS 42" DIAMETER AND LARGER LARGER, 1/8 Bc SHALL BE TAKEN AS 6".
2. Bc = OUTSIDE DIAMETER OF PIPE
3. Bd = TRENCH WIDTH

8 CLASS "B+" EMBEDMENT
SCALE: NOT TO SCALE

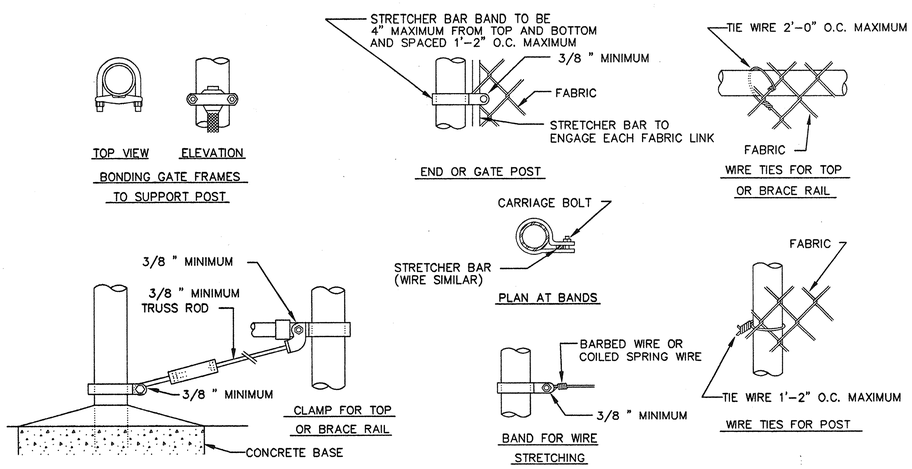

SIMILAR FOR TUBULAR POST OR H COLUMNS

3 FASTENING DETAILS
SCALE: NONE

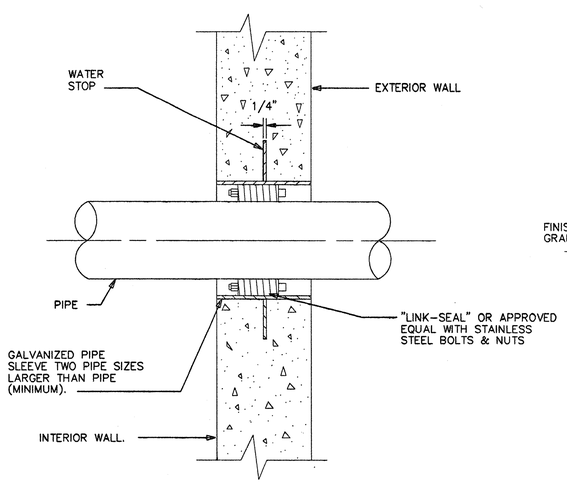

4 TYPICAL PIPE THRU EXTERIOR WALL – BELOW GRADE DETAIL
SCALE: NOT TO SCALE

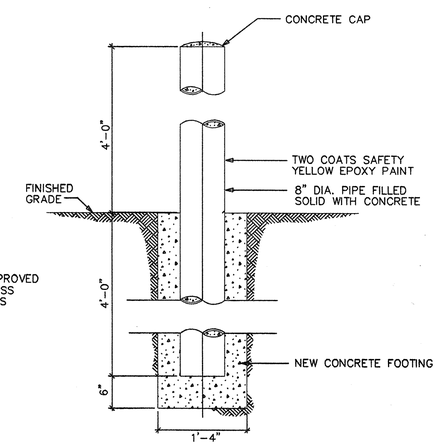

6 TYPICAL BOLLARD DETAIL
SCALE: NOT TO SCALE

CITY OF CELINA, TEXAS
APPROVED FOR CONSTRUCTION
DATE: 10/31/03
BY: PAC

STATE OF TEXAS
SANFORD W. CASE
59993
REGISTERED PROFESSIONAL ENGINEER
10-2-03

NO.	DATE	REVISIONS	APPROVED

CARTER RANCH
LIFT STATION NO. 2
FENCE, LIFT STATION & FORCE MAIN DETAILS
CENTURION AMERICAN DEVELOPMENT GROUP
CELINA, TEXAS

HUITT-ZOLLARS
Huitt-Zollars, Inc. Dallas
3131 McKinney Avenue, Suite 600
Dallas, Texas 75204-3489
Phone (214) 871-3311 Fax (214) 871-0757

DESIGN	DRAWN	DATE	SCALE	NOTES	FILE	NO.
HZI	HZI	OCT. 2003			01312223	20/20

SS-200310-01

GENERAL NOTES

NOTE	DESCRIPTION
1.	BEFORE COMMENCING ANY ACTIVITY UNDER OR PERTAINING TO THIS CONTRACT, THE CONTRACTOR SHALL NOTIFY THE OWNER 48 HOURS BEFORE COMMENCING CONSTRUCTION.
2.	THE CONTRACTOR SHALL NOTIFY THE OWNER AT ONCE IF ANY CONFLICT IS DISCOVERED BETWEEN ACTUAL FIELD CONDITIONS AND THE CONSTRUCTION PLANS.
3.	THE CONTRACTOR SHALL ASSUME ALL RESPONSIBILITY FOR ANY DAMAGE TO ANY EXISTING OR NEWLY CONSTRUCTED BUILDING, PAVEMENT, SIDEWALK, LANDSCAPING, FENCING, UTILITIES, OR ANY OTHER PUBLICLY OR PRIVATELY OWNED IMPROVEMENT, AND SHALL REPAIR, REPLACE OR OTHERWISE PROVIDE FOR RESTORATION OF SAME TO ITS ORIGINAL CONDITION AT NO ADDITIONAL COST TO THE OWNER.
4.	THE CONTRACTOR SHALL ACCURATELY LOCATE AND MARK CONSTRUCTION LIMITS AND PROPERTY LINES, AND SHALL LIMIT ALL CONSTRUCTION ACTIVITIES TO WHICHEVER APPLICABLE.
5.	THE CONTRACTOR SHALL MAINTAIN A SET OF CONSTRUCTION PLANS WHEREIN AN ACCURATE RECORD SHALL BE KEPT OF AS-CONSTRUCTED INFORMATION ON ALL SITE IMPROVEMENTS. THIS PLAN SET SHALL BE SUBMITTED TO THE OWNER'S REPRESENTATIVE AT THE COMPLETION OF CONSTRUCTION FOR USE IN THE PREPARATION OF RECORD DRAWINGS.
6.	THE CONTRACTOR SHALL SCHEDULE ALL INSPECTIONS AND TESTS A MINIMUM OF 48 HOURS IN ADVANCE. AT THE COMPLETION OF CONSTRUCTION, A FINAL INSPECTION SHALL VERIFY COMPLETION OF ALL SITE IMPROVEMENTS IN ADHERENCE WITH PLANS.
7.	ALL WORK SHALL COMPLY WITH THE NORTH CENTRAL TEXAS COUNCIL OF GOVERNMENTS (N.C.T.C.O.G.) STANDARD SPECIFICATIONS FOR PUBLIC WORKS CONSTRUCTION.
8.	ALL DIMENSIONS ARE TO FACE OF CURB, FACE OF BLDG. OR EDGE OF CONCRETE, UNLESS NOTED OTHERWISE.

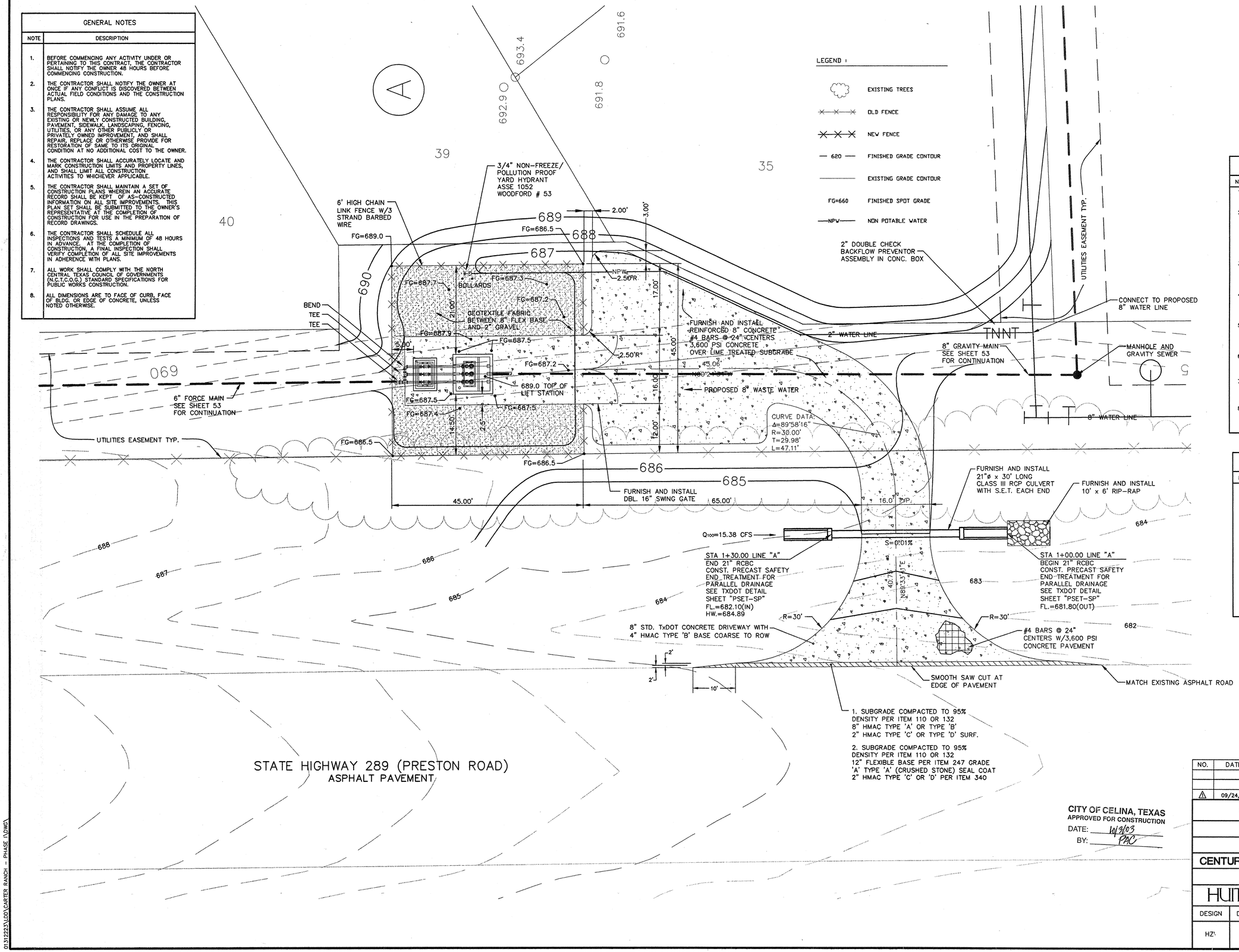

EROSION CONTROL

NOTE	DESCRIPTION
1.	CONTRACTOR SHALL INSTALL EROSION CONTROLS AS FIELD CONDITIONS WARRANT PRIOR TO COMMENCING ANY CONSTRUCTION ACTIVITY.
2.	AT A MINIMUM, PERIMETER CONTROLS SUCH AS SILT FENCE, AND/OR STRAW BALES SHALL BE INSTALLED AT ALL DOWN SLOPE BOUNDARIES AND AS WARRANTED WHERE UTILITY CONSTRUCTION, GRADING, OR OTHER CONSTRUCTION ACTIVITIES ARE TO BE PERFORMED. THE CONTRACTOR SHALL AT ALL TIMES TAKE SUCH MEASURES AS NECESSARY TO MINIMIZE OFF SITE TRACKING OR TRANSPORT OF SEDIMENT AND DEBRIS.
3.	THE CONTRACTOR SHALL BE REPONSIBLE FOR DAMAGES TO ADJACENT PROPERTIES OR TO RECEIVING WATERS CAUSED BY IMPROPERLY INSTALLED OR MAINTAINED EROSION CONTROL MEASURES.
4.	CONTRACTOR SHALL BE RESPONSIBLE FOR THE REMOVAL AND DISPOSAL OF ANY SILT DEPOSITS OR TRACKING BEYOND THE LIMITS OF CONSTRUCTION CAUSED BY THE CONTRACTOR'S OPERATIONS AND/OR FAILURE OF THE EROSION CONTROL MEASURES.
5.	CONTRACTOR SHALL REMOVE AND DISPOSE OF ACCUMULATED SILT AND SEDIMENT FROM EROSION CONTROL MEASURES WHEN IT REACHES A DEPTH OF 6" OR IMPAIRS THE EFFECTIVENESS OF THE MEASURES.
6.	ALL STOCKPILED SOILS WILL BE SURROUNDED BY A STRAW BALE DIKE, SILT FENCE, SEDIMENT CONTROL SWALE, OR EQUIVALENT MEASURE TO PROPERLY CONTROL SEDIMENT RUNOFF.
7.	ALL EROSION CONTROL DEVICES SHALL REMAIN IN PLACE AND FUNCTIONAL UNTIL PROJECT COMPLETION OR UNTIL CONTRIBUTING DRAINAGE AREAS HAVE BEEN FULLY STABILIZED.
8.	STABILIZATION: THE CONTRACTOR SHALL STABILIZE ANY AREA WHERE CONSTRUCTION ACTIVITY IS TEMPORARILY OR PERMANENTLY CEASED FOR MORE THAN 14 DAYS.

GENERAL NOTES

NOTE	DESCRIPTION
1.	ALL DISTURBED AREAS SHALL BE GRADED TO DRAIN AS INDICATED ON THE PLANS AND UPON COMPLETION OF CONSTRUCTION. NO DRAINAGE SHALL BE DAMMED OR TRAPPED UNLESS SPECIFICALLY DIRECTED BY THE PLANS.
2.	ALL FILL SHALL BE COMPACTED TO 95 PERCENT OF MAXIMUM DRY DENSITY AS OBTAINED BY STANDARD COMPACTION PROCEDURE (ASTM D-698). THE MOISTURE CONTENT OF THIS MATERIAL SHALL RANGE BETWEEN OPTIMUM AND PLUS OR MINUS 5 PERCENT OF OPTIMUM.
3.	CONTRACTOR SHALL SOD ALL DISTURBED SLOPES WITH BUFFALO GRASS TO STABILIZE SLOPE.
4.	CONTRACTOR IS RESPONSIBLE FOR LEGALLY DISPOSING OF EXCESS MATERIAL RESULTING FROM GRADING OPERATIONS.
5.	ALL WORK SHALL COMPLY WITH THE NORTH CENTRAL TEXAS COUNCIL OF GOVERNMENTS (N.C.T.C.O.G.) STANDARD SPECIFICATIONS FOR PUBLIC WORKS CONSTRUCTION.

STATE OF TEXAS
SANFORD W. CASE
69998
REGISTERED PROFESSIONAL ENGINEER
10-1-03

CITY OF CELINA, TEXAS
APPROVED FOR CONSTRUCTION
DATE: 10/2/03
BY: PAC

NO.	DATE	REVISIONS	APPROVED
1	09/24/03	REVISED DRIVEWAY ENTRANCE AND NOTES	

CARTER RANCH - PHASE I

LIFT STATION NO. 1

GRADING PLAN

CENTURION AMERICAN DEVELOPMENT GROUP

CELINA, TEXAS

HUITT-ZOLLARS
Huitt-Zollars, Inc. Dallas
3131 McKinney Avenue, Suite 600
Dallas, Texas 75204-2489
Phone (214) 871-3311 Fax (214) 871-0757

DESIGN	DRAWN	DATE	SCALE	NOTES	FILE	NO.
HZI	HZI	OCT. 2003			01312222	66

01312223\LDD\CARTER RANCH - PHASE I.DWG

SS-200310-01

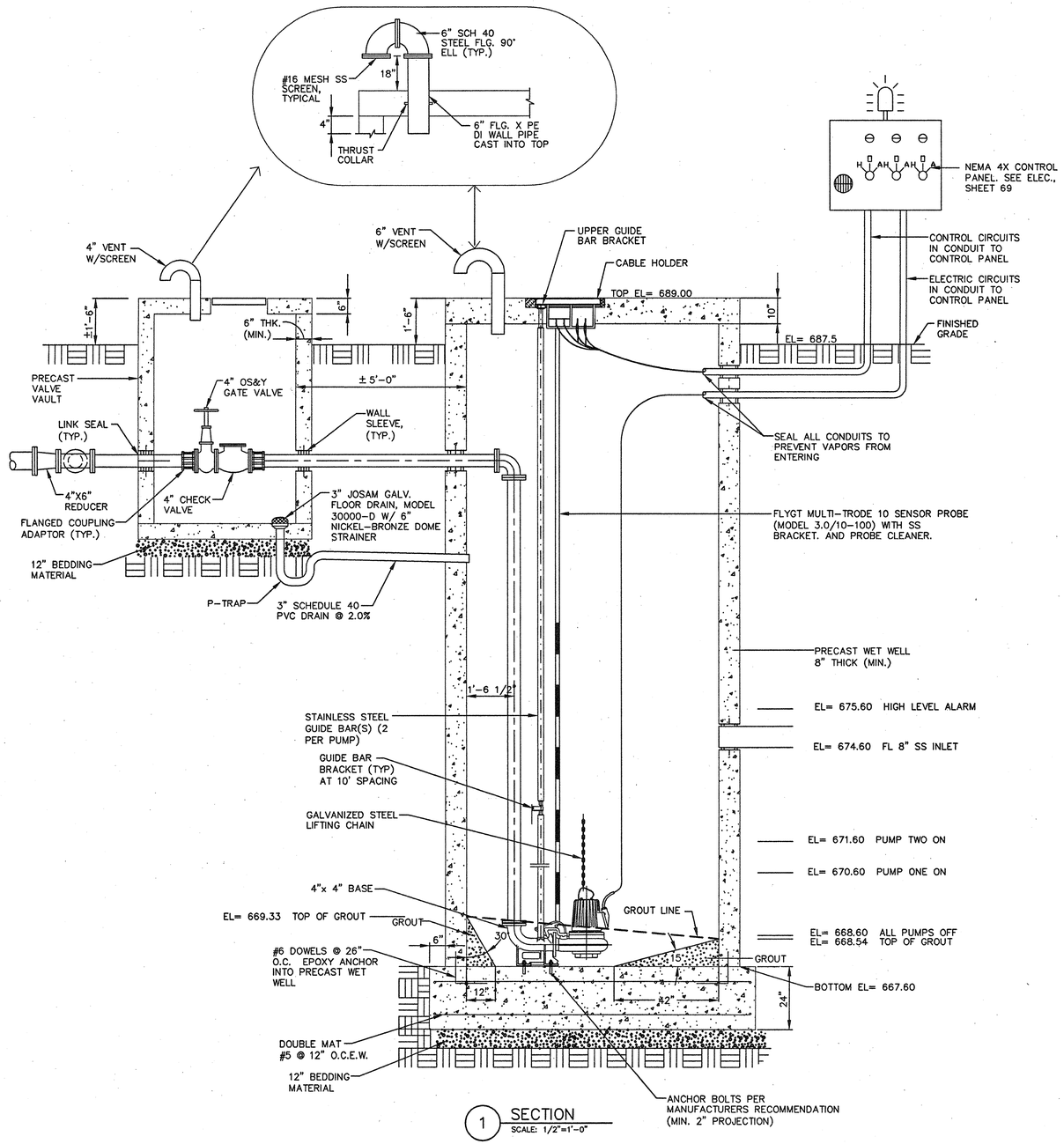

1 SECTION
SCALE: 1/2"=1'-0"

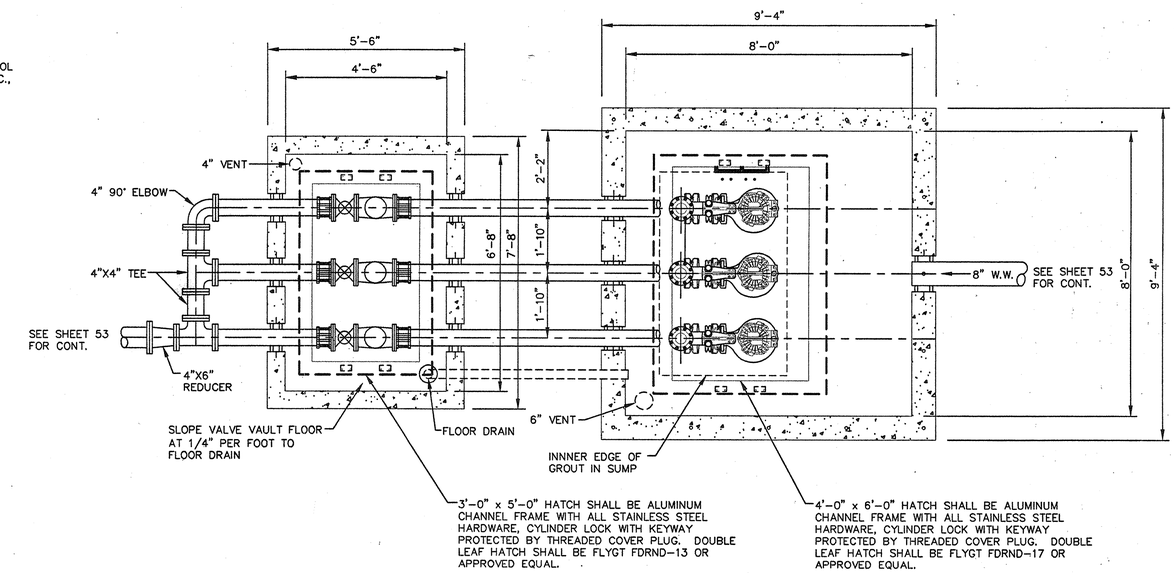

2 PLAN
SCALE: 1/2"=1'-0"

GENERAL NOTES

1. IN ORDER TO PREVENT SHEARING WITHIN THE BACKFILL AREAS, THE DISCHARGE PIPING SHALL BE DUCTILE IRON FROM THE LIFT STATION, THRU THE VALVE VAULT, AND ONE FULL PIPE JOINT INTO THE FORCE MAIN TRENCH.
2. ALL DUCTILE IRON PIPING SHALL BE ANSI/AWWA C115. FITTINGS SHALL BE ANSI/AWWA C110, DUCTILE IRON, FLANGED, STANDARD THICKNESS. JOINTS SHALL BE ANSI/AWWA C111, MECHANICAL JOINT. PIPE AND FITTINGS SHALL HAVE INTERNAL AND EXTERNAL EPOXY COATINGS. ALL BURIED DUCTILE IRON PIPING SHALL ALSO BE POLYETHYLENE ENCASED IN ACCORDANCE WITH AWWA C105.
3. ALL ELECTRICAL JUNCTION BOXES SHALL BE LOCATED OUTSIDE OF THE WET WELL BETWEEN THE CONTROL PANEL AND THE WET WELL. A SEAL COUPLING MAY BE USED IN LIEU OF A JUNCTION BOX. HOWEVER IT MUST BE LOCATED BETWEEN THE CONTROL PANEL AND THE WET WELL. ALL COMPONENTS WITHIN THE WET WELL SHALL BE EXPLOSION-PROOF.
4. WHERE PIPES OR CONDUIT PASS THRU THE WALL OF THE WET WELL, THE SPACE BETWEEN THE WET WELL AND THE PENETRATION SHALL BE SEALED WITH LINK SEALS.
5. THE FOUNDATION OF THE WET WELL SHALL REST ON UNDISTURBED SOIL. OVER EXCAVATION OF THE WET WELL FOUNDATION SHALL BE FILLED WITH 2,500 PSI CONCRETE TO THE ELEVATION SHOWN ON THE PLANS FOR THE BOTTOM OF THE WET WELL FOUNDATION.
6. CONTRACTOR SHALL GROUT OPENING FOR ACCESS FRAMES AND SUMP BOTTOM AS SHOWN. GROUT SHALL BE COMPATIBLE WITH SPECIFIED COATINGS.
7. COMPLETELY RESTRAIN ALL JOINTS FOR PIPE, BENDS, TEES AND FITTINGS ON THE FORCE MAIN PIPING WITHIN THE LIFT STATION SITE AND WITHIN 100 FEET OUTSIDE OF THE LIFT STATION FENCE.
8. NEMA 4X TRI-PLEX PUMP CONTROL PANEL SHALL ALTERNATE PUMP STARTING SEQUENCE, INTERFACE WITH LIQUID LEVEL SENSORS, CONTAIN MAIN DISCONNECT SWITCH, PILOT LIGHTS, RUN TIME METERS, HIGH LEVEL/PUMPFAIL ALARM LIGHT, ALARM HORN BATTERY BACK-UP, AUTO-DIALLER, AND HAVE UNDERWRITERS LABORATORY APPROVAL LABEL. PUMP CONTROLLER SHALL BE FLYGT MT3 PC3 OR APPROVED EQUAL.
9. PRECAST VAULTS SHALL BE A MINIMUM OF 4,000 PSI CONCRETE. WALL THICKNESSES SHALL MEET OR EXCEED THE MINIMUMS LISTED. MANUFACTURER SHALL VERIFY WALL THICKNESS AND PROVIDE ADEQUATE REINFORCING FOR PROPOSED DEPTHS.
10. BACKFILL AROUND THE WET WELL AND VALVE VAULT SHALL BE COMPACTED TO 95% STANDARD PROCTOR AT +/- 3% OF OPTIMUM MOSITURE.
11. ALL EXPOSED METALLIC PIPE AND FITTINGS WITHIN THE WET WELL AND VALVE VAULT SHALL BE COATED WITH A MINIMUM OF TWO 6.0 MIL COATS (12.0 MILS TOTAL DFT) OF DEVOE BAR-RUST 233H HIGH PERFORMANCE EPOXY COATING OR APPROVED EQUAL.
12. ALL DUCTILE IRON PIPING SHALL BE LINED WITH TWO 8.0 MIL COATS (16 MILS TOTAL DFT) OF TNEMEC SERIES 164 - COLOR EPOXOLINE 80 OR APPROVED EQUAL.
13. ALL CONCRETE AND GROUT SURFACES INSIDE THE WET WELL SHALL BE COATED WITH A 6.0 MILS DFT PRIME COAT OF TNEMEC SERIES 201 EPOXOPRIME, 125 MIL DFT OF TNEMEC SERIES 434 CHEMBLOCK H2S AND A 16 MIL DFT TOP COAT OF TNEMEC SERIES 435 CHEMGEL. ALL CONCRETE AND GROUT SHALL HAVE A MINIMUM OF 28 DAYS CURE PRIOR TO COATING APPLICATION. ABRASIVE BLAST ALL SURFACES TO TO SSPC-SP13/NACE 6 PRIOR TO COATING APPLICATION. FOLLOW MANUFACTURERS PUBLISHED APPLICATION INSTRUCTIONS.
14. CONFIGURE GROUT IN WET WELL BOTTOM PER PUMP MANUFACTURES RECOMMENDATION.

PUMP SCHEDULE

NO.	SERVICE/LOCATION	PUMP EFFICIENCY %	G.P.M. (EA)	PRESSURE (FT. HD.)	DISCHARGE SIZE (IN)	ELECTRICAL				REMARKS
						VOLTS	PHASE	RPM	HP (EA)	
P-1	SEWAGE PUMP/LIFT STATION #1	59.3%	255	46.9	4"	230	1	1743	7.5	NOTE #1, NOTE #2, NOTE #3
P-2	SEWAGE PUMP/LIFT STATION #1	59.3%	255	46.9	4"	230	1	1743	7.5	NOTE #1, NOTE #2, NOTE #3
P-3	SEWAGE PUMP/LIFT STATION #1	59.3%	255	46.9	4"	230	1	1743	7.5	NOTE #1, NOTE #2, NOTE #3

NOTES:
1. SUBMERSIBLE SEWAGE TYPE W/RAIL RETRIEVAL SYSTEM & MULTI-TRODE CONTROL/FLYGT #NP-3127-180-HT-61-489-00-3055 OR APPROVED EQUAL.
2. SCHEDULED NUMBERS FOR PUMP EFFIENCY, GPM AND PRESSURE REFLECT ONE PUMP IN OPERATION. WHEN TWO PUMPS ARE OPERATING THE NUMBERS ARE AS FOLLOWS: PUMP EFFICIENCY - 50.7%. GPM - 376 GPM TOTAL, 188 GPM EACH. PRESSURE - 53.5 FT.
3. PUMPS AND MOTORS SHALL BE EXPLOSION PROOF.

CITY OF CELINA, TEXAS
APPROVED FOR CONSTRUCTION
DATE: 10/3/03
BY: PAC

STATE OF TEXAS
SANFORD W. CASE
59993
REGISTERED PROFESSIONAL ENGINEER
4-15-03

NO.	DATE	REVISIONS	APPROVED

CARTER RANCH - PHASE I
LIFT STATION NO. 1
LIFT STATION PLAN AND SECTION
CENTURION AMERICAN DEVELOPMENT GROUP
CELINA, TEXAS

HUITT-ZOLLARS
Huitt-Zollars, Inc. Dallas
3131 McKinney Avenue, Suite 600
Dallas, Texas 75204-2489
Phone (214) 871-3311 Fax (214) 871-0757

DESIGN	DRAWN	DATE	SCALE	NOTES	FILE	NO.
HZI	HZI	APR. 2003			01312222	67

01312223\JOD\CARTER RANCH - PHASE I\DWG\

SS-200310-01

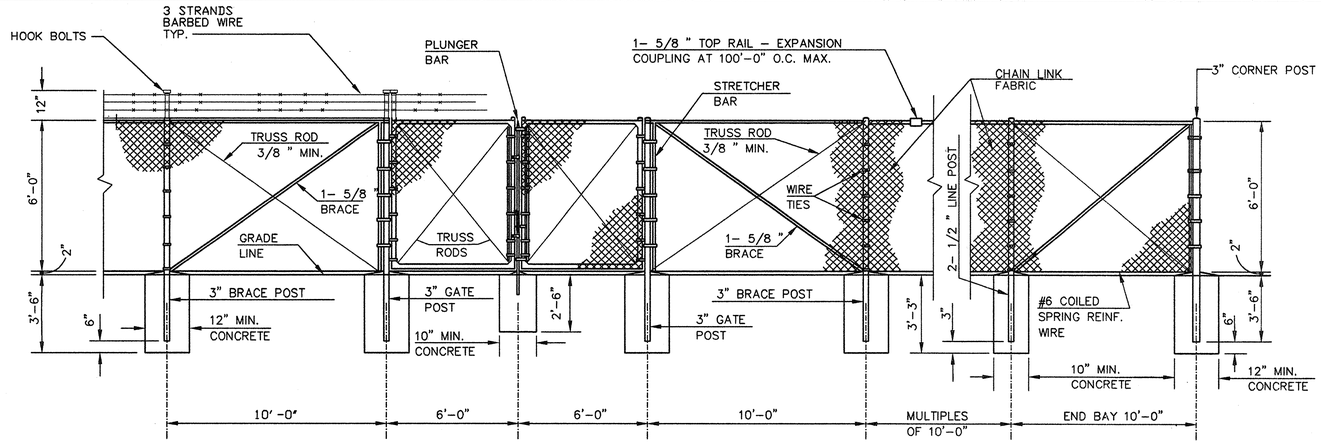

SECTION

1 CHAIN LINK FABRIC FENCE

SCALE: NONE

(6'-0" MAXIMUM HEIGHT)

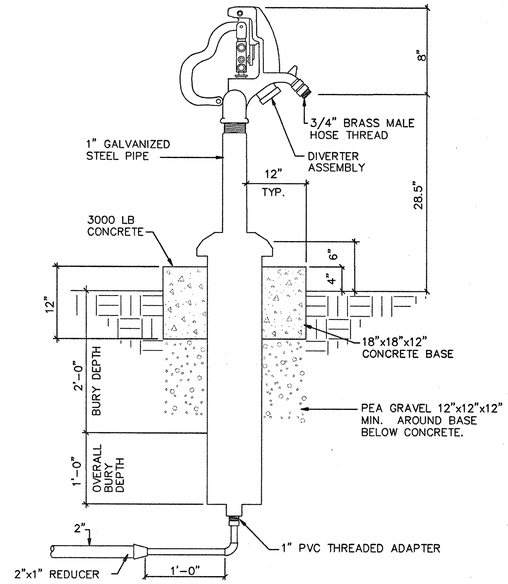

2 NON-FREEZE/POLLUTION PROOF YARD HYDRANT DETAIL

SCALE: NOT TO SCALE

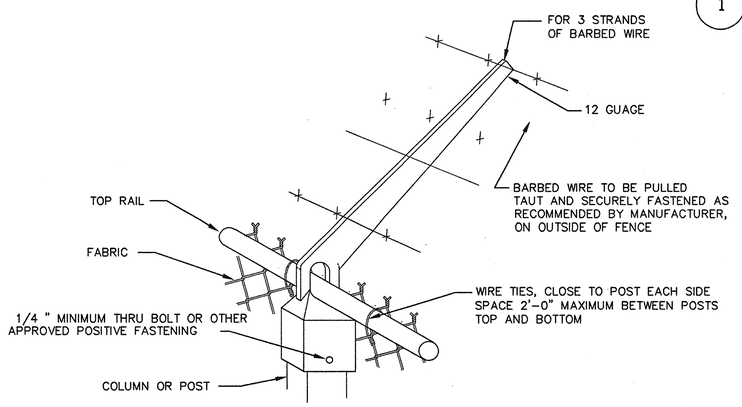

ARMS SIMILAR FOR TUBULAR POST OR H COLUMNS

2 EXTENSION ARM BARBED WIRE INSTALLATION

SCALE: NONE

GENERAL NOTES:

1. ALL CHAIN LINK FENCING SHALL COMPLY WITH THE CHAIN LINK FENCE MANUFACTURERS INSTITUTE (CLFMI) "PRODUCT MANUAL" AND BE INSTALLED PER MANUFACTURERS RECOMMENDATIONS.
2. ALL FABRIC SHALL BE #9 GAUGE WIRE, WOVEN IN A 2" MESH WITH TOP AND BOTTOM EDGES TO BE TWISTED AND BARBED.
3. ALL FABRIC SHALL BE PVC COATED STEEL. SEE NOTE 8.
4. ALL POST AND RAIL MATERIAL SHALL BE TYPE I SCHEDULE 40 PIPE, PVC COATED.
5. GATE FRAMES SHALL BE MADE OF 2" TYPE I SCHEDULE 40 PIPE, COATED AS POST AND RAIL MATERIAL, FILLED WITH FABRIC TO MATCH THE LINE OF FENCE. 1
6. HEIGHT OF FENCE FABRIC SHALL BE 6'-0".
7. THE ENTIRE FENCED AREA, INCLUDING ALL GATES, SHALL BE PROVIDED WITH DECORATIVE SLATTING. SLATTING SHALL BE P.D.S. BRAND, SLAT TYPE "L", AS MANUFACTURED BY A&B PLASTICS, INC., 50 W. ARLINGTON ST., YAKIMA, WASHINGTON, 98902 OR ENGINEER APPROVED EQUAL. SLATTING SHALL CARRY A FULL TEN (10) YEAR WARRANTY AGAINST FADING AND BREAKAGE. CONTRACTOR SHALL PROVIDE ALL WARRANTY DOCUMENTS TO THE CITY.
8. CONTRACTOR SHALL PROVIDE A COLOR CHART TO CITY ENGINEER AT LEAST 45 DAYS PRIOR TO INSTALLATION FOR COLOR SELECTION OF PVC COATING ON THE STEEL FABRIC AND THE DECORATIVE SLATTING.

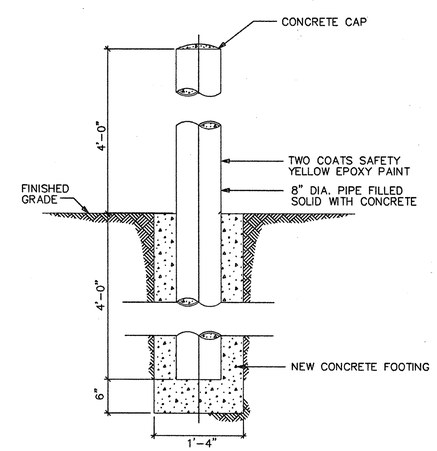

3 TYPICAL BOLLARD DETAIL

SCALE: NOT TO SCALE

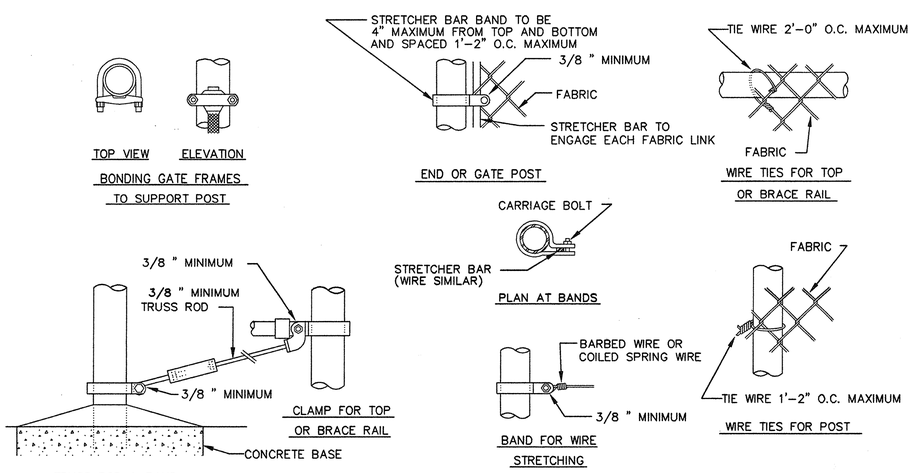

SIMILAR FOR TUBULAR POST OR H COLUMNS

3 FASTENING DETAILS

SCALE: NONE

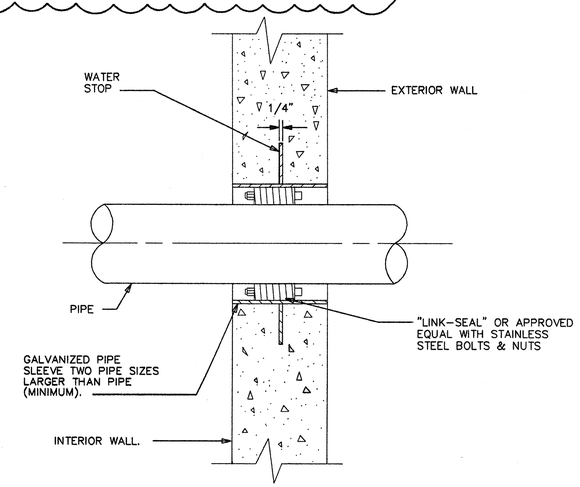

4 TYPICAL PIPE THRU EXTERIOR WALL - BELOW GRADE DETAIL

SCALE: NOT TO SCALE

STATE OF TEXAS
SANFORD W. CASE
59993
REGISTERED PROFESSIONAL ENGINEER
10-1-03

CITY OF CELINA, TEXAS
APPROVED FOR CONSTRUCTION
DATE: 10/3/03
BY: PAC

NO.	DATE	REVISIONS	APPROVED
1	09/24/03	MODIFIED FENCE NOTES TO INCLUDE DECORATIVE SLATS	

CARTER RANCH - PHASE I

LIFT STATION NO. 1

FENCE & LIFT STATION DETAILS

CENTURION AMERICAN DEVELOPMENT GROUP

CELINA, TEXAS

HUITT-ZOLLARS

Huitt-Zollars, Inc. 3131 McKinney Avenue, Suite 800 Dallas, Texas 75204-2486 Phone (214) 871-3311 Fax (214) 871-0757 Dallas

DESIGN	DRAWN	DATE	SCALE	NOTES	FILE	NO.
HZI	HZI	APR. 2003			01312222	68

01312223\DD\CARTER RANCH - PHASE I\DWG\

SS-200310-01

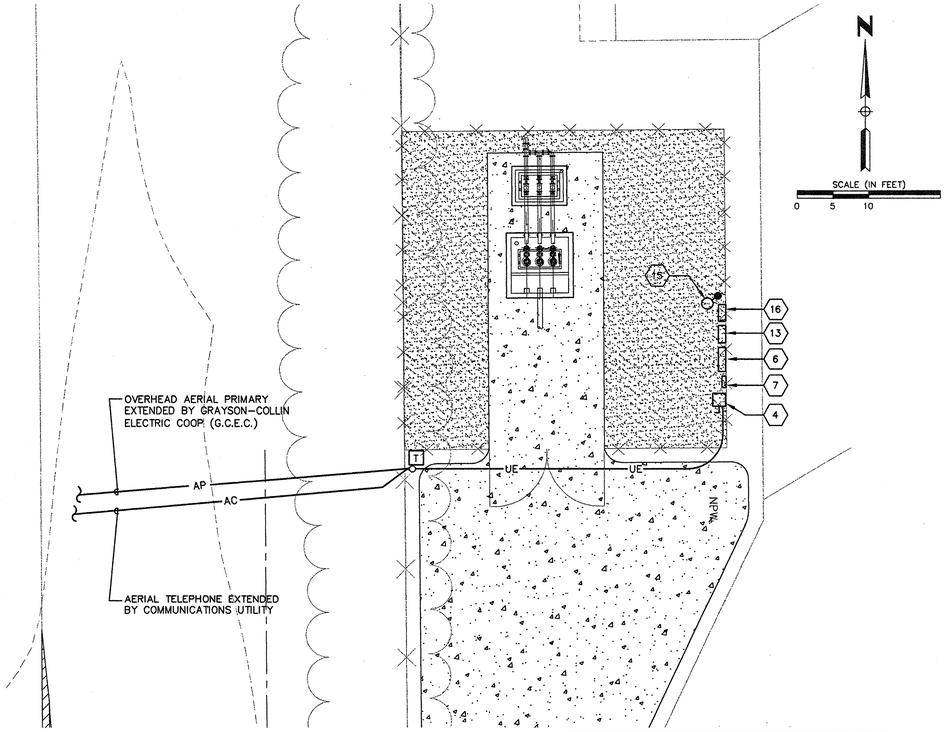

1 / 69 SITE PLAN–LIFT STATION

SCALE: 1"= 10'–0"

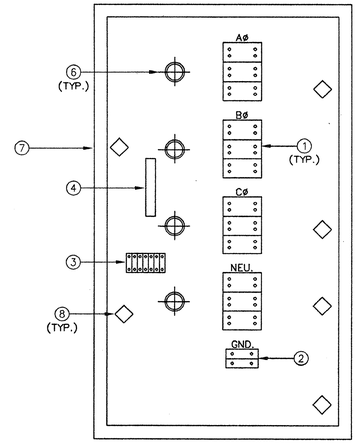

ITEM	NO.	PART NO.	DESCRIPTION
1	4	68092	GOULD SHAWMUT, 3–POLE #4–500MCM DISTRIBUTION BLOCK
2	1	66002	GOULD SHAWMUT, 2–POLE #6–350MCM DISTRIBUTION BLOCK
3	2	62103	GOULD SHAWMUT, 3–POLE #14–#4 AWG, DISTRIBUTION BLOCK
4	1	----	BUCHANAN, 16 POSITION #12 AWG TERMINAL BLOCK
5		----	NOT USED
6	4	----	2 1/2" PVC THROUGH–WALL NIPPLE
7	1	----	HOFFMAN, NEMA 3R ENCLOSURE W/ LOCK, BOTTOM CABLE TRAY ENTRY SLOT, AND 66"Hx36"Wx8"D MINIMUM
8	7	----	CABLE SUPPORT (STRAIN RELIEF) HARDWARE

THESE ITEMS MAY BE SUBSTITUTED WITH APPROVED EQUAL PARTS BY CONTRACTOR

2 / 69 GENERATOR CONNECTION BOX

SCALE: NOT TO SCALE

GENERAL NOTES

NOTE	DESCRIPTION
1.	ALL CONDUCTORS ARE STRANDED COPPER. #12 THWN AND ALL CONDUITS ARE 3/4" MINIMUM UNLESS NOTED OTHERWISE.
2.	INSTALL CONDUCTOR IN EVERY CONDUIT.
3.	ALL CONDUCTORS, CONDUIT, FITTINGS AND SUPPORTS SHALL BE LISTED AS SUITABLE FOR USE IN WET LOCATIONS.
4.	USE RAINPROOF BOLT–ON HUBS FOR CONDUIT PENETRATIONS TO ALL OUTDOOR ELECTRICAL ENCLOSURES.
5.	PROVIDE CONDUIT SEAL BUSINGS OZ GEDNEY P/N CSB1–150P–1 PENETRATING THE WET WELL WALLS.
6.	ALL UNDERGROUND CONDUIT SHALL BE HEAVY WALL SCHEDULE 40 BURIED 18" BELOW GRADE MINIMUM. ALL ABOVE GROUND CONDUIT SHALL BE GALVANIZED RIGID STEEL. TRANSITION CONDUIT ELBOWS SHALL BE PVC COATED RIGID STEEL.
7.	BOND ALL ENCLOSURES TO GROUND IN ACCORDANCE WITH NEC ARTICLE 250 USING APPROPRIATE CONNECTORS.
8.	USE GROUNDING TYPE INSULATED CONDUIT BUSHINGS FOR ALL CONDUITS 2" OR GREATER. AT LEAST ONE (1) CONDUIT PER EACH SEPARATE ENCLOSURE SHALL BE BONDED TO THE ENCLOSURE WITH A GROUNDING TYPE INSULATED BUSHING AND GROUND CONDUCTOR.
9.	PROVIDE NAMEPLATES FOR ALL PUMP CONTROL PANEL INTERIOR COMPONENTS AND CONTROL RELAYS. PROVIDE WIRE NUMBERS AT BOTH ENDS OF THE WIRE AND ON THE TERMINAL BLOCK.
10.	FOR MOUNTING PANELS, FABRICATE METAL FRAME RACK AND SECURE TO GROUND IN CONCRETE. BOND RACK TO SERVICE GROUND.
11.	PROVIDE PULL LINE IN EMPTY CONDUIT.
12.	ALL MOTOR FEEDER CIRCUIT BREAKERS ARE EITHER INVERSE–TIME OR MCP TYPE.
13.	MOTORS, LEVEL SWITCHES AND FLEXIBLE CORDS LOCATED IN THE WET WELL MUST BE LISTED FOR USE IN A HAZARDOUS ENVIRONMENT. CONDUIT SEALS SHALL BE USED FOR ALL CONDUITS PENETRATING THE WET WELL AND FLEXIBLE CORDS MUST BE APPROVED FOR EXTRA–HARD USAGE IN ACCORDANCE WITH NEC ARTICLE 501 FOR HAZARDOUS LOCATIONS.
14.	MINIMUM CIRCUIT SIZE SHALL BE 2 #12, #12GND.,–3/4"C. UNLESS OTHERWISE NOTED.

NOTES BY SYMBOL ⬡

NOTE	DESCRIPTION
1.	PROVIDE 3 #3/0, #4GND.,–2" CONDUIT TO UTILITY POLE. LEAVE SLACK WIRE AS REQUIRED BY THE UTILITY COMPANY. TERMINATE CONDUIT AS DIRECTED BY G.C.E.C.
2.	PROVIDE 3 #3/0, #4GND.,–2"CONDUIT.
3.	PROVIDE #4 GROUND WIRE TO COPPER CLAD STEEL GROUND WIRE.
4.	PROVIDE 200 AMPERE, 3 POLE, 250 VAC HEAVY DUTY NEMA 3R FUSED SAFETY SWITCH FOR SERVICE DISCONNECT SWITCH.
5.	INSTALL POWER COMPANY METER SOCKET AS REQUIRED.
6.	INSTALL HOFFMAN CAT. #A–62H48CLP NEMA 4, 2–DOOR CABINET. PROVIDE 3 – ALLEN BRADLEY BULLETIN 513 NEMA SIZE 1 COMBINATION STARTERS, 100 AMPERE, 120/240V., 1 PHASE PANELBOARD WITH 12–20AMP., 1 POLE CIRCUITS AND INSTALL LIQUID LEVEL CONTROLLER/ PUMP ALTERNATOR AND TELEPHONE DIALER. REFER TO DETAIL 5/69.
7.	TRANSIENT VOLTAGE SURGE SUPPRESSOR. PROVIDE CURRENT TECHNOLOGY MODEL SEL 300–120/240–29–DM OR APPROVED EQUAL. MOUNT EXTERNAL TO CONTROL PANEL. CONNECT TO 100A–2P BREAKER IN CONTROL PANEL WITH 3 #2, #6GND.,–1"C.
8.	PROVIDE ALARM DIALER EQUAL TO SENSAPHONE EXPRESS II OR APPROVED EQUAL. CONNECT TO LEVEL CONTROLLER AS REQUIRED . CONNECT TO TELEPHONE AS REQUIRED. MONITOR WET WELL LEVELS, HIGH LEVEL, PUMP FAILURE, LOSS OF POWER AND LOSS OF COMMUNICATIONS.
9.	LIFT STATION LEVEL CONTROL/PUMP ALTERNATOR BY LIFT STATION EQUIPMENT SUPPLIER. INSTALL IN PANEL. CONNECT TO LEVEL SENSOR AND MOTOR STARTERS AS REQUIRED.
10.	150 WATT STRIP HEATER AND LINE VOLTAGE HUMIDISTAT INSTALLED IN FLOOR OF CONTROL CABINET. SET HUMIDISTAT TO TURN ON AT 80 PERCENT HUMIDITY. HEATER SHALL BE VULCAN NO. OS1208–150A. HUMIDISTAT SHALL BE HONEYWELL NO. HA6C1000.
11.	SUBMERISBLE 7–CONDUCTOR MOTOR CABLES SHALL BE PROVIDED BY LIFT STATION MOTOR MANUFACTURER. INSTALL IN 2" CONDUIT.
12.	10 CORE CABLE FOR LEVEL SENSOR FURNISHED BY LIFT STATION SUPPLIER. INSTALL IN 2"C. BACK TO CONTROL PANEL AND CONNECT TO LEVEL CONTROLLER AS REQUIRED.
13.	INSTALL MANUAL 225 AMPERE, 2 POLE TRANSFER SWITCH. PROVIDE RUSSELECTRIC RMT–MAN 225ZE IN NEMA 3R OR NEMA 4 ENCLOSURE OR APPROVED EQUAL.
14.	DUPLEX RECEPTACLE INSTALLED IN CAST METAL WEATHERPROOF BOX. PROVIDE COMPLETE WITH TAYMAC #20550 LOCKING COVER.
15.	PROVIDE POLE MOUNTED LIGHTING FIXTURE. FIXTURE SHALL BE LITHONIA #KSF1R3120WW09 PER/PE1 OR EQUAL. COMPLETE WITH 250 WATT CLEAR SUPER METAL HALIDE LAMP AND PHOTOCELL. INSTALL AT 20' ABOVE GROUND LEVEL ON 30' CLASS 4 TREATED WOOD UTILITY POLE. REFER TO DETAIL 3/69.
16.	GENERATOR CONNECTION BOX FOR ROLL–UP PORTABLE GENERATOR SET. REFER TO DETAIL 2/69 ON THIS SHEET.
17.	PROVIDE APC MODEL BR500I UPS SYSTEM TO POWER LEVEL CONTROLLER/PUMP ALTERNATOR.
18.	PROVIDE AMBER STROBE LIGHT CONNECTED TO ALARM OUTPUT OF DIALER. PROVIDE SQUARE D CAT. #XUBC8G8 PLUS MOUNTING ACCESSORIES.

1

LEGEND

SYMBOL	DESCRIPTION
—AC—	AERIAL TELEPHONE
—UE—	UNDERGROUND ELECTRIC BY CONTRACTOR
—⌒—	MOTOR OVERLOAD
—⌒—	CIRCUIT BREAKER
(H)	HUMIDISTAT
[T]	POLE MOUNTED TRANSFORMER
●⌒	LIGHT FIXTURE

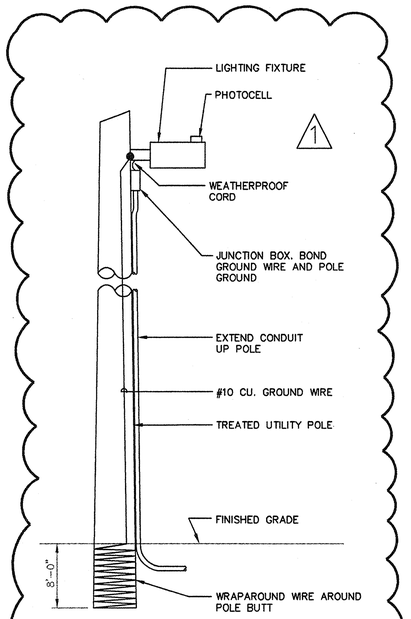

3 / 69 YARD LIGHTING DETAIL

SCALE: NOT TO SCALE

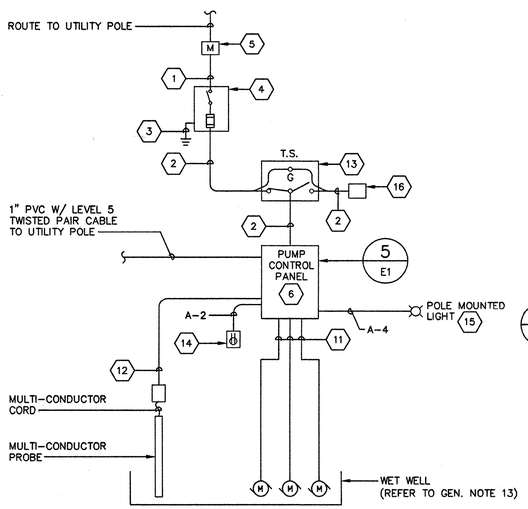

4 / 69 POWER RISER DIAGRAM

SCALE: NOT TO SCALE

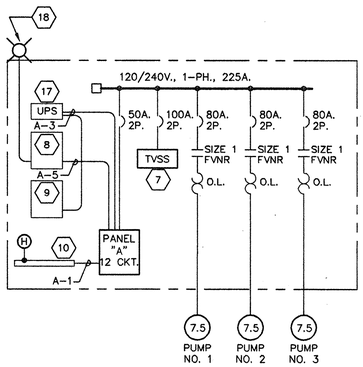

5 / 69 PUMP CONTROL PANEL – SINGLE LINE DIAGRAM

SCALE: NOT TO SCALE

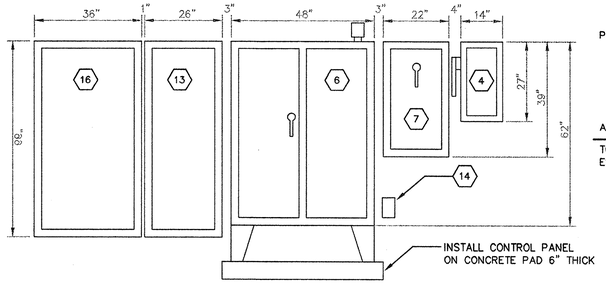

6 / 69 LIFT STATION CONTROL PANEL ELEVATION

SCALE: 1/2" = 1'–0"

NOTE :
PROVIDE UNISTRUT FRAME TO INSTALL ALL NON–FREE STANDING EQUIPMENT.

CONNECTED LOAD SUMMARY

PUMP CONTROL PANEL			
MOTORS (2) 7.5HP	40FLA EA. @ 240V.	VA (INCLUDING 125% LARGEST MOTOR)	= 21,600
CONTROLS			= 500
GFCI RECEPTACLE/LIGHT			= 1,000
ACCESSORY PANELS			= 1,500
TOTAL VA			= 24,600
ESTIMATED DEMAND (AMPS)			= 103

NONCOINCIDENT LOAD PER NEC ART. 220–21, ONLY 2 PUMPS RUNNING DURING NORMAL OPERATION.

MINIMUM SIZE STANDBY GENERATOR IS 50KW (62.5KVA)

CITY OF CELINA, TEXAS
APPROVED FOR CONSTRUCTION
DATE: 10/3/03
BY: PAC

STATE OF TEXAS
RICHARD L. DICKERSON
69306
REGISTERED PROFESSIONAL ENGINEER
10/2/03

NO.	DATE	REVISIONS	APPROVED
1	09/24/03	REVISED LIGHT FIXTURE DETAIL AND CALLOUT	

CARTER RANCH - PHASE I

LIFT STATION PLAN

CENTURION AMERICAN DEVELOPMENT GROUP

CELINA, TEXAS

HUITT-ZOLLARS

Huitt-Zollars, Inc.
3131 McKinney Avenue, Suite 600
Dallas, Texas 75204-2489
Phone (214) 871-3311 Fax (214) 871-0757
Dallas

DESIGN	DRAWN	DATE	SCALE	NOTES	FILE	NO.
HZ	HZI	AUGUST 2003	1"=10'		01312222	69

H:\Proj\01312222\Ldd\Carter Ranch–Phase I\dwg\312222esp01.dwg

SS-200310-01