CITY OF CELINA
WASTEWATER TREATMENT PLANT
EXPANSION

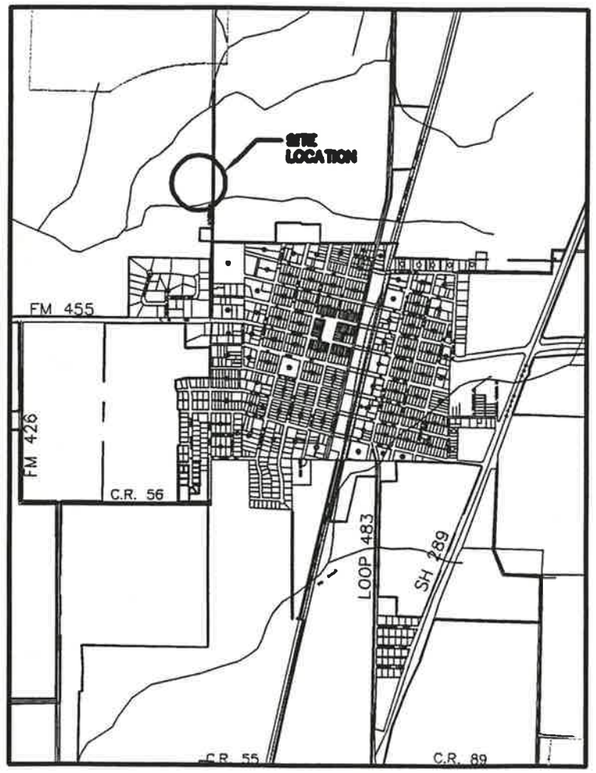

CITY OF
CELINA

PRELIMINARY - FOR REVIEW ONLY
These documents are for Design Review and not intended for Construction, Bidding or Permit purposes. They were prepared by, or under the supervision of:
MARK D. HILL PE 79446 19 NOV 01
Type or Print Name P.E. # Date

INDEX

SHEET NO.	TITLE	SHEET NO.	TITLE
1	COVER SHEET	19	CHLORINE CONTACT BASIN DETAILS
2	EXISTING SITE PLAN	20	SLUDGE DRYING BED RENOVATION PLAN
3	PROPOSED SITE PLAN	21	SLUDGE DRYING BED MEDIA, DRAIN, & UNDERWASH
4	HYDRAULIC PROFILE – SHEET 1 OF 2	22	SLUDGE DRYING BED SLUDGE FILTRATE DRAIN
5	HYDRAULIC PROFILE – SHEET 2 OF 2	23	POLYMER UNIT SHEET 1 OF 2
6	NON-POTABLE WATER PLAN	24	POLYMER UNIT SHEET 2 OF 2
7	HEADWORKS	25	OFFICE AND LAB BUILDING DETAILS
8	HEADWORKS STRUCTURAL	26	ELECTRICAL SYMBOLS AND ABBREVIATIONS Lighting
9	SBR PLAN AND SECTION	27	PROPOSED ELECTRICAL SITE PLAN
10	SBR MECHANICAL SECTIONS AND DETAILS 1 OF 2	28	ELECTRICAL ONE LINE DIAGRAM
11	SBR MECHANICAL SECTIONS AND DETAILS 2 OF 2	29	CONTROL CABINER SINGLE LINE DIAGRAM
12	SLUDGE PUMP ASSEMBLY	30	INSTRUMENTATION DIAGRAM
13	D.O. PROBE ASSEMBLY	31	CONDUIT LAYOUT DIAGRAM
14	DECANTER	32	OFFICE/LAB ELECTRICAL DETAILS
15	DECANTER/ACTUATOR DETAILS	33	MISCELLLANEOUS STRUCTURAL DETAILS
16	SBR STRUCTURAL SECTIONS AND DETAILS	34	STANDARD DETAILS – SEWER CONSTRUCTION
17	SBR / DIGESTER STRUCTURAL DETAILS	35	STANDARD DETAILS – WATER CONSTRUCTION
18	AEROBIC DIGESTER SECTIONS AND DETAILS		

GENERAL NOTES

1. The original plans for this project were prepared on full size standard sheets (24"x36"). The specific scale for the individual units would be true only on the original tracing. Reproduced copies, reductions or other methods of printing may change or alter the scale. The Engineer is not responsible for scale dimensions utilized by others on these plans.

2. It shall be the Contractor's responsibility to verify locations, elevations and dimensions of adjacent and/or conflicting utilities in advance of construction in order that adjustments can be made to provide adequate clearances, if required. The Contractor shall preserve and protect public utilities at all times during construction. Any damage to utilities resulting from the Contractor's operations shall be restored at his expense. The Engineer shall be notified when proposed facility grades conflict with existing utility grades.

3. All concepts, ideas, designs, arrangements, and plans indicated or represented by these instruments, as outlined on the title sheet index, and by any addendums are owned by and are the property of HUNTER ASSOCIATES TEXAS, LTD. and were created and developed for the use on and in connection with the specified project. These concepts, ideas, designs, arrangements or plans shall not be used by any person, firm or corporation for any purpose whatsoever without the written permission and consent of HUNTER ASSOCIATES TEXAS, LTD. of FRISCO, TEXAS.

JOB NO. 28924 * WASTEWATER TREATMENT PLANT EXPANSION * CELINA, COLLIN CO., TEXAS * AUGUST, 2001

MARK D. PETERMAN, MAYOR

CITY ALDERMEN

NELSON CARTER, MAYOR PRO TEM

FRED HELMS **BILLIE RAY HUDDLESTON**

BUD PHILLIPS **JIM LEWIS**

LARRY BARTLETT, CITY ADMINISTRATOR/PUBLIC WORKS DIRECTOR

VICKI FAULKNER, CITY SECRETARY

HUNTER ASSOCIATES TEXAS, LTD.
ENGINEERS/PLANNERS/SURVEYORS
DALLAS 214-385-9171 AUSTIN 512-454-8716 FRISCO 972-712-9400

PROJECT NO. 28924
TCDP NO. 720119

SS-200108-01

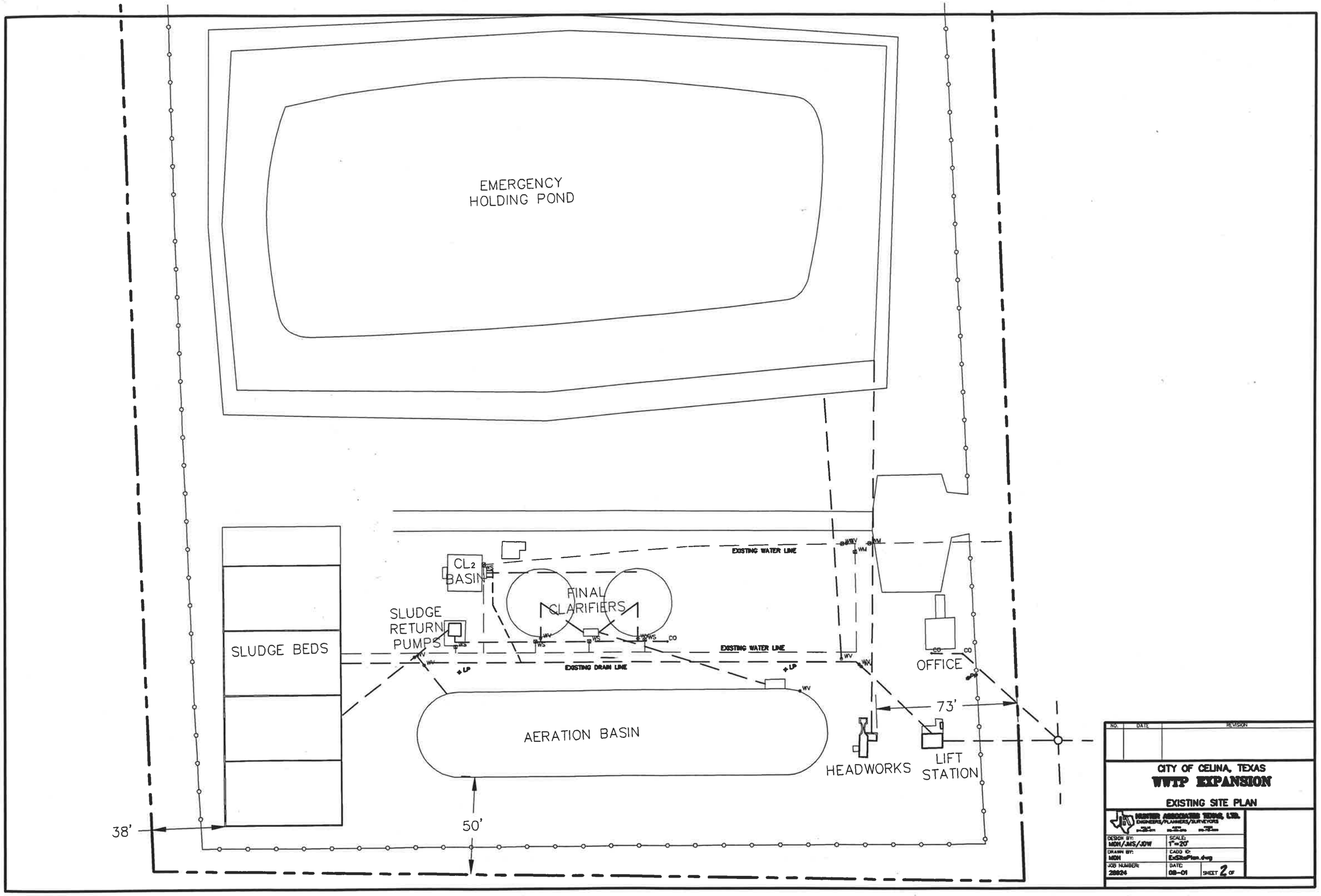
EMERGENCY
HOLDING POND
CL2
BASIN
FINAL
CLARIFIERS
SLUDGE
RETURN
PUMPS
SLUDGE BEDS
EXISTING WATER LINE
EXISTING WATER LINE
EXISTING DRAIN LINE
OFFICE
AERATION BASIN
HEADWORKS
LIFT
STATION
73'
38'
50'
NO.
DATE
REVISION
CITY OF CELINA, TEXAS
WWTP EXPANSION
EXISTING SITE PLAN
HUNTER ASSOCIATES TEXAS, LTD.
ENGINEERS/PLANNERS/SURVEYORS
DESIGN BY:
MDH/JMS/JOW
SCALE:
1"=20'
DRAWN BY:
MDH
CADD ID:
ExSitePlan.dwg
JOB NUMBER:
28824
DATE:
08-01
SHEET 2 OF

SS-200108-01

NOTE:
ALL YARD PIPING UNDER STRUCTURES SHALL BE DUCTILE IRON PIPE.
ALL OTHER YARD PIPING SHALL BE SDR-35 PVC FOR NON-PRESSURE PIPE AND SDR-26 PVC FOR PRESSURE PIPE.

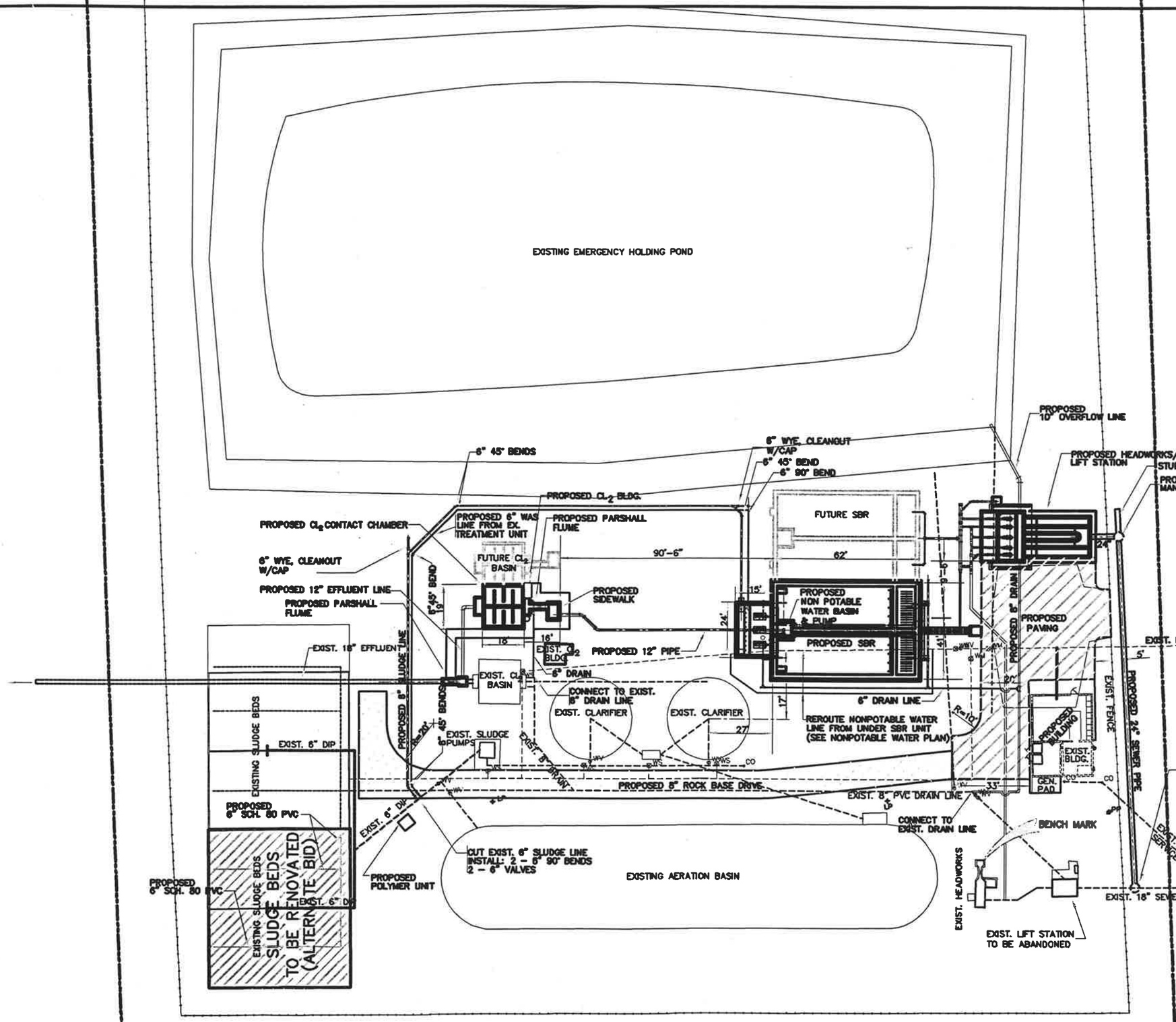

NOTE:
PROPOSED PAVING AREA SHALL BE 6" CONCRETE WITH NO. 3 BARS 18" O.C. AND 6" LIME TREATED SUBGRADE 33 LBS PER S.Y.

BENCH MARK:
TOP OF NORTHEAST CORNER OF EXIST. PARSHALL FLUME STRUCTURE
EL. = 661.56

NOTE:
SEE SHEET NO. 6 FOR NONPOTABLE WATER SYSTEM PLAN

20 10 0 20 40
SCALE: 1" = 20'

NO.	DATE	REVISION

CITY OF CELINA, TEXAS
WWTP EXPANSION
PROPOSED SITE PLAN

HUNTER ASSOCIATES TEXAS, LTD.
ENGINEERS/PLANNERS/SURVEYORS

DESIGN BY: MDH/JMS/JDW	SCALE: 1"=20'
DRAWN BY: MDH	CADD ID: SitePlan_revised.dwg
JOB NUMBER: 28824	DATE: 08-01 SHEET 3 OF

SS-200108-01

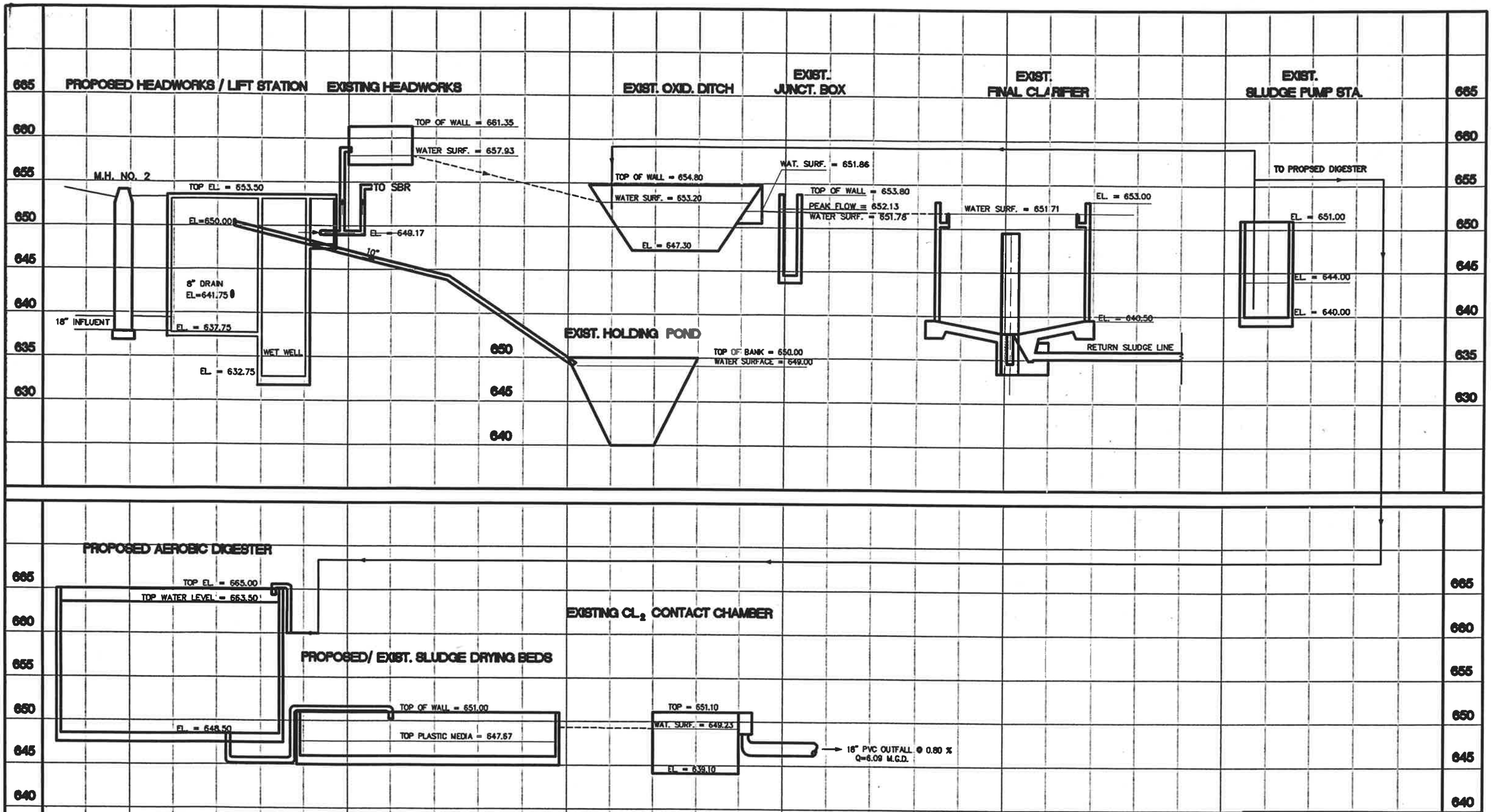

NO.	DATE	REVISION

CITY OF CELINA, TEXAS

WWTP EXPANSION

HYDRAULIC PROFILE – SHEET 1 OF 2

HUNTER ASSOCIATES TEXAS, LTD.
ENGINEERS/PLANNERS/SURVEYORS

DESIGN BY: MDH	SCALE: 1" = 10' H, 1" = 5' V
DRAWN BY: JDW	CADD ID: HYDPROF.dwg
JOB NUMBER: 26924	DATE: 06-01 SHEET 4 OF

SS-200108-01

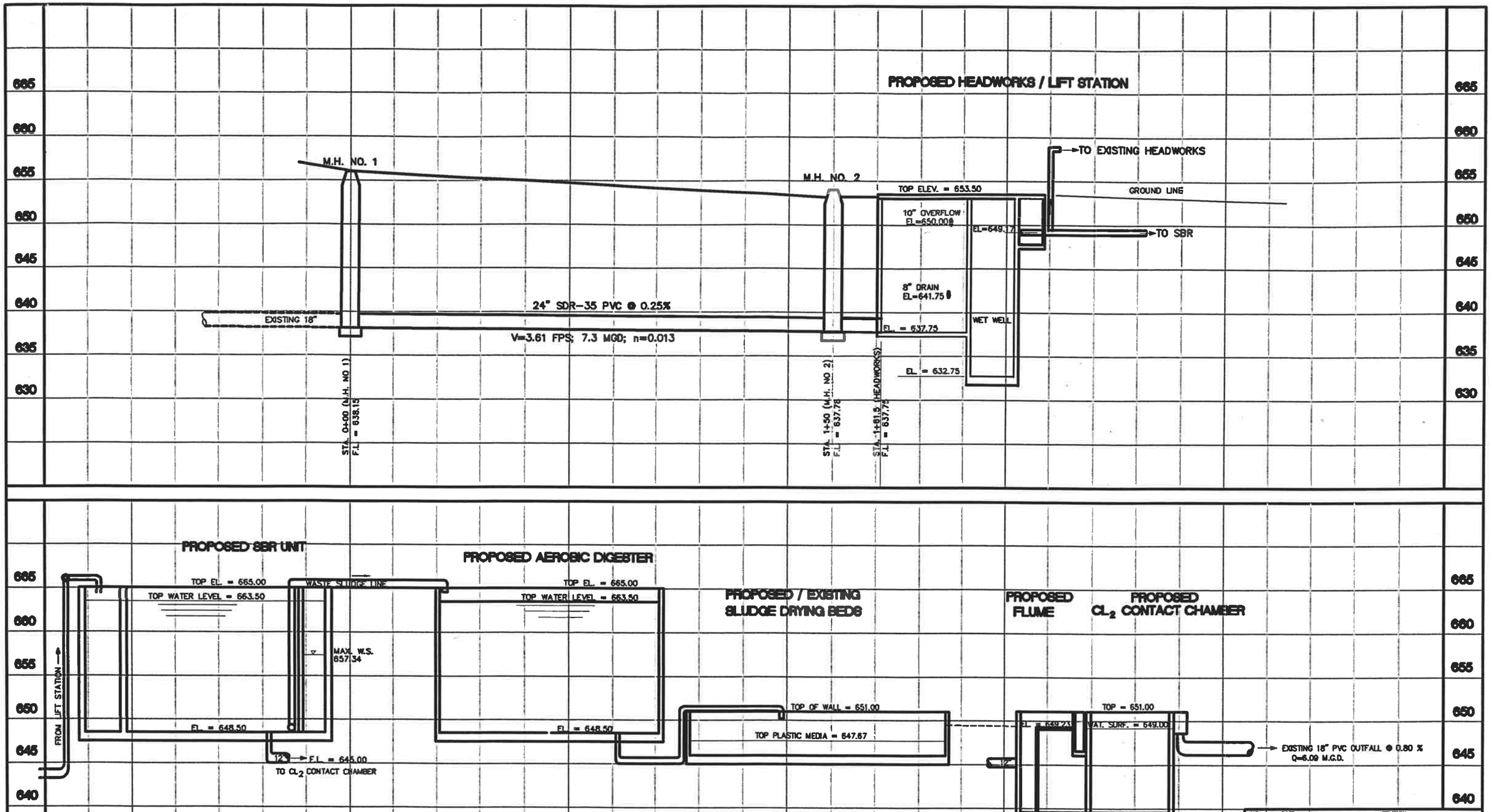

NO.	DATE	REVISION

CITY OF CELINA, TEXAS

WWTP EXPANSION

HYDRAULIC PROFILE – SHEET 2 OF 2

HUNTER ASSOCIATES TEXAS, LTD.
ENGINEERS/PLANNERS/SURVEYORS

DESIGN BY: MDH	SCALE: 1" = 10' H, 1" = 5' V
DRAWN BY: JDW	CADD ID: HYDPROF.dwg
JOB NUMBER: 28924	DATE: 08-01 SHEET 5 OF

SS-200108-01

EXISTING EMERGENCY HOLDING POND

N

PROPOSED NON POTABLE WATER BASIN & PUMP

PROPOSED NON POTABLE WATER PRESSURE TANK

PROPOSED

SBR

PROPOSED 2"

PROPOSED 2" WATER LINE

CUT AND TERMINATE POTABLE WATER EXTEND POTABLE WATER ONLY TO OFFICE/LAB BLDG.

EXIST. POTABLE WATER SUPPLY

H.B. 1"

H.B.

EXIST. Cl_2 BASIN

EXIST. Cl_2 BLDG.

CONNECT

EXIST. CLARIFIER

EXIST. CLARIFIER

REROUTE NON-POTABLE WATER LINE FROM UNDER SBR UNIT

FREEZE-PROTECT EXPOSED WATER LINE

EXIST. POTABLE WATER LINE CONVERT TO NON-POTABLE

PROPOSED BUILDING

EXIST. BLDG.

EXIST. FENCE

EXISTING SLUDGE BEDS

EXISTING AERATION BASIN

LEGEND

H.B. = PROPOSED HOSE BIB (NON FREEZE) (NON-POTABLE WATER SUPPLY)

= PROPOSED WATER LINE AND VALVE

20 10 0 20 40

SCALE: 1" = 20'

NO.	DATE	REVISION

CITY OF CELINA, TEXAS

WWTP EXPANSION

NON-POTABLE WATER PLAN

HUNTER ASSOCIATES TEXAS, LTD.
ENGINEERS/PLANNERS/SURVEYORS

DESIGN BY: MDH	SCALE: 1"=20'
DRAWN BY: MDH	CADD ID: Nonpotable_Water_Plan.dwg
JOB NUMBER: 28824	DATE: 08-01 SHEET 6 OF

SS-200108-01

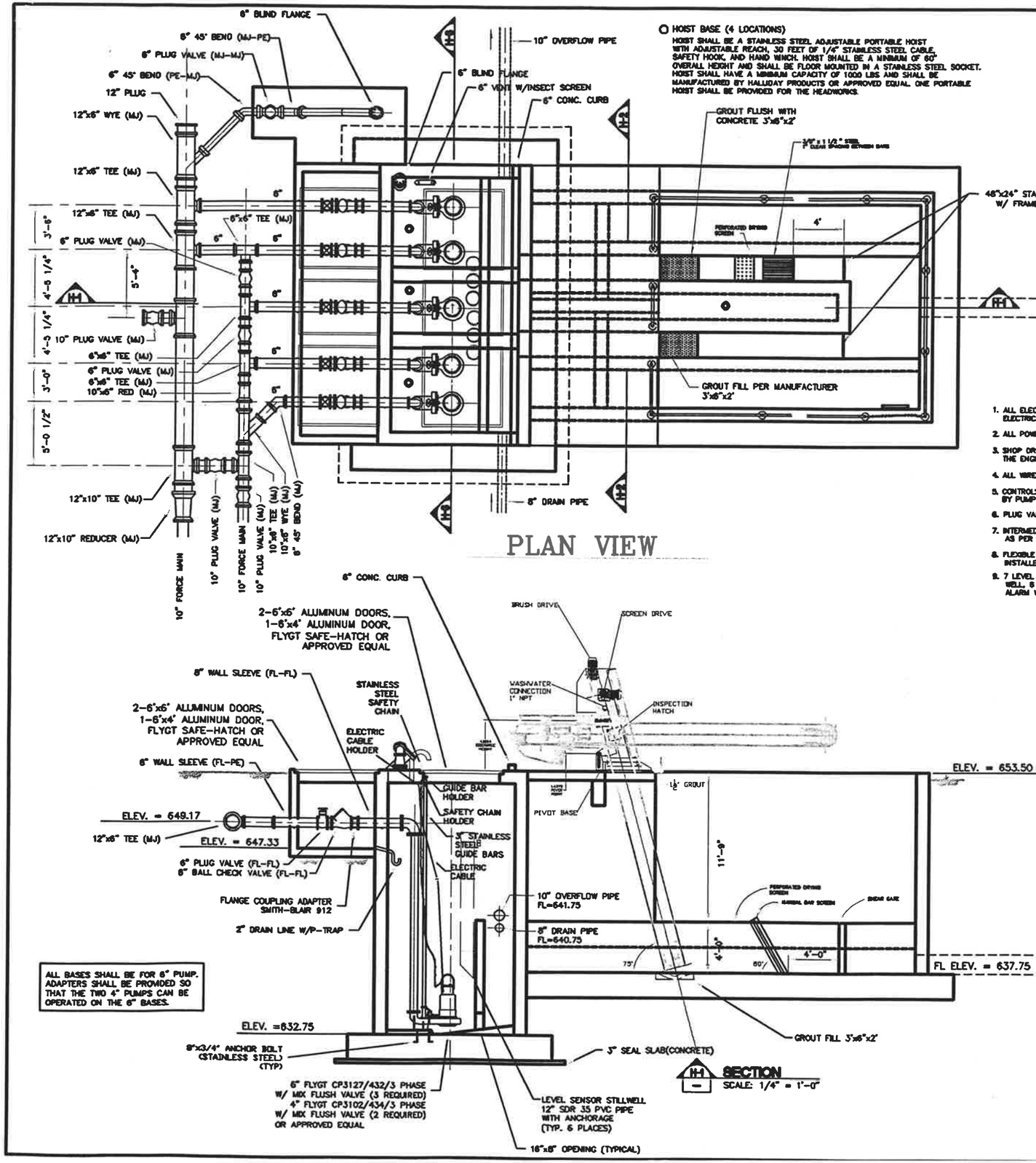

PLAN VIEW

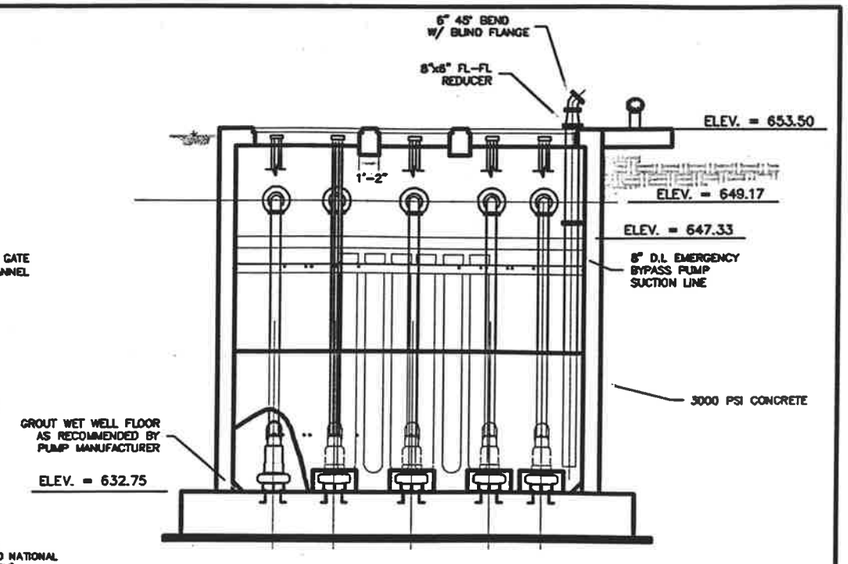

H-H SECTION
SCALE: 1/4" = 1'-0"

GENERAL NOTES

1. ALL ELECTRICAL TO CONFORM TO NATIONAL ELECTRICAL CODE (LATEST EDITION)
2. ALL POWER TO BE 3 PHASE, 480V (EXCEPT CONTROL CIRCUIT)
3. SHOP DRAWINGS (6 COPIES) TO BE APPROVED BY THE ENGINEER BEFORE INSTALLATION.
4. ALL WIRES SHALL BE COPPER
5. CONTROLS & CONTROL PANEL TO BE SUPPLIED BY PUMP MANUFACTURER & CONSTRUCTED BY CONTR.
6. PLUG VALVES SHALL CONFORM TO AWWA SPECIFICATIONS
7. INTERMEDIATE GUIDE BAR HOLDERS SHALL BE PLACED AS PER PUMP MANUFACTURER'S RECOMMENDATION.
8. FLEXIBLE WALL SLEEVES OR WALL THIMBLES SHALL BE INSTALLED AT ALL OUTER PIPE PENETRATIONS.
9. 7 LEVEL SENSORS WILL BE INSTALLED IN THE WET WELL, 6 IN STILLWELLS AS SHOWN. THE HIGH LEVEL ALARM WILL BE FREE HANGING.

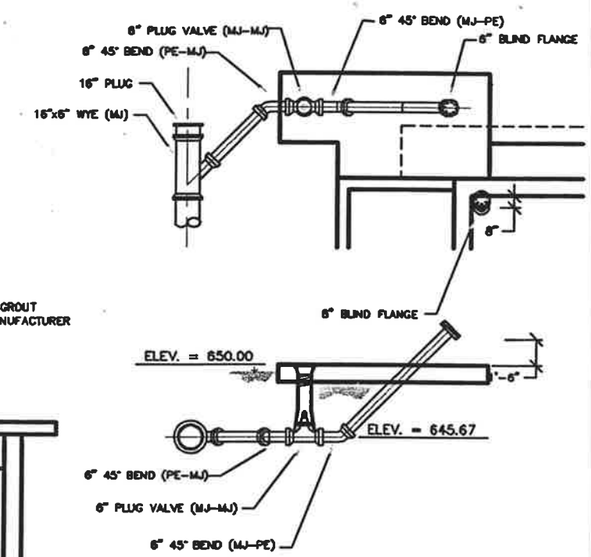

EMERGENCY BYPASS

ALL BASES SHALL BE FOR 6" PUMP. ADAPTERS SHALL BE PROVIDED SO THAT THE TWO 4" PUMPS CAN BE OPERATED ON THE 6" BASES.

H-1 SECTION
SCALE: 1/4" = 1'-0"

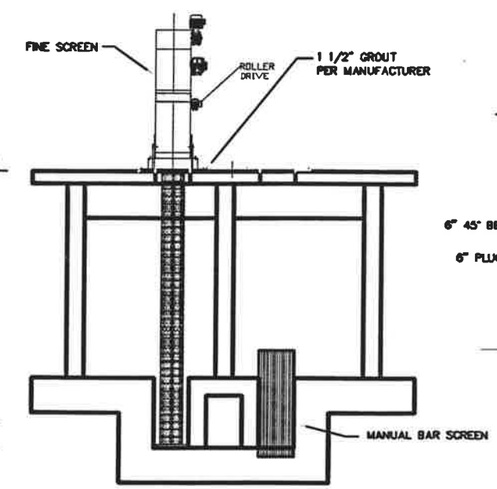

H-2 SECTION
SCALE: 1/4" = 1'-0"

NO.	DATE	REVISION

CITY OF CELINA, TEXAS
WWTP EXPANSION
HEADWORKS

HUNTER ASSOCIATES TEXAS, LTD.
ENGINEERS/PLANNERS/SURVEYORS

DESIGN BY: JMS	SCALE: 1/4"=1'-0"
DRAWN BY: JMS	CADD ID: HEADWORKS1.dwg
JOB NUMBER: 28924	DATE: 08-01 SHEET 7 OF

SS-200108-01

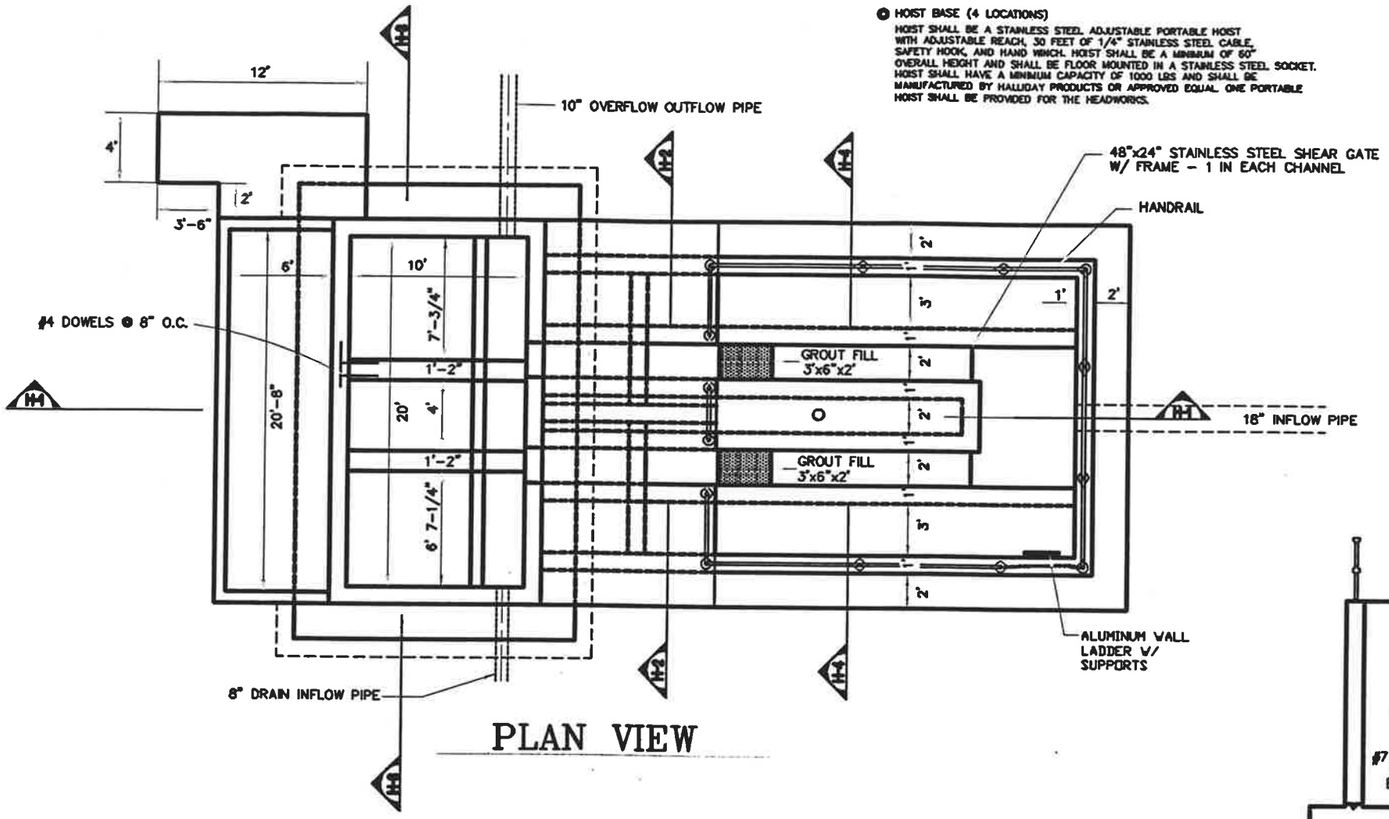

PLAN VIEW

HOIST BASE (4 LOCATIONS)

HOIST SHALL BE A STAINLESS STEEL ADJUSTABLE PORTABLE HOIST WITH ADJUSTABLE REACH, 30 FEET OF 1/4" STAINLESS STEEL CABLE, SAFETY HOOK, AND HAND WINCH. HOIST SHALL BE A MINIMUM OF 60" OVERALL HEIGHT AND SHALL BE FLOOR MOUNTED IN A STAINLESS STEEL SOCKET. HOIST SHALL HAVE A MINIMUM CAPACITY OF 1000 LBS AND SHALL BE MANUFACTURED BY HALLIDAY PRODUCTS OR APPROVED EQUAL. ONE PORTABLE HOIST SHALL BE PROVIDED FOR THE HEADWORKS.

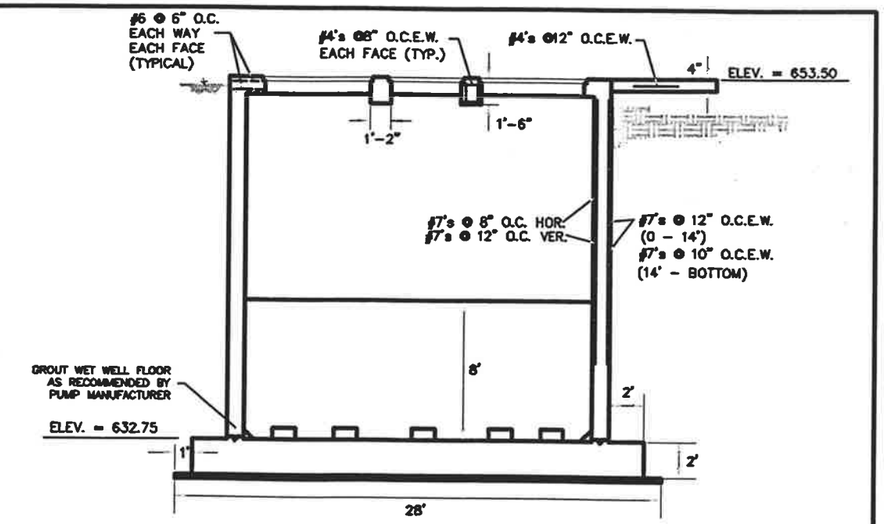

H-3 SECTION
SCALE: 1/4" = 1'-0"

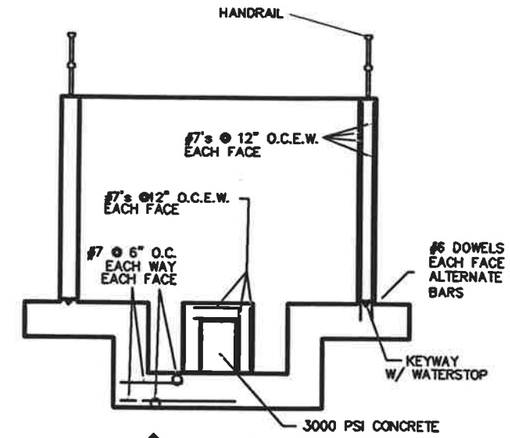

H-4 SECTION
SCALE: 1/4" = 1'-0"

H-5 SECTION
SCALE: 1/4" = 1'-0"

CONCRETE NOTES

1. All structural concrete shall have a minimum 28-day compressive strength of 4000 p.s.i. and shall contain six (6) sacks of cement per cubic yard of concrete, unless otherwise noted.
2. All reinforcing bars shall conform to ASTM A-305 and ASTM A-316, grade 60.
3. All concrete and reinforcing steel shall conform to current ACI code.
4. All wall steel shall have a minimum concrete cover of 2 1/2". All slab steel shall have a minimum concrete cover of 2 1/2" on top and 3" on bottom.
5. All bar splices, corner dowels, and joint dowels shall have a minimum lap length of 40 bar diameters or 30", whichever is greater.
6. All exposed corners shall be chamfered 3/4" x 3/4".
7. Horizontal construction joints will require keyways and waterstops. Wall forming and concrete placement plan, to allow for vertical construction, shall be prepared and submitted to the Engineer for approval.
8. All construction joints shall be two (2") inches from the face of the wall or slab to aid in wall forming.
9. No fly ash additives will be permitted in structural concrete.
10. See standard structural concrete detail sheet for details of corner reinforcement, pipe penetrations, etc.
11. Any changes in locations of construction joints shall be submitted to the Engineer for approval.

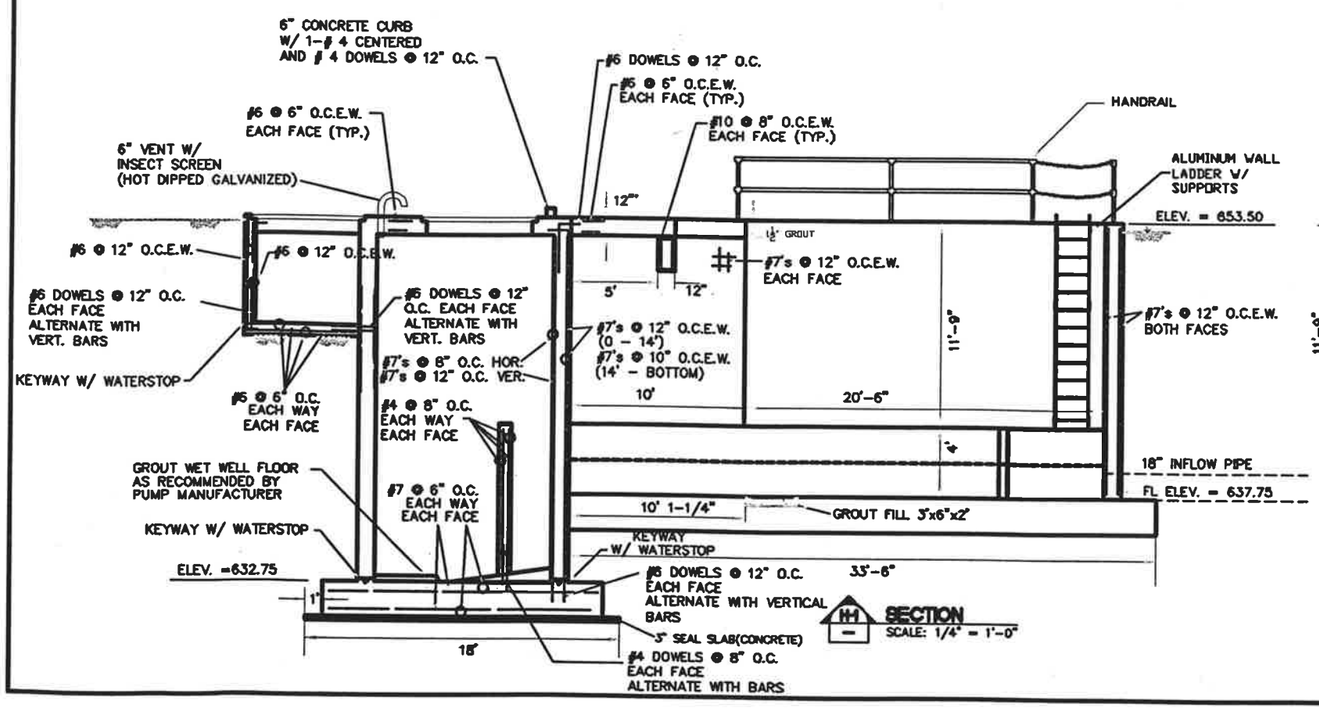

H-1 SECTION
SCALE: 1/4" = 1'-0"

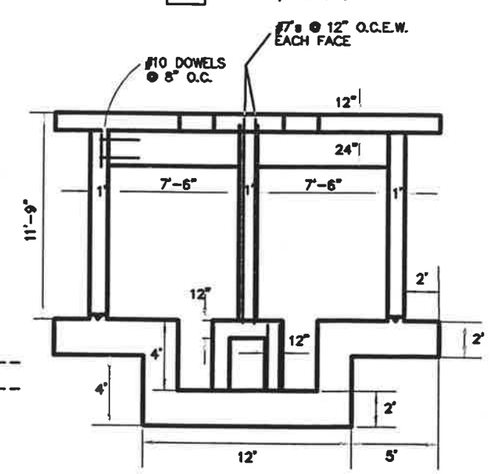

H-2 SECTION
SCALE: 1/4" = 1'-0"

NO.	DATE	REVISION

CITY OF CELINA, TEXAS
WWTP EXPANSION
HEADWORKS
STRUCTURAL

HUNTER ASSOCIATES TEXAS, LTD.
ENGINEERS/PLANNERS/SURVEYORS

DESIGN BY: JMS	SCALE: 1/4"=1'-0"
DRAWN BY: JMS	CADD ID: HDWRKSSTRUCT.dwg
JOB NUMBER: 28924	DATE: 08-01 SHEET 8 OF

SS-200108-01

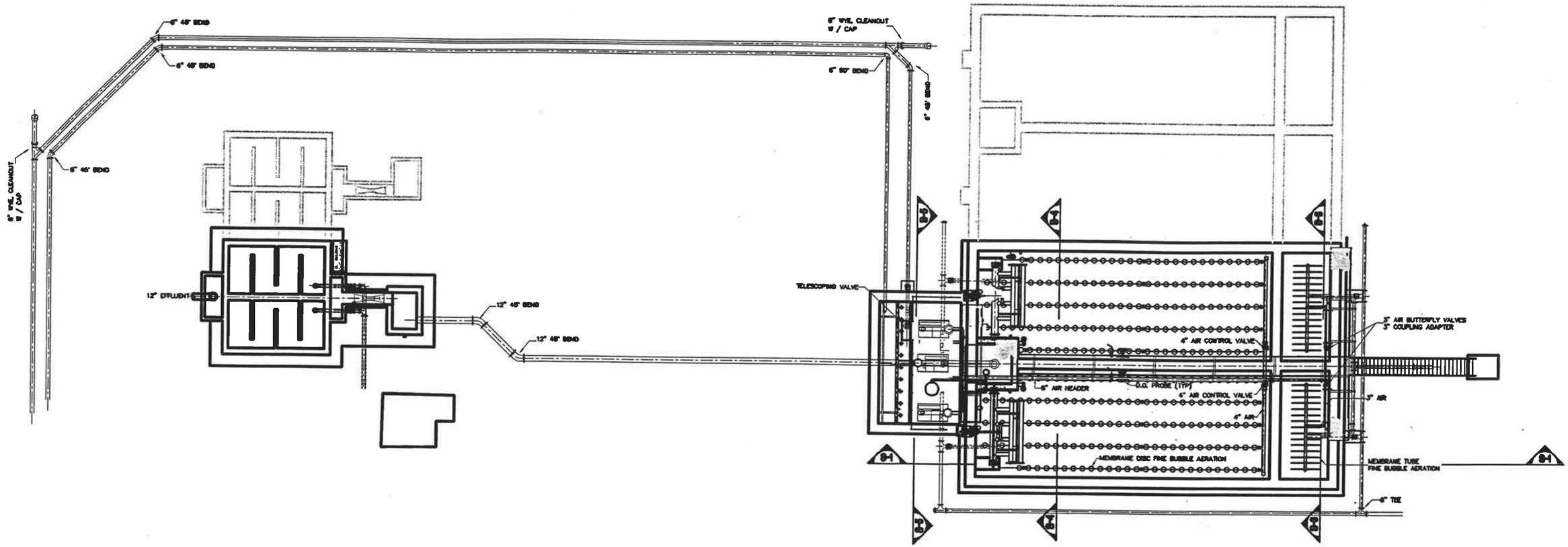

PLAN
SCALE: 1/8" = 1'-0"

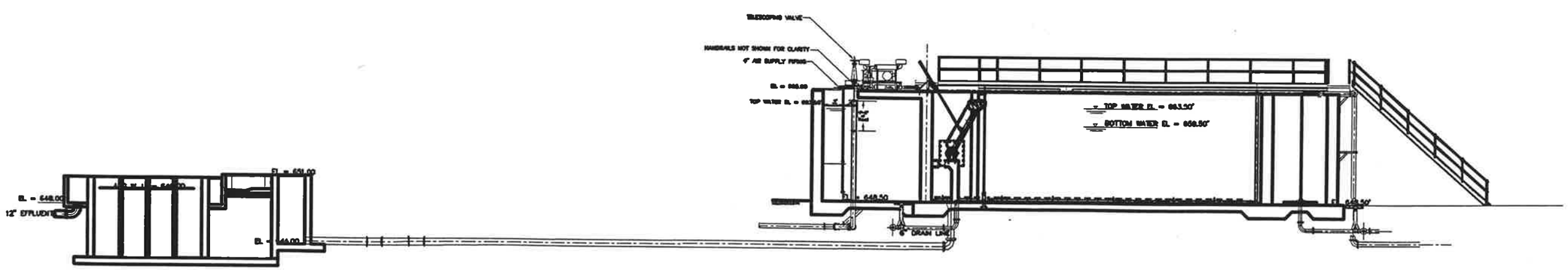

PROFILE
SCALE: 1/8" = 1'-0"

NO.	DATE	REVISION

CITY OF CELINA, TEXAS

WWTP EXPANSION

SBR PLAN AND SECTION

HUNTER ASSOCIATES TEXAS, LTD.
ENGINEERS/PLANNERS/SURVEYORS

DESIGN BY: MDH	SCALE: 1/8" = 1'
DRAWN BY: MDH	CADD ID: SBR-PLAN.DWG
JOB NUMBER: 28924	DATE: 08-01 SHEET 9 OF

SS-2001 08-01

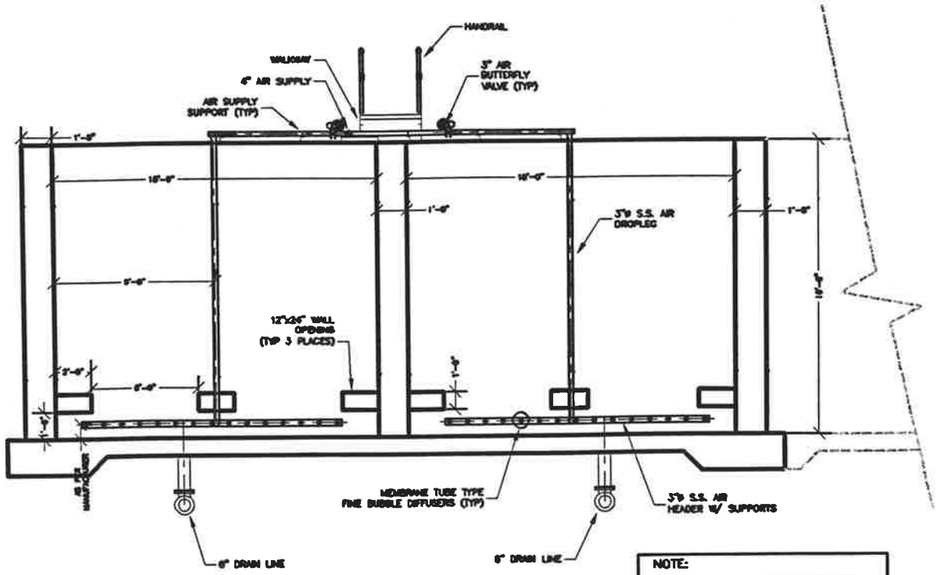

NOTE:
MEMBRANE TUBE TYPE DIFFUSER ASSEMBLY TO BE REMOVABLE.
HOIST WALL SOCKETS TO BE INSTALLED ADJACENT TO DROPLEG

SECTION 9-9
SCALE: 1/4" = 1'-0"

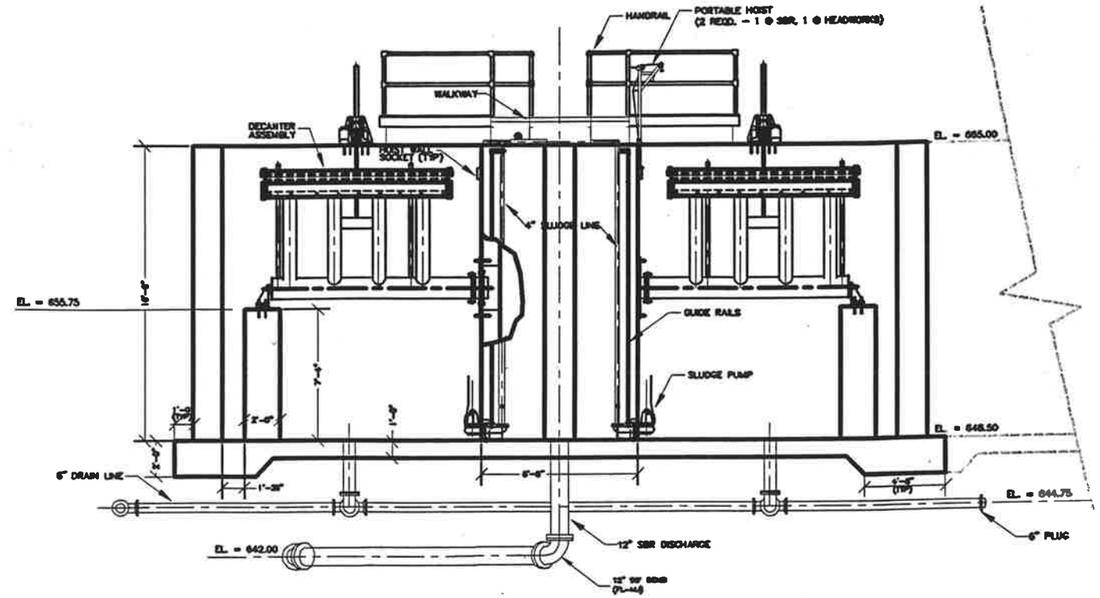

SECTION 9-4
SCALE: 1/4" = 1'-0"

HOIST SHALL BE A STAINLESS STEEL ADJUSTABLE PORTABLE HOIST WITH ADJUSTABLE REACH, 30 FEET OF 1/4" STAINLESS STEEL CABLE, SAFETY HOOK, AND HAND WINCH. HOIST SHALL BE A MINIMUM OF 60" OVERALL HEIGHT AND SHALL BE FLOOR MOUNTED IN A STAINLESS STEEL SOCKET. HOIST SHALL HAVE A MINIMUM CAPACITY OF 1000 LBS AND SHALL BE MANUFACTURED BY HALLIDAY PRODUCTS OR APPROVED EQUAL. ONE PORTABLE HOIST SHALL BE PROVIDED FOR THE SBR.

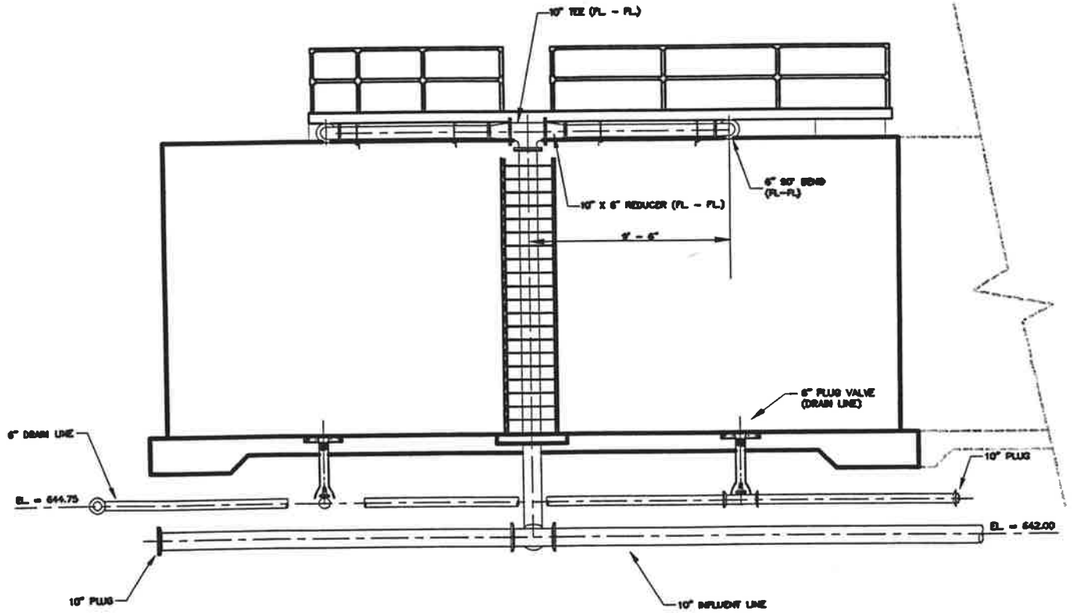

SECTION 9-2
SCALE: 1/4" = 1'-0"

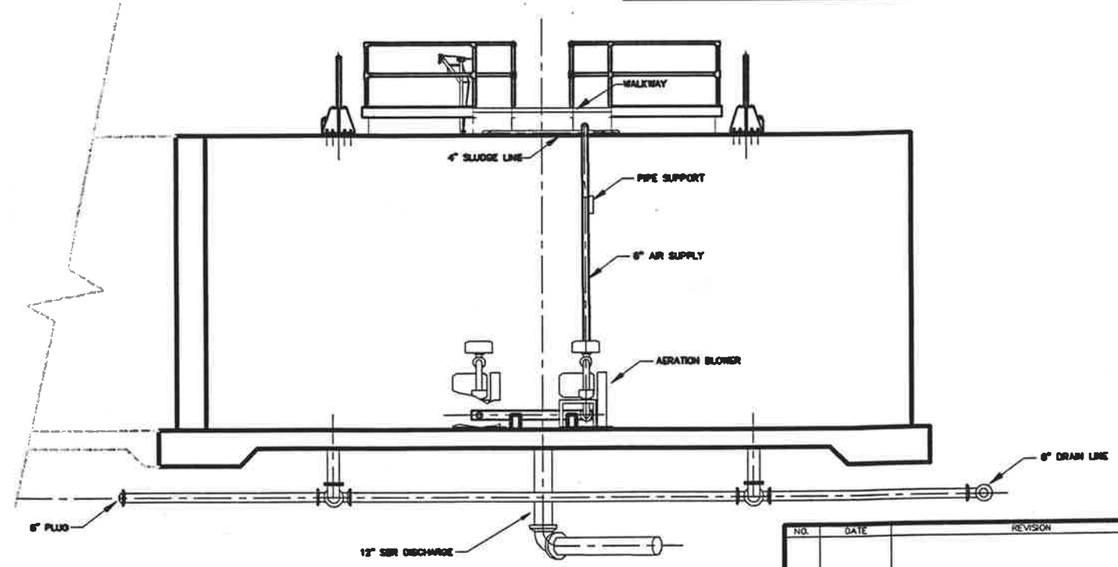

SECTION 9-6
SCALE: 1/4" = 1'-0"

NO.	DATE	REVISION

CITY OF CELINA, TEXAS
WWTP EXPANSION
SBR MECHANICAL SECTIONS & DETAILS

HUNTER ASSOCIATES TEXAS, LTD.
ENGINEERS/PLANNERS/SURVEYORS

DESIGN BY: MDH	SCALE: 1/4" = 1'-0"
DRAWN BY: MDH	CADD ID: Mech-Sect-1.dwg
JOB NUMBER: 28824	DATE: 08-01 SHEET 10 OF

SS-200108-01

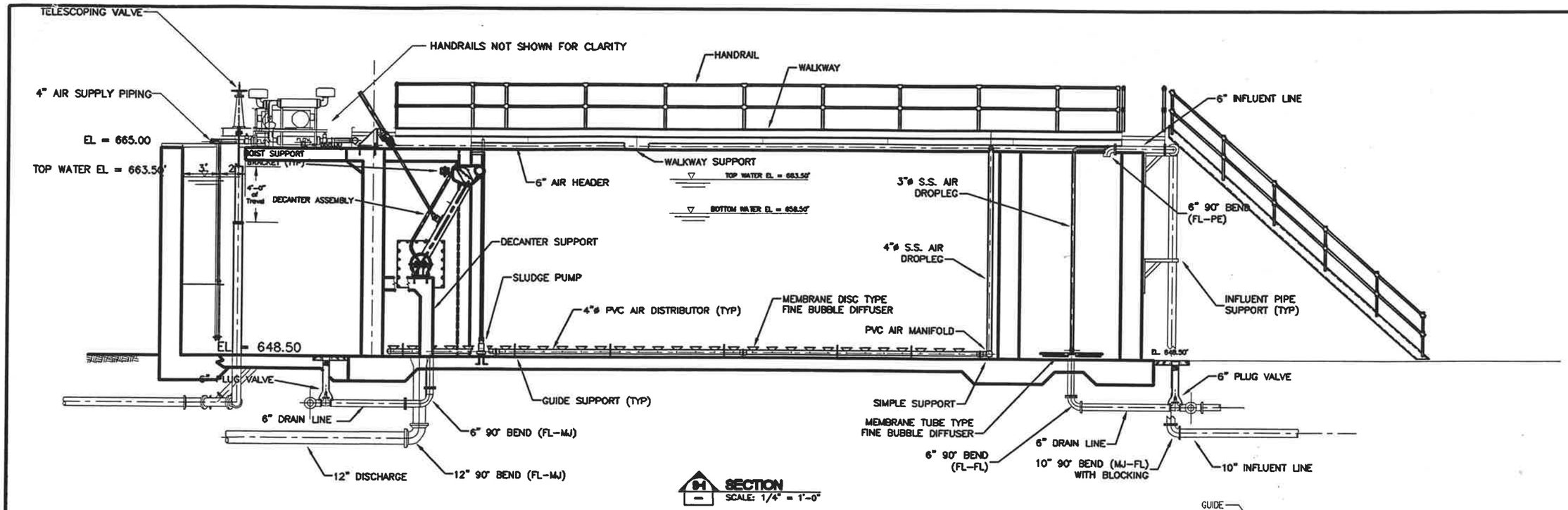

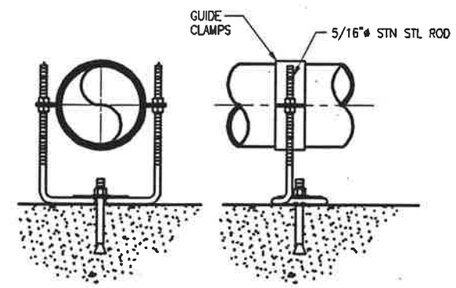

GUIDE SUPPORT

NO SCALE

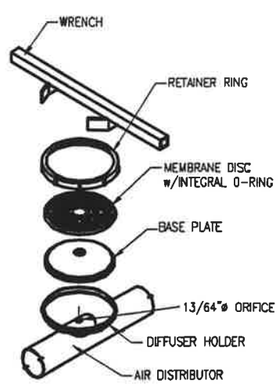

EPDM DIFFUSER ASSEMBLY

NO SCALE

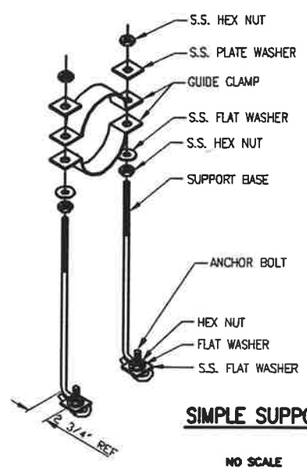

SIMPLE SUPPORT

NO SCALE

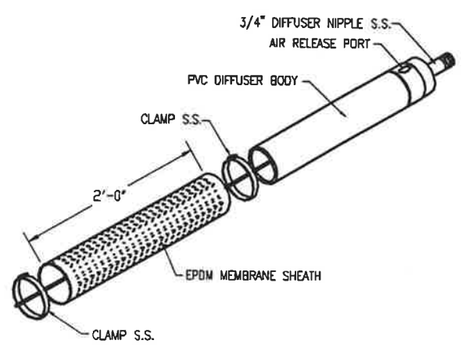

MEMBRANE TUBE DIFFUSER

NO SCALE

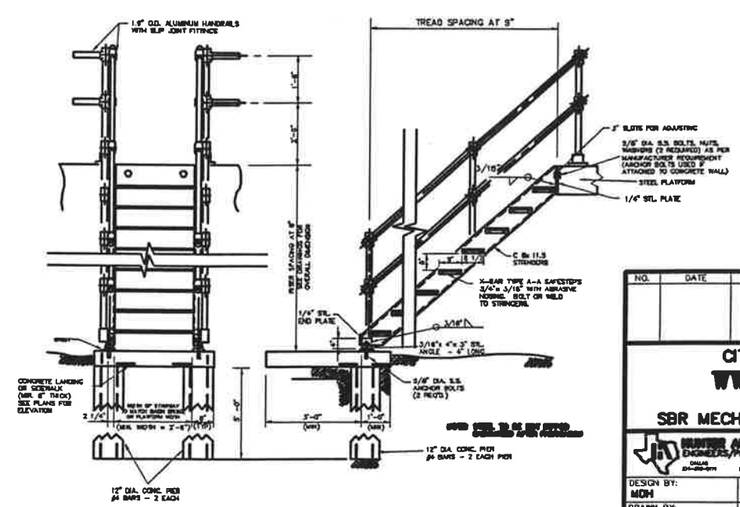

TYPICAL STEEL ACCESS STAIRWAY DETAIL

NO SCALE

NO.	DATE	REVISION

CITY OF CELINA, TEXAS

WWTP EXPANSION

SBR MECHANICAL SECTIONS & DETAILS

HUNTER ASSOCIATES TEXAS, LTD.
ENGINEERS/PLANNERS/SURVEYORS

DESIGN BY: MDH	SCALE: As Shown
DRAWN BY: MDH	CADD ID: SBR-Mech-2.dwg
JOB NUMBER: 28924	DATE: 08-01 SHEET 11 OF

SS 200108-01

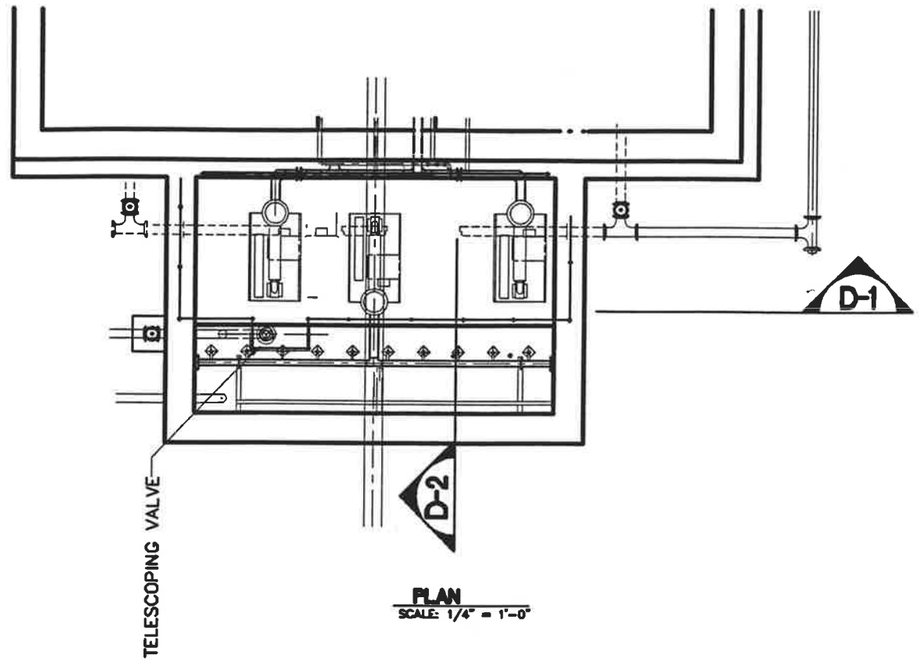

PLAN
SCALE: 1/4" = 1'-0"

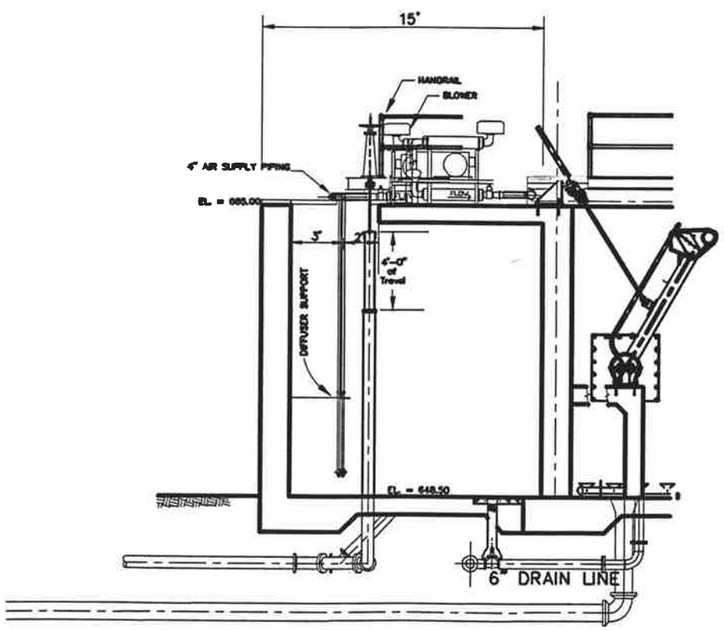

D-3 SECTION
SCALE: 1/4" = 1'-0"

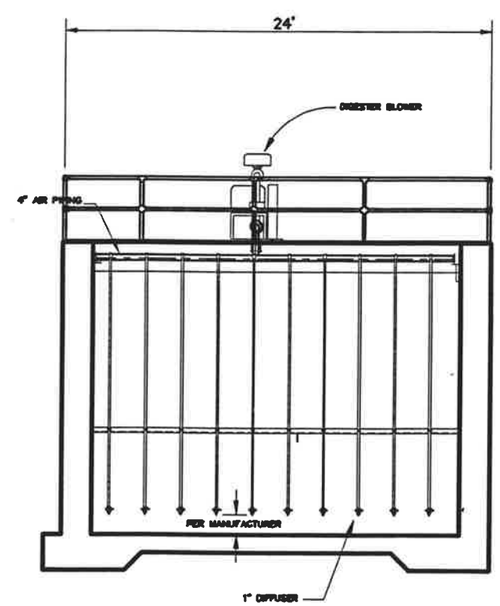

D-4 SECTION
SCALE: 1/4" = 1'-0"

NO.	DATE	REVISION
1	10/8	TELESCOPING VALVE

CITY OF CELINA, TEXAS

WWTP EXPANSION

SLUDGE HOLDING TANK DETAILS

HUNTER ASSOCIATES TEXAS, LTD.
ENGINEERS/PLANNERS/SURVEYORS

DESIGN BY: MDH	SCALE: 1/4"=1'-0"
DRAWN BY: MDH	CADD ID: Digest-Sect-1.dwg
JOB NUMBER: 26924	DATE: 08-01 SHEET 18 OF

SS 200108-01

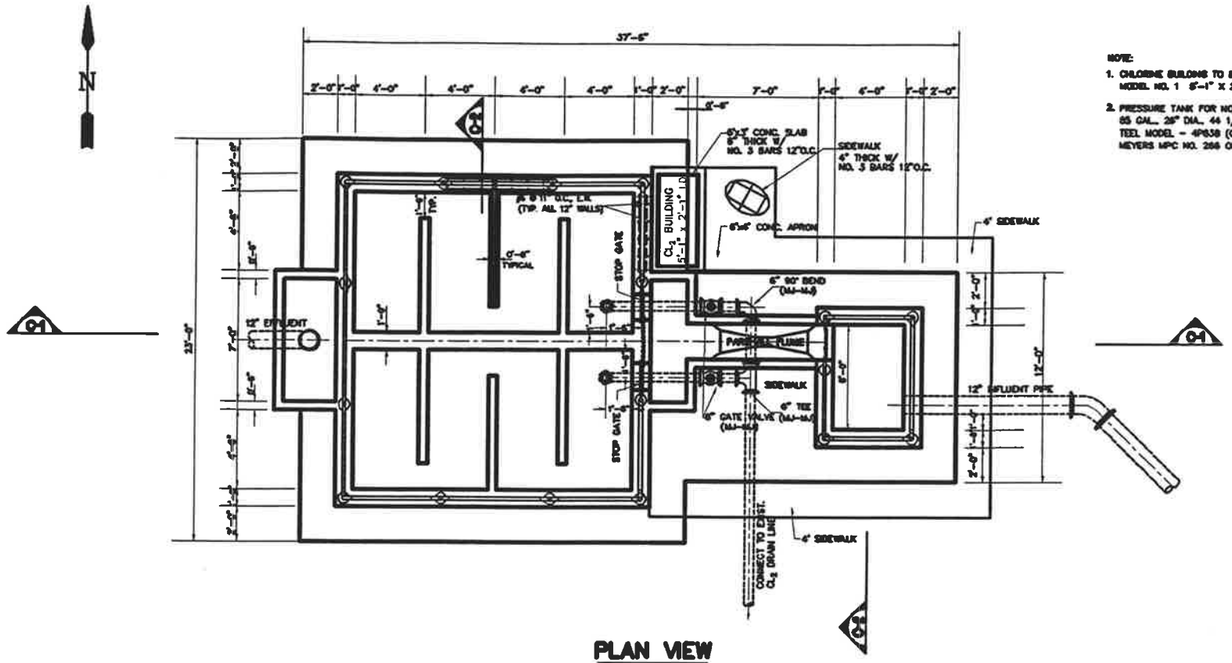

PLAN VIEW

SCALE: 1/4" = 1'-0"

NOTE:

1. CHLORINE BUILDING TO BE "PLASTI-FAB" OR EQUAL MODEL NO. 1 5'-1" X 2'-1" (INSIDE)
2. PRESSURE TANK FOR NON POTABLE WATER SYSTEM TO BE: 85 GAL., 28" DIA., 44 1/2" HEIGHT TEEL MODEL - 4P63B (GRANGER) MEYERS MPC NO. 266 OR EQUAL

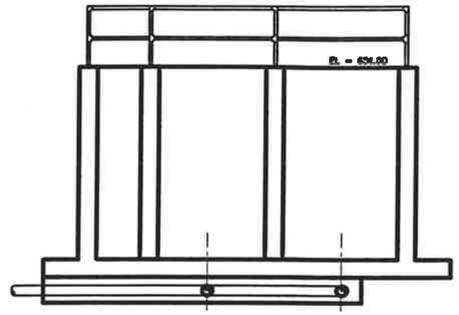

02 SECTION

SCALE: 1/4" = 1'-0"

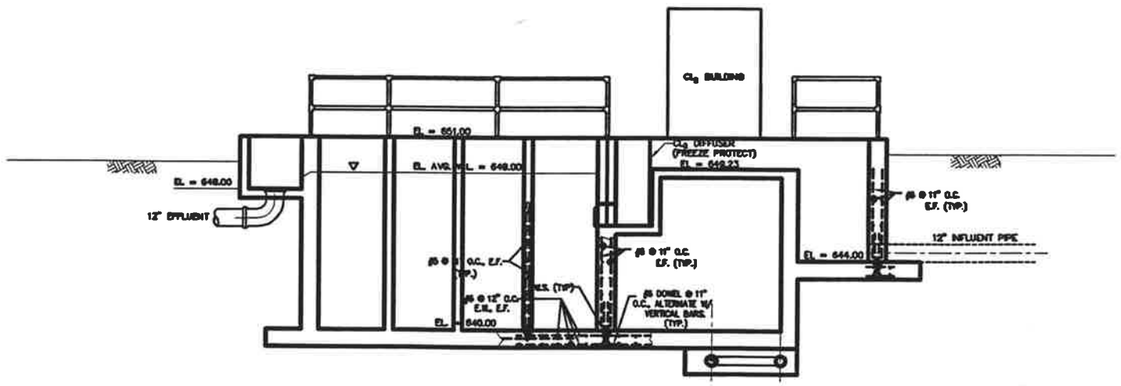

01 SECTION

SCALE: 1/4" = 1'-0"

CONCRETE NOTES

1. All structural concrete shall have a minimum 28-day compressive strength of 4000 p.s.i. and shall contain six (6) sacks of cement per cubic yard of concrete, unless otherwise noted.
2. All reinforcing bars shall conform to ASTM A-305 and ASTM A-310, grade 60.
3. All concrete and reinforcing steel shall conform to current ACI code.
4. All wall steel shall have a minimum concrete cover of 2 1/2". All slab steel shall have a minimum concrete cover of 2 1/2" on top and 3" on bottom.
5. All bar splices, corner dowels, and joint dowels shall have a minimum lap length of 40 bar diameters or 30", whichever is greater.
6. All exposed corners shall be chamfered 3/4" x 3/4".
7. Horizontal construction joints will require keyways and waterstops. Wall forming and concrete placement plan, to allow for vertical construction, shall be prepared and submitted to the Engineer for approval.
8. All construction joints shall be two (2") inches from the face of the wall or slab to aid in wall forming.
9. No fly ash additives will be permitted in structural concrete.
10. See standard structural concrete detail sheet for details of corner reinforcement, pipe penetrations, etc.
11. Any changes in locations of construction joints shall be submitted to the Engineer for approval.

NO.	DATE	REVISION

CITY OF CELINA, TEXAS

WWTP EXPANSION

CHLORINE CONTACT BASIN DETAILS

WINTER ASSOCIATES TEXAS, LTD. ENGINEERS/PLANNERS/SURVEYORS

DESIGN BY: MDH	SCALE: 1/4" = 1'
DRAWN BY: JDW	CADD ID: CL2_CONTACT.dwg
JOB NUMBER: 28024	DATE: 08-01 SHEET 19 OF

SS-200108-01