DESIGN	FED. RD. DIV. NO.	STATE PROJECT NO.		HIGHWAY NO.
SHM	6	C 91-3-21		SH 289
GRAPHICS	STATE	DISTRICT	COUNTY	SHEET NO.
WAV	TEXAS	18	COLLIN	1
CHECK	CONTROL	SECTION	JOB	
SM	0091	03	021	
CHECK				
SM				

FINAL PLANS

NAME OF CONTRACTOR: _____

DATE OF LETTING: _____

DATE WORK BEGAN: _____

DATE WORK COMPLETED: _____

DATE WORK ACCEPTED: _____

SUMMARY OF CHANGE ORDERS:

STATE OF TEXAS
DEPARTMENT OF TRANSPORTATION

PLANS OF PROPOSED
STATE HIGHWAY IMPROVEMENT

STATE PROJECT NO:
C 91-3-21

CSJ: 0091-03-021

VOLUME I

SH 289
COLLIN COUNTY

LIMITS: FROM FM 455
TO N BUS 289C, North of Celina

TOTAL LENGTH OF PROJECT =

ROADWAY	= 18,131.14 FT.	=	3.434MI.
BRIDGE	= 73.86 FT.	=	0.014MI.
TOTAL	= 18,205.00 FT.	=	3.448MI.

TYPE OF WORK: RECONSTRUCT & WIDEN TWO LANE RURAL HIGHWAY TO FOUR LANE URBAN
CONSISTING OF: GRADING, DRAINAGE, STRUCTURES, SIGNING, PAVEMENT MARKINGS, LIME TREATED SUBGRADE, FLEX BASE, CONCRETE PAVING.

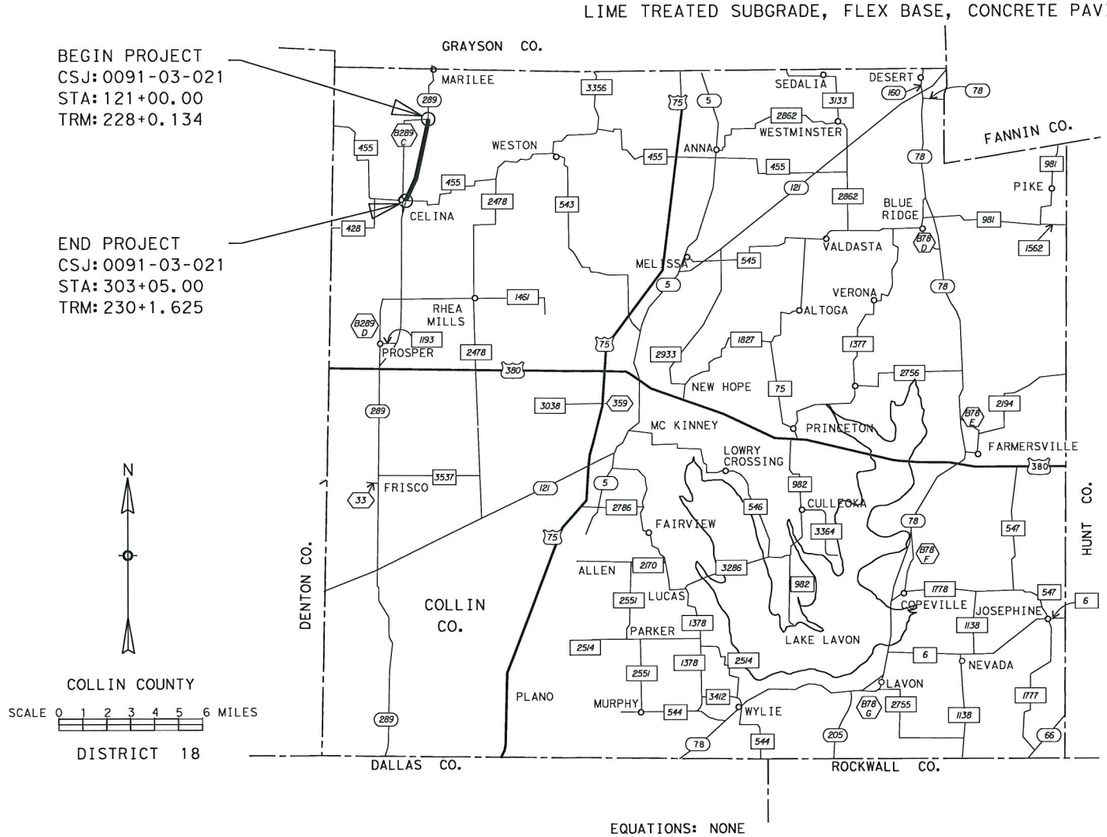

EQUATIONS: NONE
EXCEPTIONS: NONE
RAILROAD: NONE

DESIGN SPEED:
60 MPH (RURAL)
45 MPH (URBAN)
40 MPH (FM ROADS)
CR AND LOCAL STREETS - MATCH EXISTING

FUNCTIONAL CLASSIFICATION:
(RURAL AND URBAN PRINCIPAL ARTERIAL ROAD)

ADT:

ROADWAY	2010 ADT	2030 ADT	
SH 289 (RURAL) FROM STA. 121+00 TO 129+00	20,100	31,000	MEETS OR EXCEEDS 60 MPH
SH 289 (URBAN) FROM STA. 129+00 TO 303+05	20,100	31,100	MEETS OR EXCEEDS 45 MPH

NOTE:
SPECIFICATIONS ADOPTED BY THE TEXAS DEPARTMENT OF TRANSPORTATION, JUNE 1, 2004 AND SPECIFICATION ITEMS LISTED AND DATED AS FOLLOWS, SHALL GOVERN ON THIS PROJECT: SPECIAL LABOR PROVISIONS FOR STATE PROJECTS (000-007)

CITY OF CELINA
CONCURRENCE: 7/13 2011

TEXAS DEPARTMENT OF TRANSPORTATION

SUBMITTED FOR LETTING 7/13 2011
H. Mogharabi, P.E.
DESIGN ENGINEER

RECOMMENDED FOR LETTING 7/13 2011
John Hagan, P.E.
AREA ENGINEER

RECOMMENDED FOR LETTING 20__
_____, P.E.
DIRECTOR OF TRANSPORTATION PLANNING & DEVELOPMENT

APPROVED FOR LETTING 20__
_____, P.E.
DIRECTOR, TRAFFIC OPERATIONS DIVISION

RECOMMENDED FOR LETTING: 20__
_____, P.E.
DISTRICT ENGINEER

APPROVED FOR LETTING 20__
_____, P.E.
DIRECTOR, DESIGN DIVISION

WORK WAS COMPLETED ACCORDING TO THE PLANS AND CONTRACT.

Final Plans Only , P.E.
Signature of Registrant & Date

© 2011 by Texas Department of Transportation; all rights reserved

P-201107-01

INDEX OF SHEETS

VOLUME I

I. GENERAL

1	TITLE SHEET - VOLUME I
2	INDEX OF SHEETS
3-6	PROJECT LAYOUT
7-10	TYPICAL SECTIONS
11-13	GENERAL NOTES
14-17	ESTIMATE & QUANTITY
18-34	QUANTITY SUMMARY
35	SIGNING SUMMARY
36-38	SMALL SIGN SUMMARY

II. TRAFFIC CONTROL PLAN

39	TRAFFIC CONTROL PLAN NARRATIVE
40-43	ADVANCE WARNING SIGNS LAYOUT
44-47	TRAFFIC CONTROL - PHASE I TYPICAL SECTION
48-57	TRAFFIC CONTROL PLAN PHASE I
58	TRAFFIC CONTROL - PHASE II TYPICAL SECTION
59-68	TRAFFIC CONTROL PLAN PHASE II
69-72	TRAFFIC CONTROL PLAN - DETAILS INTERSECTIONS
73	TRAFFIC CONTROL PLAN - MISC DETAILS
	STANDARDS
74-85	BC (1) - 07 THRU BC (12) - 07
86	TCP (2-1) - 98
87	TCP (2-2) - 03
88	TCP (2-3) - 03
89	TCP (2-4) - 03
90	TCP (2-5) - 03
91	TCP (2-6) - 98
92	TCP (2-7) - 03
93	TCP (2-8) - 03
94	TCP (6-2) - 98A
95	TCP (6-3) - 98A
96	TCP (6-4) - 98A
97	TCP (6-5) - 98A
98	WZ (TD) - 03
99	WZ (STPM) - 03
100-101	WZ (BTS-1) - 03, AND WZ (BTS-2) - 03
102	ABSORB - 10
103	ACZ (350) - 10A

III. ROADWAY DETAILS

104	EXISTING SOIL BEARING DATA
105-114	REMOVAL ITEMS
115-132	PLAN AND PROFILE
133-146	DRIVEWAY DATA SHEET & PROFILES
147-155	CROSS STREETS DATA SHEET & PROFILES
156	INTERSECTION CONTOUR MAP
157-158	ROADWAY MISC DETAILS

III. ROADWAY DETAILS (Cont.)

	STANDARDS
159	BED - 09
160-162	CSB (1) - 10, AND CSB (7) - 10
163	M-10
164	CRCP (1) - 09
165	TA (CP) - 99
166	JS - 94
167	CCCG - 10A
168-171	PED - 05
172	CRR
173	OMITTED
174	MBGF-09
175	MBGF(MS)-10
176	SGT(7)-10

IV. RETAINING WALL DETAILS

	NONE

V. DRAINAGE DETAILS

177-182	EXTERIOR DRAINAGE AREA MAP & COMPUTATION
183-196	INTERIOR DRAINAGE AREA MAP
197-207	HYDRAULIC COMPUTATIONS
208-212	DRAINAGE PLAN & PROFILE LINE A
213-214	DRAINAGE PLAN & PROFILE LINE B
215-224	DRAINAGE PLAN & PROFILE LINE C
225-229	DRAINAGE PLAN & PROFILE LINE D
230-235	DRAINAGE PLAN & PROFILE LINE E
236-237	DRAINAGE PLAN & PROFILE LINE F
238-251	DRAINAGE PLAN & PROFILE LINE G
252-253	DRAINAGE PLAN & PROFILE LINE H
254-259	DRAINAGE PLAN & PROFILE LINE I
260-275	DRAINAGE PLAN & PROFILE LINE J
276-277	CULVERT B LAYOUT
278-280	CULVERT C LAYOUT & PHASE CONST.
281-283	CULVERT D LAYOUT & PHASE CONST.
284-286	CULVERT E LAYOUT & PHASE CONST.
287-289	CULVERT F LAYOUT & PHASE CONST.
290-292	CULVERT H LAYOUT & PHASE CONST.
293-295	CULVERT I LAYOUT & PHASE CONST.
296-299	DITCH LAYOUT
300-303	JUNCTION BOX B LAYOUT
304	DRAINAGE MISCELLANEOUS DETAILS
305	BOX CULVERT SUPPLEMET (BCS)

V. DRAINAGE DETAILS (Cont.)

	STANDARDS
306-307	CURB INLET TYPE I (MOD)
308	DROP INLET TYPE C & G (DAL)
309	MH-M
310	SCP-4
311	SCP-5
312	SCP-6
313	SCP-7
314	PW
315	CH-FW-0

VOLUME II

316	TITLE SHEET - VOLUME II
317	INDEX OF SHEETS

VI. BRIDGES

318-325	BRIDGE CLASS CULVERT "A" LAYOUT & HYDRAULIC DATA
326-333	BRIDGE CLASS CULVERT "G" LAYOUT & HYDRAULIC DATA
	STANDARDS
334	SCP-8
335	SCP-10
336	SCP-MD

VII. TRAFFIC ITEMS

337-346	SIGNING & DELINEATION LAYOUTS
347-356	PAVEMENT MARKING
357	GUIDE SIGN DETAILS
358-359	ROADSIDE FLASHER PLAN
	STANDARDS
360	PM (1) - 03
361	PM (2) - 10
362	PM (4) - 10
363	PM (5) - 01
364	PM (6) - 01
365	PM (7) - 10
366	FPM (1) - 10
367	FPM (2) - 10
368	FPM (3) - 10
369	FPM (4) - 10
370	D & OM (1) - 10

VII. TRAFFIC ITEMS (Cont.)

371	D & OM (2) - 04
372	D & OM (3) - 04
373	D & OM (4) - 04
374	D & OM (5) - 04
375	D & OM (VIA) - 04
376-378	TSR(3) - 08, TSR (4) - 08, AND TSR (5) - 08
379	SMD (GEN) - 08
380	SMD (SLIP-1) - 08
381	SMD (SLIP-2) - 08
382	SMD (SLIP-3) - 08
383	ED (1) - 03
384	SPRFBA (3) - 04
385	TS-FD - 99

XIII. UTILITIES

386-402	SUE PLANS

IX. ENVIRONMENTAL ISSUES

403	ENVIRONMENTAL PERMITS, ISSUES AND COMMITMENTS (EPIC)
404	STORMWATER POLLUTION PREVENTION PLAN (SW3P)
405-424	SW3P LAYOUTS
	STANDARDS
425-427	EC (1) - 09, EC (2) - 93, AND EC (3) - 93
428-429	EROSION CONTROL LOGS (DAL)
430	VEGETATION ESTABLISHMENT (DAL)
431	VERTICAL TRACKING FOR EROSION CONTROL (DAL)
432	SW3P PROJECT LIMITS SIGN (DAL)
433	CURB INLET SEDIMENT PROTECTION

STATE OF TEXAS
HASSAN SAM MOGHADASSI
84231
LICENSED
PROFESSIONAL ENGINEER

H. Moghadassi, P.E. 7/12/11
Signature of Registrant & Date

Texas Department of Transportation
© 2011

SH 289
FM 455 TO N BUS 289C
INDEX OF SHEETS

SHEET 1 OF 1

DESIGN	FED.RD. DIV.NO.	STATE PROJECT NO.		HIGHWAY NO.
SHM	6	SEE TITLE SHEET		SH 289
GRAPHICS	STATE	DISTRICT	COUNTY	SHEET NO.
OE	TEXAS	18	COLLIN	2
CHECK SHM	CONTROL	SECTION	JOB	
CHECK SHM	0091	03	P-201107-01	

TXDOT
200.0000 ft / IN.

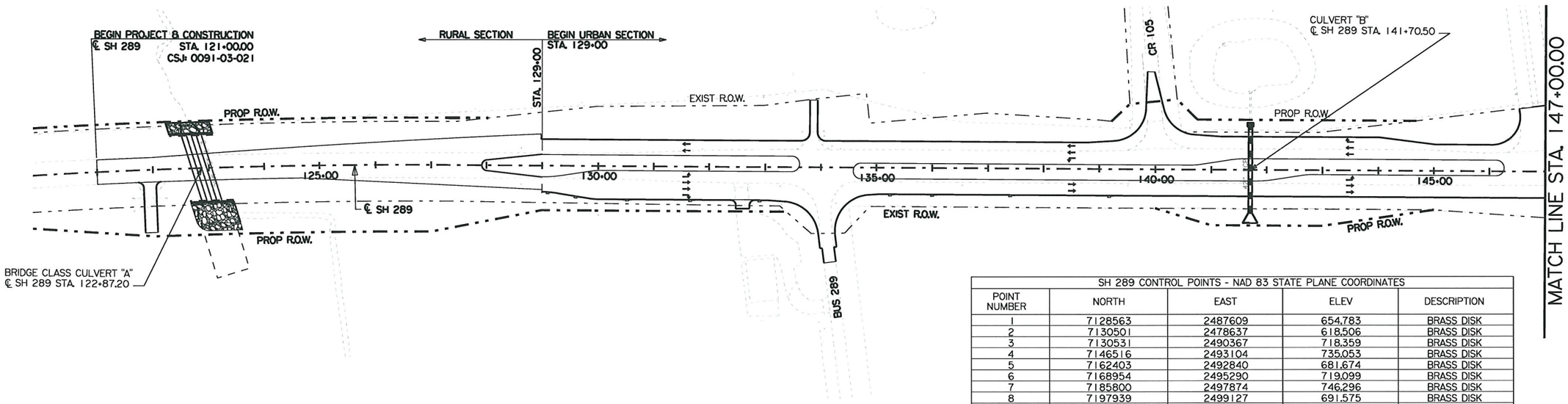

0 100 200
SCALE IN FEET

SH 289 CONTROL POINTS - NAD 83 STATE PLANE COORDINATES				
POINT NUMBER	NORTH	EAST	ELEV	DESCRIPTION
1	7128563	2487609	654.783	BRASS DISK
2	7130501	2478637	618.506	BRASS DISK
3	7130531	2490367	718.359	BRASS DISK
4	7146516	2493104	735.053	BRASS DISK
5	7162403	2492840	681.674	BRASS DISK
6	7168954	2495290	719.099	BRASS DISK
7	7185800	2497874	746.296	BRASS DISK
8	7197939	2499127	691.575	BRASS DISK
9	7146619	2501980	712.950	BRASS DISK
10	7146619	2501979	715.433	BRASS DISK

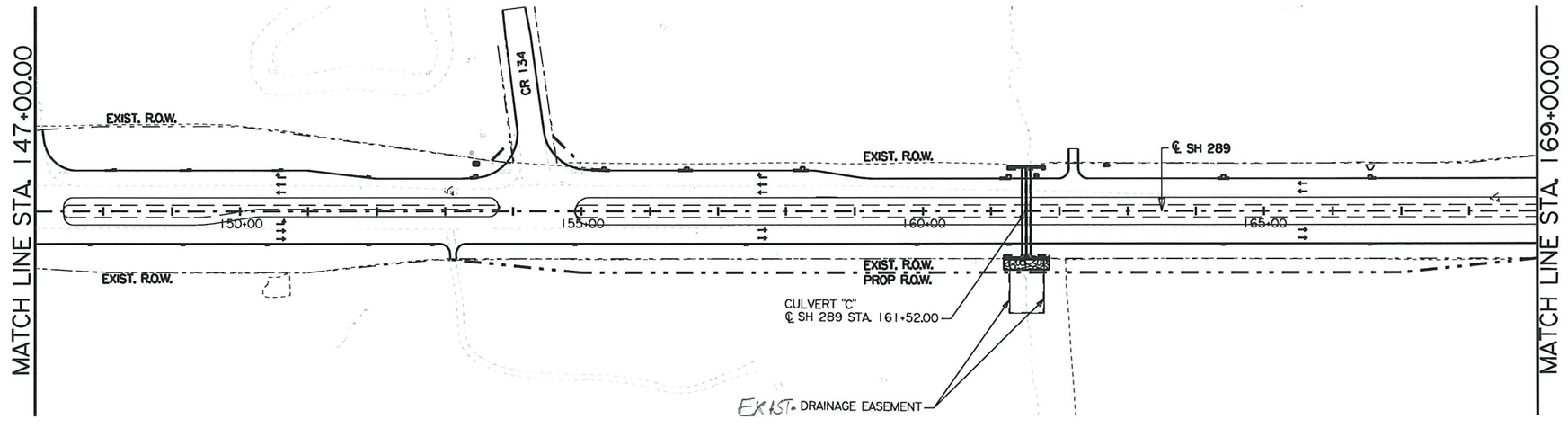

STATE OF TEXAS
HASSAN SAM MOGHADASSI
84231
LICENSED
PROFESSIONAL ENGINEER

H. Moghadassi , P.E. 7/12/11
Signature of Registrant & Date

SH289*PL1.dgn

Texas Department of Transportation
© 2011

SH 289
FM 455 TO N BUS 289C
PROJECT LAYOUT
BEGIN CONSTRUCTION TO STA. 169+00.00

SCALE: 1" = 200' SHEET 1 of 4

DESIGN	FED. RD. DIV. NO.	PROJECT NO.		HIGHWAY NO.
SHM	6	SEE TITLE SHEET		SH 289
GRAPHICS	STATE	DISTRICT	COUNTY	SHEET NO.
WAV	TEXAS	DALLAS	COLLIN	
CHECK	CONTROL	SECTION	JOB	3
SM	0091	03	621	
CHECK				

P-201107-01

7/11/2011
T:\DALDGN*S\SH289\Design\sheets\PRJLAYOUT\SH289*PL1.dgn
...\sheets\PRJLAYOUT\SH289*PL1.dgn

TXDOT
200.0000 ft / IN.

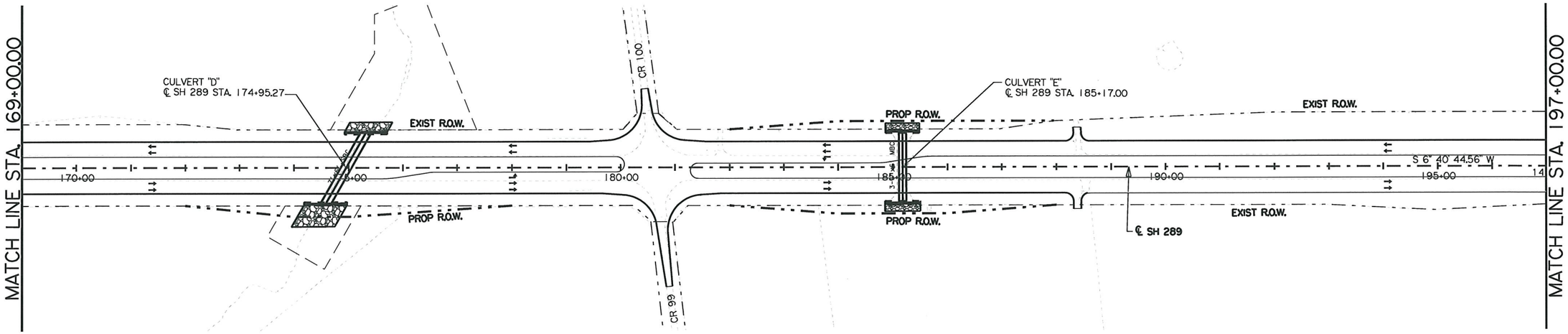

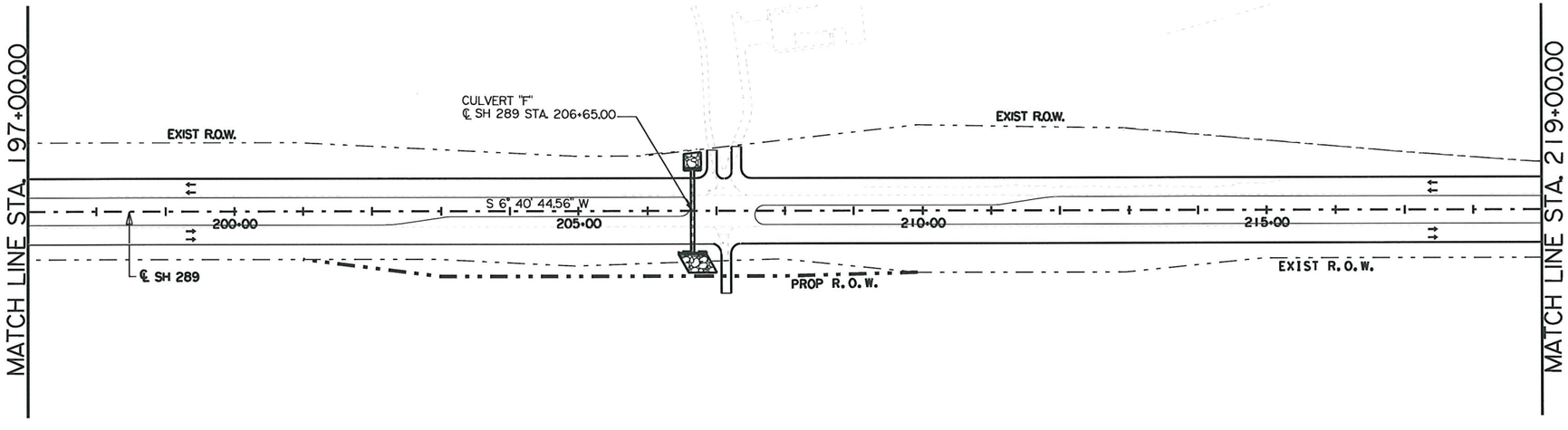

0 100 200
SCALE IN FEET

STATE OF TEXAS
HASSAN SAM MOGHADASSI
84231
LICENSED
PROFESSIONAL ENGINEER

H. Moghadassi, P.E. 7/12/11
Signature of Registrant & Date

SH289*PL2.dgn

Texas Department of Transportation
© 2011

SH 289
FM 455 TO N BUS 289C
PROJECT LAYOUT
STA. 169+00.00 TO STA. 219+00.00

SCALE: 1"= 200' SHEET 2 of 4

DESIGN	FED. RD. DIV. NO.	PROJECT NO.		HIGHWAY NO.
SHM	6	SEE TITLE SHEET		SH 289
GRAPHICS WAV	STATE	DISTRICT	COUNTY	SHEET NO.
CHECK SM	TEXAS	DALLAS	COLLIN	4
CHECK	CONTROL	SECTION	JOB	
	0091	03	201107-01	

P-201107-01

7/11/2011
+:\dal\dgn*s\sh289\design\sheets\prjlayout\SH289*PL2.dgn
...\sheets\prjlayout\SH289*PL2.dgn

TXDOT
200.0000 ft / IN.

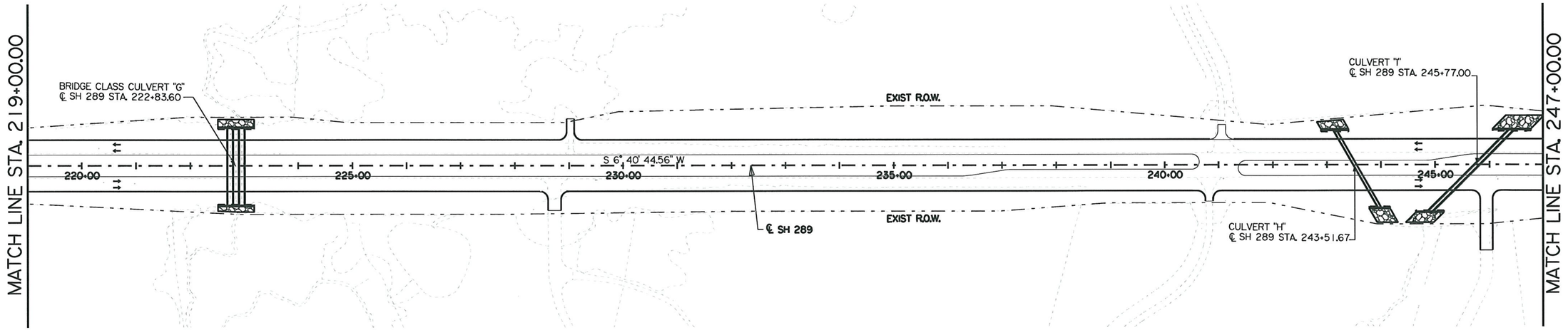

0 100 200
SCALE IN FEET

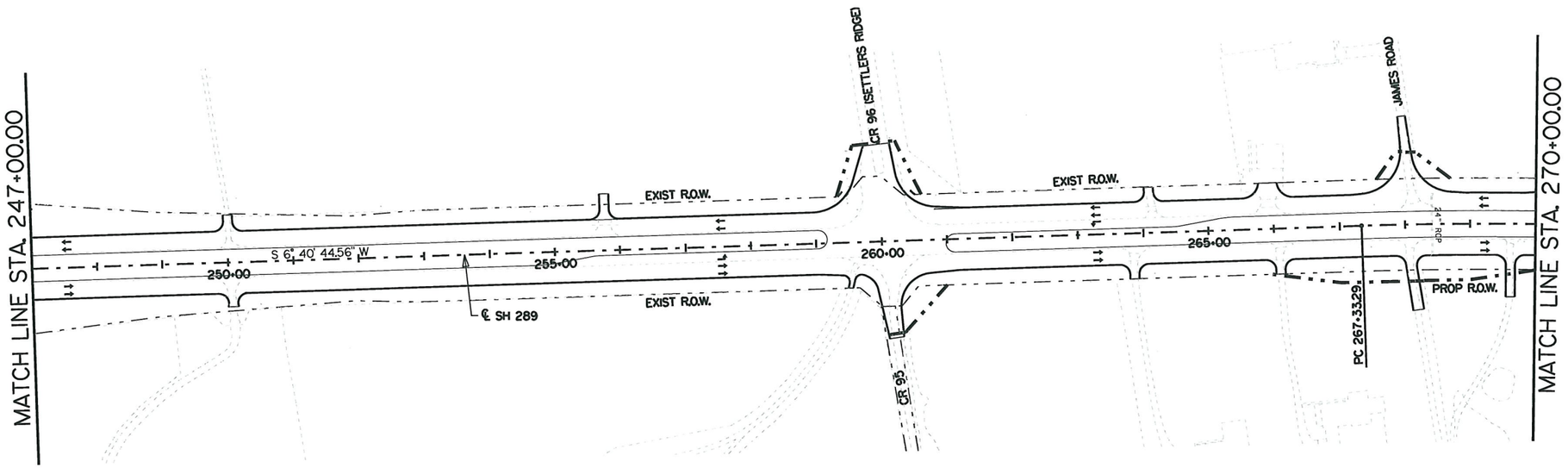

STATE OF TEXAS
HASSAN SAM MOGHADASSI
84231
LICENSED
PROFESSIONAL ENGINEER

H. Moghadassi, P.E. 7/12/11
Signature of Registrant & Date

SH289*PL3.dgn

Texas Department of Transportation
© 2011

SH 289
FM 455 TO N BUS 289C
PROJECT LAYOUT
STA. 219+00.00 TO STA. 270+00.00

SCALE: 1"= 200' SHEET 3 of 4

DESIGN	FED. RD. DIV. NO.	PROJECT NO.		HIGHWAY NO.
SHM	6	SEE TITLE SHEET		SH 289
GRAPHICS WAV	STATE	DISTRICT	COUNTY	SHEET NO.
CHECK SM	TEXAS	DALLAS	COLLIN	5
CHECK	CONTROL	SECTION	JOB	
	0091	03	201	

P-201107-01

7/11/2011
t:\dal\dgn*s\sh289\design\sheets\prjlayout\SH289*PL3.dgn
...\sheets\prjlayout\SH289*PL3.dgn

$USER$
$SCALE$

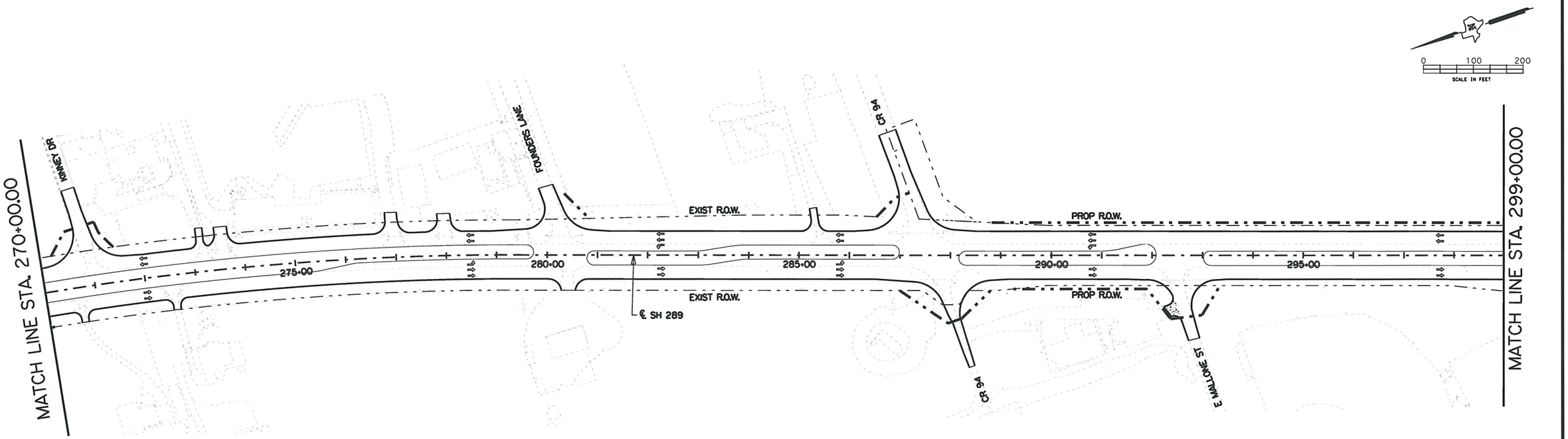

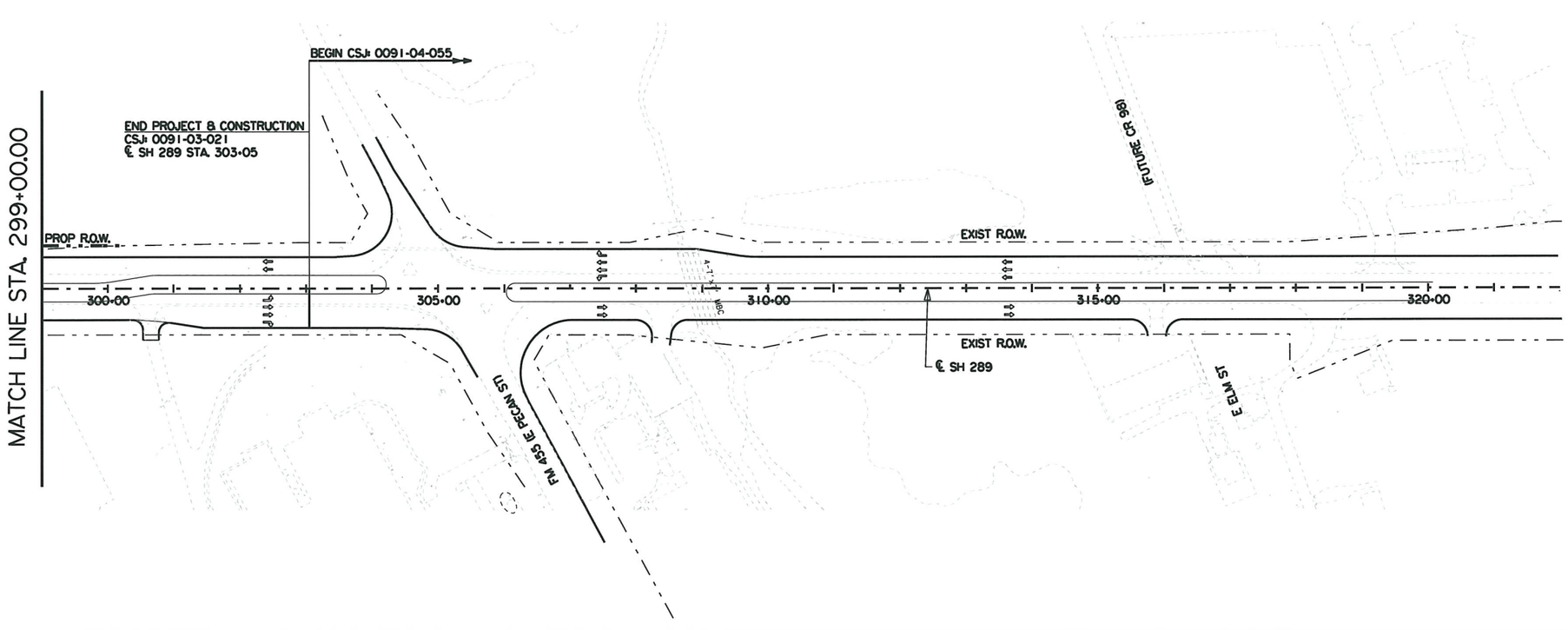

STATE OF TEXAS
HASSAN SAM MOGHADASSI
84231
LICENSED
PROFESSIONAL ENGINEER

H. Moghadassi , P.E. 12/29/11
Signature of Registrant & Date

$FILES$

Texas Department of Transportation
© 2011

SH 289
FM 455 TO N BUS 289C
PROJECT LAYOUT
STA. 270+00.00 TO END CONSTRUCTION

SCALE: 1"= 200' SHEET 4 of 4

DESIGN	FED. RD. DIV. NO.	PROJECT NO.		HIGHWAY NO.
SHM	6	SEE TITLE SHEET		SH 289
GRAPHICS	STATE	DISTRICT	COUNTY	SHEET NO.
WAV	TEXAS	DALLAS	COLLIN	6
CHECK SM	CONTROL	SECTION	JOB	
CHECK	0091	03	62	

P-201107-01

$FILEABBREV$

12/29/2011
T:\DALDGN*S\SH289\Design\sheets\PRJLAYOUT\SH289*PL4.dgn

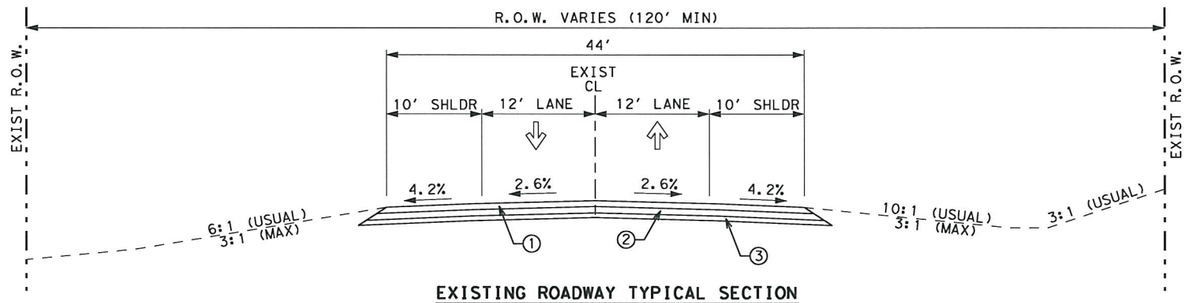

EXISTING ROADWAY TYPICAL SECTION
BEGIN PROJECT TO STA 297+20

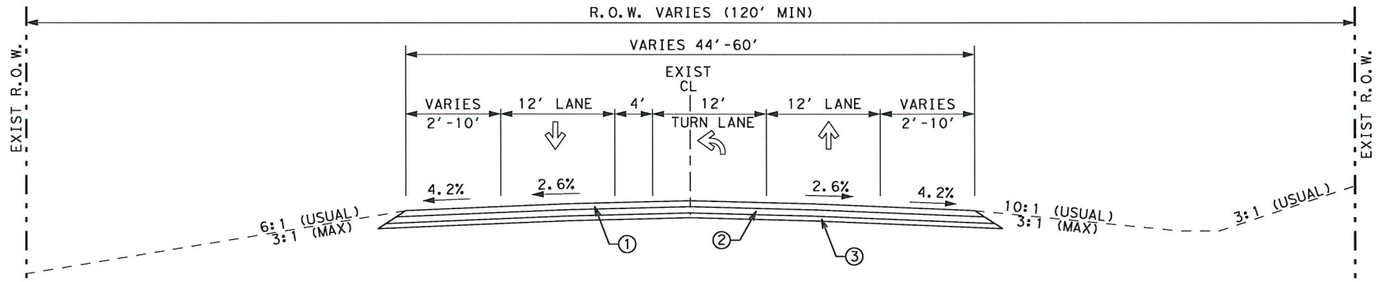

EXISTING ROADWAY TYPICAL SECTION
STA 297+20 TO STA 303+05

LEGEND

(1) APPROX. 7-12" ~ 160# ACP/SY TWO COURSE SURFACE TREATMENT (HMAC) (PER ASBUILT)
(2) APPROX 8" ~ FOUNDATION COURSE STABILIZED W/2 1/2% LIME (PER ASBUILT)
(3) APPROX 6" ~ LIME TREATED SUBGRADE (4%) (PER ASBUILT)

STATE OF TEXAS
HASSAN SAM MOGHADASSI
84231
LICENSED
PROFESSIONAL ENGINEER

H. Moghadassi, P.E. 7/12/11
Signature of Registrant & Date

Texas Department of Transportation
© 2011

SH 289
FM 455 TO N BUS 289C

TYPICAL SECTIONS EXISTING

SCALE: NOT TO SCALE Sheet 1 of 4

DESIGN	FED.RD. DIV.NO.	PROJECT NO.		HIGHWAY NO.
SM	6	SEE TITLE SHEET		SH 289
GRAPHICS SM	STATE	DISTRICT	COUNTY	SHEET NO.
CHECK SHM	TEXAS	DALLAS	COLLIN	7
CHECK	CONTROL	SECTION	JOB	
	0091	03	201	

P-201107-01

TXDOT
16.0000 ft / IN.

LEGEND

1. TWO COURSE SURFACE TREATMENT (PER ASBUILT)
2. 8" FOUNDATION COURSE STABILIZED W/2 1/2% LIME (PER ASBUILT)
3. 6" LIME TREATED SUBGRADE (LTS) W/4% LIME (PER ASBUILT)

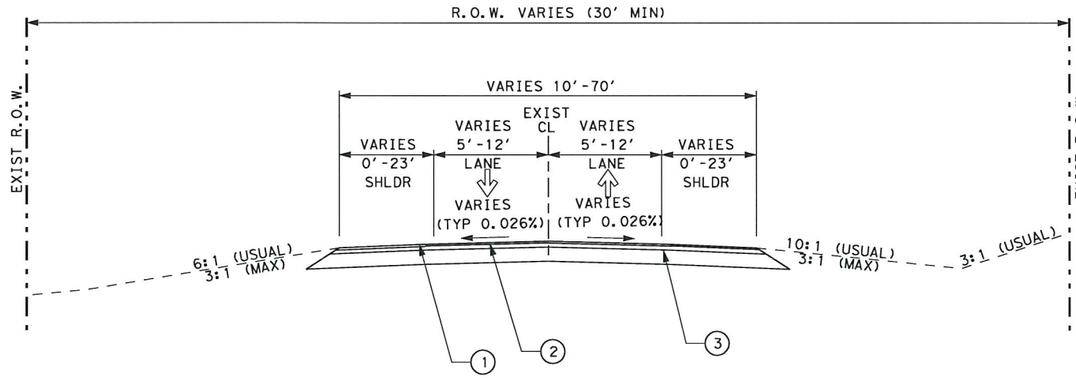

EXISTING CROSS STREET TYPICAL SECTION (ASPHALT PAVING)

BUS 289
CR 134
CR 94

FOUNDERS LANE
MALLONE

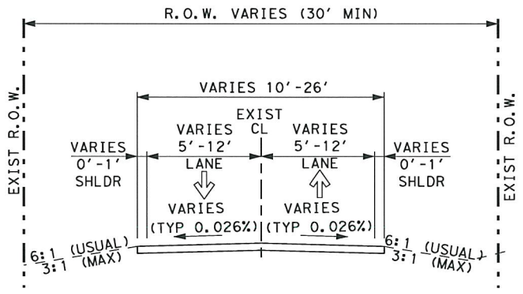

EXISTING CROSS STREET TYPICAL SECTION (UNPAVED)

CR 105
CR 100
KINNEY

CR 99
CR 95
JAMES

PAVEMENT INFO NOT DOCUMENTED IN THE ASBUILT CSJ: 91-3-13

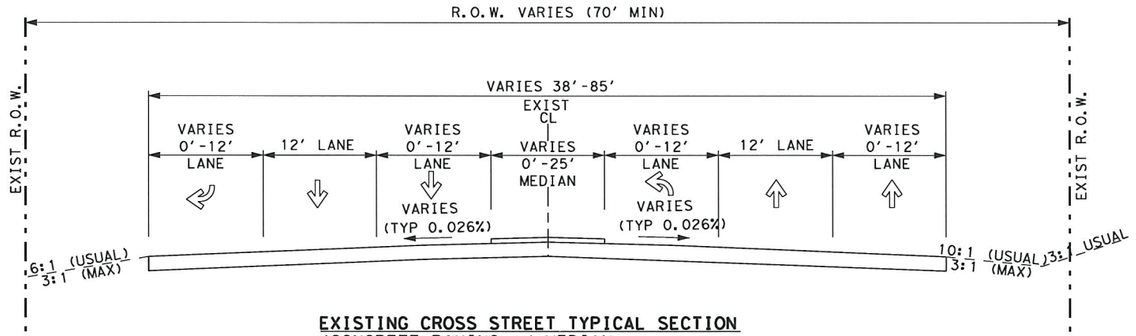

EXISTING CROSS STREET TYPICAL SECTION
(CONCRETE PAVING w/ MEDIAN

CR 96

PAVEMENT INFO NOT DOCUMENTED IN THE ASBUILT CSJ: 91-3-13

STATE OF TEXAS
HASSAN SAM MOGHADASSI
84231
LICENSED
PROFESSIONAL ENGINEER

H. Moghadassi, P.E. 7/12/11
Signature of Registrant & Date

Typ Xsection.dgn

Texas Department of Transportation
© 2011

SH 289
FM 455 TO N BUS 289C
TYPICAL SECTIONS
EXISTING - CROSS STREETS

SCALE: NOT TO SCALE Sheet 2 of 4

DESIGN	FED. RD. DIV. NO.	PROJECT NO.		HIGHWAY NO.
	6	SEE TITLE SHEET		SH 289
GRAPHICS OE	STATE	DISTRICT	COUNTY	SHEET NO.
CHECK SHM	TEXAS	DALLAS	COLLIN	8
CHECK	CONTROL	SECTION	JOB	
	0091	03	62	

P-201107-01

7/11/2011
I:\dalgn*s\sh289\design\sheets\typsec\Typ Xsection.dgn
...\sheets\typsec\Typ Xsection.dgn

TXDOT
16.0000 ft / IN.

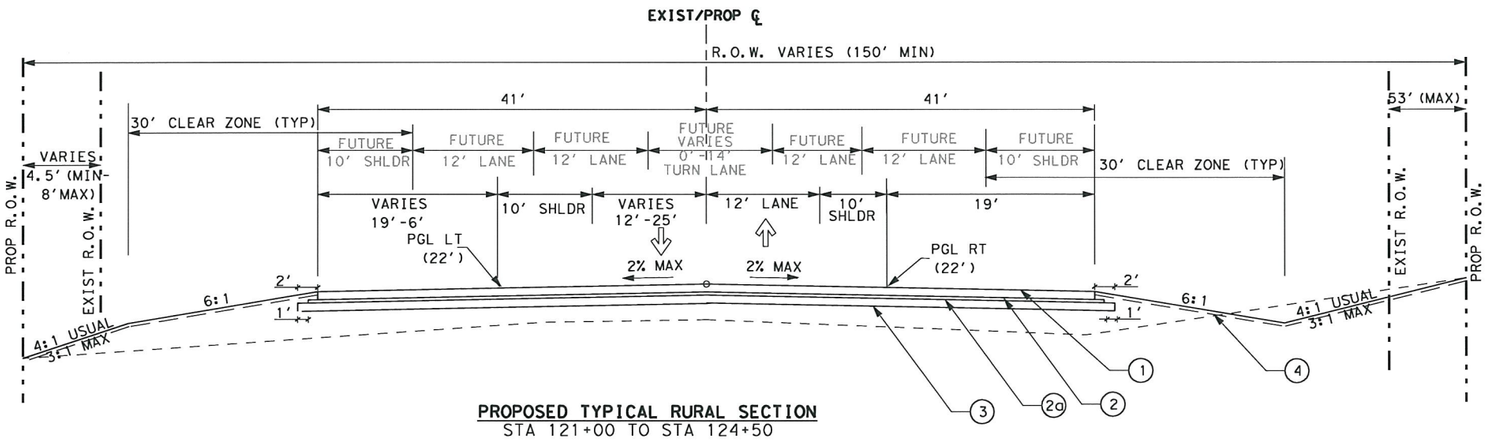

PROPOSED TYPICAL RURAL SECTION
STA 121+00 TO STA 124+50

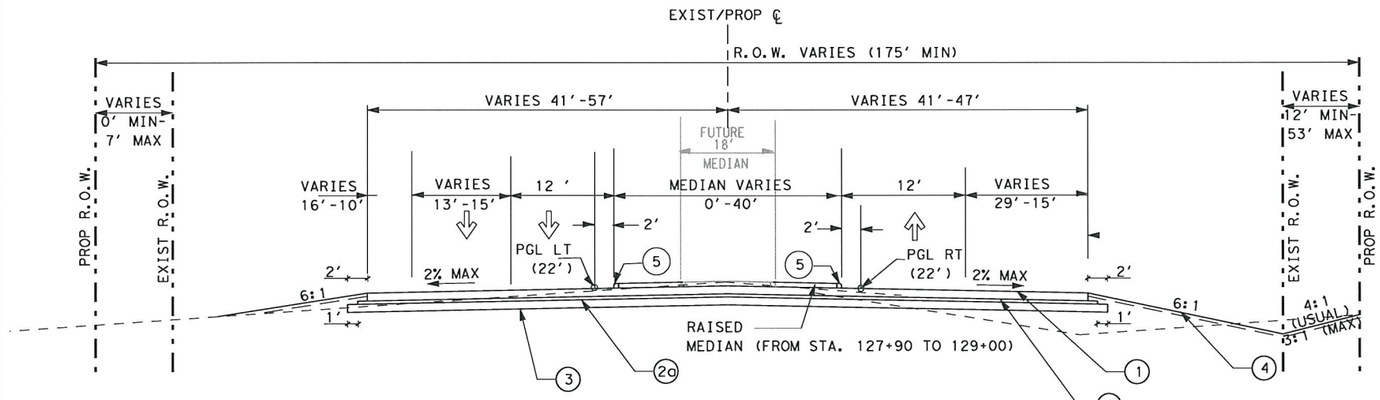

PROPOSED TYPICAL TRANSITION SECTION- RURAL TO 4 LANE URBAN

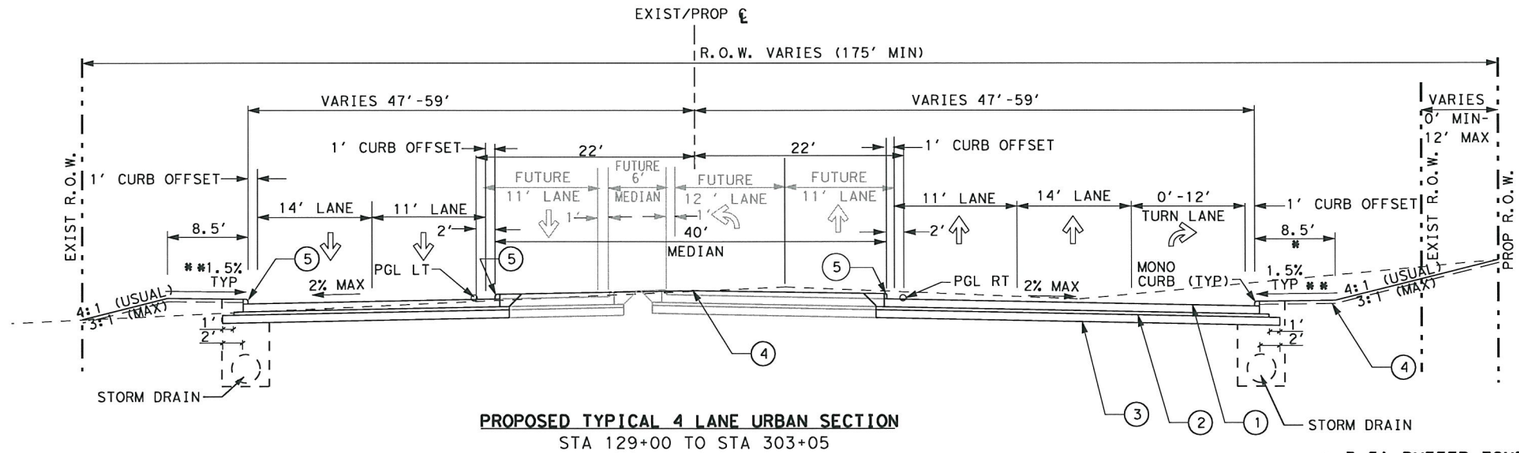

PROPOSED TYPICAL 4 LANE URBAN SECTION
STA 129+00 TO STA 303+05

* 3.5' BUFFER ZONE & 5' FUTURE SIDEWALK (BY OTHERS)
** MAX 2%

LEGEND

1. 8" CONCRETE PAVEMENT (CRCP)
2. 4" ASPHALTIC CONCRETE PAVEMENT (TY B) (PG 64-22)
2a. PRIME COAT (MC-30 OR AE-P) - (FROM STA 121+00 TO 145+00)
3. 8" FLEX BASE OR LIME TREATED SUBGRADE (LTS) W/5% LIME
4. SEEDING/SODDING
5. 5" MONOLITHIC CURB (TY II)

STA 121+00 TO 145+00 - 8" FLEX BASE (TYPE D GR 4)
STA 145+00 TO 303+05 - 8" LTS W/5% LIME

STATE OF TEXAS
HASSAN SAM MOGHADASSI
84231
LICENSED
PROFESSIONAL ENGINEER

H. Moghadassi, P.E. 7/12/11
Signature of Registrant & Date

Typ Xsection.dgn

Texas Department of Transportation
© 2011

SH 289
FM 455 TO N BUS 289C
TYPICAL SECTIONS PROPOSED

SCALE: NOT TO SCALE — Sheet 3 of 4

DESIGN	FED.RD. DIV.NO.	STATE PROJECT NO.		HIGHWAY NO.
SM	6	SEE TITLE SHEET		SH 289
GRAPHICS SM	STATE	DISTRICT	COUNTY	SHEET NO.
CHECK SHM	TEXAS	DALLAS	COLLIN	9
CHECK	CONTROL	SECTION	JOB	
	0091	03	P-201107-01	

...\sheets\TypSec\Typ Xsection.dgn

7/11/2011
T:\DALDGN*S\SH289\Design\sheets\TypSec\Typ Xsection.dgn

TXDOT
16.0000 ft / IN.

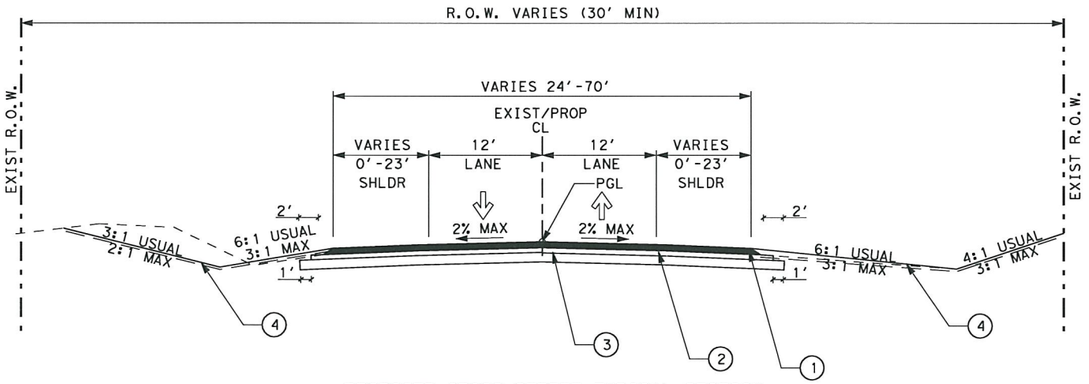

PROPOSED CROSS STREET TYPICAL SECTION
ASPHALT PAVING

BUS 289
CR 134

CR 94
MALLONE

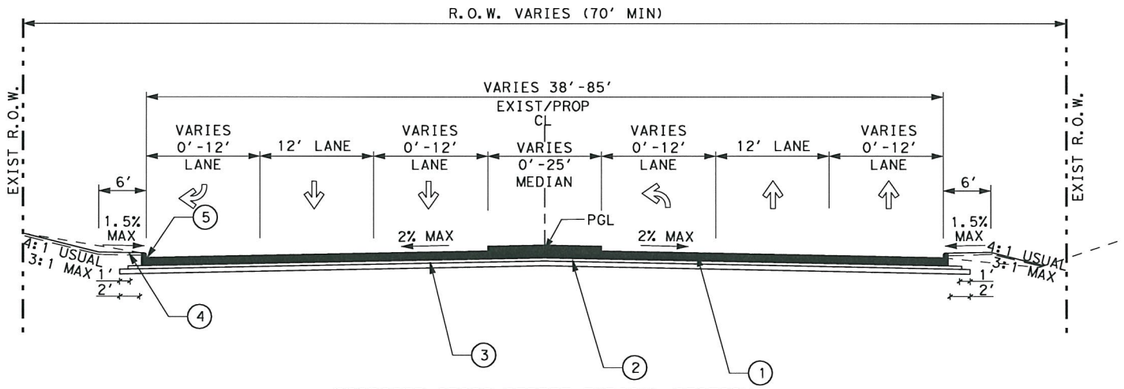

PROPOSED CROSS STREET TYPICAL SECTION
CONCRETE PAVING w/ MEDIAN
CR 96

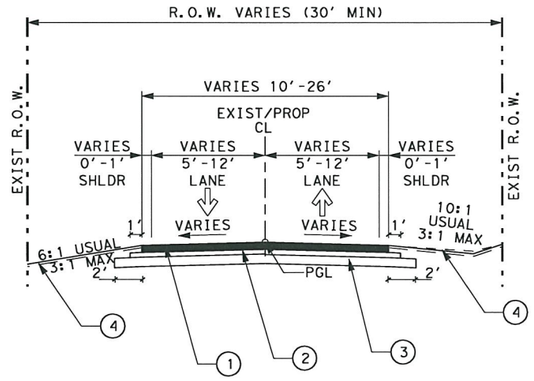

PROPOSED CROSS STREET TYPICAL SECTION
ASPHALT PAVING

CR 99
CR 105
CR 100

CR 95
JAMES
KINNEY
FOUNDERS LANE

LEGEND - CONCRTE SECTION CR 96

1. 8" CONCRETE PAVEMENT (CRCP)
2. 4" ASPHALTIC CONCRETE PAVEMENT (TY B) (PG 64-22)
3. 6" LIME TREATED SUBGRADE (LTS) W/5% LIME
4. SEEDING/SODDING
5. 5" MONOLITHIC CURB (TY II)

SEE APPROPRIATE PLAN SHEETS FOR LIMITS .

LEGEND- PROPOSED ASPHALT SECTION

1. 2" SURFACE COURSE (TY C) (PG 70-22)
2. 6" ASPHALTIC CONCRETE PAVEMENT (TY B) (PG 64-22)
3. 6" LIME TREATED SUBGRADE (LTS) W/4% LIME
4. SEEDING/SODDING

SEE APPROPRIATE PLAN SHEETS FOR LIMITS .

STATE OF TEXAS
HASSAN SAM MOGHADASSI
84231
LICENSED
PROFESSIONAL ENGINEER

H. Moghadassi, P.E. 7/12/11
Signature of Registrant & Date

Typ Xsection.dgn

Texas Department of Transportation
© 2011

SH 289
FM 455 TO N BUS 289C
TYPICAL SECTIONS
PROPOSED - CROSS STREETS

SCALE: NOT TO SCALE Sheet 4 of 4

DESIGN	FED.RD. DIV.NO.	PROJECT NO.		HIGHWAY NO.
SM	6	SEE TITLE SHEET		SH 289
GRAPHICS OE	STATE	DISTRICT	COUNTY	SHEET NO.
CHECK SHM	TEXAS	DALLAS	COLLIN	10
CHECK	CONTROL	SECTION	JOB	
	0091	03	P-201107-01	

7/11/2011
T:\DALDGN#S\SH289\Design\sheets\TypSec\Typ Xsection.dgn
...\sheets\TypSec\Typ Xsection.dgn

$USER$
$SCALE$

SUMMARY OF WORKZONE TRAFFIC CONTROL ITEMS

LOCATION	403 2001 TEMPORARY SPL SHORING	502 2001 BARRICADES, SIGNS & TRAFFIC HANDLING	508 2002 CONSTRUCTING DETOURS	512 2048 PORT CTB (FUR & INST) (F - SHAPE) (TY 1)	512 2050 PORT CTB (MOVE) (F - SHAPE) (TY 1)	512 2052 PORT CTB (REMOVE) (F - SHAPE) (TY 1)	545 2049 CRASH CUSH ATTEN (INSTL) (WORK ZONE)	545 2050 CRASH CUSH ATTEN (MOV & RESET) (WORK ZONE)	545 2051 CRASH CUSH ATTEN (REMOVE) (WORK ZONE)	662 2004 WK ZN PAV MRK NON - REMOV (W) 4" (SLD)	662 2032 WK ZN PAV MRK NON - REMOV (Y) 4" (SLD)	662 2064 WK ZN PAV MRK REMOV (W) 4" (BRK)	662 2067 WK ZN PAV MRK REMOV (W) 4" (SLD)	662 2094 WK ZN PAV MRK REMOV (W) (WORD)	662 2099 WK ZN PAV MRK REMOV (Y) 4" (SLD)	6834 2002 PORTABLE CHANGEABLE MESSAGE SIGN
	SF	MO	SY	LF	LF	LF	EA	EA	EA	LF	LF	EA	LF	EA	LF	EA
PHASE I																
SHEET 1 OF 10	--	10	1088	1890	--	--	3	--	--	1900	1900	--	--	--	--	1
SHEET 2 OF 10	1500		--	1590	--	--	2	--	--	1980	3430	--	--	--	--	--
SHEET 3 OF 10	--		--	2010	--	--	--	--	--	2000	2000	--	--	--	--	--
SHEET 4 OF 10	--		1503.40	1710	--	--	4	--	--	1890	1780	--	--	--	--	--
SHEET 5 OF 10			905.60	1890	--	--	2	--	--	1890	2780	--	--	--	--	--
SHEET 6 OF 10	3300		--	1860	--	--	2	--	--	1920	--	--	--	--	--	--
SHEET 7 OF 10	--		--	1650	--	--	6	--	--	1870	--	--	--	--	--	--
SHEET 8 OF 10	--		3457	1500	--	--	3	--	--	1565	3240	--	--	--	--	--
SHEET 9 OF 10	3500		2466	1590	--	--	6	--	--	1780	3330	--	--	--	--	--
SHEET 10 OF 10	--		--	750	--	300	2	--	--	530	--	--	--	--	--	--
PHASE II																
SHEET 1 OF 10	--	10	--	--	1800	1800	--	3	3	--	--	--	3970	--	3700	--
SHEET 2 OF 10	--		--	--	1410	1410	4	1	5	--	--	--	2820	--	2820	--
SHEET 3 OF 10	--		--	--	1950	1950	--	1	1	--	--	--	3900	--	3900	--
SHEET 4 OF 10	--		--	--	1710	1710	--	2	2	--	--	--	4320	--	4320	--
SHEET 5 OF 10	--		--	--	1920	1920	--	2	2	--	--	--	4160	--	4160	--
SHEET 6 OF 10	--		--	--	1860	1860	--	2	2	--	--	--	3720	--	3720	--
SHEET 7 OF 10	--		--	--	1770	1770	--	2	2	--	--	--	3540	--	3540	--
SHEET 8 OF 10	--		--	--	1380	1380	--	14	14	--	--	--	2760	--	2760	--
SHEET 9 OF 10	--		--	--	1560	1560	--	8	8	--	--	--	3120	--	3120	--
SHEET 10 OF 10	--		--	--	780	780	--	1	1	--	--	830	1560	4	3080	1
PROJECT TOTALS	8300	20	7433	16440	16140	16440	40	36	40	17325	18460	830	35120	4	33870	2

$FILES$

Texas Department of Transportation
© 2011

SH 289
FM 455 TO N BUS 289C
QUANTITY SUMMARY TABLES

Sheet 1 of 17

DESIGN	FED.RD. DIV.NO.	STATE PROJECT NO.		HIGHWAY NO.
SHM	6	SEE TITLE SHEET		SH 289
GRAPHICS OE	STATE	DISTRICT	COUNTY	SHEET NO.
CHECK SM	TEXAS	DALLAS	COLLIN	18
CHECK	CONTROL	SECTION	JOB	
	0091	03	P-201107-01	

$FILEABBREV$

TXDOT
100.0000 ft / IN.

ITEMS TO BE PAID BY THE CITY OF CELINA FOR THE MEDIAN OPENINGS							
LOCATION	0110 2001 EXCAVATION (ROADWAY)	0132 2006 EMBANKMENT (FINAL) (DENS CONT) (TY C)	260 2043 LIME (HYD, COM OR QK) (SLURRY)	260 2006 LIME TRT (EXST MATL) (6")	340 2011 D GR HMA (METH) TY B PG64 - 22	360 2001 CONC PVMT (CONT REINF - CRCP) (8")	500 2001 MOBILIZATION
	CY	CY	TON	SY	TON	SY	LS
AT STA. 207+00.00	138	275	20.64	1651	363	1651	0.007
AT STA. 241+00.00	466	233	17.48	1398	307.46	1398	0.006
PROJECT TOTALS	604	508	38.12	3049	670.46	3049	0.013

LOCATION	538 2001 RIGHT OF WAY MARKERS	730 2002 FULL - WIDTH MOWING
	EA	AC
SHEET 1 OF 18	7	SIX MOWING CYCLES PER YEAR
SHEET 2 OF 18	4	
SHEET 3 OF 18	3	
SHEET 4 OF 18	2	
SHEET 5 OF 18	4	
SHEET 6 OF 18	6	
SHEET 7 OF 18	3	
SHEET 8 OF 18	2	
SHEET 9 OF 18	1	240
SHEET 10 OF 18		
SHEET 11 OF 18		
SHEET 12 OF 18		
SHEET 13 OF 18		
SHEET 14 OF 18	6	
SHEET 15 OF 18	6	
SHEET 16 OF 18	6	
SHEET 17 OF 18	5	
SHEET 18 OF 18		
TOTAL	55	240

SUMMARY OF REMOVAL ITEMS										
LOCATION	104 2017 REMOVING CONC (DRIVEWAYS)	105 2014 REMOV STAB BASE & ASPH PAV (7"-12")	496 2004 REMOV STR (SET)	496 2007 REMOV STR (PIPE)	644 2060 REMOVE SM RD SN SUP & AM	677 2001 ELIM EXT PAV MRK & MRKS (4")	677 2007 ELIM EXT PAV MRK & MRKS (24")	677 2008 ELIM EXT PAV MRK & MRKS (ARROW)	677 2012 ELIM EXT PAV MRK & MRKS (ISLAND)	677 2018 ELIM EXT PAV MRK & MRKS (WORD)
	SY	SY	EA	LF	EA	LF	LF	EA	SF	EA
BEGIN CONSTRUCTION TO STA. 141+00		12731.34	6	130.75	12	5617	27	4	11547	2
STA. 141+00 TO STA. 161+00		14696.65	6	233.00	4	5321	63	11	16668	10
STA. 161+00 TO STA. 181+00		11060.08			9	5452	28			
STA. 181+00 TO STA. 201+00		10131.07	6	61.35	2	4446				
STA. 201+00 TO STA. 221+00		10156.57			3	4500				
STA. 221+00 TO STA. 241+00	337.01	10084.70	4	47.35		4500				
STA. 241+00 TO STA. 261+00	1117.56	10453.45	8	112.75	2	4228	38			
STA. 261+00 TO STA. 281+00	816.51	11513.57	30	476.60	2	4415				
STA. 281+00 TO STA. 301+00	277.67	11795.19	10	278.67	6	5051	52		4405	
STA. 301+00 TO END CONSTRUCTION		1091.65			1	410				
PROJECT TOTALS	2548.75	103714.27	70	1340.47	41	43940	208	15	32620	12

SummariesFromExcel.dgn

Texas Department of Transportation
© 2011

SH 289
FM 455 TO N BUS 289C
QUANTITY SUMMARY TABLES

Sheet 2 of 17

DESIGN	FED. RD. DIV. NO.	STATE PROJECT NO.		HIGHWAY NO.
SHM	6	SEE TITLE SHEET		SH 289
GRAPHICS	STATE	DISTRICT	COUNTY	SHEET NO.
OE	TEXAS	DALLAS	COLLIN	19
CHECK SM	CONTROL	SECTION	JOB	
CHECK	0091	03	P-201107-01	

7/11/2011
I:\dal\dgn\s\sh289\design\sheets\summary\SummariesFromExcel.dgn
...\summary\SummariesFromExcel.dgn

$USER$
$SCALE$

SUMMARY OF ROADWAY ITEMS

LOCATION	100 2002 PREPARING ROW STA	164 2039 DRILL SEEDING (PERM) (URBAN) (CLAY) SY	168 2001 VEGETATIVE WATERING MG	247 2056 FL BS (CMP IN PLC) (TY D GR 4) (FNAL POS) CY	260 2043 LIME (HYD, COM OR QK) (SLURRY) TON	260 2006 LIME TRT (EXST MATL) (6") SY	260 2027 LIME TRT (EXST MATL) (8") SY	310 2005 PRIME COAT (MC-30 OR AE-P) GAL	340 2011 D-GR HMA (METH) TY-B PG64-22 TON	340 2050 D-GR HMA (METH) TY-C PG70-22 TON	360 2001 CONC PVMT (CONT REINF-CRCP) (8") SY	360 2044 CONC PVMT (CONT REINF - CRCP) (HES) (8") SY	432 2001 RIPRAP (CONC) (4IN) CY	360 2018 CONC CURB (MONO) (TY II) LF	530 2038 DRIVEWAYS (CONC) (HES) SY	531 2012 CURB RAMPS (TY 9) EA	536 2002 CONC MEDIAN SY
SHEET 1 OF 18	9.5	11656	337.2	1987.2				1807	1928		8493			831	227.20		14
SHEET 2 OF 18	11	12132	350.9	2267.76	11	1210		2304	2541	121	9368	711		4068	176.30		69
SHEET 3 OF 18	11	13572	392.6	708.62	104		6910	2026	2126		9196			3759	535	2	80
SHEET 4 OF 18	11	10865	314.3		149	1361	9149		2335	151	8215	355	59	4138	118		96
SHEET 5 OF 18	11	11571	334.7		119		7905		1631		6927			4400			
SHEET 6 OF 18	11	9691	280.3		153	1050	9568		2324	102	8639	400		3915			62
SHEET 7 OF 18	11	13458	389.3		122		8150		1686		6928			4456	108		
SHEET 8 OF 18	11	13190	381.5		132		8781		1828		7840			4427	280		31
SHEET 9 OF 18	11	15077	436.1		122		8105		1680		7172			22974			31
SHEET 10 OF 18	11	11966	346.1		108		7186		1483		6297			4000			
SHEET 11 OF 18	11	15476	447.6		123		8225		1702		7247			4486	184		
SHEET 12 OF 18	10	12028	347.9		121		8078		1682		7215			4110	402		58
SHEET 13 OF 18	10	8640	249.9		116		7704		1597		6814			4073	173		
SHEET 14 OF 18	11	9283	268.5		159	1018	10000		2413	102	7506	755		4429	554	2	74
SHEET 15 OF 18	11	8745	253.0		147	1396	8967		2309	144	8031	544		4081	708		68
SHEET 16 OF 18	10	9261	267.9		154	1984	9047		2505	191	8219	400		3476	96		62
SHEET 17 OF 18	10	7913	228.9		118	615	7494		1742	60	6753	200		3884	156.30		
SHEET 18 OF 18	0.55	1312	37.9		30		2002		420		1820			821			
PROJECT TOTALS	182.05	195838	5664.7	4963.58	1988	8634	127271	6137	33932	871	131097	3365	59	86328	3717.80	4	645

SUMMARY OF ROADSIDE FLASHER RELOCATION @ CELINA HIGH SCHOOL

LOCATION	618 2018 CONDT (PVC) (SCHD 40) (2") LF	636 2001 ALUMINUM SIGNS (TY A) SF	682 2025 VEH SIG SEC (12 IN) LED (YEL) EA	684 2010 TRF SIG CBL (TY A) (12 AWG) (5 CONDR) LF	685 2003 REMOVE RDSD FLASH BEACON ASSEMBLY EA	685 2004 INSTL RDSD FLSH BEACON ASSM (SOLAR PWRD) EA	687 2001 PED POLE ASSEMBLY EA
SH289 STA. 135+14 TO 153+12 (SCHOOL)	55	30.5	2	115	4	2	2
PROJECT TOTALS	55	30.5	2	115	4	2	2

SUMMARY OF SIGNING ITEMS

LOCATION	644 2001 INS SM RD SN SUP&AM TY 10BWG(1) SA(P) EA	644 2004 INS SM RD SN SUP&AM TY 10BWG(1) SA(T) EA	644 2027 INS SM RD SN SUP&AM TY S80(1) SA(U) EA	644 2030 INS SM RD SN SUP & AM TY S80(1) SA (U-BM) EA	658 2316 INSTL OM ASSM (OM-2Z) (FLX) GND EA	658 2240 INSTL OM ASSM (D-SW) SZ 1 (FLX) GF2 EA
SH289 STA. 121+00 TO 303+05	13	22	2	3	14	12
PROJECT TOTALS	13	22	2	3	14	12

$FILE$

Texas Department of Transportation
© 2011

SH 289
FM 455 TO N BUS 289C
QUANTITY SUMMARY TABLES

Sheet 3 of 17

DESIGN	FED.RD. DIV.NO.	STATE PROJECT NO.		HIGHWAY NO.
SHM	6	SEE TITLE SHEET		SH 289
GRAPHICS	STATE	DISTRICT	COUNTY	SHEET NO.
OE	TEXAS	DALLAS	COLLIN	20
CHECK	CONTROL	SECTION	JOB	
SM	0091	03	P-201107-01	
CHECK				

$FILEABBREV$

$DATE$
$FILE$

TXDOT
100.0000 ft / IN.

SUMMARY OF PAVEMENT MARKING ITEMS

LOCATION	666 2003 REFL PAV MRK TY I (W) 4" (BRK) (100MIL)	666 2012 REFL PAV MRK TY I (W) 4" (SLD) (100MIL)	666 2036 REFL PAV MRK TY I (W) 8" (SLD) (100MIL)	666 2048 REFL PAV MRK TY I (W) 24" (SLD) (100MIL)	666 2111 REFL PAV MRK TY I (Y) 4" (SLD) (100MIL)	666 2132 REFL PAV MRK TY I (Y) 24" (SLD) (100MIL)	666 2142 REF PAV MRK TY II (W) 4" (BRK)	666 2145 REF PAV MRK TY II (W) 4" (SLD)	666 2153 REF PAV MRK TY II (W) 8" (SLD)	666 2157 REF PAV MRK TY II (W) 24" (SLD)	666 2178 REF PAV MRK TY II (Y) 4" (SLD)	666 2185 REF PAV MRK TY II (Y) 24" (SLD)	672 2017 REFL PAV MRKR TY II-C-R	678 2001 PAV SURF PREP FOR MRK (4")	678 2003 PAV SURF PREP FOR MRK (8")	678 2006 PAV SURF PREP FOR MRK (24")
	LF	LF	LF	LF	LF	LF	LF	LF	LF	LF	LF	LF	EA	LF	LF	LF
BEGIN CONSTRUCTION TO STA. 141+00	2604	6639	1334	1185	3952	365	2604	6639	1334	1185	3952	365	102	13195	1334	1550
STA. 141+00 TO STA. 161+00	3683	3397	1627	60	3662	0	3683	3397	1627	60	3662	0	129	10742	1627	60
STA. 161+00 TO STA. 181+00	3800	3800	345	50	3829	0	3800	3800	0	345	3829	50	66	11429	345	50
STA. 181+00 TO STA. 201+00	4000	4000	345	0	4000	0	4000	4000	345	0	4000	0	68	12000	345	0
STA. 201+00 TO STA. 221+00	4000	4000	684	0	3868	0	4000	4000	684	0	3868	0	85	11868	684	0
STA. 121+00 TO STA. 241+00	4000	4000	345	0	4000	0	4000	4000	345	0	4000	0	68	12000	345	0
STA. 241+00 TO STA. 261+00	3650	3650	685	72	3679	0	3650	3650	685	72	3679	0	81	10979	685	72
STA. 261+00 TO STA. 281+00	3800	3800	685	94	3860	0	3800	3800	685	94	3860	0	83	11460	685	94
STA. 281+00 TO STA. 301+00	3700	3637	873	111	3770	0	3700	3637	873	111	3770	0	91	11107	873	111
STA. 301+00 TO END CONSTRUCTION	410	410	364	0	410	0	410	410	364	0	410	0	23	1230	364	0
PROJECT TOTALS	33647	37333	7287	1572	35030	365	33647	37333	6942	1867	35030	415	796	106010	7287	1937

SUMMARY OF EROSION CONTROL ITEMS

LOCATION	162 2002 BLOCK SODDING	164 2051 DRILL SEED (TEMP) (WARM OR COOL)	168 2001 VEGETATIVE WATERING	506 2003 ROCK FILTER DAMS (INSTALL) (TY 3)	506 2009 ROCK FILTER DAMS (REMOVE)	506 2016 CONSTRUCTION EXITS (INSTALL) (TY 1)	506 2019 CONSTRUCTION EXITS (REMOVE)	506 2034 TEMPORARY SEDIMENT CONTROL FENCE	5049 2001 BIODEGRADABLE EROSION CONTROL LOGS(8")
	SY	SY	MG	LF	LF	SY	SY	LF	LF
SW3P PHASE I									
SHEET 1 OF 10	21	11465	569.6	160	160	77.78	77.78	1875	215
SHEET 2 OF 10	12	7465	370.82	36	36	77.78	77.78	1969	224
SHEET 3 OF 10	38	7810	389.21	280	280	77.78	77.78	1831	200
SHEET 4 OF 10	17	5736	285.32	275	275	77.78	77.78	1925	225
SHEET 5 OF 10	11.3	7854	390.01	90	90	0	0	1935	215
SHEET 6 OF 10	22	7538	374.68	140	140	77.78	77.78	1900	250
SHEET 7 OF 10	26	6925	344.68	245	245	77.78	77.78	1830	280
SHEET 8 OF 10	0	5294	262.51	0	0	77.78	77.78	1900	100
SHEET 9 OF 10	0	4847	240.4	0	0	77.78	77.78	2010	135
SHEET 10 OF 10	0	2080	103.19	0	0	77.78	77.78	1035	60
SW3P PHASE II									
SHEET 1 OF 10	29	11251	559.39	0	0	77.78	77.78	1899	185
SHEET 2 OF 10	10	9104	451.98	0	0	77.78	77.78	1934	247
SHEET 3 OF 10	32	6417	319.59	0	0	77.78	77.78	1911	297
SHEET 4 OF 10	80	7230	362.53	0	0	77.78	77.78	1848	340
SHEET 5 OF 10	12.6	11667	579.15	0	0	0	0	1972	275
SHEET 6 OF 10	23.58	8967	445.54	0	0	77.78	77.78	1912	350
SHEET 7 OF 10	29	10059	500.28	0	0	77.78	77.78	1859	360
SHEET 8 OF 10	0	4649	230.53	0	0	77.78	77.78	2004	120
SHEET 9 OF 10	0	4829	239.5	0	0	0	0	1913	205
SHEET 10 OF 10	0	1965	97.49	0	0	77.78	77.78	940	120
PROJECT TOTALS	363.48	143152	7116.4	1226	1226	1322.26	1322.26	36402	4403

SummariesFromExcel.dgn

Texas Department of Transportation
© 2011

SH 289
FM 455 TO N BUS 289C
QUANTITY SUMMARY TABLES

Sheet 4 of 17

DESIGN	FED.RD. DIV.NO.	STATE PROJECT NO.		HIGHWAY NO.
SHM	6	SEE TITLE SHEET		SH 289
GRAPHICS OE	STATE	DISTRICT	COUNTY	SHEET NO.
CHECK SM	TEXAS	DALLAS	COLLIN	21
CHECK	CONTROL	SECTION	JOB	
	0091	03	621	

P-201107-01

...\summary\SummariesFromExcel.dgn

7/11/2011
t:\dal\dgn*s\sh289\design\sheets\summary\SummariesFromExcel.dgn

TXDOT
1.0000 ft / IN.

CULVERTS:

ITEM NO.		402	403	459	(462)						464	465
		2001	2001	2011	2003	2008	2009	2012	2013	2022	2014	2211
CULVERT NAME	LOCATION	TRENCH EXCAVATION PROTECTION (LF)	TEMPORARY SPL SHORING (SF)	GABION MATTRESS (12") (GALV.) (SY)	CONC BOX CULV (4'x2') (LF)	CONC BOX CULV (5'x4') (LF)	CONC BOX CULV (5'x5') (LF)	CONC BOX CULV (6'x5') (LF)	CONC BOX CULV (6'x6') (LF)	CONC BOX CULV (8'x7') (LF)	RC PIPE (CL III) (66") (LF)	JUNCTION BOX (SPL) (EA)
CULVERT B	SH 289 STA. 141+70.50	156.00									156.00	1.00
CULVERT C	SH 289 STA. 161+51.94	133.00	700.71	110.83			266.00					
CULVERT D	SH 289 STA. 174+95.00	150.50	1181.00	505.19						301.00		
CULVERT E	SH 289 STA. 185+17.00	132.00	881.00	186.05					264.00			
CULVERT F	SH 289 STA. 206+65.00	122.00	248.31	181.84	122.00							
CULVERT H	SH 289 STA. 243+48.54	167.00	737.75	249.41		167.00						
CULVERT I	SH 289 STA. 245+77.00	215.00	1285.55	302.49				215.00				
36" PIPE	SH 289 STA.166+54.5, 47'LT											
TOTALS:		1075.5	5034.32	1535.81	122.00	167.00	266.00	215.00	264.00	301.00	156.00	1.00

MBGF:

ITEM NO.		540		544	432
		2001	2005	2001	2039
CULVERT NAME	LOCATION	MTL W-BEAM GD FEN (TIM POST) (LF)	TERMINAL ANCHOR SECTION (EA)	GUARDRAIL END TREATMENT (INSTALL) (EA)	RIPRAP (MOW STRIP) (4 IN) (CY)
CULVERT A	SH 289 STA. 122+87.20	162.5	3	1	19.54
CULVERT G	SH 289 STA. 222+85.00	443.75	2	2	62.21
TOTALS:		606.25	5	3	81.75

WINGWALLS & HEADWALLS:

ITEM NO.		(466)								(496)			
		2049	2050	2051	2052	2053	2288	2069	2074	2001	2002	2006	2016
CULVERT NAME	LOCATION	WINGWALL (PW) (HW=5'-0") (EA)	WINGWALL (PW) (HW=6'-0") (EA)	WINGWALL (PW) (HW=7'-0") (EA)	WINGWALL (PW) (HW=8'-0") (EA)	WINGWALL (PW) (HW=9'-0") (EA)	WINGWALL (PW) (HW=8'-6") (EA)	HEADWALL (CH-FW-0) (DIA=36") (EA)	HEADWALL (CH-FW-0) (DIA=66") (EA)	REMOVE STR (BOX CULVERT) (EA)	REMOV STR (INLET) (EA)	REMOV STR (HEADWALL) (EA)	REMOV STR (PIPE) (EA)
CULVERT B	SH 289 STA. 141+70.50								1.00		1.00	1.00	1.00
CULVERT C	SH 289 STA. 161+51.94			1.00		1.00				1.00			
CULVERT D	SH 289 STA. 174+95.00						2.00			1.00			
CULVERT E	SH 289 STA. 185+17.00				1.00		1.00			3.00			
CULVERT F	SH 289 STA. 206+65.00	1.00	1.00									2.00	1.00
CULVERT H	SH 289 STA. 243+48.54		1.00				1.00					2.00	1.00
CULVERT I	SH 289 STA. 245+77.00			1.00	2.00							2.00	1.00
CULVERT A	SH 289 STA. 122+87.20									2.00			
CULVERT G	SH 289 STA. 222+85.00									2.00			
36" PIPE	SH 289 STA.166+54.5, 47'LT							1.00					
	TOTALS:	1.00	2.00	2.00	3.00	1.00	4.00	1.00	1.00	9.00	1.00	7.00	4.00

BRIDGE CLASS CULVERTS:

ITEM NO.		402	403	459	462		466	
		2001	2001	2011	2031	2019	2307	2052
CULVERT NAME	LOCATION	TRENCH EXCAVATION PROTECTION (LF)	TEMPORARY SPL SHORING (SF)	GABION MATTRESS (12") (GALV.) (SY)	CONC BOX CULV (10'x7') (LF)	CONC BOX CULV (8'x4') (LF)	WINGWALL (PW) (HW=5'-5") (EA)	WINGWALL (PW) (HW=8'-0") (EA)
CULVERT A	SH 289 STA. 122+87.20	150.00	1050.43	621.00		505.20	2.00	
CULVERT G	SH 289 STA. 222+85.00	70.00	1538.78	182.12	435.00			2.00
TOTALS:		220.00	2589.21	803.12	435.00	505.20	2.00	2.00

SUMMARY OF DRIVEWAY CULVERTS

LOCATION OF ℄ STATION		464-2003	467-2209	467-2222	400-2003
FROM	TO	18" RCP	S.E.T. (TY II) (3:1 SLOPE)	S.E.T. (TY II) (4:1 SLOPE)	*STRUCTURE EXCAVATION
		LF	EA	EA	CY
SH 289 ℄ STA.121+67.80, 79.50' RT. OFF.	SH 289 ℄ STA.122+20.20, 80.80' RT. OFF.	52.00	-	2	20.40
SH 289 ℄ STA. 207+10.50, 76.00' LT. OFF.	SH 289 ℄ STA. 207+48.50, 76.50' LT. OFF.	38.00	2	-	12.56
TOTALS:		90.00	2	2	32.96

* FOR CONTRACTORS INFORMATION ONLY

Inlet&StormSewer*SUMMARY.dgn

Texas Department of Transportation
© 2011

SH 289
FM 455 TO N BUS 289C
CULVERTS SUMMARY TABLE

Sheet 5 of 17

DESIGN	FED.RD. DIV.NO.	STATE PROJECT NO.		HIGHWAY NO.
SHM	6	SEE TITLE SHEET		SH 289
GRAPHICS OE	STATE	DISTRICT	COUNTY	SHEET NO.
CHECK SM	TEXAS	DALLAS	COLLIN	22
CHECK	CONTROL	SECTION	JOB	
	0091	03	P-201107-01	

...\Inlet&StormSewer*SUMMARY.dgn

7/11/2011
I:\dal\dgn\s\sh289\design\sheets\DRNG\Inlet&StormSewer*SUMMARY.dgn

TXDOT
100.0000 ft / IN.

SUMMARY OF EARTHWORK ITEMS		
	110	132
	2001	2006
LOCATION	EXCAVATION (ROADWAY)	EMBANKMENT (FINAL) (DENS CONT) (TY C)
	CY	CY
STA. 121+00 TO 122+00	276	316
STA. 122+00 TO 123+00	199	618
STA. 123+00 TO 124+00	124	744
STA. 124+00 TO 125+00	254	563
STA. 125+00 TO 126+00	475	295
STA. 126+00 TO 127+00	588	99
STA. 127+00 TO 128+00	480	121
STA. 128+00 TO 129+00	374	172
STA. 129+00 TO 130+00	340	157
STA. 130+00 TO 131+00	253	126
STA. 131+00 TO 132+00	225	153
STA. 132+00 TO 133+00	185	221
STA. 133+00 TO 134+00	439	306
STA. 134+00 TO 135+00	451	289
STA. 135+00 TO 136+00	167	202
STA. 136+00 TO 137+00	123	197
STA. 137+00 TO 138+00	222	141
STA. 138+00 TO 139+00	472	52
STA. 139+00 TO 140+00	781	112
STA. 140+00 TO 141+00	820	465
STA. 141+00 TO 141+70.50	386	781
STA. 141+70.50 TO 142+00	113	392
STA. 142+00 TO 143+00	328	1092
STA. 143+00 TO 144+00	214	869
STA. 144+00 TO 145+00	71	952
STA. 145+00 TO 146+00	0	1683
STA. 146+00 TO 147+00	0	2069
STA. 147+00 TO 148+00	0	2374
STA. 148+00 TO 149+00	0	2435
STA. 149+00 TO 150+00	0	1722
STA. 150+00 TO 151+00	0	1109
STA. 151+00 TO 152+00	6	642
STA. 152+00 TO 153+00	166	294
STA. 153+00 TO 153+43.50	122	103
STA. 153+43.50 TO 155+00	458	650
STA. 155+00 TO 156+00	398	393
STA. 156+00 TO 157+00	452	280
STA. 157+00 TO 158+00	436	315
STA. 158+00 TO 159+00	348	418
STA. 159+00 TO 160+00	226	552
STA. 160+00 TO 161+00	156	741
STA. 161+00 TO 162+00	137	892

SUMMARY OF EARTHWORK ITEMS		
	110	132
	2001	2006
LOCATION	EXCAVATION (ROADWAY)	EMBANKMENT (FINAL) (DENS CONT) (TY C)
	CY	CY
STA. 162+00 TO 162+69	100	555
STA. 162+69 TO 163+00	50	211
STA. 163+00 TO 164+00	201	706
STA. 164+00 TO 165+00	164	861
STA. 165+00 TO 166+00	64	1137
STA. 166+00 TO 166+54.50	15	740
STA. 166+54.50 TO 167+00	6	653
STA. 167+00 TO 168+00	4	1277
STA. 168+00 TO 169+00	62	1052
STA. 169+00 TO 170+00	128	927
STA. 170+00 TO 171+00	149	725
STA. 171+00 TO 172+00	155	556
STA. 172+00 TO 173+00	88	601
STA. 173+00 TO 174+00	38	843
STA. 174+00 TO 175+00	54	1194
STA. 175+00 TO 176+00	44	1292
STA. 176+00 TO 177+00	29	1125
STA. 177+00 TO 178+00	60	803
STA. 178+00 TO 179+00	247	372
STA. 179+00 TO 180+00	475	146
STA. 180+00 TO 181+00	609	136
STA. 181+00 TO 182+00	476	278
STA. 182+00 TO 183+00	237	630
STA. 183+00 TO 184+00	157	1095
STA. 184+00 TO 185+00	138	1577
STA. 185+00 TO 186+00	186	1482
STA. 186+00 TO 187+00	297	796
STA. 187+00 TO 188+00	422	340
STA. 188+00 TO 189+00	389	149
STA. 189+00 TO 190+00	273	74
STA. 190+00 TO 191+00	225	64
STA. 191+00 TO 192+00	212	47
STA. 192+00 TO 193+00	285	19
STA. 193+00 TO 194+00	444	3
STA. 194+00 TO 195+00	559	0
STA. 195+00 TO 196+00	711	0
STA. 196+00 TO 197+00	880	0
STA. 197+00 TO 198+00	965	0
STA. 198+00 TO 199+00	902	10
STA. 199+00 TO 200+00	610	75
STA. 200+00 TO 201+00	267	225
STA. 201+00 TO 202+00	71	506

SUMMARY OF EARTHWORK ITEMS		
	110	132
	2001	2006
LOCATION	EXCAVATION (ROADWAY)	EMBANKMENT (FINAL) (DENS CONT) (TY C)
	CY	CY
STA. 202+00 TO 203+00	40	1058
STA. 203+00 TO 204+00	29	1673
STA. 204+00 TO 205+00	8	1908
STA. 205+00 TO 206+00	13	1797
STA. 206+00 TO 207+00	67	1432
STA. 207+00 TO 208+00	136	1095
STA. 208+00 TO 209+00	213	1130
STA. 209+00 TO 210+00	350	1249
STA. 210+00 TO 211+00	462	1156
STA. 211+00 TO 212+00	548	978
STA. 212+00 TO 213+00	523	826
STA. 213+00 TO 214+00	437	621
STA. 214+00 TO 215+00	415	396
STA. 215+00 TO 216+00	362	198
STA. 216+00 TO 217+00	344	69
STA. 217+00 TO 218+00	470	68
STA. 218+00 TO 219+00	738	124
STA. 219+00 TO 220+00	1080	173
STA. 220+00 TO 221+00	1359	246
STA. 221+00 TO 222+00	1505	355
STA. 222+00 TO 223+00	1555	646
STA. 223+00 TO 224+00	1578	638
STA. 224+00 TO 225+00	1427	421
STA. 225+00 TO 226+00	1173	367
STA. 226+00 TO 227+00	1016	300
STA. 227+00 TO 228+00	906	281
STA. 228+00 TO 229+00	1022	130
STA. 229+00 TO 230+00	1061	3
STA. 230+00 TO 231+00	869	0
STA. 231+00 TO 232+00	777	0
STA. 232+00 TO 233+00	632	20
STA. 233+00 TO 234+00	399	126
STA. 234+00 TO 235+00	184	313
STA. 235+00 TO 236+00	85	406
STA. 236+00 TO 237+00	227	269
STA. 237+00 TO 238+00	513	73
STA. 238+00 TO 239+00	794	3
STA. 239+00 TO 240+00	937	0
STA. 240+00 TO 241+00	946	4
STA. 241+00 TO 242+00	764	226
STA. 242+00 TO 243+00	569	772
STA. 243+00 TO 244+00	504	1394

SummariesFromExcel.dgn

Texas Department of Transportation
© 2011

SH 289
FM 455 TO N BUS 289C
QUANTITY SUMMARY TABLES

Sheet 6 of 17

DESIGN	FED.RD. DIV.NO.	STATE PROJECT NO.		HIGHWAY NO.
SHM	6	SEE TITLE SHEET		SH 289
GRAPHICS	STATE	DISTRICT	COUNTY	SHEET NO.
OE	TEXAS	DALLAS	COLLIN	23
CHECK SM	CONTROL	SECTION	JOB	
CHECK	0091	03	021	

P-201107-01

7/11/2011
T:\dal\dgn\s\sh289\design\sheets\summary\SummariesFromExcel.dgn
...\summary\SummariesFromExcel.dgn

TXDOT
100.0000 ft / IN.

SUMMARY OF EARTHWORK ITEMS		
LOCATION	110 2001 EXCAVATION (ROADWAY)	132 2006 EMBANKMENT (FINAL) (DENS CONT) (TY C)
	CY	CY
STA. 244+00 TO 245+00	402	1667
STA. 245+00 TO 246+00	279	1271
STA. 246+00 TO 247+00	191	1262
STA. 247+00 TO 248+00	129	1464
STA. 248+00 TO 249+00	71	1137
STA. 249+00 TO 250+00	58	579
STA. 250+00 TO 251+00	44	254
STA. 251+00 TO 252+00	17	321
STA. 252+00 TO 253+00	7	371
STA. 253+00 TO 254+00	3	455
STA. 254+00 TO 255+00	24	414
STA. 255+00 TO 256+00	92	258
STA. 256+00 TO 257+00	168	138
STA. 257+00 TO 258+00	216	74
STA. 258+00 TO 259+00	216	34
STA. 259+00 TO 260+00	370	14
STA. 260+00 TO 261+00	502	3
STA. 261+00 TO 262+00	443	5
STA. 262+00 TO 263+00	452	4
STA. 263+00 TO 264+00	532	5
STA. 264+00 TO 265+00	505	13
STA. 265+00 TO 266+00	440	38
STA. 266+00 TO 267+00	414	182
STA. 267+00 TO 268+00	436	267
STA. 268+00 TO 269+00	423	339
STA. 269+00 TO 270+00	310	319
STA. 270+00 TO 271+00	315	137
STA. 271+00 TO 272+00	297	83
STA. 272+00 TO 273+00	245	80
STA. 273+00 TO 274+00	205	152

SUMMARY OF EARTHWORK ITEMS		
LOCATION	110 2001 EXCAVATION (ROADWAY)	132 2006 EMBANKMENT (FINAL) (DENS CONT) (TY C)
	CY	CY
STA. 274+00 TO 275+00	122	277
STA. 275+00 TO 276+00	116	291
STA. 276+00 TO 277+00	270	206
STA. 277+00 TO 278+00	396	164
STA. 278+00 TO 279+00	285	159
STA. 279+00 TO 280+00	243	116
STA. 280+00 TO 281+00	263	99
STA. 281+00 TO 282+00	198	100
STA. 282+00 TO 283+00	156	138
STA. 283+00 TO 284+00	114	226
STA. 284+00 TO 285+00	114	203
STA. 285+00 TO 286+00	154	126
STA. 286+00 TO 287+00	366	77
STA. 287+00 TO 288+00	671	29
STA. 288+00 TO 289+00	731	20
STA. 289+00 TO 290+00	771	32
STA. 290+00 TO 291+00	903	36
STA. 291+00 TO 292+00	991	76
STA. 292+00 TO 293+00	1057	99
STA. 293+00 TO 294+00	1134	59
STA. 294+00 TO 295+00	1180	24
STA. 295+00 TO 296+00	1140	33
STA. 296+00 TO 297+00	1104	62
STA. 297+00 TO 298+00	1051	92
STA. 298+00 TO 299+00	988	101
STA. 299+00 TO 300+00	953	71
STA. 300+00 TO 301+00	930	27
STA. 301+00 TO 302+00	927	4
STA. 302+00 TO 303+00	941	0
PROJECT TOTALS	75825	86620

7/11/2011
t:\dal\dgn*s\sh289\design\sheets\summary\SummariesFromExcel.dgn

SummariesFromExcel.dgn

Texas Department of Transportation
© 2011

SH 289

FM 455 TO N BUS 289C

QUANTITY SUMMARY TABLES

DESIGN	FED. RD. DIV. NO.	STATE PROJECT NO.		HIGHWAY NO.
SHM	6	SEE TITLE SHEET		SH 289
GRAPHICS	STATE	DISTRICT	COUNTY	SHEET NO.
OE	TEXAS	DALLAS	COLLIN	24
CHECK	CONTROL	SECTION	JOB	
SM	0091	03	[illegible]	
CHECK				

P-201107-01

...\summary\SummariesFromExcel.dgn

TXDOT
1.0000 ft / IN.

SUMMARY OF INLET

LINE	INLET OR MANHOLE NO.	LOCATION	HEIGHT (FT)	465-2005 MANH (COMPL) (TY M) EA	465-2115 INLET (COMPL) (TY I) (MOD) EA	465-2221 INLET EXT (TY I) EA	465-2322 INLET TYPE C (3-GRATE) EA	465-2507 INLET (COMPL) (DROP) (TY C) (1-GRATE) EA
A1	CI-A1-I	SH 289 STA. 139+00.00, 48.00' LT	6.5		1.0	2.0		
	CI-A2-I	SH 289 STA. 137+40.00, 47.00' LT	8.5		1.0	2.0		
	CI-A3-I	SH 289 STA. 136+00.00, 47.00' LT	7.5		1.0	3.0		
	CI-A4-I	SH 289 STA. 134+70.00, 47.00' LT	8.5		1.0	3.0		
	CI-A5-I	SH 289 STA. 133+47.00, 47.00' LT	8.0		1.0	2.0		
	CI-A6-I	SH 289 STA. 132+30.00, 47.00' LT	8.0		1.0	2.0		
	CI-A7-I	SH 289 STA. 131+10.00, 47.00' LT	8.0		1.0	2.0		
	CI-A8-I	SH 289 STA. 130+10.00, 47.00' LT	10.0		1.0	2.0		
	CI-A9-I	SH 289 STA. 129+10.00, 47.00' LT	5.5		1.0	2.0		
A2	CI-A10	SH 289 STA. 139+18.00, 47.00' RT	6.0		1.0	1.0		
	CI-A11	SH 289 STA. 137+40.00, 47.00' RT	5.0		1.0	1.0		
	CI-A12	SH 289 STA. 136+00.00, 47.00' RT	5.5		1.0	1.0		
	CI-A13	SH 289 STA. 135+25.00, 47.00' RT	5.5		1.0	1.0		
	CI-A14	SH 289 STA. 132+90.00, 59.00' RT	5.0		1.0	1.0		
	CI-A15	SH 289 STA. 131+66.00, 59.00' RT	4.5		1.0	1.0		
	CI-A16	SH 289 STA. 130+52.00, 59.00' RT	4.5		1.0	2.0		
	CI-A17	SH 289 STA. 129+60.00, 54.00' RT	4.5		1.0	1.0		
	CI-A18	SH 289 STA. 129+10.00, 47.00' RT	10.0		1.0	1.0		
	MH-A19	SH 289 STA. 126+25.00, 51.00' RT	15.0	1.0				
BN1 & BS1	CI-B2-I	SH 289 STA. 140+84.00, 61.24' LT	4.5		1.0	1.0		
	CI-B1-I	SH 289 STA. 143+31.50, 59.00' LT	4.5		1.0	1.0		
BN3 & BS3	CI-BN3-I	SH 289 STA. 141+65.79, 81.19' LT					1.0	
	CI-BS3-I	SH 289 STA. 141+75.21, 81.19' LT					1.0	
BN2 & BS2	CI-B4-I	SH 289 STA. 140+84.00, 47.00' RT	4.5		1.0	1.0		
	CI-B3-I	SH 289 STA. 143+31.50, 47.00' RT	4.5		1.0	1.0		
CN1	CI-C1-I	SH 289 STA. 148+16.00, 59.00' LT	4.5		1.0	2.0		
	CI-C2-I	SH 289 STA. 149+25.00, 59.00' LT	4.5		1.0	2.0		
	CI-C3-I	SH 289 STA. 150+60.00, 59.00' LT	4.5		1.0	2.0		
	CI-C4-I	SH 289 STA. 151+87.73, 48.50' LT	4.5		1.0	2.0		
	CI-C5-I	SH 289 STA. 153+42.50, 48.20' LT	7.5		1.0	1.0		
	GI-C5-E	SH 289 STA. 153+43.50, 67.00' LT	4.0				2.0	
	CI-C6-E	SH 289 STA. 155+33.00, 59.13' LT	6.5		1.0	3.0		
	CI-C7-I	SH 289 STA. 156+53.86, 59.00' LT	7.0		1.0	3.0		
	CI-C8-I	SH 289 STA. 158+24.50, 59.00' LT	7.5		1.0	3.0		

SUMMARY OF INLET

LINE	INLET OR MANHOLE NO.	LOCATION	HEIGHT (FT)	465-2005 MANH (COMPL) (TY M) EA	465-2115 INLET (COMPL) (TY I) (MOD) EA	465-2221 INLET EXT (TY I) EA	465-2322 INLET TYPE C (3-GRATE) EA	465-2507 INLET (COMPL) (DROP) (TY C) (1-GRATE) EA
	CI-C9-I	SH 289 STA. 161+26.50, 47.00' LT	8.0		1.0	2.0		
CN2	CI-C12	SH 289 STA. 147+81.00, 47.00' RT	4.5		1.0	1.0		
	CI-C13	SH 289 STA. 149+16.00, 47.00' RT	4.5		1.0	1.0		
	CI-C14	SH 289 STA. 150+40.00, 47.00' RT	4.5		1.0	1.0		
	CI-C15	SH 289 STA. 151+88.00, 47.00' RT	4.5		1.0	1.0		
	CI-C16	SH 289 STA. 152+81.00, 47.00' RT	4.5		1.0	1.0		
	CI-C17	SH 289 STA. 154+91.00, 47.00' RT	4.5		1.0	1.0		
	CI-C18	SH 289 STA. 157+41.00, 47.00' RT	4.5		1.0	1.0		
	CI-C19	SH 289 STA. 159+91.00, 47.00' RT	5.5		1.0	1.0		
	CI-C20	SH 289 STA. 161+26.50, 47.00' RT	7.5		1.0	1.0		
CS1	MH-CS9	SH 289 STA. 161+67.00, 52.00' LT	10.5	1.0				
	GI-C10a-E	SH 289 STA. 162+69.00, 66.00' LT	3.0				1.0	
	CI-C10-I	SH 289 STA. 164+40.86, 47.00' LT	6.0		1.0	2.0		
	CI-C11-I	SH 289 STA. 166+54.50, 47.00' LT	6.0		1.0	1.0		
CS2	CI-C21	SH 289 STA. 164+40.85, 47.00' RT	5.0		1.0	2.0		
	CI-C22	SH 289 STA. 166+54.50, 47.00' RT	5.0		1.0	1.0		
DN1	CI-DN2	SH 289 STA. 170+99.00, 47.00' LT	4.5		1.0	1.0		
	GI-DN-DI1	SH 289 STA. 172+00.00, 63.00' LT	4.0					1.0
	CI-DN4	SH 289 STA. 172+49.00, 47.00' LT	4.5		1.0	1.0		
	CI-DN6	SH 289 STA. 173+99.00, 47.00' LT	4.5		1.0	1.0		
	CI-DN8	SH 289 STA. 174+99.70, 47.00' LT	4.5		1.0	1.0		
DN2	CI-DN1	SH 289 STA. 171+11.00, 47.00' RT	4.5		1.0	1.0		
	CI-DN3	SH 289 STA. 172+60.00, 47.00' RT	4.5		1.0	1.0		
	CI-DN5	SH 289 STA. 174+11.00, 47.00' RT	4.5		1.0	1.0		
DS1	CI-DS1	SH 289 STA. 175+00.00, 47.00' RT	8.5		1.0	2.0		
	MH-DS	SH 289 STA. 177+21.00, 47.00' RT	4.0	1.0				
	CI-DS3	SH 289 STA. 179+54.46, 47.00' RT	5.5		1.0	2.0		
	CI-DS5	SH 289 STA. 181+52.00, 49.00' RT	4.5		1.0	1.0		
	CI-DS7	SH 289 STA. 183+39.00, 47.00' RT	4.5		1.0	1.0		
SHEET TOTALS:				**3.0**	**55.0**	**82.0**	**5.0**	1.0

Inlet&StormSewer*SUMMARY.dgn

STATE OF TEXAS
CHRISTOPHER P. ROCHA
107690
LICENSED
PROFESSIONAL ENGINEER

Chris Rocha, P.E. 7/13/11
Signature of Registrant & Date

STATE OF TEXAS
HASSAN SAM MOGHADASSI
84231
LICENSED
PROFESSIONAL ENGINEER

H. Moghadassi, P.E. 7/12/11
Signature of Registrant & Date

Texas Department of Transportation
© 2011

SH 289
FM 455 TO N BUS 289C
INLET & MANHOL SUMMARY TABLE

Sheet 8 of 17

DESIGN	FED.RD. DIV.NO.	STATE PROJECT NO.		HIGHWAY NO.
SHM	6	SEE TITLE SHEET		SH 289
GRAPHICS OE	STATE	DISTRICT	COUNTY	SHEET NO.
CHECK SM	TEXAS	DALLAS	COLLIN	25
CHECK	CONTROL	SECTION	JOB	
	0091	03	201107-01	

P-201107-01

7/11/2011
t:\dal\dgn*s\sh289\design\sheets\DRNG\Inlet&StormSewer*SUMMARY.dgn
...\Inlet&StormSewer*SUMMARY.dgn

TXDOT
1.0000 ft / IN.

SUMMARY OF INLET

LINE	INLET OR MANHOLE NO.	LOCATION	HEIGHT (FT)	465-2005 MANH (COMPL) (TY M) EA	465-2115 INLET (COMPL) (TY I) (MOD) EA	465-2221 INLET EXT (TY I) EA	465-2322 INLET TYPE C (3-GRATE) EA	465-2507 INLET (COMPL) (DROP) (TY C) (1-GRATE) EA
		TOTAL FROM PREVIOUS SHEET:		**3.0**	**55.0**	**82.0**	**2.0**	**1.0**
DS2	CI-DS2	SH 289 STA. 179+54.47, 48.00' LT	5.0		1.0	2.0		
	CI-DS4	SH 289 STA. 181+61.50, 47.00' LT	4.5		1.0	1.0		
	CI-DS6	SH 289 STA. 183+51.00, 47.00' LT	4.5		1.0	1.0		
E1	CI-E1	SH 289 STA. 200+00.00, 47.00' LT	4.5		1.0	2.0		
	CI-E2	SH 289 STA. 198+00.00, 47.00' LT	4.5		1.0	3.0		
	CI-E3	SH 289 STA. 196+50.00, 47.00' LT	4.0		1.0	3.0		
	CI-E4	SH 289 STA. 195+00.00, 47.00' LT	4.0		1.0	3.0		
	CI-E5	SH 289 STA. 193+50.00, 47.00' LT	8.5		1.0	3.0		
	CI-E6	SH 289 STA. 192+00.00, 47.00' LT	5.0		1.0	3.0		
	CI-E7	SH 289 STA. 190+50.00, 47.00' LT	6.5		1.0	3.0		
	CI-E8	SH 289 STA. 189+00.00, 47.00' LT	10.0		1.0	3.0		
	GI-E9GI	SH 289 STA. 188+00.00, 66.50' LT	6.0				1.0	
	CI-E10	SH 289 STA. 187+50.00, 47.00' LT	10.0		1.0	1.0		
	CI-E11	SH 289 STA. 186+00.00, 47.00' LT	8.0		1.0	1.0		
E2	CI-E12	SH 289 STA. 200+00.00, 47.00' RT	4.5		1.0	1.0		
	CI-E13	SH 289 STA. 198+00.00, 47.00' RT	4.0		1.0	1.0		
	CI-E14	SH 289 STA. 196+50.00, 47.00' RT	4.0		1.0	1.0		
	CI-E15	SH 289 STA. 195+00.00, 47.00' RT	4.0		1.0	3.0		
	CI-E16	SH 289 STA. 193+50.00, 47.00' RT	4.5		1.0	1.0		
	CI-E17	SH 289 STA. 192+00.00, 47.00' RT	4.0		1.0	1.0		
	CI-E18	SH 289 STA. 190+50.00, 47.00' RT	7.5		1.0	1.0		
	CI-E19	SH 289 STA. 189+00.00, 47.00' RT	6.0		1.0	1.0		
	CI-E20	SH 289 STA. 187+50.00, 47.00' RT	7.5		1.0	1.0		
	CI-E21	SH 289 STA. 186+00.00, 47.00' RT	7.5		1.0	1.0		
F1	GI-FGINLT	SH 289 STA. 203+00.00, 77.68' LT	4.0				1.0	
	CI-F1	SH 289 STA. 203+63.00, 47.00' LT	7.5		1.0	1.0		
	CI-F2	SH 289 STA. 204+85.00, 47.00' LT	7.5		1.0	1.0		
	CI-F3	SH 289 STA. 206+00.00, 47.00' LT	6.0		1.0	1.0		
F2	CI-F4	SH 289 STA. 203+63.00, 47.00' RT	4.5		1.0	1.0		
	CI-F5	SH 289 STA. 204+85.00, 47.00' RT	4.5		1.0	1.0		
	CI-F6	SH 289 STA. 206+00.00, 47.50' RT	6.5		1.0	1.0		

SUMMARY OF INLET

LINE	INLET OR MANHOLE NO.	LOCATION	HEIGHT (FT)	465-2005 MANH (COMPL) (TY M) EA	465-2115 INLET (COMPL) (TY I) (MOD) EA	465-2221 INLET EXT (TY I) EA	465-2322 INLET TYPE C (3-GRATE) EA	465-2507 INLET (COMPL) (DROP) (TY C) (1-GRATE) EA
GN1	CI-GN1A-I	SH 289 STA. 242+09.57, 47.00' LT	4.5		1.0	1.0		
	CI-GN1-I	SH 289 STA. 240+85.00, 47.00' LT	4.5		1.0	1.0		
	CI-GN2-I	SH 289 STA. 239+69.32, 47.00' LT	5.0		1.0	1.0		
	CI-GN3-I	SH 289 STA. 238+50.00, 47.00' LT	4.0		1.0	1.0		
	CI-GN4-I	SH 289 STA. 237+30.00, 47.00' LT	4.0		1.0	2.0		
	CI-GN5-5	SH 289 STA. 236+10.00, 47.00' LT	4.5		1.0	2.0		
	CI-GN6-I	SH 289 STA. 234+90.00, 47.00' LT	5.5		1.0	2.0		
	CI-GN7-I	SH 289 STA. 233+65.00, 47.00' LT	5.5		1.0	3.0		
	CI-GN8-I	SH 289 STA. 232+47.00, 47.00' LT	6.5		1.0	3.0		
	CI-GN9-I	SH 289 STA. 231+25.00, 47.00' LT	8.0		1.0	3.0		
	CI-GN10-I	SH 289 STA. 230+10.00, 47.00' LT	7.5		1.0	3.0		
	CI-GN11-I	SH 289 STA. 228+50.00, 47.00' LT	8.0		1.0	3.0		
	CI-GN12-I	SH 289 STA. 227+40.00, 47.00' LT	8.0		1.0	3.0		
	CI-GN13-I	SH 289 STA. 226+00.00, 47.00' LT	10.5		1.0	3.0		
	CI-GN27A	SH 289 STA. 223+85.00, 47.00' LT	10.5		1.0	1.0		
GN2	CI-GN14A-I	SH 289 STA. 242+00.00, 47.00' RT	4.5		1.0	1.0		
	CI-GN14-I	SH 289 STA. 241+10.00, 47.00' RT	5.5		1.0	1.0		
	CI-GN15-I	SH 289 STA. 239+60.00, 47.00' RT	4.0		1.0	1.0		
	CI-GN16-I	SH 289 STA. 238+40.00, 47.00' RT	4.0		1.0	1.0		
	CI-GN17-I	SH 289 STA. 237+20.00, 47.00' RT	4.5		1.0	1.0		
	CI-GN18-I	SH 289 STA. 236+00.00, 47.00' RT	4.0		1.0	1.0		
	CI-GN19-I	SH 289 STA. 234+80.00, 47.00' RT	4.5		1.0	1.0		
	CI-GN20-I	SH 289 STA. 233+60.00, 47.00' RT	4.5		1.0	1.0		
	CI-GN21-I	SH 289 STA. 232+40.00, 47.00' RT	4.5		1.0	1.0		
	CI-GN22-I	SH 289 STA. 231+20.00, 47.00' RT	6.0		1.0	1.0		
	CI-GN23-I	SH 289 STA. 230+00.00, 47.00' RT	5.0		1.0	1.0		
	CI-GN24-I	SH 289 STA. 229+06.80, 47.00' RT	5.5		1.0	1.0		
	CI-GN25-I	SH 289 STA. 227+40.00, 47.00' RT	5.5		1.0	1.0		
	CI-GN26-I	SH 289 STA. 226+00.00, 47.00' RT	5.5		1.0	1.0		
	CI-GN27	SH 289 STA. 223+85.00, 47.00' RT	10.0		1.0	1.0		
GS1	CI-GS29-I	SH 289 STA. 209+00.00, 47.00' LT	6.0		1.0	1.0		
	CI-GS30-I	SH 289 STA. 210+50.00, 47.00' LT	6.0		1.0	1.0		
	CI-GS31-I	SH 289 STA. 212+00.00, 47.00' LT	5.0		1.0	1.0		
	CI-GS32-I	SH 289 STA. 213+50.00, 47.00' LT	4.5		1.0	1.0		
SHEET TOTALS:				**3.0**	**118.0**	**178.0**	**7.0**	**1.0**

Inlet&StormSewer*SUMMARY.dgn

STATE OF TEXAS
HASSAN SAM MOGHADASSI
84231
LICENSED
PROFESSIONAL ENGINEER

H. Moghadassi , P.E. 7/12/11
Signature of Registrant & Date

Texas Department of Transportation
© 2011

SH 289
FM 455 TO N BUS 289C
INLET & MANHOLE SUMMARY TABLE

Sheet 9 of 17

DESIGN	FED.RD. DIV.NO.	STATE PROJECT NO.		HIGHWAY NO.
SHM	6	SEE TITLE SHEET		SH 289
GRAPHICS OE	STATE	DISTRICT	COUNTY	SHEET NO.
CHECK SM	TEXAS	DALLAS	COLLIN	26
CHECK	CONTROL	SECTION	JOB	
	0091	03		

P-201107-01

...\Inlet&StormSewer*SUMMARY.dgn

7/11/2011
t:\dal\dgn*s\sh289\design\sheets\DRNG\Inlet&StormSewer*SUMMARY.dgn

TXDOT
1.0000 ft / IN.

SUMMARY OF INLET

LINE	INLET OR MANHOLE NO.	LOCATION	HEIGHT (FT)	465-2005 MANH (COMPL) (TY M) EA	465-2115 INLET (COMPL) (TY I) (MOD) EA	465-2221 INLET EXT (TY I) EA	465-2322 INLET TYPE C (3-GRATE) EA	465-2507 INLET (COMPL) (DROP) (TY C) (1-GRATE) EA
		TOTAL FROM PREVIOUS SHEET:		**3.0**	**118.0**	**178.0**	**4.0**	**1.0**
GS1	CI-GS33-I	SH 289 STA. 215+00.00, 47.00' LT	5.0		1.0	1.0		
	CI-GS34-I	SH 289 STA. 216+50.00, 47.00' LT	6.0		1.0	1.0		
	CI-GS35-I	SH 289 STA. 218+00.00, 47.00' LT	5.0		1.0	1.0		
	CI-GS36-I	SH 289 STA. 219+50.00, 47.00' LT	6.0		1.0	1.0		
	GS-DI1	SH 289 STA. 220+00.00, 73.00' LT	4.0				1.0	
	CI-GS37-I	SH 289 STA. 221+00.00, 47.00' LT	6.5		1.0	1.0		
	CI-GS38-I	SH 289 STA. 222+35.00, 47.00' LT	9.5		1.0	1.0		
GS2	CI-GS39-I	SH 289 STA. 209+00.00, 47.00' RT	5.0		1.0	1.0		
	CI-GS40-I	SH 289 STA. 210+50.00, 47.00' RT	6.0		1.0	1.0		
	CI-GS41-I	SH 289 STA. 212+00.00, 47.00' RT	5.0		1.0	1.0		
	CI-GS42-I	SH 289 STA. 213+50.00, 47.00' RT	5.0		1.0	1.0		
	CI-GS43-I	SH 289 STA. 215+00.00, 47.00' RT	4.5		1.0	1.0		
	GS-DI2	SH 289 STA. 216+00.00, 63.00' RT	5.0					1.0
	CI-GS44-I	SH 289 STA. 216+50.00, 47.00' RT	5.0		1.0	1.0		
	CI-GS45-I	SH 289 STA. 218+00.00, 47.00' RT	5.0		1.0	1.0		
	CI-GS46-I	SH 289 STA. 219+50.00, 47.00' RT	6.0		1.0	1.0		
	CI-GS47-I	SH 289 STA. 221+00.00, 47.00' RT	6.0		1.0	1.0		
	CI-GS48-I	SH 289 STA. 222+35.00, 47.00' RT	8.0		1.0	1.0		
H 1 & H3	CI-H1	SH 289 STA. 243+57.00, 47.00' LT	6.0		1.0	1.0		
	CI-H3	SH 289 STA. 245+14.00, 47.00' LT	4.5		1.0	1.0		
H 2 & H4	CI-H2	SH 289 STA. 243+89.83, 47.00' RT	10.0		1.0	1.0		
	CI-H4	SH 289 STA. 245+06.00, 47.00' RT	10.5		1.0	1.0		
I 1	CI-I 2B	SH 289 STA. 246+40.00, 47.00' RT	10.5		1.0	1.0		
	CI-I 2A	SH 289 STA. 248+24.00, 47.00' RT	4.5		1.0	1.0		
	CI-I 2	SH 289 STA. 249+64.00, 47.00' RT	5.0		1.0	1.0		
	CI-I 4	SH 289 STA. 251+76.00, 47.00' RT	5.5		1.0	1.0		
	CI-I 6	SH 289 STA. 253+76.00, 47.00' RT	5.5		1.0	1.0		
	CI-I 8	SH 289 STA. 256+34.00, 47.00' RT	4.5		1.0	1.0		
	CI-I 10	SH 289 STA. 258+60.00, 47.00' RT	4.0		1.0	1.0		
I 2	CI-I 1B	SH 289 STA. 246+54.00, 47.00' LT	8.5		1.0	1.0		

SUMMARY OF INLET

LINE	INLET OR MANHOLE NO.	LOCATION	HEIGHT (FT)	465-2005 MANH (COMPL) (TY M) EA	465-2115 INLET (COMPL) (TY I) (MOD) EA	465-2221 INLET EXT (TY I) EA	465-2322 INLET TYPE C (3-GRATE) EA	465-2507 INLET (COMPL) (DROP) (TY C) (1-GRATE) EA
	CI-I 1A	SH 289 STA. 248+27.00, 47.00' LT	5.0		1.0	1.0		
	CI-I 1	SH 289 STA. 249+64.00, 47.00' LT	4.5		1.0	1.0		
	CI-I 3	SH 289 STA. 251+76.00, 47.00' LT	4.5		1.0	1.0		
	CI-I 5	SH 289 STA. 253+76.00, 47.00' LT	4.5		1.0	1.0		
	CI-I 7	SH 289 STA. 256+33.00, 47.00' LT	4.5		1.0	1.0		
	CI-I 9	SH 289 STA. 258+70.00, 47.00' LT	4.5		1.0	1.0		
J 1	CI-J1	SH 289 STA. 261+00.00, 47.00' LT	4.5		1.0	1.0		
	CI-J3	SH 289 STA. 262+36.00, 47.00' LT	4.5		1.0	1.0		
	CI-J5	SH 289 STA. 263+81.00, 47.00' LT	4.5		1.0	1.0		
	CI-J7	SH 289 STA. 265+46.00, 47.00' LT	4.5		1.0	1.0		
	CI-J9	SH 289 STA. 267+32.00, 48.82' LT	5.0		1.0	1.0		
	CI-J11	SH 289 STA. 268+89.00, 47.35' LT	5.0		1.0	1.0		
	CI-J13	SH 289 STA. 270+10.00, 48.76' LT	5.0		1.0	1.0		
	CI-J15	SH 289 STA. 271+79.00, 48.38' LT	5.0		1.0	1.0		
	CI-J17	SH 289 STA. 272+72.00, 47.00' LT	5.0		1.0	1.0		
	CI-J19	SH 289 STA. 274+10.00, 47.00' LT	5.0		1.0	1.0		
	CI-J21	SH 289 STA. 275+38.00, 47.00' LT	5.0		1.0	1.0		
	CI-J23	SH 289 STA. 267+36.00, 47.00' LT	5.0		1.0	1.0		
	CI-J25	SH 289 STA. 277+56.00, 47.00' LT	5.0		1.0	1.0		
	CI-J27	SH 289 STA. 279+20.50, 48.60' LT	5.0		1.0	2.0		
	CI-J29	SH 289 STA. 281+20.00, 47.21' LT	5.0		1.0	3.0		
	CI-J31	SH 289 STA. 282+90.00, 47.00' LT	5.5		1.0	3.0		
	CI-J33	SH 289 STA. 284+82.00, 47.00' LT	6.5		1.0	3.0		
	CI-J35	SH 289 STA. 286+34.00, 48.56' LT	8.0		1.0	2.0		
	CI-J37	SH 289 STA. 288+36.00, 48.00' LT	7.5		1.0	3.0		
	CI-J39	SH 289 STA. 289+83.00, 47.00' LT	7.5		1.0	3.0		
	CI-J41	SH 289 STA. 291+10.00, 47.00' LT	7.5		1.0	2.0		
	CI-J43	SH 289 STA. 292+22.00, 47.00' LT	7.5		1.0	2.0		
	CI-J45	SH 289 STA. 293+57.00, 47.00' LT	8.0		1.0	2.0		
	CI-J47	SH 289 STA. 295+73.00, 47.00' LT	7.5		1.0	3.0		
	CI-J49	SH 289 STA. 297+51.00, 47.00' LT	8.0		1.0	3.0		
	CI-J51	SH 289 STA. 298+96.00, 47.00' LT	7.5		1.0	3.0		
	CI-J53	SH 289 STA. 300+00.00, 47.00' LT	8.0		1.0	2.0		
	CI-J55	SH 289 STA. 301+32.00, 47.00' LT	8.0		1.0	2.0		
	CI-J57	SH 289 STA. 302+42.00, 47.00' LT	7.5		1.0	2.0		
SHEET TOTALS:				**3.0**	**181.0**	**265.0**	**8.0**	**2.0**

Inlet&StormSewer*SUMMARY.dgn

STATE OF TEXAS
HASSAN SAM MOGHADASSI
84231
LICENSED
PROFESSIONAL ENGINEER

H. Moghadassi, P.E. 7/12/11
Signature of Registrant & Date

Texas Department of Transportation
© 2011

SH 289
FM 455 TO N BUS 289C
INLET & MANHOLE SUMMARY TABLE

Sheet 10 of 17

DESIGN	FED.RD. DIV.NO.	STATE PROJECT NO.		HIGHWAY NO.
SHM	6	SEE TITLE SHEET		SH 289
GRAPHICS OE	STATE	DISTRICT	COUNTY	SHEET NO.
CHECK SM	TEXAS	DALLAS	COLLIN	27
CHECK	CONTROL	SECTION	JOB	
	0091	03	201107-01	

P-201107-01

...\Inlet&StormSewer*SUMMARY.dgn

7/11/2011
t:\dal\dgn*s\sh289\design\sheets\DRNG\Inlet&StormSewer*SUMMARY.dgn

TXDOT
1.0000 ft / IN.

SUMMARY OF INLET

LINE	INLET OR MANHOLE NO.	LOCATION	HEIGHT (FT)	465-2005 MANH (COMPL) (TY M) EA	465-2115 INLET (COMPL) (TY I) (MOD) EA	465-2221 INLET EXT (TY I) EA	465-2322 INLET TYPE C (3-GRATE) EA	465-2507 INLET (COMPL) (DROP) (TY C) (1-GRATE) EA
		TOTAL FROM PREVIOUS SHEET:		**3.0**	**181.0**	**265.0**	**8.0**	**2.0**
J 2	CI-J2	SH 289 STA. 261+10.00, 47.63' RT	4.5		1.0	1.0		
	CI-J4	SH 289 STA. 262+42.00, 47.00' RT	4.5		1.0	1.0		
	CI-J6	SH 289 STA. 263+59.00, 47.00' RT	4.5		1.0	1.0		
	CI-J8	SH 289 STA. 265+83.00, 47.00' RT	4.5		1.0	1.0		
	CI-J10	SH 289 STA. 267+27.00, 47.00' RT	4.5		1.0	1.0		
	CI-J14	SH 289 STA. 270+00.00, 47.00' RT	5.0		1.0	1.0		
	CI-J18	SH 289 STA. 272+31.00, 47.00' RT	5.0		1.0	1.0		
	CI-J20	SH 289 STA. 274+10.00, 47.00' RT	5.0		1.0	1.0		
	CI-J22	SH 289 STA. 275+43.00, 47.00' RT	5.0		1.0	1.0		
	CI-J24	SH 289 STA. 276+44.00, 47.00' RT	5.0		1.0	1.0		
	CI-J26	SH 289 STA. 277+69.00, 47.00' RT	5.0		1.0	1.0		
	CI-J28	SH 289 STA. 279+27.00, 47.00' RT	5.0		1.0	1.0		
	CI-J30	SH 289 STA. 280+98.00, 47.00' RT	5.0		1.0	1.0		
	CI-J32	SH 289 STA. 283+00.00, 47.00' RT	5.0		1.0	1.0		
	CI-J34	SH 289 STA. 284+93.00, 47.00' RT	6.0		1.0	2.0		
	CI-J36	SH 289 STA. 287+14.00, 47.00' RT	6.0		1.0	2.0		
	CI-J38	SH 289 STA. 289+17.00, 47.00' RT	6.5		1.0	2.0		
	CI-J40	SH 289 STA. 291+29.00, 47.00' RT	6.5		1.0	2.0		
	CI-J44	SH 289 STA. 293+75.00, 47.00' RT	5.5		1.0	2.0		
	CI-J46	SH 289 STA. 295+94.00, 47.00' RT	5.0		1.0	2.0		
	CI-J48	SH 289 STA. 297+69.00, 47.00' RT	5.0		1.0	1.0		
	CI-J50	SH 289 STA. 299+14.00, 47.00' RT	5.0		1.0	1.0		
	CI-J52	SH 289 STA. 300+19.00, 47.00' RT	5.5		1.0	1.0		
	CI-J54	SH 289 STA. 301+42.00, 58.42' RT	5.0		1.0	1.0		
	CI-J56	SH 289 STA. 302+52.00, 59.00' RT	5.0		1.0	1.0		
		GRAND TOTALS:		**3.0**	**206.0**	**296.0**	**8.0**	**2.0**

STATE OF TEXAS
HASSAN SAM MOGHADASSI
84231
LICENSED
PROFESSIONAL ENGINEER

H.S.Moghadassi, P.E. 7/12/11
Signature of Registrant & Date

Inlet&StormSewer*SUMMARY.dgn

Texas Department of Transportation
© 2011

SH 289
FM 455 TO N BUS 289C
INLET & MANHOLE SUMMARY TABLE

Sheet 11 of 17

DESIGN	FED.RD. DIV.NO.	STATE PROJECT NO.		HIGHWAY NO.
SHM	6	SEE TITLE SHEET		SH 289
GRAPHICS OE	STATE	DISTRICT	COUNTY	SHEET NO.
CHECK SM	TEXAS	DALLAS	COLLIN	28
CHECK	CONTROL	SECTION	JOB	
	0091	03	P-201107-01	

...\Inlet&StormSewer*SUMMARY.dgn

7/11/2011
I:\dal\dgn*s\sh289\design\sheets\DRNG\Inlet&StormSewer*SUMMARY.dgn

ITEM NO.			(464)								400		(402)
LINE	LOCATION		2003	2021	2005	2006	2007	2009	2010	2011	2003	2005	2001
			18"		24"	27"	30"	36"	42"	48"			
	FROM	TO	CL III (LF)	CL IV (LF)	CL III (LF)	CL III (LF)	CL III (LF)	CL III (LF)	CL III (LF)	CL III (LF)	*STRUCT EXCAV. (CY)	CEM STABIL BKFL (CY)	TRENCH EXCAVATION PROTECTION (LF)
A1	CI-A1-I	JCT-1			111.50						108.07		113.44
	STUB 1	JCT-1			41.00								0.00
	JCT1	CI-A2-I			43.50								46.56
	CI-A2-I	CI-A3-I					135.00				108.05		140.00
	CI-A3-I	CI-A4-I					125.00						130.00
	CI-A4-I	JCT-2							40.50		46.37		41.83
	STUB 2	JCT-2				76.00					48.26		0.00
	JCT-2	CI-A5-I							77.50		396.98		81.17
	CI-A5-I	CI-A6-I							112.00				117.00
	CI-A6-I	CI-A7-I							115.0				120.00
	CI-A7-I	JCT-3							42.50				44.00
	STUB 3	JCT-3					55.00				40.15		0.00
	JCT-3	CI-A8-I							52.50		277.00		56.00
	CI-A8-I	CI-A9-I							95.00				100.00
	CI-A9-I	CI-A18							95.00				94.00
A2	CI-A10	CI-A11	173.00								387.62		178.00
	CI-A11	CI-A12	135.00										0.00
	CI-A12	CI-A13	70.00										0.00
	CI-A13	CI-A14	230.00										0.00
	CI-A14	CI-A15	119.00										0.00
	CI-A15	CI-A16	109.00										0.00
	CI-A16	CI-A17	87.50										0.00
	CI-A17	CI-A18	45.00										0.00
	CI-A18	MH-A19								282.00	1008.48		285.00
	MH-A19	OUTFALL A2								300.50			309.00
BN1 & BS1	CI-B1-I	OUTFALL BS 1	160.50								98.83		55.00
	CI-B2-I	OUTFALL BN 1	87.00										57.00
BN3 & BS3	CI-BN3-I	JUNCT BOX					4.0						
	CI-BS3-I	JUNCT BOX					4.0						
BN2 & BS2	CI-B3-I	OUTFALL BS 2	160.50								98.52		
	CI-B2-I	OUTFALL BN 2	86.00										
CN1	CI-C1-I	CI-C2-I	104.00								202.72		
	CI-C2-I	CI-C3-I	130.00										
	CI-C3-I	CI-C4-I	123.50										
	CI-C4-I	CI-C5-I	149.50										
	GI-C5-E	CI-C5-I						14.50			185.51		18.00
	CI-C5-I	CI-C6-E							186.00				103.00
	STUB 1	CI-C6-E	5.00								2.00		7.00
	CI-C6-E	CI-C7-I							116.00		106.83		120.86
	STUB 2	CI-C7-I	4.50								1.8		7.00
	CI-C7-I	CI-C8-I							166.00		189.49		170.64
	CI-C8-I	CI-C9-I								297.00	568.97		227.50
	CI-C9-I	OUTFALL CN1								21.00			
SHEET 1 TOTALS:			1979.00		196.00	76.00	323.00	14.50	1098.00	900.5			2622.00

\# FOR CONTRACTORS INFORMATION ONLY

Inlet&StormSewer*SUMMARY.dgn

Texas Department of Transportation
© 2011

SH 289
FM 455 TO N BUS 289C
STORM SEWER SUMMARY TABLE

Sheet 12 of 17

DESIGN	FED. RD. DIV. NO.	STATE PROJECT NO.		HIGHWAY NO.
SHM	6	SEE TITLE SHEET		SH 289
GRAPHICS	STATE	DISTRICT	COUNTY	SHEET NO.
OE	TEXAS	DALLAS	COLLIN	29
CHECK	CONTROL	SECTION	JOB	
SM	0091	03	P-201107-01	
CHECK				

...\Inlet&StormSewer*SUMMARY.dgn

TXDOT
1.0000 ft / IN.

7/11/2011
t:\dal\dgn*s\sh289\design\sheets\DRNG\Inlet&StormSewer*SUMMARY.dgn

ITEM NO.			(464)								400		(402)
LINE	LOCATION		2003	2021	2005	2006	2007	2009	2010	2011	2003	2005	2001
			18"		24"	27"	30"	36"	42"	48"			
	FROM	TO	CL III (LF)	CL IV (LF)	CL III (LF)	CL III (LF)	CL III (LF)	CL III (LF)	CL III (LF)	CL III (LF)	*STRUCT EXCAV. (CY)	CEM STABIL BKFL (CY)	TRENCH EXCAVATION PROTECTION (LF)
	TOTAL FROM PREVIOUS SHEET:		1979.00		196.00	76.00	323.00	14.50	1098.00	900.50			2622.00
CN2	CI-C12	CI-C13	130.00										
	CI-C13	CI-C14	119.00										
	CI-C14	CI-C15	143.00										
	CI-C15	CI-C16	88.00										
	GI-C16	CI-C17	205.00								530.57		
	CI-C17	CI-C18	245.00										
	CI-C18	CI-C19	245.00										
	CI-C19	CI-C20	130.50										
	CI-C20	OUTFALL CN2	21.00										
CS1	CONC HEADWALL	CI-C11-I						8.50			200.36		
	CI-C11-I	CI-C10-I						209.0					
	CI-C10-I	JCT-1							177.00		202.65		
	GI-C10a-E	JCT-1			18.50						10.16		19.00
	JCT-1	MH-CS9								92.00	342.91		
	MH-CS9	OUTFALL CS1								100.00			87.00
CS2	CI-C22	CI-C21	209.00								192.02		
	CI-C21	OUTFALL CS2	284.50										
DN1	GI-DNI1	JT DN2A			16.00								
	CI-DN2	CI-DN4			145.00								
	CI-DN4	CI-DN6			145.00						158.64		
	CI-DN6	CI-DN8			96.00								
	CI-DN8	OUTFALL DN1			10.50								
DN2	CI-DN1	CI-DN3	144.00										
	CI-DN3	CI-DN5	146.00								133.00		
	CI-DN5	OUTFALL DN2	42.50										
DS1	CI-DS7	CI-DS5	182.00								149.81		
	CI-DS5	CI-DS3	192.50										
	CI-DS3	MH-DS			228.50								
	MH-DS	CI-DS1			210.00						261.39		
	CI-DS1	OUTFALL DS1			36.00								
DS2	CI-DS6	CI-DS4	184.50										
	CI-DS4	CI-DS2	202.00								193.02		
	CI-DS2	CI-DS3	96.00										52.00
E1	CI-E1	JCT-1			90.00								91.67
	STUB-1	JCT-1			53.00								53.00
	JCT-1	CI-E2			105.00								108.33
	CI-E2	CI-E3			145.00						456.16		150.00
	CI-E3	CI-E4			145.00								153.00
	CI-E4	CI-E5			145.00								0.00
	CI-E5	CI-E6			145.00								150.00
SHEET 1 TOTALS:			4680.50		1929.50	76.00	315.00	232.00	1275.00	1092.50			3486.00

*** FOR CONTRACTORS INFORMATION ONLY**

Inlet&StormSewer*SUMMARY.dgn

Texas Department of Transportation
© 2011

SH 289
FM 455 TO N BUS 289C
STORM SEWER SUMMARY TABLE

Sheet 13 of 17

DESIGN	FED.RD. DIV.NO.	STATE PROJECT NO.		HIGHWAY NO.
SHM	6	SEE TITLE SHEET		SH 289
GRAPHICS OE	STATE	DISTRICT	COUNTY	SHEET NO.
CHECK SM	TEXAS	DALLAS	COLLIN	30
CHECK	CONTROL	SECTION	JOB	
	0091	03	220	

P-201107-01

...\Inlet&StormSewer*SUMMARY.dgn

TXDOT 1.0000 ft / IN.

7/11/2011 t:\dal\dgn\s\sh289\design\sheets\DRNG\Inlet&StormSewer*SUMMARY.dgn

TXDOT
1.0000 ft / IN.

ITEM NO.		(464)								400		(402)
LINE	LOCATION	2003	2021	2005	2006	2007	2009	2010	2011	2003	2005	2001
		18"		24"	27"	30"	36"	42"	48"			
	FROM TO	CL III (LF)	CL IV (LF)	CL III (LF)	CL III (LF)	CL III (LF)	CL III (LF)	CL III (LF)	CL III (LF)	* STRUCT EXCAV. (CY)	CEM STABIL BKFL (CY)	TRENCH EXCAVATION PROTECTION (LF)
	TOTAL FROM PREVIOUS SHEET:	4680.50		1929.5	76.00	323.00	232.00	1275.00	1092.50			3486.00
	CI-E6 CI-E7			145.00						79.90		150.00
	CI-E7 CI-E8						145.00			133.84		150.00
	CI-E8 JCT-2							103.50		118.54		103.88
	GI-E9GI JCT-2			23.00						12.58		23.00
	JCT-2 CI-E10							41.50		47.40		46.12
	CI-E10 CI-E11								145.00	397.78		150.00
	CI-E11 OUTFALL E1								77.50			96.00
E2	CI-E12 CI-E13	195.00										41.00
	CI-E13 CI-E14	145.00										150.00
	CI-E14 CI-E15	145.00								368.00		0.00
	CI-E15 CI-E16	145.00										0.00
	CI-E16 CI-E17	145.00										0.00
	CI-E17 CI-E18	145.00										0.00
	CI-E18 CI-E19			145.00								18.00
	CI-E19 CI-E20			145.00						239.69		150.00
	CI-E20 CI-E21			145.00								150.00
	CI-E21 OUTFALL E2					76.00				55.02		77.00
F1	GI-FGINLT 45° BEND			31.50								
	45° BEND CI-F1			56.00								
	CI-F1 CI-F2			117.00						225.32		
	CI-F2 CI-F3			110.00								
	CI-F3 CI-F6			94.50								59.00
F2	CI-F4 CI-F5	117.00								90.80		
	CI-F5 CI-F6	110.00										
	CI-F6 OUTFALL F2			60.00						33.23		
GN1	CI-GN1A-I CI-GN1-I	119.50										53.60
	CI-GN1-I CI-GN2-I	111.00										115.68
	CI-GN2-I CI-GN3-I	114.00								275.82		119.32
	CI-GN3-I CI-GN4-I	115.00										122.40
	CI-GN4-I CI-GN5-I	115.00										0.00
	CI-GN5-I CI-GN6-I	115.00										0.00
	CI-GN6-I JCT-1			65.00								0.00
	STUB-1 JCT-1			60.00								60.00
	JCT-1 CI-GN7-I			55.00								0.00
	CI-GN7-I CI-GN8-I			113.00								122.00
	CI-GN8-I JCT-2			63.00						402.18		65.00
	STUB-2 JCT-2			55.50								55.00
	JCT-2 CI-GN9-I			54.00								57.00
	CI-GN9-I CI-GN10-I			110.00								115.00
	CI-GN10-I CI-GN11-I			155.00								160.00
	CI-GN11-I CI-GN12-I					105.00				76.13		110.00
	CI-GN12-I CI-GN13-I						135.00			124.61		140.00
	SHEET 1 TOTALS:	6517.00		3732.00	76.00	504	512.00	1420.00	1315.00			6145.00

*** FOR CONTRACTORS INFORMATION ONLY**

Inlet&StormSewer*SUMMARY.dgn

Texas Department of Transportation
© 2011

SH 289
FM 455 TO N BUS 289C
STORM SEWER SUMMARY TABLE

Sheet 14 of 17

DESIGN	FED.RD. DIV.NO.	STATE PROJECT NO.		HIGHWAY NO.
SHM	6	SEE TITLE SHEET		SH 289
GRAPHICS OE	STATE	DISTRICT	COUNTY	SHEET NO.
CHECK SM	TEXAS	DALLAS	COLLIN	31
CHECK	CONTROL	SECTION	JOB	
	0091	03	P-201107-01	

...\Inlet&StormSewer*SUMMARY.dgn

7/11/2011
t:\dal\dgn*s\sh289\design\sheets\DRNG\Inlet&StormSewer*SUMMARY.dgn

TXDOT
1.0000 ft / IN.

ITEM NO.			(464)								400		(402)
LINE	LOCATION		2003	2021	2005	2006	2007	2009	2010	2011	2003	2005	2001
			18"		24"	27"	30"	36"	42"	48"			
	FROM	TO	CL III (LF)	CL IV (LF)	CL III (LF)	CL III (LF)	CL III (LF)	CL III (LF)	CL III (LF)	CL III (LF)	*STRUCT EXCAV. (CY)	CEM STABIL BKFL (CY)	TRENCH EXCAVATION PROTECTION (LF)
	TOTAL FROM PREVIOUS SHEET:		6517.00		3732.00	76.00	504.00	512.00	1420.00	1315.00			6145.00
	CI-GN13-I	CI-GN27A						210.00			271.19		215.00
	CI-GN27A	OUTFALL GN1						84.00					99.00
GN2	CI-GN14A-I	CI-GN14-I	85.00										0.00
	CI-GN14-I	CI-GN15-I	145.00										153.00
	CI-GN15-I	CI-GN16-I	115.00										120.00
	CI-GN16-I	CI-GN17-I	115.00										77.00
	CI-GN17-I	CI-GN18-I	115.00										0.00
	CI-GN18-I	CI-GN19-I	115.00								495.28		0.00
	CI-GN19-I	CI-GN20-I	115.00										7.00
	CI-GN20-I	CI-GN21-I	115.00										120.00
	CI-GN21-I	CI-GN22-I	115.00										120.00
	CI-GN22-I	CI-GN23-I	115.00										120.00
	CI-GN23-I	CI-GN24-I	88.00										93.00
	CI-GN24-I	CI-GN25-I			162.00								66.00
	CI-GN25-I	CI-GN26-I			135.00						279.25		0.00
	CI-GN26-I	CI-GN27			210.00								0.00
	CI-GN27	OUTFALL GN2						84.50			78.23		90.00
GS1	CI-GS29-I	CI-GS30-I					145.00						
	CI-GS30-I	CI-GS31-I					145.00						
	CI-GS31-I	CI-GS32-I					145.00						
	CI-GS32-I	CI-GS33-I					145.00				464.00		
	CI-GS33-I	CI-GS34-I					145.00						82.00
	CI-GS34-I	CI-GS35-I					145.00						121.00
	CI-GS35-I	CI-GS36-I					145.00						52.50
	CI-GS36-I	CI-GS37-I					145.00						150.00
	CI-GS37-I	CI-GS38-I					130.00				71.63		135.00
	CI-GS38-I	OUTFALL GS1						33.50			24.25		36.50
	GS-DI1	JCT-1					23.50						
GS2	CI-GS39-I	CI-GS40-I	145.00										
	CI-GS40-I	CI-GS41-I	145.00										
	CI-GS41-I	CI-GS42-I	145.00								348.00		
	CI-GS42-I	CI-GS43-I	145.00										
	CI-GS43-I	CI-GS44-I	145.00										
	CI-GS44-I	CI-GS45-I	145.00										
	CI-GS45-I	CI-GS46-I			145.00								9.00
	CI-GS46-I	CI-GS47-I			145.00						231.40		150.00
	CI-GS47-I	CI-GS48-I			130.00								135.00
	CI-GS48-I	OUTFALL GS2			35.00						25.21		37.00
H 1 & H3	CI-H1	OUTFALL H1	26.00								53.25		
	CI-H3	OUTFALL H3	101.50										
H 2 & H4	CI-H2	OUTFALL H2	9.00								10.08	11.71	10.00
	CI-H4	OUTFALL H4	14.00									18.53	15.00
SHEET 1 TOTALS:			8776.00		4694.00	76.00	1817.50	924.00	1420.00	1315.00		30.24	8358.00

* FOR CONTRACTORS INFORMATION ONLY

Inlet&StormSewer*SUMMARY.dgn

Texas Department of Transportation
© 2011

SH 289
FM 455 TO N BUS 289C
STORM SEWER SUMMARY TABLE

Sheet 15 of 17

DESIGN	FED.RD. DIV.NO.	STATE PROJECT NO.		HIGHWAY NO.
SHM	6	SEE TITLE SHEET		SH 289
GRAPHICS OE	STATE	DISTRICT	COUNTY	SHEET NO.
CHECK SM	TEXAS	DALLAS	COLLIN	32
CHECK	CONTROL	SECTION	JOB	
	0091	03	201107-01	

P-201107-01

7/11/2011
t:\dal\dgn*s\sh289\design\sheets\DRNG\Inlet&StormSewer*SUMMARY.dgn
...\Inlet&StormSewer*SUMMARY.dgn

TXDOT
1.0000 ft / IN.

ITEM NO.			(464)								400		(402)
LINE	LOCATION		2003	2021	2005	2006	2007	2009	2010	2011	2003	2005	2001
			18"		24"	27"	30"	36"	42"	48"			
	FROM	TO	CL III (LF)	CL IV (LF)	CL III (LF)	CL III (LF)	CL III (LF)	CL III (LF)	CL III (LF)	CL III (LF)	* STRUCT EXCAV. (CY)	CEM STABIL BKFL (CY)	TRENCH EXCAVATION PROTECTION (LF)
	TOTAL FROM PREVIOUS SHEET:		8776.00		4694.00	76.00	1817.50	924.00	1420.00	1315.00		30.24	8358.00
I 1	CI-I 10	CI-I 8	221.00										
	CI-I 8	CI-I 6	253.00										
	CI-I 6	CI-I 4	195.00										
	CI-I 4	CI-I 2	207.00								518.00		
	CI-I 2	CI-I 2A	135.00										
	CI-I 2A	CI-I 2B	179.00										
	CI-I 2B	OUTFALL I 1	114.00										119.00
I 2	CI-I 9	CI-I 7	232.00										
	CI-I 7	CI-I 5	252.00										48.00
	CI-I 5	CI-I 3	195.00								407.20		
	CI-I 3	CI-I 1	207.00										
	CI-I 1	CI-I 1A	132.00										
	CI-I 1A	CI-I 1B			168.00						104.44	49.00	
	CI-I 1B	OUTFALL I 2			37.00								
J 1	CI-J1	CI-J3	128.00										135.50
	CI-J3	CI-J5	140.00										145.00
	CI-J5	CI-J7	160.00								243.55		119.50
	CI-J7	CI-J9	181.00										0.00
	CI-J9	CI-J11			153.50								0.00
	CI-J11	CI-J13			116.00								0.00
	CI-J13	CI-J15			167.00								169.00
	CI-J15	CI-J17			89.00								93.00
	CI-J17	CI-J19			132.00								138.00
	CI-J19	CI-J21			126.00								128.00
	CI-J21	CI-J23			94.00						017.98		98.00
	CI-J23	CI-J25			116.00								120.00
	CI-J25	CI-J27			161.00								164.50
	CI-J27	CI-J29			195.00								199.50
	CI-J29	CI-J31			165.00								170.00
	CI-J31	CI-J33			187.00								192.00
	CI-J33	CI-J35			147.00								152.00
	CI-J35	CI-J37					197.00						202.00
	CI-J37	CI-J39					142.00						147.00
	CI-J39	CI-J41					121.00				506.14		127.00
	CI-J41	CI-J43					108.00						112.00
	CI-J43	CI-J45					130.00						135.00
	CI-J45	JCT-1						105.00			96.88		107.50
	STUB 1	JCT-1			11.00						6.13		11.00
	JCT-1	CI-J47						106.00			257.52		108.50
	CI-J47	CI-J49						173.00					178.00
	CI-J49	JCT-2							60.00		68.64		62.50
	STUB 2	JCT-2	16.00								6.40		16.00
	JCT-2	CI-J51							80.00				82.50
	CI-J51	CI-J53							99.00		305.98		104.00
	CI-J53	CI-J55							127.00				132.00
	SHEET 1 TOTALS:		11723.00		6758.50	76.00	2515.50	1308.00	1786.00	1315.00		79.24	12074.00

* FOR CONTRACTORS INFORMATION ONLY

Inlet&StormSewer*SUMMARY.dgn

Texas Department of Transportation
© 2011

SH 289
FM 455 TO N BUS 289C
STORM SEWER SUMMARY TABLE

Sheet 16 of 17

DESIGN	FED.RD. DIV.NO.	STATE PROJECT NO.		HIGHWAY NO.
SHM	6	SEE TITLE SHEET		SH 289
GRAPHICS OE	STATE	DISTRICT	COUNTY	SHEET NO.
CHECK SM	TEXAS	DALLAS	COLLIN	33
CHECK	CONTROL	SECTION	JOB	
	0091	03	22	

P-201107-01

...\Inlet&StormSewer*SUMMARY.dgn

7/11/2011
t:\dal\dgn*s\sh289\design\sheets\DRNG\Inlet&StormSewer*SUMMARY.dgn

ITEM NO.		(464)								400		(402)
LINE	LOCATION	2003	2021	2005	2006	2007	2009	2010	2011	2003	2005	2001
		18"		24"	27"	30"	36"	42"	48"			
	FROM TO	CL III (LF)	CL IV (LF)	CL III (LF)	CL III (LF)	CL III (LF)	CL III (LF)	CL III (LF)	CL III (LF)	* STRUCT EXCAV. (CY)	CEM STABIL BKFL (CY)	TRENCH EXCAVATION PROTECTION (LF)
	TOTAL FROM PREVIOUS SHEET:	11723.00		6758.50	76.00	2515.50	1308.00	1786.00	1315.00		79.24	12065.00
	CI-J55 JCT-3							50.00		57.20		52.50
	STUB 3 JCT-3			19.00						10.47		19.00
	JCT-3 CI-J57							115.00		131.58		120.00
J 2	CI-J2 CI-J4	128.00										132.00
	CI-J4 CI-J6	112.00										117.00
	CI-J6 CI-J8	219.00								346.22		40.00
	CI-J8 CI-J10	139.00										0.00
	CI-J10 CI-J14	267.50										0.00
	CI-J14 CI-J18			222.00								0.00
	CI-J18 CI-J20			171.50								0.00
	CI-J20 CI-J22			128.00								0.00
	CI-J22 CI-J24			95.00								0.00
	CI-J24 CI-J26			119.00								0.00
	CI-J26 CI-J28			151.50								0.00
	CI-J28 CI-J30			166.00								0.00
	CI-J30 CI-J32			197.00								5.00
	CI-J32 CI-J34			188.00								182.00
	CI-J34 CI-J36			216.00						761.88		5.00
	CI-J36 CI-J38			198.50								193.00
	CI-J38 CI-J40			207.00								0.00
	CI-J40 CI-J44			241.00								0.00
	CI-J44 CI-J46			214.00								0.00
	CI-J46 CI-J48			170.00								0.00
	CI-J48 CI-J50			140.00								0.00
	CI-J50 CI-J52			100.00								0.00
	CI-J52 CI-J54			118.00								104.00
	CI-J54 CI-J56			155.50								163.00
CN1	GI-C5-E						2.00					
	SHEET 1 TOTALS:	12588.00		9975.50	76.00	2515.50	1310.00	1951.00	1315.00		79.24	13197.50

*** FOR CONTRACTORS INFORMATION ONLY**

TXDOT
1.0000 ft / IN.

7/20/2011
I:\DALDGN\S\SH289\Design\sheets\DRNG\Inlet&StormSewer*SUMMARY.dgn

Inlet&StormSewer*SUMMARY.dgn

Texas Department of Transportation
© 2011

SH 289
FM 455 TO N BUS 289C
STORM SEWER SUMMARY TABLE

DESIGN	FED.RD. DIV.NO.	STATE PROJECT NO.		HIGHWAY NO.
SHM	6	SEE TITLE SHEET		SH 289
GRAPHICS OE	STATE	DISTRICT	COUNTY	SHEET NO.
CHECK SM	TEXAS	DALLAS	COLLIN	34
CHECK	CONTROL	SECTION	JOB	
	0091	03	P-201107-01	

...\Inlet&StormSewer*SUMMARY.dgn

SIGNING AND DELINEATION PROJECT SUMMARY

ITEM NO.	DESCRIPTION	UNIT	QUANTITY
644-2001	INS SM RD SN SUP &AM TY 10 BWG (1) SA (P)	EA	13
644-2004	INS SM RD SN SUP &AM TY 10 BWG (1) SA (T)	EA	22
644-2027	INS SM RD SN SUP & AM TY S80 (1) SA (U)	EA	2
644-2030	INS SM RD SN SUP & AM TY S80 (1) SA(U-BM)	EA	3
658-2240	INSTL OM ASSM (D-SW) SZ 1 (FLX) GF2	EA	12
658-2316	INSTL OM ASSM (OM-2Z) (FLX) GND	EA	14

SUMMARY OF ROADSIDE FLASHER INSTALLATION

ITEM	DESCRIPTION	UNIT	**QUANTITY**
0618-2018	CONDUIT (PVC)(SCHD 40)(2 ")	LF	**55**
0636-2001	ALUMINUM SIGNS (TY A)	SF	**30.5**
0682-2025	VEH SIG SEC (12 IN) LED (YEL)	EA	**2**
0684-2010	TRAF SIG CBL (TY A)(5 CONDR)(12 AWG)	LF	**115**
0685-2003	REMOVE RDSD FLASH BEACON ASSEMBLY	EA	**4**
0685-2004	INSTL RDSD FLASH BEACON ASSM (SOLAR PWRD)	EA	**2**
0687-2001	PED POLE ASSEMBLY	EA	**2**

Texas Department of Transportation
© 2011

SIGNING SUMMARY

SHEET 1 OF 1

DESIGN	FED.RD. DIV.NO.	FEDERAL-AID PROJECT NO.		HIGHWAY NO.
RM	6	SEE TITLE SHEET		SH 289
GRAPHICS RM	STATE	DISTRICT	COUNTY	SHEET NO.
CHECK FRC	TEXAS	DALLAS	COLLIN	35
CHECK MBY	CONTROL 0091	SECTION 03	JOB 031	

P-201107-01

DATE:
FILE:

DISCLAIMER: The use of this standard is governed by the "Texas Engineering Practice Act". No warranty of any kind is made by TxDOT for any purpose whatsoever. TxDOT assumes no responsibility for the conversion of this standard to other formats or for incorrect results or damages resulting from its use.

SUMMARY OF SMALL SIGNS

SM RD SGN ASSM TY XXXXX(X)XX(X-XXXX)

- **Post Type**: FRP = Fiberglass; TWT = Thin-Wall; 10BWG = 10 BWG; S80 = Sch 80
- **Posts (1 or 2)**
- **Anchor Type**: UA=Univer-Conc; UB=Univer-Bolt; SA=Slip-Conc; SB=Slip-Bolt; WS=Wedge Steel; WP=Wedge Plastic
- **Mounting Designation**: P = Prefab. "Plain"; T = Prefab. "T"; U = Prefab. "U"; 1EXT or 2EXT = # of Ext. BM = Extruded Wind Beam; WC = 1.12 #/ft Wing Chan.; EXAL= Extruded Aluminum

PLAN SHEET NO.	SIGN NO.	SIGN NOMENCLATURE	SIGN TEXT	DIMENSIONS	ALUMINUM TYPE A	ALUMINUM TYPE G	Post Type	Posts	Anchor Type	Mounting Designation	
1	1	W6-2		3'-0"x3'-0"	X		10BWG	1	SA	T	
1	2	W9-2L		3'-0"x3'-0"	X		10BWG	1	SA	T	
1	3	W6-1		3'-0"x3'-0"	X		10BWG	1	SA	T	
1	4	W9-1R		2'-0"x2'-6"	X		10BWG	1	SA	T	
1	5	W1-10	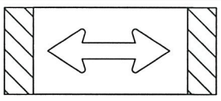	8'-0"x3'-0"	X		S80	1	SA	U	BM
1	6	M3-3	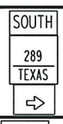	2'-0"x1'-0"	X						
		M1-6T		2'-0"x2'-0"	X		S80	1	SA	U	
		M6-1		1'-9"x1'-3"	X						
1	6	M3-1		2'-0"x1'-0"	X						
		M1-6T		2'-0"x2'-0"	X						
		M6-1		1'-9"x1'-3"	X						
1	7	M3-1	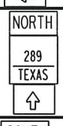	2'-0"x1'-0"							
		M1-6T		2'-0"x2'-0"	X		S80	1	SA	U	
		M6-1		1'-9"x1'-3"	X						
1	7	M3-3	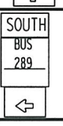	2'-0"x1'-0"	X						
		M1-6T		2'-0"x2'-0"	X						
		M6-1			X						
				1'-9"x1'-3"							
1	8	R6-1R	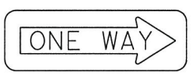	3'-0"x1'-0"	X		10BWG	1	SA	T	
1	9	R1-1		3'-0"x3'-0"	X		10BWG	1	SA	T	
1	10	R1-1		3'-0"x3'-0"	X		10BWG	1	SA	T	
1	11	M3-3		2'-0"x1'-0"	X						
		M1-6T		2'-0"x2'-0"	X		10BWG	1	SA	P	
2	1	R1-1		3'-0"x3'-0"	X		10BWG	1	SA	T	
2	2	M2-1	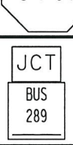	1'-9"x1'-3"	X						
		M1-6T		2'-0"x2'-0"	X		10BWG	P	SA	P	
2	3	W1-10	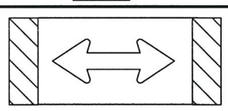	8'-0"x3'-0"							
					X		S80	1	SA	U	BM
2	4	R2-1		2'-0"x2'-6"	X		10BWG	1	SA	P	

ALUMINUM SIGN BLANKS (TYPE A)

Square Ft.	Min. Thickness
Less than 7.5	0.080"
7.5 to 15	0.100"
Greater than 15	0.125"

Sign supports shall be located as shown on the plans, except that the Engineer may shift the sign supports, within design guidelines, where necessary to secure a more desirable location or to avoid conflict with utilities. Unless otherwise shown on the plans, the Contractor shall stake and the Engineer will verify all sign support locations.

©TxDOT MAY, 1987

REVISIONS	
DN: TxDOT	11-93 7-02
CK: TxDOT	8-95 2-07
DW: TxDOT	1-02 9-08
CK: TxDOT	

SUMMARY OF SMALL SIGNS SOSS

Sheet 1 of 3

DIST	COUNTY		
18	P-2011-07-01		
CONT	SECT	JOB	HIGHWAY
0091	03	021	SH 289

SHEET NO. 36

DATE:
FILE:

DISCLAIMER: The use of this standard is governed by the "Texas Engineering Practice Act". No warranty of any kind is made by TxDOT for any purpose whatsoever. TxDOT assumes no responsibility for the conversion of this standard to other formats or for incorrect results or damages resulting from its use.

SUMMARY OF SMALL SIGNS

SM RD SGN ASSM TY XXXXX(X)XX(X-XXXX)

Post Type
FRP = Fiberglass
TWT = Thin-Wall
10BWG = 10 BWG
S80 = Sch 80

Posts (1 or 2)

Anchor Type
UA=Univer-Conc
UB=Univer-Bolt
SA=Slip-Conc
SB=Slip-Bolt
WS=Wedge Steel
WP=Wedge Plastic

Mounting Designation
P = Prefab. "Plain"
T = Prefab. "T"
U = Prefab. "U"
1EXT or 2EXT = # of Ext.
BM = Extruded Wind Beam
WC = 1.12 #/ft Wing Chan.
EXAL= Extruded Aluminum

PLAN SHEET NO.	SIGN NO.	SIGN COLOR	SIGN TEXT	DIMENSIONS	ALUMINUM TYPE A	ALUMINUM TYPE G	Post Type	Posts (1 or 2)	Anchor Type	Mounting Designation	
2	5	R1-1	STOP	3'-0"x3'-0"	X		10BWG	1	SA	T	
2	6	W1-10	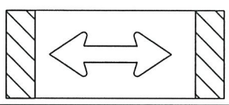	8'-0"x3'-0"	X		S80	1	SA	U	BM
3	1	R2-1	SPEED LIMIT XX	2'-0"x2'-6"	X		10BWG	1	SA	P	
3	2	R1-1	STOP	3'-0"x3'-0"	X		10BWG	1	SA	T	
4	1	R1-1	STOP	3'-0"x3'-0"	X		10BWG	1	SA	T	
4	2	M3-1	NORTH	2'-0"x1'-0"	X						
		M1-6T	289 / TEXAS	2'-0"x2'-0"	X		10BWG	1	SA	P	
4	3	M3-3	SOUTH	2'-0"x1'-0"	X						
		M1-6T	289 / TEXAS	2'-0"x2'-0"	X		10BWG	1	SA	P	
5	1	D12-4T	ADOPT A HIGHWAY NEXT 2 MILES DFW GROTTO CAVING CLUB	4'-0"x4'-0"	X		10BWG	1	SA	T	
6	1	D12-4T	ADOPT A HIGHWAY NEXT 2 MILES VOLUNTEERS OF DEBBIE HOWARD KW REALITY	4'-0"x4'-0"	X		10BWG	1	SA	T	
6	2	R2-1	SPEED LIMIT XX	2'-0"x2'-6"	X		10BWG	1	SA	P	
6	3	R2-1	SPEED LIMIT XX	2'-0"x2'-6"	X		10BWG	1	SA	P	
7	1	R1-1	STOP	3'-0"x3'-0"	X		10BWG	1	SA	T	
7	2	R1-1	STOP	3'-0"x3'-0"	X		10BWG	1	SA	T	
8	1	R2-1	SPEED LIMIT XX	2'-0"x2'-6"	X		10BWG	1	SA	P	
8	2	R2-1	SPEED LIMIT XX	2'-0"x2'-6"	X		10BWG	1	SA	P	

ALUMINUM SIGN BLANKS (TYPE A)

Square Ft.	Min. Thickness
Less than 7.5	0.080"
7.5 to 15	0.100"
Greater than 15	0.125"

Sign supports shall be located as shown on the plans, except that the Engineer may shift the sign supports within design guidelines, where necessary to secure a more desirable location or to avoid conflict with utilities. Unless otherwise shown on the plans, the Contractor shall stake and the Engineer will verify all sign support locations.

© TxDOT May, 1987

DN: TxDOT REVISIONS
CK: TxDOT 11-93 7-02
DW: TxDOT 8-95 2-07
CK: TxDOT 1-02 9-08

DIST	COUNTY	CONT	SECT	JOB	HIGHWAY
18	COLLIN	0091	03	021	SH 289

SUMMARY OF SMALL SIGNS SOSS

Sheet 2 of 3

P 2011107-01

SHEET NO. 37

DATE:
FILE:

DISCLAIMER: The use of this standard is governed by the "Texas Engineering Practice Act". No warranty of any kind is made by TxDOT for any purpose whatsoever. TxDOT assumes no responsibility for the conversion of this standard to other formats or for incorrect results or damages resulting from its use.

SUMMARY OF SMALL SIGNS

SM RD SGN ASSM TY XXXXX(X)XX(X-XXXX)

- **Post Type**: FRP = Fiberglass; TWT = Thin-Wall; 10BWG = 10 BWG; S80 = Sch 80
- **Posts (1 or 2)**
- **Anchor Type**: UA=Univer-Conc; UB=Univer-Bolt; SA=Slip-Conc; SB=Slip-Bolt; WS=Wedge Steel; WP=Wedge Plastic
- **Mounting Designation**: P = Prefab. "Plain"; T = Prefab. "T"; U = Prefab. "U"
- 1EXT or 2EXT = # of Ext.; BM = Extruded Wind Beam; WC = 1.12 #/ft Wing Chan.; EXAL= Extruded Aluminum

PLAN SHEET NO.	SIGN NO.	SIGN COLOR	SIGN TEXT	DIMENSIONS	ALUMINUM TYPE A	ALUMINUM TYPE G	Post Type	Posts	Anchor Type	Mounting Designation
8	3	R1-1	STOP	3'-0"x3'-0"	X		10BWG	1	SA	T
9	1	R1-1	STOP	3'-0"x3'-0"	X		10BWG	1	SA	T
9	2	D2-1	Gunter 10	6'-0"x1'-6"	X		10BWG	1	SA	T
9	3	R1-1	STOP	3'-0"x3'-0"	X		10BWG	1	SA	T
9	4	M2-1	JCT / FM 455	1'-9"x1'-3"	X					
		M1-6T		2'-0"x2'-0"	X		10BWG	1	SA	P
9	5	R2-1	SPEED LIMIT XX	2'-0"x2'-6"	X		10BWG	1	SA	P
9	6	D12-4T	ADOPT A HIGHWAY NEXT 2 MILES VOLUNTEERS OF DEBBIE HOWARD KW REALITY	4'-0"x4'-0"	X		10BWG	1	SA	T
9	7	R1-1	STOP	3'-0"x3'-0"	X		10BWG	1	SA	T
9	8	D1-2	⇦ Weston / Pilot Point ⇨	7'-6"x2'-6"	X		10BWG	1	SA	T
10	1	M3-1	NORTH / 289 / TEXAS	2'-0"x1'-0"	X					
		M1-6T		2'-0"x2'-0"	X		10BWG	1	SA	P
		S1-1		36"x36"	X		INSTALL ON FLASHER POLES P1 AND P3 (PAID FOR BY ITEM 636).			
		W13-1	40 M.P.H.	30"x30"	X		INSTALL ON FLASHER POLES P1 AND P3 (PAID FOR BY ITEM 636).			

ALUMINUM SIGN BLANKS (TYPE A)

Square Ft.	Min. Thickness
Less than 7.5	0.080"
7.5 to 15	0.100"
Greater than 15	0.125"

Sign supports shall be located as shown on the plans, except that the Engineer may shift the sign supports within design guidelines, where necessary to secure a more desirable location or to avoid conflict with utilities. Unless otherwise shown on the plans, the Contractor shall stake and the Engineer will verify all sign support locations.

© TxDOT May 1987

DN: TxDOT CK: TxDOT DW: TxDOT CK: TxDOT

REVISIONS: 11-93, 8-95, 1-02, 7-02, 2-07, 9-08

SUMMARY OF SMALL SIGNS SOSS

Sheet 3 of 3

DIST	COUNTY	CONT	SECT	JOB	HIGHWAY
18		0091	03	021	SH 289

SHEET NO. 36

INITIAL PHASE SEQUENCE OF CONSTRUCTION:

1) PRIOR TO THE START OF THE PROJECT, SET UP THE ADVANCE WARNING SIGNS AND SPEED LIMIT SIGNS FOR THIS PROJECT'S TRAFFIC CONTROL ACCORDING TO THE ADVANCE WARNING SIGNS SHEET OR AS DIRECTED BY THE ENGINEER.

2) INSTALL SW3P CONTROL MEASURES TO PROTECT THE STORM SEWER SYSTEM(S) AND TO PREVENT ANY CONSTRUCTION DEBRIS FROM ENTERING OR EXITING ANY DITCH OR CHANNEL ON THE PROJECT.

3) PRIOR TO PHASE 1 INSTALL TEMPORARY ASPHALT PAVEMENTS AT MAIN INTERSECTIONS AND CROSS STREETS WHERE TURNING MOVEMENTS ARE ESSENTIAL FOR LARGER VEHICLES ENTERING AND EXISTING THE TRAVELWAY IN PHASE 1. THE CONTRACTOR SHALL USE THE MUTCD AND TCP STANDARDS TO ACCOMPLISH THIS WORK OR AS APPROVED BY THE ENGINEER.

4) BUILD TEMPORARY PAVEMENT "DETOUR" & ALL OTHER ASPHALTIC LEVEL-UP BEFORE THE ACTUAL PHASE I CONSTRUCTION.

PHASE 1 SEQUENCE OF CONSTRUCTION:

1) SET UP TRAFFIC CONTROL FOR PHASE 1 CONSTRUCTION PER TRAFFIC CONTROL PLAN SHEETS WITH TEXAS MUTCD AND AS DIRECTED BY THE ENGINEER.

2) REMOVE THE APPLICABLE EXISTING SIGNS AND ILLUMINATION POLES THAT WILL INTERFERE WITH CONSTRUCTION PHASES OR AS DIRECTED BY THE ENGINEER.

3) THE CONTRACTOR WILL INSTALL PROPOSED DRAINAGE STRUCTURES AND CONCRETE PAVEMENT BETWEEN STATIONS: 121+00 TO 133+50, STA. 136+00 TO 180+00, STA. 182+00 TO 259+00, STA. 261+50 TO 287+00, AND STA. 289+50 TO 303+05 WITHIN THIS PHASE OF CONSTRUCTION.

3.1 THE CONTRACTOR SHALL REMOVE THE EXISTING HEADWALLS AND CULVERTS WHERE PLANNED TO BE UPGRADED. THE CONTRACTOR SHALL PROVIDE TEMPORARY DRAINAGE FOR THESE EXISTING STRUCTURES IN THE CASE OF BAD WEATHER.

3.1.1 THE CONTRACTOR SHALL INSTALL THE PROPOSED CULVERTS ACCORDING TO THE DRAINAGE PLAN LAYOUT SHEETS. TEMPORARY SHORING WILL BE NECESSARY IN AREAS WHERE REQUIRED.

3.2 CONSTRUCT DRIVEWAYS AND CONCRETE PAVEMENT ACCORDING TO THE PLAN AND PROFILE SHEETS. THE CONTRACTOR SHALL BUILD AS MUCH OF THE INTERSECTIONS AND CROSS STREETS AS FEASIBLE; THE TCP FOR THIS WORK WILL BE HANDLED ACCORDING TO PLAN OR USING THE MUTCD AND TCP STANDARDS OR AS DIRECTED BY THE ENGINEER.

3.2.1 AFTER DRAINAGE AND PAVEMENT STRUCTURES ARE COMPLETE THE CONTRACTOR SHALL PLACE IMPLEMENT PHASE 2 WORK ZONE PAVEMENT MARKINGS.

4) THE CONTRACTOR SHALL PREPARE TO SHIFT TRAFFIC AND IMPLEMENT PHASE 2 CONSTRUCTION.

PHASE 2 SEQUENCE OF CONSTRUCTION:

1) SET UP TRAFFIC CONTROL FOR PHASE II CONSTRUCTION PER TRAFFIC CONTROL PLAN SHEETS WITH TEXAS MUTCD AND AS DIRECTED BY THE ENGINEER.

2) THE CONTRACTOR SHALL INSTALL PROPOSED DRAINAGE STRUCTURES AND CONCRETE PAVEMENT BETWEEN STATIONS: 121+00 TO 133+50, STA. 136+00 TO 180+00, STA. 182+00 TO 259+00, STA. 261+50 TO 287+00, AND STA. 289+50 TO 303+05 WITHIN THIS PHASE OF CONSTRUCTION.

2.1 THE CONTRACTOR SHALL REMOVE THE EXISTING HEADWALLS AND CULVERTS WHERE PLANNED TO BE UPGRADED. THE CONTRACTOR SHALL PROVIDE TEMPORARY DRAINAGE FOR THESE STRUCTURES IN THE CASE OF BAD WEATHER.

2.1.1 THE CONTRACTOR SHALL INSTALL THE PROPOSED CULVERTS ACCORDING TO THE DRAINAGE PLAN LAYOUT SHEETS. TEMPORARY SHORING WILL BE NECESSARY IN AREAS WHERE THE CUT IS 5 FOOT ARE GREATER.

2.2 CONSTRUCT DRIVEWAYS AND CONCRETE PAVEMENT ACCORDING TO THE PLAN AND PROFILE SHEETS. THE CONTRACTOR SHALL BUILD THE INTERSECTIONS AND CROSS STREETS; TCP FOR THIS WORK WILL BE HANDLED ACCORDING TO PLAN, USING THE MUTCD AND TCP STANDARDS OR AS DIRECTED BY THE ENGINEER.

3) AFTER DRAINAGE AND PAVEMENT STRUCTURES ARE COMPLETE THE CONTRACTOR SHALL IMPLEMENT FINAL PAVEMENT MARKINGS. THE FINAL MARKING WORK CAN BE HANDLED USING THE MUTCD AND TCP STANDARDS OR AS DIRECTED BY THE ENGINEER.

LEVELS DISPL... 62 63 52 55

STATE OF TEXAS
HASSAN SAM MOGHADASSI
84231
LICENSED PROFESSIONAL ENGINEER

H. Moghadassi, P.E. 7/12/11
Signature of Registrant & Date

Texas Department of Transportation
© 2011

SH 289
TRAFFIC CONTROL PALN
SEQUENCE NARRATIVE

SHEET 1 of 1

DESIGN	FED. RD. DIV. NO.	STATE PROJECT NO.		HIGHWAY NO.
DT	6	(SEE TITLE SHEET)		SH 289
GRAPHICS	STATE	DISTRICT	COUNTY	SHEET NO.
DT	TEXAS	DALLAS	DALLAS	
CHECK	CONTROL	SECTION	JOB	39
shm	0091	03	P-201107-01	
CHECK				

TXDOT
200.0000 ft / IN.

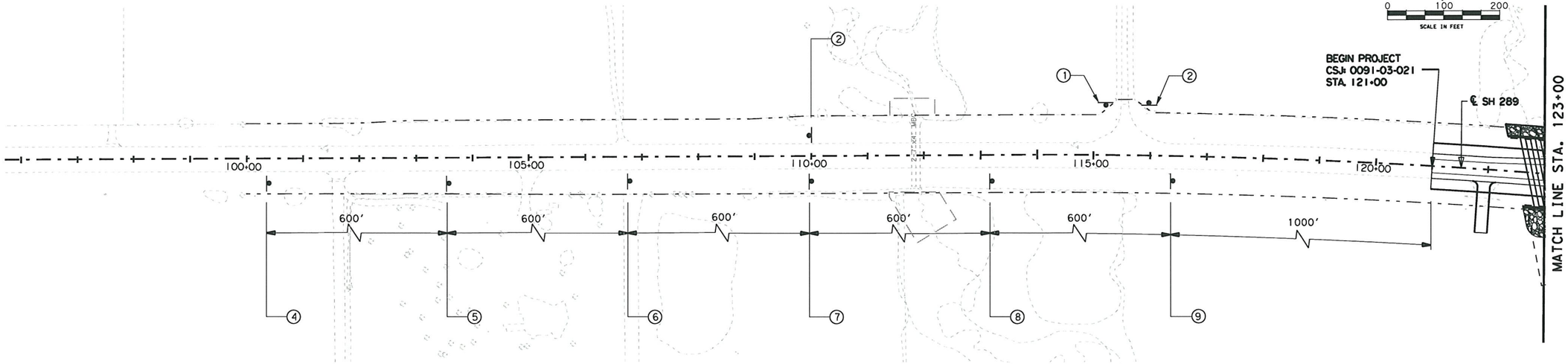

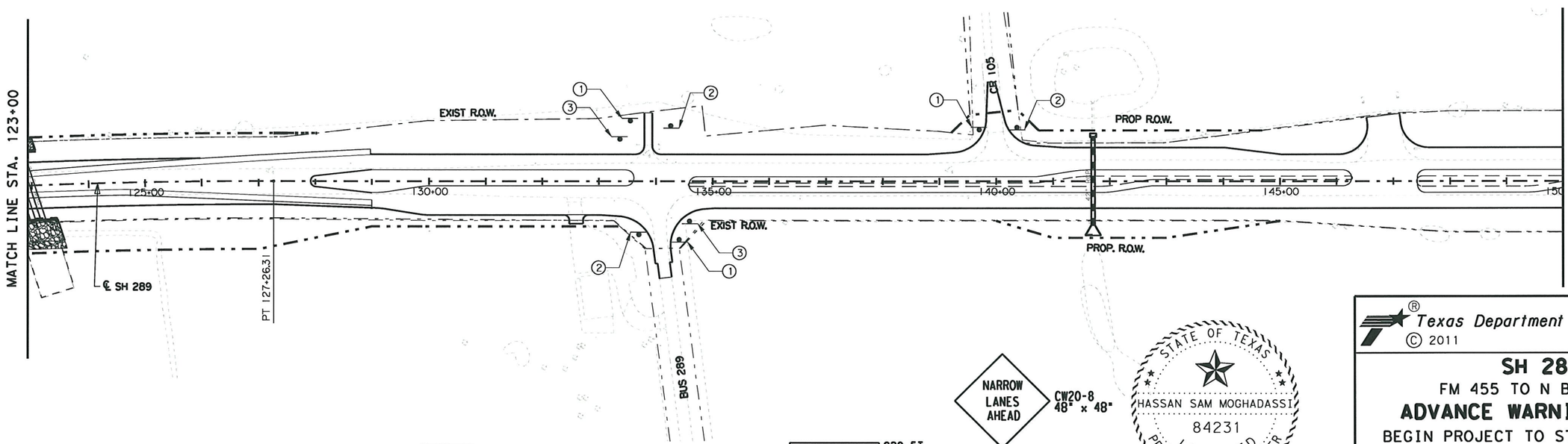

289AW01.dgn

ROAD WORK AHEAD
CW20-1D
48" X 48"
①

END ROAD WORK
G20-2a
48" x 24"
②

ROAD WORK NEXT XX MILES →
G20-1bL (R)
72" x 24"
③

OBEY WARNING SIGNS STATE LAW
R20-3
48" x 42"
④

WORK ZONE
TRAFFIC FINES DOUBLE
WHEN WORKERS ARE PRESENT
G20-9
36" x 26"
R20-5
36" x 36"
R20-5
PLAQUE
36" x 18"
⑤

ROAD WORK AHEAD
CW20-1D
48" x 48"
⑥

DO NOT PASS
R4-1
36" x 48"
⑦

BEGIN ROAD WORK NEXT MILES
NAME ADDRESS CITY STATE CONTRACTOR
G20-5T
60" x 24"
G20-6
60" x 42"
⑧

NARROW LANES AHEAD
CW20-8
48" x 48"
45 M.P.H.
CW13-1
24" x 24"
⑨

STATE OF TEXAS
HASSAN SAM MOGHADASSI
84231
LICENSED
PROFESSIONAL ENGINEER

H. Moghadassi, P.E. 7/12/11
Signature of Registrant & Date

Texas Department of Transportation
© 2011

SH 289
FM 455 TO N BUS 289C
ADVANCE WARNING SIGNS
BEGIN PROJECT TO STA. 150+00.00

SCALE: 1"= 200' Sheet 1 of 4

DESIGN	FED. RD. DIV. NO.	STATE PROJECT NO.		HIGHWAY NO.
SHM	6	SEE TITLE SHEET		SH 289
GRAPHICS	STATE	DISTRICT	COUNTY	SHEET NO.
OE	TEXAS	DALLAS	COLLIN	40
CHECK	CONTROL	SECTION	JOB	
SM	0091	03	201107-01	
CHECK			P-2011	

7/11/2011
T:\DALDGN\S\SH289\Design\sheets\TCP\AW*SIGNS\289AW01.dgn
...\TCP\AW*SIGNS\289AW01.dgn

TXDOT
200.0000 ft / IN.

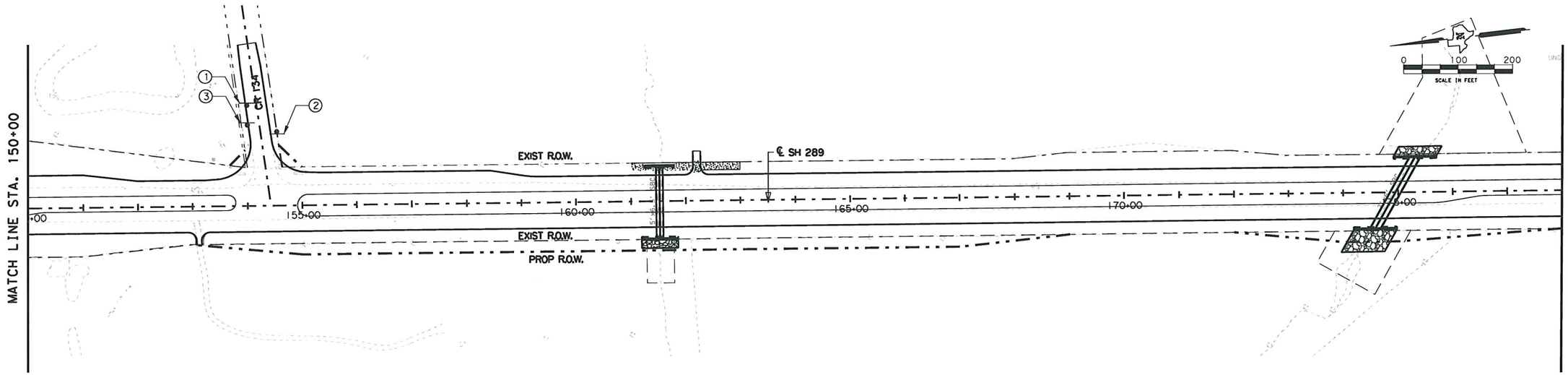

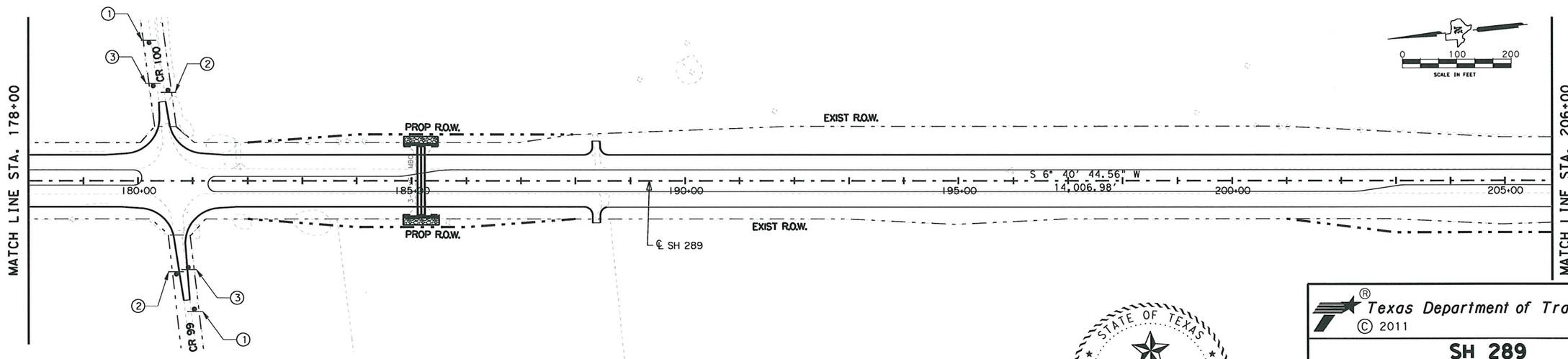

289AW02.dgn

ROAD WORK AHEAD	END ROAD WORK	ROAD WORK NEXT XX MILES →
CW20-1D 48" X 48" ①	G20-2a 48" x 24" ②	G20-1bL(R) 72" x 24" ③

STATE OF TEXAS
HASSAN SAM MOGHADASSI
84231
LICENSED
PROFESSIONAL ENGINEER

H. Moghadassi, P.E. 7/12/11
Signature of Registrant & Date

Texas Department of Transportation
© 2011

SH 289
FM 455 TO N BUS 289C
ADVANCE WARNING SIGNS
STA. 150+00.00 TO STA. 206+00.00

SCALE: 1"= 200' Sheet 2 of 4

DESIGN	FED.RD. DIV.NO.	STATE PROJECT NO.		HIGHWAY NO.
SHM	6	SEE TITLE SHEET		SH 289
GRAPHICS OE	STATE	DISTRICT	COUNTY	SHEET NO.
CHECK SM	TEXAS	DALLAS	COLLIN	41
CHECK	CONTROL	SECTION	JOB	
	0091	03		

P-201107-01

7/11/2011
t:\dal\dgn\sh289\design\sheets\tcp\aw*signs\289AW02.dgn
...\tcp\aw*signs\289AW02.dgn

TXDOT
200.0000 ft / IN.

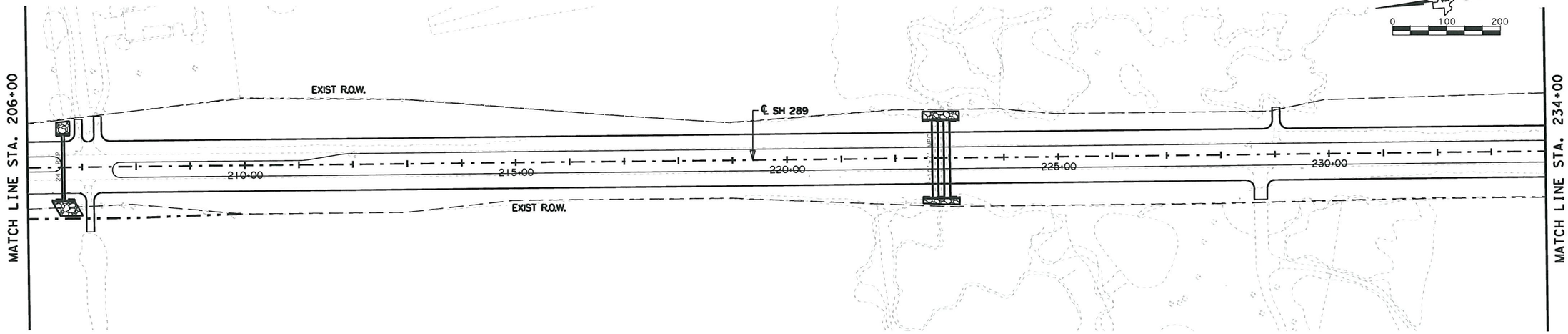

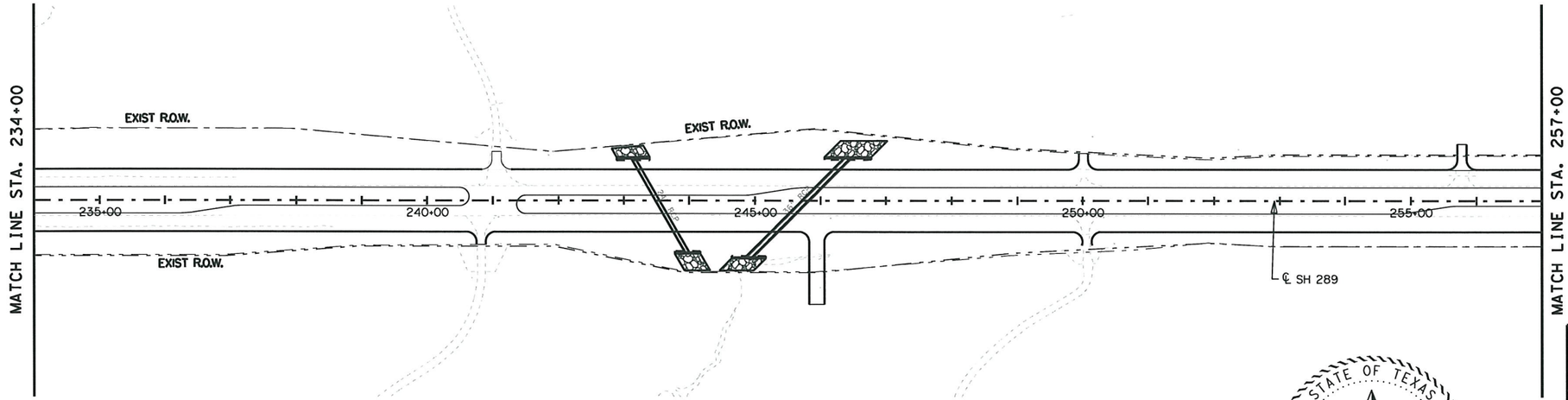

289AW03.dgn

Texas Department of Transportation
© 2011

STATE OF TEXAS
HASSAN SAM MOGHADASSI
84231
LICENSED
PROFESSIONAL ENGINEER

H. Moghadassi ,P.E. 7/12/11
Signature of Registrant & Date

SH 289
FM 455 TO N BUS 289C
ADVANCE WARNING SIGNS
STA. 206+00.00 TO STA. 257+00.00

SCALE: 1"= 200 Sheet 3 of 4

DESIGN	FED. RD. DIV. NO.	STATE PROJECT NO.		HIGHWAY NO.
SHM	6	SEE TITLE SHEET		SH 289
GRAPHICS OE	STATE	DISTRICT	COUNTY	SHEET NO.
CHECK SM	TEXAS	DALLAS	COLLIN	42
CHECK	CONTROL	SECTION	JOB	
	0091	03	P-201107-01	

...\tcp\aw*signs\289AW03.dgn

7/11/2011
t:\dal\dgn*s\sh289\design\sheets\tcp\aw*signs\289AW03.dgn

$USER$
$SCALE$

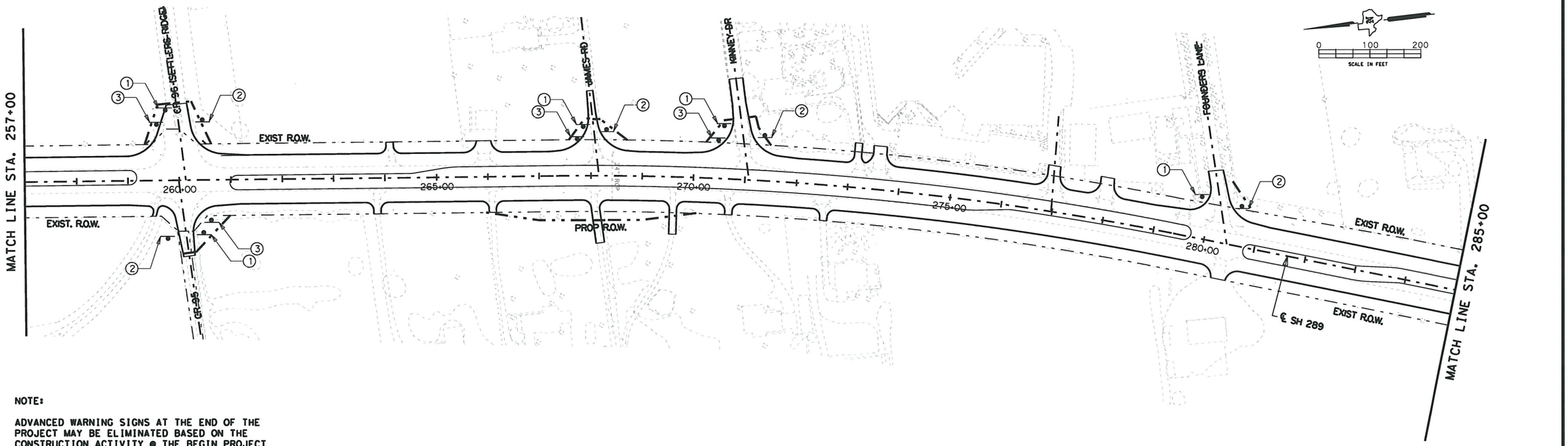

NOTE:

ADVANCED WARNING SIGNS AT THE END OF THE PROJECT MAY BE ELIMINATED BASED ON THE CONSTRUCTION ACTIVITY @ THE BEGIN PROJECT LOCATION OF CSJ: 0091-04-055.

THE CONTRACTOR SHALL COORDINATE THE CONSTRUCTION ACTIVITIES WITH THE CONTRACTOR WORKING ON THE PROJECT SOUTH OF THIS CONSTRUCTION.

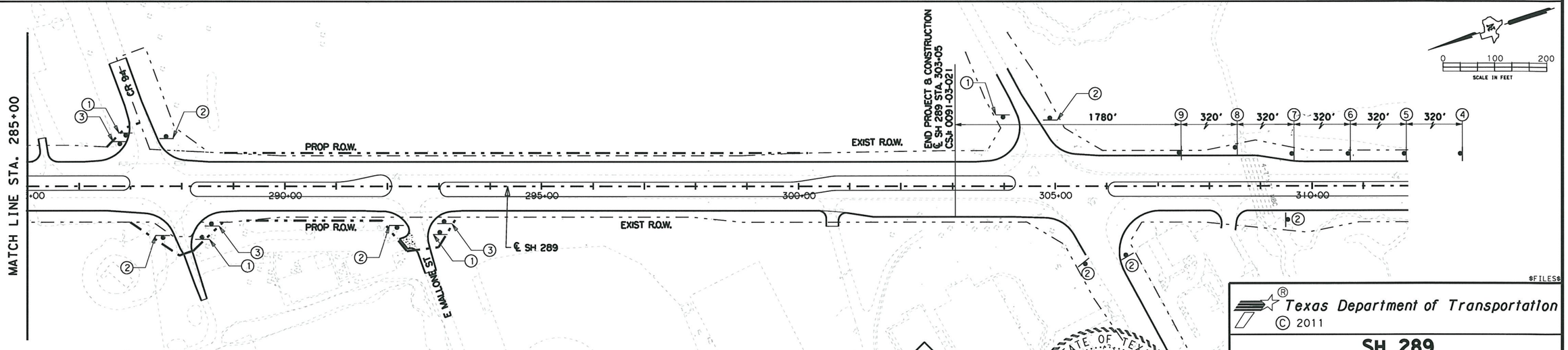

ROAD WORK AHEAD	END ROAD WORK	ROAD WORK NEXT XX MILES →	OBEY WARNING SIGNS STATE LAW	WORK ZONE / TRAFFIC FINES DOUBLE / WHEN WORKERS ARE PRESENT	ROAD WORK AHEAD	DO NOT PASS	BEGIN ROAD WORK NEXT MILES / NAME ADDRESS CITY STATE CONTRACTOR	NARROW LANES AHEAD / 45 M.P.H.
CW20-1D 48" X 48"	G20-2a 48" x 24"	G20-1bL (R) 72" x 24"	R20-3 48" x 42"	G20-9 36" x 26" / R20-5 36" x 36" / R20-5 PLAQUE 36" x 18"	CW20-1D 48" X 48"	R4-1 36" x 48"	G20-5T 60" x 24" / G20-6 60" x 42"	CW20-8 48" x 48" / CW13-1 24" x 24"
①	②	③	④	⑤	⑥	⑦	⑧	⑨

H.W. Moghadassi , P.E. 12/29/11
Signature of Registrant & Date

STATE OF TEXAS
HASSAN SAM MOGHADASSI
84231
LICENSED
PROFESSIONAL ENGINEER

Texas Department of Transportation
© 2011

SH 289
FM 455 TO N BUS 289C
ADVANCED WARNING SIGNS
STA. 257+00.00 TO END CONSTRUCTION

SCALE: 1"= 200' Sheet 4 of 4

DESIGN	FED.RD. DIV.NO.	STATE PROJECT NO.		HIGHWAY NO.
SHM	6	SEE TITLE SHEET		SH 289
GRAPHICS	STATE	DISTRICT	COUNTY	SHEET NO.
OE	TEXAS	DALLAS	COLLIN	
CHECK	CONTROL	SECTION	JOB	
SM	0091	03		43
CHECK				

P-201107-01

$FILES$

$FILEABBREV$

12/29/2011
T:\DALDGN#S\SH289\Design\sheets\TCP\AW#SIGNS\289AW04.dgn

TXDOT
16.0000 ft / IN.

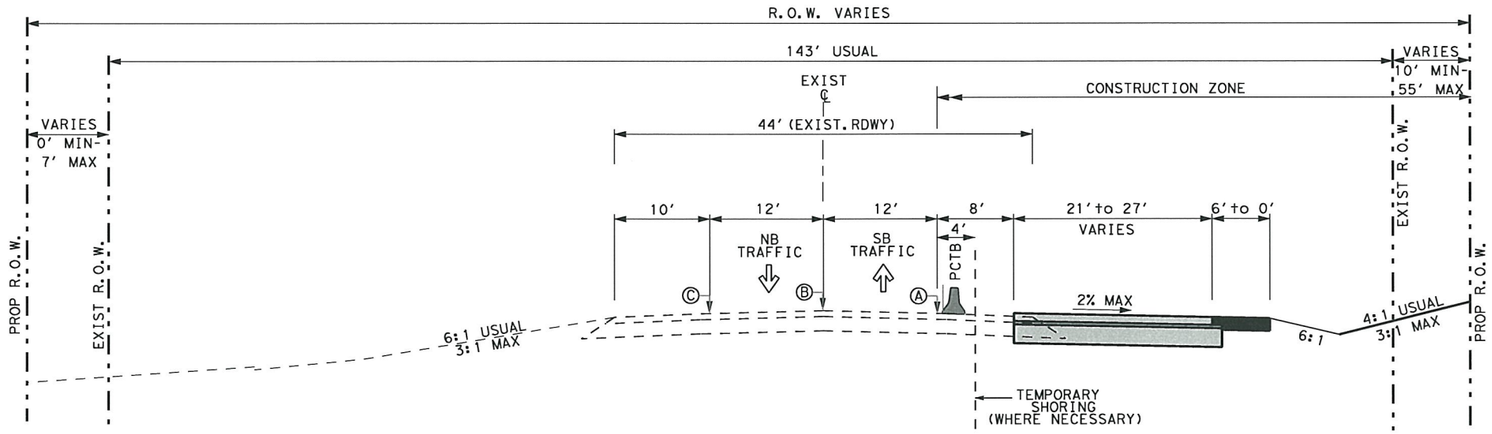

PHASE I CONSTRUCTION - SOUTHBOUND
PROPOSED TRANSITION 4 LANE RURAL TO 4 LANE URBAN

STA. 121+00 TO STA. 129+00.00

LEGEND

- CONSTRUCTION THIS PHASE
- CONSTRUCTION PREVIOUS PHASE
- TEMPORARY ASPHALT 12" TYPE "B"
- Ⓐ WK ZN PAV MRK. NON-REMOVE (W) 4" (SLD W/MRKR)
- Ⓑ WK ZN PAV MRK. NON-REMOVE (Y) 4" (SLD W/MRKR)
- Ⓒ EXIST PAV MRK.

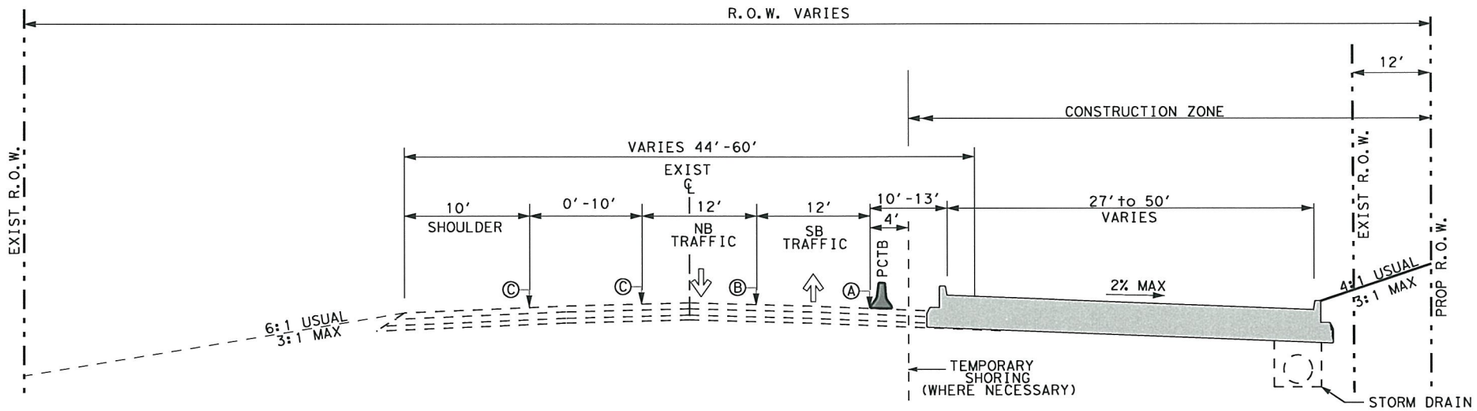

PHASE I CONSTRUCTION - SOUTHBOUND
PROPOSED 4 LANE URBAN

STA. 129+00 TO STA. 133+47

STATE OF TEXAS
HASSAN SAM MOGHADASSI
84231
LICENSED
PROFESSIONAL ENGINEER

H. Moghadassi , P.E. 7/12/11
Signature of Registrant & Date

Texas Department of Transportation
© 2011

SH 289

FM455 TO N BUS 289C

TRAFFIC CONTROL PLAN
PHASE I TYPICAL SECTIONS

SCALE: NOT TO SCALE — Sheet 1 of 4

DESIGN	FED.RD. DIV.NO.	PROJECT NO.		HIGHWAY NO.
SHM	6	SEE TITLE SHEET		SH 289
GRAPHICS OE	STATE	DISTRICT	COUNTY	SHEET NO.
CHECK SHM	TEXAS	DALLAS	COLLIN	44
CHECK	CONTROL	SECTION	JOB	
	0091	03	P-201107-01	

7/11/2011
t:\dal\dgn*s\sh289\design\sheets\tcp\tcp*typ\289TypX01.dgn
...\tcp\tcp*typ\289TypX01.dgn

TXDOT
16.0000 ft / IN.

LEGEND

- CONSTRUCTION THIS PHASE
- CONSTRUCTION PREVIOUS PHASE
- TEMPORARY ASPHALT 12" TYPE "B"
- Ⓐ WK ZN PAV MRK. NON-REMOV (W) 4" (SLD W/MRKR)
- Ⓑ WK ZN PAV MRK. NON-REMOV (Y) 4" (SLD W/MRKR)
- Ⓒ EXIST PAV MRK.

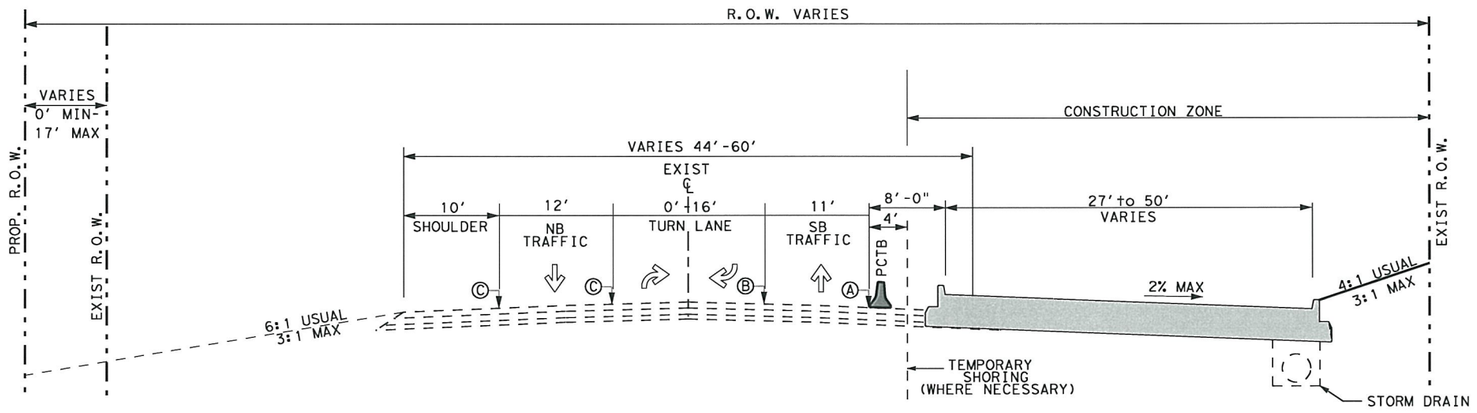

PHASE I CONSTRUCTION - SOUTHBOUND
PROPOSED 4 LANE URBAN

STA. 133+47 TO STA. 139+40

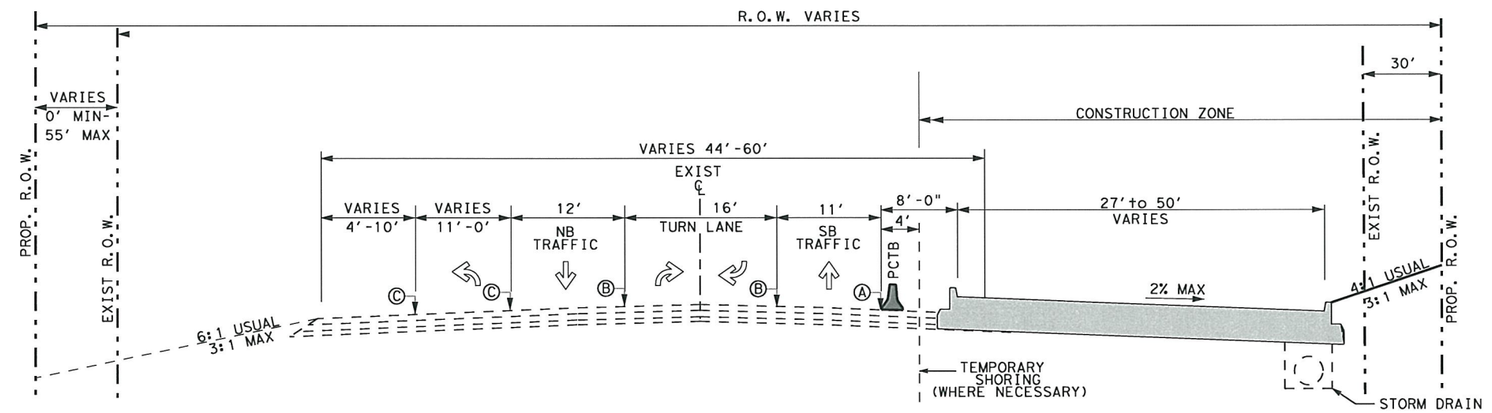

PHASE I CONSTRUCTION - SOUTHBOUND
PROPOSED 4 LANE URBAN

STA. 139+40 TO STA. 154+60

STATE OF TEXAS
HASSAN SAM MOGHADASSI
84231
LICENSED
PROFESSIONAL ENGINEER

H.S. Moghadassi, P.E. 7/12/11
Signature of Registrant & Date

Texas Department of Transportation
© 2011

SH 289
FM455 TO N BUS 289C
TRAFFIC CONTROL PLAN
PHASE I TYPICAL SECTIONS

SCALE: NOT TO SCALE — Sheet 2 of 4

DESIGN	FED. RD. DIV. NO.	FEDERAL AID PROJECT NO.		HIGHWAY NO.
SHM	6	SEE TITLE SHEET		SH 289
GRAPHICS OE	STATE	DISTRICT	COUNTY	SHEET NO.
CHECK SHM	TEXAS	DALLAS	COLLIN	45
CHECK	CONTROL	SECTION	JOB	
	0091	03	P-201107-01	

7/11/2011
t:\dal\dgn*s\sh289\design\sheets\tcp\tcp*typ\289TypX01.dgn
...\tcp\tcp*typ\289TypX01.dgn

TXDOT
16.0000 ft / IN.

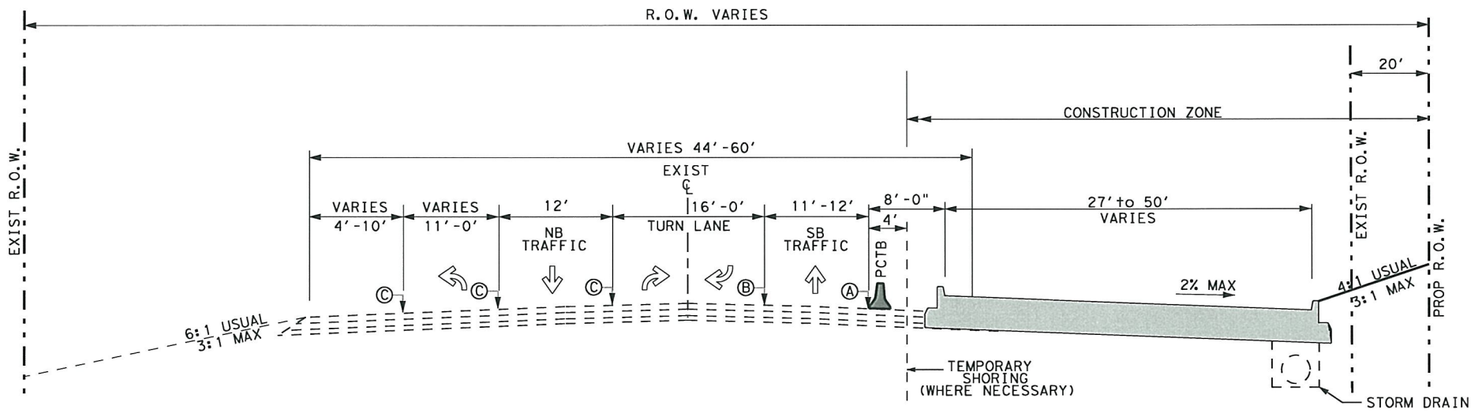

PHASE I CONSTRUCTION - SOUTHBOUND
PROPOSED 4 LANE URBAN

STA. 154+60 TO STA. 163+70

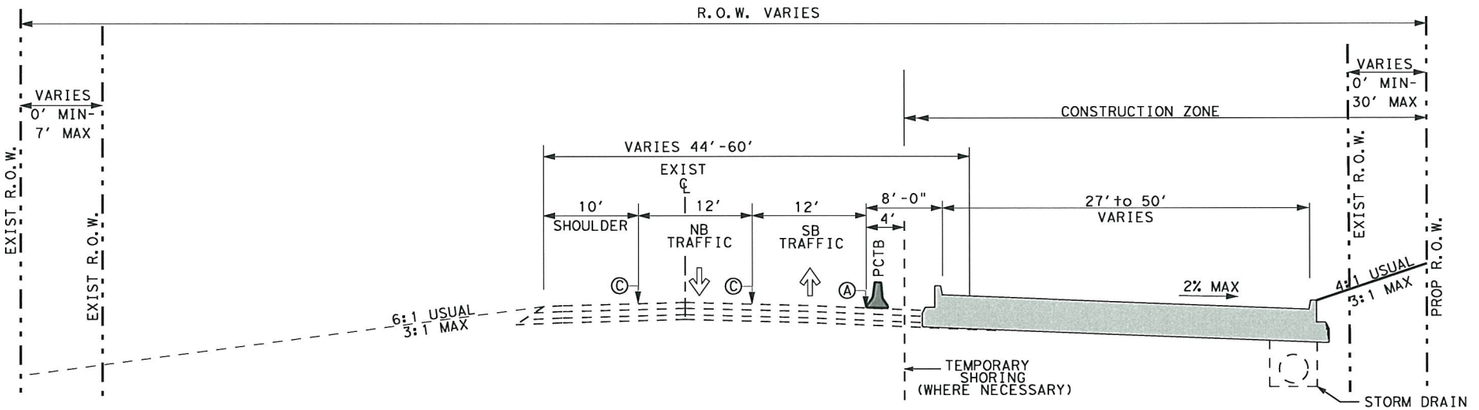

PHASE I CONSTRUCTION - SOUTHBOUND
PROPOSED 4 LANE URBAN

STA. 163+70 TO STA. 175+00
STA. 185+00 TO STA. 202+00
STA. 212+00 TO STA. 255+00
STA. 293+00 TO STA. 299+00

LEGEND

- CONSTRUCTION THIS PHASE
- CONSTRUCTION PREVIOUS PHASE
- TEMPORARY ASPHALT 12" TYPE "B"
- Ⓐ WK ZN PAV MRK. NON-REMOV (W) 4" (SLD W/MRKR)
- Ⓑ WK ZN PAV MRK. NON-REMOV (Y) 4" (SLD W/MRKR)
- Ⓒ EXIST PAV MRK.

STATE OF TEXAS
HASSAN SAM MOGHADASSI
84231
LICENSED
PROFESSIONAL ENGINEER

H. Moghadassi, P.E. 7/12/11
Signature of Registrant & Date

Texas Department of Transportation
© 2011

SH 289
FM455 TO N BUS 289C
TRAFFIC CONTROL PLAN
PHASE I TYPICAL SECTIONS

SCALE: NOT TO SCALE — Sheet 3 of 4

DESIGN	FED. RD. DIV. NO.	FEDERAL AID PROJECT NO.		HIGHWAY NO.
SHM	6	SEE TITLE SHEET		SH 289
GRAPHICS OE	STATE	DISTRICT	COUNTY	SHEET NO.
CHECK SHM	TEXAS	DALLAS	COLLIN	46
CHECK	CONTROL	SECTION	JOB	
	0091	03	201107-01	

P-201107-01

7/11/2011
I:\dal\dgn*s\sh289\design\sheets\tcp\tcp*typ\289typX01.dgn
...\tcp\tcp*typ\289typX01.dgn

TXDOT
16.0000 ft / IN.

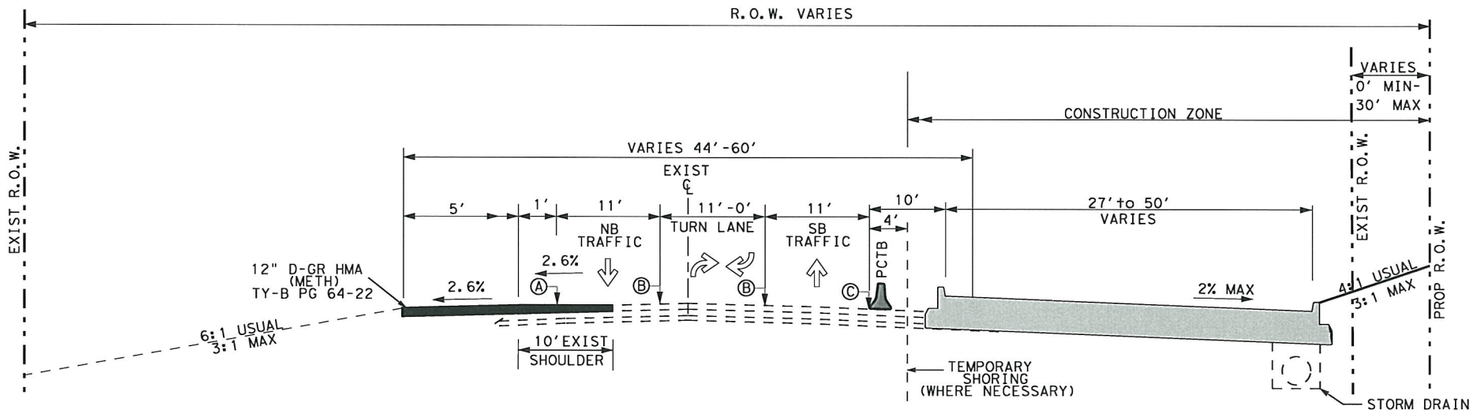

PHASE I CONSTRUCTION - SOUTHBOUND
PROPOSED 4 LANE URBAN

STA. 175+00 TO STA. 185+00
STA. 202+00 TO STA. 212+00
STA. 255+00 TO STA. 293+00
STA. 299+00 TO STA. 303+05

LEGEND

CONSTRUCTION THIS PHASE

CONSTRUCTION PREVIOUS PHASE

TEMPORARY ASPHALT 12" TYPE "B"

Ⓐ WK ZN PAV MRK.
NON-REMOV (W) 4" (SLD W/MRKR)

Ⓑ WK ZN PAV MRK.
NON-REMOV (Y) 4" (SLD W/MRKR)

Ⓒ EXIST PAV MRK.

STATE OF TEXAS
HASSAN SAM MOGHADASSI
84231
LICENSED
PROFESSIONAL ENGINEER

H. Moghadassi , P.E. 7/12/11
Signature of Registrant & Date

NOTE:
TACK COAT 0.10 GAL OF RESIDUAL ASPHALT PER SY OF SURFACE AREA

Texas Department of Transportation
© 2011

SH 289
FM455 TO N BUS 289C
TRAFFIC CONTROL PLAN
PHASE I TYPICAL SECTIONS

SCALE: NOT TO SCALE — Sheet 4 of 4

DESIGN	FED.RD. DIV.NO.	FEDERAL AID PROJECT NO.		HIGHWAY NO.
SHM	6	SEE TITLE SHEET		SH 289
GRAPHICS	STATE	DISTRICT	COUNTY	SHEET NO.
OE	TEXAS	DALLAS	COLLIN	
CHECK	CONTROL	SECTION	JOB	47
SHM	0091	03		
CHECK				

P-201107-01

7/11/2011
I:\dal\dgn\sh289\design\sheets\tcp\tcp*typ\289TypX01.dgn
...\tcp\tcp*typ\289TypX01.dgn

TXDOT
100.0000 ft / IN.

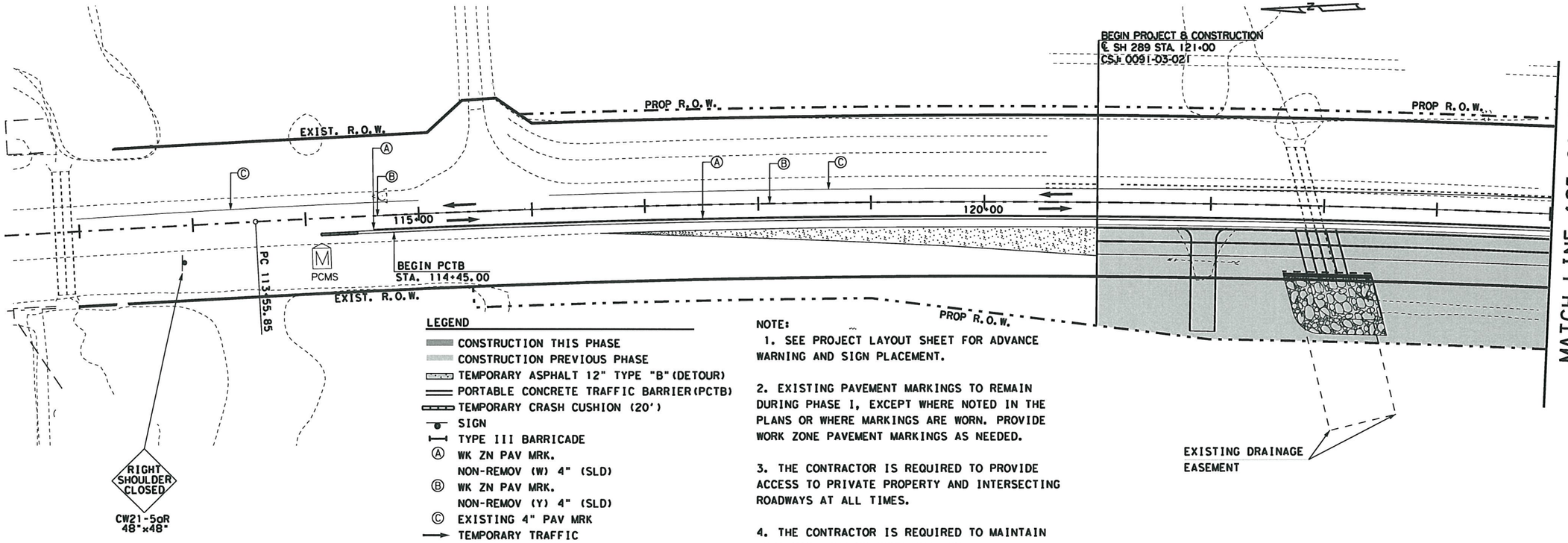

LEGEND

- CONSTRUCTION THIS PHASE
- CONSTRUCTION PREVIOUS PHASE
- TEMPORARY ASPHALT 12" TYPE "B" (DETOUR)
- PORTABLE CONCRETE TRAFFIC BARRIER (PCTB)
- TEMPORARY CRASH CUSHION (20')
- SIGN
- TYPE III BARRICADE
- Ⓐ WK ZN PAV MRK. NON-REMOV (W) 4" (SLD)
- Ⓑ WK ZN PAV MRK. NON-REMOV (Y) 4" (SLD)
- Ⓒ EXISTING 4" PAV MRK
- TEMPORARY TRAFFIC

NOTE:

1. SEE PROJECT LAYOUT SHEET FOR ADVANCE WARNING AND SIGN PLACEMENT.

2. EXISTING PAVEMENT MARKINGS TO REMAIN DURING PHASE I, EXCEPT WHERE NOTED IN THE PLANS OR WHERE MARKINGS ARE WORN. PROVIDE WORK ZONE PAVEMENT MARKINGS AS NEEDED.

3. THE CONTRACTOR IS REQUIRED TO PROVIDE ACCESS TO PRIVATE PROPERTY AND INTERSECTING ROADWAYS AT ALL TIMES.

4. THE CONTRACTOR IS REQUIRED TO MAINTAIN DRAINAGE DURING CONSTRUCTION*

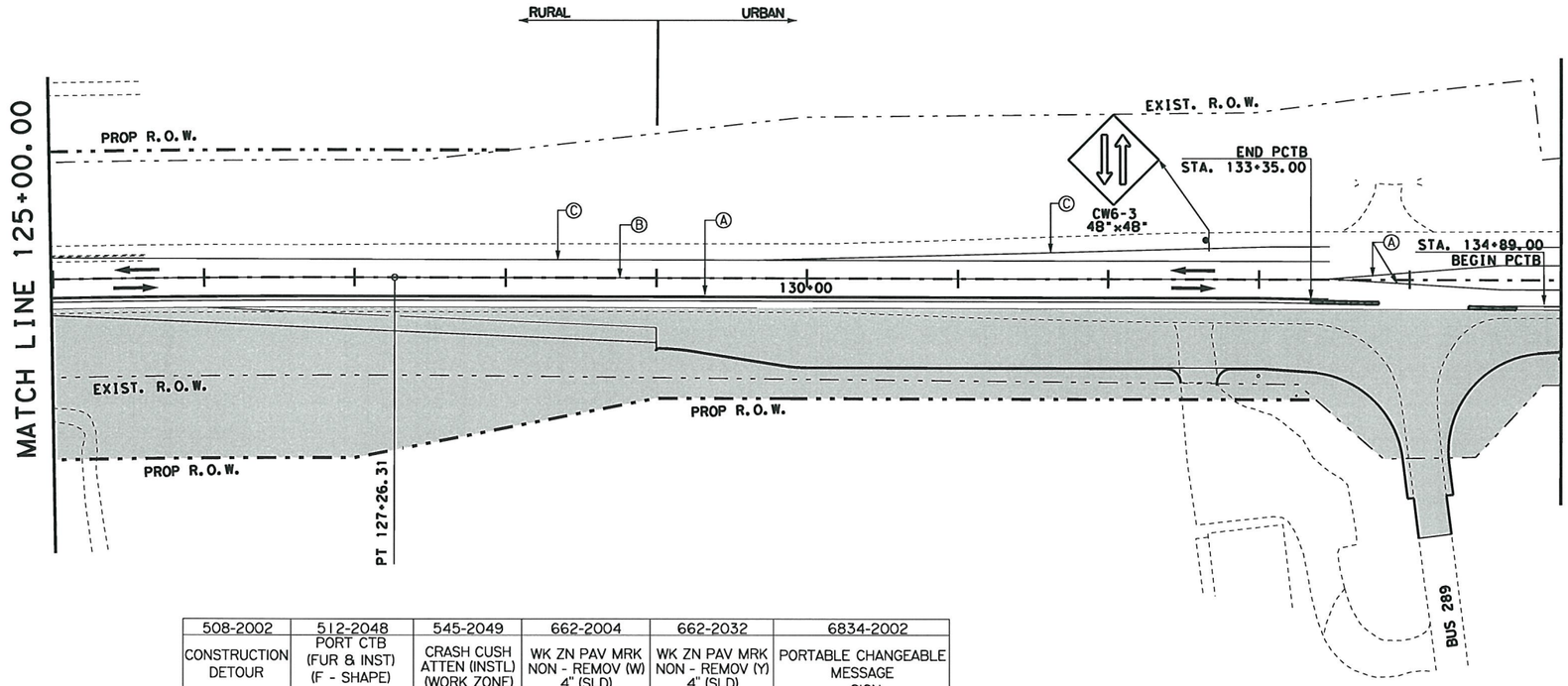

508-2002	512-2048	545-2049	662-2004	662-2032	6834-2002
CONSTRUCTION DETOUR	PORT CTB (FUR & INST) (F - SHAPE) (TY 1)	CRASH CUSH ATTEN (INSTL) (WORK ZONE)	WK ZN PAV MRK NON - REMOV (W) 4" (SLD)	WK ZN PAV MRK NON - REMOV (Y) 4" (SLD)	PORTABLE CHANGEABLE MESSAGE SIGN
SY	LF	EA	LF	LF	LF
1088	1890	3	1900	1900	1

STATE OF TEXAS
HASSAN SAM MOGHADASSI
84231
LICENSED
PROFESSIONAL ENGINEER

H. Moghadassi, P.E. 7/12/11
Signature of Registrant & Date

SH 289 TCP1*1.dgn

Texas Department of Transportation
© 2011

SH 289
FM 455 TO N BUS 289C
TRAFFIC CONTROL PLAN
PHASE I

SCALE: 1"= 100 Sheet 1 of 10

DESIGN	FED. RD. DIV. NO.	PROJECT NO.		HIGHWAY NO.
SHM	6	SEE TITLE SHEET		SH 289
GRAPHICS	STATE	DISTRICT	COUNTY	SHEET NO.
OE	TEXAS	DALLAS	COLLIN	
CHECK	CONTROL	SECTION	JOB	
SM	0091	03		48
CHECK				

P-201107-01

...\tcp\TCP1\SH 289 TCP1*1.dgn

7/11/2011
t:\dal\dgn*s\sh289\design\sheets\tcp\TCP1\SH 289 TCP1*1.dgn

$USER$
$SCALE$

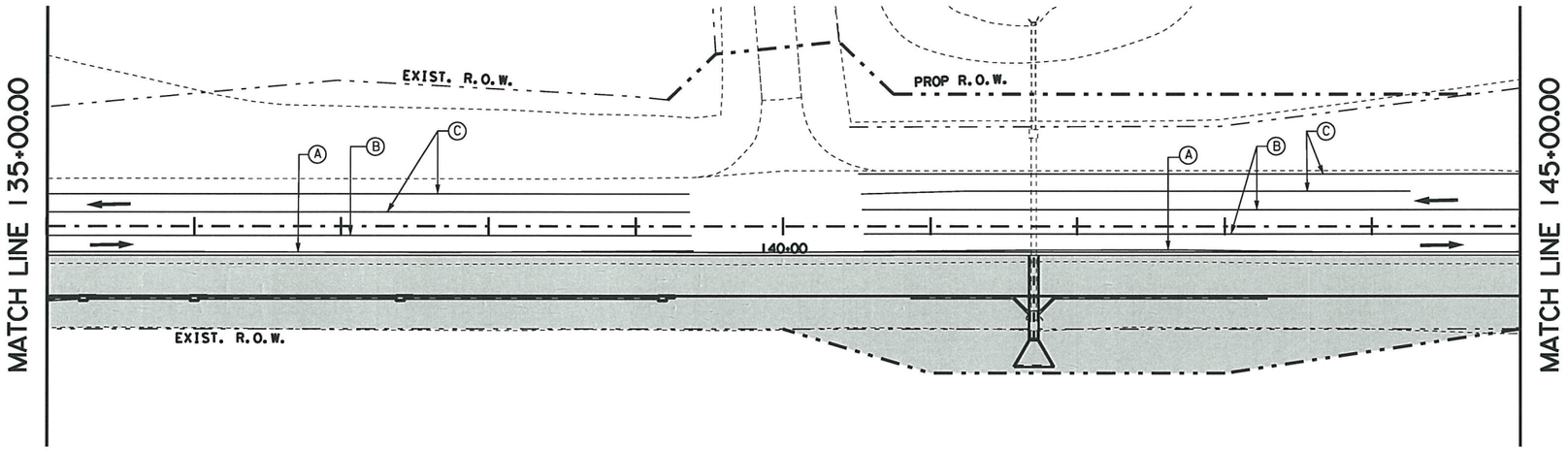

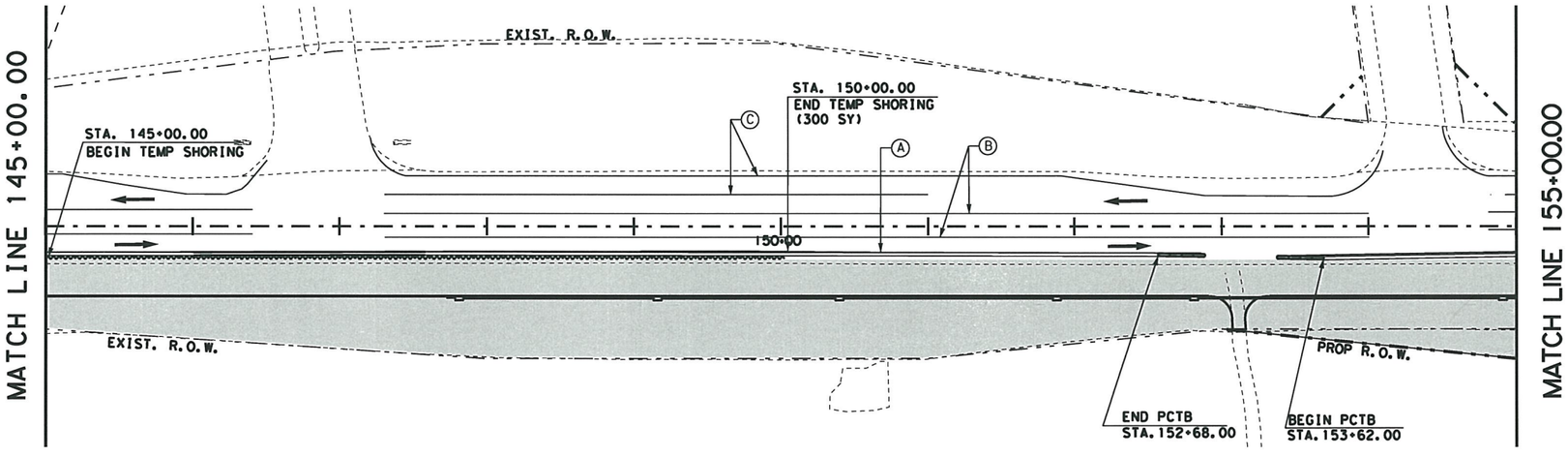

403 2001	512-2048	545-2049	662-2004	662-2032
TEMPORARY SPL SHORING	PORT CTB (FUR & INST) (F - SHAPE) (TY 1)	CRASH CUSH ATTEN (INSTL) (WORK ZONE)	WK ZN PAV MRK NON - REMOV (W) 4" (SLD)	WK ZN PAV MRK NON - REMOV (Y) 4" (SLD)
SF	LF	EA	LF	LF
1500	1590	2	1980	3430

LEGEND

- CONSTRUCTION THIS PHASE
- CONSTRUCTION PREVIOUS PHASE
- TEMPORARY ASPHALT 12" TYPE "B" (DETOUR)
- PORTABLE CONCRETE TRAFFIC BARRIER (PCTB)
- TEMPORARY CRASH CUSHION (20')
- SIGN
- TYPE III BARRICADE
- (A) WK ZN PAV MRK. NON-REMOV (W) 4" (SLD)
- (B) WK ZN PAV MRK. NON-REMOV (Y) 4" (SLD)
- (C) EXISTING 4" PAV MRK
- TEMPORARY SHORING
- TEMPORARY TRAFFIC

NOTE:

1. SEE PROJECT LAYOUT SHEET FOR ADVANCE WARNING AND SIGN PLACEMENT.

2. EXISTING PAVEMENT MARKINGS TO REMAIN DURING PHASE I, EXCEPT WHERE NOTED IN THE PLANS OR WHERE MARKINGS ARE WORN. PROVIDE WORK ZONE PAVEMENT MARKINGS AS NEEDED.

3. THE CONTRACTOR IS REQUIRED TO PROVIDE ACCESS TO PRIVATE PROPERTY AND INTERSECTING ROADWAYS AT ALL TIMES.

4. THE CONTRACTOR IS REQUIRED TO MAINTAIN DRAINAGE DURING CONSTRUCTION.

STATE OF TEXAS
HASSAN SAM MOGHADASSI
84231
LICENSED
PROFESSIONAL ENGINEER

H. Moghadassi, P.E. 12/29/11
Signature of Registrant & Date

$FILES$

Texas Department of Transportation
© 2011

SH 289
FM 455 TO N BUS 289C
TRAFFIC CONTROL PLAN
PHASE I

SCALE: 1"= 100 Sheet 2 of 10

DESIGN	FED. RD. DIV. NO.	PROJECT NO.		HIGHWAY NO.
SHM	6	SEE TITLE SHEET		SH 289
GRAPHICS	STATE	DISTRICT	COUNTY	SHEET NO.
OE	TEXAS	DALLAS	COLLIN	
CHECK	CONTROL	SECTION	JOB	49
SM	0091	03	P-201107-01	
CHECK				

$FILEABBREV$

12/29/2011
T:\DALDGN*S\SH289\Design\sheets\TCP\TCP1\SH 289 TCP1*2.dgn

TXDOT
100.0000 ft / IN.

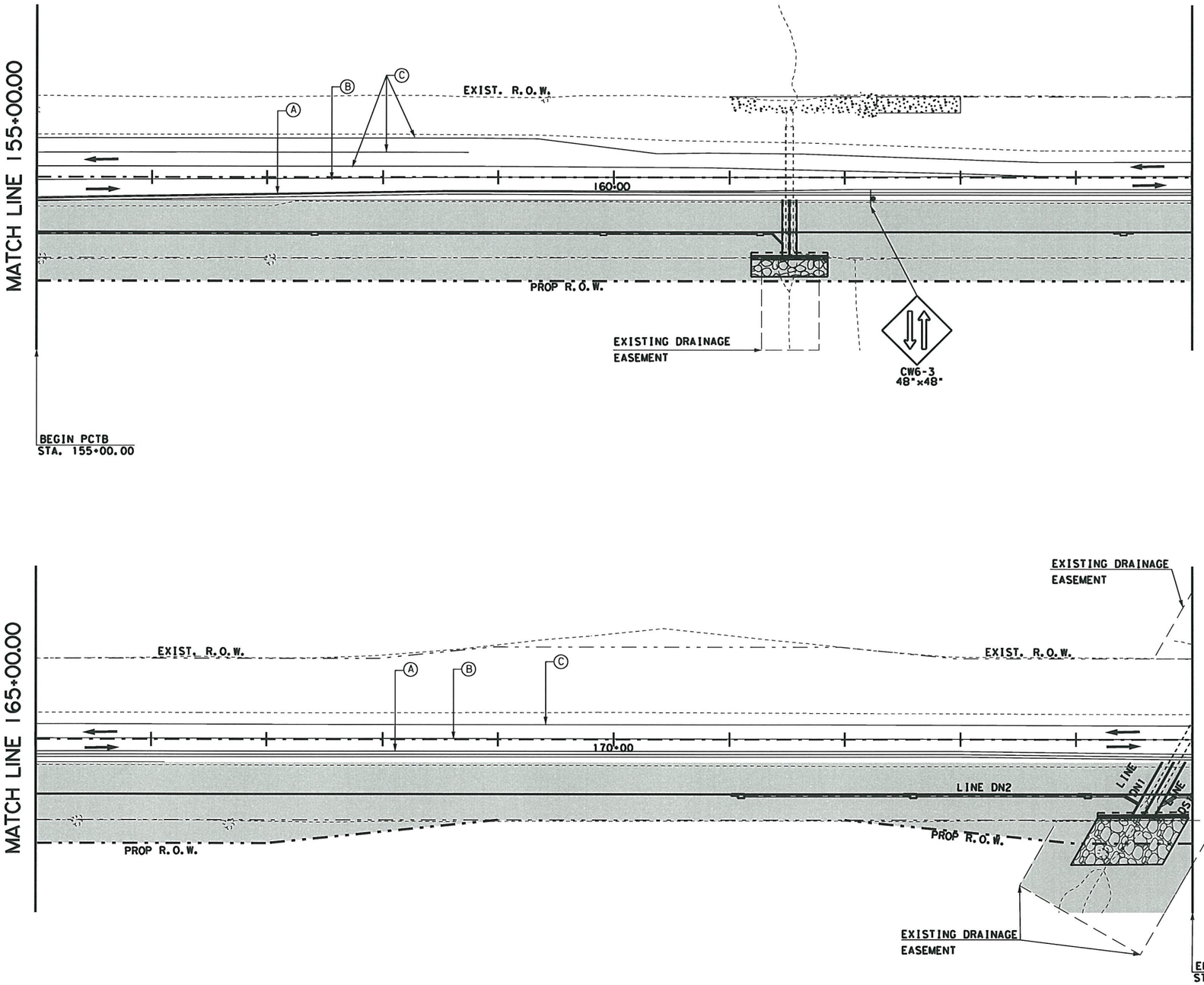

LEGEND

- CONSTRUCTION THIS PHASE
- CONSTRUCTION PREVIOUS PHASE
- TEMPORARY ASPHALT 12" TYPE "B"
- PORTABLE CONCRETE TRAFFIC BARRIER (PCTB)
- TEMPORARY CRASH CUSHION (20')
- SIGN
- TYPE III BARRICADE
- (A) WK ZN PAV MRK. NON-REMOV (W) 4" (SLD W/MRKR)
- (B) WK ZN PAV MRK. NON-REMOV (Y) 4" (SLD W/MRKR)
- (C) EXISTING 4" PAV MRK
- TEMPORARY TRAFFIC

NOTE:

1. SEE PROJECT LAYOUT SHEET FOR ADVANCE WARNING AND SIGN PLACEMENT.

2. EXISTING PAVEMENT MARKINGS TO REMAIN DURING PHASE I, EXCEPT WHERE NOTED IN THE PLANS OR WHERE MARKINGS ARE WORN. PROVIDE WORK ZONE PAVEMENT MARKINGS AS NEEDED.

3. THE CONTRACTOR IS REQUIRED TO PROVIDE ACCESS TO PRIVATE PROPERTY AND INTERSECTING ROADWAYS AT ALL TIMES.

4. THE CONTRACTOR IS REQUIRED TO MAINTAIN DRAINAGE DURING CONSTRUCTION.

512-2048	545-2049	662-2004	662-2032
PORT CTB (FUR & INST) (F - SHAPE) (TY 1)	CRASH CUSH ATTEN (INSTL) (WORK ZONE)	WK ZN PAV MRK NON - REMOV (W) 4" (SLD)	WK ZN PAV MRK NON - REMOV (Y) 4" (SLD)
LF	EA	LF	LF
2010	0	2000	2000

STATE OF TEXAS
HASSAN SAM MOGHADASSI
84231
LICENSED
PROFESSIONAL ENGINEER

H. Moghadassi, P.E. 7/12/11
Signature of Registrant & Date

SH 289 TCP1*3.dgn

Texas Department of Transportation
© 2011

SH 289
FM 455 TO N BUS 289C
TRAFFIC CONTROL PLAN
PHASE I

SCALE: 1"= 100 Sheet 3 of 10

DESIGN	FED.RD. DIV.NO.	PROJECT NO.		HIGHWAY NO.
SHM	6	SEE TITLE SHEET		SH 289
GRAPHICS OE	STATE	DISTRICT	COUNTY	SHEET NO.
CHECK SM	TEXAS	DALLAS	COLLIN	50
CHECK	CONTROL	SECTION	JOB	
	0091	03	P-201107-01	

...\tcp\TCP1\SH 289 TCP1*3.dgn

7/11/2011
I:\dal\dgn*s\sh289\design\sheets\tcp\TCP1\SH 289 TCP1*3.dgn

TXDOT
100.0000 ft / IN.

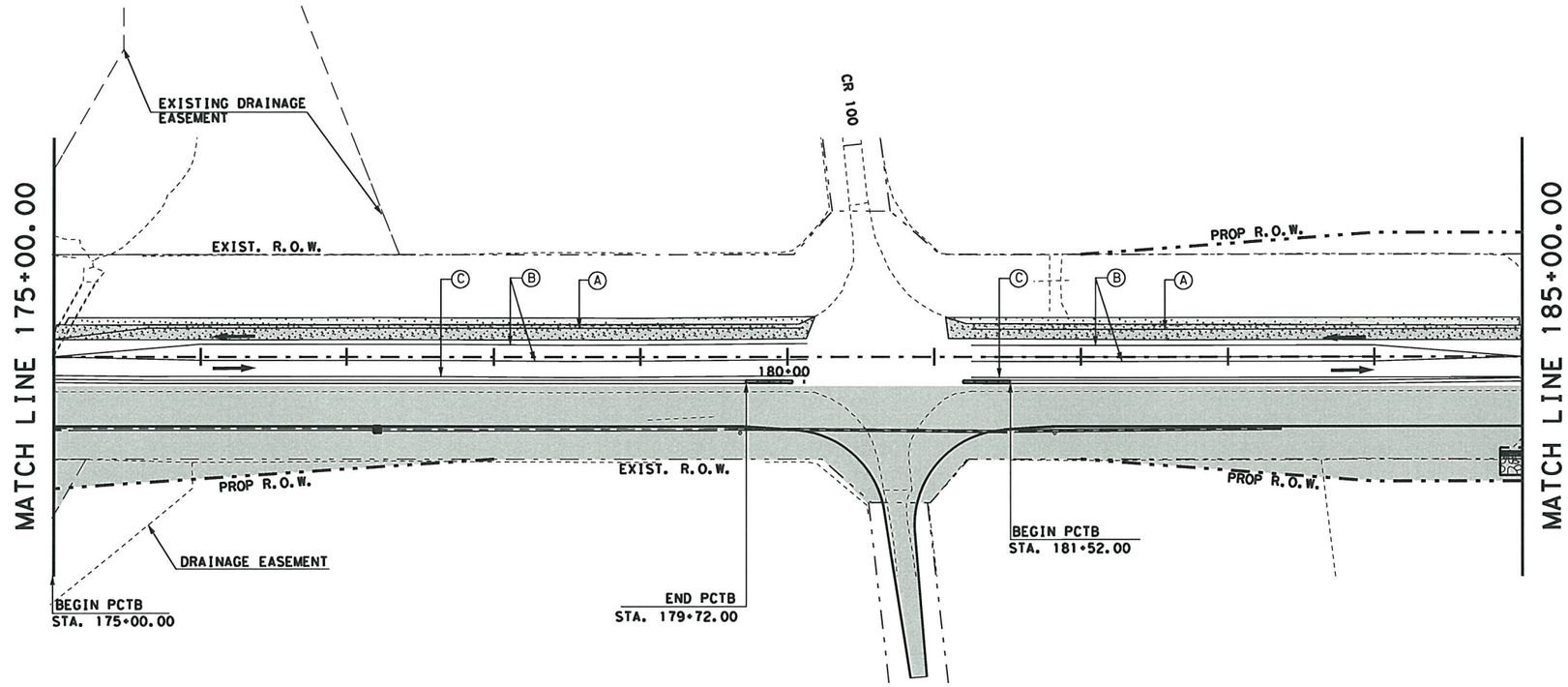

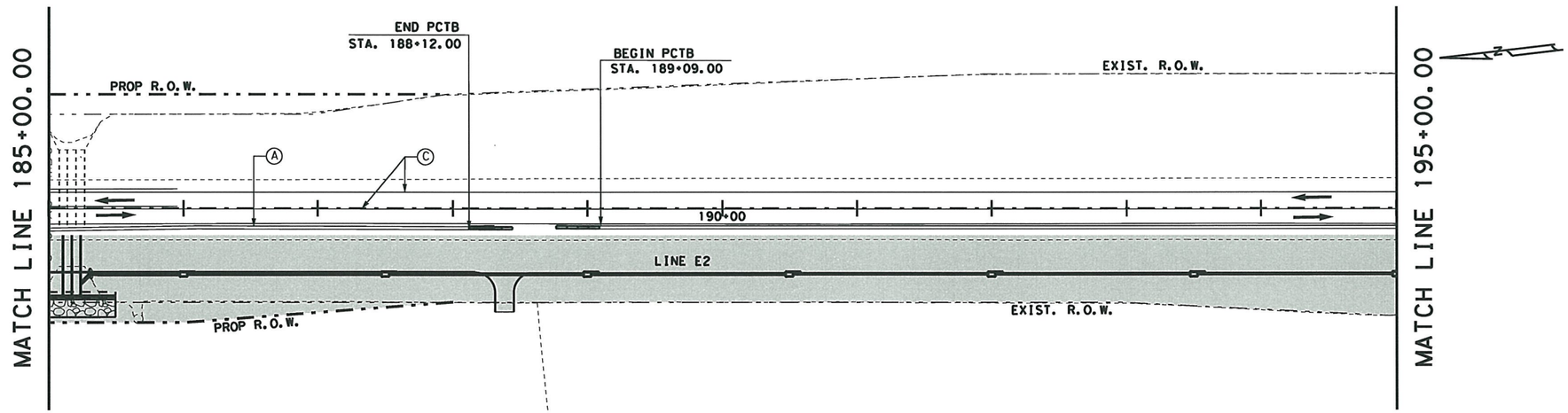

LEGEND

- CONSTRUCTION THIS PHASE
- CONSTRUCTION PREVIOUS PHASE
- TEMPORARY ASPHALT 12" TYPE "B" (DETOUR)
- PORTABLE CONCRETE TRAFFIC BARRIER (PCTB)
- TEMPORARY CRASH CUSHION (20')
- SIGN
- TYPE III BARRICADE
- (A) WK ZN PAV MRK. NON-REMOV (W) 4" (SLD W/MRKR)
- (B) WK ZN PAV MRK. NON-REMOV (Y) 4" (SLD W/MRKR)
- (C) EXISTING 4" PAV MRK
- TEMPORARY TRAFFIC

NOTE:
1. SEE PROJECT LAYOUT SHEET FOR ADVANCE WARNING AND SIGN PLACEMENT.

2. EXISTING PAVEMENT MARKINGS TO REMAIN DURING PHASE I, EXCEPT WHERE NOTED IN THE PLANS OR WHERE MARKINGS ARE WORN. PROVIDE WORK ZONE PAVEMENT MARKINGS AS NEEDED.

3. THE CONTRACTOR IS REQUIRED TO PROVIDE ACCESS TO PRIVATE PROPERTY AND INTERSECTING ROADWAYS AT ALL TIMES.

4. THE CONTRACTOR IS REQUIRED TO MAINTAIN DRAINAGE DURING CONSTRUCTION

508-2002	512-2048	545-2049	662-2004	662-2032
CONSTRUCTING DETOURS	PORT CTB (FUR & INST) (F - SHAPE) (TY 1)	CRASH CUSH ATTEN (INSTL) (WORK ZONE)	WK ZN PAV MRK NON - REMOV (W) 4" (SLD)	WK ZN PAV MRK NON - REMOV (Y) 4" (SLD)
SY	LF	EA	LF	LF
1503.40	1710	4	1890	1780

STATE OF TEXAS
HASSAN SAM MOGHADASSI
84231
LICENSED PROFESSIONAL ENGINEER

H. Moghadassi , P.E. 7/12/11
Signature of Registrant & Date

SH 289 TCP1*4.dgn

Texas Department of Transportation
© 2011

SH 289
FM 455 TO N BUS 289C
TRAFFIC CONTROL PLAN
PHASE I

SCALE: 1"= 100 Sheet 4 of 10

DESIGN	FED.RD. DIV.NO.	PROJECT NO.		HIGHWAY NO.
SHM	6	SEE TITLE SHEET		SH 289
GRAPHICS OE	STATE	DISTRICT	COUNTY	SHEET NO.
CHECK SM	TEXAS	DALLAS	COLLIN	51
CHECK	CONTROL	SECTION	JOB	
	0091	03	P-201107-01	

7/11/2011
t:\dal\dgn*s\sh289\design\sheets\tcp\TCP1\SH 289 TCP1*4.dgn
...\tcp\TCP1\SH 289 TCP1*4.dgn

TXDOT
100.0000 ft / IN.

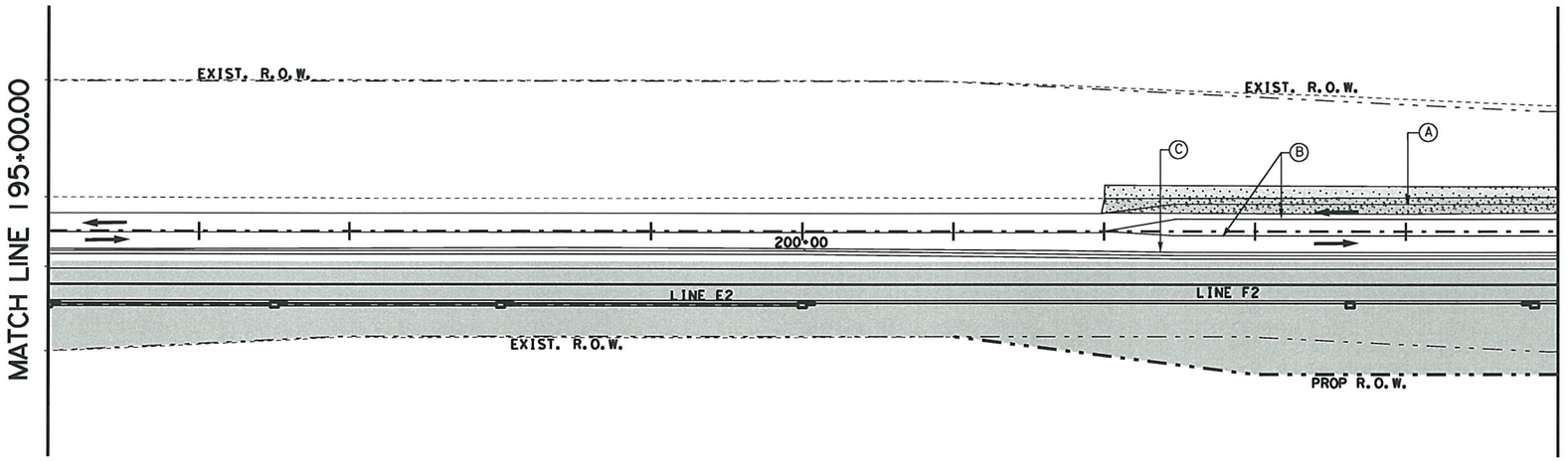

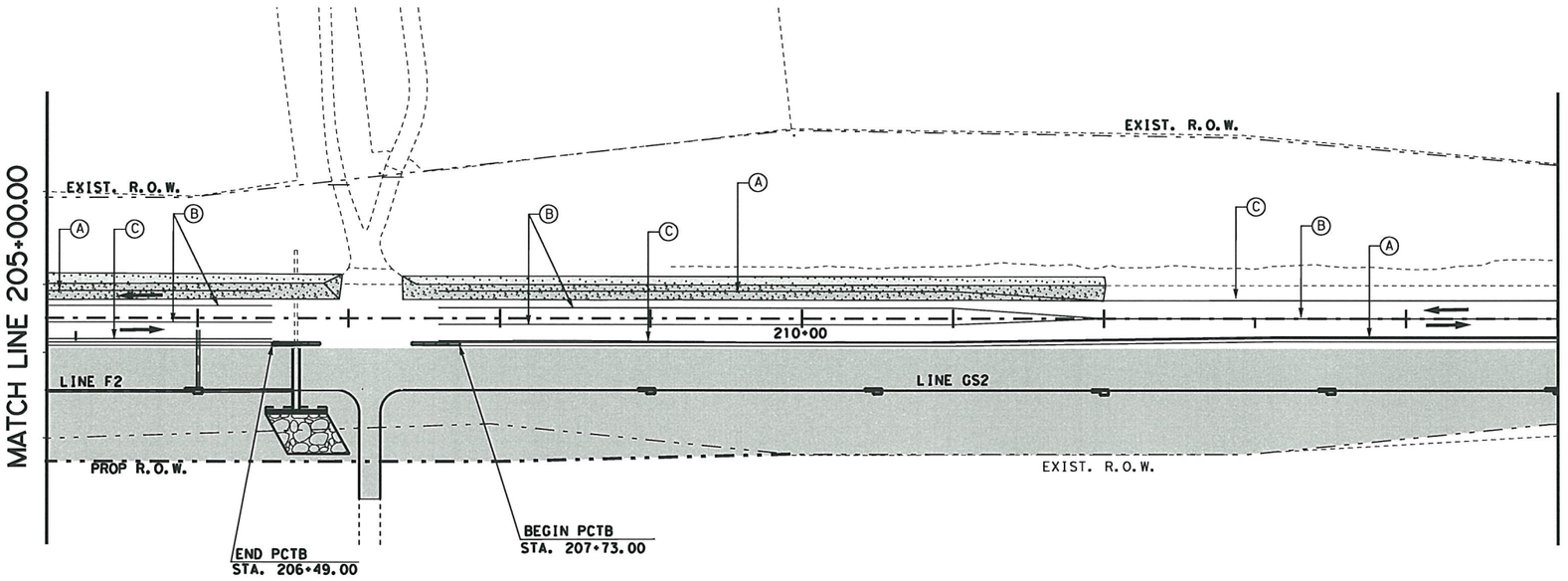

LEGEND

- CONSTRUCTION THIS PHASE
- CONSTRUCTION PREVIOUS PHASE
- TEMPORARY ASPHALT 12" TYPE "B" (DETOUR)
- PORTABLE CONCRETE TRAFFIC BARRIER (PCTB)
- TEMPORARY CRASH CUSHION (20')
- SIGN
- TYPE III BARRICADE
- (A) WK ZN PAV MRK, NON-REMOV (W) 4" (SLD W/MRKR)
- (B) WK ZN PAV MRK, NON-REMOV (Y) 4" (SLD W/MRKR)
- (C) EXISTING 4" PAV MRK
- TEMPORARY TRAFFIC

NOTE:

1. SEE PROJECT LAYOUT SHEET FOR ADVANCE WARNING AND SIGN PLACEMENT.

2. EXISTING PAVEMENT MARKINGS TO REMAIN DURING PHASE I, EXCEPT WHERE NOTED IN THE PLANS OR WHERE MARKINGS ARE WORN. PROVIDE WORK ZONE PAVEMENT MARKINGS AS NEEDED.

3. THE CONTRACTOR IS REQUIRED TO PROVIDE ACCESS TO PRIVATE PROPERTY AND INTERSECTING ROADWAYS AT ALL TIMES.

4. THE CONTRACTOR IS REQUIRED TO MAINTAIN DRAINAGE DURING CONSTRUCTION.

508-2002	512-2048	545-2049	662-2004	662-2032
CONSTRUCTING DETOURS	PORT CTB (FUR & INST) (F - SHAPE) (TY 1)	CRASH CUSH ATTEN (INSTL) (WORK ZONE)	WK ZN PAV MRK NON - REMOV (W) 4" (SLD)	WK ZN PAV MRK NON - REMOV (Y) 4" (SLD)
SY	LF	EA	LF	LF
905.60	1890	2	1890	2780

STATE OF TEXAS
HASSAN SAM MOGHADASSI
84231
LICENSED
PROFESSIONAL ENGINEER

H. Moghadassi, P.E. 7/12/11
Signature of Registrant & Date

SH 289 TCP1*5.dgn

Texas Department of Transportation
© 2011

SH 289
FM 455 TO N BUS 289C
TRAFFIC CONTROL PLAN
PHASE I

SCALE: 1"= 100 Sheet 5 of 10

DESIGN	FED. RD. DIV. NO.	PROJECT NO.		HIGHWAY NO.
SHM	6	SEE TITLE SHEET		SH 289
GRAPHICS	STATE	DISTRICT	COUNTY	SHEET NO.
OE	TEXAS	DALLAS	COLLIN	52
CHECK	CONTROL	SECTION	JOB	
SM	0091	03	P-201107-01	
CHECK				

7/11/2011
I:\dal\dgn\s\sh289\design\sheets\tcp\TCP1\SH 289 TCP1*5.dgn
...\tcp\TCP1\SH 289 TCP1*5.dgn

$USER$
$SCALE$

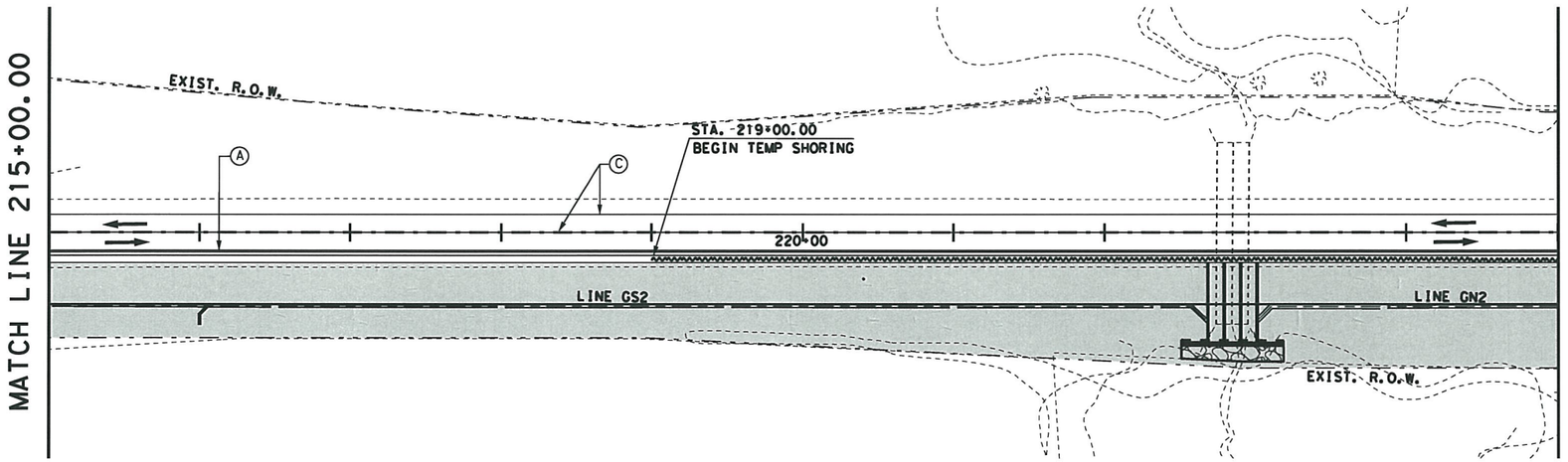

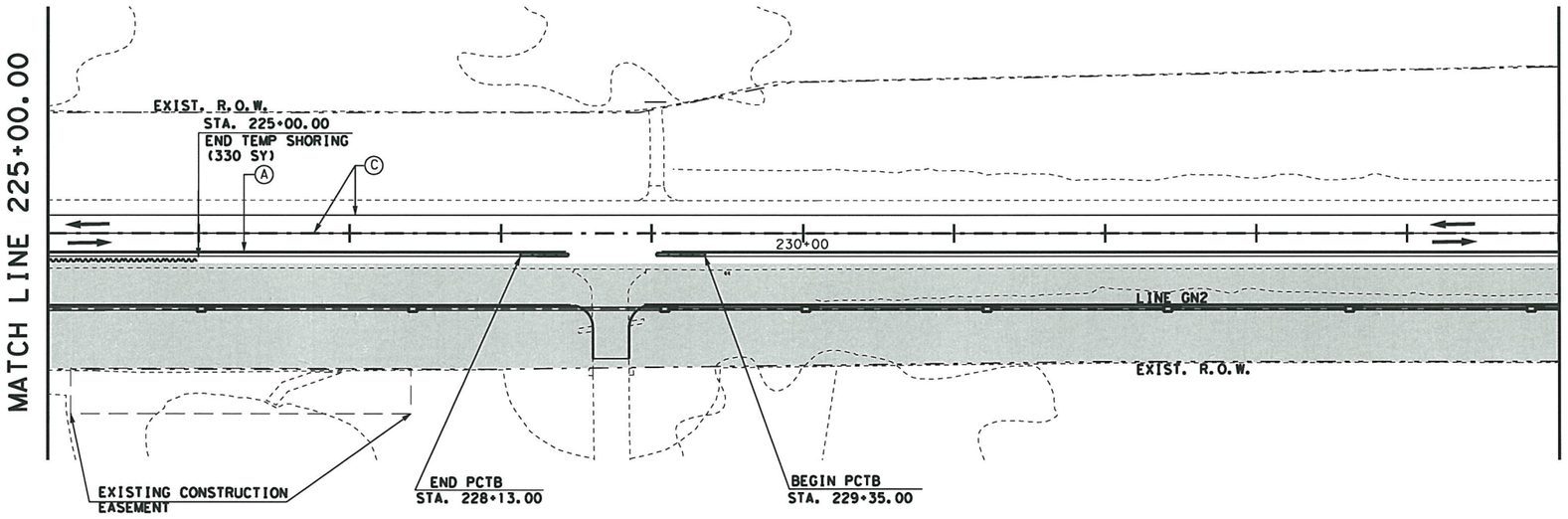

403-2001	512-2048	545-2049	662-2004
TEMPORARY SPL SHORING	PORT CTB (FUR & INST) (F - SHAPE) (TY 1)	CRASH CUSH ATTEN (INSTL) (WORK ZONE)	WK ZN PAV MRK NON - REMOV (W) 4" (SLD)
SF	LF	EA	LF
3300	1860	2	1920

LEGEND

- CONSTRUCTION THIS PHASE
- CONSTRUCTION PREVIOUS PHASE
- TEMPORARY ASPHALT 12" TYPE "B"
- PORTABLE CONCRETE TRAFFIC BARRIER (PCTB)
- TEMPORARY CRASH CUSHION (20')
- SIGN
- TYPE III BARRICADE
- Ⓐ WK ZN PAV MRK. NON-REMOV (W) 4" (SLD W/MRKR)
- Ⓑ WK ZN PAV MRK. NON-REMOV (Y) 4" (SLD W/MRKR)
- Ⓒ EXISTING 4" PAV MRK
- TEMPORARY SHORING
- TEMPORARY TRAFFIC

NOTE:

1. SEE PROJECT LAYOUT SHEET FOR ADVANCE WARNING AND SIGN PLACEMENT.

2. EXISTING PAVEMENT MARKINGS TO REMAIN DURING PHASE I, EXCEPT WHERE NOTED IN THE PLANS OR WHERE MARKINGS ARE WORN. PROVIDE WORK ZONE PAVEMENT MARKINGS AS NEEDED.

3. THE CONTRACTOR IS REQUIRED TO PROVIDE ACCESS TO PRIVATE PROPERTY AND INTERSECTING ROADWAYS AT ALL TIMES.

4. THE CONTRACTOR IS REQUIRED TO MAINTAIN DRAINAGE DURING CONSTRUCTION.

STATE OF TEXAS
HASSAN SAM MOGHADASSI
84231
LICENSED PROFESSIONAL ENGINEER

H.S.Moghadassi, P.E. 12/29/11
Signature of Registrant & Date

$FILES$

Texas Department of Transportation
© 2011

SH 289
FM 455 TO N BUS 289C
TRAFFIC CONTROL PLAN
PHASE I

SCALE: 1"= 100 Sheet 6 of 10

DESIGN	FED.RD. DIV.NO.	PROJECT NO.		HIGHWAY NO.
SHM	6	SEE TITLE SHEET		SH 289
GRAPHICS OE	STATE	DISTRICT	COUNTY	SHEET NO.
CHECK SM	TEXAS	DALLAS	COLLIN	53
CHECK	CONTROL	SECTION	JOB	
	0091	03	201107-01	

P-201107-01

$FILEABBREV$

12/29/2011
T:\DALDGN*S\SH289\Design\sheets\TCP\TCP1\SH 289 TCP1*6.dgn

TXDOT
100.0000 ft / IN.

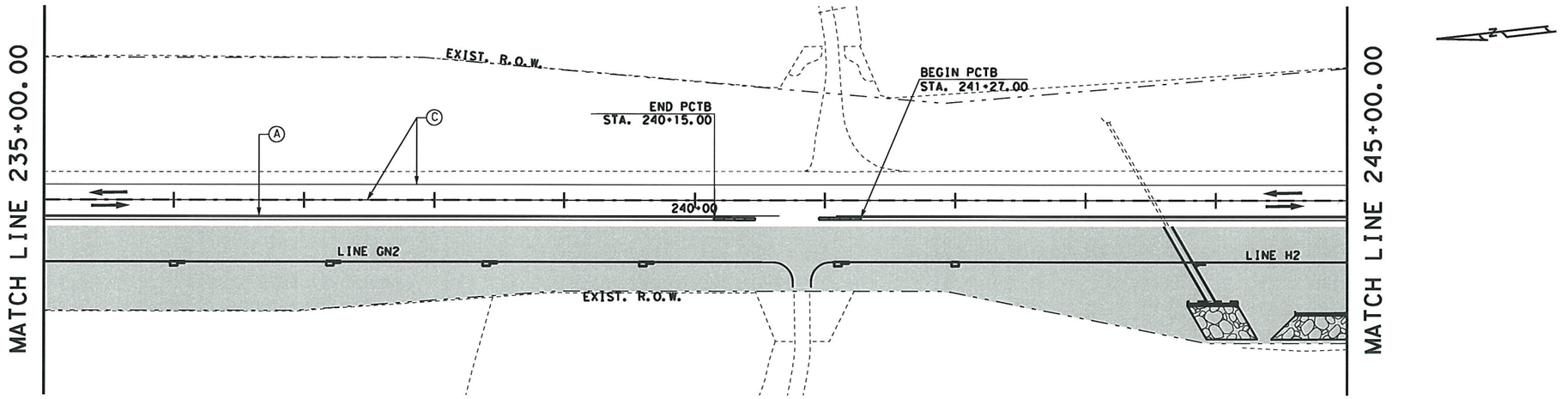

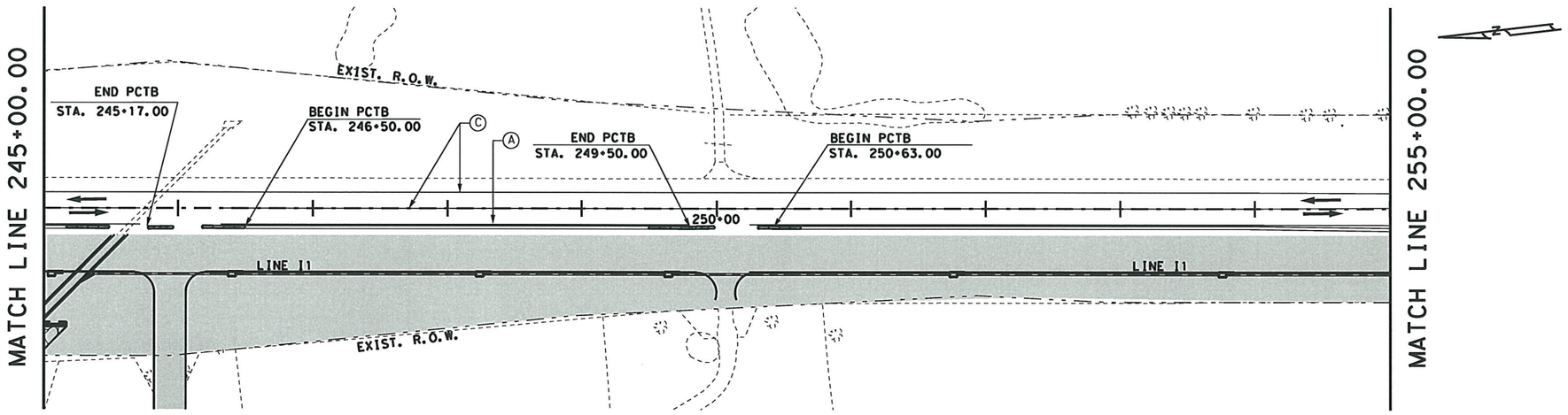

LEGEND

- CONSTRUCTION THIS PHASE
- CONSTRUCTION PREVIOUS PHASE
- TEMPORARY ASPHALT 12" TYPE "B"
- PORTABLE CONCRETE TRAFFIC BARRIER (PCTB)
- TEMPORARY CRASH CUSHION (20')
- SIGN
- TYPE III BARRICADE
- (A) WK ZN PAV MRK. NON-REMOV (W) 4" (SLD W/MRKR)
- (B) WK ZN PAV MRK. NON-REMOV (Y) 4" (SLD W/MRKR)
- (C) EXISTING 4" PAV MRK
- TEMPORARY TRAFFIC

NOTE:

1. SEE PROJECT LAYOUT SHEET FOR ADVANCE WARNING AND SIGN PLACEMENT.

2. EXISTING PAVEMENT MARKINGS TO REMAIN DURING PHASE I, EXCEPT WHERE NOTED IN THE PLANS OR WHERE MARKINGS ARE WORN. PROVIDE WORK ZONE PAVEMENT MARKINGS AS NEEDED.

3. THE CONTRACTOR IS REQUIRED TO PROVIDE ACCESS TO PRIVATE PROPERTY AND INTERSECTING ROADWAYS AT ALL TIMES.

4. THE CONTRACTOR IS REQUIRED TO MAINTAIN DRAINAGE DURING CONSTRUCTION.

512-2001	512-2048	662-2004
PORT CTB (FUR & INST) (SAFETY SH) (TY 1)	PORT CTB (FUR & INST) (F - SHAPE) (TY 1)	WK ZN PAV MRK NON - REMOV (W) 4" (SLD)
LF	EA	LF
1650	6	1870

STATE OF TEXAS
HASSAN SAM MOGHADASSI
84231
LICENSED PROFESSIONAL ENGINEER

H. Moghadassi, P.E. 7/12/11
Signature of Registrant & Date

SH 289 TCP1*7.dgn

Texas Department of Transportation
© 2011

SH 289
FM 455 TO N BUS 289C
TRAFFIC CONTROL PLAN
PHASE I

SCALE: 1"= 100 Sheet 7 of 10

DESIGN	FED. RD. DIV. NO.	PROJECT NO.		HIGHWAY NO.
SHM	6	SEE TITLE SHEET		SH 289
GRAPHICS	STATE	DISTRICT	COUNTY	SHEET NO.
OE	TEXAS	DALLAS	COLLIN	54
CHECK	CONTROL	SECTION	JOB	
SM	0091	03	P-201107-01	
CHECK				

...\tcp\TCP1\SH 289 TCP1*7.dgn

7/11/2011
t:\dal\dgn*s\sh289\design\sheets\tcp\TCP1\SH 289 TCP1*7.dgn

TXDOT
100.0000 ft / IN.

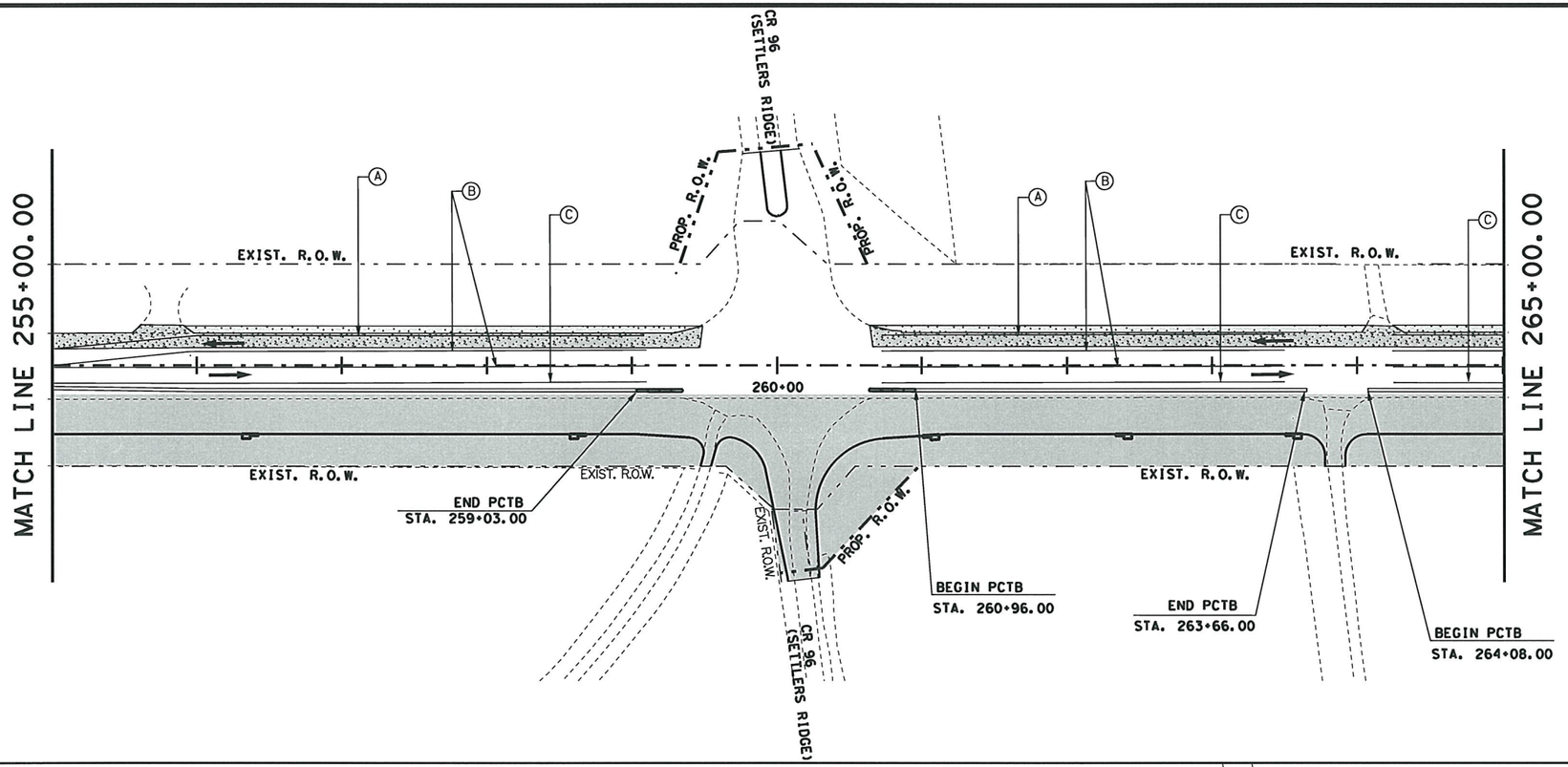

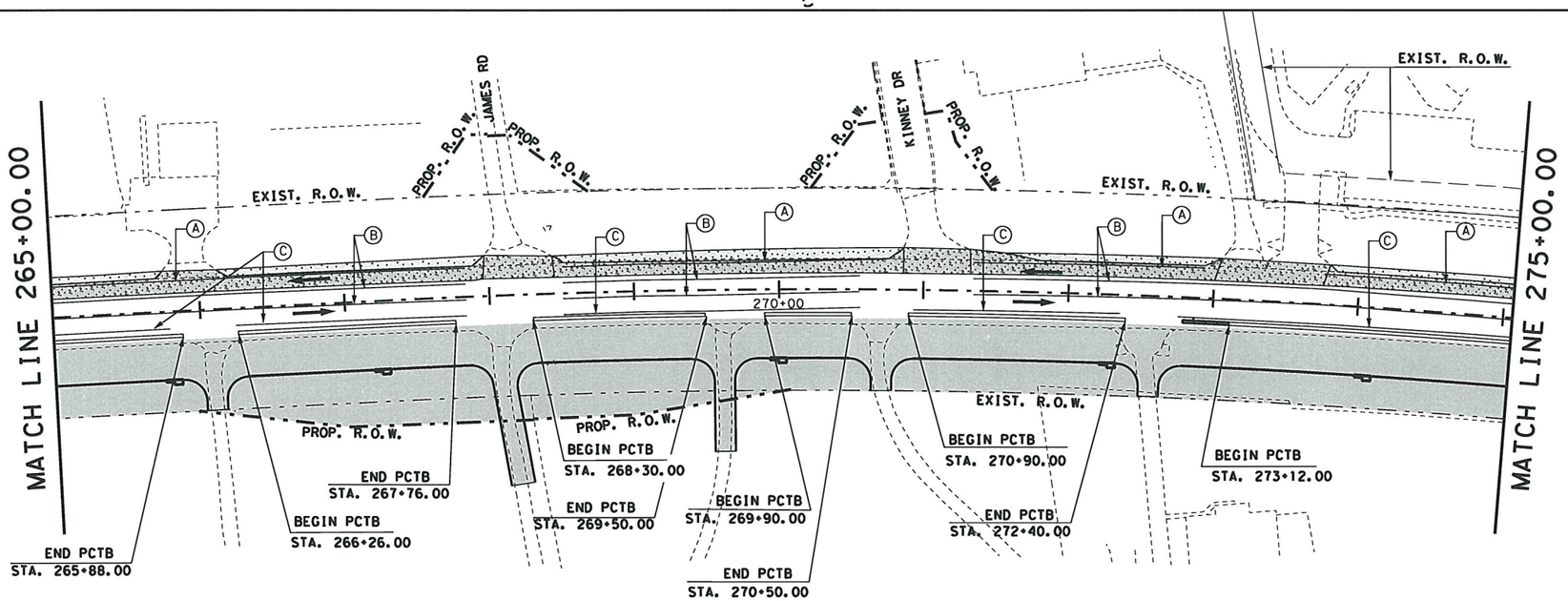

LEGEND

- CONSTRUCTION THIS PHASE
- CONSTRUCTION PREVIOUS PHASE
- TEMPORARY ASPHALT 12" TYPE "B"
- PORTABLE CONCRETE TRAFFIC BARRIER (PCTB)
- TEMPORARY CRASH CUSHION (20')
- SIGN
- TYPE III BARRICADE
- (A) WK ZN PAV MRK. NON-REMOV (W) 4" (SLD W/MRKR)
- (B) WK ZN PAV MRK. NON-REMOV (Y) 4" (SLD W/MRKR)
- (C) EXISTING 4" PAV MRK
- TEMPORARY TRAFFIC

NOTE:

1. SEE PROJECT LAYOUT SHEET FOR ADVANCE WARNING AND SIGN PLACEMENT.

2. EXISTING PAVEMENT MARKINGS TO REMAIN DURING PHASE I, EXCEPT WHERE NOTED IN THE PLANS OR WHERE MARKINGS ARE WORN. PROVIDE WORK ZONE PAVEMENT MARKINGS AS NEEDED.

3. THE CONTRACTOR IS REQUIRED TO PROVIDE ACCESS TO PRIVATE PROPERTY AND INTERSECTING ROADWAYS AT ALL TIMES.

4. THE CONTRACTOR IS REQUIRED TO MAINTAIN DRAINAGE DURING CONSTRUCTION.

508-2002	512-2048	545-2049	662-2004	662-2032
CONSTRUCTING DETOURS	PORT CTB (FUR & INST) (F - SHAPE) (TY 1)	CRASH CUSH ATTEN (INSTL) (WORK ZONE)	WK ZN PAV MRK NON - REMOV (W) 4" (SLD)	WK ZN PAV MRK NON - REMOV (Y) 4" (SLD)
SY	LF	EA	LF	LF
3457	1500	3	1565	3240

STATE OF TEXAS
HASSAN SAM MOGHADASSI
84231
LICENSED
PROFESSIONAL ENGINEER

H. Moghadassi, P.E. 7/12/11
Signature of Registrant & Date

SH 289 TCP1*8.dgn

Texas Department of Transportation
© 2011

SH 289
FM 455 TO N BUS 289C
TRAFFIC CONTROL PLAN
PHASE I

SCALE: 1"= 100 Sheet 8 of 10

DESIGN	FED.RD. DIV.NO.	PROJECT NO.		HIGHWAY NO.
SHM	6	SEE TITLE SHEET		SH 289
GRAPHICS OE	STATE	DISTRICT	COUNTY	SHEET NO.
CHECK SM	TEXAS	DALLAS	COLLIN	55
CHECK	CONTROL	SECTION	JOB	
	0091	03	P-201107-01	

...\tcp\TCP1\SH 289 TCP1*8.dgn

7/11/2011
I:\dalgn*s\sh289\design\sheets\tcp\TCP1\SH 289 TCP1*8.dgn

$USER$
$SCALE$

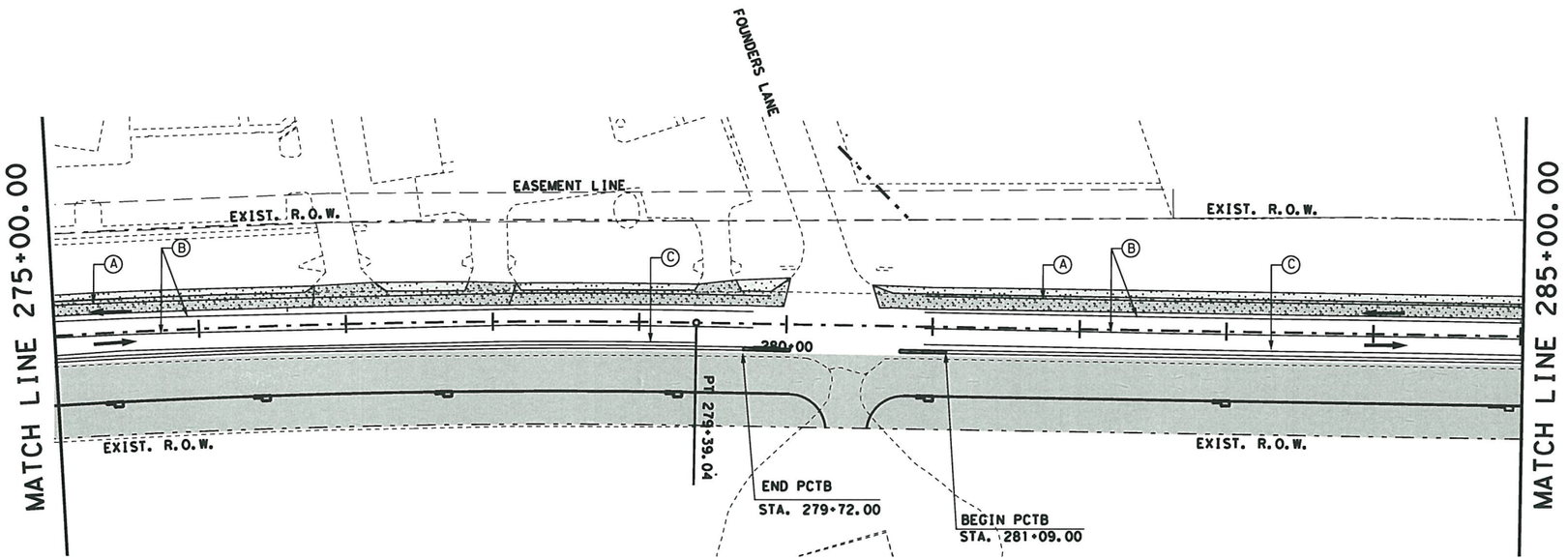

LEGEND

- CONSTRUCTION THIS PHASE
- CONSTRUCTION PREVIOUS PHASE
- TEMPORARY ASPHALT 12" TYPE "B"
- PORTABLE CONCRETE TRAFFIC BARRIER (PCTB)
- TEMPORARY CRASH CUSHION (20')
- SIGN
- TYPE III BARRICADE
- (A) WK ZN PAV MRK. NON-REMOV (W) 4" (SLD W/MRKR)
- (B) WK ZN PAV MRK. NON-REMOV (Y) 4" (SLD W/MRKR)
- (C) EXISTING 4" PAV MRK
- TEMPORAY SHORING
- TEMPORARY TRAFFIC

NOTE:

1. SEE PROJECT LAYOUT SHEET FOR ADVANCE WARNING AND SIGN PLACEMENT.

2. EXISTING PAVEMENT MARKINGS TO REMAIN DURING PHASE I, EXCEPT WHERE NOTED IN THE PLANS OR WHERE MARKINGS ARE WORN. PROVIDE WORK ZONE PAVEMENT MARKINGS AS NEEDED.

3. THE CONTRACTOR IS REQUIRED TO PROVIDE ACCESS TO PRIVATE PROPERTY AND INTERSECTING ROADWAYS AT ALL TIMES.

4. THE CONTRACTOR IS REQUIRED TO MAINTAIN DRAINAGE DURING CONSTRUCTION.

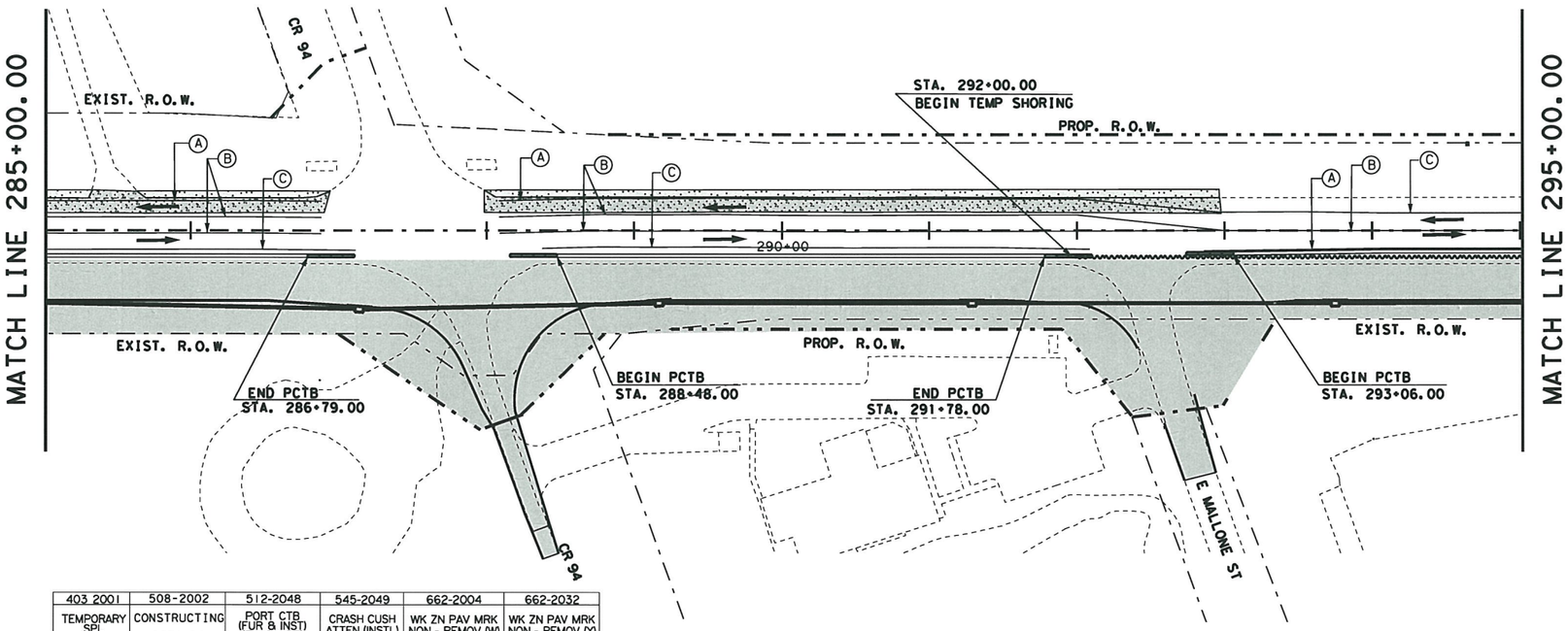

403 2001	508-2002	512-2048	545-2049	662-2004	662-2032
TEMPORARY SPL SHORING	CONSTRUCTING DETOURS	PORT CTB (FUR & INST) (F - SHAPE) (TY 1)	CRASH CUSH ATTEN (INSTL) (WORK ZONE)	WK ZN PAV MRK NON - REMOV (W) 4" (SLD)	WK ZN PAV MRK NON - REMOV (Y) 4" (SLD)
SF	SY	LF	EA	LF	LF
3500	2466	1590	6	1780	3330

STATE OF TEXAS
HASSAN SAM MOGHADASSI
84231
LICENSED
PROFESSIONAL ENGINEER

H. Moghadassi, P.E. 12/29/11
Signature of Registrant & Date

$FILES$

Texas Department of Transportation
© 2011

SH 289
FM 455 TO N BUS 289C
TRAFFIC CONTROL PLAN
PHASE I

SCALE: 1"= 100 Sheet 9 of 10

DESIGN	FED.RD. DIV.NO.	PROJECT NO.		HIGHWAY NO.
SHM	6	SEE TITLE SHEET		SH 289
GRAPHICS	STATE	DISTRICT	COUNTY	SHEET NO.
OE	TEXAS	DALLAS	COLLIN	
CHECK	CONTROL	SECTION	JOB	56
SM	0091	03	P-201107-01	
CHECK				

$FILEABBREV$

12/29/2011
T:\DALDGN\S\SH289\Design\sheets\TCP\TCP1\SH 289 TCP1*9.dgn

TXDOT
100.0000 ft / IN.

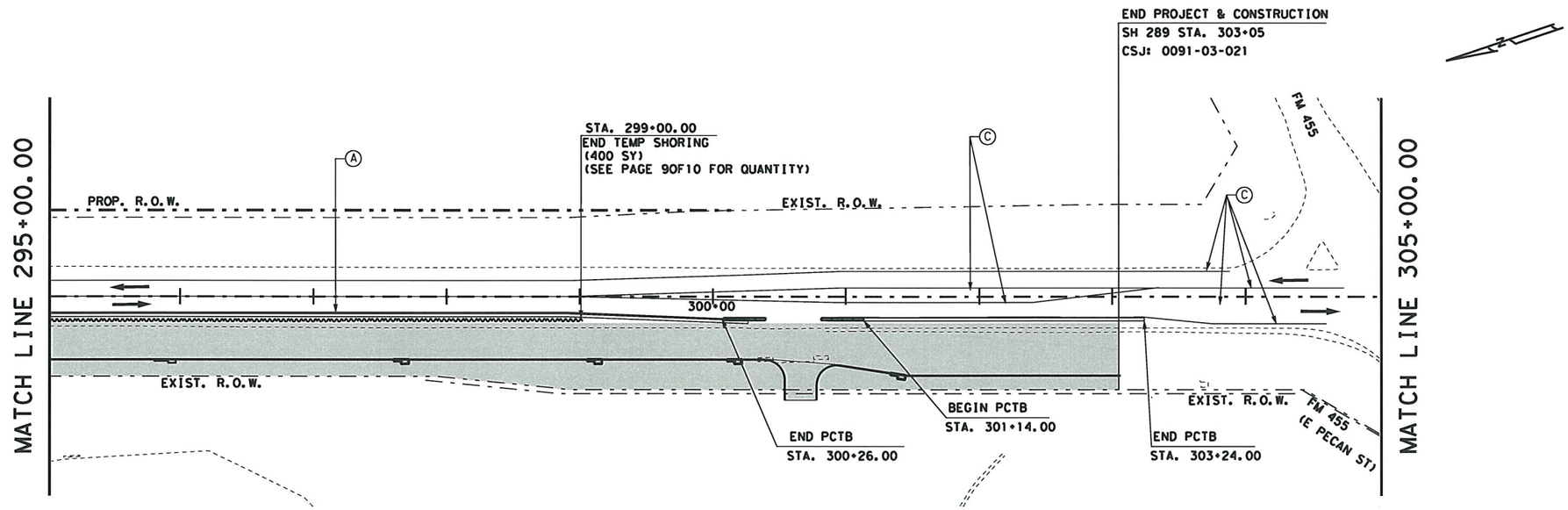

LEGEND

- CONSTRUCTION THIS PHASE
- CONSTRUCTION PREVIOUS PHASE
- TEMPORARY ASPHALT 12" TYPE "B"
- PORTABLE CONCRETE TRAFFIC BARRIER (PCTB)
- TEMPORARY CRASH CUSHION (20')
- SIGN
- TYPE III BARRICADE
- Ⓐ WK ZN PAV MRK. NON-REMOV (W) 4" (SLD)
- Ⓑ WK ZN PAV MRK. NON-REMOV (Y) 4" (SLD)
- Ⓒ EXISTING 4" PAV MRK
- TEMPORARY TRAFFIC

NOTE:

1. SEE PROJECT LAYOUT SHEET FOR ADVANCE WARNING AND SIGN PLACEMENT.

2. EXISTING PAVEMENT MARKINGS TO REMAIN DURING PHASE I, EXCEPT WHERE NOTED IN THE PLANS OR WHERE MARKINGS ARE WORN. PROVIDE WORK ZONE PAVEMENT MARKINGS AS NEEDED.

3. THE CONTRACTOR IS REQUIRED TO PROVIDE ACCESS TO PRIVATE PROPERTY AND INTERSECTING ROADWAYS AT ALL TIMES.

4. THE CONTRACTOR IS REQUIRED TO MAINTAIN DRAINAGE DURING CONSTRUCTION.

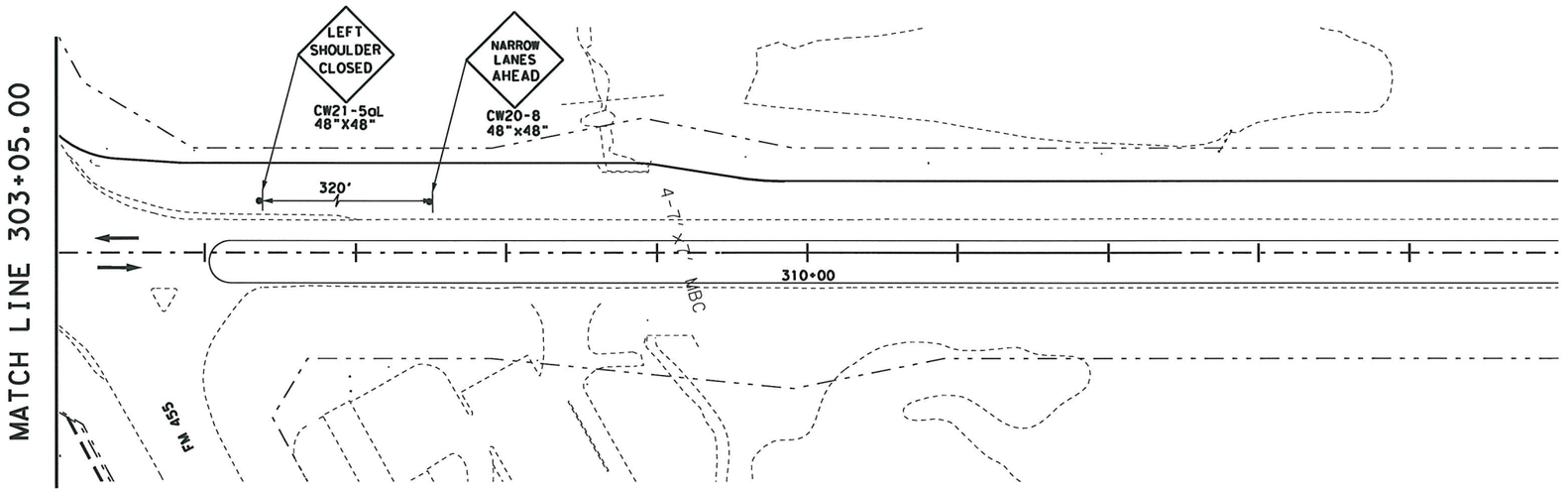

512-2048	512-2052	545-2049	662-2004
PORT CTB (FUR & INST) (F - SHAPE) (TY 1)	PORT CTB (REMOVE) (F - SHAPE) (TY 1)	CRASH CUSH ATTEN (INSTL) (WORK ZONE)	WK ZN PAV MRK NON - REMOV (W) 4" (SLD)
LF	LF	EA	LF
750	300	2	530

STATE OF TEXAS
HASSAN SAM MOGHADASSI
84231
LICENSED
PROFESSIONAL ENGINEER

H. Moghadassi ,P.E. 7/12/11
Signature of Registrant & Date

SH 289 TCP1*10.dgn

Texas Department of Transportation
© 2011

SH 289
FM 455 TO N BUS 289C
TRAFFIC CONTROL PLAN
PHASE I

SCALE: 1"= 100 Sheet 10 of 10

DESIGN	FED. RD. DIV. NO.	PROJECT NO.		HIGHWAY NO.
SHM	6	SEE TITLE SHEET		SH 289
GRAPHICS OE	STATE	DISTRICT	COUNTY	SHEET NO.
CHECK SM	TEXAS	DALLAS	COLLIN	57
CHECK	CONTROL	SECTION	JOB	
	0091	03	P-201107-01	

...\tcp\TCP1\SH 289 TCP1*10.dgn

7/11/2011
I:\dal\dgn*s\sh289\design\sheets\tcp\TCP1\SH 289 TCP1*10.dgn

TXDOT
16.0000 ft / IN.

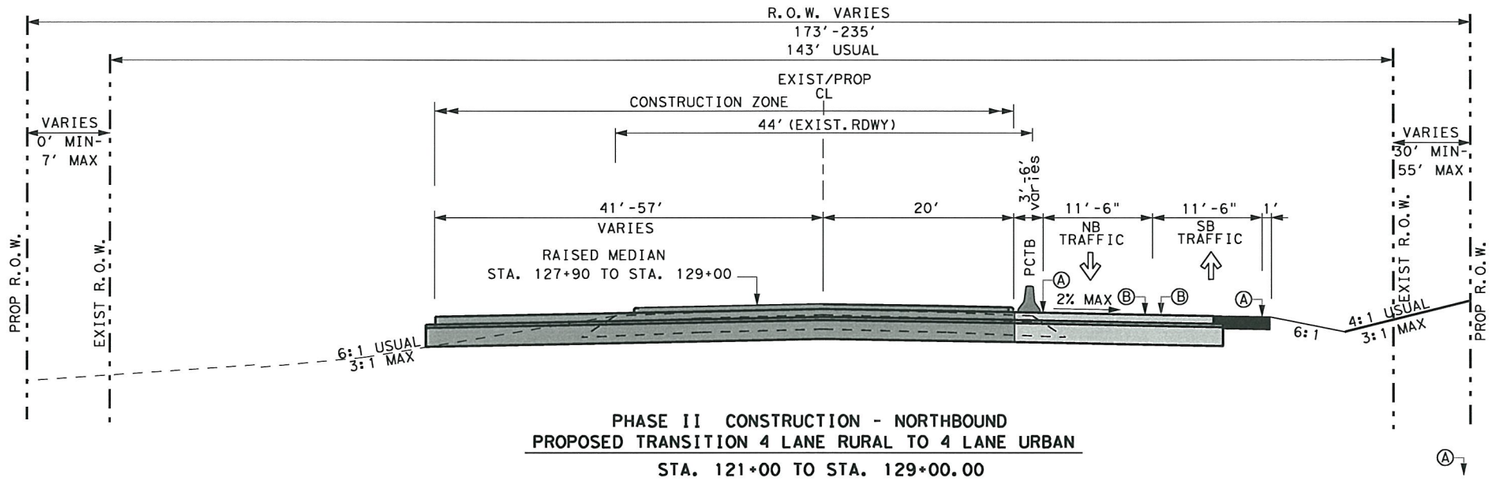

PHASE II CONSTRUCTION - NORTHBOUND
PROPOSED TRANSITION 4 LANE RURAL TO 4 LANE URBAN
STA. 121+00 TO STA. 129+00.00

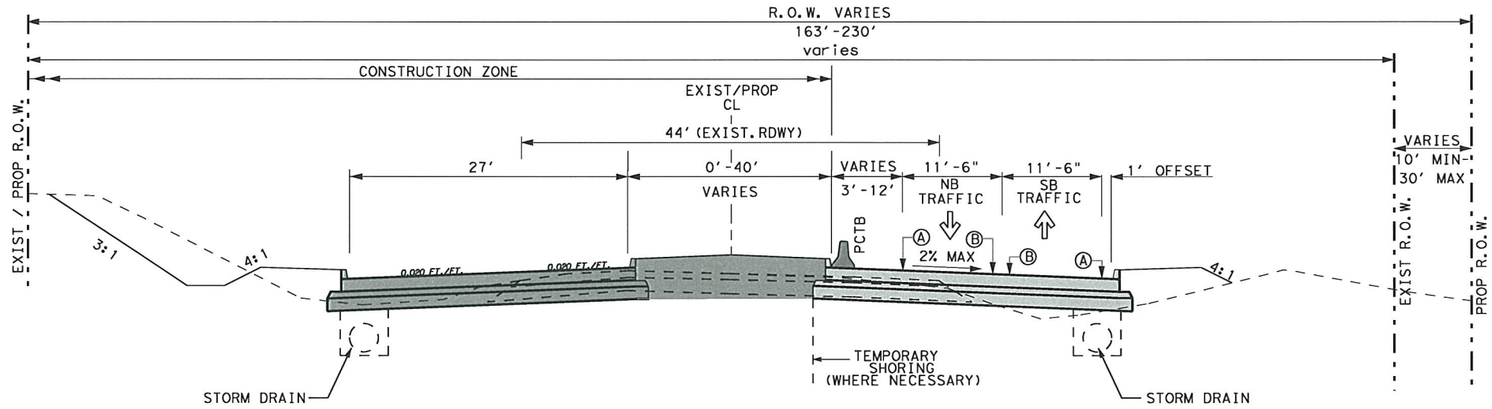

PHASE II CONSTRUCTION - NORTHBOUND
PROPOSED 4 LANE URBAN
STA. 129+00 TO STA. 133+60.00

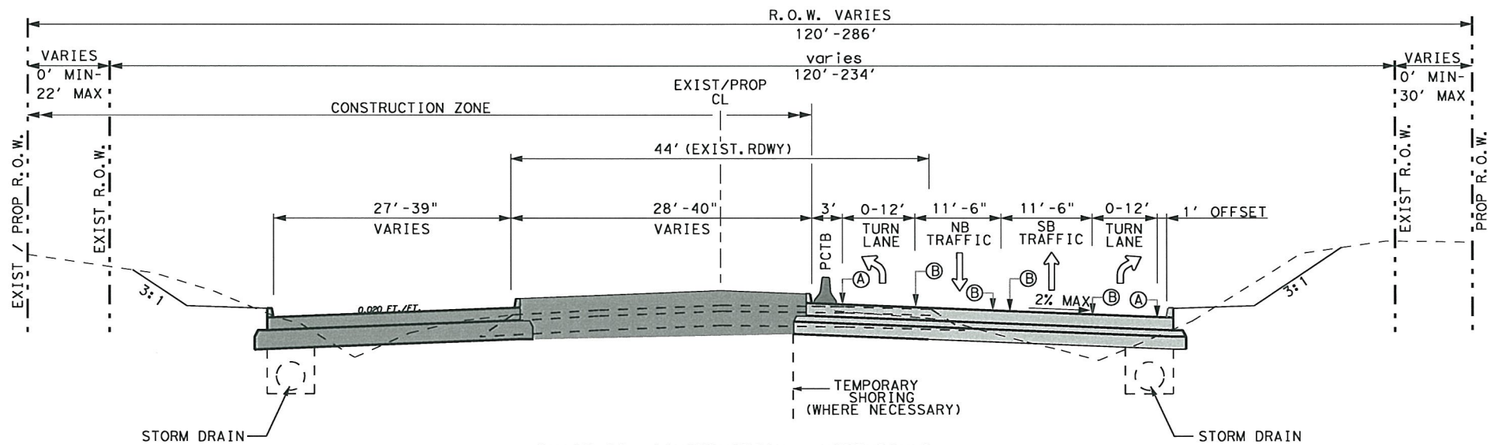

PHASE II CONSTRUCTION - NORTHBOUND
PROPOSED 4 LANE URBAN
STA. 133+60 TO STA. 303+05

LEGEND

- CONSTRUCTION THIS PHASE
- CONSTRUCTION PREVIOUS PHASE
- TEMPORARY ASPHALT 12" TYPE "B"
- (A) WK ZN PAV MRK. NON-REMOV (W) 4" (SLD W/MRKR)
- (B) WK ZN PAV MRK. NON-REMOV (Y) 4" (SLD W/MRKR)

STATE OF TEXAS
HASSAN SAM MOGHADASSI
84231
LICENSED PROFESSIONAL ENGINEER

H. Moghadassi , P.E. 7/12/11
Signature of Registrant & Date

Texas Department of Transportation
© 2011

SH 289
FM455 TO N BUS 289C
TRAFFIC CONTROL PLAN
PHASE II TYPICAL SECTIONS

SCALE: NOT TO SCALE — Sheet 1 of 1

DESIGN	FED.RD. DIV.NO.	PROJECT NO.		HIGHWAY NO.
SHM	6	SEE TITLE SHEET		SH 289
GRAPHICS OE	STATE	DISTRICT	COUNTY	SHEET NO.
CHECK SHM	TEXAS	DALLAS	COLLIN	58
CHECK	CONTROL	SECTION	JOB	
	0091	03		

P-201107-01

7/11/2011
I:\dlgn*s\sh289\design\sheets\tcp\tcp*typ\289TypX01.dgn
...\tcp\tcp*typ\289TypX01.dgn

TXDOT
100.0000 ft / IN.

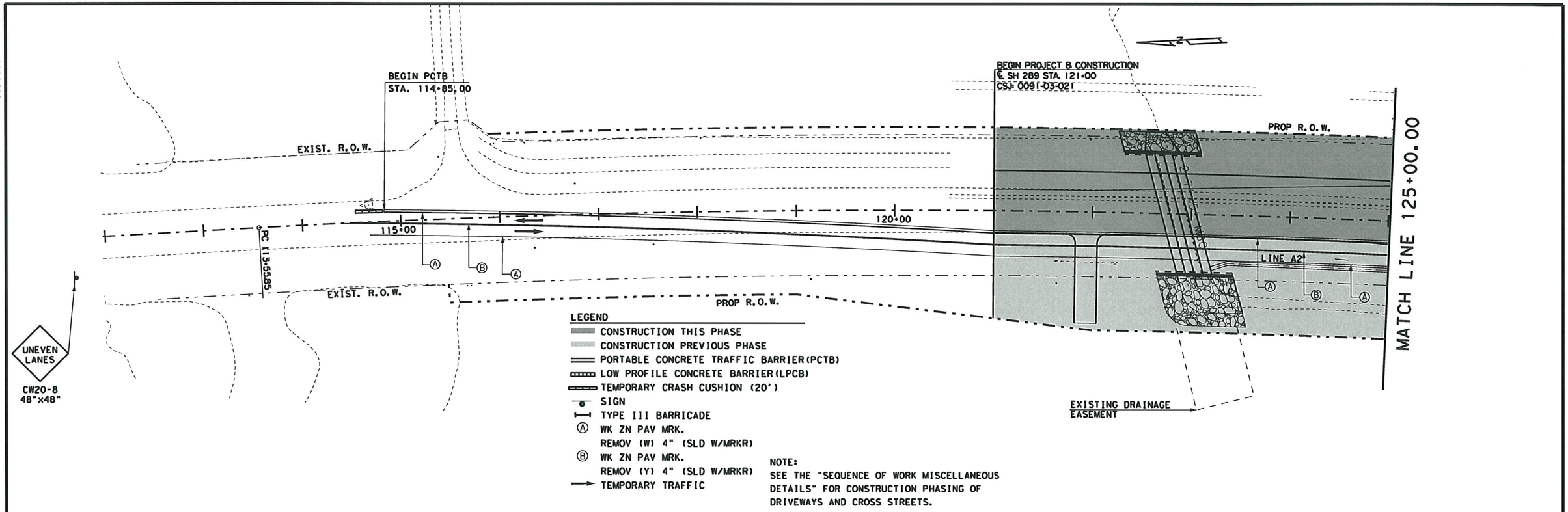

NOTE:
SEE THE "SEQUENCE OF WORK MISCELLANEOUS DETAILS" FOR CONSTRUCTION PHASING OF DRIVEWAYS AND CROSS STREETS.

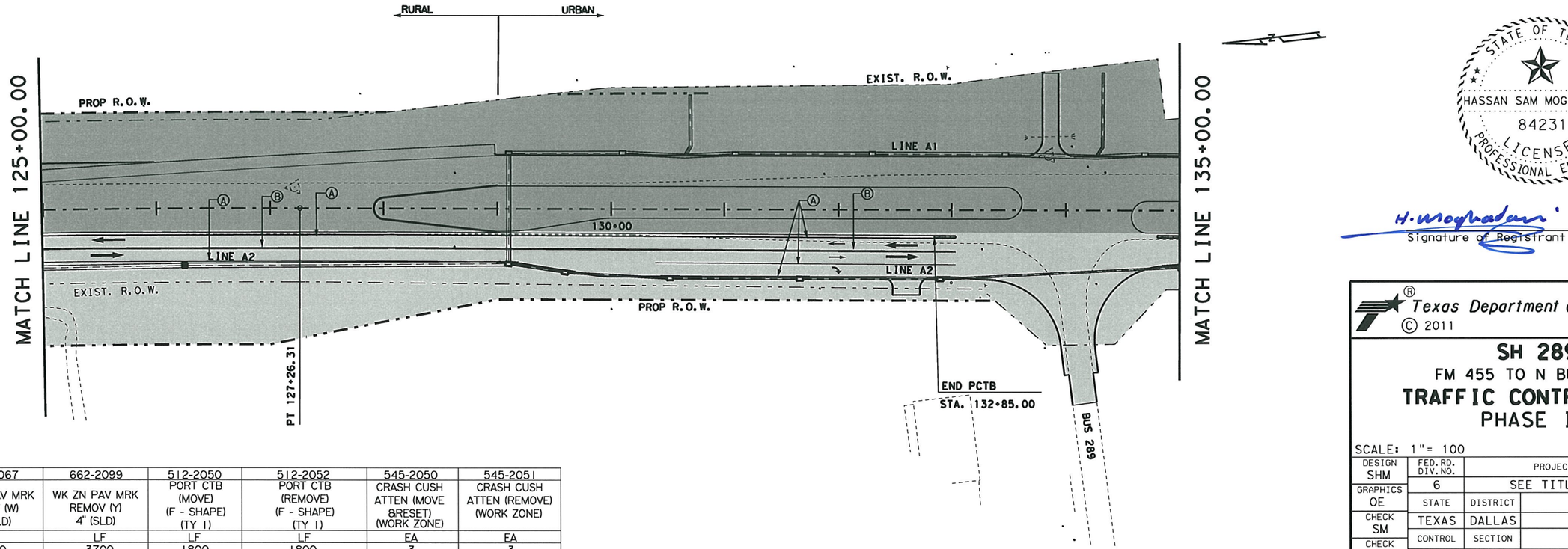

662-2067	662-2099	512-2050	512-2052	545-2050	545-2051
WK ZN PAV MRK REMOV (W) 4" (SLD)	WK ZN PAV MRK REMOV (Y) 4" (SLD)	PORT CTB (MOVE) (F - SHAPE) (TY I)	PORT CTB (REMOVE) (F - SHAPE) (TY I)	CRASH CUSH ATTEN (MOVE &RESET) (WORK ZONE)	CRASH CUSH ATTEN (REMOVE) (WORK ZONE)
LF	LF	LF	LF	EA	EA
3970	3700	1800	1800	3	3

HASSAN SAM MOGHADASSI
84231
LICENSED PROFESSIONAL ENGINEER
STATE OF TEXAS

H. Moghadassi, P.E. 7/12/11
Signature of Registrant & Date

SH 289 TCP2*1.dgn

Texas Department of Transportation
© 2011

SH 289
FM 455 TO N BUS 289C
TRAFFIC CONTROL PLAN
PHASE II

SCALE: 1"= 100 Sheet 1 of 10

DESIGN	FED.RD. DIV.NO.	PROJECT NO.		HIGHWAY NO.
SHM	6	SEE TITLE SHEET		SH 289
GRAPHICS OE	STATE	DISTRICT	COUNTY	SHEET NO.
CHECK SM	TEXAS	DALLAS	COLLIN	59
CHECK	CONTROL	SECTION	JOB	
	0091	03	221	

P-201107-01

7/11/2011
t:\dalgn*s\sh289\design\sheets\tcp\tcp2\SH 289 TCP2*1.dgn
...\tcp\tcp2\SH 289 TCP2*1.dgn

TXDOT
100.0000 ft / IN.

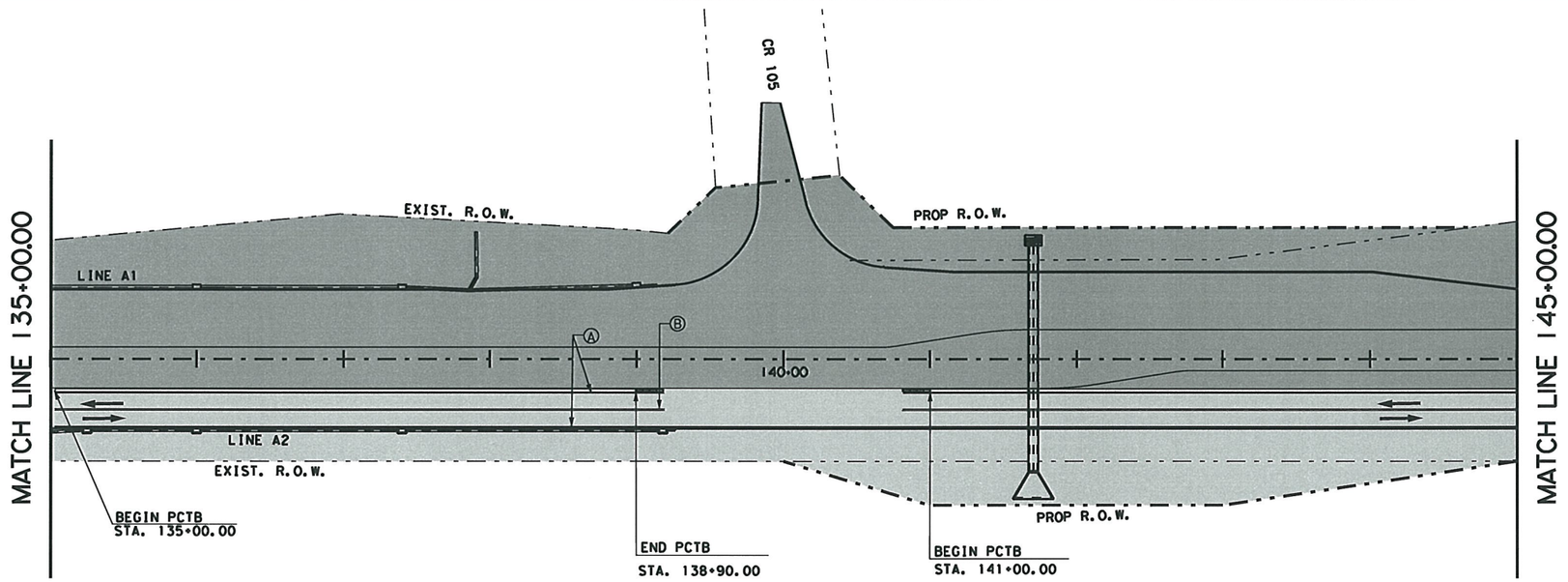

LEGEND

- CONSTRUCTION THIS PHASE
- CONSTRUCTION PREVIOUS PHASE
- PORTABLE CONCRETE TRAFFIC BARRIER (PCTB)
- LOW PROFILE CONCRETE BARRIER (LPCB)
- TEMPORARY CRASH CUSHION (20')
- SIGN
- TYPE III BARRICADE
- (A) WK ZN PAV MRK. REMOV (W) 4" (SLD W/MRKR)
- (B) WK ZN PAV MRK. REMOV (Y) 4" (SLD W/MRKR)
- TEMPORARY TRAFFIC

NOTE:
SEE THE "SEQUENCE OF WORK MISCELLANEOUS DETAILS" FOR CONSTRUCTION PHASING OF DRIVEWAYS AND CROSS STREETS.

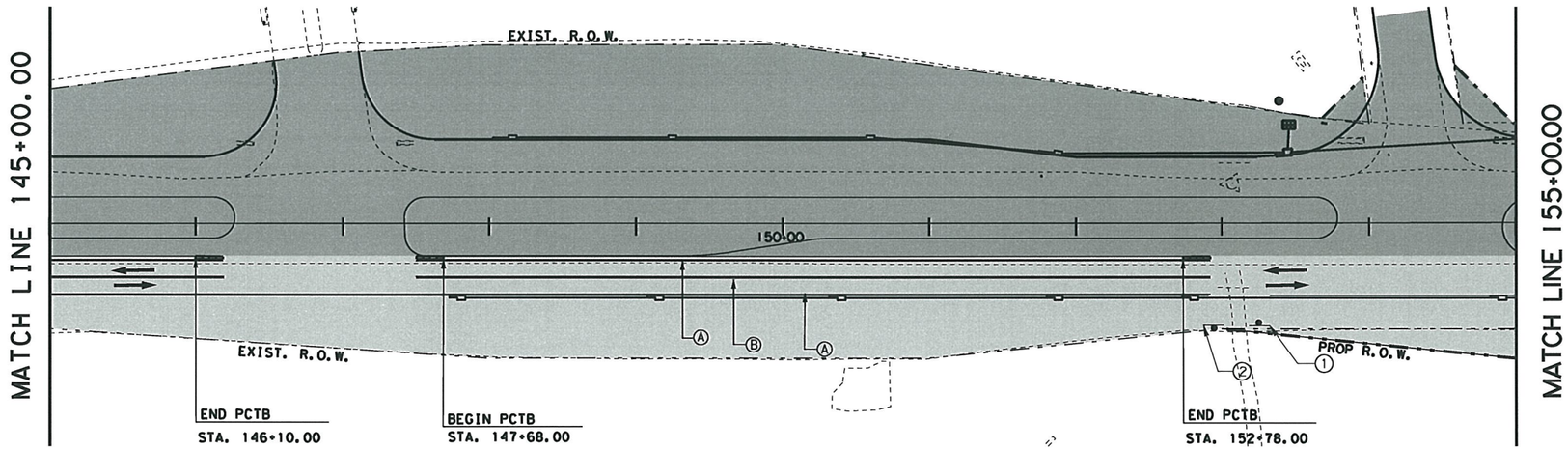

662-2067	662-2099	512-2050	512-2052	545-2049	545-2050	545-2051
WK ZN PAV MRK REMOV (W) 4" (SLD)	WK ZN PAV MRK REMOV (Y) 4" (SLD)	PORT CTB (MOVE) (F - SHAPE) (TY I)	PORT CTB (REMOVE) (F - SHAPE) (TY I)	CRASH CUSH ATTEN (INSL) (WORK ZONE)	CRASH CUSH ATTEN (MOVE &RESET) (WORK ZONE)	CRASH CUSH ATTEN (REMOVE) (WORK ZONE)
LF	LF	LF	LF	EA	EA	EA
2820	2820	1410	1410	4	1	5

STATE OF TEXAS
HASSAN SAM MOGHADASSI
84231
LICENSED
PROFESSIONAL ENGINEER

H. Moghadassi, P.E. 7/12/11
Signature of Registrant & Date

SH 289 TCP2x2.dgn

Texas Department of Transportation
© 2011

SH 289
FM 455 TO N BUS 289C
TRAFFIC CONTROL PLAN
PHASE II

SCALE: 1"= 100 Sheet 2 of 10

DESIGN	FED.RD. DIV.NO.	PROJECT NO.		HIGHWAY NO.
SHM	6	SEE TITLE SHEET		SH 289
GRAPHICS	STATE	DISTRICT	COUNTY	SHEET NO.
OE	TEXAS	DALLAS	COLLIN	
CHECK	CONTROL	SECTION	JOB	60
SM	0091	03	P-201107-01	
CHECK				

...\tcp\tcp2\SH 289 TCP2x2.dgn

7/11/2011
I:\dalgn\s\sh289\design\sheets\tcp\tcp2\SH 289 TCP2x2.dgn

TXDOT
100.0000 ft / IN.

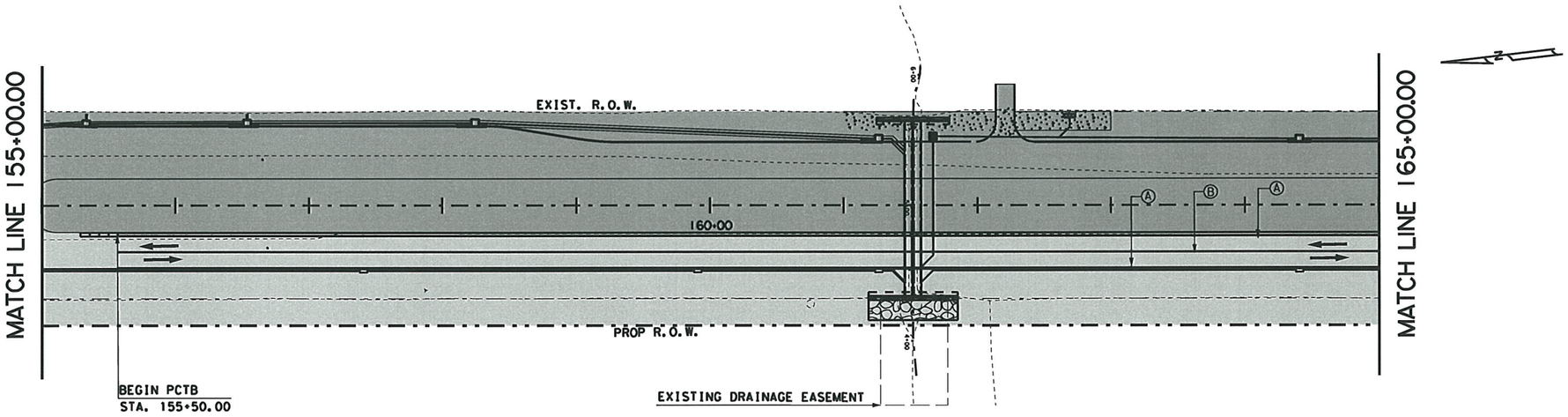

LEGEND

- CONSTRUCTION THIS PHASE
- CONSTRUCTION PREVIOUS PHASE
- PORTABLE CONCRETE TRAFFIC BARRIER (PCTB)
- LOW PROFILE CONCRETE BARRIER (LPCB)
- TEMPORARY CRASH CUSHION (20')
- SIGN
- TYPE III BARRICADE
- (A) WK ZN PAV MRK. REMOV (W) 4" (SLD W/MRKR)
- (B) WK ZN PAV MRK. REMOV (Y) 4" (SLD W/MRKR)
- TEMPORARY TRAFFIC

NOTE:
SEE THE "SEQUENCE OF WORK MISCELLANEOUS DETAILS" FOR CONSTRUCTION PHASING OF DRIVEWAYS AND CROSS STREETS.

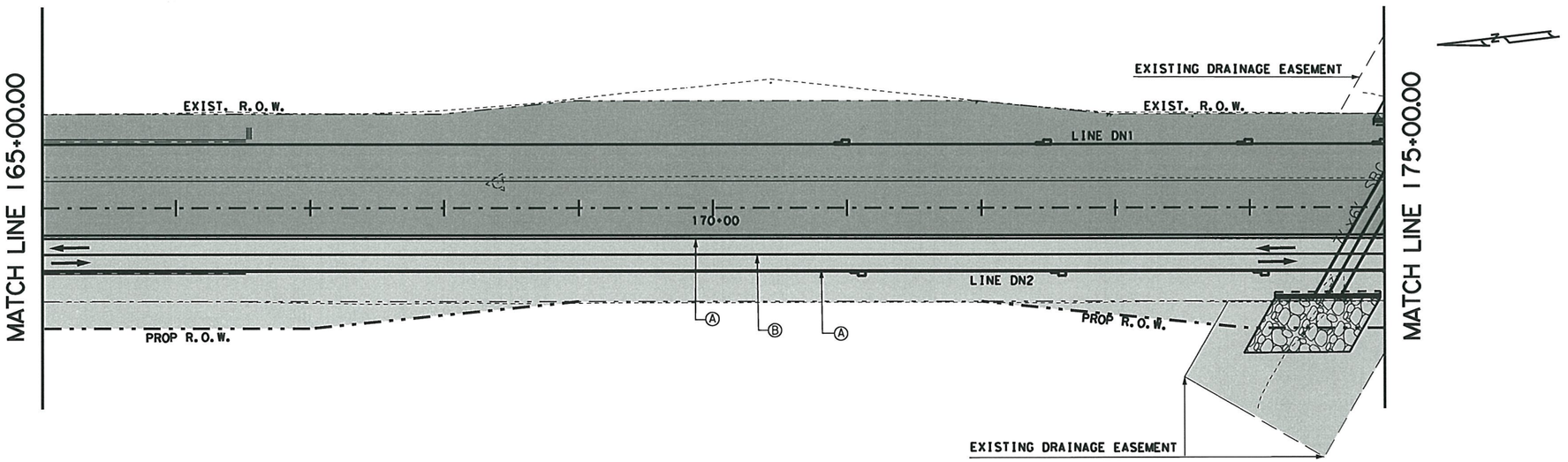

662-2067	662-2099	512-2050	512-2052	545-2050	545-2051
WK ZN PAV MRK REMOV (W) 4" (SLD)	WK ZN PAV MRK REMOV (Y) 4" (SLD)	PORT CTB (MOVE) (F - SHAPE) (TY 1)	PORT CTB (REMOVE) (F - SHAPE) (TY 1)	CRASH CUSH ATTEN (MOVE &RESET) (WORK ZONE)	CRASH CUSH ATTEN (REMOVE) (WORK ZONE)
LF	LF	LF	LF	EA	EA
3900	3900	1950	1950	1	1

HASSAN SAM MOGHADASSI
84231
LICENSED PROFESSIONAL ENGINEER
STATE OF TEXAS

H. Moghadassi, P.E. 7/12/11
Signature of Registrant & Date

SH 289 TCP2*3.dgn

Texas Department of Transportation
© 2011

SH 289
FM 455 TO N BUS 289C
TRAFFIC CONTROL PLAN
PHASE II

SCALE: 1"= 100 Sheet 3 of 10

DESIGN	FED.RD. DIV.NO.	PROJECT NO.		HIGHWAY NO.
SHM	6	SEE TITLE SHEET		SH 289
GRAPHICS OE	STATE	DISTRICT	COUNTY	SHEET NO.
CHECK SM	TEXAS	DALLAS	COLLIN	61
CHECK	CONTROL	SECTION	JOB	
	0091	03	P-201107-01	

7/11/2011
t:\dal\dgn*s\sh289\design\sheets\tcp\tcp2\SH 289 TCP2*3.dgn
...\tcp\tcp2\SH 289 TCP2*3.dgn

TXDOT
100.0000 ft / IN.

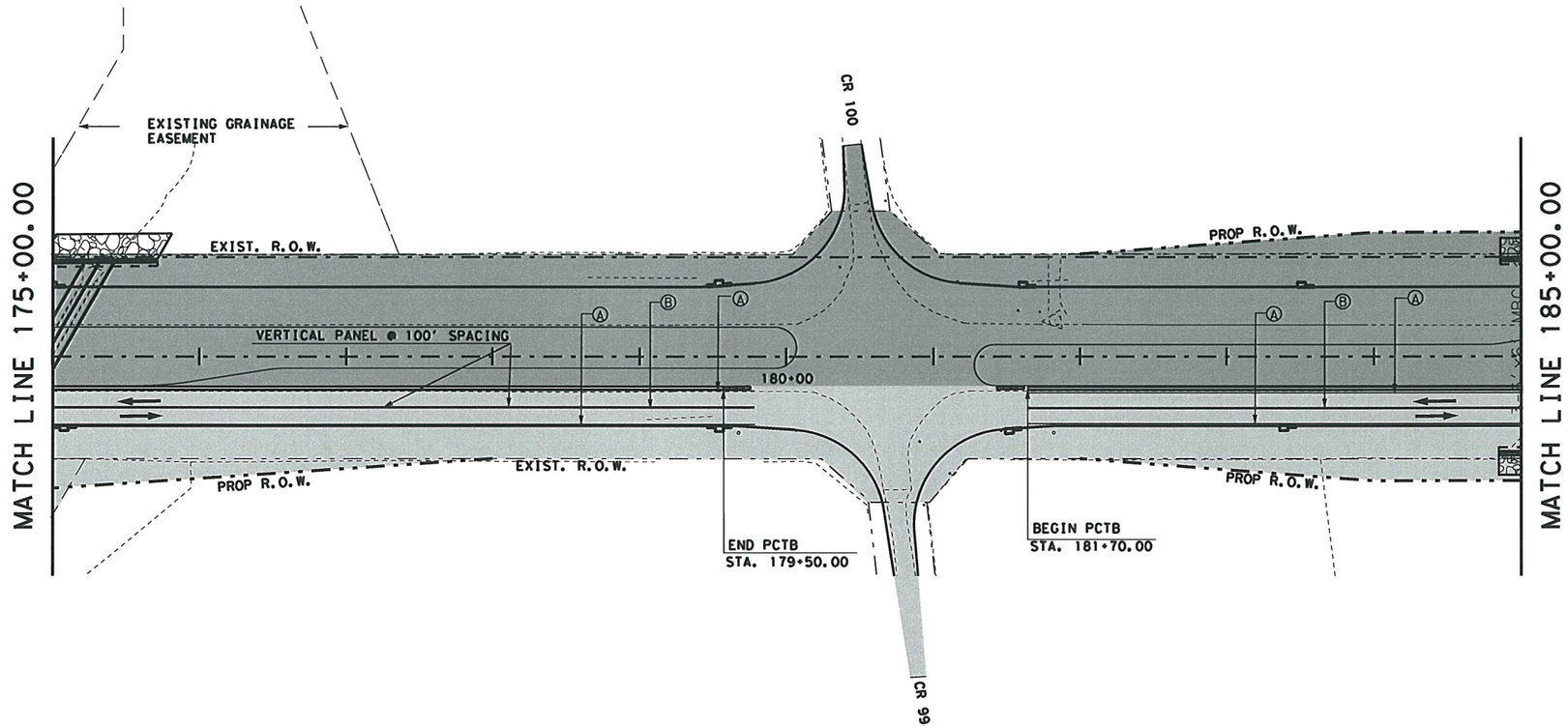

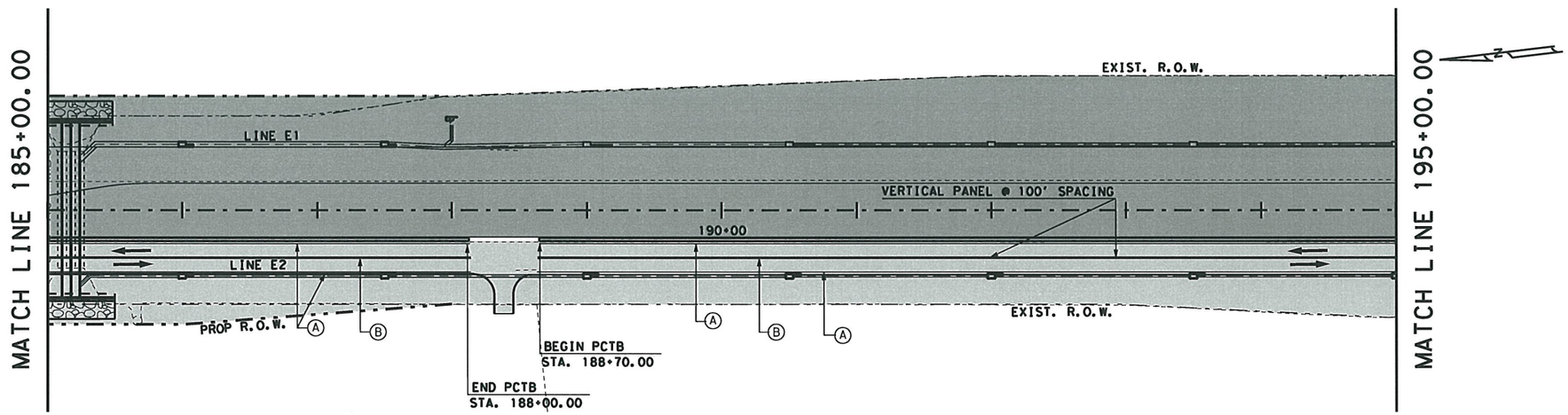

LEGEND

- CONSTRUCTION THIS PHASE
- CONSTRUCTION PREVIOUS PHASE
- PORTABLE CONCRETE TRAFFIC BARRIER (PCTB)
- LOW PROFILE CONCRETE BARRIER (LPCB)
- TEMPORARY CRASH CUSHION (20')
- SIGN
- TYPE III BARRICADE
- (A) WK ZN PAV MRK. REMOV (W) 4" (SLD W/MRKR)
- (B) WK ZN PAV MRK. REMOV (Y) 4" (SLD W/MRKR)
- TEMPORARY TRAFFIC

NOTE:
SEE THE "SEQUENCE OF WORK MISCELLANEOUS DETAILS" FOR CONSTRUCTION PHASING OF DRIVEWAYS AND CROSS STREETS.

662-2067	662-2099	512-2050	512-2052	545-2050	545-2051
WK ZN PAV MRK REMOV (W) 4" (SLD)	WK ZN PAV MRK REMOV (Y) 4" (SLD)	PORT CTB (MOVE) (F - SHAPE) (TY I)	PORT CTB (REMOVE) (F - SHAPE) (TY I)	CRASH CUSH ATTEN (MOVE &RESET) (WORK ZONE)	CRASH CUSH ATTEN (REMOVE) (WORK ZONE)
LF	LF	LF	LF	EA	EA
4320	4320	1710	1710	2	2

STATE OF TEXAS
HASSAN SAM MOGHADASSI
84231
LICENSED
PROFESSIONAL ENGINEER

H. Moghadassi, P.E. 7/12/11
Signature of Registrant & Date

SH 289 TCP2×4.dgn

Texas Department of Transportation
© 2011

SH 289

FM 455 TO N BUS 289C

TRAFFIC CONTROL PLAN
PHASE II

SCALE: 1"= 100 Sheet 4 of 10

DESIGN	FED.RD. DIV.NO.	PROJECT NO.		HIGHWAY NO.
SHM	6	SEE TITLE SHEET		SH 289
GRAPHICS OE	STATE	DISTRICT	COUNTY	SHEET NO.
CHECK SM	TEXAS	DALLAS	COLLIN	62
CHECK	CONTROL	SECTION	JOB	
	0091	03	P-201107-01	

7/11/2011
I:\dal\dgn\s\sh289\design\sheets\tcp\tcp2\SH 289 TCP2×4.dgn
...\tcp\tcp2\SH 289 TCP2×4.dgn

TXDOT
100.0000 ft / IN.

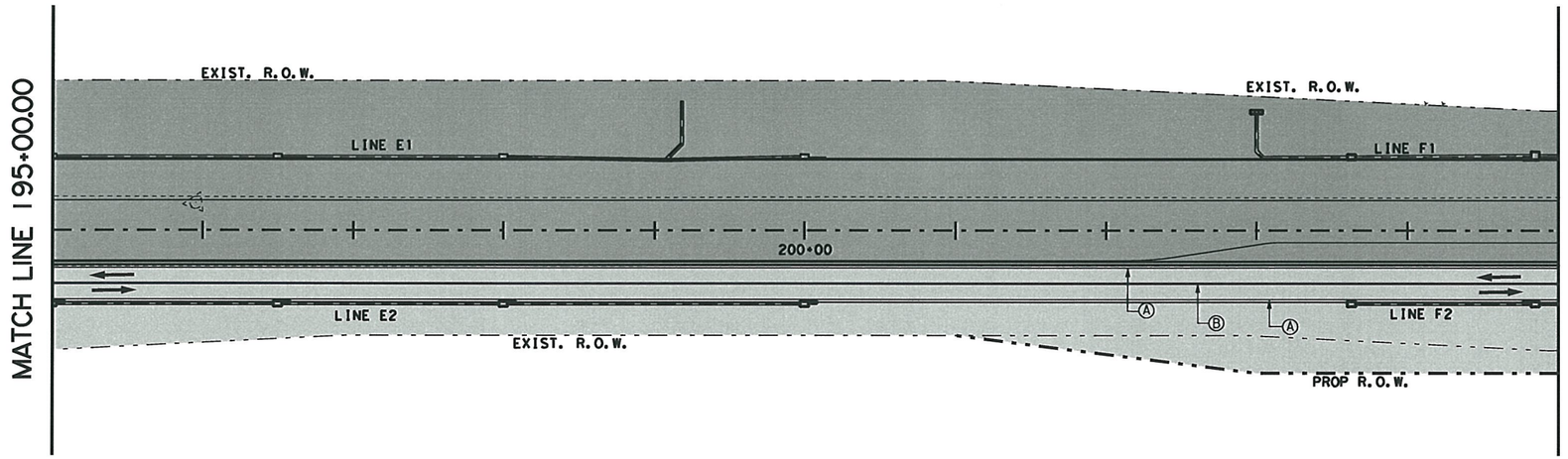

LEGEND

- CONSTRUCTION THIS PHASE
- CONSTRUCTION PREVIOUS PHASE
- PORTABLE CONCRETE TRAFFIC BARRIER (PCTB)
- LOW PROFILE CONCRETE BARRIER (LPCB)
- TEMPORARY CRASH CUSHION (20')
- SIGN
- TYPE III BARRICADE
- Ⓐ WK ZN PAV MRK. REMOV (W) 4" (SLD W/MRKR)
- Ⓑ WK ZN PAV MRK. REMOV (Y) 4" (SLD W/MRKR)
- TEMPORARY TRAFFIC

NOTE:
SEE THE "SEQUENCE OF WORK MISCELLANEOUS DETAILS" FOR CONSTRUCTION PHASING OF DRIVEWAYS AND CROSS STREETS.

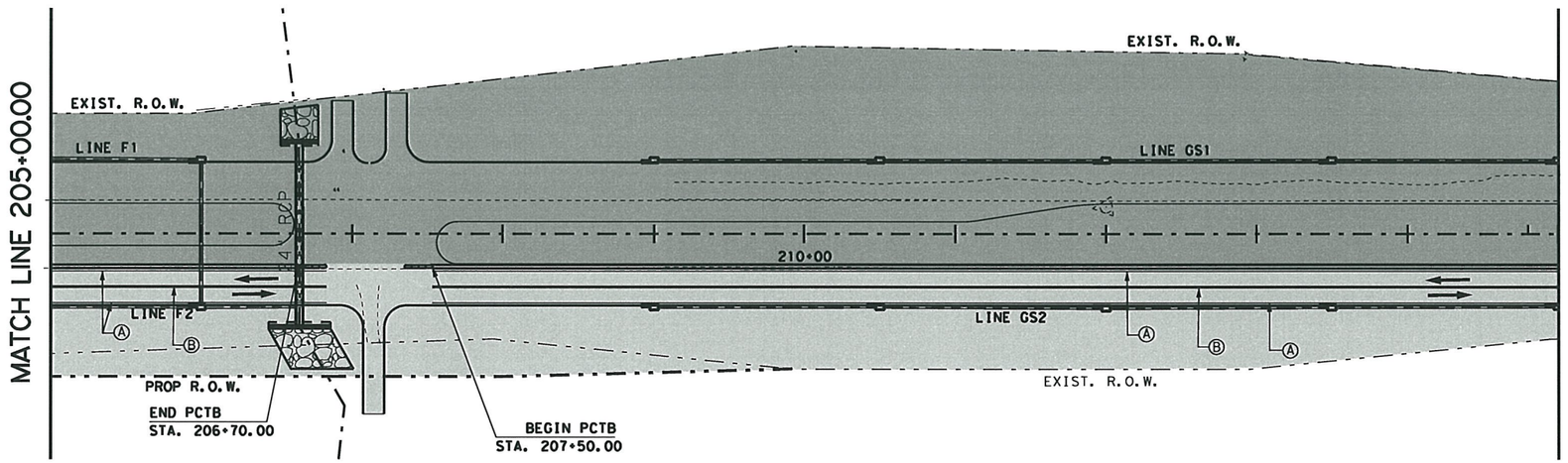

662-2067	662-2099	512-2050	512-2052	545-2050	545-2051
WK ZN PAV MRK REMOV (W) 4" (SLD)	WK ZN PAV MRK REMOV (Y) 4" (SLD)	PORT CTB (MOVE) (F - SHAPE) (TY 1)	PORT CTB (REMOVE) (F - SHAPE) (TY 1)	CRASH CUSH ATTEN (MOVE &RESET) (WORK ZONE)	CRASH CUSH ATTEN (REMOVE) (WORK ZONE)
LF	LF	LF	LF	EA	EA
4160	4160	1920	1920	2	2

STATE OF TEXAS
HASSAN SAM MOGHADASSI
84231
LICENSED
PROFESSIONAL ENGINEER

H. Moghadassi, P.E. 7/12/11
Signature of Registrant & Date

SH 289 TCP2*5.dgn

Texas Department of Transportation
© 2011

SH 289
FM 455 TO N BUS 289C
TRAFFIC CONTROL PLAN
PHASE II

SCALE: 1"= 100 Sheet 5 of 10

DESIGN	FED.RD. DIV.NO.	PROJECT NO.		HIGHWAY NO.
SHM	6	SEE TITLE SHEET		SH 289
GRAPHICS	STATE	DISTRICT	COUNTY	SHEET NO.
OE	TEXAS	DALLAS	COLLIN	
CHECK	CONTROL	SECTION	JOB	63
SM	0091	03	P-201107-01	
CHECK				

7/11/2011
t:\dal\dgn*s\sh289\design\sheets\tcp\tcp2\SH 289 TCP2*5.dgn
...\tcp\tcp2\SH 289 TCP2*5.dgn

TXDOT
100.0000 ft / IN.

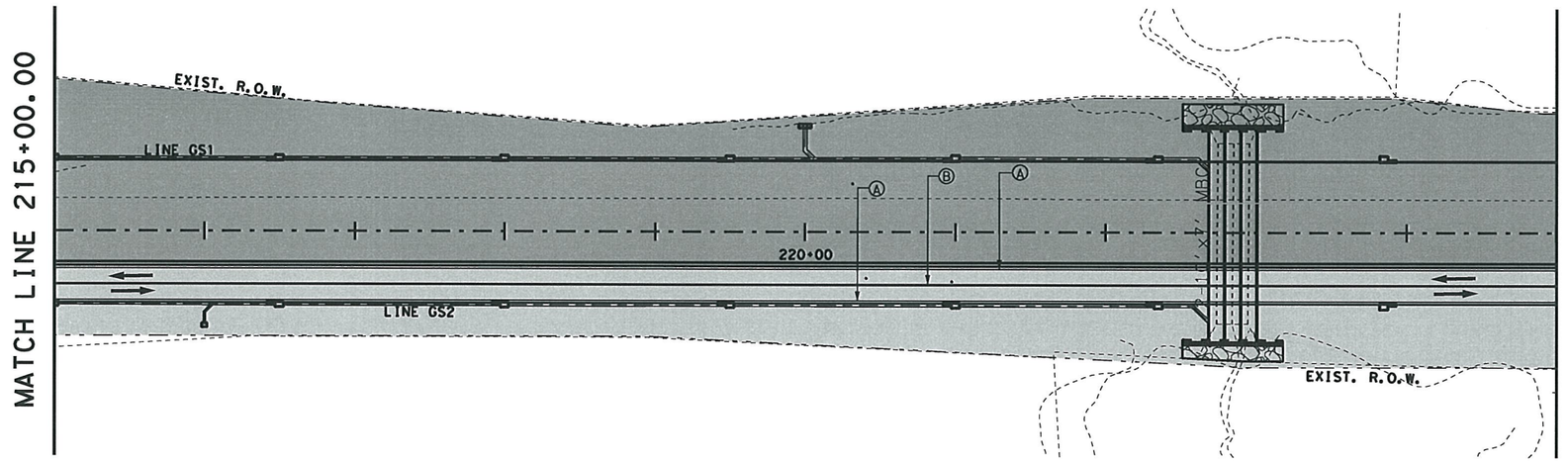

LEGEND
- CONSTRUCTION THIS PHASE
- CONSTRUCTION PREVIOUS PHASE
- PORTABLE CONCRETE TRAFFIC BARRIER (PCTB)
- LOW PROFILE CONCRETE BARRIER (LPCB)
- TEMPORARY CRASH CUSHION (20')
- SIGN
- TYPE III BARRICADE
- (A) WK ZN PAV MRK. REMOV (W) 4" (SLD W/MRKR)
- (B) WK ZN PAV MRK. REMOV (Y) 4" (SLD W/MRKR)
- TEMPORARY TRAFFIC

NOTE:
SEE THE "SEQUENCE OF WORK MISCELLANEOUS DETAILS" FOR CONSTRUCTION PHASING OF DRIVEWAYS AND CROSS STREETS.

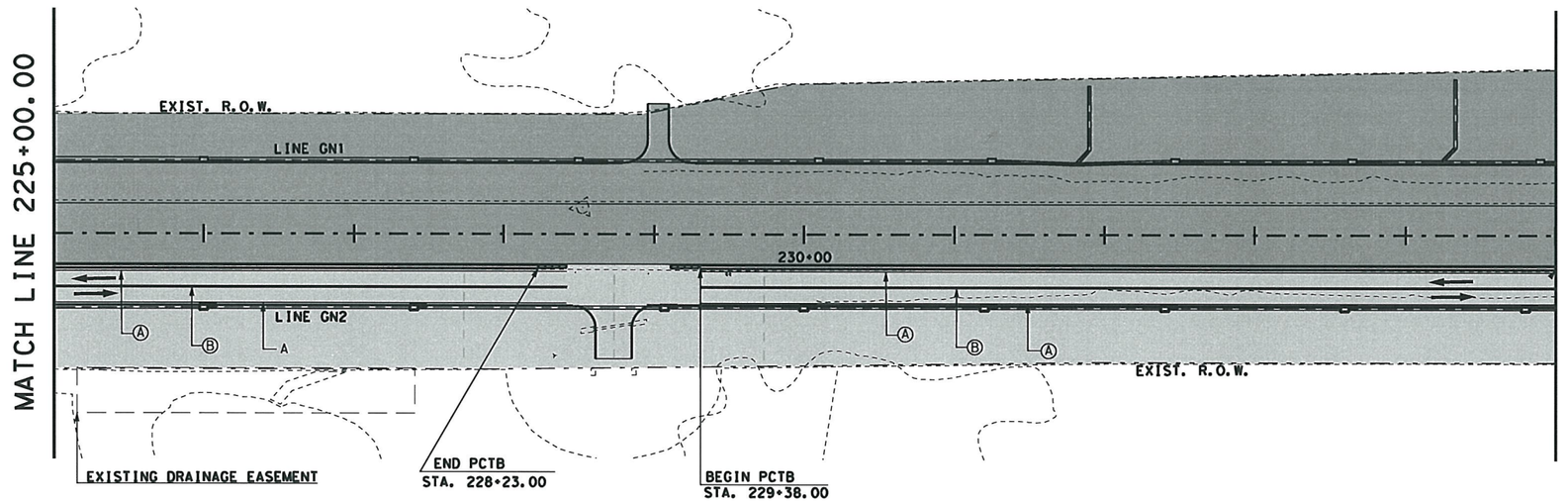

662-2067	662-2099	512-2050	512-2052	545-2050	545-2051
WK ZN PAV MRK REMOV (W) 4" (SLD)	WK ZN PAV MRK REMOV (Y) 4" (SLD)	PORT CTB (MOVE) (F - SHAPE) (TY I)	PORT CTB (REMOVE) (F - SHAPE) (TY I)	CRASH CUSH ATTEN (MOVE &RESET) (WORK ZONE)	CRASH CUSH ATTEN (REMOVE) (WORK ZONE)
LF	LF	LF	LF	EA	EA
3720	3720	1860	1860	2	2

STATE OF TEXAS
HASSAN SAM MOGHADASSI
84231
LICENSED PROFESSIONAL ENGINEER

H. Moghadassi, P.E. 7/12/11
Signature of Registrant & Date

SH 289 TCP2*6.dgn

Texas Department of Transportation
© 2011

SH 289
FM 455 TO N BUS 289C
TRAFFIC CONTROL PLAN
PHASE II

SCALE: 1"= 100 Sheet 6 of 10

DESIGN	FED.RD. DIV.NO.	PROJECT NO.		HIGHWAY NO.
SHM	6	SEE TITLE SHEET		SH 289
GRAPHICS	STATE	DISTRICT	COUNTY	SHEET NO.
OE	TEXAS	DALLAS	COLLIN	64
CHECK	CONTROL	SECTION	JOB	
SM	0091	03	P-201107-01	
CHECK				

7/11/2011
t:\dal\dgn*s\sh289\design\sheets\tcp\tcp2\SH 289 TCP2*6.dgn
...\tcp\tcp2\SH 289 TCP2*6.dgn

TXDOT
100.0000 ft / IN.

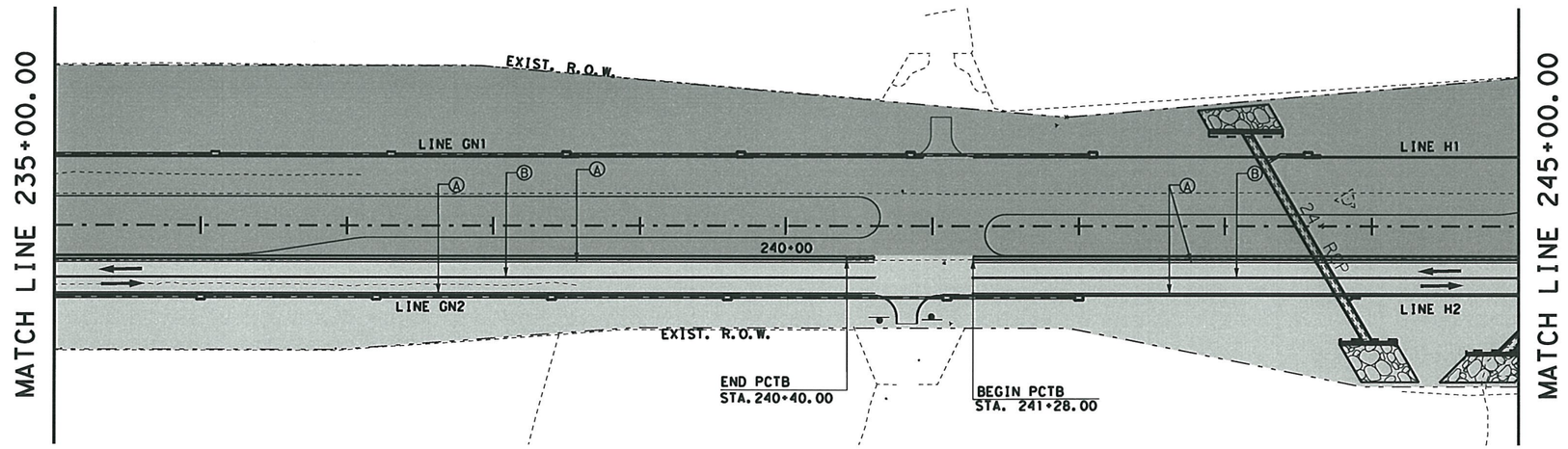

LEGEND

- CONSTRUCTION THIS PHASE
- CONSTRUCTION PREVIOUS PHASE
- PORTABLE CONCRETE TRAFFIC BARRIER (PCTB)
- LOW PROFILE CONCRETE BARRIER (LPCB)
- TEMPORARY CRASH CUSHION (20')
- SIGN
- TYPE III BARRICADE
- (A) WK ZN PAV MRK. REMOV (W) 4" (SLD W/MRKR)
- (B) WK ZN PAV MRK. REMOV (Y) 4" (SLD W/MRKR)
- TEMPORARY TRAFFIC

NOTE:
SEE THE "SEQUENCE OF WORK MISCELLANEOUS DETAILS" FOR CONSTRUCTION PHASING OF DRIVEWAYS AND CROSS STREETS.

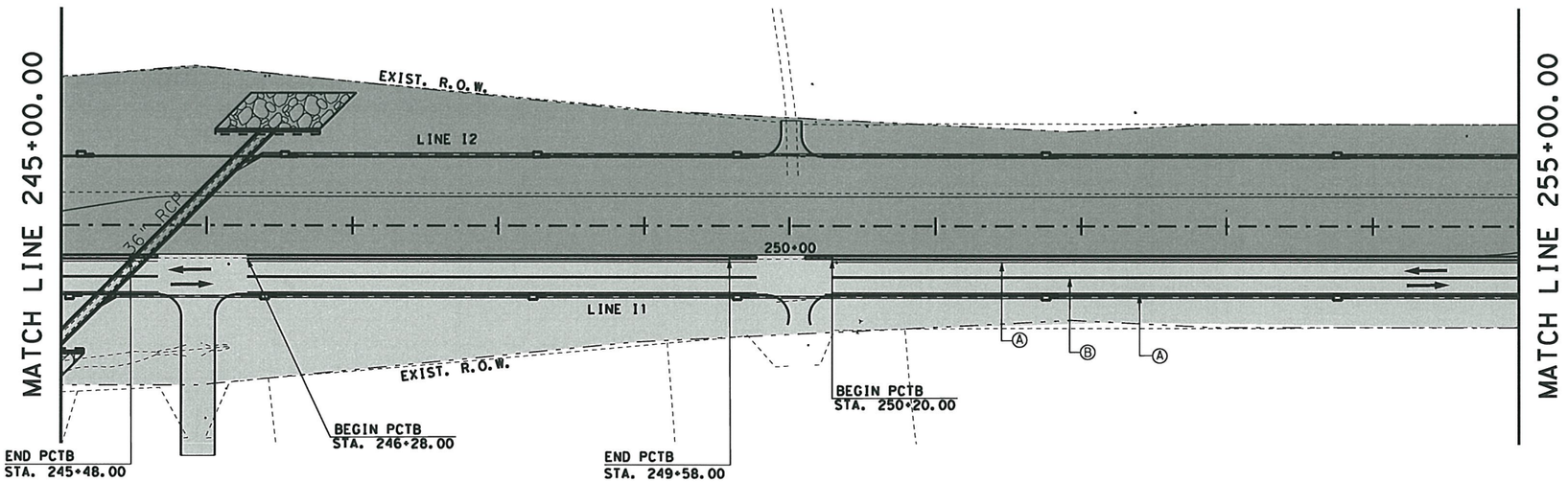

662-2067	662-2099	512-2050	512-2052	545-2050	545-2051
WK ZN PAV MRK REMOV (W) 4" (SLD)	WK ZN PAV MRK REMOV (Y) 4" (SLD)	PORT CTB (MOVE) (F - SHAPE) (TY 1)	PORT CTB (REMOVE) (F - SHAPE) (TY 1)	CRASH CUSH ATTEN (MOVE &RESET) (WORK ZONE)	CRASH CUSH ATTEN (REMOVE) (WORK ZONE)
LF	LF	LF	LF	EA	EA
3540	3540	1770	1770	2	2

STATE OF TEXAS
HASSAN SAM MOGHADASSI
84231
LICENSED
PROFESSIONAL ENGINEER

H. Moghadassi ,P.E. 7/12/11
Signature of Registrant & Date

SH 289 TCP2*7.dgn

Texas Department of Transportation
© 2011

SH 289
FM 455 TO N BUS 289C
TRAFFIC CONTROL PLAN
PHASE II

SCALE: 1"= 100 Sheet 7 of 10

DESIGN	FED.RD. DIV.NO.	PROJECT NO.		HIGHWAY NO.
SHM	6	SEE TITLE SHEET		SH 289
GRAPHICS OE	STATE	DISTRICT	COUNTY	SHEET NO.
CHECK SM	TEXAS	DALLAS	COLLIN	65
CHECK	CONTROL	SECTION	JOB	
	0091	03	P-201107-01	

7/11/2011
t:\dal\dgn*s\sh289\design\sheets\tcp\tcp2\SH 289 TCP2*7.dgn
...\tcp\tcp2\SH 289 TCP2*7.dgn

TXDOT
100.0000 ft / IN.

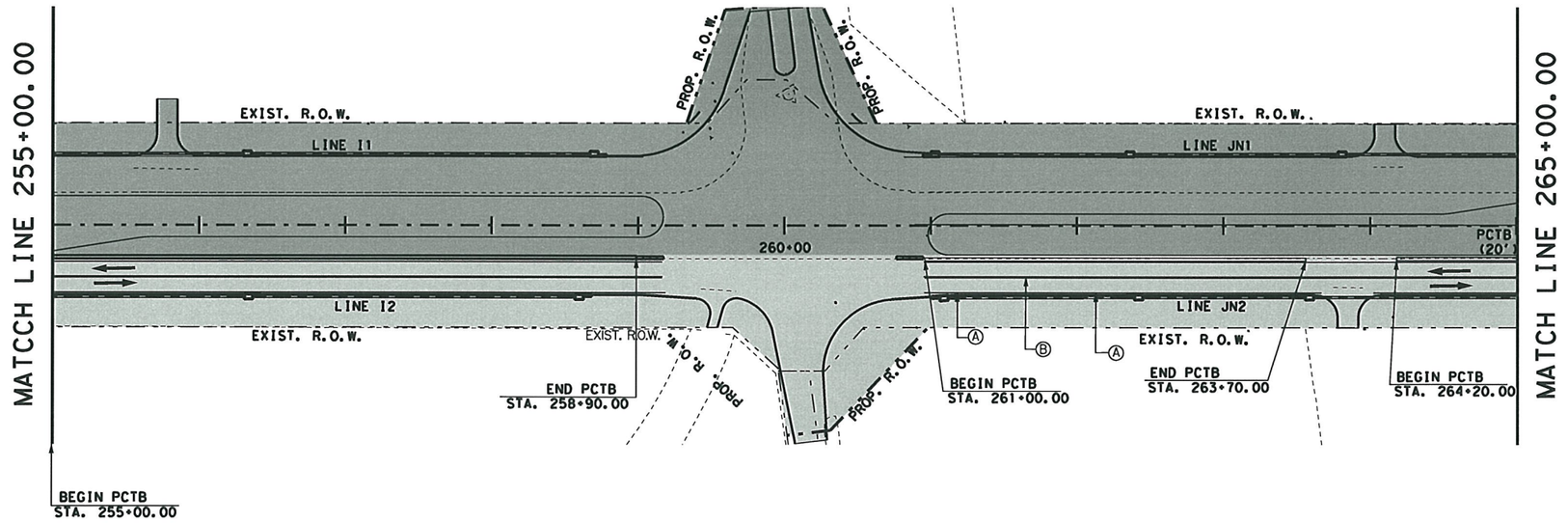

LEGEND

- CONSTRUCTION THIS PHASE
- CONSTRUCTION PREVIOUS PHASE
- PORTABLE CONCRETE TRAFFIC BARRIER (PCTB)
- LOW PROFILE CONCRETE BARRIER (LPCB)
- TEMPORARY CRASH CUSHION (20')
- SIGN
- TYPE III BARRICADE
- (A) WK ZN PAV MRK. REMOV (W) 4" (SLD W/MRKR)
- (B) WK ZN PAV MRK. REMOV (Y) 4" (SLD W/MRKR)
- TEMPORARY TRAFFIC

NOTE:
SEE THE "SEQUENCE OF WORK MISCELLANEOUS DETAILS" FOR CONSTRUCTION PHASING OF DRIVEWAYS AND CROSS STREETS.

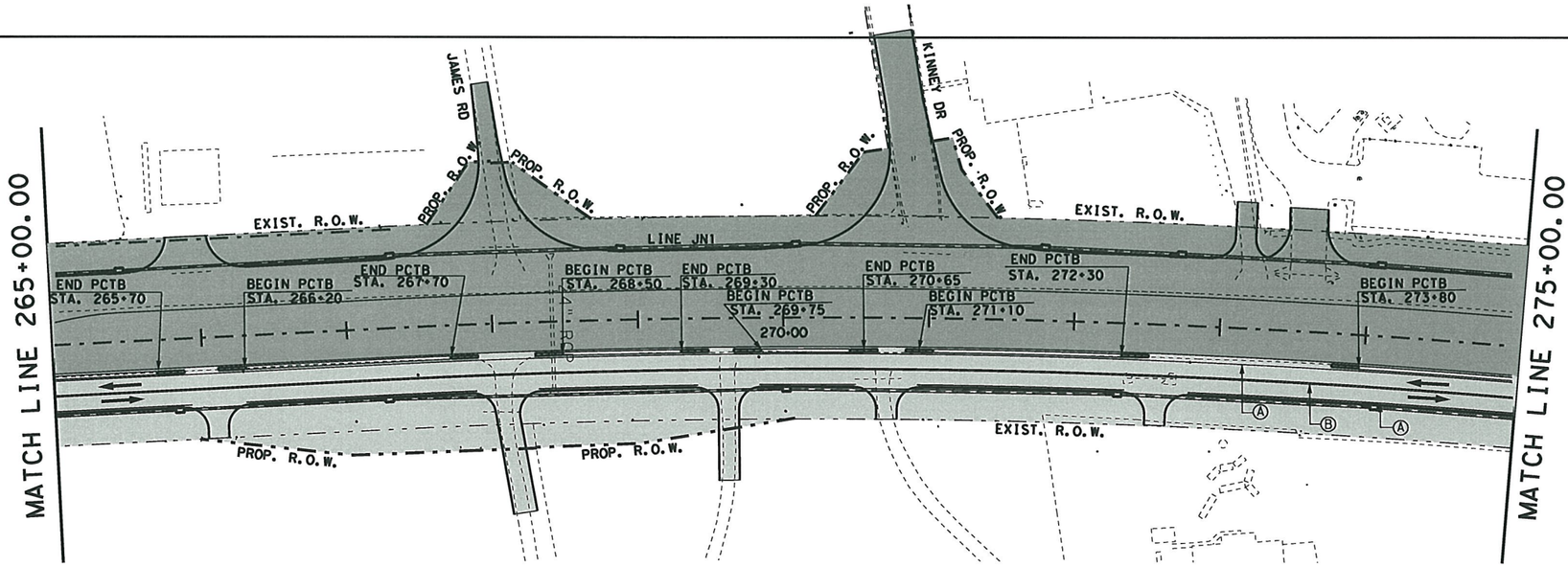

662-2067	662-2099	512-2050	512-2052	545-2050	545-2051
WK ZN PAV MRK REMOV (W) 4" (SLD)	WK ZN PAV MRK REMOV (Y) 4" (SLD)	PORT CTB (MOVE) (F - SHAPE) (TY 1)	PORT CTB (REMOVE) (F - SHAPE) (TY 1)	CRASH CUSH ATTEN (MOVE &RESET) (WORK ZONE)	CRASH CUSH ATTEN (REMOVE) (WORK ZONE)
LF	LF	LF	LF	EA	EA
2760	2760	1380	1380	14	14

HASSAN SAM MOGHADASSI
84231
LICENSED PROFESSIONAL ENGINEER
STATE OF TEXAS

H. Moghadassi, P.E. 7/12/11
Signature of Registrant & Date

SH 289 TCP2*8.dgn

Texas Department of Transportation
© 2011

SH 289
FM 455 TO N BUS 289C
TRAFFIC CONTROL PLAN
PHASE II

SCALE: 1"= 100 Sheet 8 of 10

DESIGN	FED.RD. DIV.NO.	PROJECT NO.		HIGHWAY NO.
SHM	6	SEE TITLE SHEET		SH 289
GRAPHICS	STATE	DISTRICT	COUNTY	SHEET NO.
OE	TEXAS	DALLAS	COLLIN	
CHECK	CONTROL	SECTION	JOB	
SM	0091	03		66
CHECK				

P-201107-01

7/11/2011
I:\dgn\s\sh289\design\sheets\tcp\tcp2\SH 289 TCP2*8.dgn
...\tcp\tcp2\SH 289 TCP2*8.dgn

$USER$
$SCALE$

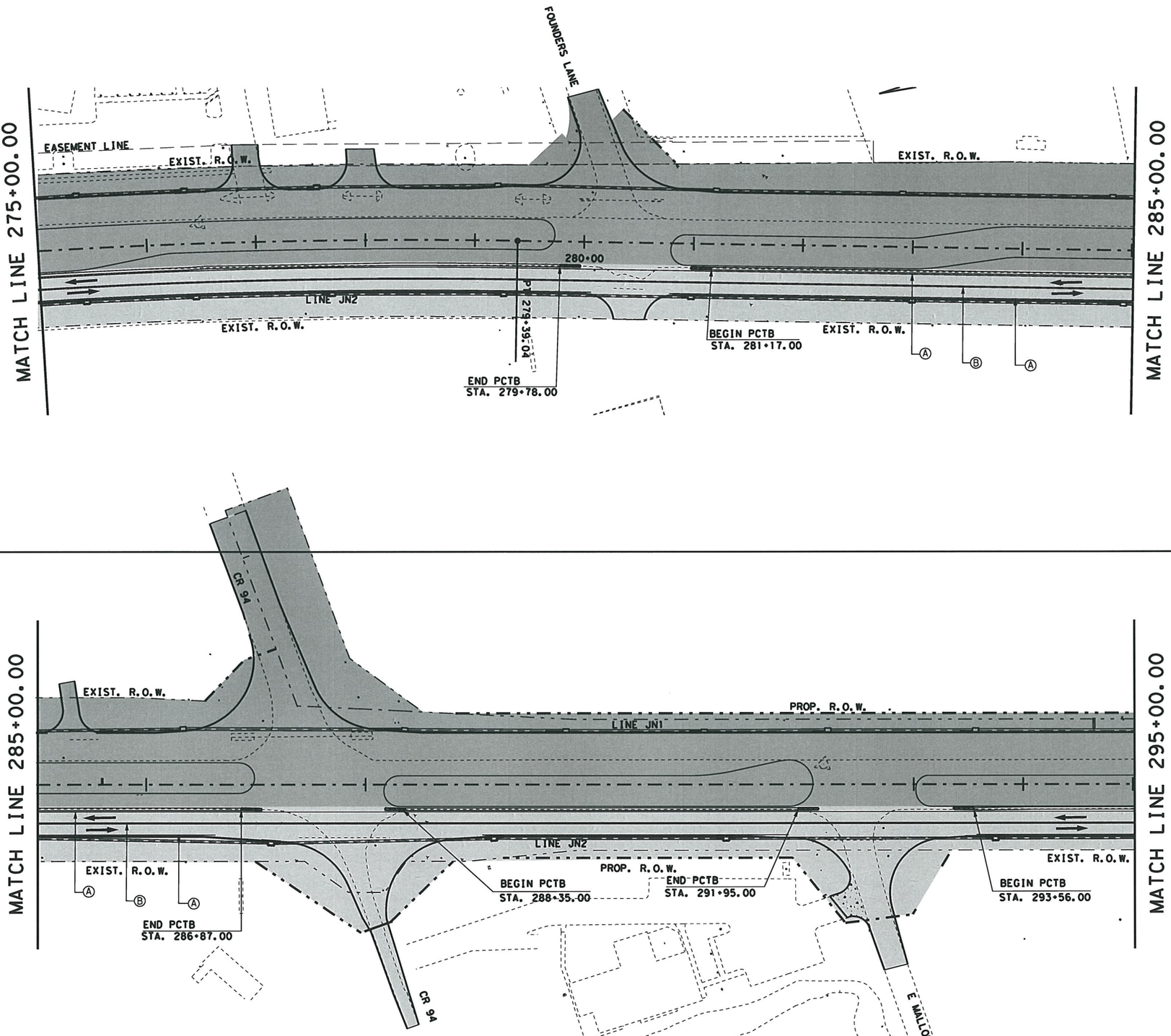

LEGEND

- CONSTRUCTION THIS PHASE
- CONSTRUCTION PREVIOUS PHASE
- PORTABLE CONCRETE TRAFFIC BARRIER (PCTB)
- LOW PROFILE CONCRETE BARRIER (LPCB)
- TEMPORARY CRASH CUSHION (20')
- SIGN
- TYPE III BARRICADE
- (A) WK ZN PAV MRK. REMOV (W) 4" (SLD W/MRKR)
- (B) WK ZN PAV MRK. REMOV (Y) 4" (SLD W/MRKR)
- TEMPORARY TRAFFIC

NOTE:
SEE THE "SEQUENCE OF WORK MISCELLANEOUS DETAILS" FOR CONSTRUCTION PHASING OF DRIVEWAYS AND CROSS STREETS.

662-2067	662-2099	512-2050	512-2052	545-2050	545-2051
WK ZN PAV MRK REMOV (W) 4" (SLD)	WK ZN PAV MRK NON - REMOV (Y) 4" (SLD)	PORT CTB (MOVE) (F - SHAPE) (TY 1)	PORT CTB (REMOVE) (F - SHAPE) (TY 1)	CRASH CUSH ATTEN (MOVE &RESET) (WORK ZONE)	CRASH CUSH ATTEN (REMOVE) (WORK ZONE)
LF	LF	LF	LF	EA	EA
3120	3120	1560	1560	8	8

STATE OF TEXAS
HASSAN SAM MOGHADASSI
84231
LICENSED PROFESSIONAL ENGINEER

H. Moghadassi, P.E. 12/29/11
Signature of Registrant & Date

$FILES$

Texas Department of Transportation
© 2011

SH 289
FM 455 TO N BUS 289C
TRAFFIC CONTROL PLAN
PHASE II

SCALE: 1"= 100 Sheet 9 of 10

DESIGN	FED. RD. DIV. NO.	PROJECT NO.		HIGHWAY NO.
SHM	6	SEE TITLE SHEET		SH 289
GRAPHICS	STATE	DISTRICT	COUNTY	SHEET NO.
OE	TEXAS	DALLAS	COLLIN	
CHECK	CONTROL	SECTION	JOB	
SM	0091	03	P-201107-01	67
CHECK				

$FILEABBREV$

12/29/2011
T:\DALDGN*S\SH289\Design\sheets\TCP\TCP2\SH 289 TCP2*9.dgn

TXDOT
100.0000 ft / IN.

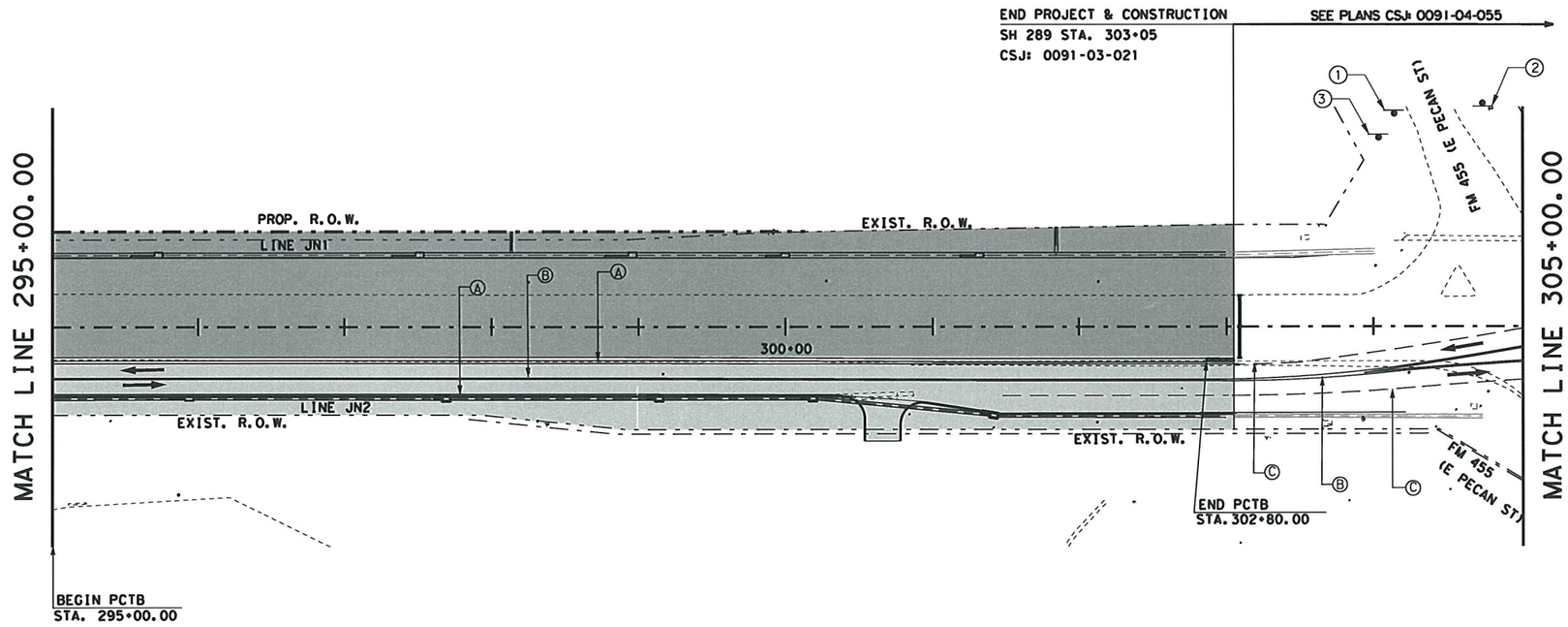

LEGEND

- CONSTRUCTION THIS PHASE
- CONSTRUCTION PREVIOUS PHASE
- PORTABLE CONCRETE TRAFFIC BARRIER (PCTB)
- LOW PROFILE CONCRETE BARRIER (LPCB)
- TEMPORARY CRASH CUSHION (20')
- SIGN
- TYPE III BARRICADE
- (A) WK ZN PAV MRK. REMOV (W) 4" (SLD W/MRKR)
- (B) WK ZN PAV MRK. REMOV (Y) 4" (SLD W/MRKR)
- (C) WK ZN PAV MRK.
- REMOV (W) 4" (BRK) TEMPORARY TRAFFIC

NOTE:
SEE THE "SEQUENCE OF WORK MISCELLANEOUS DETAILS" FOR CONSTRUCTION PHASING OF DRIVEWAYS AND CROSS STREETS.

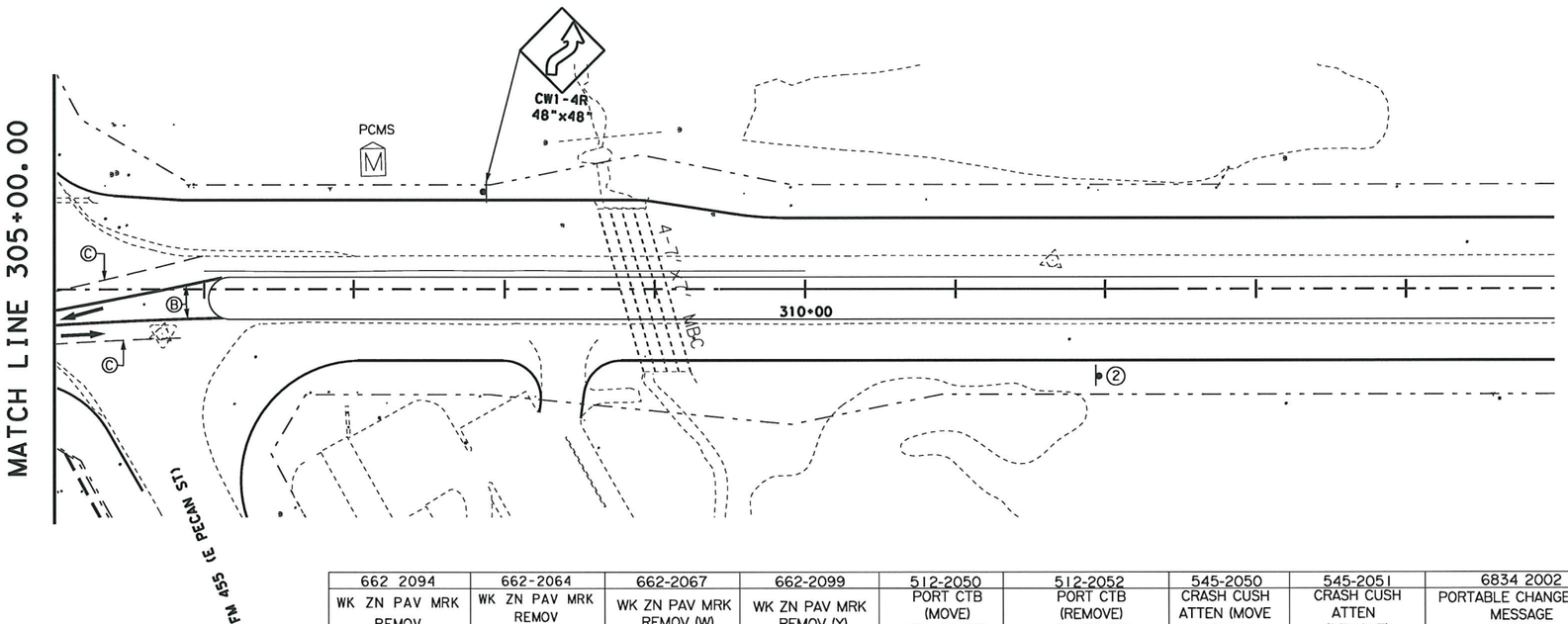

662 2094	662-2064	662-2067	662-2099	512-2050	512-2052	545-2050	545-2051	6834 2002
WK ZN PAV MRK REMOV (W) (WORD)	WK ZN PAV MRK REMOV (W) 4" (BRK)	WK ZN PAV MRK REMOV (W) 4" (SLD)	WK ZN PAV MRK REMOV (Y) 4" (SLD)	PORT CTB (MOVE) (F - SHAPE) (TY 1)	PORT CTB (REMOVE) (F - SHAPE) (TY 1)	CRASH CUSH ATTEN (MOVE &RESET) (WORK ZONE)	CRASH CUSH ATTEN (REMOVE) (WORK ZONE)	PORTABLE CHANGEABLE MESSAGE SIGN
EA	EA	LF	LF	LF	LF	EA	EA	EA
4	830	1560	3080	780	780	1	1	1

HASSAN SAM MOGHADASSI
84231
LICENSED PROFESSIONAL ENGINEER
STATE OF TEXAS

H. Moghadassi, P.E. 7/12/11
Signature of Registrant & Date

SH 289 TCP2*10.dgn

Texas Department of Transportation
© 2011

SH 289
FM 455 TO N BUS 289C
TRAFFIC CONTROL PLAN
PHASE II

SCALE: 1"= 100 Sheet 10 of 10

DESIGN	FED.RD. DIV.NO.	PROJECT NO.		HIGHWAY NO.
SHM	6	SEE TITLE SHEET		SH 289
GRAPHICS OE	STATE	DISTRICT	COUNTY	SHEET NO.
CHECK SM	TEXAS	DALLAS	COLLIN	68
CHECK	CONTROL	SECTION	JOB	
	0091	03	P-201107-01	

7/11/2011
I:\dal\dgn*s\sh289\design\sheets\tcp\tcp2\SH 289 TCP2*10.dgn
...\tcp\tcp2\SH 289 TCP2*10.dgn

TXDOT
150.0000 ft / IN.

CONSTRUCTION THIS PHASE

MAINLANE CONSTRUCTION

TEMPORARY PAVEMENT

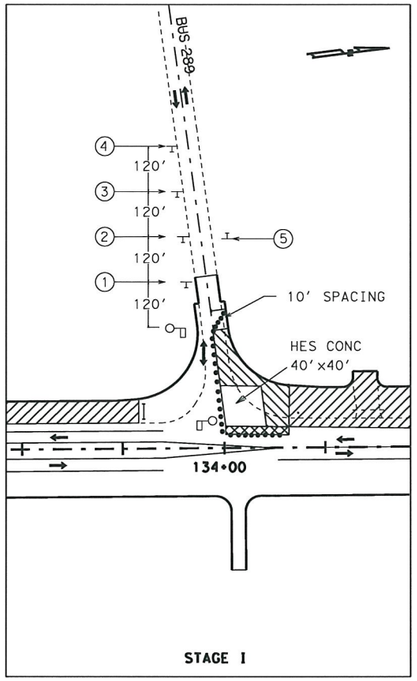

STAGE I

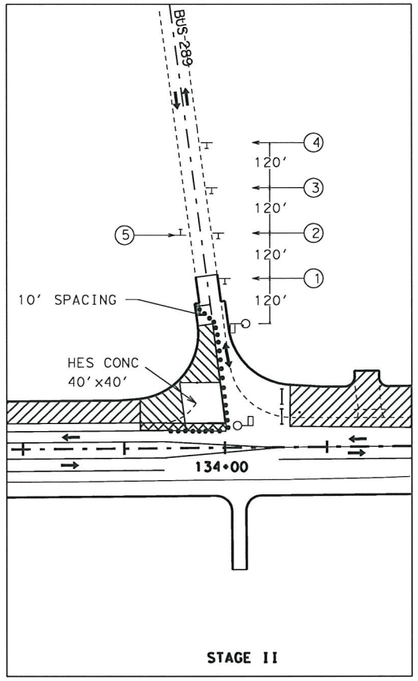

STAGE II

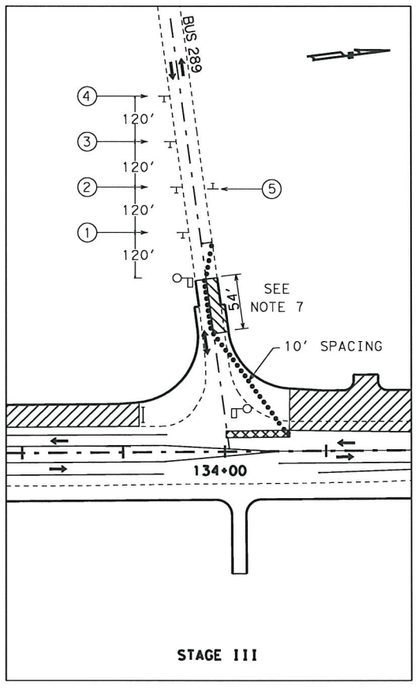

STAGE III

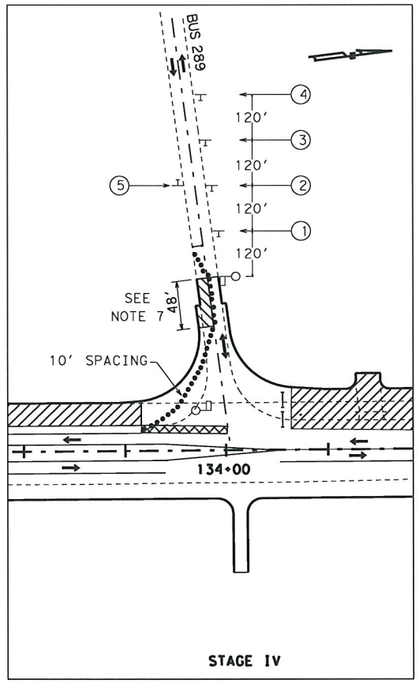

STAGE IV

NOTE:

1. TEMPORARY PAVEMENT AS NEEDED BETWEEN COMPLETED PHASE I AND PHASE II CONSTRUCTION.
2. USE HES CONCRETE WHERE AS SHOWN ON PLAN.
3. SUBMIT DETAILED TRAFFIC CONTROL PLAN. APPROVAL IS REQUIRED BEFORE PLAN IMPLEMENTATION.
4. PLACE TEMPORARY ASPHALT PAVEMENT AS REQUIRED TO FACILITATE TRAFFIC MOVEMENT ACROSS THE CONSTRUCTION AREA. THIS PAVEMENT IS SUBSIDIARY TO ITEM 502.
5. PROVIDE NORMAL OPERATION WITH TWO LANES OF TRAFFIC AT THE END OF EACH WORKDAY. PLACE CHANNELIZING DEVICES AS REQUIRED TO GUIDE TRAFFIC TO AND FROM EXISTING PAVEMENT.
6. COVER SIGNS NOT IN USE AT THE END OF EACH WORKDAY.
7. SEE TYPICAL SECTIONS FOR PAVEMENT LAYER THICKNESSES AND MATERIALS.
8. AFTER COMPLETION OF STAGE IV, REMOVE TEMPORARY PAVEMENT AND CONSTRUCT PERMENANT PAVEMENT USING HES CONCRETE.

LEGEND

① 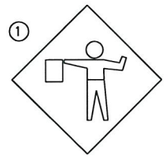

CW20-7A
48" X 48"

②

CW20-7B
48" X 48"

③ 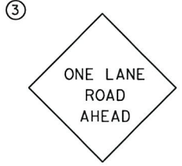

CW20-4D
48" X 48"

④ 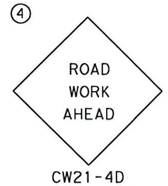

CW21-4D
48" X 48"

⑤ 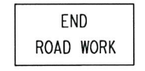

G20-2A
48" X 24"

• • • CHANNELIZING DEVICES

⊢ ⊢ ⊢ TYPE II BARRICADE

STATE OF TEXAS
HASSAN SAM MOGHADASSI
84231
LICENSED
PROFESSIONAL ENGINEER

H. Moghadassi, P.E. 7/12/11
Signature of Registrant & Date

BUS289 Inter*TCP.dgn

Texas Department of Transportation
© 2011

SH 289
FM 455 TO N BUS 289C
TCP DETAILS FOR BUS 289
@
STA. 133+95.50

SCALE: NTS SHEET 1 OF 4

DESIGN	FED. RD. DIV. NO.	STATE PROJECT		HIGHWAY NO.
SHM	6			SH289
GRAPHICS SHM	STATE	DISTRICT	COUNTY	SHEET NO.
CHECK SM	TEXAS	DALLAS	COLLIN	69
CHECK SM	CONTROL	SECTION	JOB	
	0091	03	201	

P-201107-01

7/11/2011
T:\DALDGN\S\SH289\Design\sheets\DRWY\DETAIL INTERSECTIONS\BUS289 Inter*TCP.dgn
...\BUS289 Inter*TCP.dgn

TXDOT
150.0000 ft / IN.

CONSTRUCTION THIS PHASE

MAINLANE CONSTRUCTION

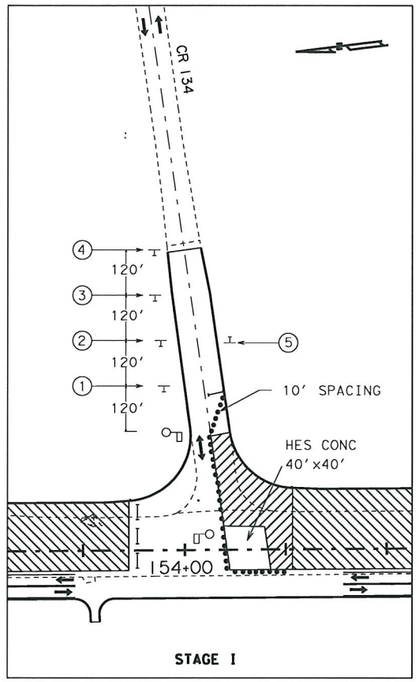

STAGE I

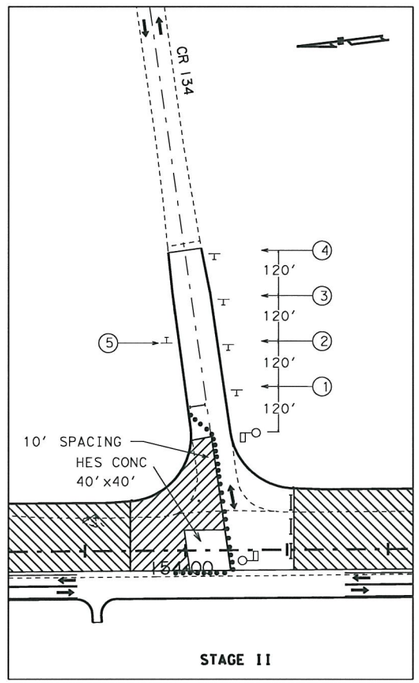

STAGE II

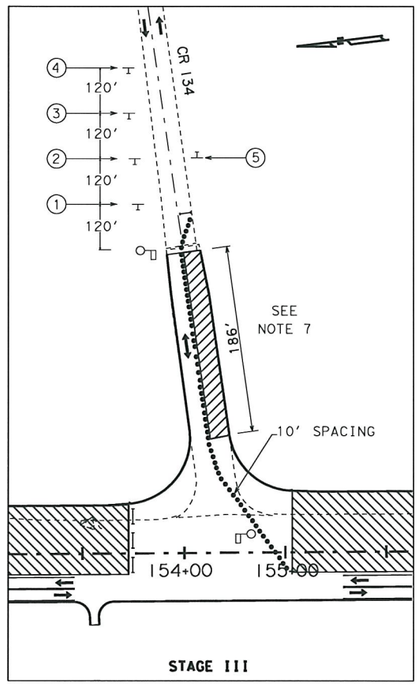

STAGE III

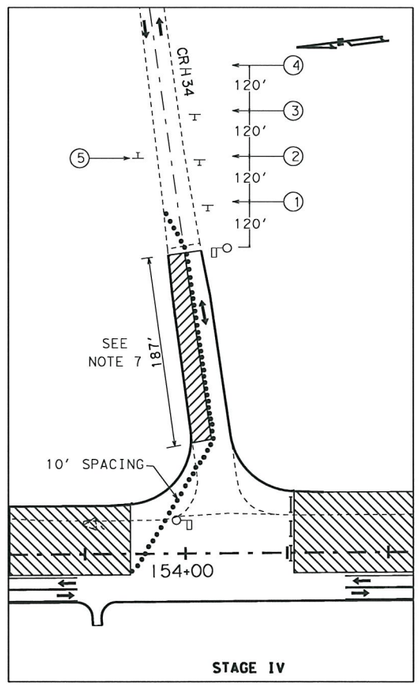

STAGE IV

NOTE:

1. TEMPORARY PAVEMENT AS NEEDED BETWEEN COMPLETED PHASE I AND PHASE II CONSTRUCTION.
2. USE HES CONCRETE AS SHOWN ON PLAN.
3. SUBMIT DETAILED TRAFFIC CONTROL PLAN. APPROVAL IS REQUIRED BEFORE PLAN IMPLEMENTATION.
4. PLACE TEMPORARY ASPHALT PAVEMENT AS REQUIRED TO FACILITATE TRAFFIC MOVEMENT ACROSS THE CONSTRUCTION AREA. THIS PAVEMENT IS SUBSIDIARY TO ITEM 502.
5. PROVIDE NORMAL OPERATION WITH TWO LANES OF TRAFFIC AT THE END OF EACH WORKDAY. PLACE CHANNELIZING DEVICES AS REQUIRED TO GUIDE TRAFFIC TO AND FROM EXISTING PAVEMENT.
6. COVER SIGNS NOT IN USE AT THE END OF EACH WORKDAY.
7. SEE TYPICAL SECTIONS FOR PAVEMENT LAYER THICKNESSES AND MATERIALS.
8. AFTER COMPLETION OF STAGE IV, REMOVE TEMPORARY PAVEMENT AND CONSTRUCT PERMENANT PAVEMENT USING HES CONCRETE.

LEGEND

① 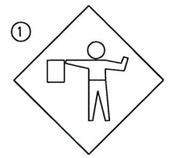

CW20-7A
48" X 48"

②

CW20-7B
48" X 48"

③ 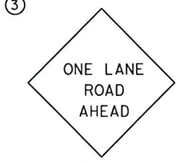

CW20-4D
48" X 48"

④

CW21-4D
48" X 48"

⑤

G20-2A
48" X 24"

• • • CHANNELIZING DEVICES

I I I TYPE II BARRICADE

CR134 Inter*TCP.dgn

STATE OF TEXAS
HASSAN SAM MOGHADASSI
84231
LICENSED
PROFESSIONAL ENGINEER

H. Moghadassi, P.E. 7/12/11
Signature of Registrant & Date

Texas Department of Transportation
© 2011

SH 289
FM 455 TO N BUS 289C
TCP DETAILS FOR CR 134
@
STA. 154+42.50

SCALE: NTS SHEET 2 OF 4

DESIGN	FED.RD. DIV.NO.	STATE PROJECT		HIGHWAY NO.
SHM	6			SH289
GRAPHICS	STATE	DISTRICT	COUNTY	SHEET NO.
SHM	TEXAS	DALLAS	COLLIN	70
CHECK SM	CONTROL	SECTION	JOB	
CHECK SM	0091	03	2011	

P-201107-01

...\CR134 Inter*TCP.dgn

7/11/2011
I:\dal\dgn*s\sh289\design\sheets\DRWY\DETAIL INTERSECTIONS\CR134 Inter*TCP.dgn

TXDOT
150.0000 ft / IN.

CONSTRUCTION THIS PHASE

MAINLANE CONSTRUCTION

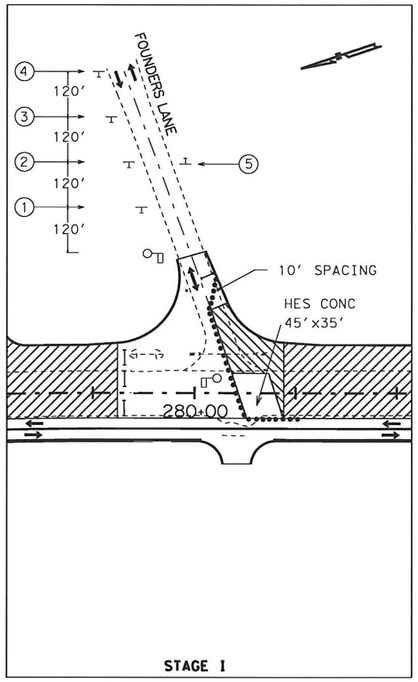

STAGE I

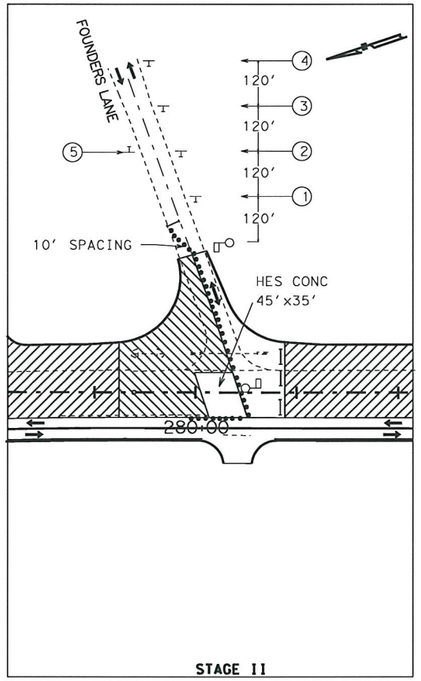

STAGE II

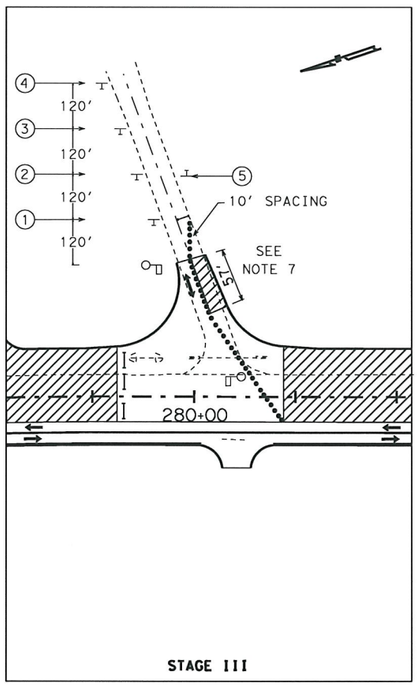

STAGE III

NOTE:

1. TEMPORARY PAVEMENT AS NEEDED BETWEEN COMPLETED PHASE I AND PHASE II CONSTRUCTION.
2. USE HES CONCRETE AS SHOWN ON PLAN.
3. SUBMIT DETAILED TRAFFIC CONTROL PLAN. APPROVAL IS REQUIRED BEFORE PLAN IMPLEMENTATION.
4. PLACE TEMPORARY ASPHALT PAVEMENT AS REQUIRED TO FACILITATE TRAFFIC MOVEMENT ACROSS THE CONSTRUCTION AREA. THIS PAVEMENT IS SUBSIDIARY TO ITEM 502.
5. PROVIDE NORMAL OPERATION WITH TWO LANES OF TRAFFIC AT THE END OF EACH WORKDAY. PLACE CHANNELIZING DEVICES AS REQUIRED TO GUIDE TRAFFIC TO AND FROM EXISTING PAVEMENT.
6. COVER SIGNS NOT IN USE AT THE END OF EACH WORKDAY.
7. SEE TYPICAL SECTIONS FOR PAVEMENT LAYER THICKNESSES AND MATERIALS.
8. AFTER COMPLETION OF STAGE IV, REMOVE TEMPORARY PAVEMENT AND CONSTRUCT PERMENANT PAVEMENT USING HES CONCRETE.

LEGEND

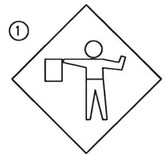

① CW20-7A
48" X 48"

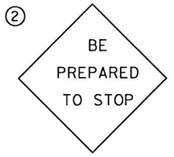

② CW20-7B
48" X 48"

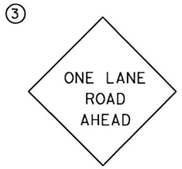

③ CW20-4D
48" X 48"

④ CW21-4D
48" X 48"

⑤ G20-2A
48" X 24"

• • • CHANNELIZING DEVICES

TYPE II BARRICADE

STATE OF TEXAS
HASSAN SAM MOGHADASSI
84231
LICENSED
PROFESSIONAL ENGINEER

H. Moghadassi ,P.E. 7/12/11
Signature of Registrant & Date

Founders Lane Inter*TCP.dgn

Texas Department of Transportation
© 2011

SH 289
FM 455 TO N BUS 289C
TCP DETAILS FOR FOUNDERS LANE
@
STA. 280+45.50

SCALE: NTS SHEET 3 OF 4

DESIGN	FED. RD. DIV. NO.	STATE PROJECT		HIGHWAY NO.
SHM	6			SH289
GRAPHICS SHM	STATE	DISTRICT	COUNTY	SHEET NO.
CHECK SM	TEXAS	DALLAS	COLLIN	71
CHECK SM	CONTROL 0091	SECTION 03	JOB 201	

P-201107-01

7/11/2011
t:\dal\dgn*s\sh289\design\sheets\DRWY\DETAIL INTERSECTIONS\Founders Lane Inter*TCP.dgn
...\Founders Lane Inter*TCP.dgn

TXDOT
150.0000 ft / IN.

CONSTRUCTION THIS PHASE

MAINLANE CONSTRUCTION

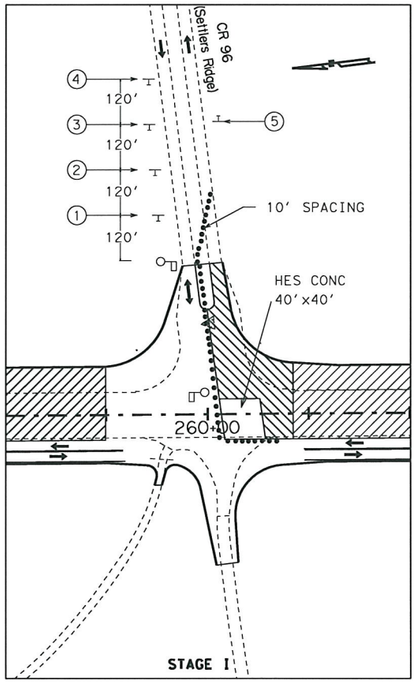

STAGE I

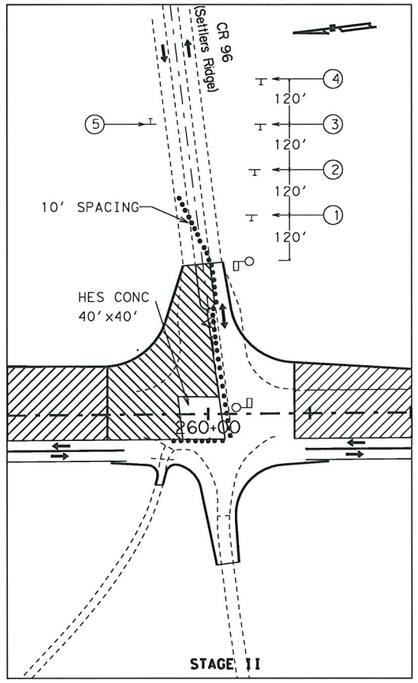

STAGE II

NOTE:

1. TEMPORARY PAVEMENT AS NEEDED BETWEEN COMPLETED PHASE I AND PHASE II CONSTRUCTION.
2. USE HES CONCRETE FOR STAGE I AND II CONSTRUCTION.
3. SUBMIT DETAILED TRAFFIC CONTROL PLAN. APPROVAL IS REQUIRED BEFORE PLAN IMPLEMENTATION.
4. PLACE TEMPORARY ASPHALT PAVEMENT AS REQUIRED TO FACILITATE TRAFFIC MOVEMENT ACROSS THE CONSTRUCTION AREA. THIS PAVEMENT IS SUBSIDIARY TO ITEM 502.
5. PROVIDE NORMAL OPERATION WITH TWO LANES OF TRAFFIC AT THE END OF EACH WORKDAY. PLACE CHANNELIZING DEVICES AS REQUIRED TO GUIDE TRAFFIC TO AND FROM EXISTING PAVEMENT.
6. COVER SIGNS NOT IN USE AT THE END OF EACH WORKDAY.
7. SEE TYPICAL SECTIONS FOR PAVEMENT LAYER THICKNESSES AND MATERIALS.
8. AFTER COMPLETION OF STAGE IV, REMOVE TEMPORARY PAVEMENT AND CONSTRUCT PERMENANT PAVEMENT USING HES CONCRETE.

LEGEND

① 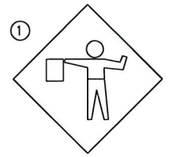

CW20-7A
48" X 48"

②

CW20-7B
48" X 48"

③ 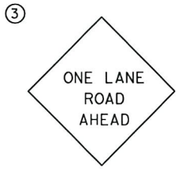

CW20-4D
48" X 48"

④

CW21-4D
48" X 48"

⑤ 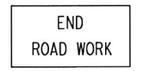

G20-2A
48" X 24"

• • • CHANNELIZING DEVICES

⊢ ⊢ ⊢ TYPE II BARRICADE

Settlers Ridge Inter*TCP.dgn

STATE OF TEXAS
HASSAN SAM MOGHADASSI
84231
LICENSED
PROFESSIONAL ENGINEER

H. Moghadassi , P.E. 7/12/11
Signature of Registrant & Date

Texas Department of Transportation
© 2011

SH 289
FM 455 TO N BUS 289C
TCP DETAILS FOR CR 96 (Settlers Ridge)
@
STA. 260+13.00

SCALE: NTS SHEET 4 OF 4

DESIGN	FED. RD. DIV. NO.	STATE PROJECT		HIGHWAY NO.
SHM	6			SH289
GRAPHICS	STATE	DISTRICT	COUNTY	SHEET NO.
SHM	TEXAS	DALLAS	COLLIN	72
CHECK	CONTROL	SECTION	JOB	
SM	0091	03	001	
CHECK				
SM				

P-201107-01

7/11/2011
t:\dal\dgn\sh289\design\sheets\DRWY\DETAIL INTERSECTIONS\Settlers Ridge Inter*TCP.dgn
...\Settlers Ridge Inter*TCP.dgn

TXDOT
100.0000 ft / IN.

LEGEND

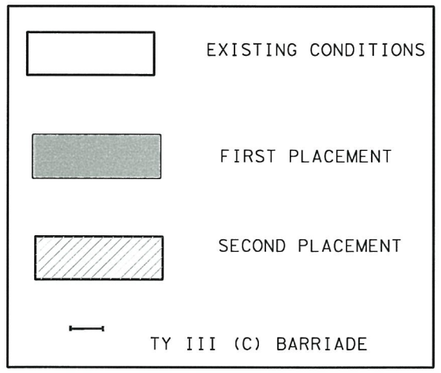

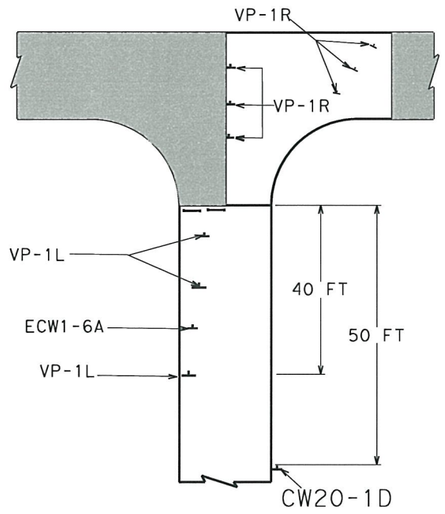

STAGE A

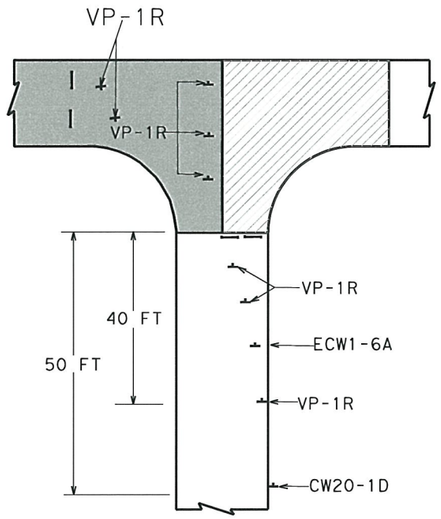

STAGE B

TYPICAL CONSTRUCTION & WARNING SIGNS AT DRIVEWAYS AND CROSS STREETS

NOTES:

1. THE CONTRACTOR SHALL HAVE THE OPTION OF REVERSING STAGES OUTLINED TO EXPIDITE CONSTRUCTION OF PROPOSED PAVEMENT AS NEEDED FOR DRIVEWAYS AND NON-SIGNALIZED INTERSECTIONS

2. CONTRACTOR SHALL CONTACT THE ENGINEER AND PROPERTY OWNERS BEFORE DISTURBING EXISTING DRIVEWAYS. IF PROPERTY HAS MORE THAN ONE DRIVEWAY, CONTRACTOR SHALL NOT DISTURB MORE THAN ONE DRIVEWAY AT A TIME.

3. FOR PROPERTIES WITH ONLY ONE DRIVEWAY, CONTRACTOR SHALL PHASE CONSTRUCTION. PROVIDE TEMPORARY ACCESS AS DIRECTED BY THE ENGINEER. COST IS NOT PAID FOR DIRECTLY BUT IS CONSIDERED SUBSIDIARY TO ITEM 502 " BARRICADES, SIGNS, AND TRAFFIC HANDLING".

4. DRIVEWAYS SHALL BE OPENED TO TRAFFIC AS SOON AS COMPLETED WITH VERTICAL PANNELS PLACED ALONG THE OUTSIDE TO GUIDE TRAFFIC TO AND FROM THE EXISTING PAVEMENT.

STATE OF TEXAS
HASSAN SAM MOGHADASSI
84231
LICENSED
PROFESSIONAL ENGINEER

H. Moghadassi ,P.E. 7/12/11
Signature of Registrant & Date

TCPMISCDETAILS.dgn

Texas Department of Transportation
© 2011

SH 289
TCP MISCELLANEOUS DETAILS

NTS

DESIGN	FED.RD. DIV.NO.	STATE PROJECT NO.		HIGHWAY NO.
SHM	6	(SEE TITLE SHEET)		SH 289
GRAPHICS	STATE	DISTRICT	COUNTY	SHEET NO.
SHM	TEXAS	18	COLLIN	73
CHECK	CONTROL	SECTION	JOB	
CHECK	0091	03	201	

P-201107-01

7/11/2011
T:\DALDGN*S\SH289\Design\sheets\MISC\TCPMISCDETAILS.dgn
...\sheets\MISC\TCPMISCDETAILS.dgn

DISCLAIMER:
The use of this standard is governed by the "Texas Engineering Practice Act". No warranty of any kind is made by TxDOT for any purpose whatsoever. TxDOT assumes no responsibility for the conversion of this standard to other formats or for incorrect results or damages resulting from its use.

Barricade and Construction (BC) Standard Sheets General Notes:

1. The Barricade and Construction Standard Sheets (BC sheets) are intended to show typical examples for placement of temporary traffic control devices, construction pavement markings, and typical work zone signs. The information contained in these sheets meet or exceed the requirements shown in the "Texas Manual on Uniform Traffic Control Devices" (TMUTCD).
2. The development and design of the Traffic Control Plan (TCP) is the responsibility of the Engineer.
3. The Contractor may propose changes to the TCP that are signed and sealed by a licensed professional engineer for approval. The Engineer may develop, sign and seal Contractor proposed changes.
4. The Contractor is responsible for installing and maintaining the traffic control devices as shown in the plans. The Contractor may not move or change the approximate location of any device without the approval of the Engineer.
5. Geometric design of lane shifts and detours should, when possible, meet the applicable design criteria contained in manuals such as the American Association of State Highway and Transportation Officials (AASHTO), "A Policy on Geometric Design of Highways and Streets", the TxDOT "Roadway Design Manual" or engineering judgment.
6. When projects abut, the Engineer(s) may omit the END ROAD WORK, TRAFFIC FINES DOUBLE, and other advance warning signs if the signing would be redundant and the work areas appear continuous to the motorists. If the adjacent project is completed first, the Contractor shall erect the necessary warning signs as shown on these sheets, the TCP sheets or as directed by the Engineer. The BEGIN ROAD WORK NEXT X MILES sign shall be revised to show appropriate work zone distance.
7. The Engineer may require duplicate warning signs on the median side of divided highways where median width will permit and traffic volumes justify the signing.
8. All signs shall be constructed in accordance with the details found in the "Standard Highway Sign Designs for Texas," latest edition. Sign details not shown in this manual shall be shown in the plans or the Engineer shall provide a detail to the Contractor before the sign is manufactured.
9. The temporary traffic control devices shown in the illustrations of the BC sheets are examples. As necessary, the Engineer will determine the most appropriate traffic control devices to be used.
10. As shown on BC(2), the OBEY WARNING SIGNS STATE LAW sign and the WORK ZONE TRAFFIC FINES DOUBLE sign with plaque shall be erected in advance of the CSJ limits. The BEGIN ROAD WORK NEXT X MILES, CONTRACTOR and END ROAD WORK signs shall be erected at or near the CSJ limits.
11. Except for devices required by Note 10, traffic control devices should be in place only while work is actually in progress or a definite need exists.
12. The Engineer has the final decision on the location of all traffic control devices.
13. Inactive equipment and work vehicles, including workers' private vehicles must be parked away from travel lanes. They should be as close to the right-of-way line as possible, or located behind a barrier or guardrail, or as approved by the Engineer.

Worker Safety Apparel Notes:

1. Workers on foot who are exposed to traffic or to construction equipment within the right-of-way shall wear high-visibility safety apparel meeting the requirements of ISEA "American National Standard for High-Visibility Apparel" labeled as ANSI 107-2004 standard performance for Class 2 or 3 risk exposure. Class 3 garments should be considered for high traffic volume work areas or night time work.

Only pre-qualified products shall be used. The "Compliant Work Zone Traffic Control Devices List" (CWZTCD) describes prequalified products and their sources and may be found on-line at the web address given below or by contacting:

Texas Department of Transportation
Traffic Operations Division - TE
Phone (512) 416-3134

WEB ADDRESSES FOR REFERENCED DOCUMENTS

Compliant Work Zone Traffic Control Devices List (CWZTCD)
http://www.txdot.gov/publications/traffic.htm

Texas Manual on Uniform Traffic Control Devices (TMUTCD)
http://www.txdot.gov/publications/traffic.htm

Standard Highway Sign Designs for Texas (SHSD)
http://www.txdot.gov/publications/traffic.htm

Traffic Engineering Standard Sheets
http://www.txdot.gov/business/disclaim.htm

Material Producer List
http://www.txdot.gov/business/producer-list.htm

Departmental Material Specifications (DMS)
http://www.txdot.gov/services/construction/material-specifications/

Roadway Design Manual
http://www.txdot.gov/services/general-services/manuals.htm

Texas Department of Transportation
Traffic Operations Division

BARRICADE AND CONSTRUCTION GENERAL NOTES AND REQUIREMENTS

1 of 12 BC(1)-07

©TxDOT 11-4-02

DN: TXDOT	CK: TXDOT	DW: TXDOT	CK: TXDOT
CONT	SECT	JOB	HIGHWAY
0091	03	021	SH289
DIST	COUNTY		SHEET NO.
18			74

REVISIONS
4-03
9-07

DATE:
FILE:

P 201107 01

DISCLAIMER:
The use of this standard is governed by the "Texas Engineering Practice Act". No warranty of any kind is made by TxDOT or any employee for any purpose and TxDOT assumes no responsibility for the conversion of this standard to other formats or for incorrect results or damages resulting from its use.

TYPICAL LOCATION OF CROSSROAD SIGNS

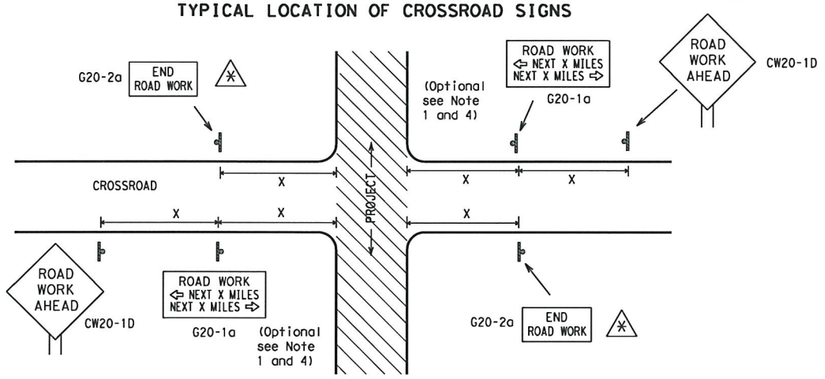

⁂ May be mounted on back of CW20-1D sign with approval of engineer. (See note 2 below)

1. The typical minimum signing on a crossroad approach should be a CW20-1D ROAD WORK AHEAD sign and a G20-2a END ROAD WORK sign, unless noted otherwise in plans.
2. The Engineer may use the reduced size 36" x 36" ROAD WORK AHEAD (CW20-1D) sign mounted back to back with the reduced size 36" x 18" END ROAD WORK (G20-2a) sign on low volume crossroads (see Note 4 under "Typical Construction Warning Sign Size and Spacing"). See the "Standard Highway Sign Designs for Texas" manual for sign details. The Engineer may omit the advance warning signs on low volume crossroads. The Engineer will determine whether a road is low volume. This information shall be shown in the plans.
3. Based on existing field conditions, the Engineer/Inspector may require additional signs such as FLAGGER AHEAD, LOOSE GRAVEL, or other appropriate signs. When additional signs are required, these signs will be considered part of the minimum requirements. The Engineer/Inspector will determine the proper location and spacing of any sign not shown on the BC sheets, Traffic Control Plan sheets or the Work Zone Standard Sheets.
4. The G20-1a sign shall be required at high volume crossroads to advise motorists of the length of construction in either direction from the intersection. The Engineer will determine whether a roadway is considered high volume.
5. Additional traffic control devices may be shown elsewhere in the plans for higher volume crossroads.
6. When work occurs in the intersection area, appropriate traffic control devices, as shown elsewhere in the plans or as determined by the Engineer/Inspector, shall be in place.

T-INTERSECTION

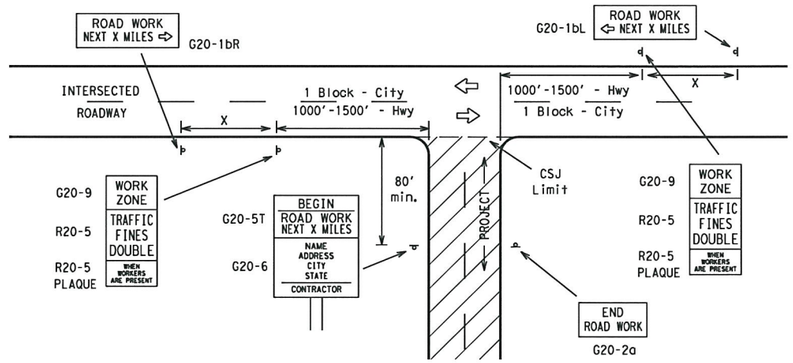

CSJ LIMITS AT T-INTERSECTION

1. The Engineer will determine the types and location of any additional traffic control devices, such as a flagger and accompanying signs, or other signs, that should be used when work is being performed at or near an intersection.
2. If construction closes the road at a T-intersection the Contractor shall place the G20-6 "Contractor Name" sign behind the Type III Barricades for the road closure (see BC(10) also). The G20-1bL and G20-1bR signs shall be replaced by the detour signing called for in the plans.

TYPICAL CONSTRUCTION WARNING SIGN SIZE AND SPACING [1,5,6]

SIZE

Sign Number or Series	Conventional Road	Expressway/ Freeway
CW20 [4], CW21, CW22, CW23, CW25	48" x 48"	48" x 48"
CW1, CW2, CW7, CW8, CW9, CW11, CW14	36" x 36"	48" x 48"
CW3, CW4, CW5, CW6, CW8-3, CW10, CW12	48" x 48"	48" x 48"

SPACING

Posted Speed	Sign Spacing "X" Δ
MPH	Feet (Apprx.)
30	120
35	160
40	240
45	320
50	400
55	500 [2]
60	600 [2]
65	700 [2]
70	800 [2]
75	900 [2]
80	1000 [2]
*	* [3]

* For typical sign spacings on divided highways, expressways and freeways, see Part 6 of the "Texas Manual on Uniform Traffic Control Devices" (TMUTCD) typical application diagrams or TCP Standard Sheets.

Δ Minimum distance from work area to first Advance Warning sign nearest the work area and/or distance between each additional sign.

General Notes:

1. Special or larger size signs may be used as necessary.
2. Distance between signs should be increased as required to have 1500 feet advance warning.
3. Distance between signs should be increased as required to have ½ mile or more advance warning.
4. 36" x 36" ROAD WORK AHEAD (CW20-1D) signs may be used on low volume crossroads at the discretion of the Engineer. See Note 2 under "Typical Location of Crossroad Signs".
5. Only diamond shaped warning sign sizes are indicated.
6. See sign size listing in "TMUTCD", Sign Appendix or the "Standard Highway Sign Designs for Texas" manual for complete list of available sign design sizes.

WORK AREAS IN MULTIPLE LOCATIONS WITHIN CSJ LIMITS

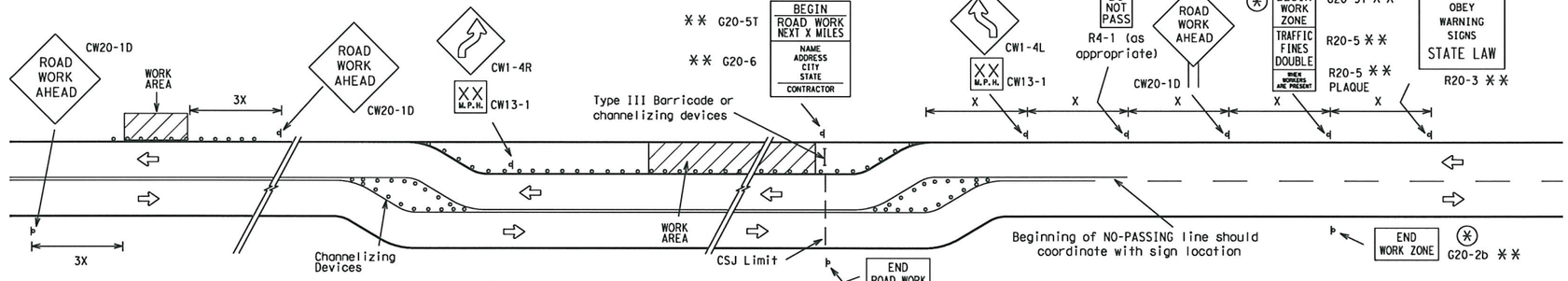

When extended distances occur between minimal work areas, the Engineer/Inspector should ensure additional Road Work Ahead (CW20-1D) signs are placed in advance of these work areas to remind drivers they are still within the project limits. See the applicable TCP sheets for exact location and spacing of signs and channelizing devices.

SAMPLE LAYOUT OF SIGNING FOR WORK BEGINNING AT THE CSJ LIMITS

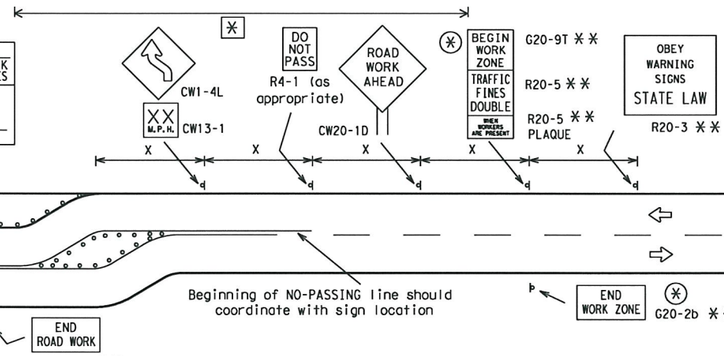

SAMPLE LAYOUT OF SIGNING FOR WORK BEGINNING DOWNSTREAM OF THE CSJ LIMITS

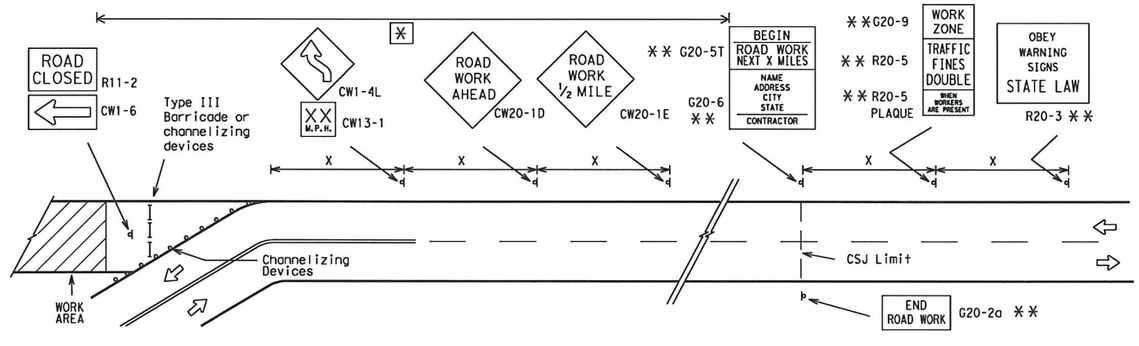

NOTES

The Contractor shall determine the appropriate distance to be placed on the G20-1 series signs and G20-5T sign for each specific project. This distance shall replace the "X" and shall be rounded to the nearest whole mile with the approval of the Engineer. No decimals shall be used.

⁂ The G20-9T and G20-2b shall be used when advance signs are required outside the CSJ Limits. They inform the motorist of entering or leaving a work zone where traffic fines may double if workers are present.

** Required CSJ Limit signing. See Note 10 on BC(1).

⁂ Area for placement of "ROAD WORK AHEAD" sign and other signs or devices as called for on the Traffic Control Plan.

LEGEND

- Sign
- O O Channelizing Devices
- Type III Barricade
- X See Typical Construction Warning Sign Size and Spacing chart or the TMUTCD for sign spacing requirements.

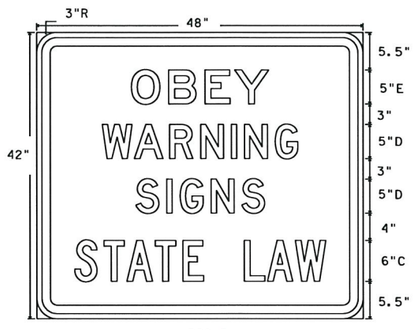

R20-3
Legend/Border - Black
Background - White

Texas Department of Transportation
Traffic Operations Division

BARRICADE AND CONSTRUCTION PROJECT LIMIT STANDARD

2 of 12 BC(2)-07

© TxDOT 11-4-02

DN: TXDOT	CK: TXDOT	DW: TXDOT	CK: TXDOT
CONT	SECT	JOB	HIGHWAY
0091	03	021	SH289
DIST	COUNTY		SHEET NO.
18	HAYS		75

9-07 REVISIONS

DATE:
FILE:

P-201107-01

DISCLAIMER: The use of this standard is governed by the "Texas Engineering Practice Act". No warranty of any kind is made by TxDOT for any purpose whatsoever. TxDOT assumes no responsibility for the conversion of this standard to other formats or for incorrect results or damages resulting from its use.

TYPICAL APPLICATION OF WORK ZONE SPEED LIMIT SIGNS

Work zone speed limits shall be regulatory, established in accordance with the "Procedures for Establishing Speed Zones," and approved by the Texas Transportation Commission, or by City Ordinance when within Incorporated City Limits.

Reduced speeds should only be posted in the vicinity of work activity and not throughout the entire project.

Regulatory work zone speed signs (R2-1) shall be removed or covered during periods when they are not needed.

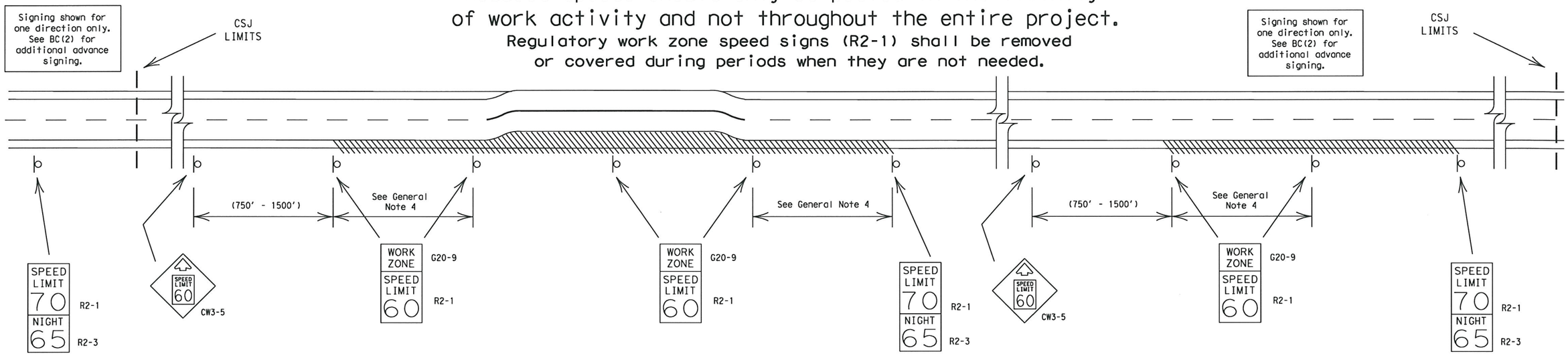

GUIDANCE FOR USE:

LONG/INTERMEDIATE TERM WORK ZONE SPEED LIMITS

This type of work zone speed limit should be included on the design of the traffic control plans when restricted geometrics with a lower design speed are present in the work zone and modification of the geometrics to a higher design speed is not feasible.

Long/Intermediate Term Work Zone Speed Limit signs, when approved as described above, should be posted and visible to the motorist when work activity is present. Work activity may also be defined as a change in the roadway that requires a reduced speed for motorists to safely negotiate the work area, including:

a) rough road or damaged pavement surface
b) substantial alteration of roadway geometrics (diversions)
c) construction detours
d) grade
e) width
f) other conditions readily apparent to the driver

As long as any of these conditions exist, the work zone speed limit signs should remain in place.

SHORT TERM WORK ZONE SPEED LIMITS

This type of work zone speed limit should be included on the design of the traffic control plans when workers or equipment are not behind concrete barrier, when work activity is within 15 feet of pavement edge or actually on the pavement.

Short Term Work Zone Speed Limit signs should be posted and visible to the motorists only when work activity is present. When work activity is not present, signs shall be removed or covered.
(See Removing or Covering on BC(4)).

GENERAL NOTES:

1. Regulatory work zone speed limits should be used only for sections of construction projects where speed control is of major importance.
2. Regulatory work zone speed limit signs shall be placed on supports at a 7 foot minimum mounting height.
3. Speed zone signs are illustrated for one direction of travel and are normally posted for each direction of travel.
4. Frequency of work zone speed limit signs should be:
   40 mph and greater 0.2 to 2 miles
   35 mph and less 0.2 to 1 mile
5. Regulatory speed limit signs shall have black legend and border on a white reflective background (See "Reflective Sheeting" on BC(4)).
6. Fabrication, errection and maintenance of the CW3-5 sign, G20-9 plaque and the R2-1 and R2-3 signs shall not be paid for directly, but shall be considered subsidiary to Item 502.
7. Turning signs from view, laying signs over or down will not be allowed, unless otherwise noted.
8. Techniques that may help reduce traffic speeds include but are not limited to:
   A. Law enforcement.
   B. Flagger stationed next to sign.
   C. Portable changeable message sign (PCMS).
   D. Low-power (drone) radar transmitter.
   E. Speed monitor trailers or signs.
9. Speeds shown on details above are for illustration only. Work Zone Speed Limits should only be posted as approved for each project.

Texas Department of Transportation
Traffic Operations Division

BARRICADE AND CONSTRUCTION WORK ZONE SPEED LIMIT STANDARD

3 of 12 BC(3)-07

©TxDOT 11-4-02

DN: TXDOT	CK: TXDOT	DW: TXDOT	CK: TXDOT
9-07 REVISIONS	CONT	SECT	JOB	HIGHWAY
	0091	03	021	SH289
	DIST	COUNTY		SHEET NO.
	18	TRAVIS		76

DATE:
FILE:

P-201107-01

DISCLAIMER:
The use of this standard is governed by the "Texas Engineering Practice Act". No warranty of any kind is made by TxDOT for any purpose whatsoever. TxDOT assumes no responsibility for the use of this standard to other formats or for incorrect results or damages resulting from its use.

TYPICAL MINIMUM CLEARANCES FOR LONG TERM AND INTERMEDIATE TERM SIGNS

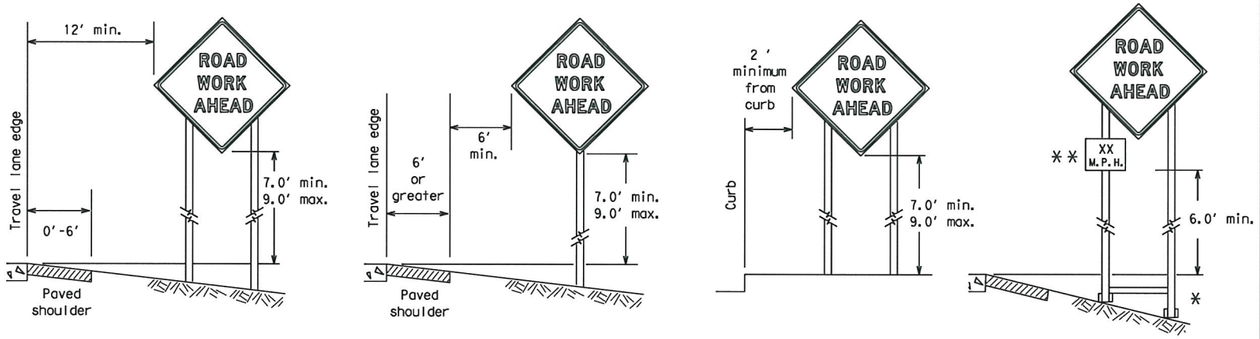

⁎ When placing skid supports on unlevel ground, the leg post lengths must be adjusted so the sign appears straight and plumb. Objects shall NOT be placed under skids as a means of leveling.

⁎⁎ When plaques are placed on dual-leg supports, they should be attached to the upright nearest the travel lane. Supplemental plaques (advisory or distance) should not cover the surface of the parent sign.

ATTACHMENT FOR SIGN SUPPORTS

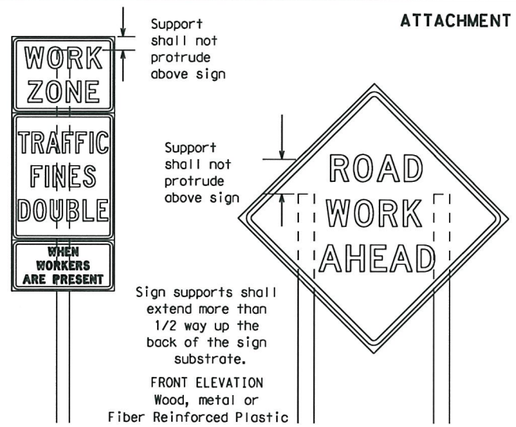

Splicing embedded perforated square metal tubing in order to extend post height will only be allowed when the splice is made using four bolts, two above and two below the spice point. Splice must be located entirely behind the sign substrate, not near the base of the support. Splice insert lengths should be at least 5 times nominal post size, centered on the splice and of at least the same guage material.

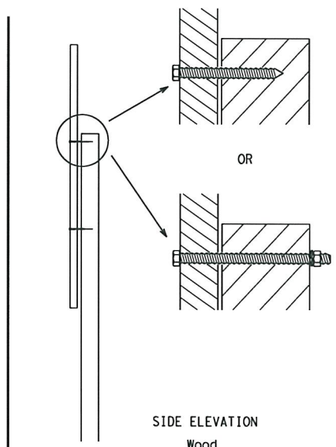

Attachment to wooden supports will be by bolts and nuts or screws. Use TxDOT's or manufacturer's recommended procedures for attaching sign substrates to other types of sign supports

Nails will NOT be allowed.

Each sign shall be attached directly to the sign support. Multiple signs shall not be joined or spliced by any means. Wood supports shall not be extended or repaired by splicing or other means.

STOP/SLOW PADDLES

1. STOP/SLOW paddles are the primary method to control traffic by flaggers. The STOP/SLOW paddle size should be 24" x 24" as detailed below.
2. When used at night, the STOP/SLOW paddle shall be retroreflectorized.
3. STOP/SLOW paddles may be attached to a staff with a minimum length of 6' to the bottom of the sign.
4. Any lights incorporated into the STOP or SLOW paddle faces shall only be as specifically described in Section 6E.03 Hand Signaling Devices in the TMUTCD.

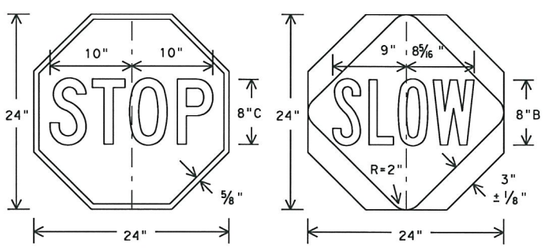

CONTRACTOR REQUIREMENTS FOR MAINTAINING PERMANENT SIGNS WITHIN THE PROJECT LIMITS

1. Permanent signs are used to give notice of traffic laws or regulations, call attention to conditions that are potentially hazardous to traffic operations, show route designations, destinations, directions, distances, services, points of interest, and other geographical, recreational, or cultural information. Drivers proceeding through a work zone need the same, if not better route guidance as normally installed on a roadway without construction.
2. When permanent regulatory or warning signs conflict with work zone conditions, remove or cover the permanent signs until the permanent sign message matches the roadway condition.
3. When existing permanent signs are moved and relocated due to construction purposes, they shall be visible to motorists at all times.
4. If existing signs are to be relocated on their original supports, they shall be installed on crashworthy bases as shown on the SMD Standard sheets. The signs shall meet the required mounting heights shown on the BC Sheets or the SMD Standards. This work should be paid for under the appropriate pay item for relocating existing signs.
5. If permanent signs are to be removed and relocated using temporary supports, the Contractor shall use crashworthy supports as shown on the BC sheets or the CWZTCD. The signs shall meet the required mounting heights shown on the BC Sheets or the SMD Standards during construction. This work should be paid for under the appropriate pay item for relocating existing signs.
6. Any sign or traffic control device that is struck or damaged by the Contractor or his/her construction equipment shall be replaced as soon as possible by the Contractor to ensure proper guidance for the motorists. This will be subsidiary to Item 502.

GENERAL NOTES FOR WORK ZONE SIGNS

1. Contractor shall install and maintain signs in a straight and plumb condition and/or as directed by the Engineer.
2. Wooden sign posts shall be painted white.
3. Barricades shall NOT be used as sign supports.
4. Nails shall NOT be used to attach signs to any support.
5. All signs shall be installed in accordance with the plans or as directed by the Engineer. Signs shall be used to regulate, warn, and guide the traveling public safely through the work zone.
6. The Contractor may furnish either the sign design shown in the plans or in the "Standard Highway Sign Designs for Texas" (SHSD). The Engineer/Inspector may require the Contractor to furnish other work zone signs that are shown in the TMUTCD but may have been omitted from the plans. Any variation in the plans shall be documented by written agreement between the Engineer and the Contractor's Responsible Person. All changes must be documented in writing before being implemented. This can include documenting the changes in the Inspector's TxDOT diary and having both the Inspector and Contractor initial and date the agreed upon changes.
7. The Contractor shall furnish sign supports listed in the "Compliant Work Zone Traffic Control Device List" (CWZTCD). The Contractor shall install the sign support in accordance with the manufacturer's recommendations. If there is a question regarding installation procedures, the Contractor shall furnish the Engineer a copy of the manufacturer's installation recommendations so the Engineer can verify the correct procedures are being followed.
8. The Contractor is responsible for installing signs on approved supports and replacing signs with damaged or cracked substrates and/or damaged or marred reflective sheeting as directed by the Engineer/Inspector.
9. Identification markings may be shown only on the back of the sign substrate. The maximum height of letters and/or company logos used for identification shall be 1 inch.
10. The Contractor shall replace damaged wood posts. New or damaged wood sign posts shall not be spliced.

DURATION OF WORK (as defined by the "Texas Manual on Uniform Traffic Control Devices" Part 6)

1. The types of sign supports, sign mounting height, the size of signs, and the type of sign substrates can vary based on the type of work being performed. The Engineer is responsible for selecting the appropriate size sign for the type of work being performed. The Contractor is responsible for ensuring the sign support, sign mounting height and substrate meets manufacturer's recommendations in regard to crashworthiness and duration of work requirements.
   a. Long-term stationary - work that occupies a location more than 3 days.
   b. Intermediate-term stationary - work that occupies a location more than one daylight period up to 3 days, or nighttime work lasting more than one hour.
   c. Short-term stationary - daytime work that occupies a location for more than 1 hour in a single daylight period.
   d. Short, duration - work that occupies a location up to 1 hour.
   e. Mobile - work that moves continuously or intermittently (stopping for up to approximately 15 minutes.)

SIGN MOUNTING HEIGHT

1. The bottom of Long-term/Intermediate-term signs shall be at least 7 feet, but not more than 9 feet, above the paved surface, except as shown for supplemental plaques mounted below other signs.
2. The bottom of Short-term/Short Duration signs shall be a minimum of 1 foot above the pavement surface but no more than 2 feet above the ground.
3. Long-term/Intermediate-term Signs may be used in lieu of Short-term/Short Duration signing.
4. Short-term/Short Duration signs shall be used only during daylight and shall be removed at the end of the workday. or raised to appropriate Long-term/Intermediate sign height.
5. Regulatory signs shall be mounted at least 7 feet, but not more than 9 feet, above the paved surface regardless of work duration.

SIZE OF SIGNS

1. The Engineer may allow the use of smaller size construction warning signs on secondary roads or city streets where speeds are low if the sign size is listed as an option on the "Typical Construction Warning Sign Size and Spacing" chart shown on BC(2).
2. The Contractor shall furnish the sign sizes shown in plans, the BC Sheets, the TCP sheets or as directed by the Engineer.

SIGN SUBSTRATES

1. The Contractor shall ensure the sign substrate is installed in accordance with the manufacturer's recommendations for the type of sign support that is being used. The CWZTCD lists each substrate that can be used on the different types and models of sign supports.
2. "Mesh" type materials are NOT an approved sign substrate, regardless of the tightness of the weave.
3. All wooden individual sign panels fabricated from 2 or more pieces shall have one or more plywood cleat, 1/2" thick by 6" wide, fastened to the back of the sign and extending fully across the sign. The cleat shall be attached to the back of the sign using wood screws that do not penetrate the face of the sign panel. The screws shall be placed on both sides of the splice and spaced at 6" centers. The Engineer may approve other methods of splicing the sign face.

REFLECTIVE SHEETING

1. All signs shall be retroreflective and constructed of sheeting meeting the color and retro-reflectivity requirements of DMS-8300 for rigid signs or DMS-8310 for roll-up signs. The web address for DMS specifications is shown on BC(1).
2. White sheeting, meeting the requirements of DMS-8300 Type C (High Specific Intensity), shall be used for signs with a white background.
3. Orange sheeting, meeting the requirements of DMS-8300 Type E (Fluorescent Prismatic), shall be used for rigid signs with orange backgrounds.

SIGN LETTERS

1. All sign letters and numbers shall be clear, and open rounded type uppercase alphabet letters as approved by the Federal Highway Administration (FHWA) and as published in the "Standard Highway Sign Design for Texas" manual. Signs, letters and numbers shall be of first class workmanship in accordance with Department Standards and Specifications.

REMOVING OR COVERING

1. When sign messages may be confusing or do not apply, the signs shall be removed or completely covered.
2. Long-term stationary or intermediate stationary signs installed on square metal tubing may be turned away from traffic 90 degrees when the sign message is not applicable. This type of sign support meets the crashworthiness standards regardless of the direction of impact. This technique may not be used for signs installed in the median of divided highways or near any intersections where the sign may be seen from approaching traffic.
3. Signs installed on wooden skids shall not be turned at 90 degree angles to the roadway. These signs should be removed or completely covered when not required.
4. When signs are covered, the material used shall be opaque, such as heavy mil black plastic, or other materials which will cover the entire sign face and maintain their opaque properties under automobile headlights at night, without damaging the sign sheeting.
5. Burlap shall NOT be used to cover signs.
6. Duct tape or other adhesive material shall NOT be affixed to a sign face. These materials can damage the retroreflectivity of sheeting.
7. Signs and anchor stubs shall be removed and holes backfilled upon completion of work.

SIGN SUPPORT WEIGHTS

1. Where sign supports require the use of weights to keep from turning over, the use of sandbags with dry, cohesionless sand is recommended.
2. The sandbags will be tied shut to keep the sand from spilling and to maintain a constant weight.
3. Rock, concrete, iron, steel or other solid objects shall not be permitted for use as sign support weights.
4. Sandbags should weigh a minimum of 35 lbs and a maximum of 50 lbs.
5. Sandbags shall be made of a durable material that tears upon vehicular impact.
6. Rubber (such as tire inner tubes) shall NOT be used for sandbags.
7. Rubber ballasts designed for channelizing devices should not be used for ballast on portable sign supports. Sign supports designed and manufactured with rubber bases may be used when shown on the CWZTCD list.
8. Sandbags shall only be placed along or laid over the base supports of the traffic control device and shall not be suspended above ground level or hung with rope, wire, chains or other fasteners. Sandbags shall be placed along the length of the skids to weigh down the sign support.
9. Sandbags shall NOT be placed under the skid and shall not be used to level sign supports placed on slopes.

Texas Department of Transportation
Traffic Operations Division

BARRICADE AND CONSTRUCTION TEMPORARY SIGN NOTES STANDARD

4 of 12 BC(4)-07

©TxDOT 11-4-02

DN: TXDOT	CK: TXDOT	DW: TXDOT	CK: TXDOT
9-07 REVISIONS	CONT	SECT	JOB	HIGHWAY
	0091	03	021	SH289
	DIST	COUNTY		SHEET NO.
	18	ELLIS		77

DATE:
FILE:

P-201107-01

DISCLAIMER: The use of this standard is governed by the "Texas Engineering Practice Act". No warranty of any kind is made by TxDOT for any purpose whatsoever. TxDOT assumes no responsibility for the conversion of this standard to other formats or for incorrect results or damages resulting from its use.

DATE:
FILE:

SKID MOUNTED WOOD SIGN SUPPORTS

LONG/INTERMEDIATE TERM STATIONARY - PORTABLE SKID MOUNTED SIGN SUPPORTS □

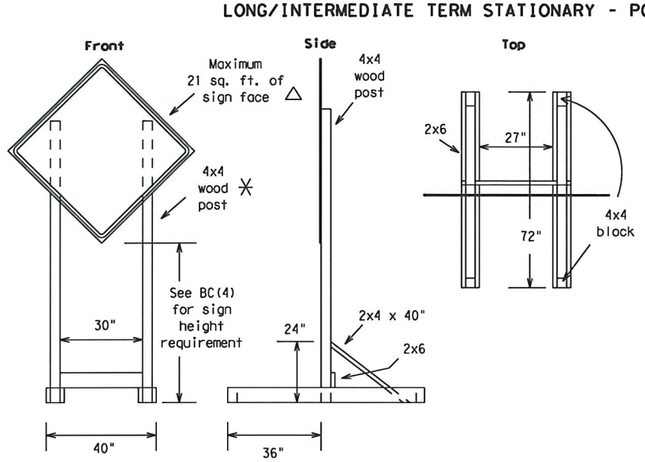

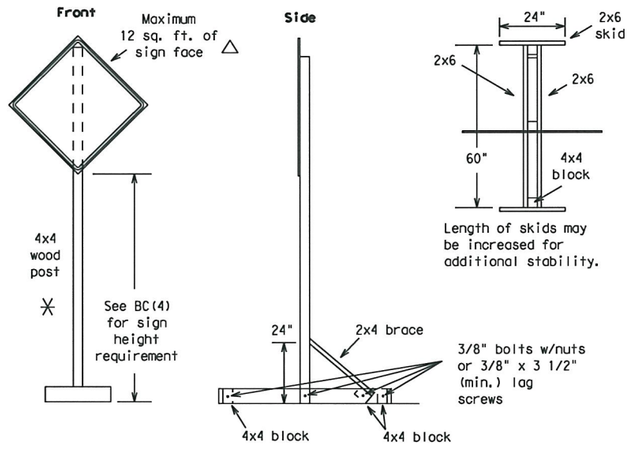

SKID MOUNTED PERFORATED SQUARE STEEL TUBING SIGN SUPPORTS

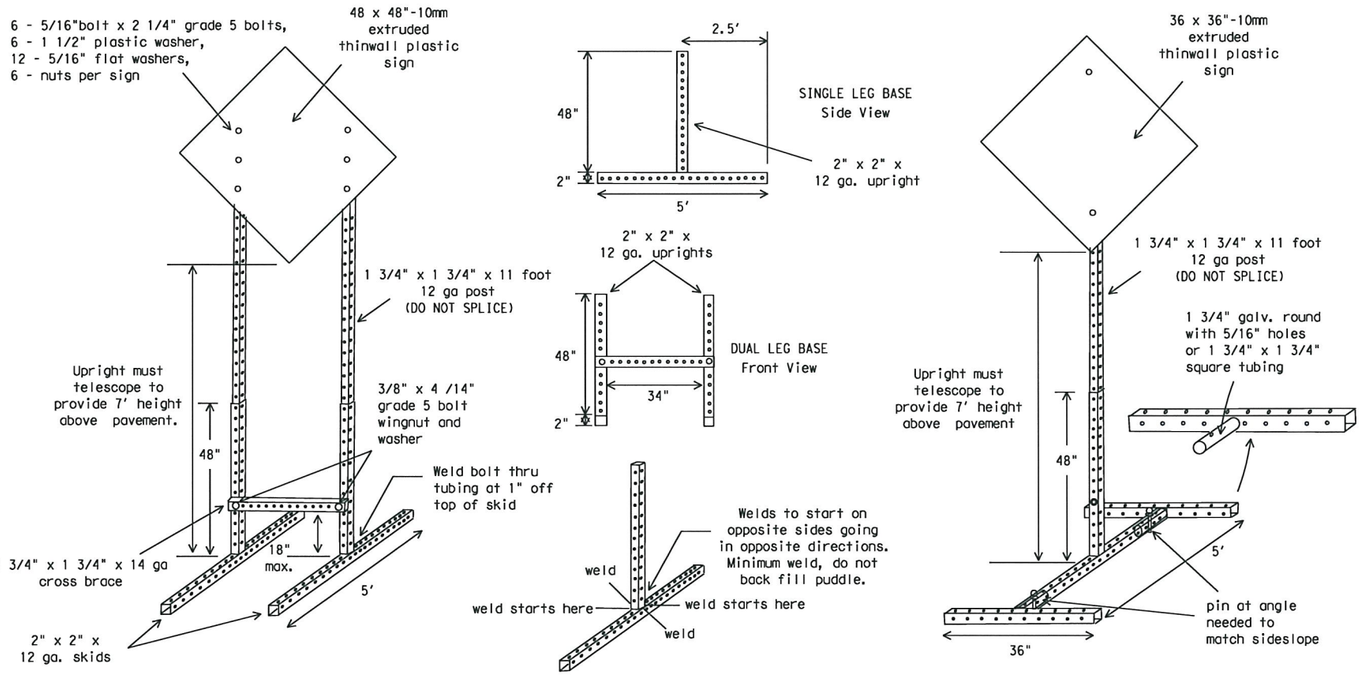

WEDGE ANCHORS

Both steel and plastic Wedge Anchor Systems as shown on the SMD Standard Sheets may be used as temporary sign supports for signs up to 10 square feet of sign face. They may be set in concrete or in sturdy soils if approved by the Engineer. (See web address for "Traffic Engineering Standard Sheets" on BC(1)).

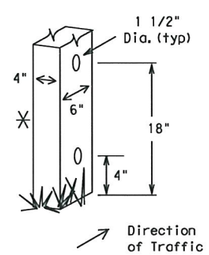

WOOD POST SYSTEM FOR GROUND MOUNTED SIGN SUPPORTS

Nominal Post Size	No. of Posts	Maximum Sq. feet of Sign Face	Minimum Soil Embedment	Drilled Hole(s) Required
4 x 4	1	12	36"	NO
4 x 4	2	21	36"	NO
4 x 6	1	21	36"	YES
4 x 6	2	36	36"	YES

GROUND MOUNTED SIGN SUPPORTS

Refer to the CWZTCD and the manufacturer's installation procedure for each type sign support.
The maximum sign square footage shall adhere to the manufacturer's recommendation.
Two post installations can be used for larger signs.

PERFORATED SQUARE METAL TUBING

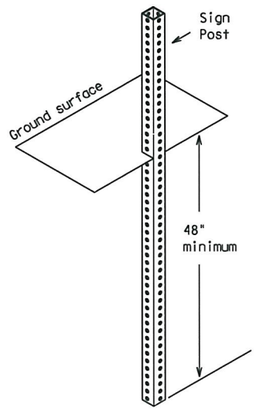

OPTION 1
(Direct Embedment)

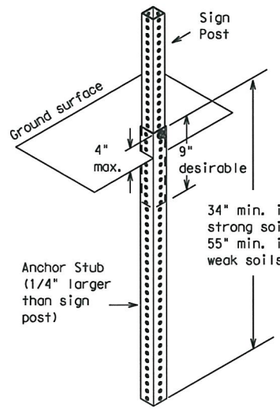

OPTION 2
(Anchor Stub)

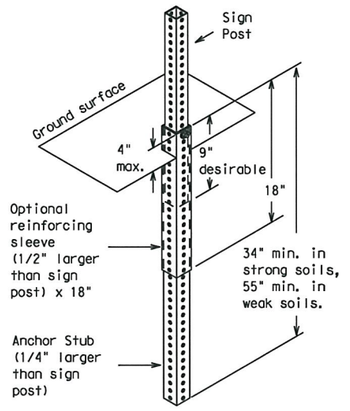

OPTION 3
(Anchor Stub and Reinforcing Sleeve))

WING CHANNEL

Lap-splice/base bolted anchor

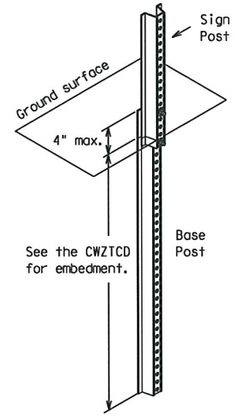

GENERAL NOTES

1. Nails may be used in the assembly of wooden sign supports, but 3/8" bolts with nuts or 3/8" x 3 1/2" lag screws must be used on every joint for final connection.
2. More details of approved Long/Intermediate and Short Term supports can be found on the CWZTCD list. See BC(1) for website location.
3. No more than 2 sign posts shall be placed within a 7 ft. circle, except for specific materials noted on the CWZTCD List.
4. When project is completed, all sign supports and foundations shall be removed from the project site. This will be considered subsidiary to Item 502.

□ See BC(4) for definition of "Work Duration."

✳ Wood sign posts MUST be one piece. Splicing will NOT be allowed. Posts shall be painted white.

△ See the CWZTCD for the type of sign substrate that can be used for each approved sign support.

Texas Department of Transportation
Traffic Operations Division

BARRICADE AND CONSTRUCTION TYPICAL SIGN SUPPORT STANDARD

5 of 12 BC(5)-07

©TxDOT 11-4-02

DN: TXDOT	CK: TXDOT	DW: TXDOT	CK: TXDOT
CONT	SECT	JOB	HIGHWAY
0091	03	021	SH289
DIST	COUNTY		SHEET NO.
18			78

9-07 REVISIONS

P-201107-01

DISCLAIMER:
The use of this standard is governed by the "Texas Engineering Practice Act". No warranty of any kind is made by TxDOT for any purpose whatsoever. TxDOT assumes no responsibility for the conversion of this standard to other formats or for incorrect results or damages resulting from its use.

DATE:
FILE:

PORTABLE CHANGEABLE MESSAGE SIGNS

1. The Engineer/Inspector shall approve all messages used on portable changeable message signs (PCMS).
2. Messages on PCMS should contain no more than 8 words (about four to eight characters per word), not including simple words such as "TO," "FOR," "AT," etc.
3. Messages should consist of a single phase, or two phases that alternate. Three-phase messages are not allowed. Each phase of the message should convey a single thought, and must be understood by itself.
4. Use the word "EXIT" to refer to an exit ramp on a freeway; i.e., "EXIT CLOSED." Do not use the term "RAMP."
5. Always use the route or interstate designation (IH, US, SH, FM) along with the number when referring to a roadway.
6. When in use the bottom of a stationary PCMS message panel should be a minimum 7 feet above the roadway, where possible.
7. The message term "WEEKEND" should be used only if the work is to start on Saturday morning and end by Sunday evening at midnight. Actual days and hours of work should be displayed on the PCMS if work is to begin on Friday evening and/or continue into Monday morning.
8. The Engineer/Inspector may select one of two options which are available for displaying a two-phase message on a PCMS. Each phase may be displayed for either four seconds each or for three seconds each.
9. Do not "flash" messages or words included in a message. The message should be steady burn or continuous while displayed.
10. Do not present redundant information on a two-phase message; i.e., keeping two lines of the message the same and changing the third line.
11. Do not use the word "Danger" in message.
12. Do not display the message "LANES SHIFT LEFT" or "LANES SHIFT RIGHT" on a PCMS. Drivers do not understand the message.
13. Do not display messages that scroll horizontally or vertically across the face of the sign.
14. The following table lists abbreviated words and two-word phrases that are acceptable for use on a PCMS. Both words in a phrase must be displayed together. Words or phrases not on this list should not be abbreviated.
15. PCMS character height should be at least 18 inches for trailer mounted units. They should be visible from at least 1/2 (.5) mile and the text should be legible from at least 720 feet. Truck mounted units must have a character height of 10 inches and must be legible from at least 400 feet.
16. Each line of text should be centered on the message board rather than left or right justified.
17. If disabled, the PCMS should default to an illegible display that will not alarm motorists and will only be used to alert workers that the PCMS has malfunctioned. A pattern such as a series of horizontal solid bars is appropriate.

Word or Phrase	Abb.	Word or Phrase	Abb.
Access Road	ACCS RD	Major	MAJ
Air Quality	AIR QLTY	Miles	MI
Alternate	ALT	Miles Per Hour	MPH
Avenue	AVE	Minor	MNR
Best Route	BEST RTE	Monday	MON
Boulevard	BLVD	Normal	NORM
Bridge	BRDG	North	N
Cannot	CANT	Northbound	(route) N
Center	CNTR	Parking	PKING
Construction Ahead	CONST AHEAD	Parking Lot	PRK LOT
Detour Route	DETOUR RTE	Road	RD
Do Not	DONT	Right Lane	RGT LN
East	E	Saturday	SAT
Eastbound	(route) E	Service Road	SERV RD
Emergency	EMER	Shoulder	SHLDR
Emergency Vehicle	EMER VEH	Slippery	SLIP
Entrance, Enter	ENT	South	S
Express Lanes	EXP LANE	Southbound	(route) S
Expressway	EXPWY	Speed	SPD
XXXX Feet	XXXX FT	Street	ST
Fog Ahead	FOG AHD	Sunday	SUN
Freeway	FRWY, FWY	Telephone	PHONE
Freeway Blocked	FWY BLKD	Temporary	TEMP
Friday	FRI	Thursday	THURS
Hazardous Driving	HAZ DRIVING	To Downtown	TO DWNTN
Hazardous Material	HAZMAT	Traffic	TRAF
High-Occupancy Vehicle	HOV	Travelers	TRVLRS
Highway	HWY	Tuesday	TUES
Hours	HR	Time Minutes	TIME MIN
Information	INFO	Upper Level	UPPR LVL
It Is	ITS	Vehicle	VEH
Junction	JCT	Warning	WARN
Left	LFT	Wednesday	WED
Left Lane	LFT LN	Weight Limit	WT LIMIT
Lane Closed	LN CLSD	West	W
Lower Level	LOWR LVL	Westbound	(route) W
Maintenance	MAINT	Wet Pavement	WET PVMT
		Will Not	WONT

Roadway designation # IH-number, US-number, SH-number, FM-number

WHEN NOT IN USE, REMOVE THE PCMS FROM THE RIGHT-OF-WAY OR PLACE THE PCMS BEHIND BARRIER OR GUARDRAIL WITH SIGN PANEL TURNED PARALLEL TO TRAFFIC

RECOMMENDED PHASES AND FORMATS FOR PCMS MESSAGES DURING ROADWORK ACTIVITIES

(The Engineer may approve other messages not specifically covered here.)

Phase 1: Condition Lists

Road/Lane/Ramp Closure List

- FREEWAY CLOSED X MILE
- FRONTAGE ROAD CLOSED
- ROAD CLOSED AT SH XXX
- SHOULDER CLOSED XXX FT
- ROAD CLSD AT FM XXXX
- RIGHT LN CLOSED XXX FT
- RIGHT X LANES CLOSED
- RIGHT X LANES OPEN
- CENTER LANE CLOSED
- DAYTIME LANE CLOSURES
- NIGHT LANE CLOSURES
- I-XX SOUTH EXIT CLOSED
- VARIOUS LANES CLOSED
- EXIT XXX CLOSED X MILE
- EXIT CLOSED
- RIGHT LN TO BE CLOSED
- MALL DRIVEWAY CLOSED
- X LANES CLOSED TUE - FRI
- XXXXXXXX BLVD CLOSED

Other Condition List

- ROADWORK XXX FT
- ROAD REPAIRS XXXX FT
- FLAGGER XXXX FT
- LANE NARROWS XXXX FT
- RIGHT LN NARROWS XXXX FT
- TWO-WAY TRAFFIC XX MILE
- MERGING TRAFFIC XXXX FT
- CONST TRAFFIC XXX FT
- LOOSE GRAVEL XXXX FT
- UNEVEN LANES XXXX FT
- DETOUR X MILE
- ROUGH ROAD XXXX FT
- ROADWORK PAST SH XXXX
- ROADWORK NEXT FRI-SUN
- BUMP XXXX FT
- US XXX EXIT X MILES
- TRAFFIC SIGNAL XXXX FT
- LANES SHIFT *

* LANES SHIFT in Phase 1 must be used with STAY IN LANE in Phase 2.

Phase 2: Possible Component Lists

Action to Take/Effect on Travel List

- MERGE RIGHT
- FORM X LINES RIGHT
- DETOUR NEXT X EXITS
- USE XXXXX RD EXIT
- USE EXIT XXX
- USE EXIT I-XX NORTH
- STAY ON US XXX SOUTH
- USE I-XX E TO I-XX N
- TRUCKS USE US XXX N
- WATCH FOR TRUCKS
- WATCH FOR TRUCKS
- EXPECT DELAYS
- EXPECT DELAYS
- PREPARE TO STOP
- REDUCE SPEED XXX FT
- END SHOULDER USE
- USE OTHER ROUTES
- WATCH FOR WORKERS
- STAY IN LANE *

Location List

- AT FM XXXX
- BEFORE RAILROAD CROSSING
- NEXT X MILES
- PAST US XXX EXIT
- XXXXXXX TO XXXXXXX
- US XXX TO FM XXXX

Warning List

- SPEED LIMIT XX MPH
- MAXIMUM SPEED XX MPH
- MINIMUM SPEED XX MPH
- ADVISORY SPEED XX MPH
- RIGHT LANE EXIT
- USE CAUTION
- DRIVE SAFELY
- DRIVE WITH CARE

** Advance Notice List

- TUE-FRI XX AM- X PM
- APR XX-XX X PM-X AM
- BEGINS MONDAY
- BEGINS MAY XX
- MAY X-X XX PM - XX AM
- NEXT FRI-SUN
- XX AM TO XX PM
- NEXT TUE AUG XX
- TONIGHT XX PM- XX AM

* LANES SHIFT in Phase 1 must be used with STAY IN LANE in Phase 2.

** See Application Guidelines Note 6.

Application Guidelines

1. Only 1 or 2 phases are to be used on a PCMS.
2. The 1st phase (or both) should be selected from the "Road/Lane/Ramp Closure List" and the "Other Condition List".
3. A 2nd phase can be selected from the "Action to Take/Effect on Travel, Location, General Warning, or Advance Notice Phase Lists".
4. A Location Phase is necessary only if a distance or location is not included in the first phase selected.
5. If two PCMS are used in sequence, they must be separated by a minimum of 1000 ft. Each PCMS shall be limited to two phases, and should be understandable by themselves.
6. For advance notice, when the current date is within seven days of the actual work date, calendar days should be replaced with days of the week. Advance notification should typically be for no more than one week prior to the work

Wording Alternatives

1. The words RIGHT, LEFT and ALL can be interchanged as appropriate.
2. Roadway designations IH, US, SH, FM and LP can be interchanged as appropriate.
3. EAST, WEST, NORTH and SOUTH (or abbreviations E, W, N and S) can be interchanged as appropriate.
4. Highway names and numbers replaced as appropriate.
5. ROAD, HIGHWAY and FREEWAY can be interchanged as needed.
6. AHEAD may be used instead of distances if necessary.
7. FT and MI, MILE and MILES interchanged as appropriate.
8. AT, BEFORE and PAST interchanged as needed.
9. Distances or AHEAD can be eliminated from the message if a location phase is used.

PCMS SIGNS WITHIN THE R.O.W. SHALL BE BEHIND GUARDRAIL OR CONCRETE BARRIER OR SHALL HAVE A MINIMUM OF FOUR (4) PLASTIC DRUMS PLACED PERPENDICULAR TO TRAFFIC ON THE UPSTREAM SIDE OF THE PCMS.

FULL MATRIX PCMS SIGNS

1. When Full Matrix PCMS signs are used, the character height and legibility/visibility requirements shall be maintained as listed in Note 15 under "PORTABLE CHANGEABLE MESSAGE SIGNS" above.
2. When symbol signs, such as the CW20-7a Flagger Symbol, are represented graphically on the Full Matrix PCMS sign and, with the approval of the Engineer, it shall maintain the legibility/visibility requirement listed above.
3. When symbol signs are represented graphically on the Full Matrix PCMS, they shall only supplement the use of the static sign represented, and shall not substitute for, or replace that sign.
4. A full matrix PCMS may be used to simulate a flashing arrow panel provided it meets the visibility, flash rate and dimming requirements on BC(7), for the same size arrow.

Texas Department of Transportation
Traffic Operations Division

BARRICADE AND CONSTRUCTION PORTABLE CHANGEABLE MESSAGE SIGN (PCMS) STANDARD

6 of 12

BC(6)-07

©TxDOT 11-4-02

DN: TXDOT	CK: TXDOT	DW: TXDOT	CK: TXDOT
REVISIONS	CONT	SECT	JOB	HIGHWAY
9-07	0091	03	021	SH289
	DIST	COUNTY		SHEET NO.
	18			79

P-201107-01

DISCLAIMER:
The use of this standard is governed by the "Texas Engineering Practice Act". No warranty of any kind is made by TxDOT for any purpose whatsoever. TxDOT assumes no responsibility for the conversion of this standard to other formats or for incorrect results or damages resulting from its use.

BARRIER REFLECTORS FOR CONCRETE TRAFFIC BARRIER AND ATTENUATORS

1. Barrier Reflectors shall be prequalified, and conform to the color and reflectivity requirements of DMS-8600. A list of prequalified Barrier Reflectors (Type C Delineators) can be found at the Material Producer List web address shown on BC(1).
2. Color of Barrier Reflectors shall be as specified in the TMUTCD. The cost of the reflectors shall be considered subsidiary to Item 502.

CONCRETE TRAFFIC BARRIER (CTB)

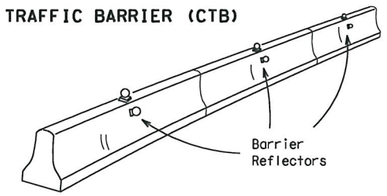

3. Where traffic is on one side of the CTB, two (2) Barrier Reflectors shall be mounted in approximately the midsection of each section of CTB. An alternate mounting location is uniformly spaced at one end of each CTB. This will allow for attachment of a barrier grapple without damaging the reflector. The Barrier Reflector mounted on the side of the CTB shall be located directly below the reflector mounted on top of the barrier, as shown in the detail above.
4. Where CTB separates two-way traffic, three barrier reflectors shall be mounted on each section of CTB. The reflector unit on top shall have two yellow reflective faces (Bi-Directional)while the reflectors on each side of the barrier shall have one yellow reflective face, as shown in the detail above.
5. When CTB separates traffic traveling in the same direction, no barrier reflectors will be required on top of the CTB.
6. Barrier Reflector units shall be yellow or white in color to match the edgeline being supplemented. Yellow Barrier Reflectors shall be made with Type E Fluorescent Prismatic Yellow Retroreflective Sheeting. White reflectors shall be made with Type D White Prismatic sheeting.
7. Maximum spacing of Barrier Reflectors is forty (40) feet.
8. Pavement markers or temporary flexible-reflective roadway marker tabs shall NOT be used as CTB delineation.
9. Attachment of Barrier Reflectors to CTB shall be per manufacturer's recommendations.
10. Missing or damaged Barrier Reflectors shall be replaced as directed by the Engineer.
11. Single slope barriers shall be delineated as shown on the above detail.

LOW PROFILE CONCRETE BARRIER (LPCB)

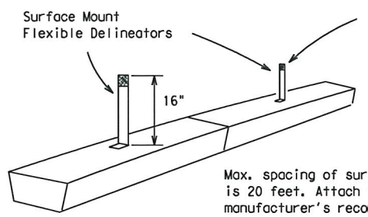

Max. spacing of surface mount flexible delineators is 20 feet. Attach the delineators as per manufacturer's recommendations.

DELINEATION OF END TREATMENTS

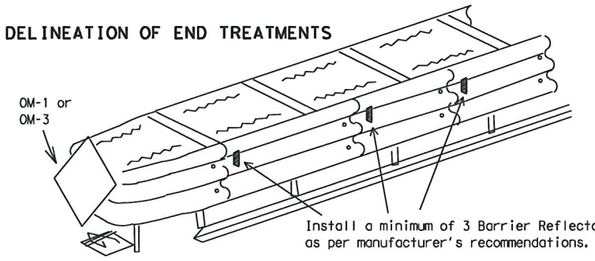

	APPROACHING TRAFFIC	
	BOTH SIDES	ONE SIDE
DELINEATION	OM-1	OM-3 or Vertical Panel

END TREATMENTS FOR CTB'S USED IN WORK ZONES

End treatments used on CTB's in work zones shall meet crashworthy standards as defined in the National Cooperative Highway Research Report 350. Refer to the CWZTCD List for approved end treatments and manufacturers.

TYPICAL FLASHING ARROW PANEL

Arrow Panels may be located behind channelizing devices in place for a shoulder taper or merging taper, otherwise they shall be delineated with four (4) channelizing devices placed perpendicular to traffic on the upstream side of traffic.

1. The Flashing Arrow Panel should be used for all lane closures on multi-lane roadways, or slow moving maintenance or construction activities on the travel lanes.
2. Flashing Arrow Panels should not be used on two-lane, two-way roadways, detours, diversions or work on shoulders unless the "CAUTION" display (see detail below) is used.
3. The Engineer/Inspector shall choose all appropriate signs, barricades and/or other traffic control devices that should be used in conjunction with the Flashing Arrow Panel.
4. The Flashing Arrow Panel should be able to display the following symbols:

Flashing RIGHT (LEFT) ARROW

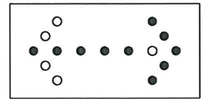

Flashing DOUBLE ARROW

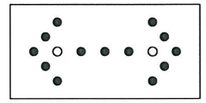

Flashing CAUTION

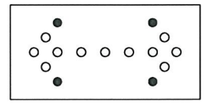

5. The "CAUTION" display consists of four corner lamps flashing simultaneously.
6. The straight line caution display is NOT ALLOWED.
7. The Flashing Arrow Panel shall be capable of minimum 50 percent dimming from rated lamp voltage. The flashing rate of the lamps shall not be less than 25 nor more than 40 flashes per minute.
8. Minimum lamp "on time" shall be approximately 50 percent for the flashing arrow and equal intervals of 25 percent for each sequential phase of the flashing chevron.
9. The sequential arrow display is NOT ALLOWED.
10. The flashing arrow display is the TxDOT standard; however, the sequential Chevron display may be used during daylight operations.

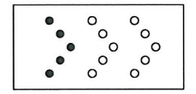

Sequential Chevron

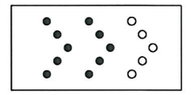

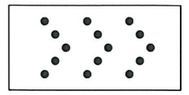

REQUIREMENTS

TYPE	MINIMUM SIZE	MINIMUM NUMBER OF PANEL LAMPS	MINIMUM VISIBILITY DISTANCE
B	30 x 60	13	3/4 mile
C	48 x 96	15	1 mile

ATTENTION: Flashing Arrow Panels shall be equipped with automatic dimming devices.

WHEN NOT IN USE, REMOVE THE ARROW PANEL FROM THE RIGHT-OF-WAY OR PLACE THE ARROW PANEL BEHIND CONCRETE TRAFFIC BARRIER OR GUARDRAIL.

11. The Flashing Arrow Panel shall be mounted on a vehicle, trailer or other suitable support.
12. A Flashing Arrow Panel SHALL NOT BE USED to laterally shift traffic.
13. A full matrix PCMS may be used to simulate a Flashing Arrow Panel provided it meets visibility, flash rate and dimming requirements on this sheet for the same size arrow.
14. Minimum mounting height of trailer mounted arrow panels should be 7 feet from roadway to bottom of panel.

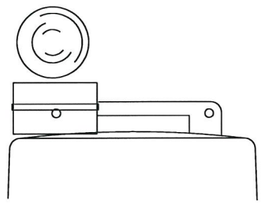

Type C Warning Light or approved substitute mounted adjacent to the travel way.

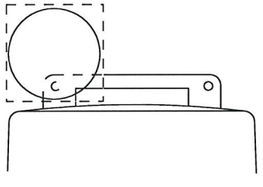

Warning reflector may be round or square. Must have a reflective surface area of at least 30 square inches

WARNING LIGHTS

1. Warning lights shall meet the requirements of the TMUTCD.
2. Warning lights shall NOT be installed on barricades.
3. Type A-Low Intensity Flashing Warning Lights are commonly used with drums. They are intended to warn of or mark a potentially hazardous area. Their use shall be as indicated on this sheet and/or other sheets of the plans by the designation "FL". The Type A Warning Lights shall not be used with signs manufactured with Type E Sheeting (Fluorescent Prismatic) meeting the requirements of Departmental Material Specification DMS-8300.
4. Type-C and Type D 360 degree Steady Burn Lights are intended to be used in a series for delineation to supplement other traffic control devices. Their use shall be as indicated on this sheet and/or other sheets of the plans by the designation "SB".
5. The Engineer/Inspector or the plans shall specify the location and type of warning lights to be installed on the traffic control devices.
6. When required by the Engineer, the Contractor shall furnish a copy of the warning lights certification. The warning light manufacturer will certify the warning lights meet the requirements of the latest ITE Purchase Specifications for Flashing and Steady-Burn Warning Lights.
7. When used to delineate curves, Type-C and Type D Steady Burn Lights should only be placed on the outside of the curve, not the inside.

WARNING LIGHTS MOUNTED ON PLASTIC DRUMS

1. Type A flashing warning lights are intended to warn drivers that they are approaching or are in a potentially hazardous area.
2. Type A random flashing warning lights are not intended for delineation and shall not be used in a series.
3. A series of sequential flashing warning lights placed on channelizing devices to form a merging taper may be used for delineation. If used, the successive flashing of the sequential warning lights should occur from the beginning of the taper to the end of the merging taper in order to identify the desired vehicle path. The rate of flashing for each light shall be 65 flashes per minute, plus or minus 10 flashes.
4. Type C and D steady-burn warning lights are intended to be used in a series to delineate the edge of the travel lane on detours, on lane changes, on lane closures, and on other similar conditions.
5. Type A, Type C and Type D warning lights shall be installed at locations as detailed on other sheets in the plans.
6. Warning lights shall not be installed on a drum that has a sign, chevron or vertical panel.
7. The maximum spacing for warning lights on drums should be identical to the channelizing device spacing.

WARNING REFLECTORS MOUNTED ON PLASTIC DRUMS AS A SUBSTITUTE FOR TYPE C (STEADY BURN) WARNING LIGHTS

1. A warning reflector or approved substitute may be mounted on a plastic drum as a substitute for a Type C, steady burn warning light at the discretion of the Contractor unless otherwise noted in the plans.
2. The warning reflector shall be yellow in color and shall be manufactured using a sign substrate approved for use with plastic drums listed on the CWZTCD.
3. The warning reflector shall have a minimum retroreflective surface area (one-side) of 30 square inches.
4. Round reflectors shall be fully reflectorized, including the area where attached to the drum.
5. Square substrates must have a minimum of 30 square inches of reflectorized sheeting. They do not have to be reflectorized where it attaches to the drum.
6. The side of the warning reflector facing approaching traffic shall have sheeting meeting the color and retroreflectivity requirements for DMS 8300-Type D (Non-fluorescent Prismatic).
7. When used near two-way traffic, both sides of the warning reflector shall be reflectorized.
8. The warning reflector should be mounted on the side of the handle nearest approaching traffic.
9. The maximum spacing for warning reflectors should be identical to the channelizing device spacing requirements.

TRUCK-MOUNTED ATTENUATORS

1. Truck-mounted attenuators (TMA) used on TxDOT facilities must meet the requirements outlined in the National Cooperative Highway Research Report No. 350 (NCHRP 350).
2. Refer to the CWZTCD for the requirements of Level 2 or Level 3 TMAs.
3. Refer to the dates shown in the CWZTCD to ensure that the TMA meets the age requirements and the crashworthiness criteria established by the Federal Highway Administration (FHWA) for TMAs.
4. Refer to the CWZTCD for a list of approved TMAs.
5. TMAs are required on freeways unless otherwise noted in the plans.
6. A TMA should be used anytime that it can be positioned approximately 30 to 100 feet in advance of the area of crew exposure without adversely affecting the work performance.
7. The only reason a TMA should not be required is when a work area is spread down the roadway and the work crew is an extended distance from the TMA.

Texas Department of Transportation
Traffic Operations Division

BARRICADE AND CONSTRUCTION ARROW PANEL, REFLECTORS, WARNING LIGHTS & ATTENUATOR STANDARD

7 of 12 BC(7)-07

© TxDOT 11-4-02

DN: TXDOT	CK: TXDOT	DW: TXDOT	CK: TXDOT
CONT	SECT	JOB	HIGHWAY
0091	03	021	SH289
DIST	COUNTY		SHEET NO.
18	ELLIS		80

9-07 REVISIONS

P-201107-01

DATE:
FILE:

DISCLAIMER: The use of this standard is governed by the "Texas Engineering Practice Act". No warranty of any kind is made by TxDOT for any purpose whatsoever. TxDOT assumes no responsibility for the conversion of this standard to other formats or for incorrect results or damages resulting from its use.

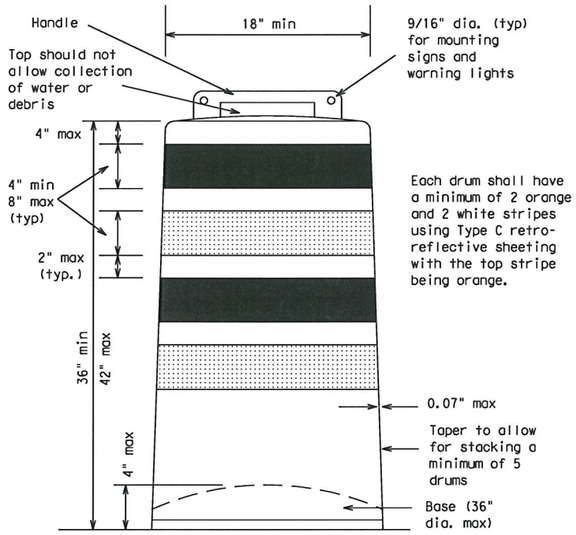

GENERAL NOTES

1. For long term stationary work zones on freeways, drums shall be used as the primary channelizing device.
2. For intermediate term stationary work zones on freeways, drums should be used as the primary channelizing device but may be replaced in tangent sections by vertical panels, or 42" two-piece cones. In tangent sections one-piece cones may be used with the approval of the Engineer but only if personnel are present on the project at all times to maintain the cones in proper position and location.
3. For short term stationary work zones on freeways, drums are the preferred channelizing device but may be replaced in tapers, transitions and tangent sections by vertical panels, two-piece cones or one-piece cones as approved by the Engineer.
4. Drums and all related items shall comply with the requirements of the current version of the "Texas Manual on Uniform Traffic Control Devices" (TMUTCD) and the "Compliant Work Zone Traffic Control Devices List" (CWZTCD).
5. Drums, bases, and related materials shall exhibit good workmanship and shall be free from objectionable marks or defects that would adversely affect their appearance or serviceability.
6. The Contractor shall have a maximum of 24 hours to replace any plastic drums identified for replacement by the Engineer/Inspector. The replacement device must be an approved device.

GENERAL DESIGN REQUIREMENTS

Prequalified plastic drums shall meet the following requirements:

1. Plastic drums shall be a two-piece design; the "body" of the drum shall be the top portion and the "base" shall be the bottom.
2. The body and base shall lock together in such a manner that the body separates from the base when impacted by a vehicle traveling at a speed of 20 MPH or greater but prevents accidental separation due to normal handling and/or air turbulence created by passing vehicles.
3. Plastic drums shall be constructed of lightweight flexible, and deformable materials. The Contractor shall NOT use metal drums or single piece plastic drums as channelization devices or sign supports.
4. Drums shall present a profile that is a minimum of 18 inches in width at the 36 inch height when viewed from any direction. The height of drum unit (body installed on base) shall be a minimum of 36 inches and a maximum of 42 inches.
5. The top of the drum shall have a built-in handle for easy pickup and shall be designed to drain water and not collect debris. The handle shall have a minimum of two widely spaced 9/16 inch diameter holes to allow attachment of a warning light, warning reflector unit or approved compliant sign.
6. The exterior of the drum body shall have a minimum of four alternating orange and white retroreflective circumferential stripes not less than 4 inches nor greater than 8 inches in width. Any non-reflectorized space between any two adjacent stripes shall not exceed 2 inches in width.
7. Bases shall have a maximum width of 36 inches, a maximum height of 4 inches, and a minimum of two footholds of sufficient size to allow base to be held down while separating the drum body from the base.
8. Plastic drums shall be constructed of ultra-violet stabilized, orange, high-density polyethylene (HDPE) or other approved material.
9. Drum body shall have a minimum unballasted weight of 7.7 lbs. and maximum unballasted weight of 11 lbs. The wall of the drum body shall be a minimum of 0.07 inch in thickness. Weight of any drum supplied shall not vary more than 0.5 lb. from that of the prequalified sample.
10. Drum and base shall be marked with manufacturer's name and model number.

RETROREFLECTIVE SHEETING

1. The stripes used on drums shall be constructed of sheeting meeting the color and retroreflectivity requirements of Departmental Materials Specification DMS-8300, "Flat Surface Reflective Sheeting." High Specific Intensity (Type C) retroreflective sheeting shall be supplied unless otherwise specified in the plans.
2. The sheeting shall be suitable for use on and shall adhere to the drum surface such that, upon vehicular impact, the sheeting shall remain adhered in-place and exhibit no delaminating, cracking, or loss of retroreflectivity other than that loss due to abrasion of the sheeting surface.

BALLAST

1. Unballasted bases shall be large enough to hold up to 50 lbs. of sand. This base, when filled with the ballast material, should weigh between 35 lbs (minimum) and 50 lbs (maximum). The ballast may be sand in one to three sandbags separate from the base, sand in a sand-filled plastic base, or other ballasting devices as approved by the Engineer. Stacking of sandbags will be allowed, however height of sandbags above pavement surface may not exceed 12 inches.
2. Bases with built-in ballast shall weigh between 40 lbs. and 50 lbs. Built-in ballast can be constructed of an integral crumb rubber base or a solid rubber base.
3. The ballast shall not be heavy objects, water, or any material that would become hazardous to motorists, pedestrians, or workers when the drum is struck by a vehicle.
4. When used in regions susceptible to freezing, drums shall have drainage holes in the bottoms so that water will not collect and freeze becoming a hazard when struck by a vehicle.
5. Ballast shall not be placed on top of drums.
6. Adhesives may be used to secure base of drums to pavement.

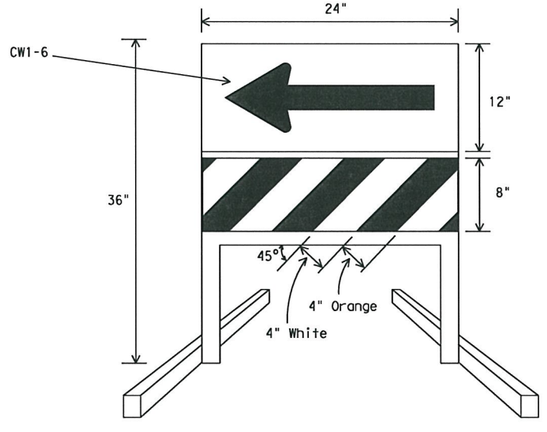

DIRECTION INDICATOR BARRICADE

1. The Direction Indicator Barricade may be used in tapers, transitions, and other areas where specific directional guidance to drivers is necessary.
2. If used, the Direction Indicator Barricade should be used in series to direct the driver through the transition and into the intended travel lane.
3. The Direction Indicator Barricade shall consist of One-Direction Large Arrow (CW1-6) sign in the size shown with a black arrow on a background of Type E Fluopresecent Prismatic Orange above a rail with Type C High Specific Intensity retroreflective sheeting in alternation 4" white and orange stripes sloping downward at an angle of 45 degrees in the direction road users are to pass.
4. Double arrows on the Direction Indicator Barricade will not be allowed.
5. Approved manufacturers are shown on the CWZTCD List. Ballast shall be as approved by the manufacturers instructions.

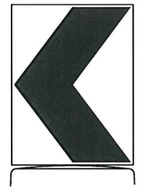

18" x 24" Sign
(Maximum Sign Dimension)
Chevron CW1-8, Opposing Traffic Lane Divider, Driveway sign D70a, Keep Right R4 series or other signs as approved by Engineer

12" x 24"
Vertical Panel
mount with diagonals sloping down towards travel way

Plywood, Aluminum or Metal sign substrates shall NOT be used on plastic drums

SIGNS, CHEVRONS, AND VERTICAL PANELS MOUNTED ON PLASTIC DRUMS

1. Signs used on plastic drums shall be manufactured using substrates listed on the CWZTCD.
2. Chevrons and other work zone signs with an orange background shall be manufactured with Type E (Fluorescent Prismatic) sheeting meeting the color and retroreflectivity requirements of DMS-8300, "Sign Face Material," unless otherwise specified in the plans.
3. Vertical Panels shall be manufactured with orange and white sheeting meeting the requirements of DMS-8300 Type C (High Specific Intensity). Diagonal stripes on Vertical Panels shall slope down toward the intended traveled lane.
4. Other sign messages (text or symbolic) may be used as approved by the Engineer. Sign dimensions shall not exceed 18 inches in width or 24 inches in height.
5. Signs shall be installed using a 1/2 inch bolt (nominal) and nut, two washers, and one locking washer for each connection.
6. Mounting bolts and nuts shall be fully engaged and adequately torqued. Bolts should not extend more than 1/2 inch beyond nuts.
7. Chevrons may be placed on drums on the outside of curves, on merging tapers or on shifting tapers. When used in these locations they may be placed on every drum or spaced not more than on every third drum. A minimum of three (3) should be used at each location called for in the plans.
8. R9-9, R9-10, R9-11 and R9-11a Sidewalk Closed signs which are 24 inches wide may be mounted on plastic drums, with approval of the Engineer.

Texas Department of Transportation
Traffic Operations Division

BARRICADE AND CONSTRUCTION CHANNELIZING DEVICES STANDARD

8 of 12 BC(8)-07

© TxDOT 11-4-02

DN: TXDOT	CK: TXDOT	DW: TXDOT	CK: TXDOT

REVISIONS
4-03
9-07

CONT	SECT	JOB	HIGHWAY
0091	03	021	SH289
DIST	COUNTY		SHEET NO.
18	ALL		81

DATE:
FILE:

P-201107-01

DISCLAIMER:
The use of this standard is governed by the "Texas Engineering Practice Act". No warranty of any kind is made by TxDOT for any purpose whatsoever. TxDOT assumes no responsibility for the conversion of this standard to other formats or for incorrect results or damages resulting from its use.

CHANNELIZING DEVICES

VERTICAL PANELS (VPs)

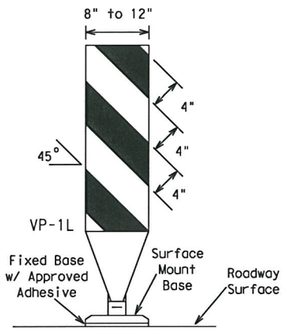

FIXED

(Rigid or self-righting)

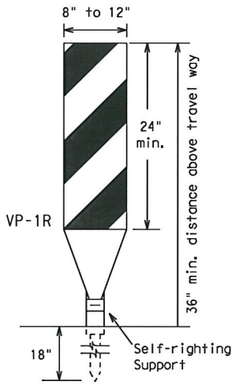

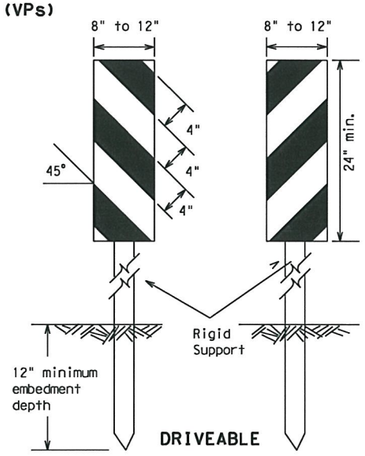

DRIVEABLE

1. Vertical Panels (VP's) are normally used to channelize traffic or divide opposing lanes of traffic.
2. VP's may be used in daytime or nighttime situations. They may be used at the edge of shoulder drop-offs and other areas such as lane transitions where positive daytime and nighttime delineation is required. The Engineer/Inspector shall refer to the Roadway Design Manual Appendix B "Treatment of Pavement Drop-offs in Work Zones" for additional guidelines on the use of VP's for drop-offs.
3. VP's should be mounted back to back if used at the edge of cuts adjacent to two-way two lane roadways. Stripes are to be reflective orange and reflective white and should always slope downward toward the travel lane.
4. VP's used on expressways and freeways or other high speed roadways, shall have a minimum of 270 square inches of retroreflective area facing traffic.
5. Self-righting supports are available with portable base. See "Compliant Work Zone Traffic Control Devices List" (CWZTCD).
6. Sheeting for the VP's shall be retroreflective Type C (High Specific Intensity) conforming to Departmental Material Specification DMS-8300, unless noted otherwise.
7. Where the height of reflective material on the vertical panel is greater than 36 inches, a panel stripe of 6 inches shall be used.

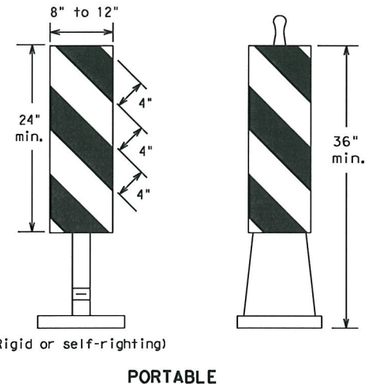

(Rigid or self-righting)

PORTABLE

CHEVRONS

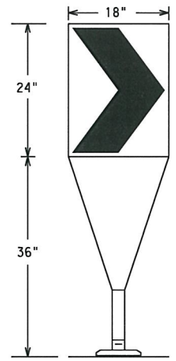

Fixed Base w/ Approved Adhesive (Driveable Base, or Flexible Support can be used)

1. The chevron shall be a vertical rectangle with a minimum size of 12 by 18 inches.
2. Chevrons are intended to give notice of a sharp change of alignment with the direction of travel and provide additional emphasis and guidance for vehicle operators with regard to changes in horizontal alignment of the roadway.
3. Chevrons, when used, shall be erected on the outside of a sharp curve or turn, or on the far side of an intersection. They shall be in line with and at right angles to approaching traffic. Spacing should be such that the motorist always has three in view, until the change in alignment eliminates its need.
4. To be effective, the chevron should be visible for at least 500 feet.
5. Chevrons shall be orange with a black nonreflective legend. Sheeting for the chevron shall be retroreflective Type E (Fluorescent Prismatic) conforming to Departmental Material Specification DMS-8300, unless noted otherwise. The legend shall be black vinyl non-reflective decal sheeting meeting the requirements of DMS-8300.
6. For Long Term Stationary use on tapers or transitions on freeways and divided highways self-righting chevrons may be used to supplement plastic drums but not to replace plastic drums.

GENERAL NOTES:

1. Work Zone channelizing devices illustrated on this sheet may be installed in close proximity to traffic and are suitable for use on high or low speed roadways. The Engineer/Inspector shall ensure that spacing and placement is uniform and in accordance with the "Texas Manual on Uniform Traffic Control Devices" (TMUTCD).
2. Channelizing devices shown on this sheet may have a driveable, fixed or portable base. The requirement for self-righting channelizing devices must be specified in the General Notes or other plan sheets.
3. Channelizing devices on self-righting supports should be used in work zone areas where channelizing devices are frequently impacted by errant vehicles or vehicle related wind gusts making alignment of the channelizing devices difficult to maintain. Locations of these devices shall be detailed elsewhere in the plans. These devices shall conform to the TMUTCD and the "Compliant Work Zone Traffic Control Devices List" (CWZTCD).
4. The Contractor shall maintain devices in a clean condition and replace damaged, nonreflective, faded, or broken devices and bases as required by the Engineer/Inspector. The Contractor shall be required to maintain proper device spacing and alignment.
5. Portable bases shall be fabricated from virgin and/or recycled rubber. The portable bases shall weigh approximately 35 lbs.
6. Pavement surfaces shall be prepared in a manner that ensures proper bonding between the adhesives, the fixed mount bases and the pavement surface. Adhesives shall be prepared and applied according to the manufacturer's recommendations.
7. The installation and removal of channelizing devices shall not cause detrimental effects to the final pavement surfaces, including pavement surface discoloration or surface integrity. Driveable bases shall not be permitted on final pavement surfaces. The Engineer/Inspector shall approve all application and removal procedures of fixed bases.
8. Examples on this sheet are commonly used channelizing devices in work zones. For other devices, refer to the CWZTCD.

OPPOSING TRAFFIC LANE DIVIDERS (OTLD)

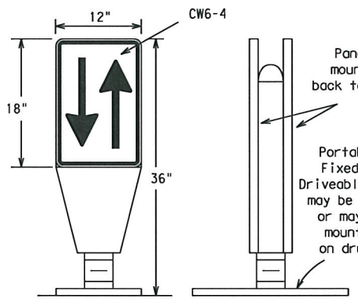

1. Opposing Traffic Lane Dividers (OTLD) are delineation devices designed to convert a normal one-way roadway section to two-way operation. OTLD's are used on temporary centerlines. The upward and downward arrows on the sign's face indicate the direction of traffic on either side of the divider. The base is secured to the pavement with an adhesive or rubber weight to minimize movement caused by a vehicle impact or wind gust.
2. The OTLD may be used in combination with simple tubular markers or VPs.
3. Spacing between the OTLD shall not exceed 500 feet. Tubular markers or VPs placed between the OTLD's should not exceed 100 foot spacing.
4. The OTLD shall be orange with a black non-reflective legend. Sheeting for the OTLD shall be retroreflective Type E (Fluorescent Prismatic) conforming to Departmental Material Specification DMS-8300, unless noted otherwise. The legend shall be black vinyl non-reflective decal sheeting meeting the requirements of DMS-8300.

Posted Speed	Formula	Minimum Desirable Taper Lengths ✻✻ 10' Offset	11' Offset	12' Offset	Suggested Maximum Spacing of Channelizing Devices On a Taper	On a Tangent
30	$L=\frac{WS^2}{60}$	150'	165'	180'	30'	60'-75'
35		205'	225'	245'	35'	70'-90'
40		265'	295'	320'	40'	80'-100'
45	L=WS	450'	495'	540'	45'	90'-110'
50		500'	550'	600'	50'	100'-125'
55		550'	605'	660'	55'	110'-140'
60		600'	660'	720'	60'	120'-150'
65		650'	715'	780'	65'	130'-165'
70		700'	770'	840'	70'	140'-175'
75		750'	825'	900'	75'	150'-185'
80		800'	880'	960'	80'	160'-195'

✻✻Taper lengths have been rounded off.
L=Length of Taper (FT.) W=Width of Offset (FT.)
S=Posted Speed (MPH)

HOLLOW OR WATER BALLASTED SYSTEMS USED AS LONGITUDINAL CHANNELIZING DEVICES OR BARRIERS

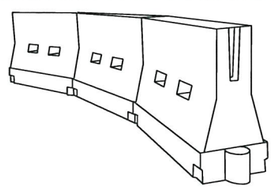

LONGITUDINAL CHANNELIZING DEVICES

1. Longitudinal channelizing devices are crashworthy, lightweight, deformable devices that are highly visible, have good target value and can be connected together. **They are not designed to contain or redirect a vehicle on impact.**
2. Longitudinal channelizing devices may be used instead of a line of cones or drums.
3. Longitudinal channelizing devices shall be placed in accordance to application and installation requirements specific to the device, and used only when shown on the CWZTCD list.
4. Longitudinal channelizing devices should not be used to provide positive protection for obstacles, pedestrians or workers.
5. Longitudinal channelizing devices shall be retroreflective, or supplemented with retroreflective delineation as required for temporary barriers on BC(7)-07.

WATER BALLASTED SYSTEMS USED AS BARRIERS

1. Water ballasted systems used as barriers shall not be used solely to channelize road users, but also to protect the work space per the appropriate NCHRP 350 crashworthiness requirements based on roadway speed and barrier application.
2. Water ballasted systems used to channelize vehicular traffic shall be supplemented with retroreflective delineation or channelizing devices to improve daytime/nighttime visibility. They may also be supplemented with pavement markings.
3. Water ballasted systems used as barriers shall be placed in accordance to application and installation requirements specific to the device, and used only when shown on the CWZTCD list.
4. Water ballasted systems used as barriers should not be used for a merging taper except in low speed (less than 45 MPH) urban areas. When used on a taper in a low speed urban area, the taper shall be delineated and the taper length should be designed to optimize road user operations considering the available geometric conditions.
5. When water ballasted systems used as barriers have blunt ends exposed to traffic, they should be attenuated as per manufacturer recommendations or flared to point outside the clear zone.

If used to channelize pedestrians, longitudinal channelizing devices or water ballasted systems must have a continuous detectable bottom for users of long canes and the top of the unit shall be not less than 32 inches in height.

VERTICAL PANELS & OPPOSING TRAFFIC LANE DIVIDERS SEPARATING TWO-WAY TRAFFIC (Typical application)

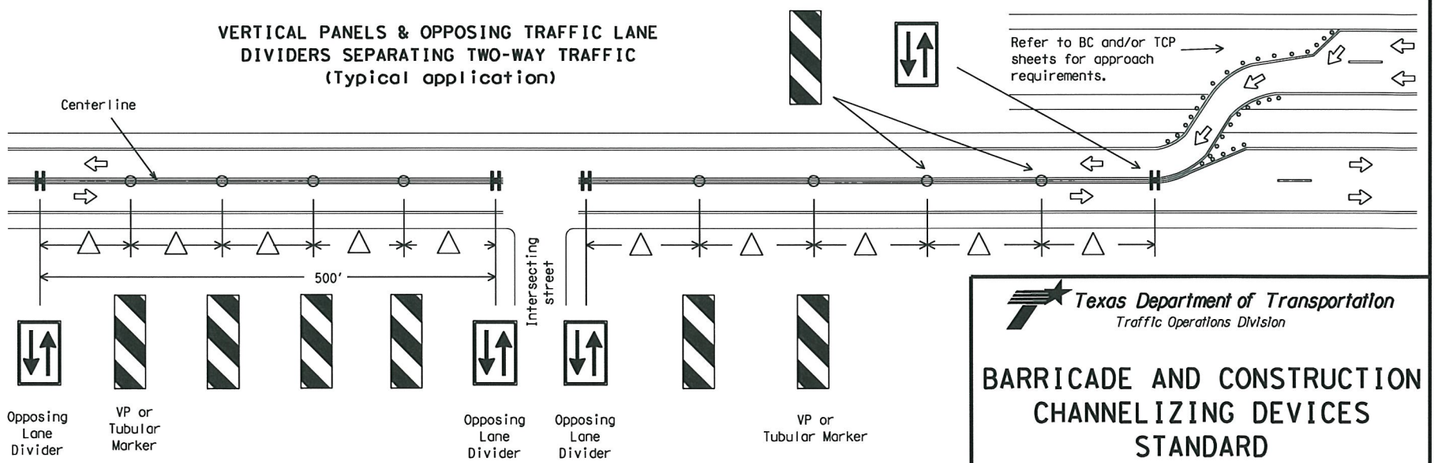

△ Spacing between the VP's or tubular markers shall not exceed 100 feet. On roadways with speeds less than 45 MPH, spacing between the tubular markers or VP's shall be as shown on the channelizing spacing table shown on this page. If the table shows spacing greater than 100 feet based on the roadway speed, then use a maximum of 100 feet spacing between the tubular markers or VP's. Every fifth channelizing device shall be an OTLD, except when the OLTD must be spaced closer to accomodate an intersection. Spacing between the OTLD shall not exceed 500 feet.

Texas Department of Transportation
Traffic Operations Division

BARRICADE AND CONSTRUCTION CHANNELIZING DEVICES STANDARD

9 of 12 BC(9)-07

© TxDOT 11-4-02

DN: TXDOT	CK: TXDOT	DW: TXDOT	CK: TXDOT
CONT	SECT	JOB	HIGHWAY
0091	03	021	SH289
DIST	COUNTY		SHEET NO.
18	ELLIS		82

9-07 REVISIONS

DATE:
FILE:

P-201107-01

DISCLAIMER: The use of this standard is governed by the "Texas Engineering Practice Act". No warranty of any kind is made by TxDOT for any purpose whatsoever. TxDOT assumes no responsibility for the conversion of this standard to other formats or for incorrect results or damages resulting from its use.

TYPE III BARRICADES

1. Refer to the Compliant Work Zone Traffic Control Devices List (CWZTCD) for details of the Type III Barricades and a list of all materials used in the construction of Type III Barricades.
2. Type III Barricades shall be used at each end of construction projects closed to all traffic.
3. Barricades extending across a roadway should have stripes that slope downward in the direction toward which traffic must turn in detouring. When both right and left turns are provided, the chevron striping may slope downward in both directions from the center of the barricade. Where no turns are provided at a closed road striping should slope downward in both directions toward the center of roadway.
4. Striping of rails, for the right side of the roadway, should slope downward to the left. For the left side of the roadway, striping should slope downward to the right.
5. Identification markings may be shown only on the back of the barricade rails. The maximum height of letters and/or company logos used for identification shall be 1".
6. Barricades shall not be placed parallel to traffic unless an adequate clear zone is provided.
7. Warning lights shall NOT be installed on barricades.
8. Where barricades require the use of weights to keep from turning over, the use of sandbags with dry, cohesionless sand is recommended. The sandbags will be tied shut to keep the sand from spilling and to maintain a constant weight. Sand bags shall not be stacked in a manner that covers any portion of a barricade rails reflective sheeting. Rock, concrete, iron, steel or other solid objects will NOT be permitted. Sandbags should weigh a minimum of 35 lbs and a maximum of 50 lbs. Sandbags shall be made of a durable material that tears upon vehicular impact. Rubber (such as tire inner tubes) shall not be used for sandbags. Sandbags shall only be placed along or upon the base supports of the device and shall not be suspended above ground level or hung with rope, wire, chains or other fasteners.
9. Sheeting for barricades shall be retroreflective Type C (High Specific Intensity) conforming to Departmental Material Specfication DMS-8300 unless otherwise noted.

Barricades shall NOT be used as a sign support.

TYPICAL STRIPING DETAIL FOR BARRICADE RAIL

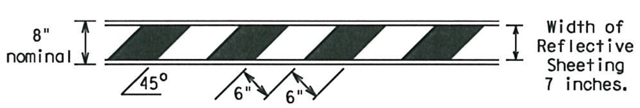

TYPICAL PANEL DETAIL FOR SKID OR POST TYPE BARRICADES

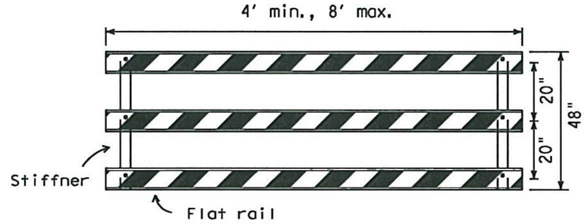

Stiffner may be inside or outside of support, but no more than 2 stiffeners shall be allowed on one barricade.

TYPE III BARRICADE (POST AND SKID) TYPICAL APPLICATION

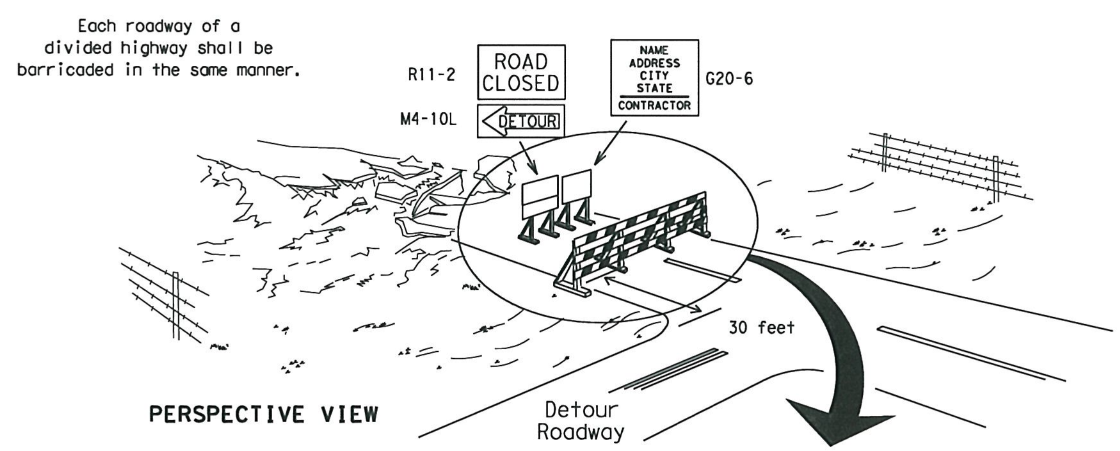

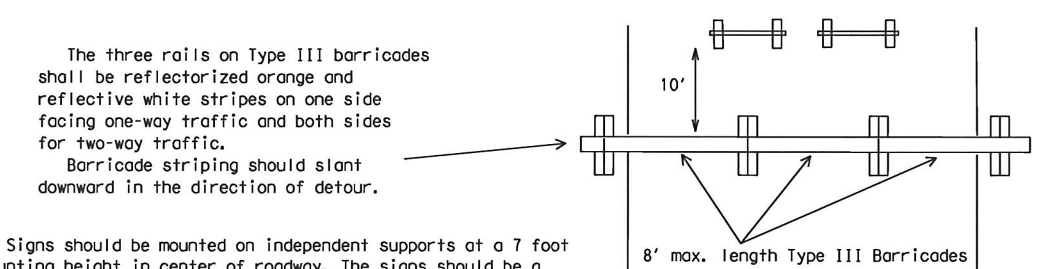

1. Signs should be mounted on independent supports at a 7 foot mounting height in center of roadway. The signs should be a minimum of 10 feet behind Type III Barricades.
2. Advance signing shall be as specified elsewhere in the plans.

CULVERT WIDENING OR OTHER ISOLATED WORK WITHIN THE PROJECT LIMITS

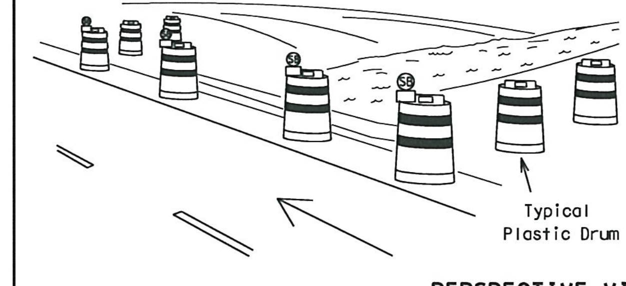

1. Where positive redirectional capability is provided, drums may be omitted.
2. Plastic construction fencing may be used with drums for safety as required in the plans.
3. Vertical Panels on flexible support may be substituted for drums when the shoulder width is less than 4 feet.
4. When the shoulder width is greater than 12 feet, steady-burn lights may be omitted if drums are used.
5. Drums must extend the length of the culvert widening.

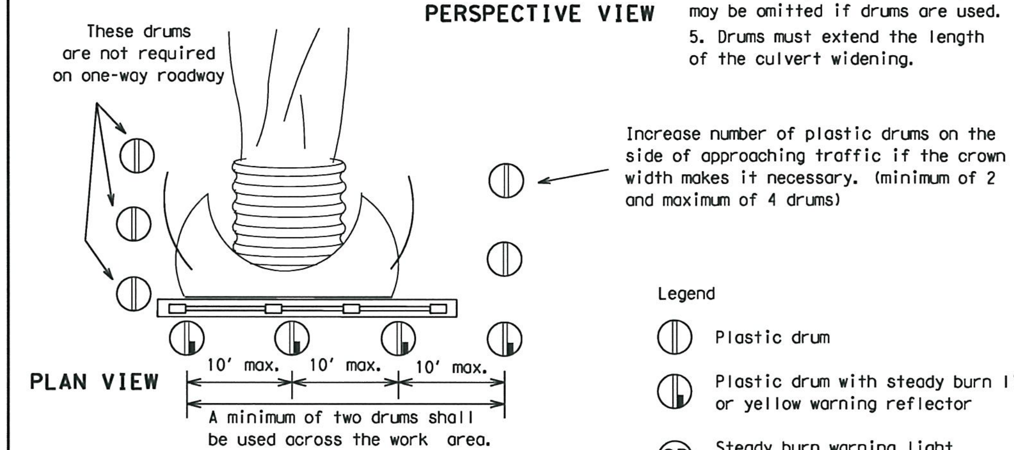

Legend

- Plastic drum
- Plastic drum with steady burn light or yellow warning reflector
- (SB) Steady burn warning light or yellow warning reflector

CONES

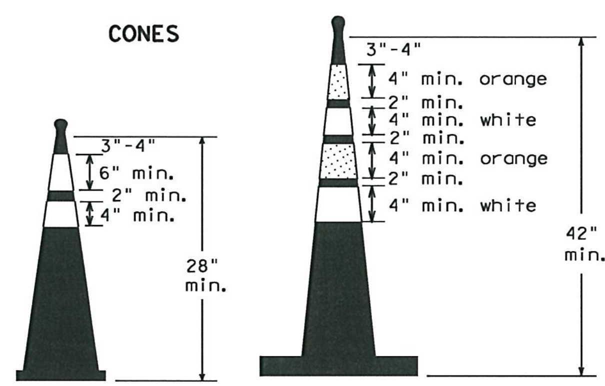

Two-Piece cones

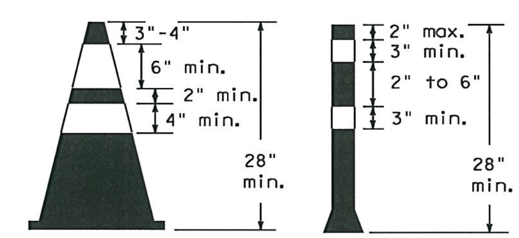

One-Piece cones   Tubular Marker

28" Cones shall have a minimum weight of 9 1/2 lbs.

42" 2-piece cones shall have a minimum weight of 30 lbs. including base.

1. Traffic cones and tubular markers shall be a minimum of 28 inches in height when used either on freeways or at nighttime.
2. Cones or tubular markers shall be predominantly orange, fluorescent red-orange, or fluorescent yellow-orange. They should be kept clean and bright for maximum visibility.
3. Cones used only for daytime operations do not require the reflectorized bands.
4. Cones and tubular markers used for nighttime operations shall be reflectorized. Reflectorized material shall have a smooth, sealed outer surface that displays the same approximate color during the day and night. The reflectorized bands shall be retroreflective Type C (High Specific Intensity) conforming to Departmental Material Specification DMS-8300, unless otherwise noted.
5. When used at night, appropriate personnel shall ensure that cones and tubular markers remain in their proper location and in an upright position.
6. Reflectorization of 28"cones shall consist of a minimum 6 inch band placed at least 3 inches but not more than 4 inches from the top, supplemented by a minimum 4 inch band spaced a minimum of 2 inches below the 6 inch band.
7. Reflectorization of 42" cones shall be provided by alternating 4 to 6" orange and white stripes with orange on top.
8. Reflectorization of tubular markers shall be a minimum of two 3 inch bands placed a maximum of 2 inches from the top with a maximum of 6 inches between bands.
9. One-piece cones or tubular markers are generally suitable for temporary usage (up to 8 hours) with other channelization devices such as vertical panels, drums or two-piece cones for long term usage. Care should be taken to ensure they remain in their proper location and in an upright position.
10. Cones or tubular markers used on each project shall be of the same size and shape.
11. The handle may be designed as a hook or other shape, fabricated from non-rigid materials similar to the cone material, and may extend up to a maximum of 8 inches above the top of cone. Length of the handle shall not be considered with regard to the overall height of the cone.

EDGELINE CHANNELIZER

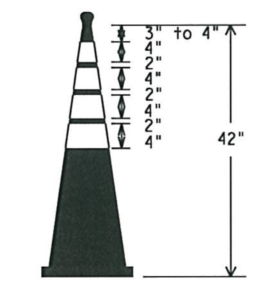

1. This device is intended only for use in place of a vertical panel to channelize traffic by indicating the edge of the travel lane. It is not intended to be used in transitions or tapers.
2. This device shall not be used to separate lanes of traffic (opposing or otherwise) or warn of objects.
3. This device is based on a 42 inch, two-piece cone with an alternate striping pattern: four 4 inch retroreflective bands, with an approximate 2 inch gap between bands. The color of the band should correspond to the color of the edgeline (yellow for left edgeline, white for right edgeline) for which the device is substituted or for which it supplements. The reflectorized bands shall be retroreflective Type C encapsulated bead (High Specific Intensity) conforming to Departmental Material Specification DMS-8300, unless otherwise noted.
4. The base must weigh a minimum of 30 lbs.

TRAFFIC CONTROL FOR MATERIAL STOCKPILES

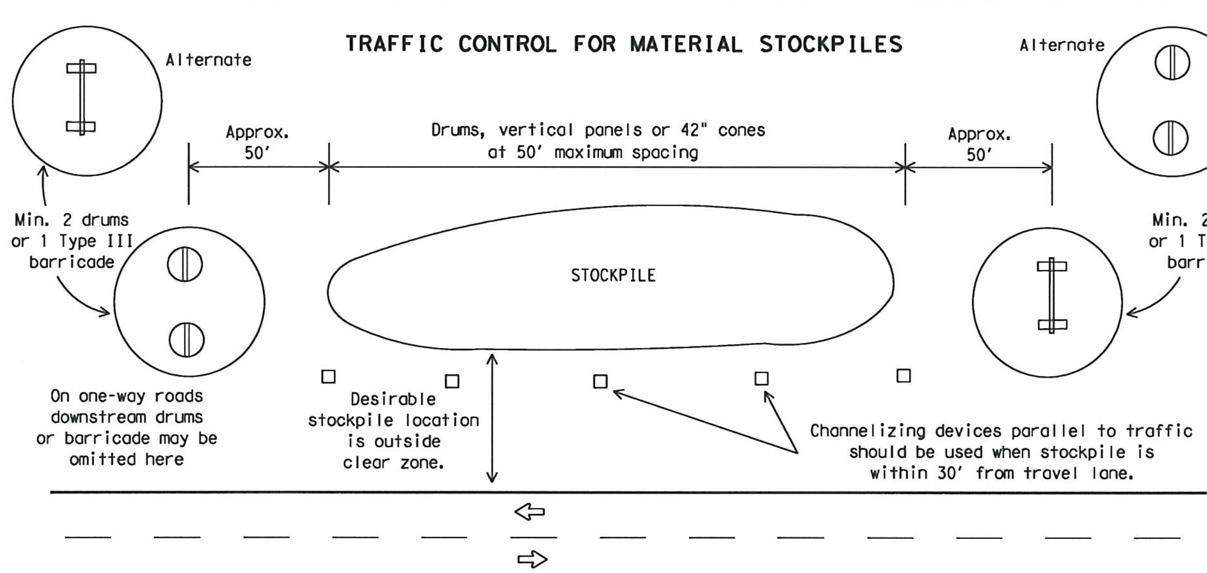

Texas Department of Transportation
Traffic Operations Division

BARRICADE AND CONSTRUCTION CHANNELIZING DEVICES STANDARD

10 of 12   BC(10)-07

©TxDOT 11-4-02	DN: TXDOT	CK: TXDOT	DW: TXDOT	CK: TXDOT
9-07 REVISIONS	CONT 0091	SECT 03	JOB 021	HIGHWAY SH289
	DIST 18		COUNTY	SHEET NO. 83

P-201107-01

1094

DATE:
FILE:

The use of this standard is governed by the "Texas Engineering Practice Act". No warranty of any kind is made by TxDOT for any purpose whatsoever. TxDOT assumes no responsibility for the conversion of this standard to other formats or for incorrect results or damages resulting from its use.

DISCLAIMER:

DATE:
FILE:

WORK ZONE PAVEMENT MARKINGS

GENERAL

1. The Contractor shall be responsible for maintaining work zone and existing pavement markings, in accordance with the standard specifications and special provisions, on all roadways open to traffic within the CSJ limits unless otherwise stated in the plans.
2. Color, patterns and dimensions shall be in conformance with the "Texas Manual on Uniform Traffic Control Devices" (TMUTCD).
3. Additional supplemental pavement marking details may be found in the plans or specifications.
4. Pavement markings shall be installed in accordance with the TMUTCD and as shown on the plans.
5. When short term markings are required on the plans, short term markings shall conform with the TMUTCD, the plans and details as shown on the Standard Plan Sheet WZ(STPM).
6. When standard pavement markings are not in place and the roadway is opened to traffic, DO NOT PASS signs shall be erected to mark the beginning of the sections where passing is prohibited and PASS WITH CARE signs at the beginning of sections where passing is permitted.
7. All work zone pavement markings shall be installed in accordance with Item 662, "Work Zone Pavement Markings."

RAISED PAVEMENT MARKERS

1. Raised pavement markers are to be placed according to the patterns on BC(12).
2. All raised pavement markers used for work zone markings shall meet the requirements of Item 672, "RAISED PAVEMENT MARKERS" and Departmental Material Specification DMS-4200 or DMS-4300.

PREFABRICATED PAVEMENT MARKINGS

1. Removable prefabricated pavement markings shall meet the requirements of DMS-8241.
2. Non-removable prefabricated pavement markings (foil back) shall meet the requirements of DMS-8240.

MAINTAINING WORK ZONE PAVEMENT MARKINGS

1. The Contractor will be responsible for maintaining work zone pavement markings within the work limits.
2. Work zone pavement markings shall be inspected in accordance with the frequency and reporting requirements of work zone traffic control device inspections as required by Form 599.
3. The markings should provide a visible reference for a minimum distance of 300 feet during normal daylight hours and 160 feet when illuminated by automobile low-beam headlights at night, unless sight distance is restricted by roadway geometrics.
4. Markings failing to meet this criteria within the first 30 days after placement shall be replaced at the expense of the Contractor as per Specification Item 662.

REMOVAL OF PAVEMENT MARKINGS

1. Pavement markings that are no longer applicable, could create confusion or direct a motorist toward or into the closed portion of the roadway, shall be removed or obliterated before the roadway is opened to traffic.
2. The above shall not apply to detours in place for less than two weeks, where flaggers and/or sufficient channelizing devices are used in lieu of markings to outline the detour route.
3. Pavement markings shall be removed to the fullest extent possible, so as not to leave a discernable marking. This shall be by any method approved by TxDOT Specification Item 677 for "Eliminating Existing Pavement Markings and Markers".
4. The removal of pavement markings may require resurfacing or seal coating portions of the roadway.
5. Subject to the approval of the Engineer, any method that proves to be successful on a particular type pavement may be used.
6. Blast cleaning may be used but will not be required unless specifically shown in the plans.
7. Over-painting of the markings SHALL NOT BE permitted.
8. Removal of raised pavement markers shall be as directed by the Engineer.
9. Removal of existing pavement markings and markers will be paid for directly in accordance with Item 677, "ELIMINATING EXISTING PAVEMENT MARKINGS AND MARKERS," unless otherwise stated in the plans.
10. Black-out marking tape may be used to cover conflicting existing markings for periods less than two weeks when approved by the Engineer.

Temporary Flexible-Reflective Roadway Marker Tabs

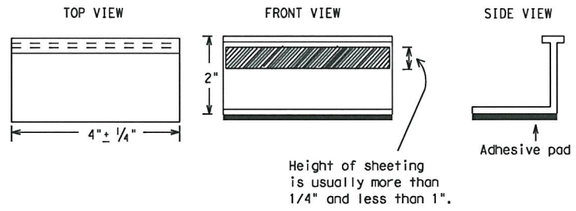

STAPLES OR NAILS SHALL NOT BE USED TO SECURE TEMPORARY FLEXIBLE-REFLECTIVE ROADWAY MARKER TABS TO THE PAVEMENT SURFACE

1. Temporary flexible-reflective roadway marker tabs used as guidemarks shall meet the requirements of DMS-8242.
2. Tabs detailed on this sheet are to be inspected and accepted by the Engineer or designated representative. Sampling and testing is not normally required, however at the option of the Engineer, either "A" or "B" below may be imposed to assure quality before placement on the roadway.
   A. Select five (5) or more tabs at random from each lot or shipment and submit to the Construction Division, Materials and Pavement Section to determine specification compliance.
   B. Select five (5) tabs and perform the following test. Affix five (5) tabs at 24 inch intervals on an asphaltic pavement in a straight line. Using a medium size passenger vehicle or pickup, run over the markers with the front and rear tires at a speed of 35 to 40 miles per hour, four (4) times in each direction. No more than one (1) out of the five (5) reflective surfaces shall be lost or displaced as a result of this test.
3. Small design variances may be noted between tab manufacturers.
4. See Standard Sheet WZ(STPM) for tab placement on new pavements. See Standard Sheet TCP(7-1) for tab placement on seal coat work.

Raised Pavement Markers used as Guidemarks

1. Raised pavement markers used as guidemarks shall be from the approved product list, and meet the requirements of DMS-4200.
2. All temporary construction raised pavement markers provided on a project shall be of the same manufacturer.
3. Adhesive for guidemarks shall be bituminous material hot applied or butyl rubber pad for all surfaces, or thermoplastic for concrete surfaces.

Guidemarks shall be designated as:
YELLOW - (two amber reflective surfaces with yellow body).
WHITE - (one silver reflective surface with white body).

DEPARTMENTAL MATERIAL SPECIFICATIONS

PAVEMENT MARKERS (REFLECTORIZED)	DMS-4200
TRAFFIC BUTTONS	DMS-4300
EPOXY AND ADHESIVES	DMS-6100
BITUMINOUS ADHESIVE FOR PAVEMENT MARKERS	DMS-6130
PREFABRICATED PAVEMENT MARKINGS-PERMANENT	DMS-8240
PREFABRICATED PAVEMENT MARKINGS-REMOVABLE	DMS-8241
TEMPORARY FLEXIBLE-REFLECTIVE ROADWAY MARKER TABS	DMS-8242

A list of prequalified reflective raised pavement markers, non-reflective traffic buttons, roadway marker tabs and other pavement markings can be found at the Material Producer List web address shown on BC(1).

Texas Department of Transportation
Traffic Operations Division

BARRICADE AND CONSTRUCTION PAVEMENT MARKINGS STANDARD

11 of 12 BC(11)-07

©TxDOT February 1998

DN: TXDOT	CK: TXDOT	DW: TXDOT	CK: TXDOT

REVISIONS
2-98
1-02
11-02
9-07

CONT	SECT	JOB	HIGHWAY
0091	03	021	SH289
DIST	COUNTY		SHEET NO.
18	ELLIS		84

1098

P-20110 7-01

DISCLAIMER:
The use of this standard is governed by the "Texas Engineering Practice Act". No warranty of any kind is made by TxDOT for any purpose whatsoever. TxDOT assumes no responsibility for the conversion of this standard to other formats or for incorrect results or damages resulting from its use.

PAVEMENT MARKING PATTERNS

CENTER LINE & NO-PASSING ZONE BARRIER LINES FOR TWO-LANE, TWO-WAY HIGHWAYS

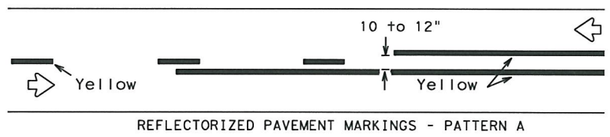

REFLECTORIZED PAVEMENT MARKINGS - PATTERN A

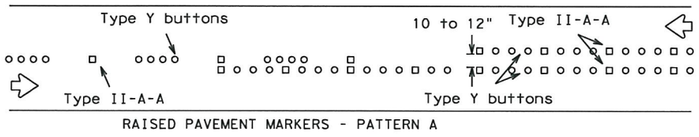

RAISED PAVEMENT MARKERS - PATTERN A

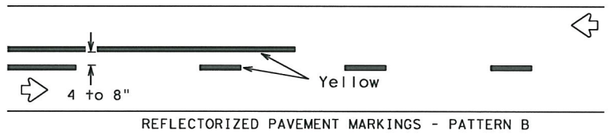

REFLECTORIZED PAVEMENT MARKINGS - PATTERN B

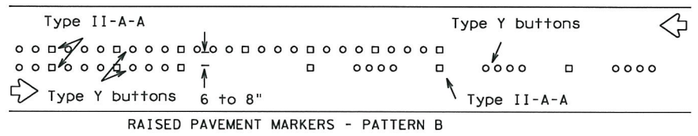

RAISED PAVEMENT MARKERS - PATTERN B

Pattern A is the TXDOT Standard, however Pattern B may be used if approved by the Engineer.
Prefabricated markings may be substituted for reflectorized pavement markings.

EDGE & LANE LINES FOR DIVIDED HIGHWAY

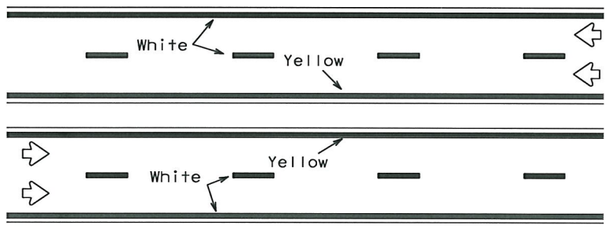

REFLECTORIZED PAVEMENT MARKINGS

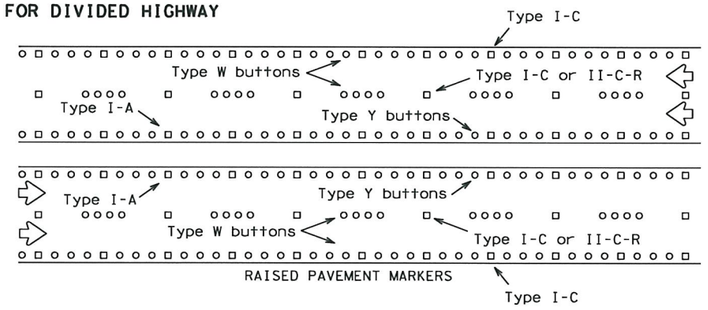

RAISED PAVEMENT MARKERS

Prefabricated markings may be substituted for reflectorized pavement markings.

LANE & CENTER LINES FOR MULTILANE UNDIVIDED HIGHWAYS

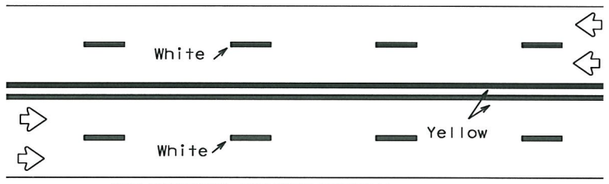

REFLECTORIZED PAVEMENT MARKINGS

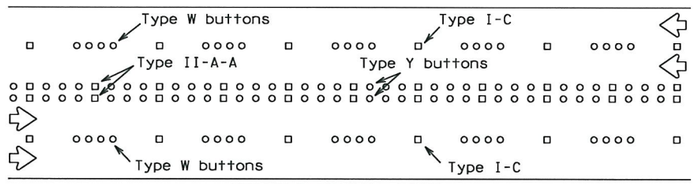

RAISED PAVEMENT MARKERS

Prefabricated markings may be substituted for reflectorized pavement markings.

TWO-WAY LEFT TURN LANE

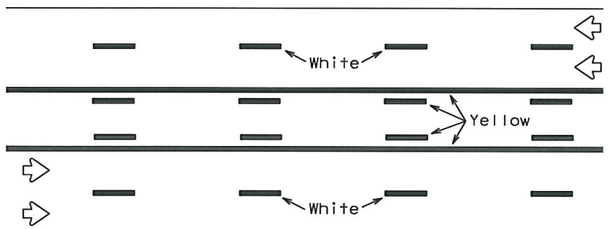

REFLECTORIZED PAVEMENT MARKINGS

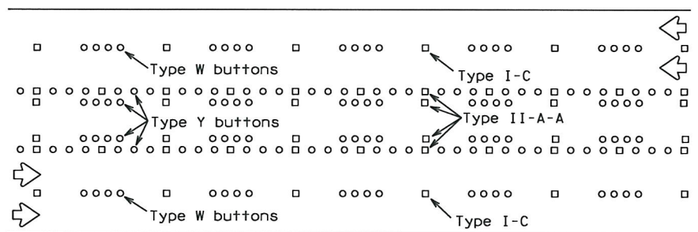

RAISED PAVEMENT MARKERS

Prefabricated markings may be substituted for reflectorized pavement markings.

STANDARD WORK ZONE PAVEMENT MARKINGS DETAILS

SOLID LINES

DOUBLE NO-PASSING LINE

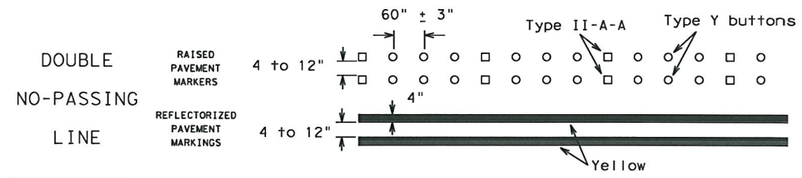

EDGE LINE OR SINGLE NO-PASSING LINE

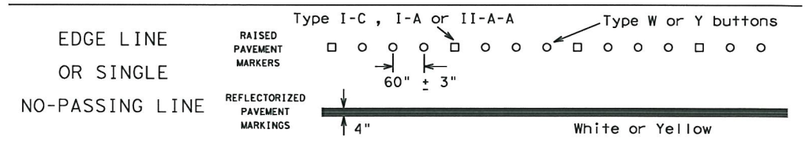

WIDE LINE

(FOR LEFT TURN CHANNELIZING LINE OR CHANNELIZING LINE USED TO DISCOURAGE LANE CHANGING.)

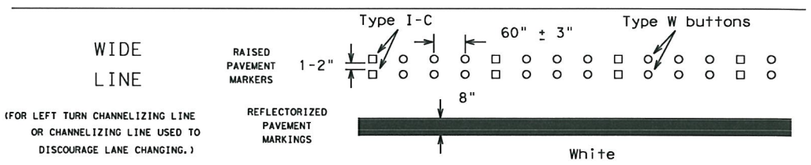

BROKEN LINE

(FOR CENTER LINE OR LANE LINE.)

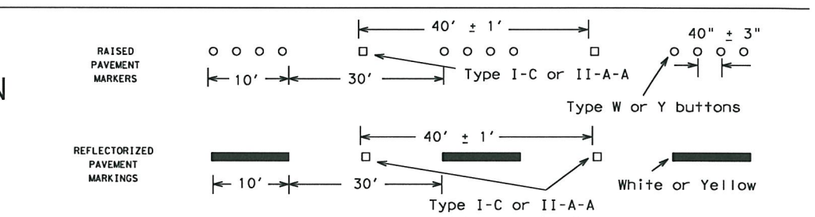

REMOVABLE MARKINGS WITH RAISED PAVEMENT MARKERS

If raised pavement markers are used to supplement REMOVABLE markings, the markers shall be applied to the top of the tape at the approximate mid length of tape used for broken lines or at 20 foot spacing for solid lines. This allows an easier removal of raised pavement markers and tape.

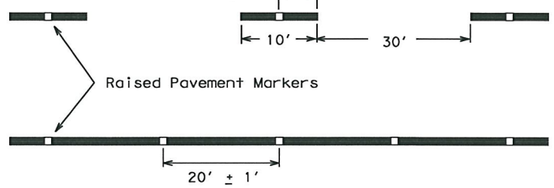

Centerline only - not to be used on edge lines

Raised pavement markers used as standard pavement markings shall be from the approved products list and meet the requirements of Item 672 "RAISED PAVEMENT MARKERS."

Texas Department of Transportation
Traffic Operations Division

BARRICADE AND CONSTRUCTION PAVEMENT MARKING PATTERNS STANDARD

12 of 12 BC(12)-07

© TxDOT February 1998

DN: TXDOT	CK: TXDOT	DW: TXDOT	CK: TXDOT

REVISIONS
1-97
2-98
11-02
9-07

CONT	SECT	JOB	HIGHWAY
0091	03	021	SH289
DIST	COUNTY		SHEET NO.
18			85

P-201107-01

DATE:
FILE:

109C

DISCLAIMER:
The use of this standard is governed by the "Texas Engineering Practice Act". No warranty of any kind is made by TxDOT for any purpose whatsoever. TxDOT assumes no responsibility for the conversion of this standard to other formats or for incorrect results or damages resulting from its use.

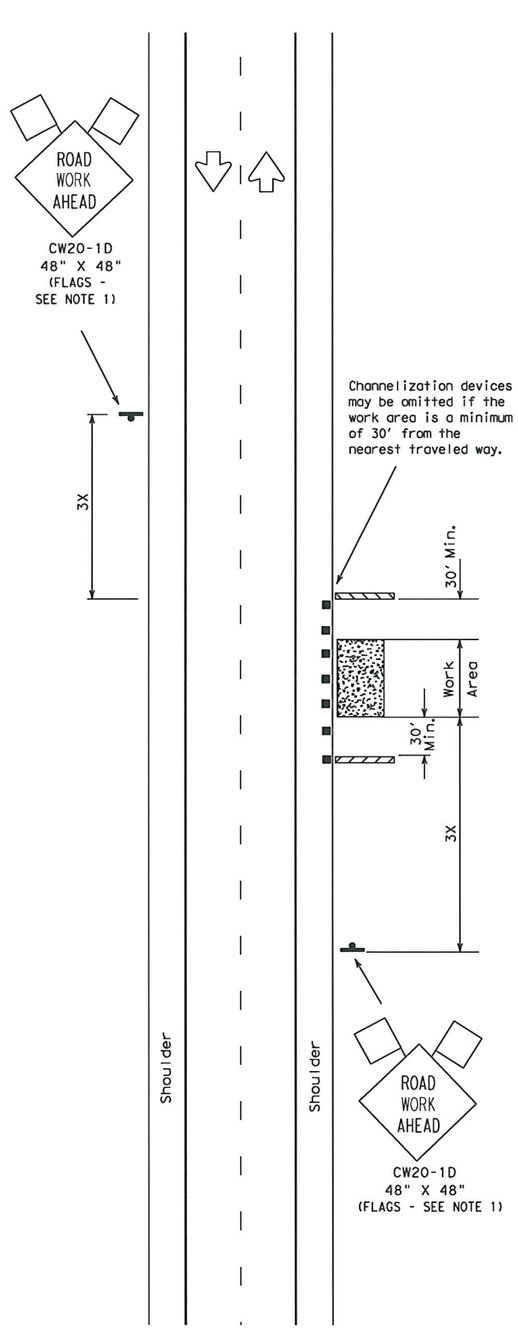

TCP (2-1a)

Work Area Near Shoulder

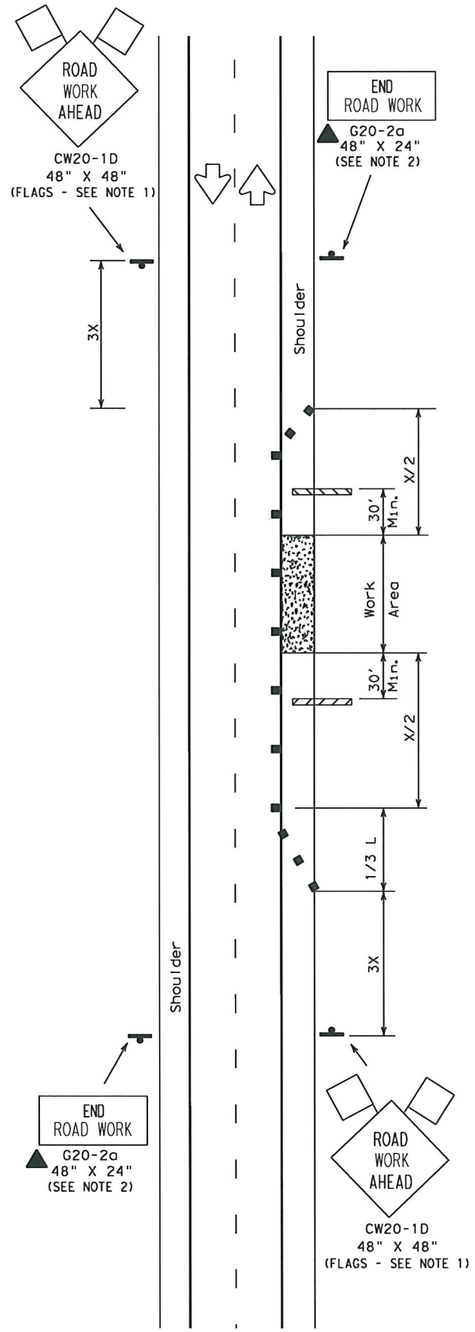

TCP (2-1b)

Work Area on Shoulder

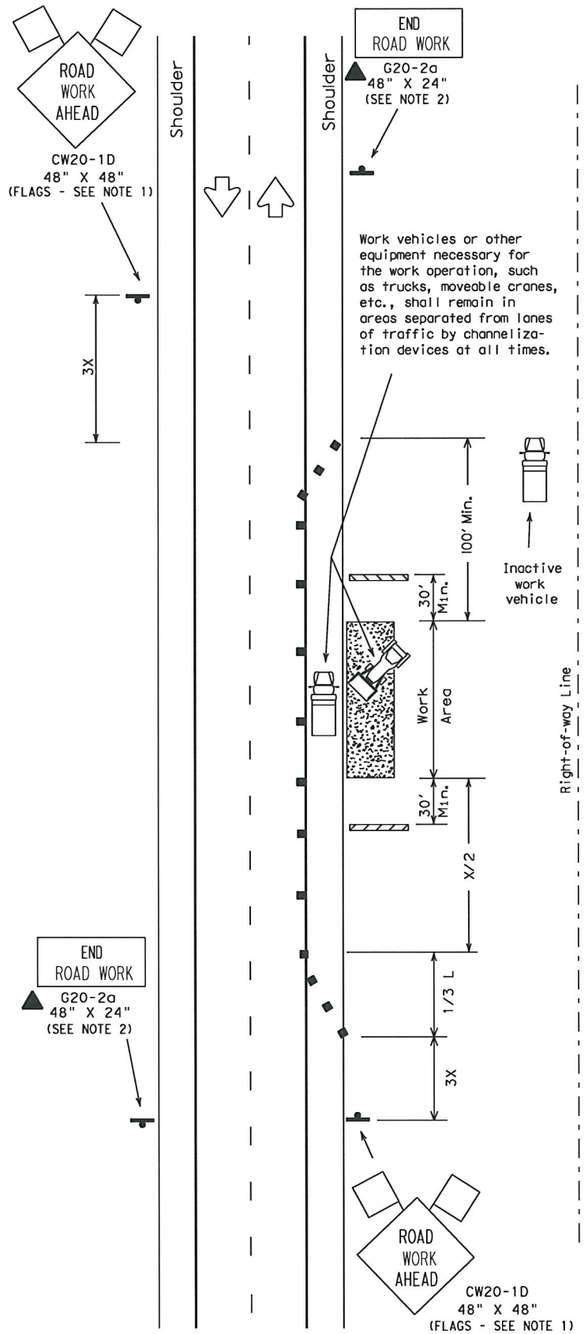

TCP (2-1c)

Work Vehicles on Shoulder

LEGEND

Type III Barricade ■ ■ Channelizing Devices Flag
Heavy Work Vehicle Truck Mounted Attenuator
Trailer Mounted Flashing Arrow Panel (M) Portable Changeable Message Sign
Flagger Sign Post

Posted Speed*	Formula	Minimum Desirable Taper Lengths** 10' Offset	11' Offset	12' Offset	Suggested Maximum Spacing of Device On a Taper	On a Tangent	Minimum Sign Spacing X Distance
30	$L=\frac{WS^2}{60}$	150'	165'	180'	30'	60'-75'	120'
35		205'	225'	245'	35'	70'-90'	160'
40		265'	295'	320'	40'	80'-100'	240'
45	L=WS	450'	495'	540'	45'	90'-110'	320'
50		500'	550'	600'	50'	100'-125'	400'
55		550'	605'	660'	55'	110'-140'	500'
60		600'	660'	720'	60'	120'-150'	*600'
65		650'	715'	780'	65'	130'-165'	*700'
70		700'	770'	840'	70'	140'-175'	*800'

* Conventional Roads Only

** Taper lengths have been rounded off.
L=Length of Taper (FT.) W=Width of Offset (FT.) S=Posted Speed (MPH)

TYPICAL USAGE:				
MOBILE	SHORT DURATION	SHORT TERM STATIONARY	INTERMEDIATE TERM STATIONARY	LONG TERM STATIONARY
	✓	✓	✓	✓

GENERAL NOTES:

1. Unless otherwise stated in the plans, flags attached to signs are REQUIRED.
2. All traffic control devices illustrated are REQUIRED, except those denoted with the triangle symbol may be omitted when stated elsewhere in the plans.
3. Type III barricades are required on both sides of work area at all times. (See BC Standards for barricade details.)
4. Stockpiled material should be placed a minimum 30' from nearest traveled way.
5. Oh high speed facilities advance warning signs should be installed approximately 3X from the work area or from the beginning of a lane or shoulder taper. On low speed facilities the advance warning sign should be placed on the "X" minimum distance.

Only pre-qualified products shall be used. A list of compliant products and their sources may be obtained by writing or faxing:

Standards Engineer
Traffic Operations Division - TE
Texas Department of Transportation
125 East 11th Street
Austin, Texas 78701-2483
Phone (512) 416-3335
Fax (512) 416-3161
E-mail TRF-STANDARD@mailgw.dot.state.tx.us

Texas Department of Transportation
Traffic Operations Division

TRAFFIC CONTROL PLAN

TCP(2-1)-98

©TxDOT December 1985

REVISIONS	DN: TXDOT	CK: TXDOT	DW: TXDOT	CK: TXDOT
2-94	CONT	SECT	JOB	HIGHWAY
8-95	0091	03	021	SH289
1-97	DIST	COUNTY		SHEET NO.
4-98	18			86

DATE:
FILE:

P-201107-01

DISCLAIMER: The use of this standard is governed by the "Texas Engineering Practice Act". No warranty of any kind is made by TxDOT for any purpose whatsoever. TxDOT assumes no responsibility for the conversion of this standard to other formats or for incorrect results or damages resulting from its use.

DATE:
FILE:

SR1-2b
48" x 36"
Legend & Boarder - Black
Background - White
Reflective

Warning Sign Sequence in Opposite Direction same as below.

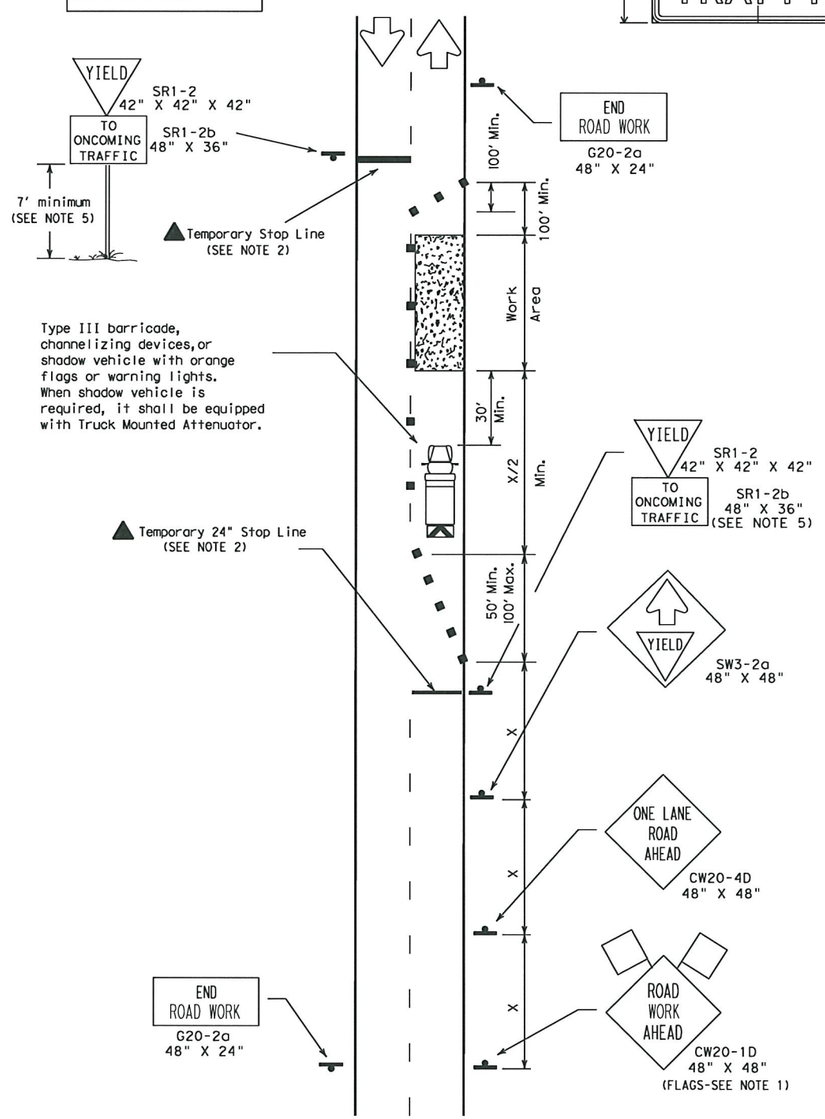

TCP (2-2a)

2-Lane Roadway Without Paved Shoulders
One Lane Closed
Adequate Field of View

The requirement for shadow vehicles will be listed in the project GENERAL NOTES, Item 502, Barricades, Signs and Traffic Handling.

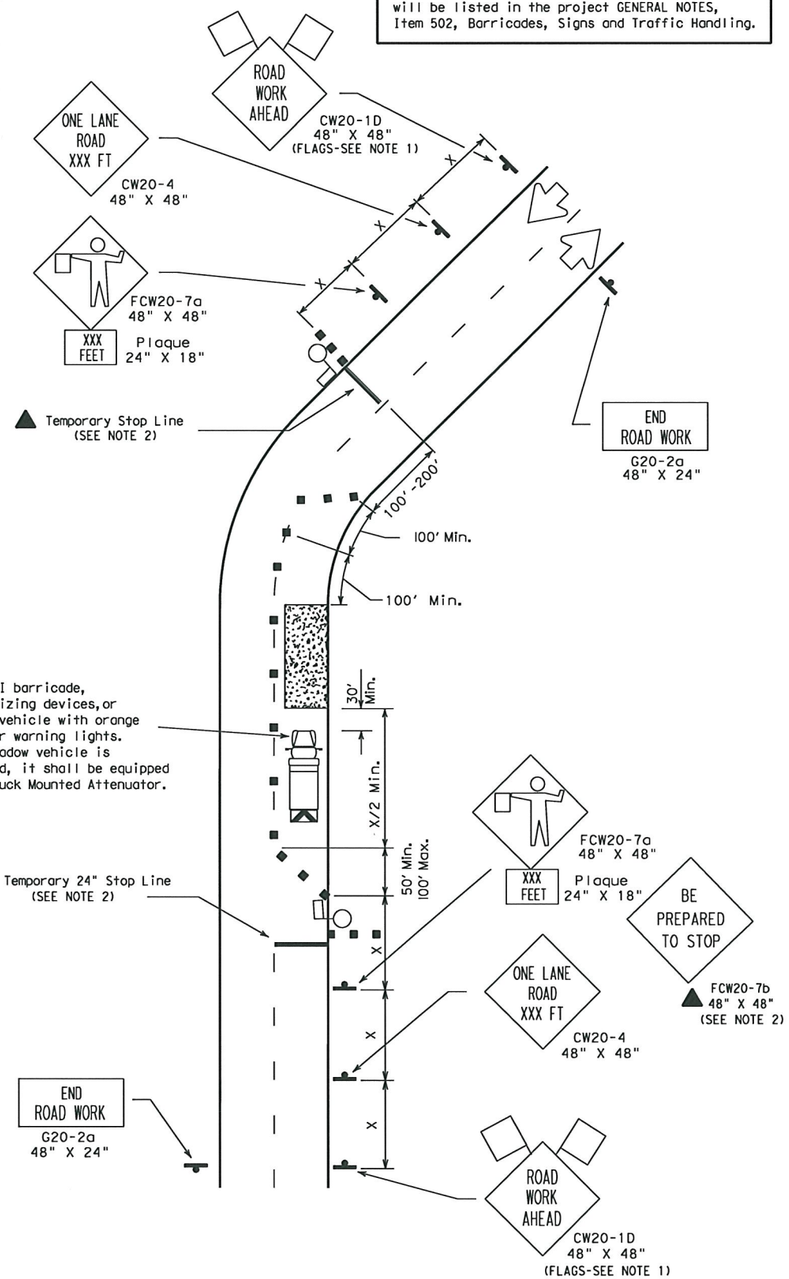

TCP (2-2b)

2-Lane Roadway Without Paved Shoulders
One Lane Closed
Inadequate Field of View

LEGEND

Type III Barricade ■ ■ Channelizing Devices Flag
Heavy Work Vehicle Truck Mounted Attenuator
Trailer Mounted Flashing Arrow Panel (M) Portable Changeable Message Sign
Flagger Sign Post

Posted Speed*	Formula	Minimum Desirable Taper Lengths ** 10' Offset	11' Offset	12' Offset	Suggested Maximum Spacing of Device On a Taper	On a Tangent	Minimum Sign Spacing X Distance
30	$L=\frac{WS^2}{60}$	150'	165'	180'	30'	60'-75'	120'
35		205'	225'	245'	35'	70'-90'	160'
40		265'	295'	320'	40'	80'-100'	240'
45	L=WS	450'	495'	540'	45'	90'-110'	320'
50		500'	550'	600'	50'	100'-125'	400'
55		550'	605'	660'	55'	110'-140'	500'
60		600'	660'	720'	60'	120'-150'	*600'
65		650'	715'	780'	65'	130'-165'	*700'
70		700'	770'	840'	70'	140'-175'	*800'

* Conventional Roads Only

** Taper lengths have been rounded off.
L=Length of Taper (FT.) W=Width of Offset (FT.) S=Posted Speed (MPH)

TYPICAL USAGE: MOBILE	SHORT DURATION	SHORT TERM STATIONARY	INTERMEDIATE TERM STATIONARY	LONG TERM STATIONARY
	✓	✓	✓	

GENERAL NOTES:

1. Flags attached to signs are REQUIRED.
2. All traffic control devices illustrated are REQUIRED, except those denoted with the triangle symbol may be omitted when stated elsewhere in the plans.
3. The BE PREPARED TO STOP sign may be installed after the ONE LANE ROAD XXX FT sign, but proper sign spacing shall be maintained.
4. YIELD sign traffic control may be used on projects with approaches that have adequate sight distance. For projects in urban areas, work zones should be no longer than one half city block. In rural areas on roadways with less than 4000 ADT and work areas should be no longer than 400'.
5. YIELD TO ONCOMING TRAFFIC sign shall be placed on a support at a 7' minimum mounting height.
6. Flaggers should use two-way radios or other methods of communication to control traffic.
7. Length of work area should be based on the ability of flaggers to communicate.
8. For intermediate term situations, when it is not feasible to remove and restore pavement markings, the channelization must be made dominant by using a very close spacing. This is especially important in locations of conflicting information, such as where traffic is directed over a double yellow centerline. In such locations a maximum channelizing device spacing of 10 feet is recommended. The 10 foot channelizing device spacing recommendation is intended for the area of conflicting information and not the entire work zone.

Texas Department of Transportation
Traffic Operations Division

TRAFFIC CONTROL PLAN

TCP(2-2)-03

©TxDOT December 1985

REVISIONS
8-95
1-97
4-98
3-03

DN: TXDOT	CK: TXDOT	DW: TXDOT	CK: TXDOT
CONT	SECT	JOB	HIGHWAY
0091	03	021	SH289
DIST	COUNTY		SHEET NO.
18	[illegible]		87

P 201107 01

DISCLAIMER:
The use of this standard is governed by the "Texas Engineering Practice Act". No warranty of any kind is made by TxDOT for any purpose whatsoever. TxDOT assumes no responsibility for the conversion of this standard to other formats or for incorrect results or damages resulting from its use.

DATE:
FILE:

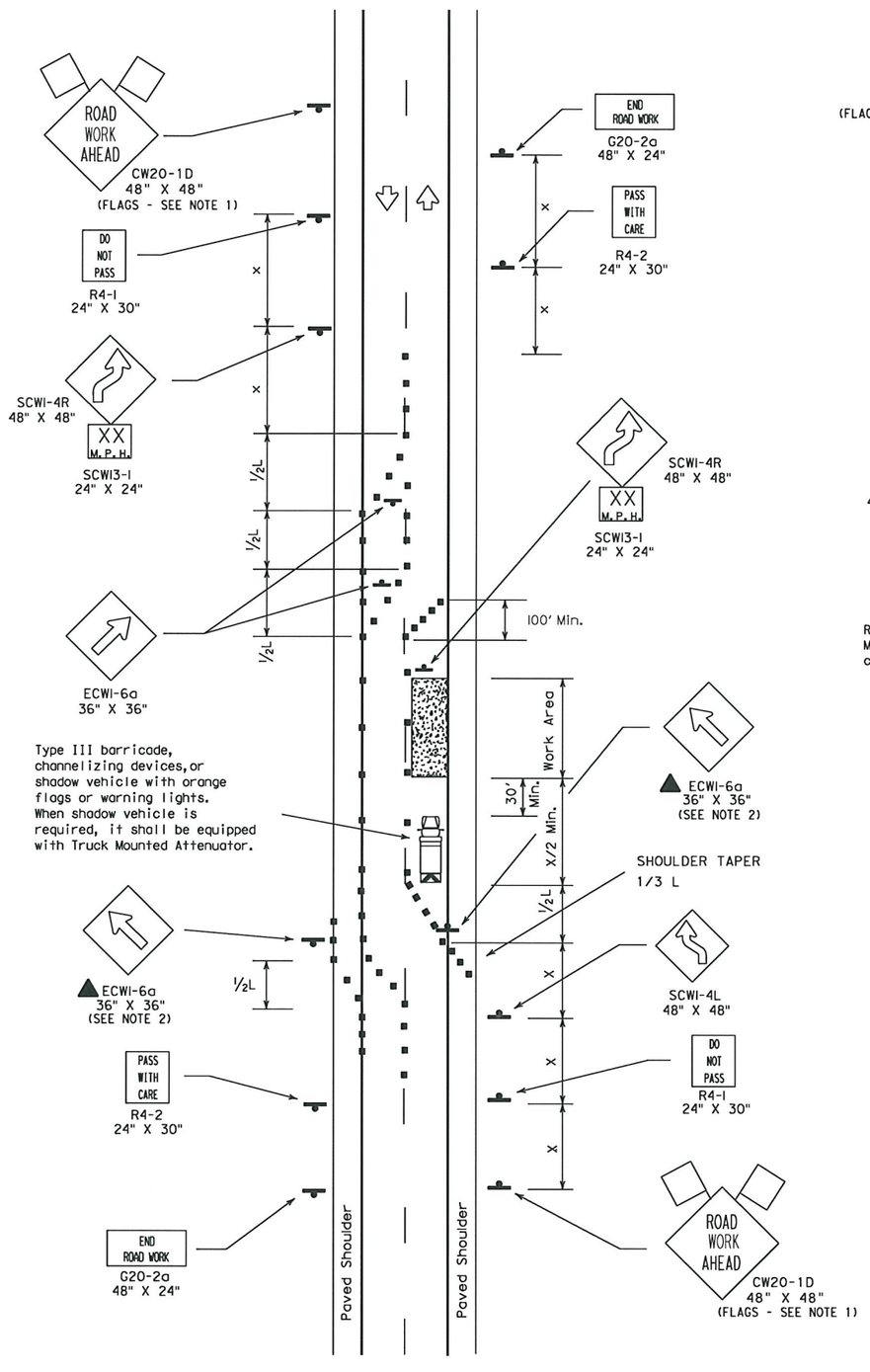

Type III barricade, channelizing devices, or shadow vehicle with orange flags or warning lights. When shadow vehicle is required, it shall be equipped with Truck Mounted Attenuator.

TCP (2-3a)

2-Lane Roadway With Paved Shoulders
One Lane Closed
Adequate Field of View

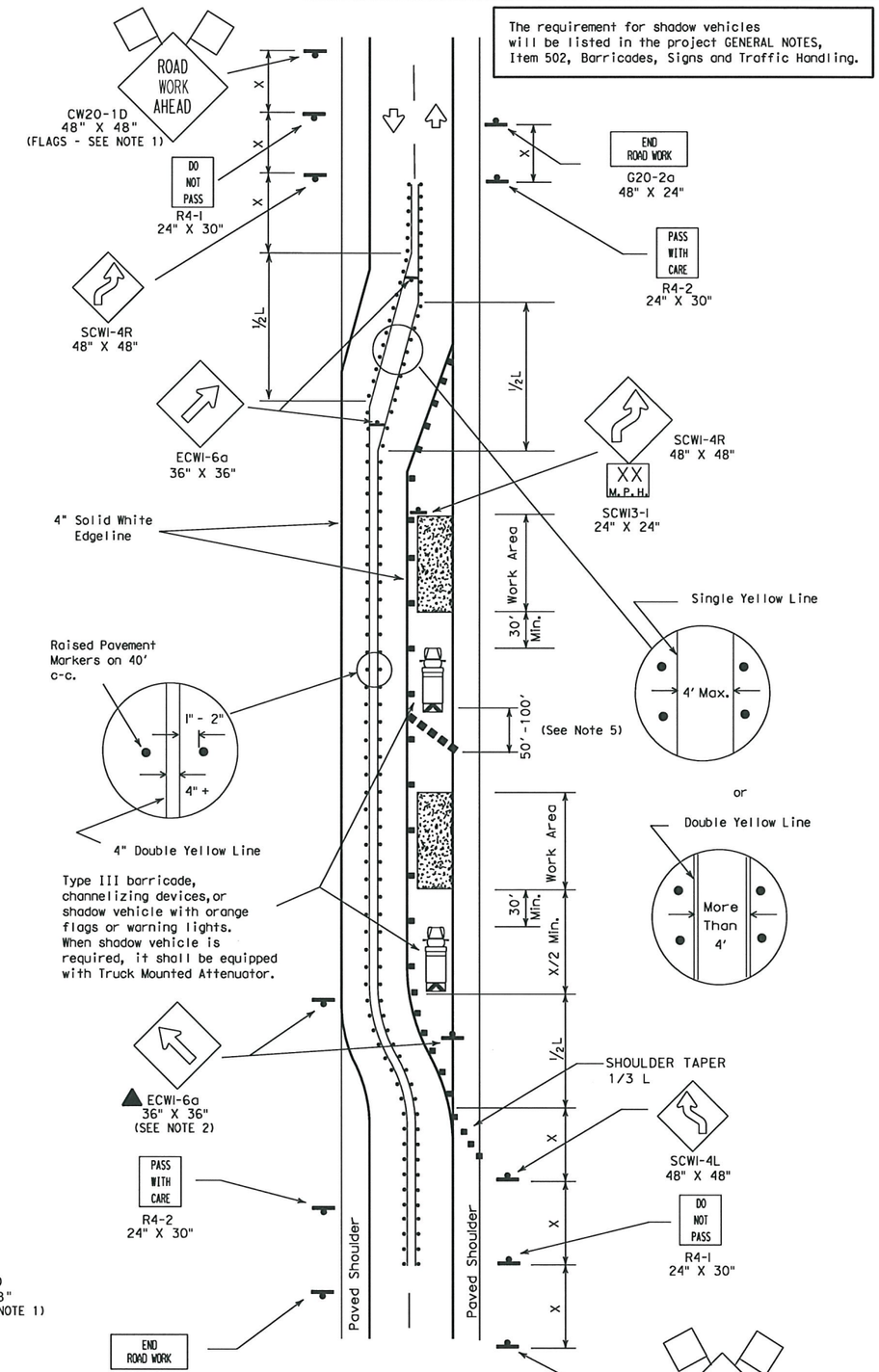

TCP (2-3b)

2-Lane Roadway With Paved Shoulders
One Lane Closed
Inadequate Field of View

The requirement for shadow vehicles will be listed in the project GENERAL NOTES, Item 502, Barricades, Signs and Traffic Handling.

LEGEND

Type III Barricade ■ ■ Channelizing Devices Flag
Heavy Work Vehicle Truck Mounted Attenuator
Trailer Mounted Flashing Arrow Panel (M) Portable Changeable Message Sign
Flagger Sign Post
• • • Raised Pavement Markers Type II-A-A (40' spacing)

Posted Speed ✳	Formula	Minimum Desirable Taper Lengths ✳✳ 10' Offset	11' Offset	12' Offset	Suggested Maximum Spacing of Device On a Taper	On a Tangent	Minimum Sign Spacing X Distance
30	$L=\frac{WS^2}{60}$	150'	165'	180'	30'	60'-75'	120'
35		205'	225'	245'	35'	70'-90'	160'
40		265'	295'	320'	40'	80'-100'	240'
45	L=WS	450'	495'	540'	45'	90'-110'	320'
50		500'	550'	600'	50'	100'-125'	400'
55		550'	605'	660'	55'	110'-140'	500'
60		600'	660'	720'	60'	120'-150'	✳600'
65		650'	715'	780'	65'	130'-165'	✳700'
70		700'	770'	840'	70'	140'-175'	✳800'

✳ Conventional Roads Only

✳✳ Taper lengths have been rounded off.
L=Length of Taper (FT.) W=Width of Offset (FT.) S=Posted Speed (MPH)

TYPICAL USAGE:				
MOBILE	SHORT DURATION	SHORT TERM STATIONARY	INTERMEDIATE TERM STATIONARY	LONG TERM STATIONARY
		✓	✓	✓ (2-3b only)

GENERAL NOTES:

1. Unless otherwise stated in the plans, flags attached to signs are REQUIRED.
2. All traffic control devices illustrated are REQUIRED, except those denoted with the triangle symbol may be omitted when stated elsewhere in the plans.
3. When work area will be in place more than one day but less than 2 weeks existing pavement markings may remain in place. Channelizing devices shall be used to separate traffic.
4. Flagger control should NOT be used unless roadway conditions or heavy traffic volume require additional emphasis to safely control traffic. Flagger should be positioned at end of traffic queue.
5. DO NOT PASS, PASS WITH CARE, and construction regulatory speed zone signs may be installed within ROAD WORK AHEAD signs. Proper spacing of signs shall be maintained.
6. When the work zone will be in place more than two weeks, conflicting pavement markings shall be removed, unless approved by the Engineer. New markings shall be placed and maintained to the satisfaction of the Engineer.
7. For intermediate term situations, when it is not feasible to remove and restore pavement markings, the channelization must be made dominant by using a very close spacing. This is especially important in locations of conflicting information, such as where traffic is directed over a double yellow centerline. In such locations a maximum channelizing device spacing of 10 feet is recommended. The 10 foot channelizing device spacing recommendation is intended for the area of conflicting information and not the entire work zone.

Texas Department of Transportation
Traffic Operations Division

TRAFFIC CONTROL PLAN

TCP(2-3)-03

© TxDOT December 1985

REVISIONS	DN: TXDOT	CK: TXDOT	DW: TXDOT	CK: TXDOT
8-95	CONT	SECT	JOB	HIGHWAY
1-97	0091	03	021	SH289
4-98	DIST	COUNTY		SHEET NO.
3-03	18	ALL		88

P-201107-01

DISCLAIMER:
The use of this standard is governed by the "Texas Engineering Practice Act". No warranty of any kind is made by TxDOT for any purpose whatsoever. TxDOT assumes no responsibility for the conversion of this standard to other formats or for incorrect results or damages resulting from its use.

DATE:
FILE:

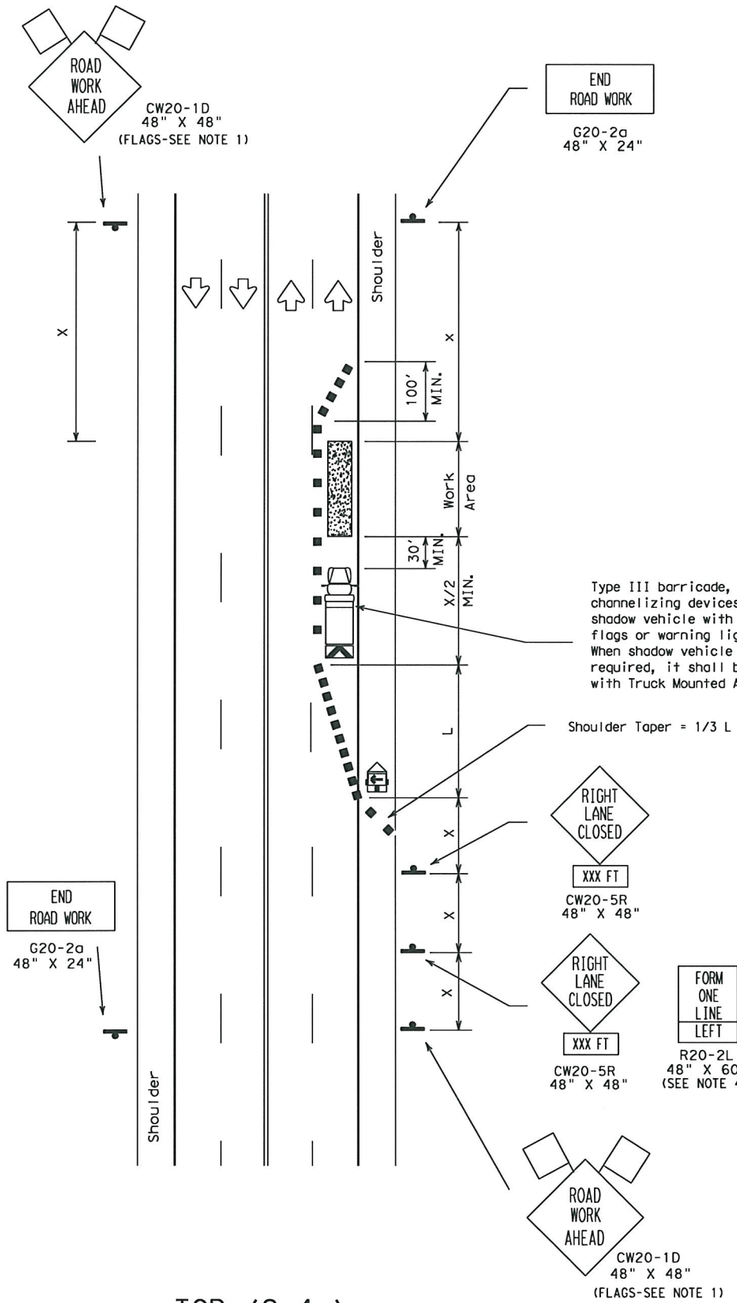

TCP (2-4a)

One Lane Closed
Less Than Two Weeks

The requirement for shadow vehicles will be listed in the project GENERAL NOTES, Item 502, Barricades, Signs and Traffic Handling.

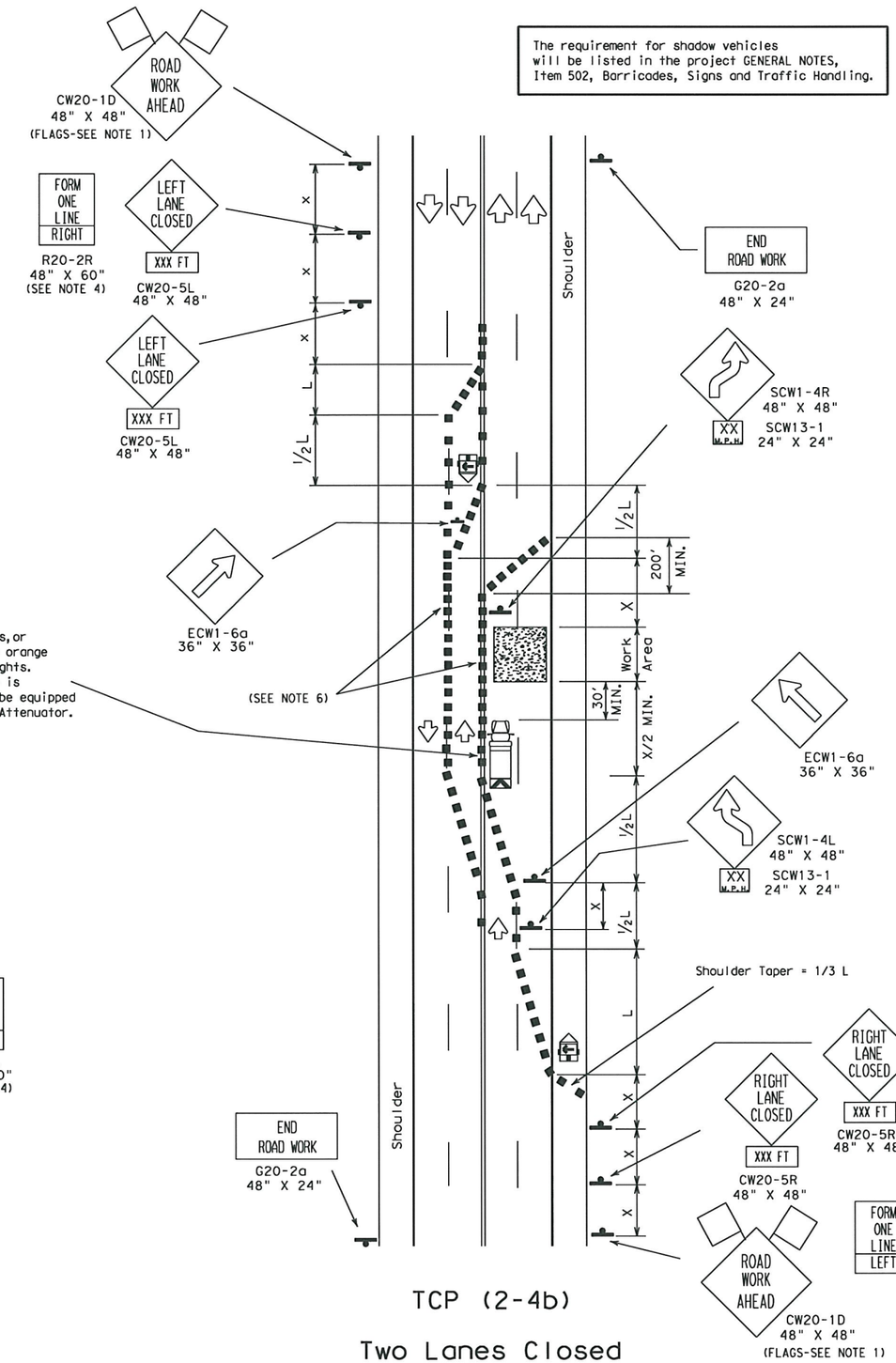

TCP (2-4b)

Two Lanes Closed
Less Than Two Weeks

LEGEND

Type III Barricade ■ ■ Channelizing Devices Flag
Heavy Work Vehicle Truck Mounted Attenuator
Trailer Mounted Flashing Arrow Panel (M) Portable Changeable Message Sign
Flagger Sign Post

Posted Speed ✳	Formula	Minimum Desirable Taper Lengths ✳✳ 10' Offset	11' Offset	12' Offset	Suggested Maximum Spacing of Device On a Taper	On a Tangent	Minimum Sign Spacing X Distance
30	$L = \frac{WS^2}{60}$	150'	165'	180'	30'	60'-75'	120'
35		205'	225'	245'	35'	70'-90'	160'
40		265'	295'	320'	40'	80'-100'	240'
45	L=WS	450'	495'	540'	45'	90'-110'	320'
50		500'	550'	600'	50'	100'-125'	400'
55		550'	605'	660'	55'	110'-140'	500'
60		600'	660'	720'	60'	120'-150'	✳600'
65		650'	715'	780'	65'	130'-165'	✳700'
70		700'	770'	840'	70'	140'-175'	✳800'

✳ Conventional Roads Only

✳✳ Taper lengths have been rounded off.
L=Length of Taper (FT.) W=Width of Offset (FT.) S=Posted Speed (MPH)

TYPICAL USAGE:				
MOBILE	SHORT DURATION	SHORT TERM STATIONARY	INTERMEDIATE TERM STATIONARY	LONG TERM STATIONARY
		✓	✓	

GENERAL NOTES:

1. Unless otherwise stated in the plans, flags attached to signs are REQUIRED.
2. TCP (2-4b) shall be used only on projects that will be at a location for less than two weeks.
3. Existing pavement markings may remain in place for projects less than two weeks in duration.
4. The FORM ONE LINE LEFT (or RIGHT) sign may be used following the RIGHT (or LEFT) LANE CLOSED XXX FT sign. Spacing distance between signs should be the minimum distance indicated.
5. Downstream taper is optional. When used, it should be 100' minimum length per lane.
6. For intermediate term situations, when it is not feasible to remove and restore pavement markings, the channelization must be made dominant by using a very close spacing. This is especially important in locations of conflicting information, such as where traffic is directed over a double yellow centerline. In such locations a maximum channelizing device spacing of 10 feet is recommended. The 10 foot channelizing device spacing recommendation is intended for the area of conflicting information and not the entire work zone.

Texas Department of Transportation
Traffic Operations Division

TRAFFIC CONTROL PLAN

TCP(2-4)-03

©TxDOT December 1985

DN: TXDOT	CK: TXDOT	DW: TXDOT	CK: TXDOT

REVISIONS	CONT	SECT	JOB	HIGHWAY
8-95	0091	03	021	SH289
1-97	DIST	COUNTY		SHEET NO.
4-98	18			89
3-03				

P 201107 01

DISCLAIMER: The use of this standard is governed by the "Texas Engineering Practice Act". No warranty of any kind is made by TxDOT for any purpose whatsoever. TxDOT assumes no responsibility for the conversion of this standard to other formats or for incorrect results or damages resulting from its use.

DATE:
FILE:

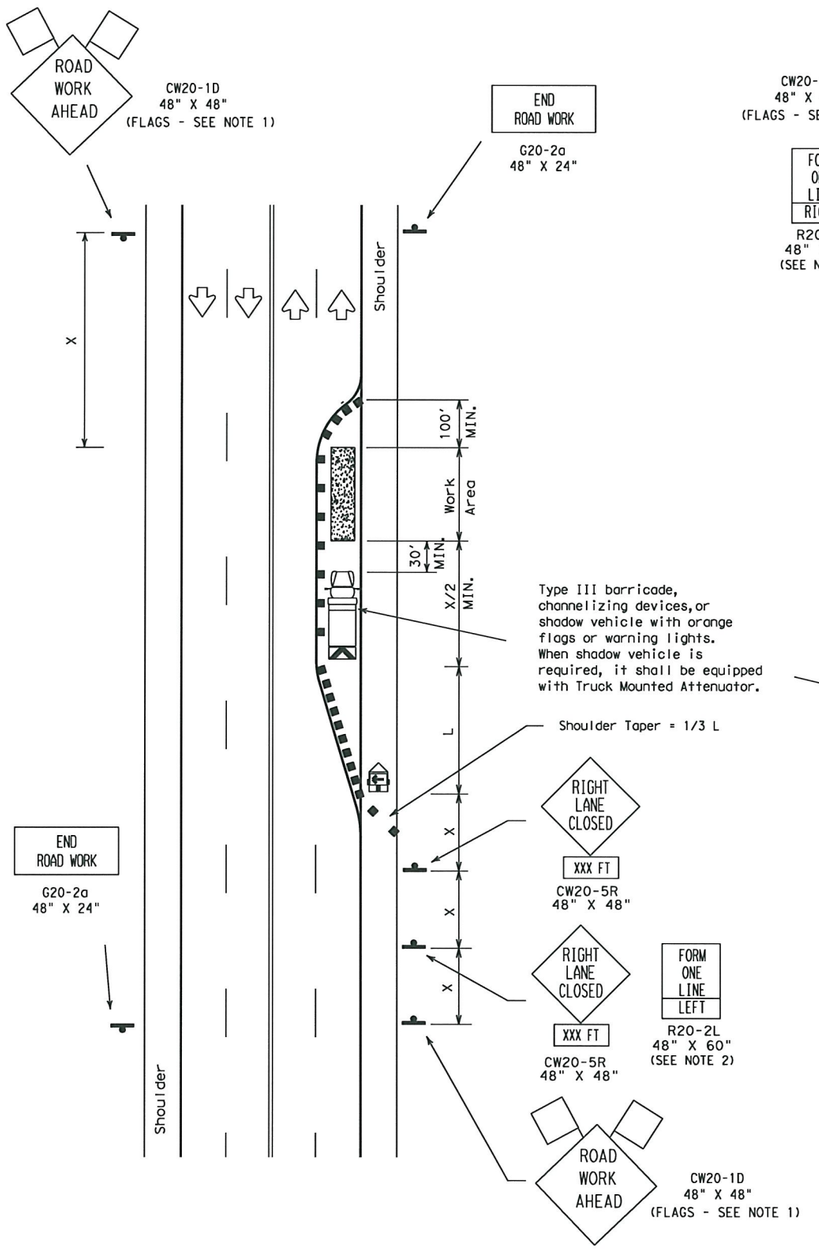

TCP (2-5a)
One Lane Closed
More Than Two Weeks

The requirement for shadow vehicles will be listed in the project GENERAL NOTES, Item 502, Barricades, Signs and Traffic Handling.

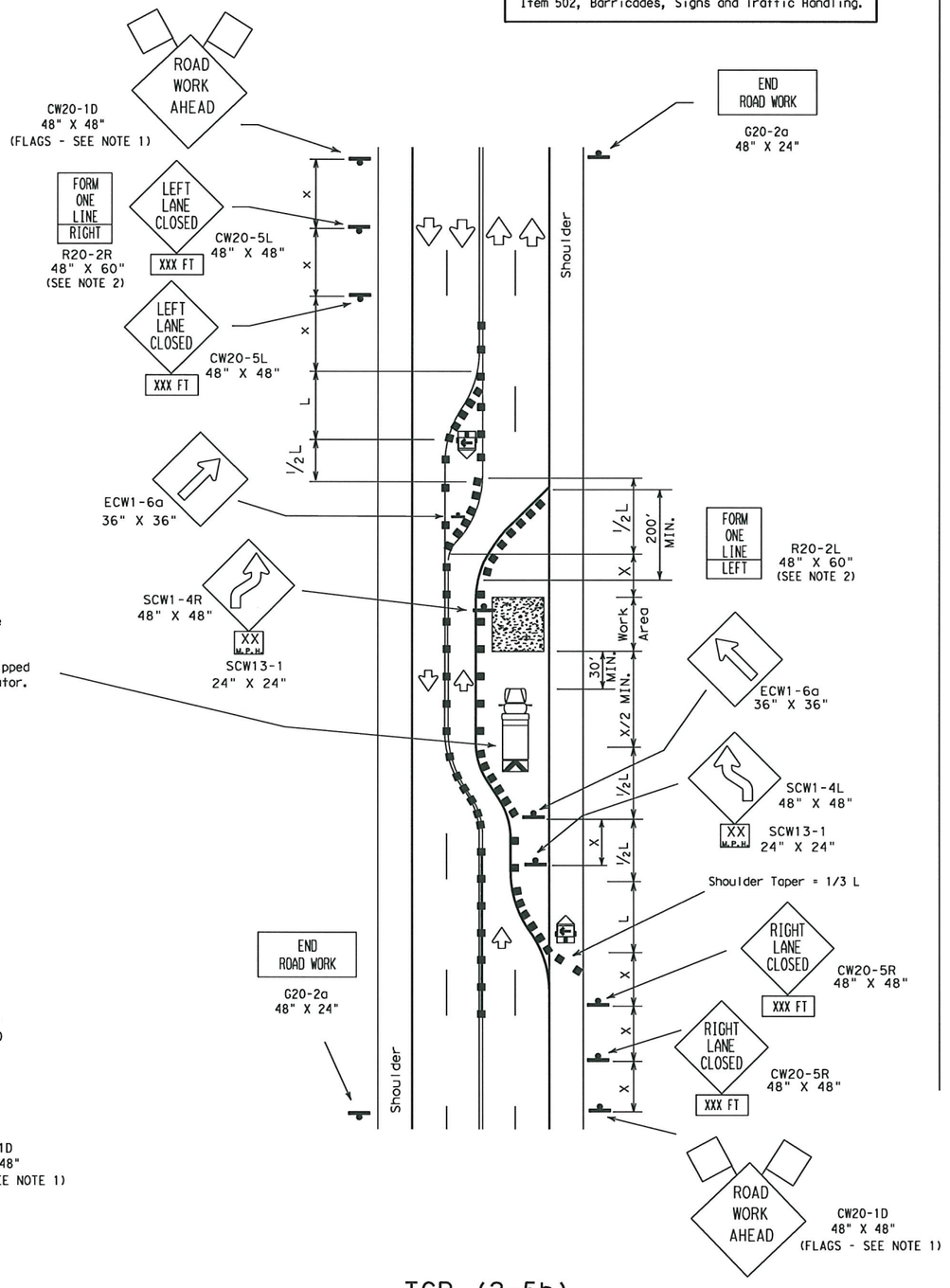

TCP (2-5b)
Two Lanes Closed
More Than Two Weeks

LEGEND

Type III Barricade ■ ■ Channelizing Devices Flag
Heavy Work Vehicle Truck Mounted Attenuator
Trailer Mounted Flashing Arrow Panel (M) Portable Changeable Message Sign
Flagger Sign Post

Posted Speed*	Formula	Minimum Desirable Taper Lengths ** 10' Offset	11' Offset	12' Offset	Suggested Maximum Spacing of Device On a Taper	On a Tangent	Minimum Sign Spacing X Distance
30	$L=\frac{WS^2}{60}$	150'	165'	180'	30'	60'-75'	120'
35		205'	225'	245'	35'	70'-90'	160'
40		265'	295'	320'	40'	80'-100'	240'
45	L=WS	450'	495'	540'	45'	90'-110'	320'
50		500'	550'	600'	50'	100'-125'	400'
55		550'	605'	660'	55'	110'-140'	500'
60		600'	660'	720'	60'	120'-150'	*600'
65		650'	715'	780'	65'	130'-165'	*700'
70		700'	770'	840'	70'	140'-175'	*800'

* Conventional Roads Only

** Taper lengths have been rounded off.
L=Length of Taper (FT.) W=Width of Offset (FT.) S=Posted Speed (MPH)

TYPICAL USAGE:				
MOBILE	SHORT DURATION	SHORT TERM STATIONARY	INTERMEDIATE TERM STATIONARY	LONG TERM STATIONARY
			✓	✓

GENERAL NOTES:

1. Unless otherwise stated in the plans, flags attached to signs are REQUIRED.
2. The FORM ONE LINE LEFT (or RIGHT) sign may be used following the RIGHT (or LEFT) LANE CLOSED XXX FT sign. Spacing distance between signs should be the minimum distance indicated.
3. When the work zone will be in place more than two weeks, conflicting pavement markings shall be removed. New markings shall be installed and maintained to the satisfaction of the Engineer.
4. Downstream taper is optional. When used, it should be 100' minimum length per lane.
5. For intermediate term situations, when it is not feasible to remove and restore pavement markings, the channelization must be made dominant by using a very close spacing. This is especially important in locations of conflicting information, such as where traffic is directed over a double yellow centerline. In such locations a maximum channelizing device spacing of 10 feet is recommended. The 10 foot channelizing device spacing recommendation is intended for the area of conflicting information and not the entire work zone.

Texas Department of Transportation
Traffic Operations Division

TRAFFIC CONTROL PLAN

TCP(2-5)-03

©TxDOT December 1985

DN: TXDOT	CK: TXDOT	DW: TXDOT	CK: TXDOT

REVISIONS	CONT	SECT	JOB	HIGHWAY
8-95	0091	03	021	SH289
1-97	DIST	COUNTY		SHEET NO.
4-98	18	[illegible]		90
3-03				

P-201107-01

DISCLAIMER: The use of this standard is governed by the "Texas Engineering Practice Act". No warranty of any kind is made by TxDOT for any purpose whatsoever. TxDOT assumes no responsibility for the conversion of this standard to other formats or for incorrect results or damages resulting from its use.

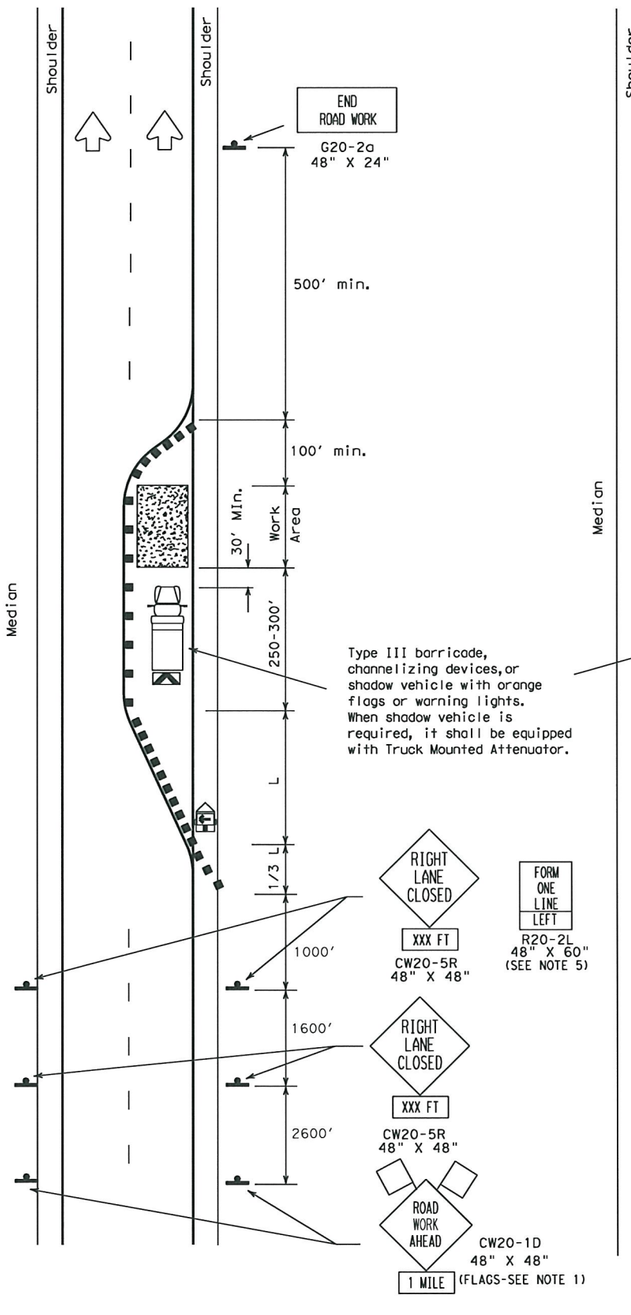

TCP (2-6a)
One Lane Closure

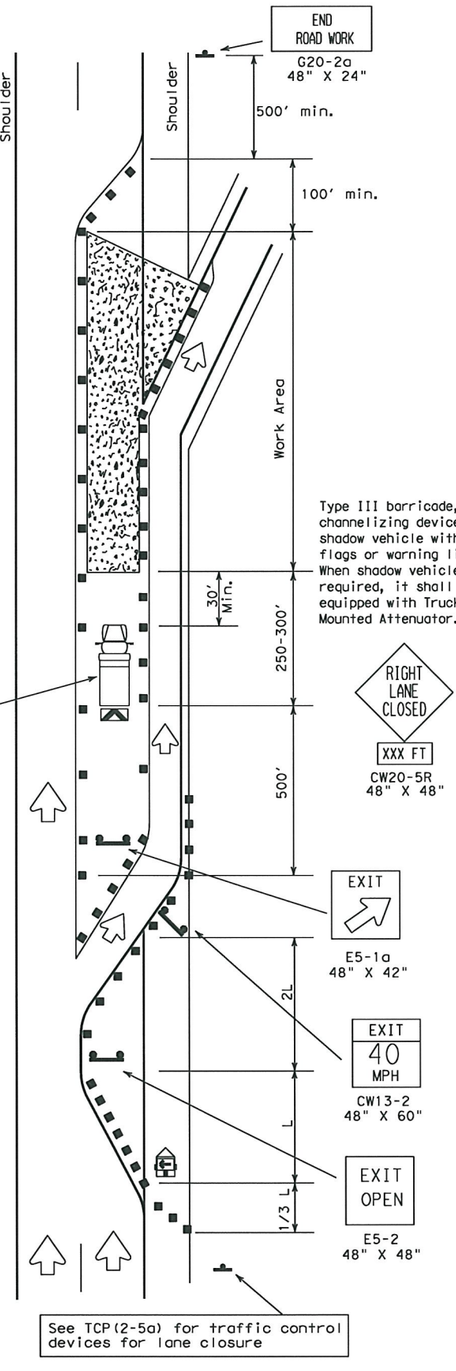

TCP (2-6b)
Lane Closure Near Exit Ramps

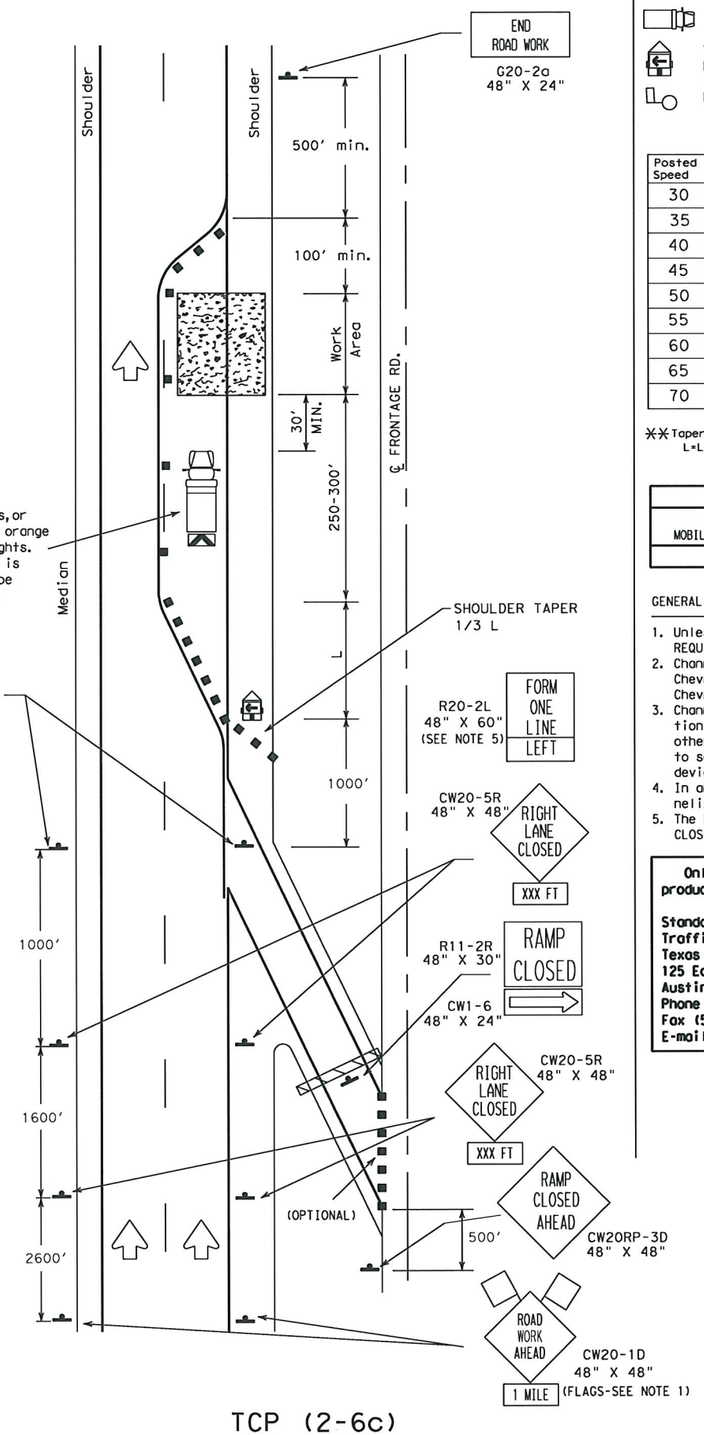

TCP (2-6c)
Lane Closure Near Entrance Ramps

LEGEND

Type III Barricade ■ ■ Channelizing Devices Flag
Heavy Work Vehicle Truck Mounted Attenuator
Trailer Mounted Flashing Arrow Panel (M) Portable Changeable Message Sign
Flagger Sign Post

Posted Speed	Formula	Minimum Desirable Taper Lengths ✳✳ 10' Offset	11' Offset	12' Offset	Suggested Maximum Spacing of Device On a Taper	On a Tangent
30	$L=\frac{WS^2}{60}$	150'	165'	180'	30'	60'-75'
35		205'	225'	245'	35'	70'-90'
40		265'	295'	320'	40'	80'-100'
45	L=WS	450'	495'	540'	45'	90'-110'
50		500'	550'	600'	50'	100'-125'
55		550'	605'	660'	55'	110'-140'
60		600'	660'	720'	60'	120'-150'
65		650'	715'	780'	65'	130'-165'
70		700'	770'	840'	70'	140'-175'

✳✳Taper lengths have been rounded off.
L=Length of Taper (FT.) W=Width of Offset (FT.) S=Posted Speed (MPH)

TYPICAL USAGE: MOBILE	SHORT DURATION	SHORT TERM STATIONARY	INTERMEDIATE TERM STATIONARY	LONG TERM STATIONARY
			✓	✓

GENERAL NOTES:

1. Unless otherwise stated in the plans, flags attached to signs are REQUIRED.
2. Channelizing devices used to close lanes may be supplemented with the Chevron Alignment Sign placed on every other channelizing device. Chevrons may be attached to plastic drums as per BC Standards.
3. Channelizing devices used along the work area or along tangent sections may be supplemented with vertical panels (VP) placed on every other channelizing device. If night time conditions make it difficult to see at least two VP's, the VP's may be placed on each channelizing device.
4. In areas with safety lighting or continuous illumination the channelizing devices can be supplemented with delineators.
5. The FORM ONE LINE LEFT sign may be used following the RIGHT LANE CLOSED sign.

Only pre-qualified products shall be used. A list of compliant products and their sources may be obtained by writing or faxing:

Standards Engineer
Traffic Operations Division - TE
Texas Department of Transportation
125 East 11th Street
Austin, Texas 78701-2483
Phone (512) 416-3335
Fax (512) 416-3161
E-mail TRF-STANDARD@mailgw.dot.state.tx.us

The requirement for shadow vehicles will be listed in the project GENERAL NOTES, Item 502, Barricades, Signs and Traffic Handling.

Texas Department of Transportation
Traffic Operations Division

TRAFFIC CONTROL PLAN

TCP(2-6)-98

©TxDOT December 1985

DN: TXDOT	CK: TXDOT	DW: TXDOT	CK: TXDOT

REVISIONS	CONT	SECT	JOB	HIGHWAY
2-94	0091	03	021	SH289
8-95	DIST	COUNTY		SHEET NO.
1-97	18			91
4-98				

DATE:
FILE:

P 201107 01

DISCLAIMER:
The use of this standard is governed by the "Texas Engineering Practice Act". No warranty of any kind is made by TxDOT for any purpose whatsoever. TxDOT assumes no responsibility for the conversion of this standard to other formats or for incorrect results or damages resulting from its use.

DATE:
FILE:

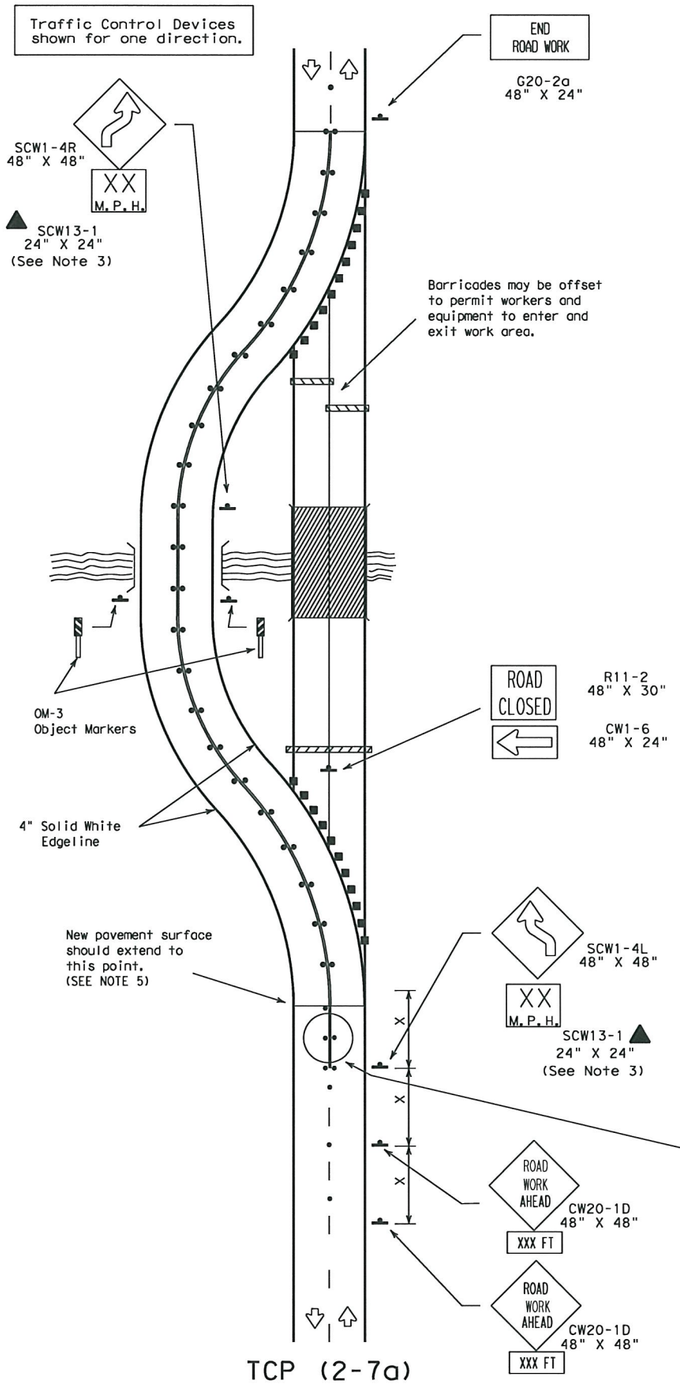

TCP (2-7a)

Roadway Diversion

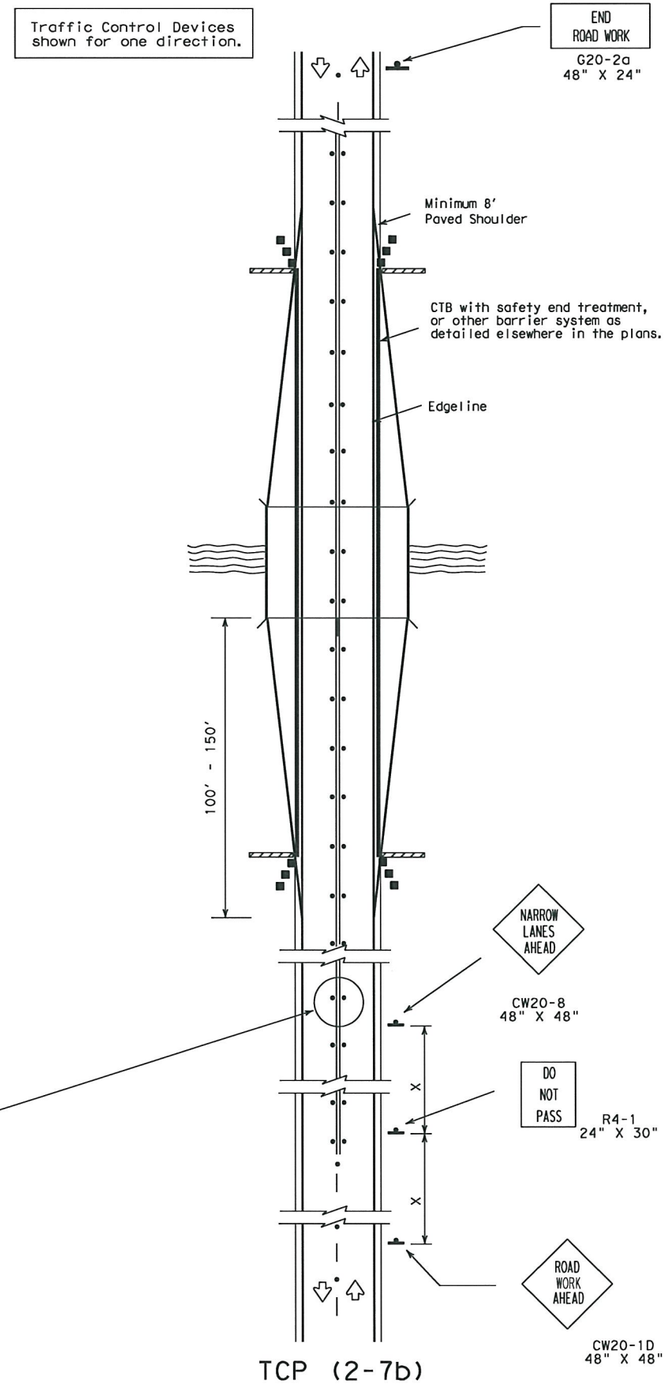

TCP (2-7b)

Bridge Widening

LEGEND

Type III Barricade ■ ■ Channelizing Devices Flag
Heavy Work Vehicle Truck Mounted Attenuator
Trailer Mounted Flashing Arrow Panel (M) Portable Changeable Message Sign
Flagger Sign Post
• • • Raised Pavement Markers Type III-A-A (40' spacing)

Posted Speed ✳	Formula	Minimum Desirable Taper Lengths ✳✳ 10' Offset	11' Offset	12' Offset	Suggested Maximum Spacing of Device On a Taper	On a Tangent	Minimum Sign Spacing X Distance
30	$L=\frac{WS^2}{60}$	150'	165'	180'	30'	60'-75'	120'
35		205'	225'	245'	35'	70'-90'	160'
40		265'	295'	320'	40'	80'-100'	240'
45	L=WS	450'	495'	540'	45'	90'-110'	320'
50		500'	550'	600'	50'	100'-125'	400'
55		550'	605'	660'	55'	110'-140'	500'
60		600'	660'	720'	60'	120'-150'	✳600'
65		650'	715'	780'	65'	130'-165'	✳700'
70		700'	770'	840'	70'	140'-175'	✳800'

✳ Conventional Roads Only

✳✳ Taper lengths have been rounded off.
L=Length of Taper (FT.) W=Width of Offset (FT.) S=Posted Speed (MPH)

TYPICAL USAGE:				
MOBILE	SHORT DURATION	SHORT TERM STATIONARY	INTERMEDIATE TERM STATIONARY	LONG TERM STATIONARY
			✓	✓

GENERAL NOTES:

1. Unless otherwise stated in the plans, flags attached to signs are REQUIRED.
2. Raised pavement markers shall be placed 40' c-c on centerline throughout project.

TCP (2-7a)

3. All traffic control devices illustrated are REQUIRED, except those with the triangle symbol may be omitted when stated elsewhere in the plans.
4. Roadway diversion design requirement should be based on posted speed limit or prevailing speed.
5. New pavement surface should be extended across existing roadway edge to a point where existing pavement markings left in place during project do not conflict with construction area pavement markings.

Texas Department of Transportation
Traffic Operations Division

TRAFFIC CONTROL PLAN

TCP(2-7)-03

© TxDOT December 1985

REVISIONS	DN: TXDOT	CK: TXDOT	DW: TXDOT	CK: TXDOT
8-95	CONT	SECT	JOB	HIGHWAY
1-97	0091	03	021	SH289
4-98	DIST	COUNTY		SHEET NO.
3-03	18	[illegible]		92

P-201107-01

DISCLAIMER:
The use of this standard is governed by the "Texas Engineering Practice Act". No warranty of any kind is made by TxDOT for any purpose whatsoever. TxDOT assumes no responsibility for the conversion of this standard to other formats or for incorrect results or damages resulting from its use.

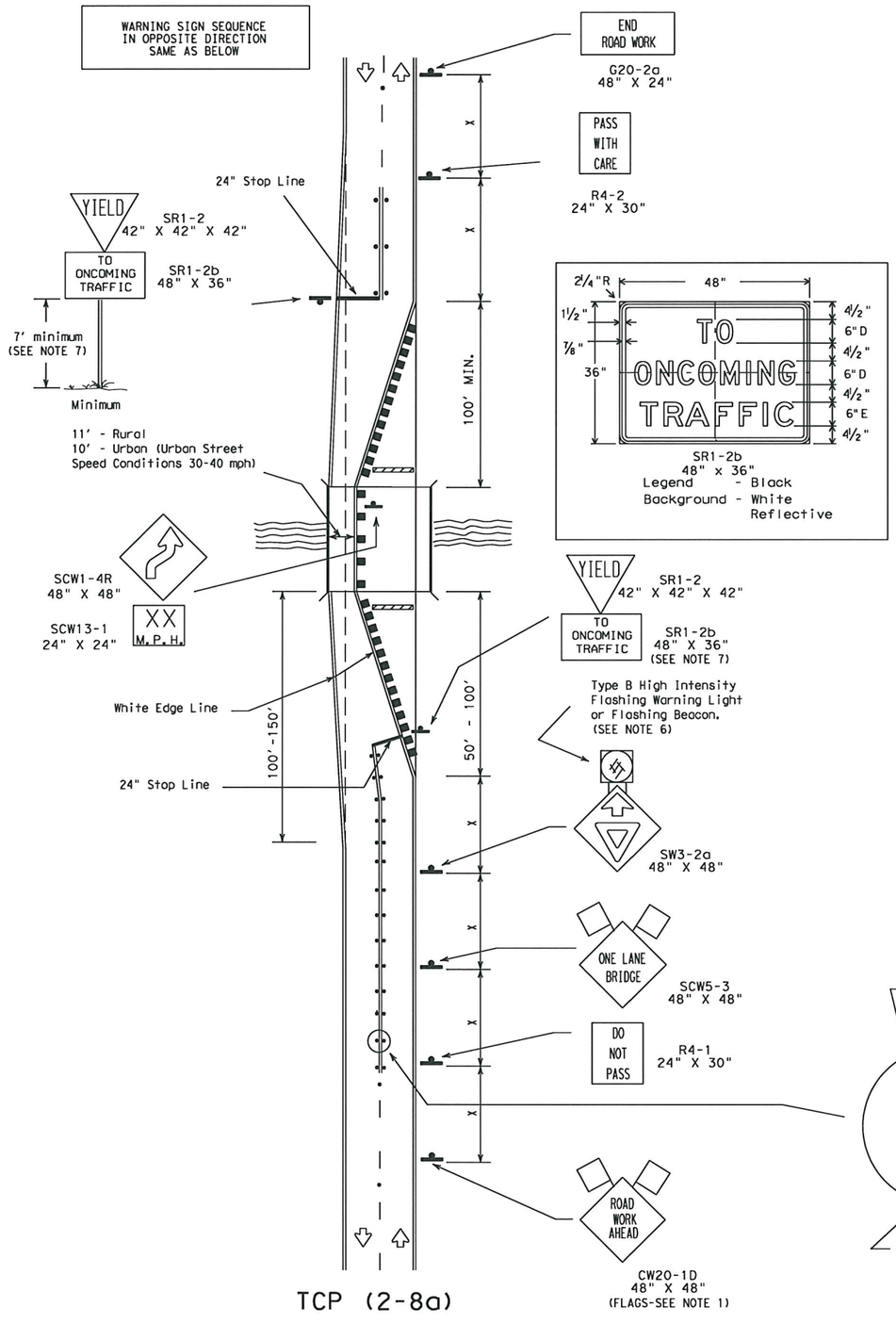

TCP (2-8a)

Two-Way Traffic Control
With Yield Signs

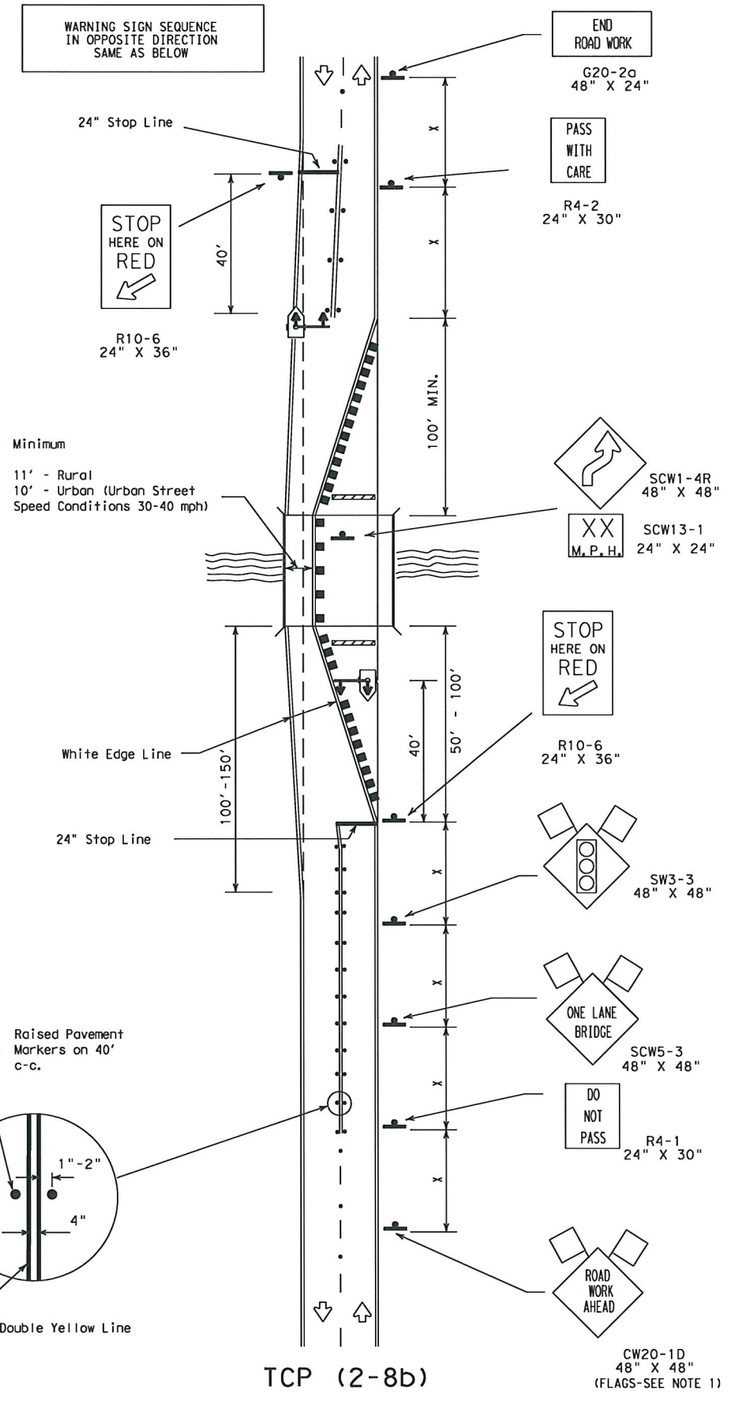

TCP (2-8b)

Two-Way Traffic Control
With Traffic Signal

LEGEND

Type III Barricade ■ ■ Channelizing Devices Flag
Flagger Sign Post Temporary or Portable Traffic Signals
• • • Raised Pavement Markers Type II-A-A (40' spacing)

Posted Speed*	Formula	Minimum Desirable Taper Lengths ** 10' Offset	11' Offset	12' Offset	Suggested Maximum Spacing of Device On a Taper	On a Tangent	Minimum Sign Spacing X Distance
30	$L=\frac{WS^2}{60}$	150'	165'	180'	30'	60'-75'	120'
35		205'	225'	245'	35'	70'-90'	160'
40		265'	295'	320'	40'	80'-100'	240'
45	L=WS	450'	495'	540'	45'	90'-110'	320'
50		500'	550'	600'	50'	100'-125'	400'
55		550'	605'	660'	55'	110'-140'	500'
60		600'	660'	720'	60'	120'-150'	*600'
65		650'	715'	780'	65'	130'-165'	*700'
70		700'	770'	840'	70'	140'-175'	*800'

* Conventional Roads Only

** Taper lengths have been rounded off.
L=Length of Taper (FT.) W=Width of Offset (FT.) S=Posted Speed (MPH)

TYPICAL USAGE: MOBILE	SHORT DURATION	SHORT TERM STATIONARY	INTERMEDIATE TERM STATIONARY	LONG TERM STATIONARY
			✓	✓

GENERAL NOTES:

1. Unless otherwise stated in the plans, flags attached to signs are REQUIRED.
2. Advance Warning signing shown for one direction.
3. Raised reflective pavement markers shall be placed 40' c-c on centerline between ROAD WORK AHEAD signs and stop lines.
4. For intermediate term situations, when it is not feasible to remove and restore pavement markings, the channelization must be made dominant by using a very close spacing. This is especially important in locations of conflicting information, such as where traffic is directed over a double yellow centerline. In such locations a maximum channelizing device spacing of 10 feet is recommended. The 10 foot channelizing device spacing recommendation is intended for the area of conflicting information and not the entire work zone.

TCP (2-8a)

5. Traffic control by YIELD AHEAD symbol signs for one lane two-way traffic control operations should be limited to structures less than 400' long and roadways with less than 4000 ADT. Portable traffic signals should be used on other roadways.
6. If power is available, a flashing beacon should be attached to the YIELD AHEAD symbol sign for emphasis.
7. YIELD and TO ONCOMING TRAFFIC signs and other regulatory signs shall be installed at 7' minimum mounting height.

TCP (2-8b)

8. A list of approved Portable Traffic Signals can be found on compliant products list.

Texas Department of Transportation
Traffic Operations Division

TRAFFIC CONTROL PLAN

TCP(2-8)-03

©TxDOT December 1985	DN: TXDOT	CK: TXDOT	DW: TXDOT	CK: TXDOT
REVISIONS 8-95 1-97 4-98 3-03	CONT	SECT	JOB	HIGHWAY
	0091	03	021	SH289
	DIST	COUNTY		SHEET NO.
	18	ELLIS		93

DATE:
FILE:

P-201107-01

DISCLAIMER:
The use of this standard is governed by the "Texas Engineering Practice Act". No warranty of any kind is made by TxDOT for any purpose whatsoever. TxDOT assumes no responsibility for the conversion of this standard to other formats or for incorrect results or damages resulting from its use.

A shadow vehicle equipped with a Truck Mounted Attenuator is typically required. A shadow vehicle equipped with a TMA shall be used if it can be positioned approximately 100 ft. or less in advance of the area of crew exposure without adversely effecting the work performance.

Shadow vehicles are required unless otherwise noted in the GENERAL NOTES, Item 502, Barricades, Signs and Traffic Handling.

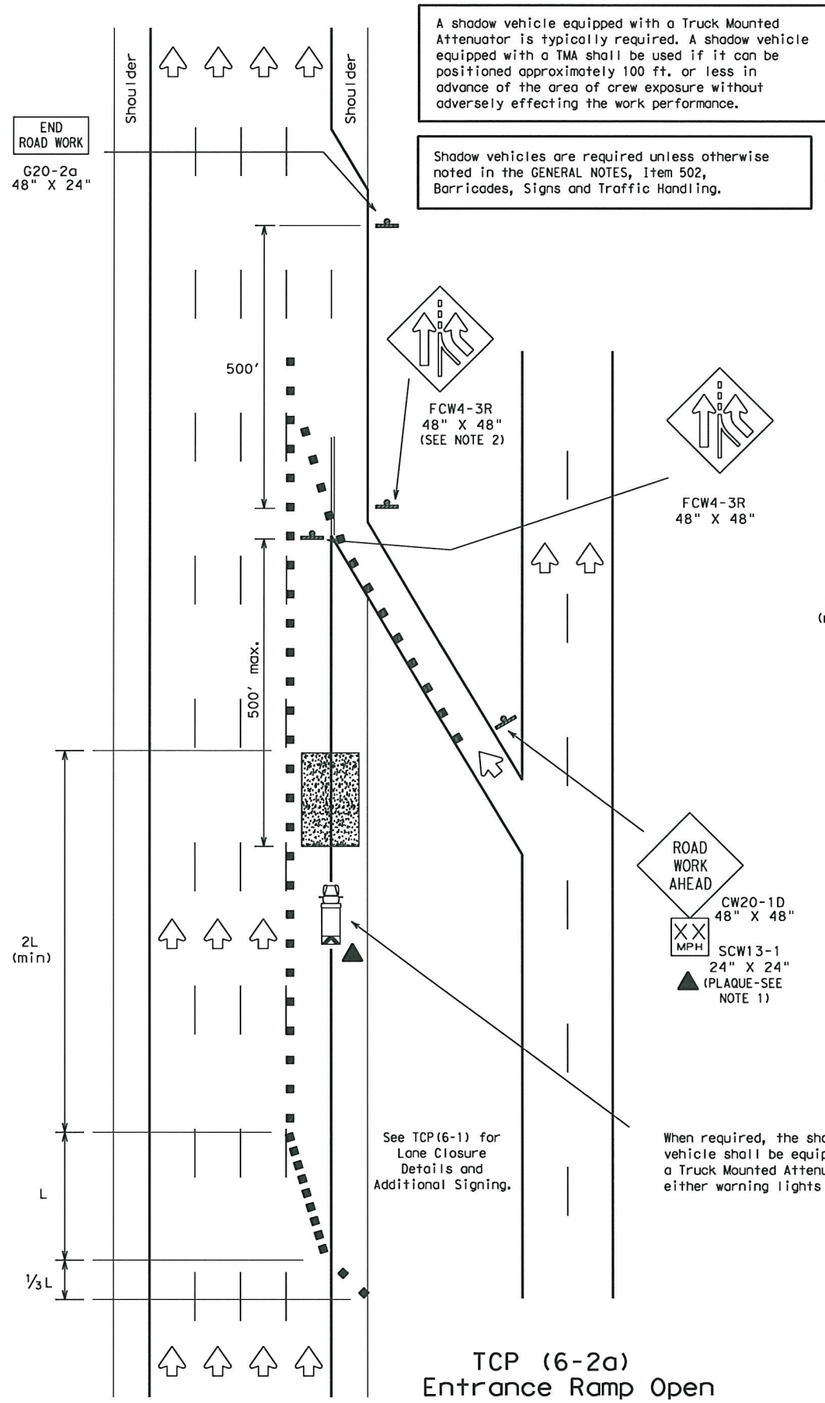

TCP (6-2a)
Entrance Ramp Open
Work Within 500' of Ramp

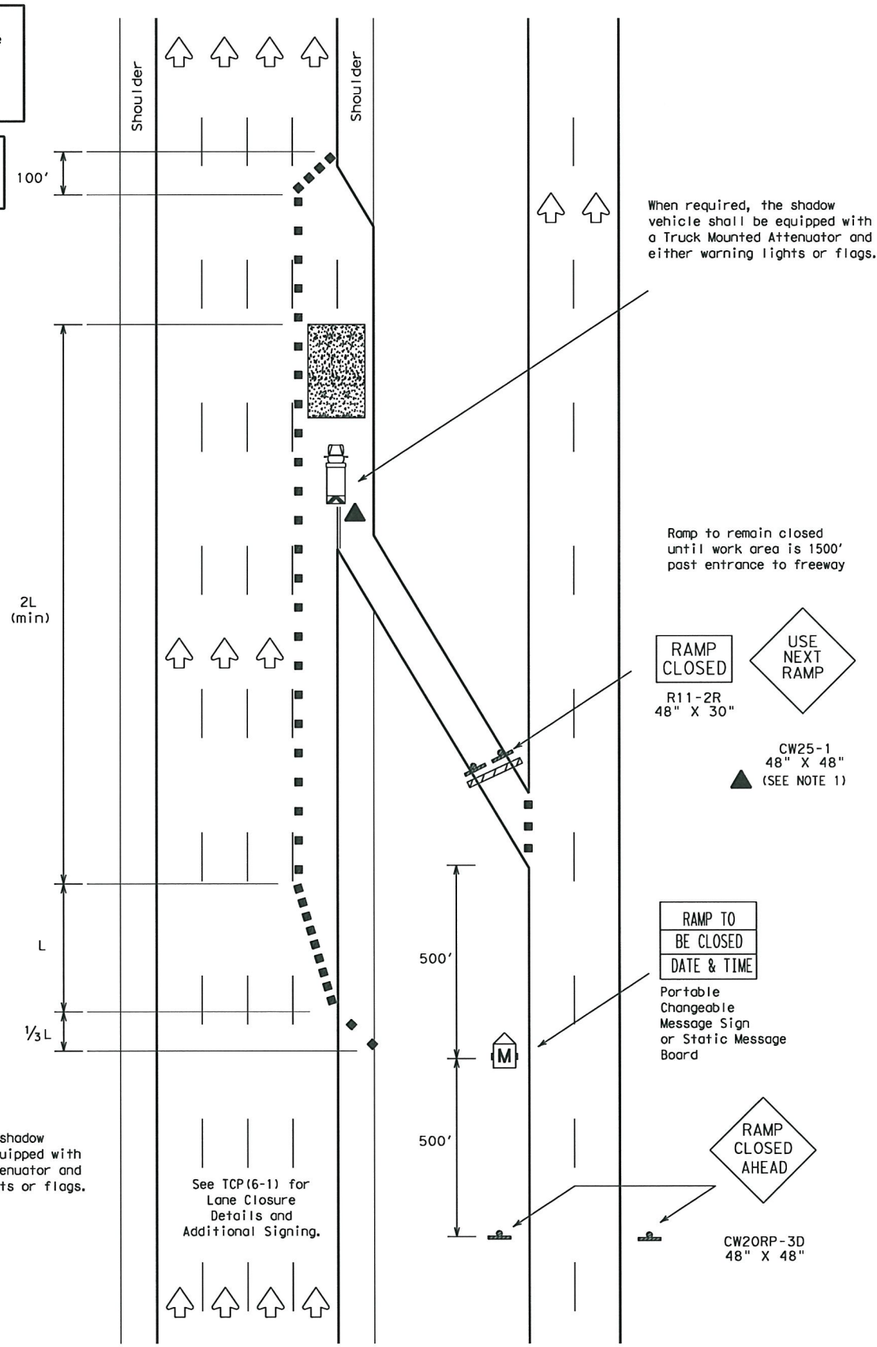

TCP (6-2b)
Entrance Ramp Closed

LEGEND

Type III Barricade ■ ■ Channelizing Devices Flag
Heavy Work Vehicle Truck Mounted Attenuator
Trailer Mounted Flashing Arrow Panel
Portable Changeable Message Sign
Flagger Sign Post

Posted Speed	Formula	Minimum Desirable Taper Lengths ✳✳ 10' Offset	11' Offset	12' Offset	Suggested Maximum Spacing of Device On a Taper	On a Tangent
30	$L=\frac{WS^2}{60}$	150'	165'	180'	30'	60'-75'
35		205'	225'	245'	35'	70'-90'
40		265'	295'	320'	40'	80'-100'
45	L=WS	450'	495'	540'	45'	90'-110'
50		500'	550'	600'	50'	100'-125'
55		550'	605'	660'	55'	110'-140'
60		600'	660'	720'	60'	120'-150'
65		650'	715'	780'	65'	130'-165'
70		700'	770'	840'	70'	140'-175'

✳✳Taper lengths have been rounded off.
L=Length of Taper (FT.) W=Width of Offset (FT.) S=Posted Speed (MPH)

TYPICAL USAGE:				
MOBILE	SHORT DURATION	SHORT TERM STATIONARY	INTERMEDIATE TERM STATIONARY	LONG TERM STATIONARY
	✓	✓		

GENERAL NOTES:

1. All traffic control devices illustrated are REQUIRED, except those denoted with the triangle symbol may be omitted when stated elsewhere in the plans.
2. ADDED LANE Symbol (FCW4-3R) sign may be omitted when sign between ramp and mainlane can be seen from both roadways.

Only pre-qualified products shall be used. A list of compliant products and their sources may be obtained by writing or faxing:

Standards Engineer
Traffic Operations Division - TE
Texas Department of Transportation
125 East 11th Street
Austin, Texas 78701-2483
Phone (512) 416-3335
Fax (512) 416-3161
E-mail TRF-STANDARD@mailgw.dot.state.tx.us

ADDITIONAL REQUIREMENTS FOR LANE CLOSURES AND ADVANCE SIGNING SHALL BE AS SHOWN ON TCP (6-1) OR AS DIRECTED BY THE ENGINEER.

Texas Department of Transportation
Traffic Operations Division

TRAFFIC CONTROL PLAN
WORK AREA NEAR RAMP

TCP(6-2)-98A

©TxDOT Feburary 1994

DN: TXDOT	CK: TXDOT	DW: TXDOT	CK: TXDOT

REVISIONS
1-97
4-98
8-98

CONT	SECT	JOB	HIGHWAY
0091	03	021	SH289
DIST	COUNTY		SHEET NO.
18	COLLIN		94

DATE:
FILE:

P 201107 01

DISCLAIMER:
The use of this standard is governed by the "Texas Engineering Practice Act". No warranty of any kind is made by TxDOT for any purpose whatsoever. TxDOT assumes no responsibility for the conversion of this standard to other formats or for incorrect results or damages resulting from its use.

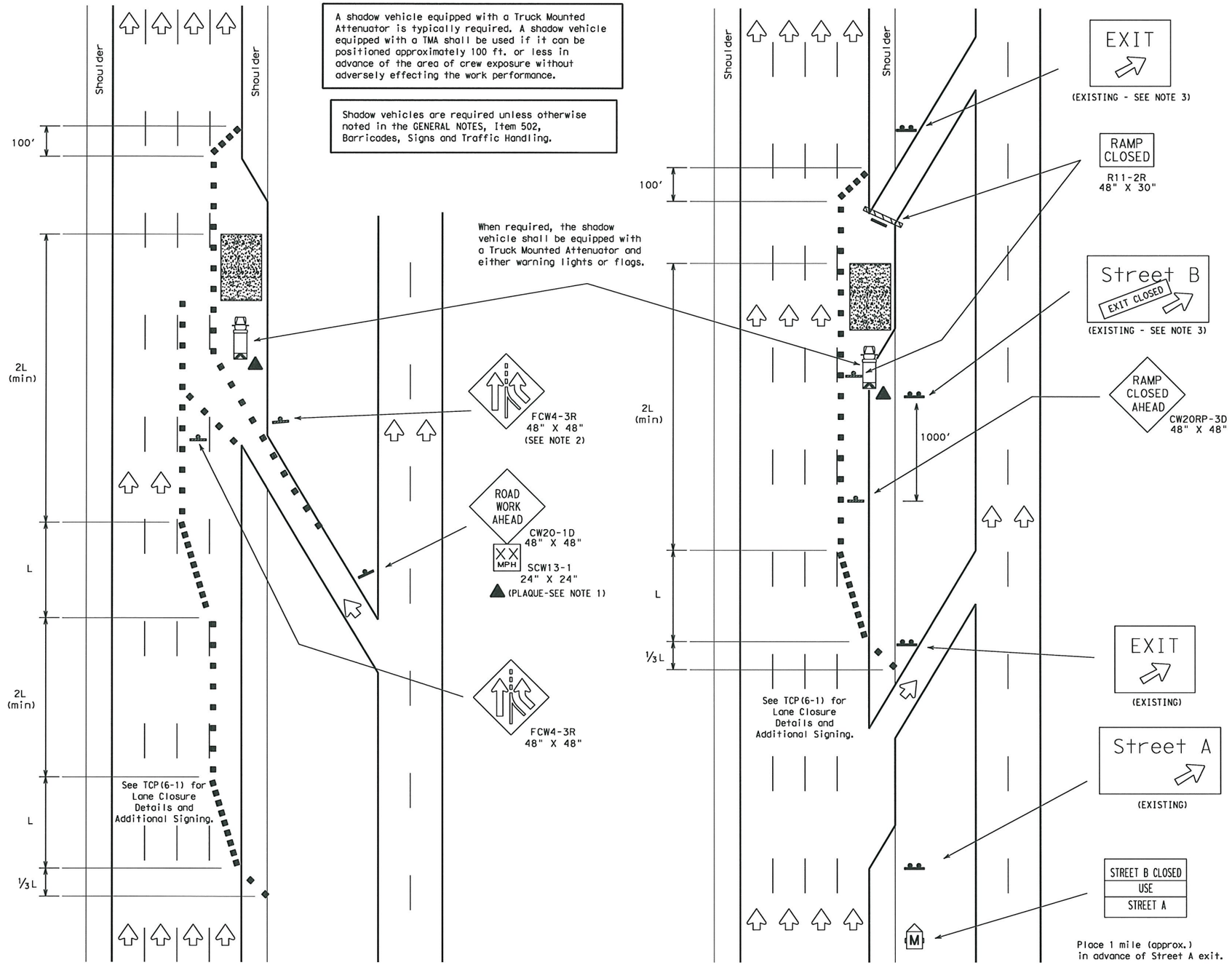

TCP (6-3a)
Entrance Ramp Open

TCP (6-3b)
Exit Ramp Closed
Traffic Exits Prior to Closed Ramp

LEGEND

Type III Barricade ■ ■ Channelizing Devices Flag
Heavy Work Vehicle Truck Mounted Attenuator
Trailer Mounted Flashing Arrow Panel
Portable Changeable Message Sign
Flagger Sign Post

Posted Speed	Formula	Minimum Desirable Taper Lengths ** 10' Offset	11' Offset	12' Offset	Suggested Maximum Spacing of Device On a Taper	On a Tangent
30	$L=\frac{WS^2}{60}$	150'	165'	180'	30'	60'-75'
35		205'	225'	245'	35'	70'-90'
40		265'	295'	320'	40'	80'-100'
45	L=WS	450'	495'	540'	45'	90'-110'
50		500'	550'	600'	50'	100'-125'
55		550'	605'	660'	55'	110'-140'
60		600'	660'	720'	60'	120'-150'
65		650'	715'	780'	65'	130'-165'
70		700'	770'	840'	70'	140'-175'

** Taper lengths have been rounded off.
L=Length of Taper (FT.) W=Width of Offset (FT.) S=Posted Speed (MPH)

TYPICAL USAGE:				
MOBILE	SHORT DURATION	SHORT TERM STATIONARY	INTERMEDIATE TERM STATIONARY	LONG TERM STATIONARY
	✓	✓		

GENERAL NOTES:

1. All traffic control devices illustrated are REQUIRED, except those denoted with the triangle symbol may be omitted when stated elsewhere in the plans.
2. ADDED LANE (FCW4-3R) sign may be omitted when sign between ramp and mainlane can be seen from both roadways.
3. Existing exit gore, exit direction, and advance guide signs not in use should be covered, removed or EXIT CLOSED (CW26-1T) sign attached. See BC Standards for sign details.

Only pre-qualified products shall be used. A list of compliant products and their sources may be obtained by writing or faxing:

Standards Engineer
Traffic Operations Division - TE
Texas Department of Transportation
125 East 11th Street
Austin, Texas 78701-2483
Phone (512) 416-3335
Fax (512) 416-3161
E-mail TRF-STANDARD@mailgw.dot.state.tx.us

ADDITIONAL REQUIREMENTS FOR LANE CLOSURES AND ADVANCE SIGNING SHALL BE AS SHOWN ON TCP (6-1) OR AS DIRECTED BY THE ENGINEER.

Texas Department of Transportation
Traffic Operations Division

TRAFFIC CONTROL PLAN

TCP(6-3)-98A

©TxDOT Feburary 1994

DN: TXDOT	CK: TXDOT	DW: TXDOT	CK: TXDOT

REVISIONS
1-97
4-98
8-98

CONT	SECT	JOB	HIGHWAY
0091	03	021	SH289
DIST	COUNTY		SHEET NO.
18	[illegible]		95

DATE:
FILE:

P 201107 01

DISCLAIMER:
The use of this standard is governed by the "Texas Engineering Practice Act". No warranty of any kind is made by TxDOT for any purpose whatsoever. TxDOT assumes no responsibility for the conversion of this standard to other formats or for incorrect results or damages resulting from its use.

DATE:
FILE:

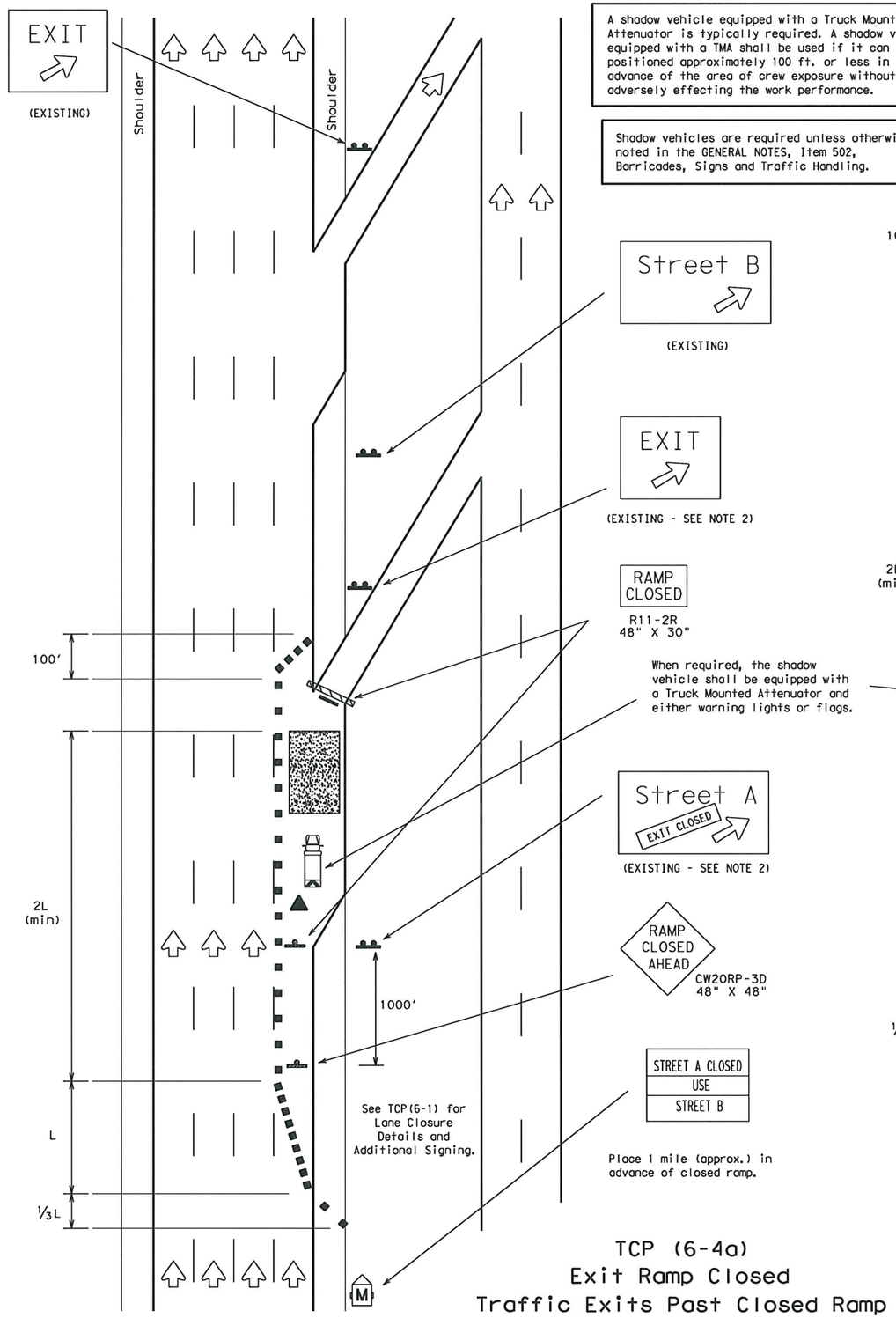

TCP (6-4a)
Exit Ramp Closed
Traffic Exits Past Closed Ramp

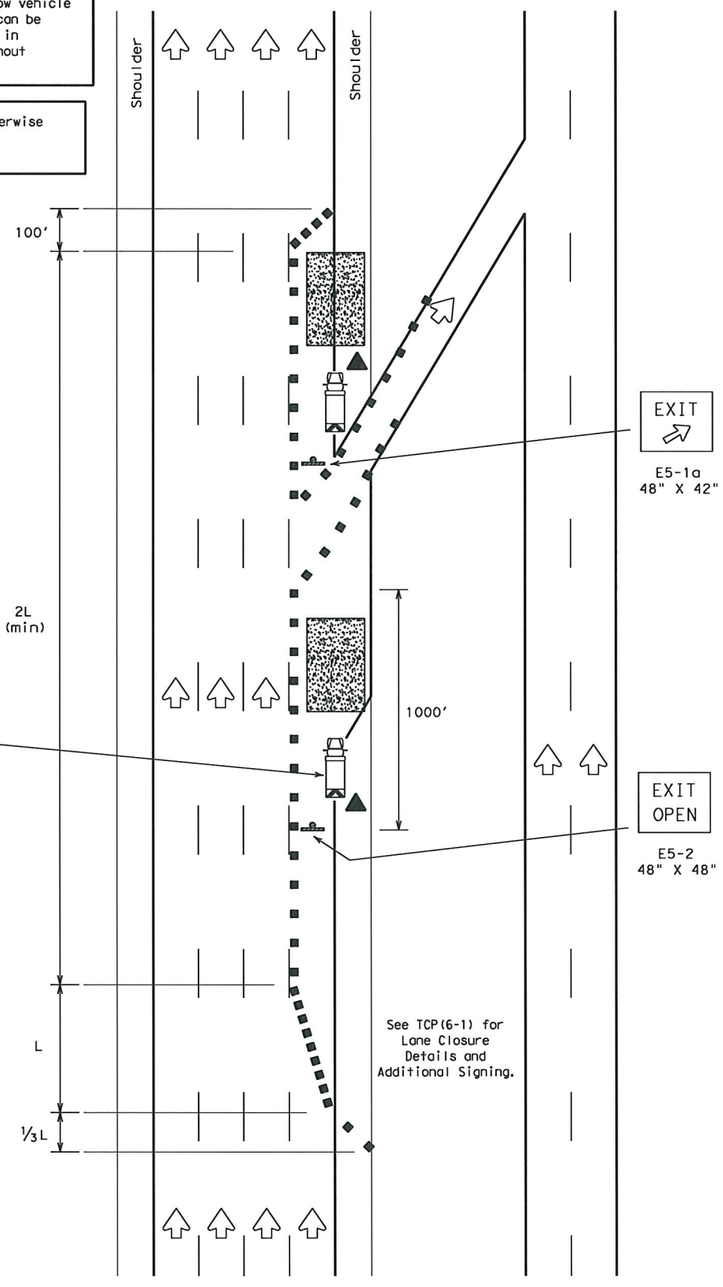

TCP (6-4b)
Exit Ramp Open

LEGEND

Type III Barricade ■ ■ Channelizing Devices Flag
Heavy Work Vehicle Truck Mounted Attenuator
Trailer Mounted Flashing Arrow Panel (M) Portable Changeable Message Sign
Flagger Sign Post

Posted Speed	Formula	Minimum Desirable Taper Lengths ** 10' Offset	11' Offset	12' Offset	Suggested Maximum Spacing of Device On a Taper	On a Tangent
30	$L=\frac{WS^2}{60}$	150'	165'	180'	30'	60'-75'
35		205'	225'	245'	35'	70'-90'
40		265'	295'	320'	40'	80'-100'
45	L=WS	450'	495'	540'	45'	90'-110'
50		500'	550'	600'	50'	100'-125'
55		550'	605'	660'	55'	110'-140'
60		600'	660'	720'	60'	120'-150'
65		650'	715'	780'	65'	130'-165'
70		700'	770'	840'	70'	140'-175'

** Taper lengths have been rounded off.
L=Length of Taper (FT.) W=Width of Offset (FT.) S=Posted Speed (MPH)

TYPICAL USAGE:				
MOBILE	SHORT DURATION	SHORT TERM STATIONARY	INTERMEDIATE TERM STATIONARY	LONG TERM STATIONARY
	✓	✓		

GENERAL NOTES:

1. All traffic control devices illustrated are REQUIRED, except those denoted with the triangle symbol may be omitted when stated elsewhere in the plans.
2. Existing exit gore, exit direction, and advance guide signs not in use should be covered, removed or EXIT CLOSED (CW26-1T) sign attached.
3. See BC Standards for sign details.

Only pre-qualified products shall be used. A list of compliant products and their sources may be obtained by writing or faxing:

Standards Engineer
Traffic Operations Division - TE
Texas Department of Transportation
125 East 11th Street
Austin, Texas 78701-2483
Phone (512) 416-3335
Fax (512) 416-3161
E-mail TRF-STANDARD@mailgw.dot.state.tx.us

ADDITIONAL REQUIREMENTS FOR LANE CLOSURES AND ADVANCE SIGNING SHALL BE AS SHOWN ON TCP (6-1) OR AS DIRECTED BY THE ENGINEER.

Texas Department of Transportation
Traffic Operations Division

TRAFFIC CONTROL PLAN

TCP(6-4)-98A

©TxDOT Feburary 1994

REVISIONS	DN: TXDOT	CK: TXDOT	DW: TXDOT	CK: TXDOT
1-97	CONT	SECT	JOB	HIGHWAY
4-98	0091	03	021	SH289
8-98	DIST	COUNTY		SHEET NO.
	18	ROLL		96

P 201107 01

DISCLAIMER:
The use of this standard is governed by the "Texas Engineering Practice Act". No warranty of any kind is made by TxDOT for any purpose whatsoever. TxDOT assumes no responsibility for the conversion of this standard to other formats or for incorrect results or damages resulting from its use.

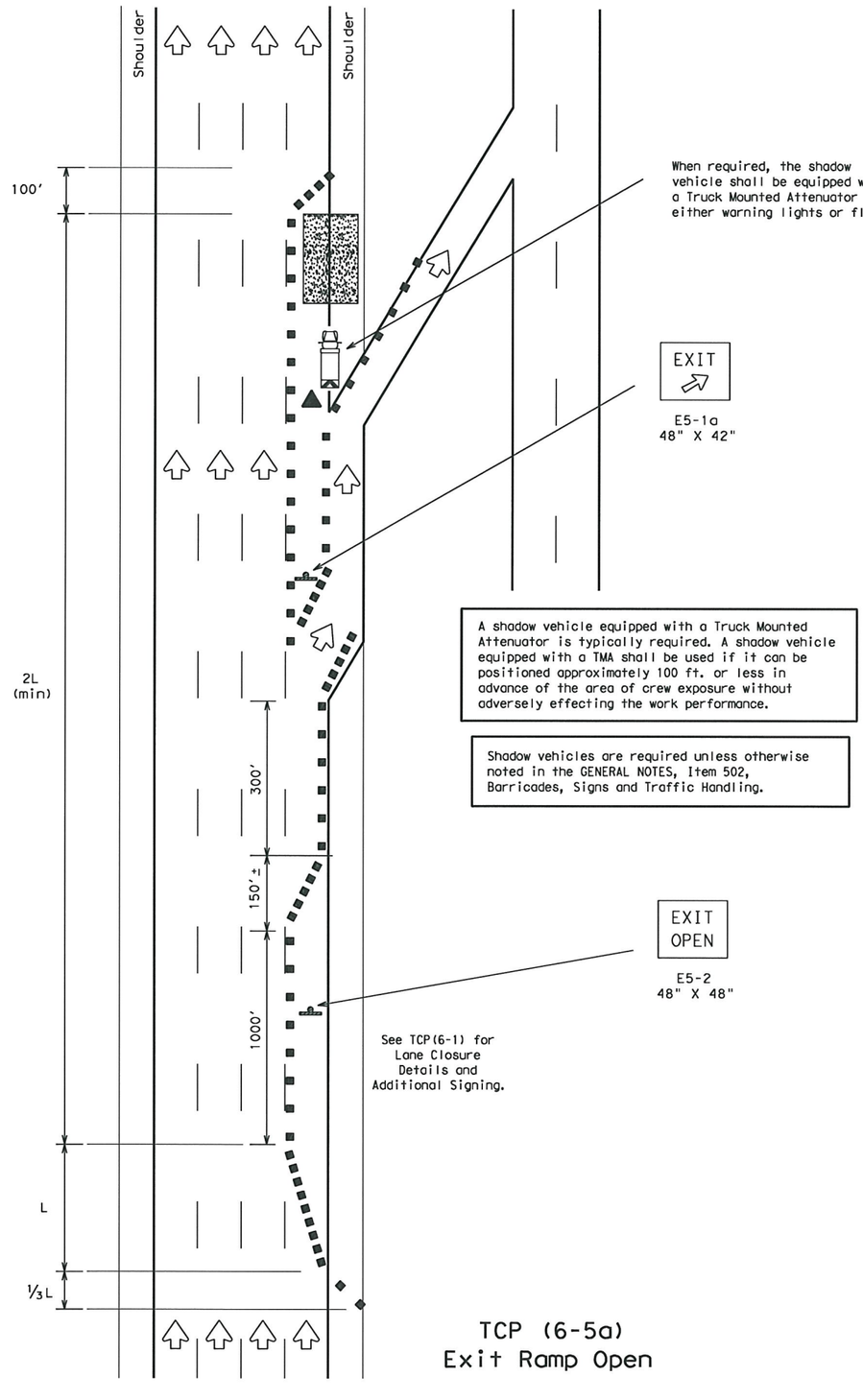

A shadow vehicle equipped with a Truck Mounted Attenuator is typically required. A shadow vehicle equipped with a TMA shall be used if it can be positioned approximately 100 ft. or less in advance of the area of crew exposure without adversely effecting the work performance.

Shadow vehicles are required unless otherwise noted in the GENERAL NOTES, Item 502, Barricades, Signs and Traffic Handling.

TCP (6-5a)
Exit Ramp Open

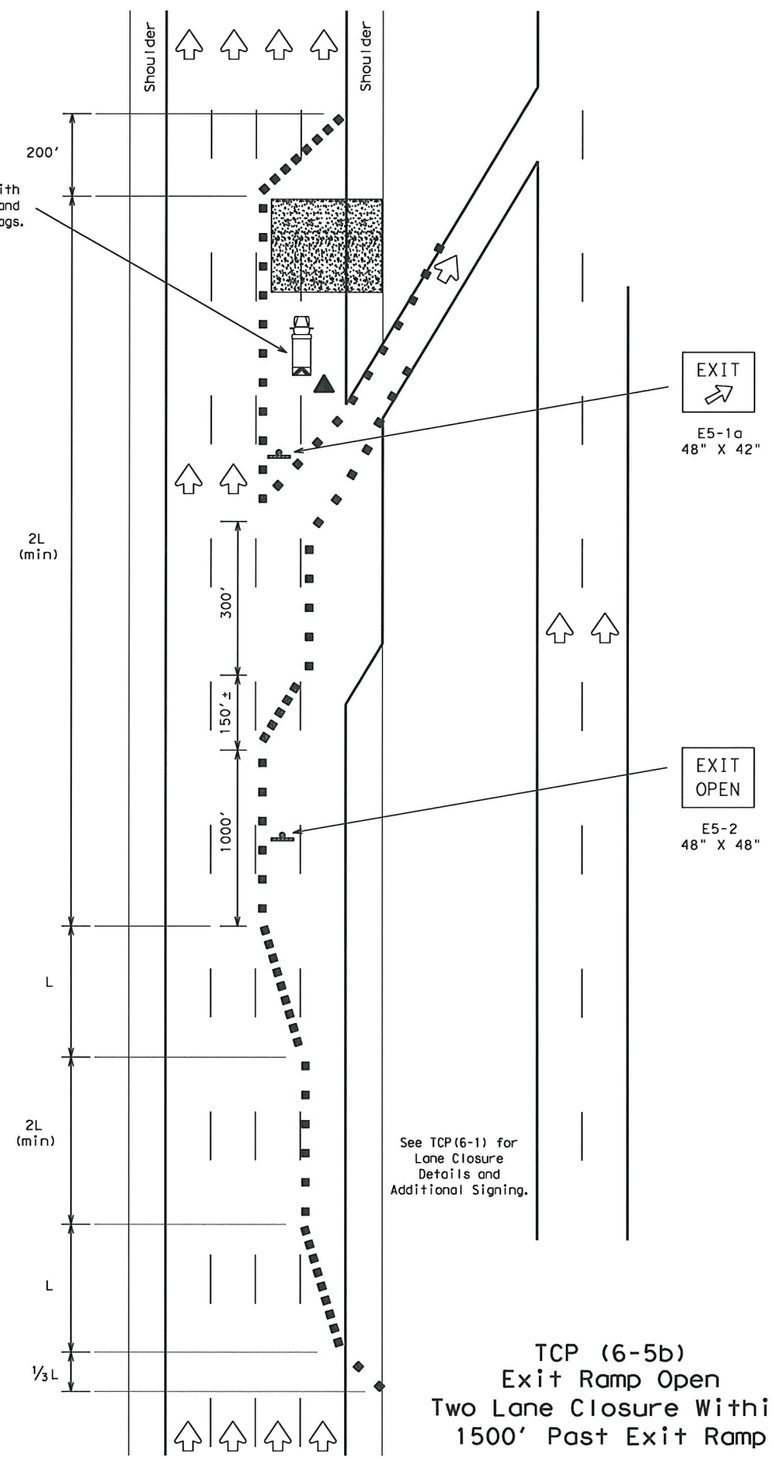

TCP (6-5b)
Exit Ramp Open
Two Lane Closure Within
1500' Past Exit Ramp

LEGEND

Type III Barricade ■ ■ Channelizing Devices Flag
Heavy Work Vehicle Truck Mounted Attenuator
Trailer Mounted Flashing Arrow Panel (M) Portable Changeable Message Sign
Flagger Sign Post

Posted Speed	Formula	Minimum Desirable Taper Lengths ✳✳ 10' Offset	11' Offset	12' Offset	Suggested Maximum Spacing of Device On a Taper	On a Tangent
30	$L=\frac{WS^2}{60}$	150'	165'	180'	30'	60'-75'
35		205'	225'	245'	35'	70'-90'
40		265'	295'	320'	40'	80'-100'
45	L=WS	450'	495'	540'	45'	90'-110'
50		500'	550'	600'	50'	100'-125'
55		550'	605'	660'	55'	110'-140'
60		600'	660'	720'	60'	120'-150'
65		650'	715'	780'	65'	130'-165'
70		700'	770'	840'	70'	140'-175'

✳✳Taper lengths have been rounded off.
L=Length of Taper (FT.) W=Width of Offset (FT.) S=Posted Speed (MPH)

TYPICAL USAGE:				
MOBILE	SHORT DURATION	SHORT TERM STATIONARY	INTERMEDIATE TERM STATIONARY	LONG TERM STATIONARY
	✓	✓		

GENERAL NOTES

1. All traffic control devices illustrated are REQUIRED, except those denoted with the triangle symbol may be omitted when stated elsewhere in the plans.
2. See BC standards for sign details.

Only pre-qualified products shall be used. A list of compliant products and their sources may be obtained by writing or faxing:

Standards Engineer
Traffic Operations Division - TE
Texas Department of Transportation
125 East 11th Street
Austin, Texas 78701-2483
Phone (512) 416-3335
Fax (512) 416-3161
E-mail TRF-STANDARD@mailgw.dot.state.tx.us

ADDITIONAL REQUIREMENTS FOR LANE CLOSURES AND ADVANCE SIGNING SHALL BE AS SHOWN ON TCP (6-1) OR AS DIRECTED BY THE ENGINEER.

Texas Department of Transportation
Traffic Operations Division

TRAFFIC CONTROL PLAN

TCP(6-5)-98A

© TxDOT Feburary 1994

REVISIONS	DN: TXDOT	CK: TXDOT	DW: TXDOT	CK: TXDOT
1-97	CONT	SECT	JOB	HIGHWAY
4-98	0091	03	021	SH289
8-98	DIST	COUNTY		SHEET NO.
	18	ELLIS		97

DATE:
FILE:

P-201107-01

DISCLAIMER:
The use of this standard is governed by the "Texas Engineering Practice Act". No warranty of any kind is made for any purpose whatsoever. TxDOT assumes no responsibility for the conversion of this standard to other formats or for incorrect results or damages resulting from its use.

CHANNELIZING DEVICES FOR URBAN ROADWAY TYPE PROJECT

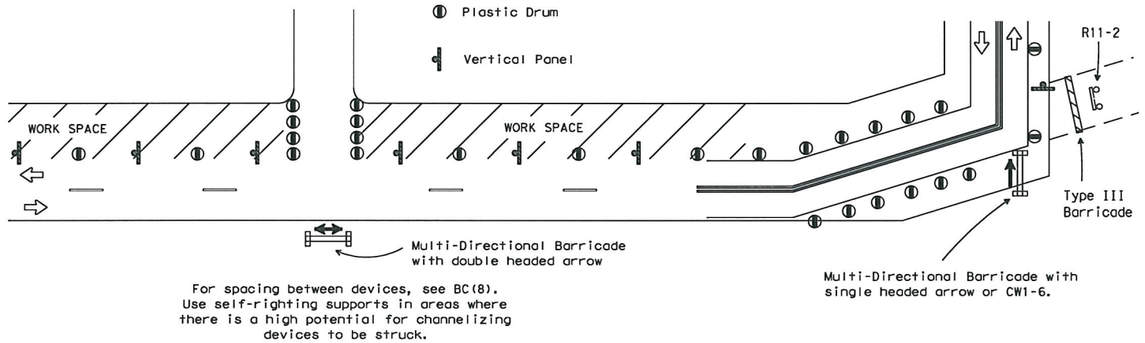

For spacing between devices, see BC(8).
Use self-righting supports in areas where there is a high potential for channelizing devices to be struck.

MULTI-DIRECTIONAL BARRICADE

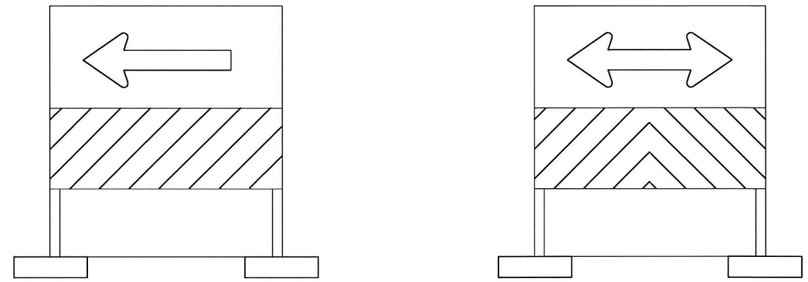

Single Headed Arrow

Double Headed Arrow

1. Multi-directional barricade shall not be used for lane closures.
2. May be used for sharp changes in alignment, or across roadway from stem of "T" intersection.
3. Typically used for Intermediate Term Stationary, Short Term Stationary or Short Duration work zone operations.
4. See the CWZTCD List for approved designs.

BARRIER DELINEATION WITH SAFETY GLARE FENCE

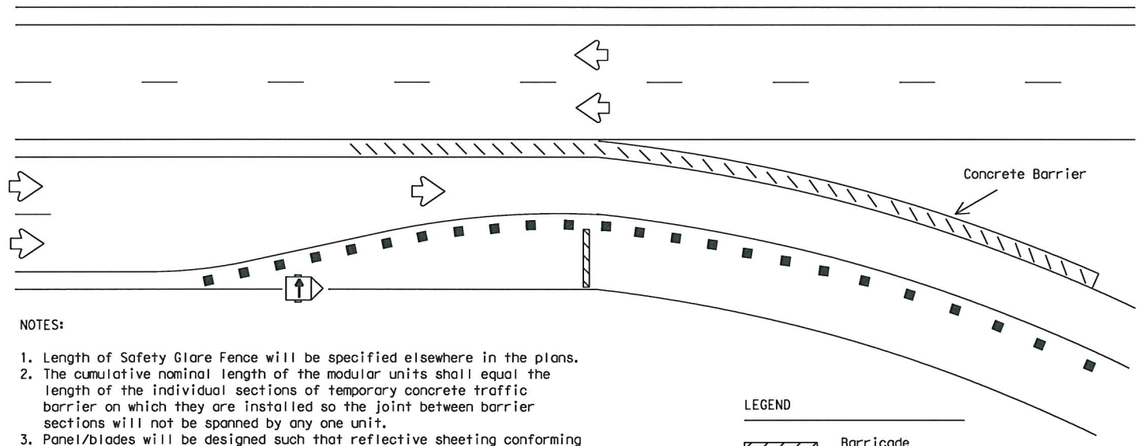

NOTES:

1. Length of Safety Glare Fence will be specified elsewhere in the plans.
2. The cumulative nominal length of the modular units shall equal the length of the individual sections of temporary concrete traffic barrier on which they are installed so the joint between barrier sections will not be spanned by any one unit.
3. Panel/blades will be designed such that reflective sheeting conforming with Departmental Material Specification DMS-8300, Flat Surface Reflective Sheeting, Type C (High Specific Intensity), minimum size of 2 inches by 12 inches can be attached to the edge of the panel/blade. The sheeting shall be attached to one panel/blade per section of concrete barrier not to exceed a spacing of 30 feet. Barrier reflectors are not necessary when panel/blades are installed.
4. Moduler Glare Screens for head light barrier shall meet the requirements of DMS-8610.

LEGEND

- Barricade
- Channelizing devices
- Trailer mounted flashing arrow panel
- Safety glare fence

USAGE OF CW1-6, ECW1-6a AND CW1-8 SIGNS

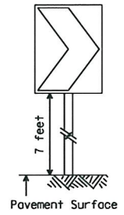

CW1-8

The CHEVRON sign (CW1-8) may be used to replace roadside delineation on curves or used in transitions or tapers.

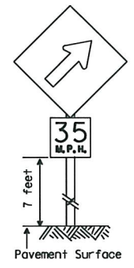

ECW1-6a

An UPWARD SLOPING ARROW sign (ECW1-6a) is intended to be used to indicate the beginning of a curve or transition. It should be preceded with an appropriate curve sign when needed, and should not be used throughout the curve or transition. Advisory speed plaque is optional.

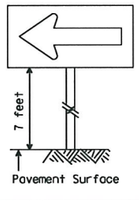

CW1-6

A LARGE ARROW sign (CW1-6) is intended to be used to give notice of a sharp change in alignment (turn) in the direction of travel. It should be preceded with an appropriate advance construction warning turn sign.

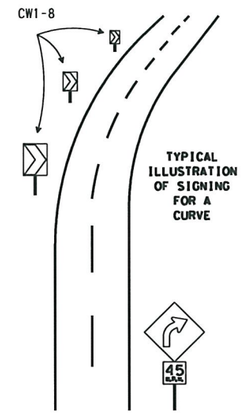

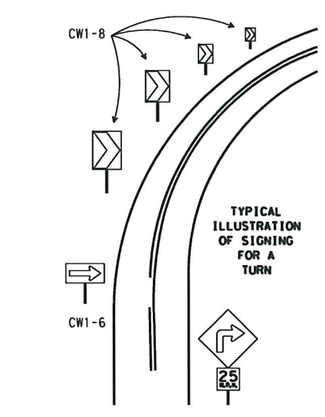

NOTES:

1. CW1-6, ECW1-6a & CW1-8 signs shall be mounted on fixed supports.
2. Chevrons, when used, shall be erected on the outside of a sharp curve or turn, or on the far side of an intersection. They shall be in line with and at right angles to approaching traffic. Spacing should be such that the motorist always has three in view, until the change in alignment eliminates its need.
3. For two-way traffic, use same arrangement of signs on outside of curve for each direction of travel.
4. Appropriate advance warning CURVE or TURN sign with Advisory Speed plaque should be used when needed.

Only pre-qualified products shall be used. A copy of the "Compliant Work Zone Traffic Control Devices List" (CWZTCD) describes pre-qualified products and their sources and may be obtained by contacting:

Standards Engineer
Traffic Operations Division - TE
Texas Department of Transportation
125 East 11th Street
Austin, Texas 78701-2483
Phone (512) 416-3120
Fax (512) 416-3299

Instructions to locate the "CWZTCD" on TxDOT website are:

Start at website - www.dot.state.tx.us
Click on "About TxDOT",
Click on "Organizational Chart",
Click on Traffic Operations Box,
Click on "Compliant Work Zone Traffic Control Devices",
Click on "View PDF".
This site is printable.

PREQUALIFICATION PROCEDURES ARE OBTAINED FROM:

CONSTRUCTION DIVISION-MATERIALS AND TESTS SECTION
TEXAS DEPARTMENT OF TRANSPORTATION (TxDOT)
125 EAST 11th STREET
AUSTIN, TX 78701-2483

DEPARTMENTAL MATERIAL SPECIFICATIONS

FLAT SURFACE REFLECTIVE SHEETING	DMS-8300
DELINEATORS AND OBJECT MARKERS	DMS-8600
MODULER GLARE SCREENS	DMS-8610

COLOR	USAGE	SIGN SHEETING
ORANGE	BACKGROUND	TYPE E (FLUORESCENT PRISMATIC)
WHITE	BACKGROUND	TYPE C (HIGH SPECIFIC INTENSITY)
BLACK	LEGEND & BORDERS	VINYL NON-REFLECTIVE SHEETING

REFER TO THE BC SHEETS FOR SHEETING REQUIREMENT ON CHANNELIZING DEVICES.

The five categories of work duration and their time at a location shall be:

A. Long-term stationary is work that occupies a location more than 3 days.

B. Intermediate-term stationary is work that occupies a location more than one daylight period up to 3 days, or nighttime work lasting more than 1 hour.

C. Short-term stationary is daytime work that occupies a location for more than 1 hour, but less than 12 hours.

D. Short duration is work that occupies a location up to 1 hour.

E. Mobile is work that moves intermittently or continuously.

Texas Department of Transportation
Traffic Operations Division

TRAFFIC CONTROL PLAN TYPICAL DETAILS

WZ(TD)-03

©TxDOT February 1998

REVISIONS
4-98
3-03

DN: TXDOT	CK: TXDOT	DW: TXDOT	CK: TXDOT
CONT	SECT	JOB	HIGHWAY
0091	03	021	SH289
DIST	COUNTY		SHEET NO.
18	ELLIS		98

DATE:
FILE:

P 201107 01

DISCLAIMER:
The use of this standard is governed by the "Texas Engineering Practice Act". No warranty of any kind is made for any purpose whatsoever. TxDOT assumes no responsibility for the conversion of this standard to other formats or for incorrect results or damages resulting from its use.

DATE:
FILE:

WORK ZONE SHORT TERM PAVEMENT MARKINGS DETAILS

SOLID LINES

DOUBLE NO-PASSING LINE

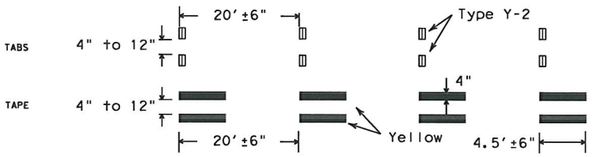

SINGLE NO-PASSING LINE or CHANNELIZATION LINE

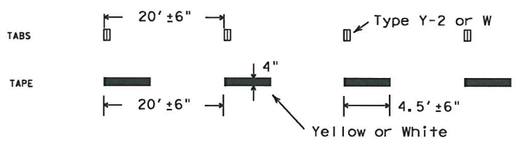

BROKEN LINE

(FOR CENTER LINE OR LANE LINE.)

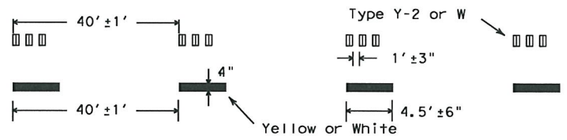

NOTES:

1. Short term pavement markings may be prefabricated markings (stick down tape) or temporary flexible-reflective roadway marker tabs unless otherwise specified elsewhere in plans.
2. Short term pavement markings shall NOT be used to simulate edge lines.
3. Dimensions indicated on this sheet are typical and approximate. Variations in size and height may occur between markers or devices made by manufacturers, by as much as 1/4 inch, unless otherwise noted.
4. Temporary flexible-reflective roadway marker tabs will require normal maintenance replacement when used on roadways with an ADT per lane of up to 7500 vehicles with no more than 10% truck mix. When roadways exceed these values, additional maintenance replacement of devices should be planned.
5. No segment of roadway open to traffic shall remain without permanent pavement markings for a period greater than 14 calendar days. The Contractor will be responsible for maintaining short term pavement markings until permanent pavement markings are in place. When the Contractor is responsible for placement of permanent pavement markings, no segment of roadway shall remain without permanent pavement markings for a period greater than 14 calendar days unless weather conditions prohibit placement. Permanent pavement markings shall be placed as soon as weather permits.
6. For two lane, two-way roadways, DO NOT PASS signs shall be erected to mark the beginning of sections where passing is prohibited and PASS WITH CARE signs shall be erected to mark the beginning of sections where passing is permitted. Signs shall be in accordance with the "Texas Manual on Uniform Traffic Control Devices" (TMUTCD) and may be used to indicate the limits of no-passing zones for up to 14 calendar days. Permanent pavement markings should then be placed.
7. For low volume two lane, two-way roadways of 4000 ADT or less, no-passing lines may be omitted when approved by the Engineer. DO NOT PASS and PASS WITH CARE signs shall be erected (see note 6).

TEMPORARY FLEXIBLE-REFLECTIVE ROADWAY MARKER TABS (TABS)

1. Temporary flexible-reflective roadway marker tabs detailed on this sheet will be designated Type Y-2 (two amber reflective surfaces with yellow body); Type Y (one amber reflective surface with yellow body); and Type W (one white or silver reflective surface with white body). Additional details may be found on BC(10).
2. Tabs shall meet requirements of Departmental Material Specification DMS-8242.
3. When dry, tabs shall be visible for a minimum distance of 200 feet during normal daylight hours and when illuminated by automobile low-beam head light at night, unless sight distance is restricted by roadway geometrics.
4. No two consecutive tabs nor four tabs per 1000 feet of line shall be missing or fail to meet the visual performance requirements of Note 3.

REMOVABLE - PREFABRICATED PAVEMENT MARKINGS

1. Removable prefabricated pavement markings shall meet the requirements of DMS-8241. A list of prequalified products can be found at the following web site:
   ftp://ftp.dot.state.tx.us/pub/txdot-info/gsd/pdf/pavemark.pdf

NON REMOVABLE - PREFABRICATED PAVEMENT MARKINGS

1. Non-removable prefabricated pavement markings (foil back) shall meet the requirements of DMS-8240 or the TXDOT Purchase Specification No. 550-74-89. A list of prequalified products and a copy of the TXDOT Purchase Specifications can be found at web sites:
   ftp://ftp.dot.state.tx.us/pub/txdot-info/gsd/pdf/pavement.pdf
   ftp://ftp.dot.state.tx.us/pub/txdot-info/gsd/pdf/tss/tss377.pdf

RAISED PAVEMENT MARKERS

1. All raised pavement markers used for work zone markings shall meet the requirements of Item 672, "RAISED PAVEMENT MARKERS" and Departmental Material Specification DMS-4200.
2. A list of prequalified reflective raised pavement markers can be found at the following web site:
   ftp://ftp.dot.state.tx.us/pub/txdot-info/gsd/pdf/dms4200preq.pdf

WORK ZONE SHORT TERM PAVEMENT MARKINGS PATTERNS

CENTER LINE & NO-PASSING ZONE BARRIER LINES FOR TWO LANE TWO-WAY HIGHWAYS

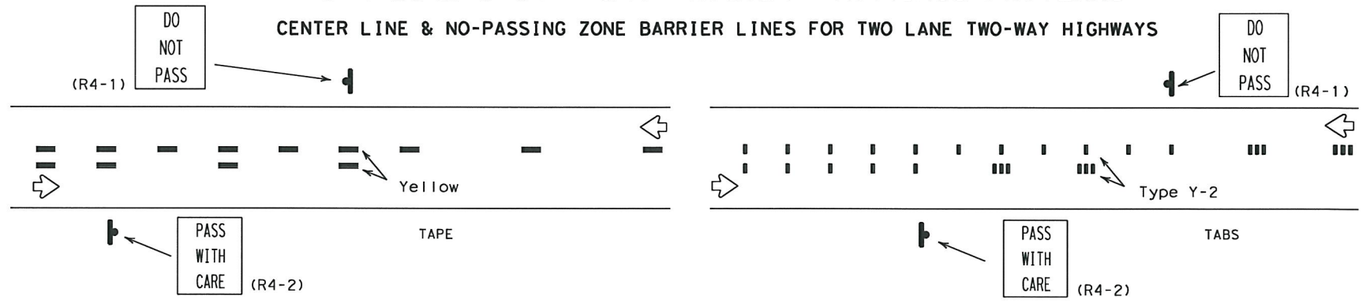

LANE LINES FOR DIVIDED HIGHWAY

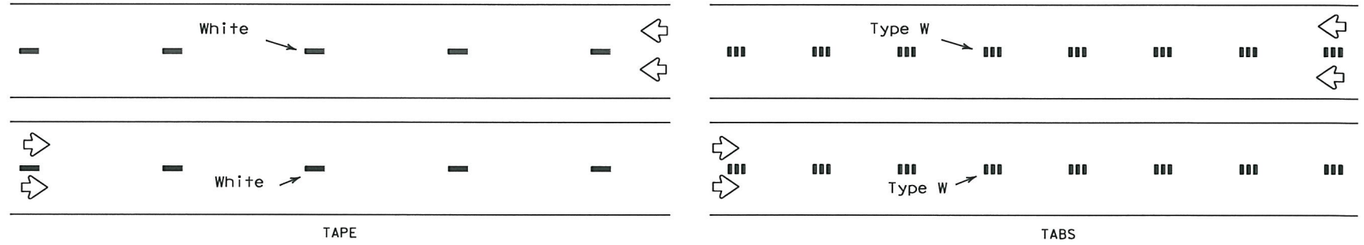

LANE & CENTER LINES FOR MULTILANE UNDIVIDED HIGHWAYS

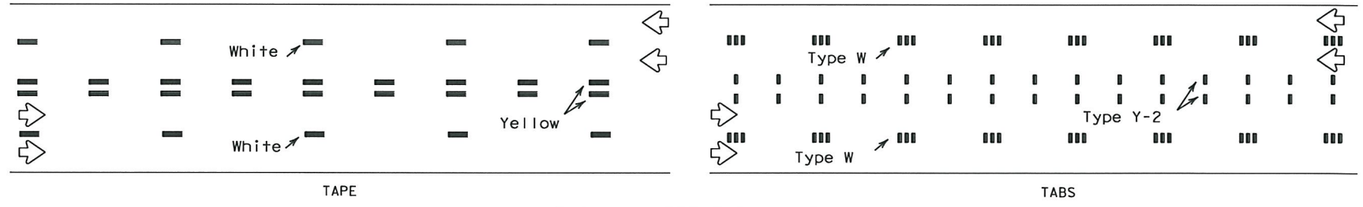

TWO-WAY LEFT TURN LANE

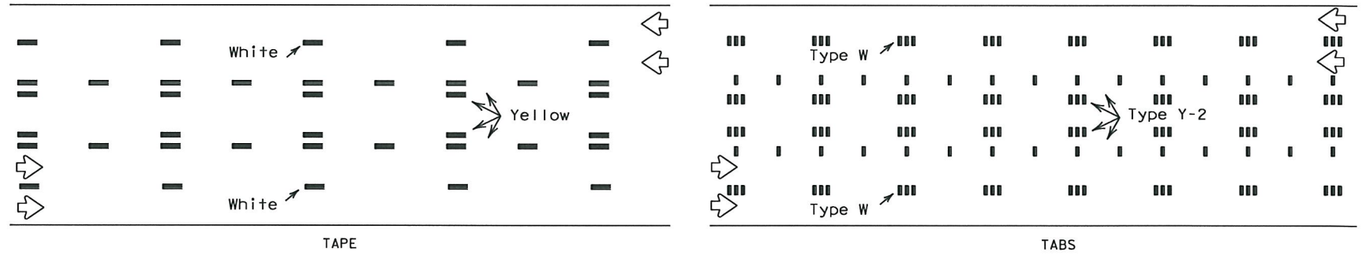

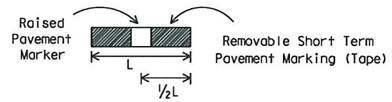

If raised pavement markers are used to supplement REMOVABLE short term markings, the markers shall be applied to the top of the tape at the approximate mid length of the tape. This allows an easier removal of raised markers and tape.

DEPARTMENT MATERIAL SPECIFICATIONS	
PREFABRICATED PAVEMENT MARKINGS-PERMANENT	DMS-8240
PREFABRICATED PAVEMENT MARKINGS-REMOVABLE	DMS-8241
TEMPORARY FLEXIBLE-REFLECTIVE ROADWAY MARKER TABS	DMS-8242
PAVEMENT MARKERS (REFLECTORIZED)	DMS-4200

Texas Department of Transportation
Traffic Operations Division

WORK ZONE SHORT TERM PAVEMENT MARKINGS

WZ(STPM)-03

© TxDOT April 1992

REVISIONS
1-97
3-03

DN: TXDOT	CK: TXDOT	DW: TXDOT	CK: TXDOT
CONT	SECT	JOB	HIGHWAY
0091	03	021	SH289
DIST	COUNTY		SHEET NO.
18	ORANGE		99

P 201107 01

DISCLAIMER:
The use of this standard is governed by the "Texas Engineering Practice Act". No warranty of any kind is made by TxDOT for any purpose whatsoever. TxDOT assumes no responsibility for the conversion of this standard to other formats or for incorrect results or damages resulting from its use.

DATE:
FILE:

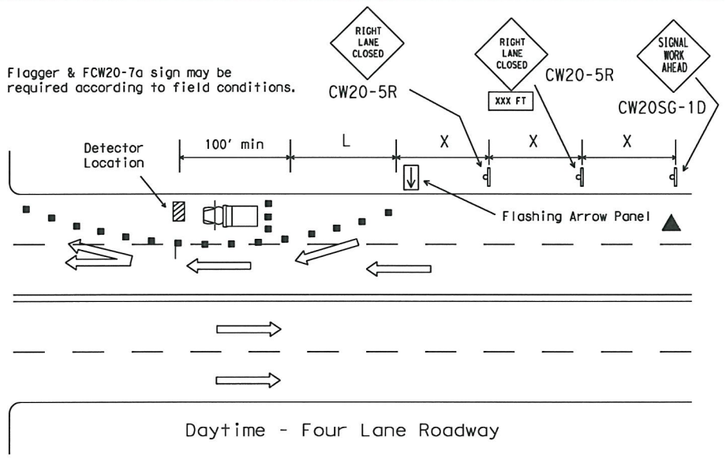

Posted Speed	Formula	Minimum Desirable Taper Lengths ** 10' Offset	11' Offset	12' Offset	Suggested Maximum Spacing of Device On a Taper	On a Tangent	Minimum Sign Spacing X Distance
30	$L=\frac{WS^2}{60}$	150'	165'	180'	30'	60'-75'	120'
35		205'	225'	245'	35'	70'-90'	160'
40		265'	295'	320'	40'	80'-100'	240'
45	L=WS	450'	495'	540'	45'	90'-110'	320'
50		500'	550'	600'	50'	100'-125'	400'
55		550'	605'	660'	55'	110'-140'	500'
60		600'	660'	720'	60'	120'-150'	600'
65		650'	715'	780'	65'	130'-165'	700'
70		700'	770'	840'	70'	140'-175'	800'
75		750'	825'	900'	75'	150'-185'	900'

** Taper lengths have been rounded off.
L=Length of Taper (FT.) W=Width of Offset (FT.) S=Posted Speed (MPH)

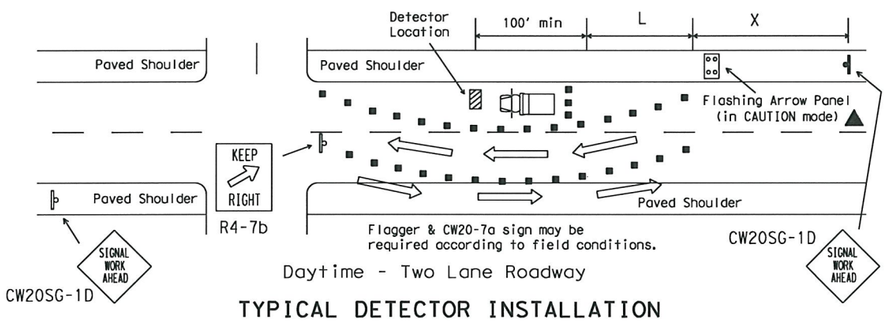

TYPICAL DETECTOR INSTALLATION
OR OTHER WORK OPERATIONS THAT ARE SHORT TERM OR SHORT DURATION

Nighttime Channelizing Devices shall be reflectorized.

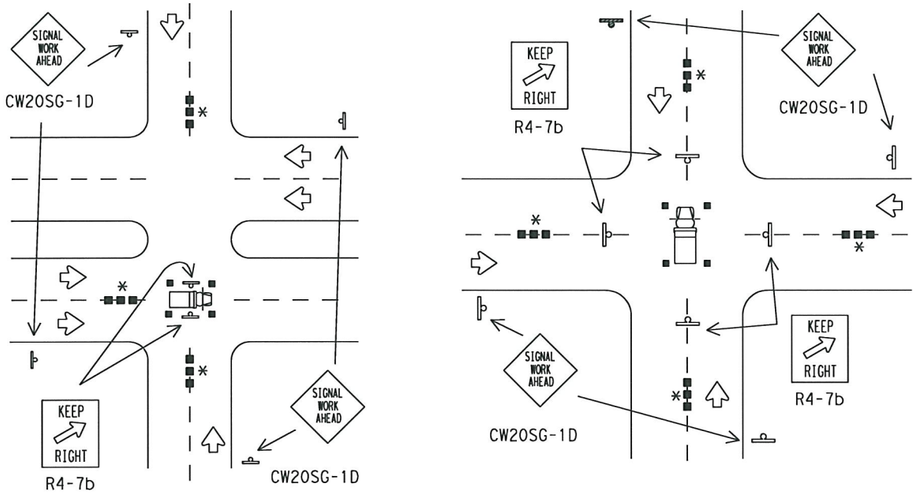

TYPICAL HANGING SIGNAL INSTALLATIONS
OR OTHER WORK OPERATIONS THAT ARE SHORT TERM OR SHORT DURATION

* Advance warning channelizing devices are optional.

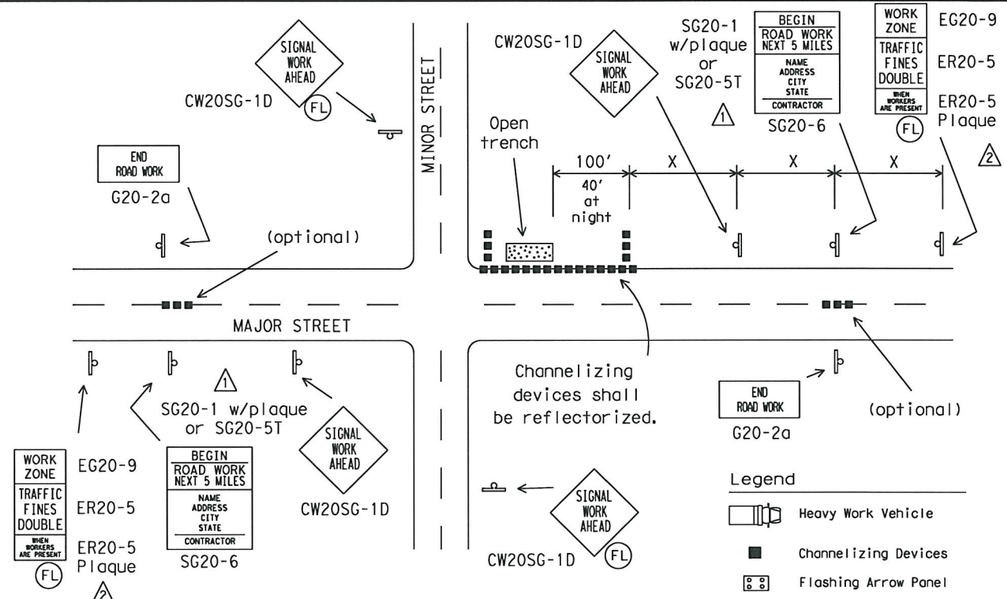

TYPICAL ADVANCE SIGNING
FOR LONG TERM and INTERMEDIATE-TERM STATIONARY WORK OPERATIONS

Observe Warning Signs State Law (R20-3) shall be required.
See BC(2).
Location will be as directed by the Engineer.

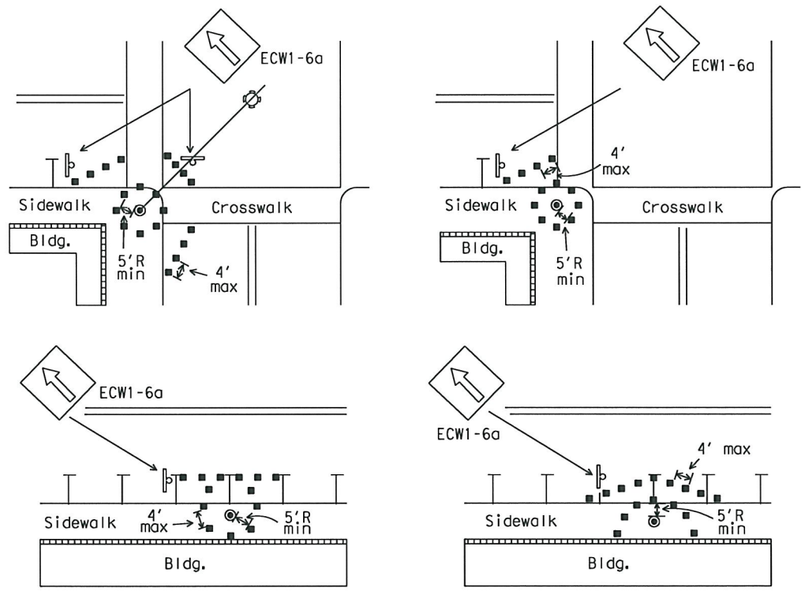

Channelizing devices should not be placed closer than 5 foot radius (minimum) to signal poles.
Parking may be eliminated by placing channelizing devices in spaces.
If pedestrian walkways are blocked, refer to the Texas Manual on Uniform Traffic Control Devices (TMUTCD) Part 6.

TYPICAL RESTRICTED PEDESTRIAN MOVEMENTS
FOR ALL WORK OPERATIONS REGARDLESS OF WORK DURATION

▲ The arrow panel may be omitted when stated elsewhere in the plans.

1. Typical channelizing device is the 28" cone.
2. Plastic drums or vertical panels may be used if approved by the Engineer.
3. For several closely adjoining projects, advance signing may not be required in advance of each intersection, but only in advance of the intersections at the project limits.
4. See details elsewhere in the plans for advance signing requirements.
5. Advance signs shall be in place when signal construction operations are in progress.
6. The contractor shall remove advance signs when no construction operations are underway.
7. Obstructions or hazards at the work area shall be clearly marked and delineated at all times.
8. All holes, trenches or other hazardous areas shall be adequately protected by lights or other protective devices.
9. Trenches shall be covered or surrounded with orange plastic construction fence as directed by the Engineer.
10. Flagger and FCW20-7a sign may be required according to field conditions.
11. Vehicles parked in roadway shall be equipped with two strobes.
12. High level flags at corners of vehicle may also be used.
13. Work operations that require work vehicle in traveled way 20 minutes or less may use cones, high level flags and strobes as advance warning devices.
14. Cones should only be placed around vehicle.
15. Flaggers may be used on high speed rural intersections.

Texas Department of Transportation
Traffic Operations Division

TRAFFIC SIGNAL INSTALLATION TYPICAL DETAILS

SHEET 1 OF 2 WZ(BTS-1)-03

©TxDOT April 1992

DN: TXDOT	CK: TXDOT	DW: TXDOT	CK: TXDOT
CONT	SECT	JOB	HIGHWAY
0091	03	021	SH289
DIST	COUNTY		SHEET NO.
18	[illegible]		100

REVISIONS
2-98
4-98
10-99
3-03

1164

P 201107 01

DISCLAIMER:
The use of this standard is governed by the "Texas Engineering Practice Act". No warranty of any kind is made by TxDOT for any purpose whatsoever. TxDOT assumes no responsibility for the conversion of this standard to other formats or for incorrect results or damages resulting from its use.

"ABOVE LANE" WORK PERFORMED BY BUCKET TRUCK

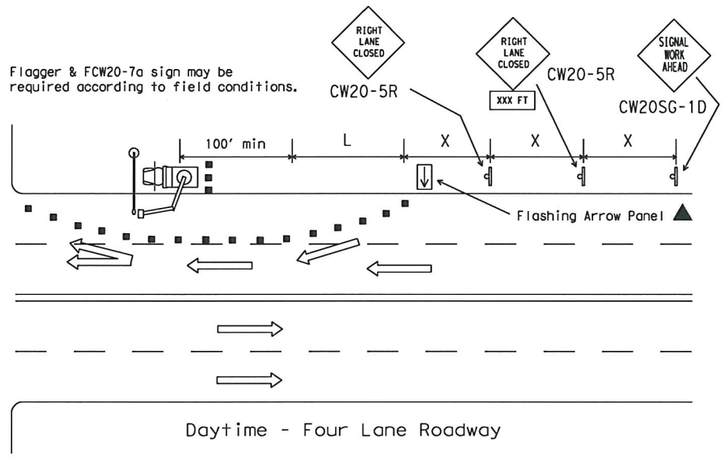

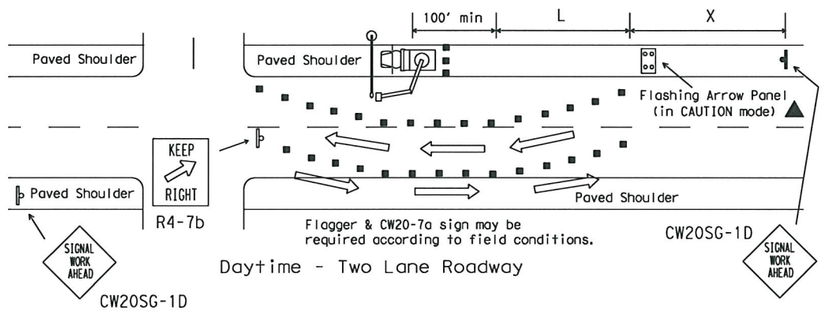

▲ The arrow panel may be omitted when stated elsewhere in the plans.

"ABOVE TRUCK" WORK PERFORMED BY BUCKET TRUCK

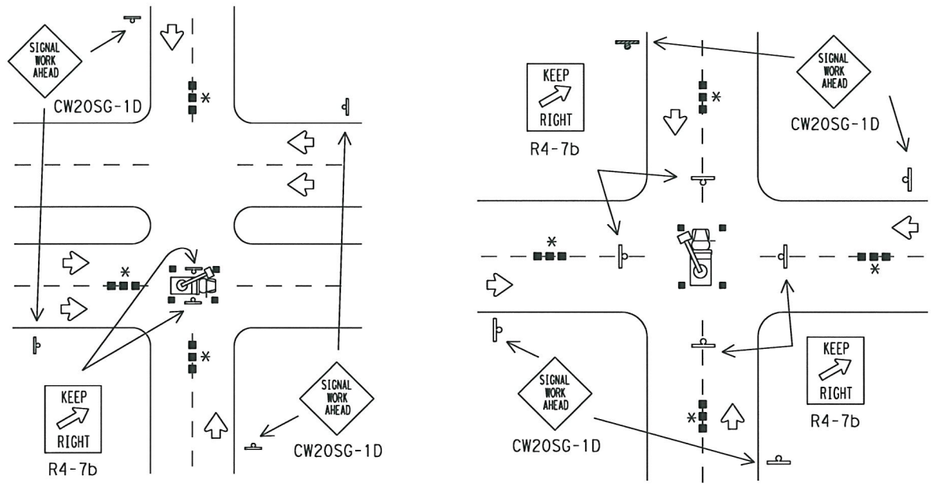

GENERAL NOTES FOR WORK ZONE SIGNS

1. Contractor shall install and maintain signs in a straight and plumb condition and/or as directed by the Engineer.
2. Wooden sign posts shall be painted white.
3. Barricades shall NOT be used as sign supports.
4. Nails shall NOT be used to attach signs to any support.
5. All signs shall be installed in accordance with the plans or as directed by the Engineer. Signs shall be used to regulate, warn, and guide the traveling public safely through the work zone.
6. The Contractor may furnish either the sign design shown in the plans or in the "Standard Highway Sign Designs for Texas" (SHSD). The Engineer/Inspector may require the Contractor to furnish other work zone signs that are shown in the "Texas Manual on Uniform Traffic Control Devices" (TMUTCD) but may have been omitted from the plans. Any variation in the plans shall be documented by written agreement between the Engineer and the Contractor's Responsible Person. All changes must be documented in writing before being implemented. This can include documenting the changes in the Inspector's TxDOT diary and having both the Inspector and Contractor initial and date the agreed upon changes. The additional signs requested by the Engineer/Inspector shall not be subsidiary.
7. The Contractor shall furnish sign supports listed in the "Compliant Work Zone Traffic Control Device List" (CWZTCD). The Contractor shall install the sign support in accordance with the manufacturer's recommendations. If there is a question regarding installation procedures, the Contractor shall furnish the Engineer a copy of the manufacturer's installation recommendations so that the Engineer can verify the correct procedures are being followed.
8. The contractor is responsible for sign installations and replacing signs with damaged or cracked substrates and/or damaged or marred reflective sheeting as directed by the Engineer/Inspector.
9. Identification markings may be shown only on the back of the sign substrate. The maximum height of letters and/or company logos used for identification shall be 1".
10. The Contractor shall replace damaged wood posts. New or damaged wood sign posts shall not be spliced.

Duration of Work (as defined by the TMUTCD Part 6)

The types of sign supports, the size of signs, and the type of sign substrates can vary based on the type of work being performed. The Engineer is responsible for selecting the appropriate size sign for the type of work being performed. The Contractor is responsible for ensuring that the sign support and substrate meets crashworthiness and length of work requirements.

a. Long-term stationary is work that occupies a location more than 3 days.
b. Intermediate-term stationary is work that occupies a location more than one daylight period up to 3 days, or nighttime work lasting more than 1 hour.
c. Short-term stationary is daytime work that occupies a location for more than 1 hour, but less than 12 hours.
d. Short duration is work that occupies a location up to 1 hour.
e. Mobile is work that moves intermittently or continuously.

SIGN MOUNTING HEIGHT

1. The bottom of Long-term/Intermediate-term signs shall be at least 7 feet, but not more than 9 feet, above the paved surface.
2. The bottom of Short-term/Short Duration signs shall be a minimum of 1 foot above the pavement surface but no more than 2 feet above the ground.
3. Long-term/Intermediate-term Signs may be used in lieu of Short-term/Short Duration signing.
4. Short-term/Short Duration signs shall be used only during daylight and shall be removed at the end of the workday.
5. Regulatory signs shall be mounted at least 7 feet, but not more than 9 feet, above the paved surface regardless of work duration.

REMOVING OR COVERING

1. When sign messages may be confusing or do not apply, the signs shall be removed or completely covered.
2. Long-term stationary or intermediate stationary signs installed on square metal tubing may be turned away from traffic 90 degrees when the sign message is not applicable. This type of sign support meets the crashworthiness standards regardless of the direction of impact. This technique may not be used for signs installed in the median of divided highways or near any intersections where the sign may be seen from approaching traffic.
3. Signs installed on skids shall not be turned at 90 degree angles to the roadway. These signs should be removed or completely covered when not required.
4. When signs are covered, the material used shall be opaque, such as heavy mil black plastic.
5. Burlap shall NOT be used to cover signs.
6. Duct tape or other adhesive material shall NOT be affixed to a sign face. These materials can damage the retroreflectivity of sign sheeting.
7. Signs shall be removed upon completion of the work.

SIGN SUPPORT WEIGHTS

1. Where sign supports require the use of weights to keep from turning over, the use of sandbags with dry, cohesionless sand is recommended.
2. The sandbags will be tied shut to keep the sand from spilling and to maintain a constant weight.
3. Rock, concrete, iron, steel or other solid objects will not be permitted for use as sign support weights.
4. Sandbags should weigh a minimum of 35 lbs and a maximum of 50 lbs.
5. Sandbags shall be made of a durable material that tears upon vehicular impact.
6. Rubber (such as tire inner tubes) shall NOT be used for sandbags.
7. Rubber ballasts (such as those used with cones or edgeline channelizers) shall NOT be used as sign support weights.
8. Sandbags shall only be placed along or laid over the base supports of the traffic control device and shall not be suspended above ground level or hung with rope, wire, chains or other fasteners. Sandbags shall be placed along the length of the skids to weigh down the sign support.
9. Sandbags shall NOT be placed under the skid and shall not be used to level sign supports placed on slopes.

Only pre-qualified products shall be used. A copy of the "Compliant Work Zone Traffic Control Devices List" (CWZTCD) describes pre-qualified products and their sources and may be obtained by contacting:

Standards Engineer
Traffic Operations Division - TE
Texas Department of Transportation
125 East 11th Street
Austin, Texas 78701-2483
Phone (512) 416-3120
Fax (512) 416-3299

Instructions to locate the "CWZTCD" on TxDOT website are:

Start at website - www.dot.state.tx.us
Click on "About TxDOT",
Click on "Organizational Chart",
Click on Traffic Operations Box,
Click on "Compliant Work Zone Traffic Control Devices",
Click on "View PDF".
This site is printable.

DEPARTMENTAL MATERIAL SPECIFICATIONS

PLYWOOD SIGN BLANKS	DMS-7100
ALUMINUM SIGN BLANKS	DMS-7110
FLAT SURFACE REFLECTIVE SHEETING	DMS-8300
FLEXIBLE ROLL-UP REFLECTIVE SIGNS	DMS-8310
VINYL NON-REFLECTIVE SHEETING	DMS-8320

COLOR	USAGE	SHEETING MATERIAL
ORANGE	BACKGROUND	TYPE E (FLUORESCENT PRISMATIC)
WHITE	BACKGROUND	TYPE C (HIGH SPECIFIC INTENSITY)
WHITE	LEGEND & BORDERS	TYPE C (HIGH SPECIFIC INTENSITY)
BLACK	LEGEND & BORDERS	VINYL NON-REFLECTIVE SHEETING

Texas Department of Transportation
Traffic Operations Division

TRAFFIC SIGNAL INSTALLATION BARRICADES AND SIGNS

SHEET 2 OF 2 — WZ(BTS-2)-03

© TxDOT April 1992

REVISIONS
2-98
4-98
10-99
3-03

DN: TXDOT	CK: TXDOT	DW: TXDOT	CK: TXDOT
CONT	SECT	JOB	HIGHWAY
0091	03	021	SH289
DIST	COUNTY		SHEET NO.
18			101

DATE:
FILE:

1168

P 201107 01

DISCLAIMER:
The use of this standard is governed by the "Texas Engineering Practice Act". No warranty of any kind is made by TxDOT for any purpose whatsoever. TxDOT assumes no responsibility for the conversion of this standard to other formats or for incorrect results or damages resulting from its use.

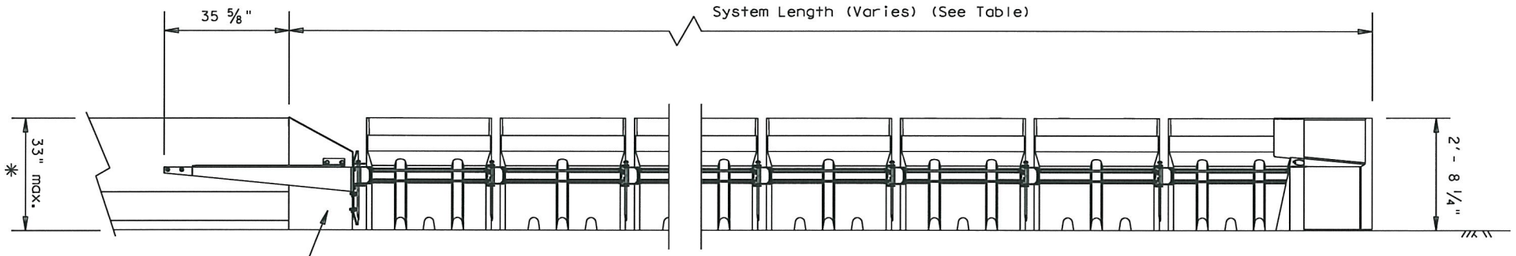

ELEVATION

See Manufacturer's Product Manual for Additional Details

* The ABSORB 350 is design be applied to barrier up to 33" tall. To accommodate taller barriers, a transitional barrier must be used. (See Manufacturer's requirments)

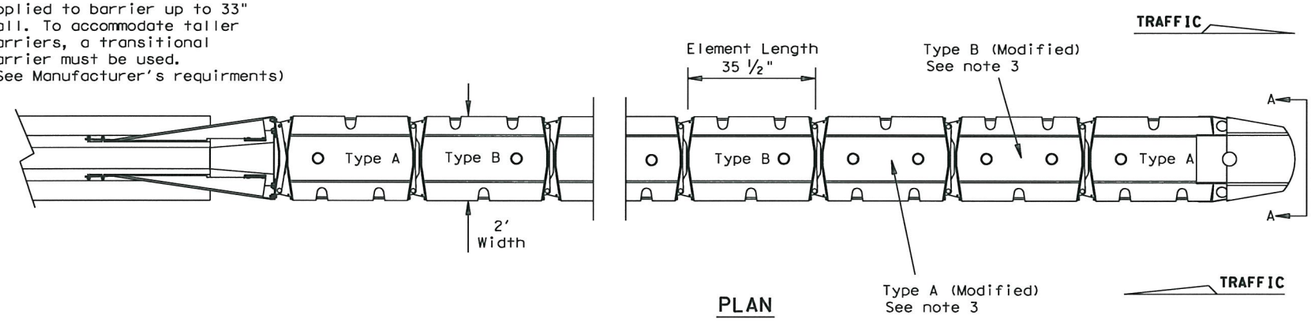

PLAN

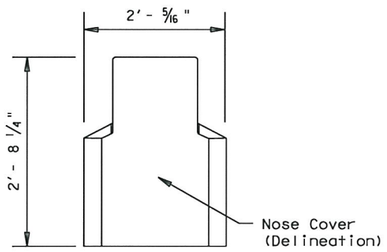

SECTION A-A

Nose Piece delineation orientation, is shown elsewhere on the plans.

DESIGN SPEED (mph)	NUMBER OF ELEMENTS	SYSTEM LENGTH (approx.)
45 OR LESS	5	20' - 0"
50	6	23' - 0"
55	7	26' - 0"
60	9	32' - 0"
65	10	35' - 0"
70	12	42' - 0"

The ABSORB 350 is only to be used in temporary (Work Zone) locations.

BACKUP SUPPORT
Steel Backup (Attach to Concrete Barriers, Precast or Cast-in-Place)

TRANSITION OPTIONS
Steel Backup to Vertical Wall
Steel Backup to Concrete Traffic Barriers

Backup and Transition types are shown elsewhere on the plans (i.e. Attenuator location details or in the general notes).

GENERAL NOTES

1. Refer to Installation manual and configuration chart for specific system assembly and element orientation. For additional information. Contact Interstate Steel Inc. at (432)263-3725.
2. The ABSORB 350 system is approved for use in temporary (Work Zone) locations. The ABSORB 350 is a water filled non-redirective, gating crash cushion that does not need to be attached to a foundation and can be installed on top of concrete, asphalt, or any surface capable of bearing the weight of the system.
3. Modified Type A and Type B elements require drilling of an additional 3" Dia. hole (as shown). See Manufacturers installation manual for details.
4. Maximum permissible cross-slope is 8%.
5. The installation area should be free from curbs, elevated objects, or depressions.
6. The ABSORB 350 should be approximately parallel with the barrier or ℄ of merging barrier.

BILL OF MATERIAL

PRODUCT CODE	QTY	DESCRIPTION
B010825	1	Replacement Nose Assembly
B010830	1	Nose Piece Cover
B000303	TBD	Type A Element Assembly
B000708	TBD	Type B Element Assembly
B000706	TBD	Replacement Element Type A
B000708	TBD	Replacement Element Type B
B000520	1	Replacement Transition to PCB
A010420	TBD	Pin Link Hinge Locking
B000520	1	Transition Adapter Assembly
B000209	TBD	Strap Left Adapter
B000207	TBD	Strap Right Adapter
B000611	TBD	Adapter Hinge Plate
A000521	TBD	Anchor Bolt (U-Bolt)
B000518	1	Tapered Adapter
B020421	TBD	I Beam Adapter Female
B020420	TBD	I Beam Adapter Male
C021212	1	Transition to Link

(TBD) = To Be Determined, depending on System Length. (See manufacturer's product manual)

Required Information
The use of the ABSORB 350 is restricted to a maximum barrier height of 33 inches.

Texas Department of Transportation
Design Division Standard

BARRIER SYSTEMS ABSORB 350 CRASH CUSHION (TEMPORARY, WORK ZONE)

ABSORB-10

FILE: absorb10.dgn	DN: TxDOT	CK: AM	DW: BD	CK:
© TxDOT September 2005	CONT	SECT	JOB	HIGHWAY
REVISIONS	0091	03	021	SH289
	DIST	COUNTY		SHEET NO.
	18	COLLIN		102

DATE:
FILE:

P 201107 01

DISCLAIMER:
The use of this standard is governed by the "Texas Engineering Practice Act". No warranty of any kind is made by TxDOT for any purpose whatsoever. TxDOT assumes no responsibility for the conversion of this standard to other formats or for incorrect results or damages resulting from its use.

DATE:
FILE:

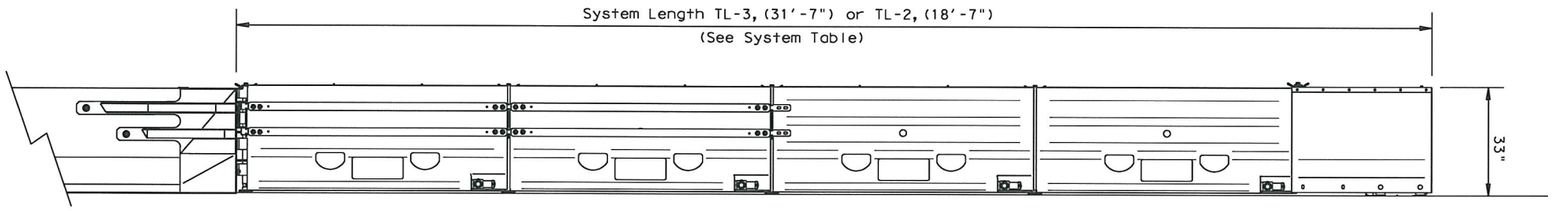

ELEVATION

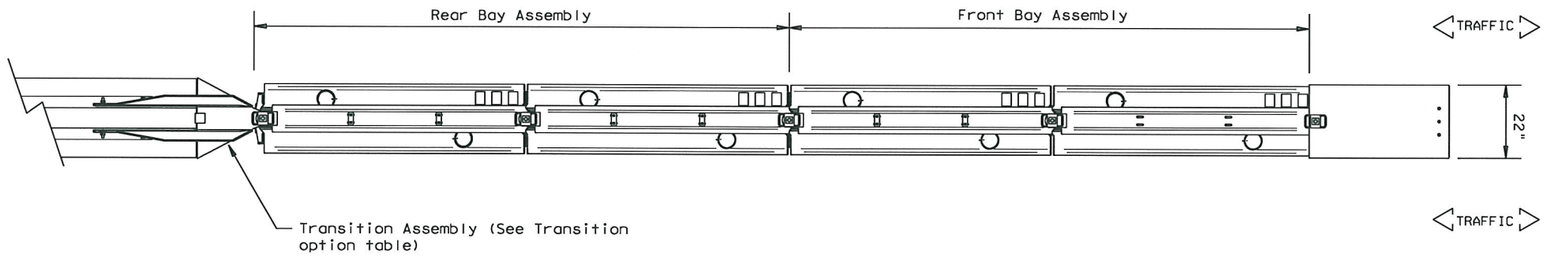

PLAN

Bi-Directional traffic flow shown.

GENERAL NOTES

1. For additional information contact: Energy Absorption Systems Inc. 35 E. Wacker Dr. Suite 1100 Chicago, IL. 60601. 1(888)323-6374.
2. Refer to Installation manual and configuration chart for specific system assembly and element orientation.
2. The ACZ 350 system is approved for use in temporary (Work Zone) locations. The ACZ 350 is a water filled non-redirective, gating crash cushion that does not need to be attached to a foundation and can be installed on top of concrete, asphalt, or any surface capable of bearing the weight of the system.
3. The ACZ 350 system consist of four major components, the transition assembly, rear bay assembly, front bay assembly, and nose assembly. See manufacturer's installation manual for details.
4. Maximum permissible cross-slope is 8% .
5. The installation area should be free from curbs, elevated objects, or depressions.
6. The ACZ 350 should be approximately parallel with the barrier or ℄ of merging barrier.

PARTS LIST			
ITEM	PART NO.	DESCRIPTION	QTY
1	3595601-0000	FRONT BAY ASSY, ACZ-350, TL-3	1
2	3595601-0000	REAR BAY ASSY, ACZ-350, TL-3	1
* 3	3595608-*000	NOSE, ACZ-350, (See Below)	1
4	SEE TABLE	TRANSITION ASSEMBLY	1

*See details below for nose delineation

3595608-0000 NO STRIPING
3595608-1000 TRAFFIC PASSES ON THE RIGHT
3595608-2000 TRAFFIC PASSES ON THE LEFT
3595608-3000 TRAFFIC PASSES ON BOTH SIDES

TRANSITION ASSEMBLY OPTIONS	
PART NO.	BARRIER
3595616-0000	CTB SAFETY SHAPE (8" TOP)
3595618-0000	CSB F-SHAPE (9 ½" TOP)
3595620-0000	SSCB SINGLE SLOPE (8" TOP)

TRANSITION OPTIONS
The ACZ 350 system is approved for use at bi-directional sites, additional hardware may be required. (See the Manufacurer's product manual)

Backup and Transition types are shown elsewhere on the plans (i.e. Attenuator location details or in the general notes).

ACZ-350 (NARROW) SYSTEM		
TYPE	DESIGN SPEED	SYSTEM LENGTH
ACZ-350 (TL-2)	45 OR LESS	18'- 7"
ACZ-350 (TL-3)	50 OR GREATER	31'- 7"

Texas Department of Transportation
Design Division Standard

ENERGY ABSORPTION ACZ-350 CRASH CUSHION (TEMPORARY, WORK ZONE)

ACZ(350)-10A

FILE: acz10a.dgn	DN: TxDOT	CK: AM	DW: BD	CK:	
©TxDOT March 2010	CONT	SECT	JOB	HIGHWAY	
REVISIONS	0091	03	021	SH289	
	DIST	COUNTY		SHEET NO.	
	18	ALL		103	

P-201107-01

TXDOT
100.0000 ft / IN.

NAD 83 SURFACE COORDINATES			
BORING NUMBER	NORTH	EAST	ELEV
33A	7179007.45	2497199.81	742.361
33B	7177845.101	2497064.604	726.166
35A	7180847.811	2497416.234	749.58
36A	7183621.944	2497755.581	726.372
36B	7182460.155	2497617.939	724.472
36C	7181907.464	2497539.52	726.641
38A	7187708.847	2498217.909	714.753
38B	7186770.039	2498118.181	742.546
38C	7185142.656	2497924.069	744.937

BORING NUMBER	TOTAL DEPTH INCLUDING PAVEMENT CORE (FT)	PAVEMENT CORE DEPTH	
		HMAC (IN)	BASE (IN)
33A	10.0	8.25	8.75
33B	15.0	7 1/8	7.0
35A	12.0	12.75	7.0
36A	12.0	12 1/8	5.0
36B	12.0	8.75	6.0
36C	12.0	8 3/8	8 5/8
38A	10.0	8 3/8	9 5/8
38B	10.0	10.0	8.0
38C	15.0	10.0	7.5

...\soil boring data sheet.dgn

NOTES:

1. SOIL BORING DATA IS PRESENTED FOR CONTRACTOR'S INFORMATION ONLY IN ORDER TO PROVIDE MORE DETAILED INFORMATION ON EXISTING SOIL PROPERTIES FOR REMOVAL EFFORTS.

2. PLOT OF BORING LOCATIONS CAN BE SEEN ON PLAN AND PROFILE SHEETS

STATE OF TEXAS
HASSAN SAM MOGHADASSI
84231
LICENSED
PROFESSIONAL ENGINEER

H. Moghadassi, P.E. 7/12/11
Signature of Registrant & Date

Texas Department of Transportation
© 2011

SH 289
EXISTING SOIL BORING DATA SHEET

SHEET 1 OF 1

DESIGN	FED.RD. DIV.NO.	STATE PROJECT NO.		HIGHWAY NO.
SHM	6	(SEE TITLE SHEET)		SH 289
GRAPHICS WV	STATE	DISTRICT	COUNTY	SHEET NO.
CHECK SM	TEXAS	DALLAS	COLLIN	104
CHECK	CONTROL	SECTION	JOB	
	0091	03	201107-01	

P-201107-01

7/11/2011
t:\dalgn*s\sh289\survey\soil boring data sheet.dgn

TXDOT
100.0000 ft / IN.

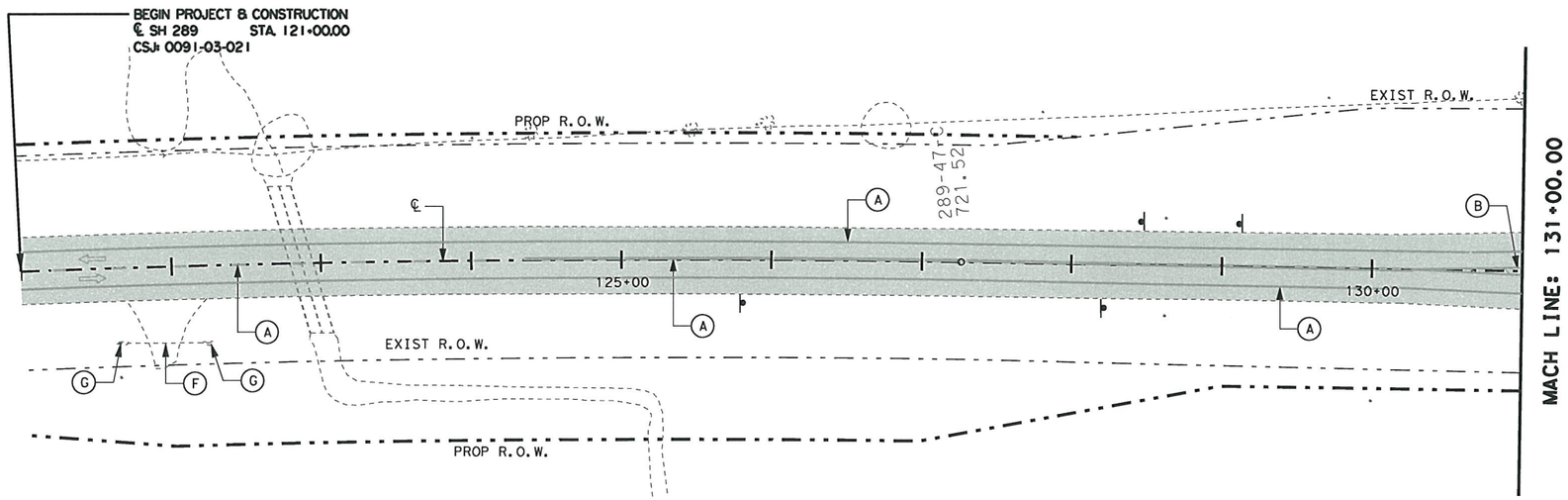

LEGEND

- TRAFFIC FLOW ARROW
- EXIST SIGN
- EXIST PAVE TO REMOVE
- EXIST DRWY TO REMOVE

NOTE: SEE CULVERT LAYOUT SHEETS FOR QUANTITIES OF STORM SEWER STRUCTURES REMOVAL.

NOTE: SEE SHEET #8 FOR EXISTING SOIL BORING DATA SHEET FOR DETAILS OF EXISTING PAVEMENT DEPTHS.

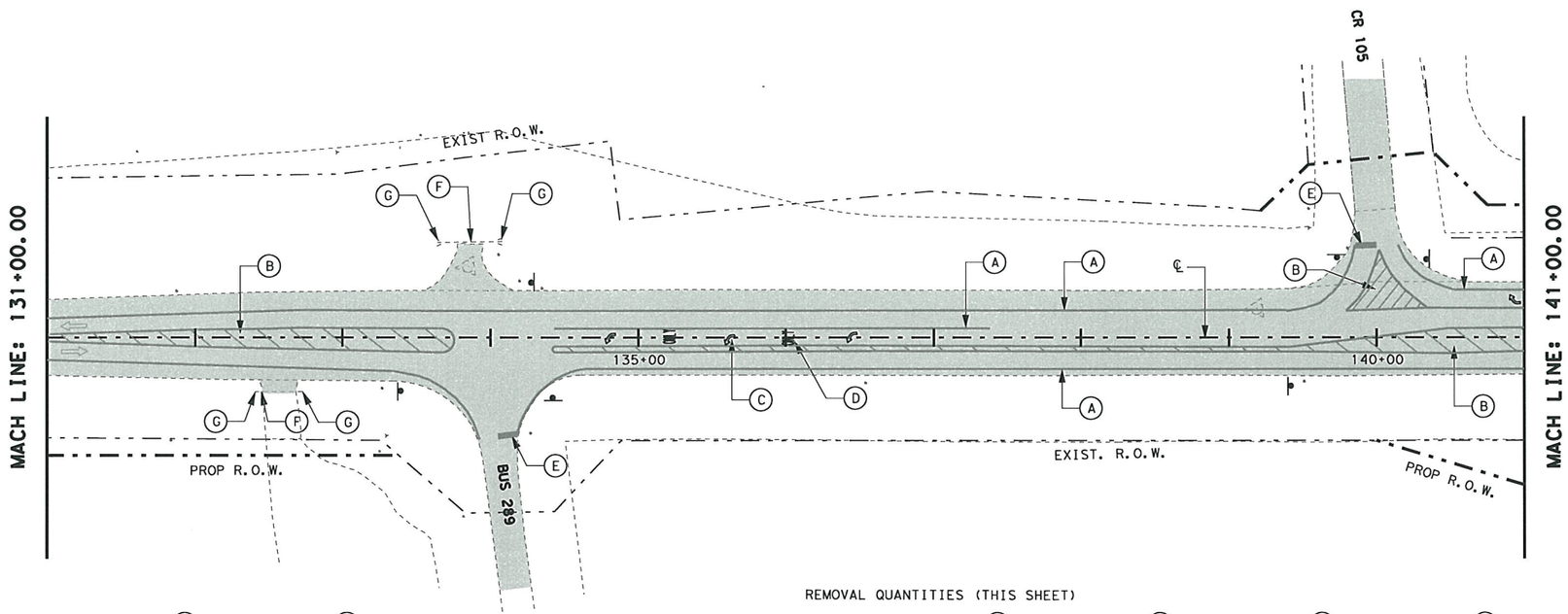

REMOVAL QUANTITIES (THIS SHEET)

(G)	(F)				(E)	(D)	(C)	(B)	(A)
496-2004	496-2007	104-2017	105-2014	644-2060	677-2007	677-2018	677-2008	677-2012	677-2001
REMOVE STR (SET)	REMOVE STR (PIPE)	REMOVE CONC (DRWY)	REMOV STAB BASE & ASPH PAV (7"-12")	REMOVE SM RD SN SUP & AM	ELIM EXT PAV MRK & MRKS (24")	ELIM EXT PAV MRK & MRKS(WORD)	ELIM EXT PAV MRK & MRKS(ARROW)	ELIM EXT PAV MRK & MRKS(ISLAND)	ELIM EXT PAV MRK & MRKS (4")
(EA)	(LF)	(SY)	(SY)	(EA)	(LF)	(EA)	(EA)	(SF)	(LF)
6	130.75	0	12731.34	12	27	2	4	11547	5617

STATE OF TEXAS
HASSAN SAM MOGHADASSI
84231
LICENSED
PROFESSIONAL ENGINEER

H. Moghadassi, P.E. & 7/12/11
Signature of Registrant Date

021RM01.dgn

Texas Department of Transportation
© 2011

SH 289
FM 455 TO N BUS 289C
REMOVAL ITEMS
BEGIN CONSTRUCTION TO STA. 141+00

SCALE: 1"= 100' Sheet 1 of 10

DESIGN	FED.RD. DIV.NO.	STATE PROJECT NO.		HIGHWAY NO.
OE	6	SEE TITLE SHEET		SH 289
GRAPHICS OE	STATE	DISTRICT	COUNTY	SHEET NO.
CHECK SM	TEXAS	DALLAS	COLLIN	105
CHECK	CONTROL	SECTION	JOB	
	0091	03	P-201107-01	

7/11/2011
t:\dal\dgn*s\sh289\design\sheets\removal\021RM01.dgn
...\sheets\removal\021RM01.dgn

TXDOT
100.0000 ft / IN.

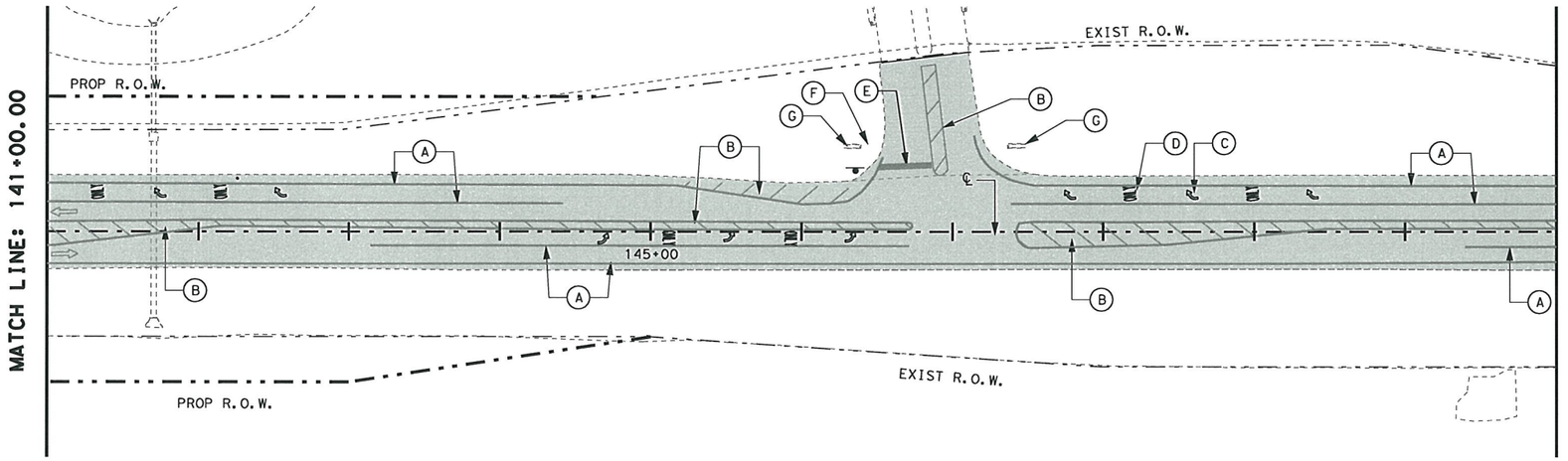

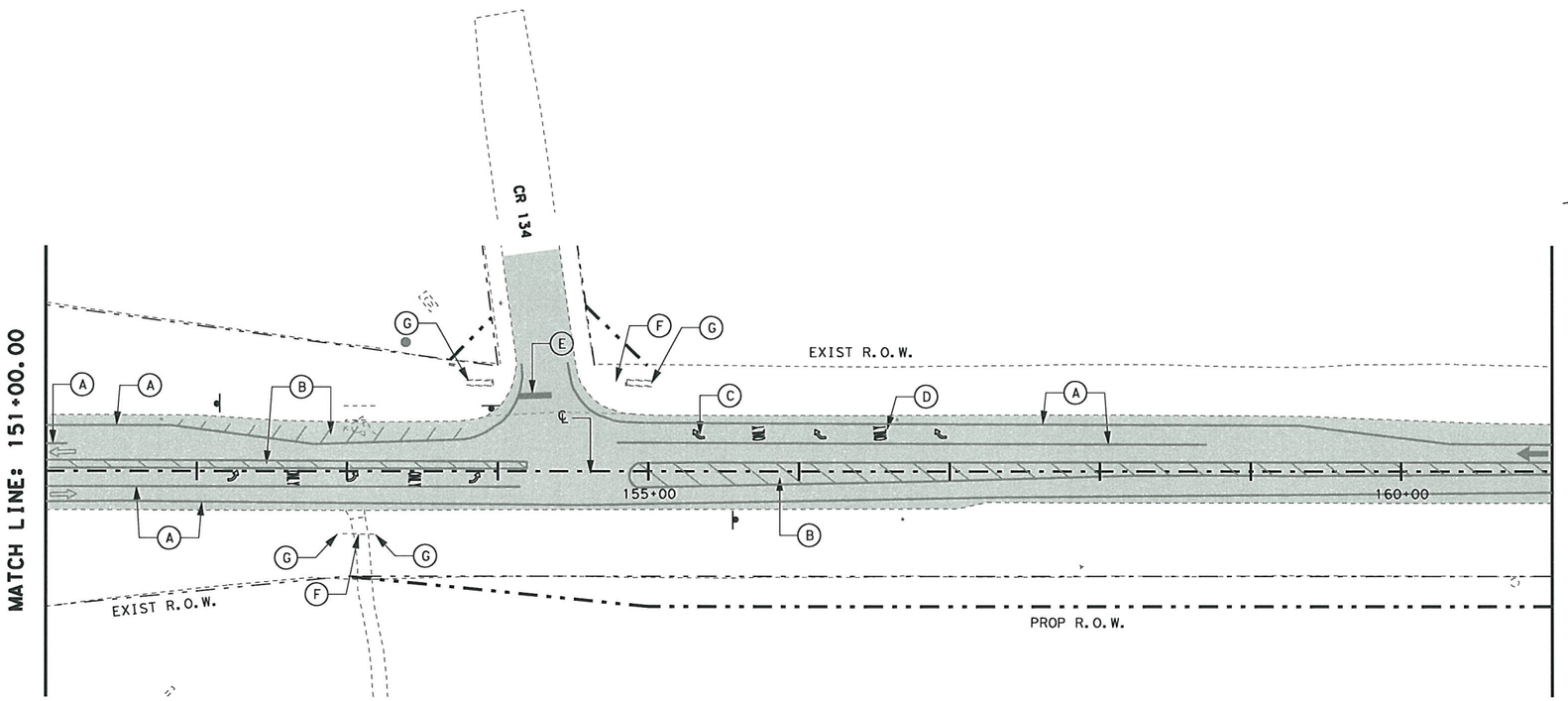

LEGEND

- TRAFFIC FLOW ARROW
- EXIST SIGN
- EXIST PAVE TO REMOVE
- EXIST DRWY TO REMOVE

NOTE: SEE CULVERT LAYOUT SHEETS FOR QUANTITIES OF STORM SEWER STRUCTURES REMOVAL.

NOTE: SEE SHEET #8 FOR EXISTING SOIL BORING DATA SHEET FOR DETAILS OF EXISTING PAVEMENT DEPTHS.

REMOVAL QUANTITIES (THIS SHEET)

G	F				E	D	C	B	A
496-2004	496-2007	104-2017	105-2014	644-2060	677-2007	677-2018	677-2008	677-2012	677-2001
REMOVE STR (SET)	REMOVE STR (PIPE)	REMOVE CONC (DRWY)	REMOV STAB BASE & ASPH PAV (7"-12")	REMOVE SM RD SN SUP & AM	ELIM EXT PAV MRK & MRKS (24")	ELIM EXT PAV MRK & MRKS (WORD)	ELIM EXT PAV MRK & MRKS (ARROW)	ELIM EXT PAV MRK & MRKS (ISLAND)	ELIM EXT PAV MRK & MRKS (4")
(EA)	(LF)	(SY)	(SY)	(EA)	(LF)	(EA)	(EA)	(SF)	(LF)
6	233	--	14696.65	4	63	10	11	16668	5321

STATE OF TEXAS
HASSAN SAM MOGHADASSI
84231
LICENSED
PROFESSIONAL ENGINEER

H. Moghadassi, P.E. 7/12/11
Signature of Registrant & Date

021RM02.dgn

Texas Department of Transportation
© 2011

SH 289
FM 455 TO N BUS 289C
REMOVAL ITEMS
STA. 141+00 TO STA. 161+00

SCALE: 1"= 100' Sheet 2 of 10

DESIGN	FED. RD. DIV. NO.	STATE PROJECT NO.		HIGHWAY NO.
OE	6	SEE TITLE SHEET		SH 289
GRAPHICS	STATE	DISTRICT	COUNTY	SHEET NO.
OE	TEXAS	DALLAS	COLLIN	106
CHECK	CONTROL	SECTION	JOB	
SM	0091	03	P-201107-01	
CHECK				

7/11/2011
t:\dal\dgn*s\sh289\design\sheets\removal\021RM02.dgn
...\sheets\removal\021RM02.dgn

TXDOT
100.0000 ft / IN.

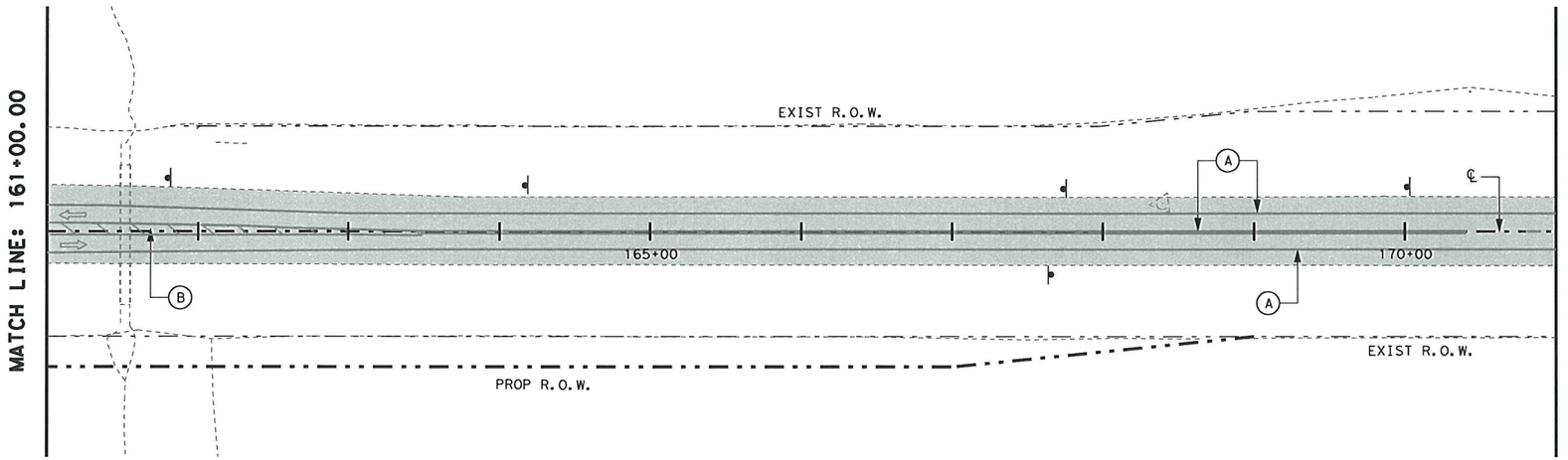

LEGEND

- TRAFFIC FLOW ARROW
- EXIST SIGN
- EXIST PAVE TO REMOVE
- EXIST DRWY TO REMOVE

NOTE: SEE CULVERT LAYOUT SHEETS FOR QUANTITIES OF STORM SEWER STRUCTURES REMOVAL.

NOTE: SEE SHEET #8 FOR EXISTING SOIL BORING DATA SHEET FOR DETAILS OF EXISTING PAVEMENT DEPTHS.

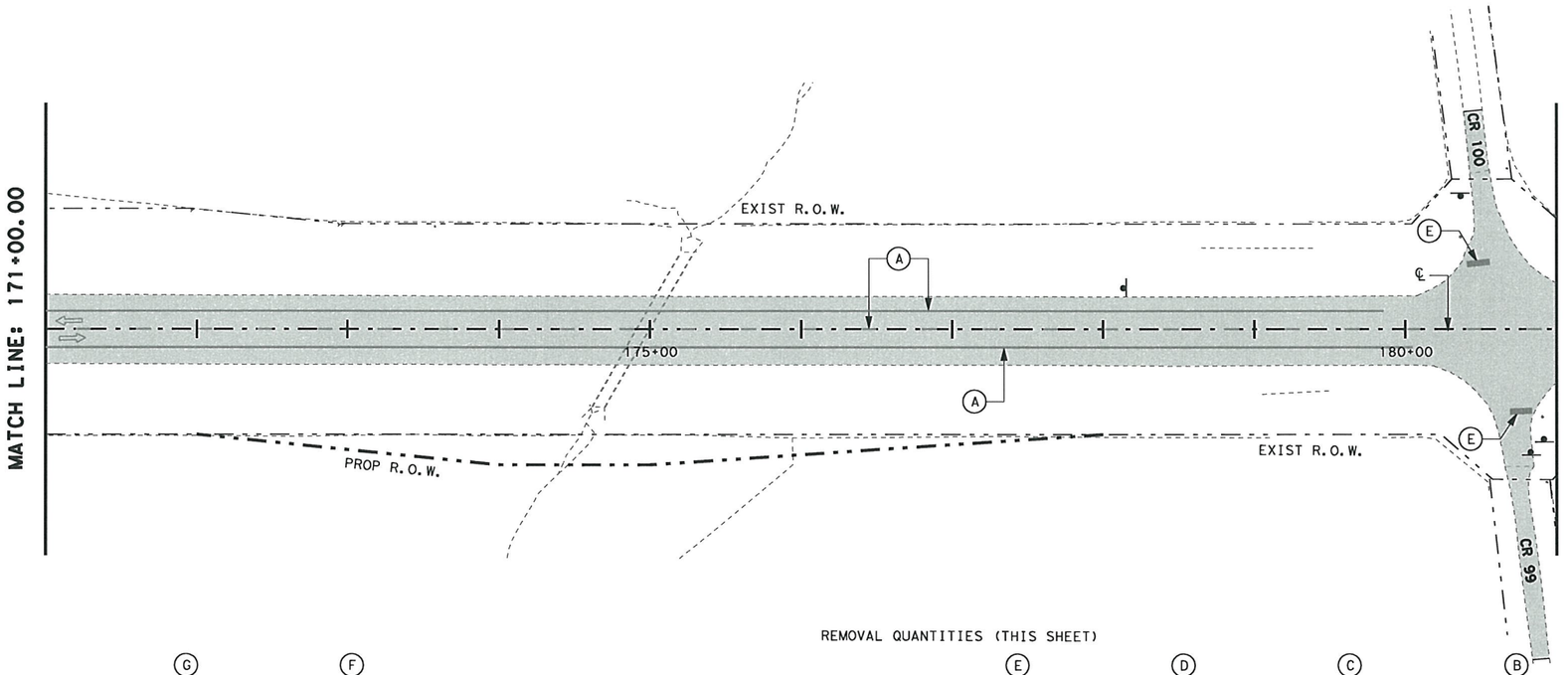

REMOVAL QUANTITIES (THIS SHEET)

(G)	(F)				(E)	(D)	(C)	(B)	(A)
496-2004	496-2007	104-2017	105-2014	644-2060	677-2007	677-2018	677-2008	677-2012	677-2001
REMOVE STR (SET)	REMOVE STR (PIPE)	REMOVE CONC (DRWY)	REMOV STAB BASE & ASPH PAV (7"-12")	REMOVE SM RD SN SUP & AM	ELIM EXT PAV MRK & MRKS (24")	ELIM EXT PAV MRK & MRKS (WORD)	ELIM EXT PAV MRK & MRKS (ARROW)	ELIM EXT PAV MRK & MRKS (ISLAND)	ELIM EXT PAV MRK & MRKS (4")
(EA)	(LF)	(SY)	(SY)	(EA)	(LF)	(EA)	(EA)	(SF)	(LF)
--	--	--	11060.08	9	28	--	--	--	5452

STATE OF TEXAS
HASSAN SAM MOGHADASSI
84231
LICENSED
PROFESSIONAL ENGINEER

H. Moghadassi , P.E. 7/12/11
Signature of Registrant & Date

021RM03.dgn

Texas Department of Transportation
© 2011

SH 289
FM 455 TO N BUS 289C
REMOVAL ITEMS
STA. 161+00 TO STA. 181+00

SCALE: 1"= 100' Sheet 3 of 10

DESIGN	FED.RD. DIV.NO.	STATE PROJECT NO.		HIGHWAY NO.
OE	6	SEE TITLE SHEET		SH 289
GRAPHICS	STATE	DISTRICT	COUNTY	SHEET NO.
OE	TEXAS	DALLAS	COLLIN	
CHECK	CONTROL	SECTION	JOB	107
SM	0091	03	22	
CHECK				

P-201107-01

7/11/2011
I:\dgn*s\sh289\design\sheets\removal\021RM03.dgn
...\sheets\removal\021RM03.dgn

TXDOT
100.0000 ft / IN.

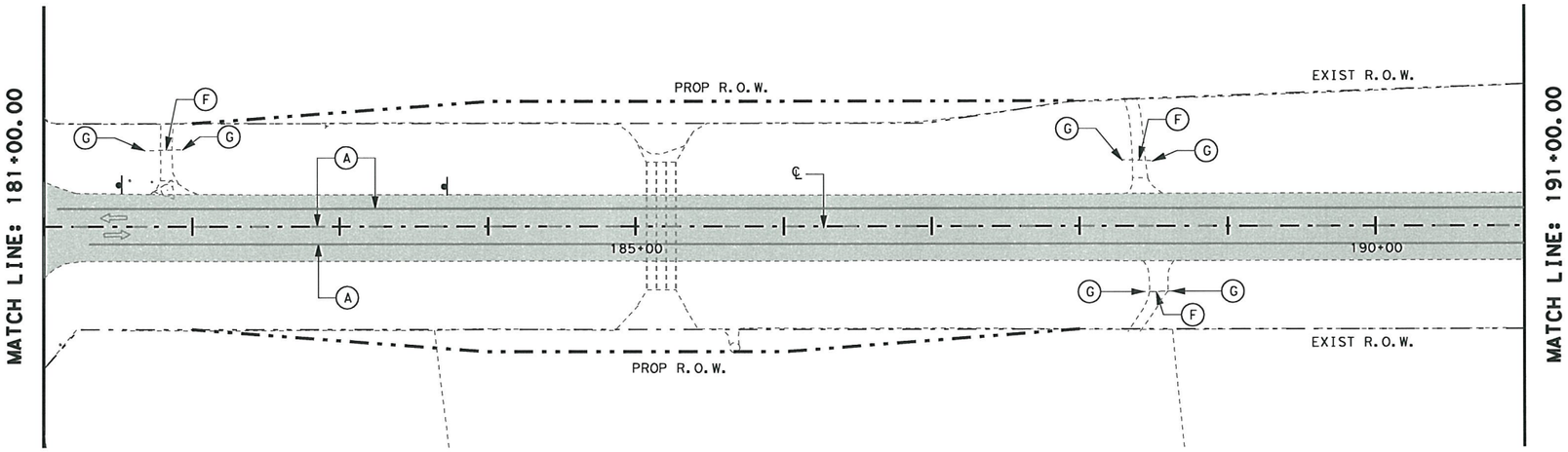

LEGEND

- TRAFFIC FLOW ARROW
- EXIST SIGN
- EXIST PAVE TO REMOVE
- EXIST DRWY TO REMOVE

NOTE: SEE CULVERT LAYOUT SHEETS FOR QUANTITIES OF STORM SEWER STRUCTURES REMOVAL.

NOTE: SEE SHEET #8 FOR EXISTING SOIL BORING DATA SHEET FOR DETAILS OF EXISTING PAVEMENT DEPTHS.

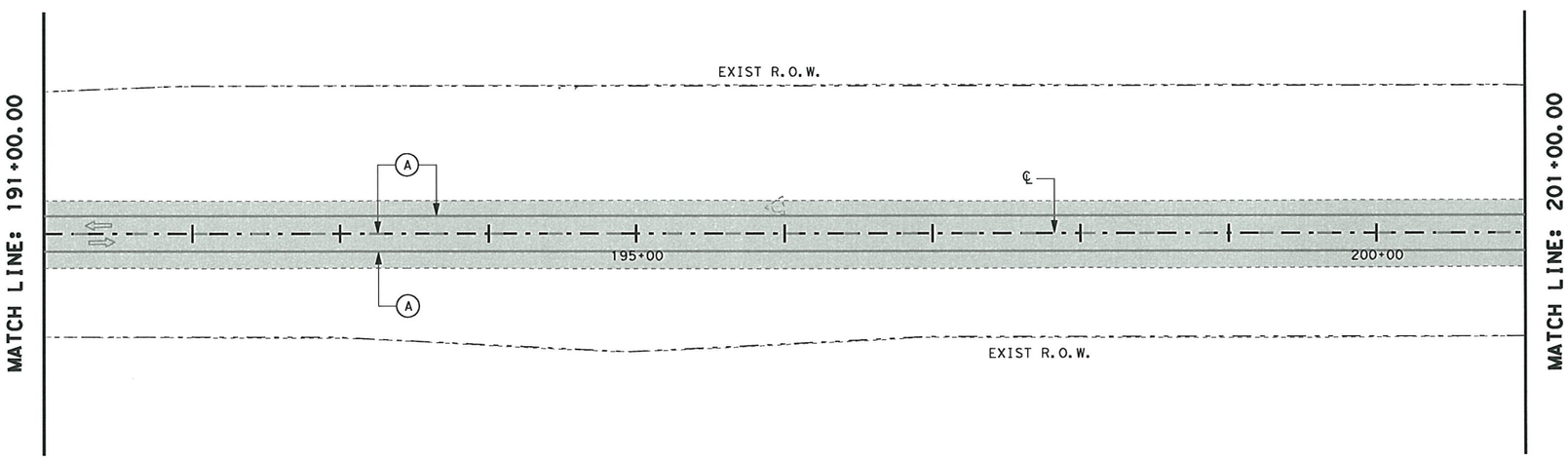

REMOVAL QUANTITIES (THIS SHEET)

(G)	(F)				(E)	(D)	(C)	(B)	(A)
496-2004	496-2007	104-2017	105-2014	644-2060	677-2007	677-2018	677-2008	677-2012	677-2001
REMOVE STR (SET)	REMOVE STR (PIPE)	REMOVE CONC (DRWY)	REMOV STAB BASE & ASPH PAV (7"-12")	REMOVE SM RD SN SUP & AM	ELIM EXT PAV MRK & MRKS (24")	ELIM EXT PAV MRK & MRKS(WORD)	ELIM EXT PAV MRK & MRKS(ARROW)	ELIM EXT PAV MRK & MRKS(ISLAND)	ELIM EXT PAV MRK & MRKS (4")
(EA)	(LF)	(SY)	(SY)	(EA)	(LF)	(EA)	(EA)	(SF)	(LF)
6	61.35	--	10131.07	2	--	--	--	--	4446

STATE OF TEXAS
HASSAN SAM MOGHADASSI
84231
LICENSED
PROFESSIONAL ENGINEER

H. Moghadassi , P.E. 7/12/11
Signature of Registrant & Date

021RM04.dgn

Texas Department of Transportation
© 2011

SH 289

FM 455 TO N BUS 289C

REMOVAL ITEMS

STA. 181+00 TO STA. 201+00

SCALE: 1"= 100' Sheet 4 of 10

DESIGN	FED.RD. DIV.NO.	STATE PROJECT NO.		HIGHWAY NO.
OE	6	SEE TITLE SHEET		SH 289
GRAPHICS	STATE	DISTRICT	COUNTY	SHEET NO.
OE	TEXAS	DALLAS	COLLIN	
CHECK	CONTROL	SECTION	JOB	108
SM	0091	03	20	
CHECK				

P-201107-01

7/11/2011
t:\dal\dgn*s\sh289\design\sheets\removal\021RM04.dgn
...\sheets\removal\021RM04.dgn

TXDOT
100.0000 ft / IN.

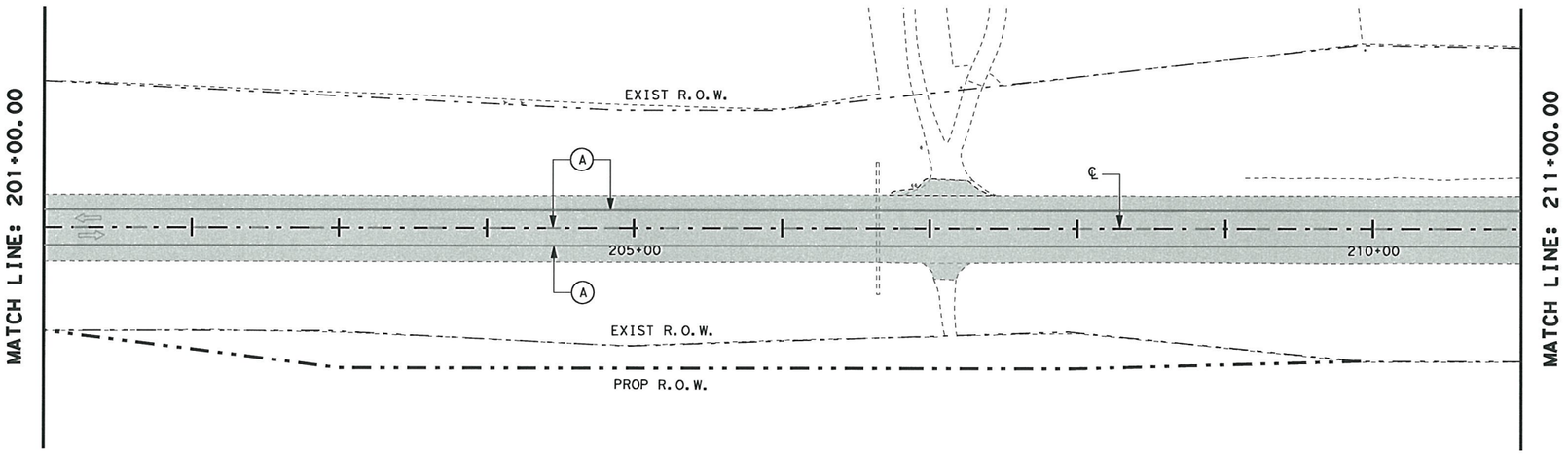

LEGEND

- TRAFFIC FLOW ARROW
- EXIST SIGN
- EXIST PAVE TO REMOVE
- EXIST DRWY TO REMOVE

NOTE: SEE CULVERT LAYOUT SHEETS FOR QUANTITIES OF STORM SEWER STRUCTURES REMOVAL.

NOTE: SEE SHEET #8 FOR EXISTING SOIL BORING DATA SHEET FOR DETAILS OF EXISTING PAVEMENT DEPTHS.

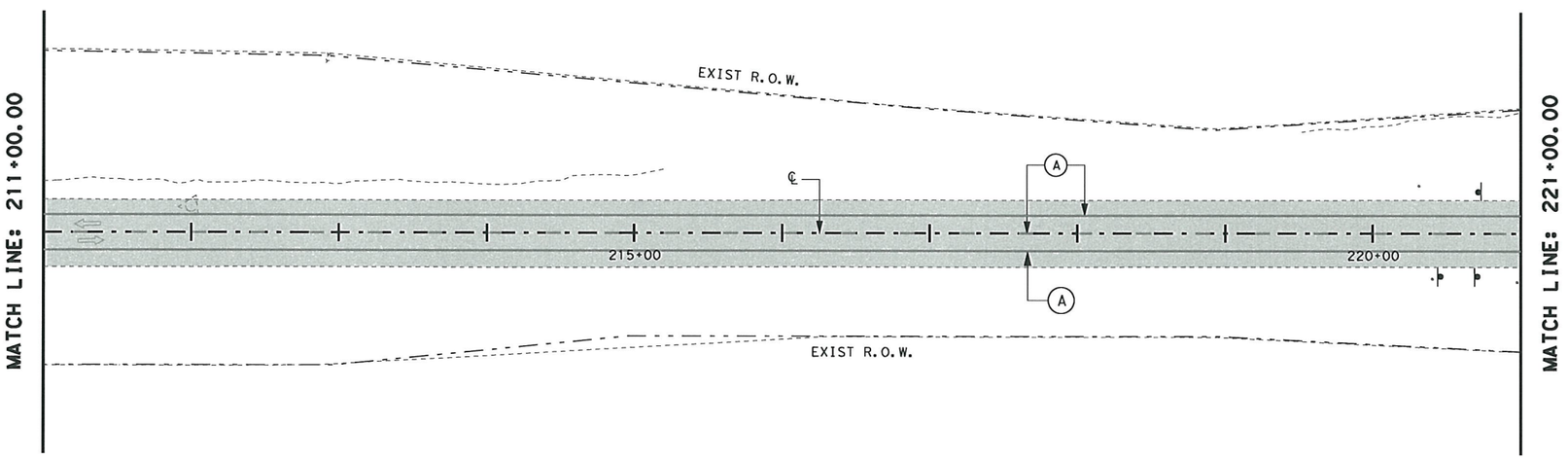

REMOVAL QUANTITIES (THIS SHEET)

(G) 496-2004	(F) 496-2007	104-2017	105-2014	644-2060	(E) 677-2007	(D) 677-2018	(C) 677-2008	(B) 677-2012	(A) 677-2001
REMOVE STR (SET)	REMOVE STR (PIPE)	REMOVE CONC (DRWY)	REMOV STAB BASE & ASPH PAV (7"-12")	REMOVE SM RD SN SUP & AM	ELIM EXT PAV MRK & MRKS (24")	ELIM EXT PAV MRK & MRKS (WORD)	ELIM EXT PAV MRK & MRKS (ARROW)	ELIM EXT PAV MRK & MRKS (ISLAND)	ELIM EXT PAV MRK & MRKS (4")
(EA)	(LF)	(SY)	(SY)	(EA)	(LF)	(EA)	(EA)	(SF)	(LF)
--	--	--	10156.57	3	--	--	--	--	4500

STATE OF TEXAS
HASSAN SAM MOGHADASSI
84231
LICENSED
PROFESSIONAL ENGINEER

H. Moghadassi , P.E. 7/12/11
Signature of Registrant & Date

021RM05.dgn

Texas Department of Transportation
© 2011

SH 289
FM 455 TO N BUS 289C
REMOVAL ITEMS
STA. 201+00 TO STA. 221+00

SCALE: 1"= 100' Sheet 5 of 10

DESIGN	FED.RD. DIV.NO.	STATE PROJECT NO.		HIGHWAY NO.
OE	6	SEE TITLE SHEET		SH 289
GRAPHICS	STATE	DISTRICT	COUNTY	SHEET NO.
OE	TEXAS	DALLAS	COLLIN	
CHECK	CONTROL	SECTION	JOB	
SM	0091	03	42	109
CHECK				

P 201107-01

7/11/2011
t:\dal\dgn*s\sh289\design\sheets\removal\021RM05.dgn
...\sheets\removal\021RM05.dgn

TXDOT
100.0000 ft / IN.

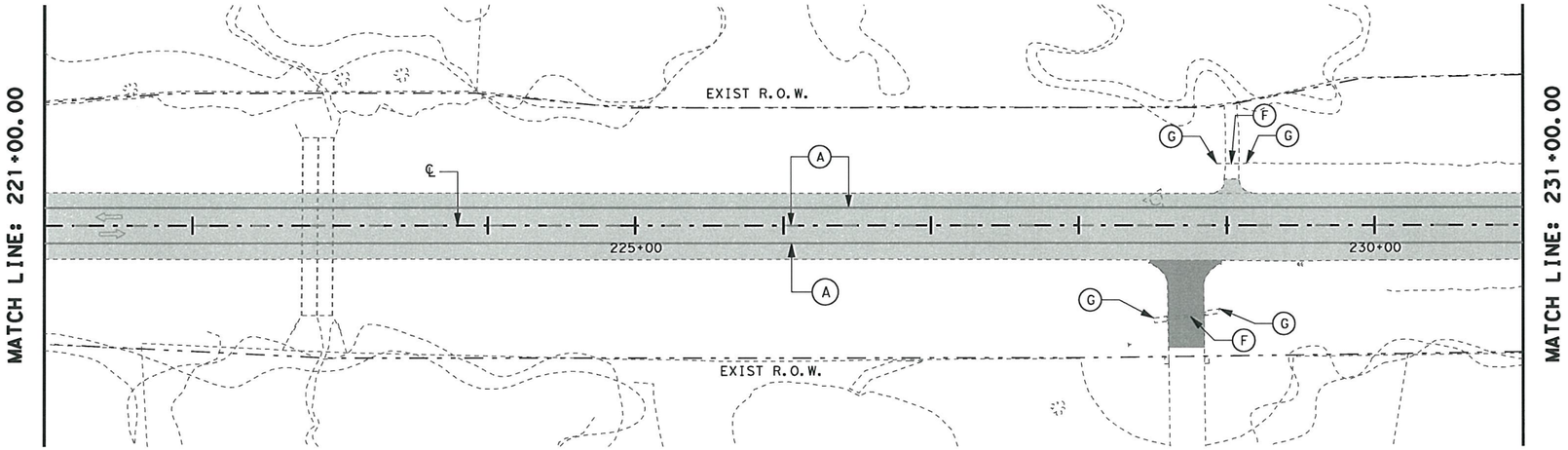

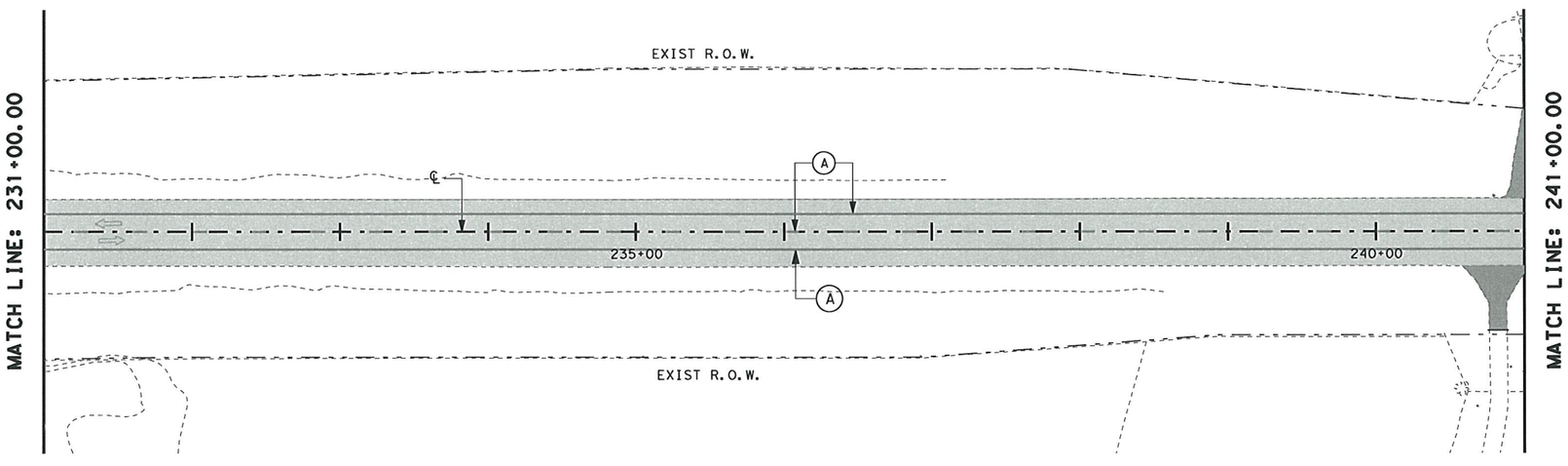

LEGEND

- TRAFFIC FLOW ARROW
- EXIST SIGN
- EXIST PAVE TO REMOVE
- EXIST DRWY TO REMOVE

NOTE: SEE CULVERT LAYOUT SHEETS FOR QUANTITIES OF STORM SEWER STRUCTURES REMOVAL.

NOTE: SEE SHEET #8 FOR EXISTING SOIL BORING DATA SHEET FOR DETAILS OF EXISTING PAVEMENT DEPTHS.

REMOVAL QUANTITIES (THIS SHEET)

(G)	(F)				(E)	(D)	(C)	(B)	(A)
496-2004	496-2007	104-2017	105-2014	644-2060	677-2007	677-2018	677-2008	677-2012	677-2001
REMOVE STR (SET)	REMOVE STR (PIPE)	REMOVE CONC (DRWY)	REMOV STAB BASE & ASPH PAV (7"-12")	REMOVE SM RD SN SUP & AM	ELIM EXT PAV MRK & MRKS (24")	ELIM EXT PAV MRK & MRKS(WORD)	ELIM EXT PAV MRK & MRKS(ARROW)	ELIM EXT PAV MRK & MRKS(ISLAND)	ELIM EXT PAV MRK & MRKS (4")
(EA)	(LF)	(SY)	(SY)	(EA)	(LF)	(EA)	(EA)	(SF)	(LF)
4	47.35	337.01	10084.70	--	--	--	--	--	4500

STATE OF TEXAS
HASSAN SAM MOGHADASSI
84231
LICENSED
PROFESSIONAL ENGINEER

H. Moghadassi, P.E. 7/11/11
Signature of Registrant & Date

021RM06.dgn

Texas Department of Transportation
© 2011

SH 289
FM 455 TO N BUS 289C
REMOVAL ITEMS
STA. 221+00 TO STA. 241+00

SCALE: 1"= 100' Sheet 6 of 10

DESIGN	FED.RD. DIV.NO.	STATE PROJECT NO.		HIGHWAY NO.
OE	6	SEE TITLE SHEET		SH 289
GRAPHICS	STATE	DISTRICT	COUNTY	SHEET NO.
OE	TEXAS	DALLAS	COLLIN	
CHECK	CONTROL	SECTION	JOB	
SM	0091	03	P-201107-01	110
CHECK				

7/11/2011
t:\dal\dgn*s\sh289\design\sheets\removal\021RM06.dgn
...\sheets\removal\021RM06.dgn

TXDOT
100.0000 ft / IN.

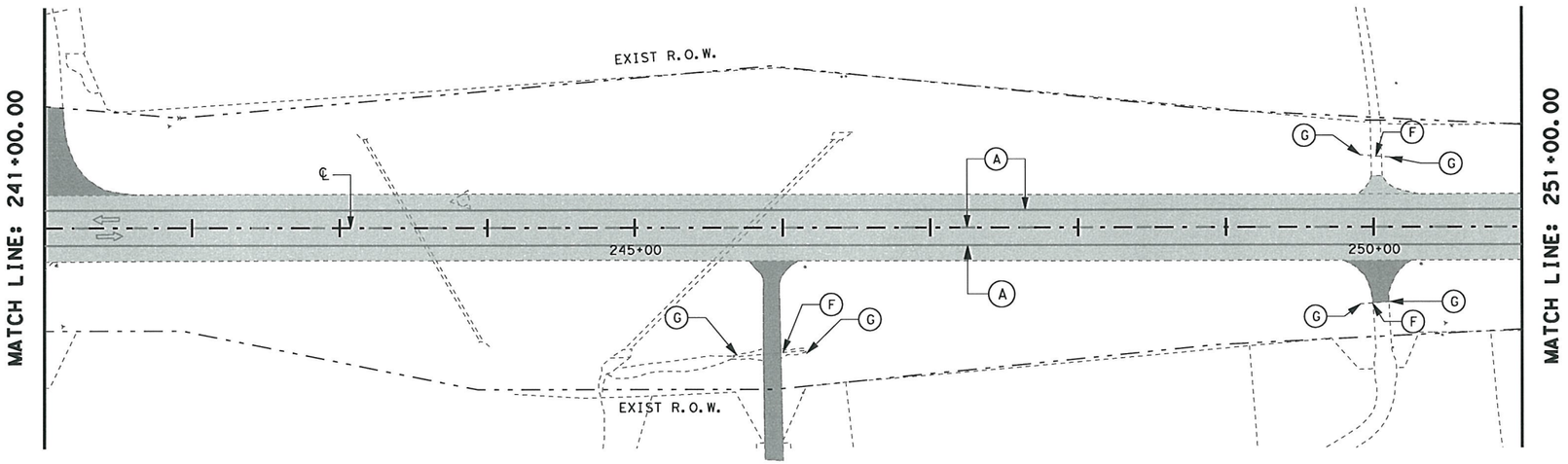

LEGEND

TRAFFIC FLOW ARROW

EXIST SIGN

EXIST PAVE TO REMOVE

EXIST DRWY TO REMOVE

NOTE: SEE CULVERT LAYOUT SHEETS FOR QUANTITIES OF STORM SEWER STRUCTURES REMOVAL.

NOTE: SEE SHEET #8 FOR EXISTING SOIL BORING DATA SHEET FOR DETAILS OF EXISTING PAVEMENT DEPTHS.

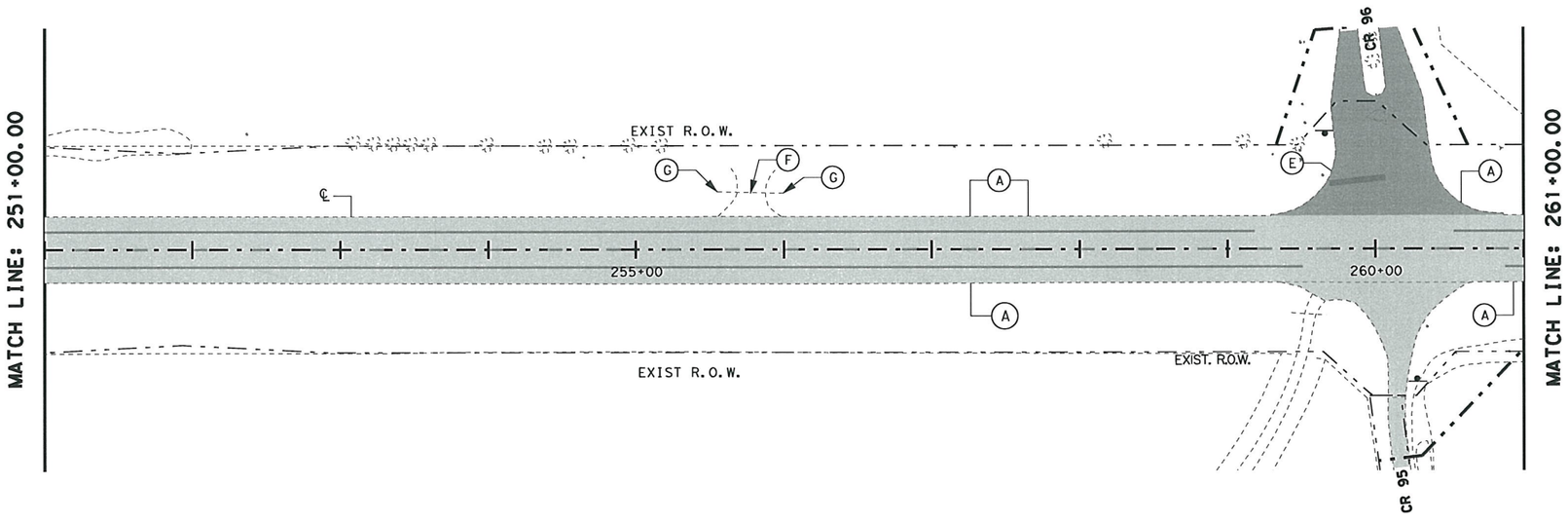

REMOVAL QUANTITIES (THIS SHEET)

(G)	(F)				(E)	(D)	(C)	(B)	(A)
496-2004	496-2007	104-2017	105-2014	644-2060	677-2007	677-2018	677-2008	677-2012	677-2001
REMOVE STR (SET)	REMOVE STR (PIPE)	REMOVE CONC (DRWY)	REMOV STAB BASE & ASPH PAV (7"-12")	REMOVE SM RD SN SUP & AM	ELIM EXT PAV MRK & MRKS (24")	ELIM EXT PAV MRK & MRKS(WORD)	ELIM EXT PAV MRK & MRKS(ARROW)	ELIM EXT PAV MRK & MRKS(ISLAND)	ELIM EXT PAV MRK & MRKS (4")
(EA)	(LF)	(SY)	(SY)	(EA)	(LF)	(EA)	(EA)	(SF)	(LF)
8	112.75	1117.56	10453.45	2	38	--	--	--	4228

STATE OF TEXAS
HASSAN SAM MOGHADASSI
84231
LICENSED
PROFESSIONAL ENGINEER

H. Moghadassi, P.E. 7/12/11
Signature of Registrant & Date

021RM07.dgn

Texas Department of Transportation
© 2011

SH 289
FM 455 TO N BUS 289C
REMOVAL ITEMS
STA. 241+00 TO STA. 261+00

SCALE: 1"= 100' Sheet 7 of 10

DESIGN	FED.RD. DIV.NO.	STATE PROJECT NO.		HIGHWAY NO.
OE	6	SEE TITLE SHEET		SH 289
GRAPHICS OE	STATE	DISTRICT	COUNTY	SHEET NO.
CHECK SM	TEXAS	DALLAS	COLLIN	111
CHECK	CONTROL	SECTION	JOB	
	0091	03	22	P-201107-01

7/11/2011
I:\dal\dgn\s\sh289\design\sheets\removal\021RM07.dgn
...\sheets\removal\021RM07.dgn

TXDOT
100.0000 ft / IN.

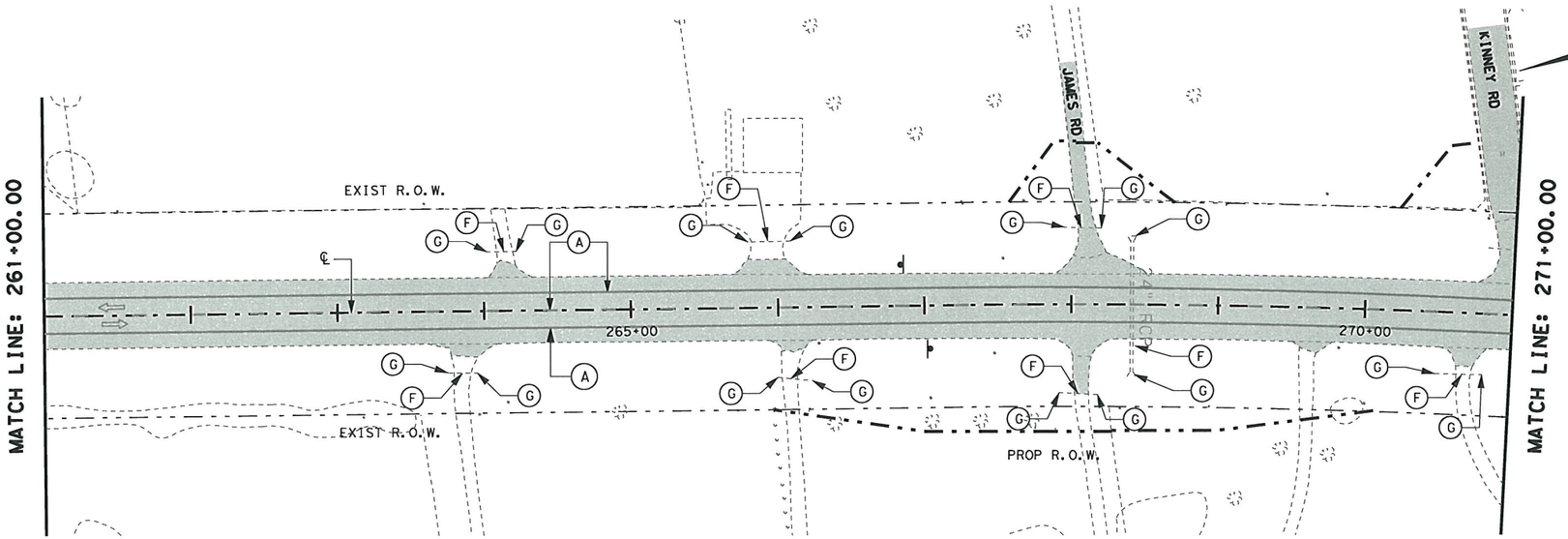

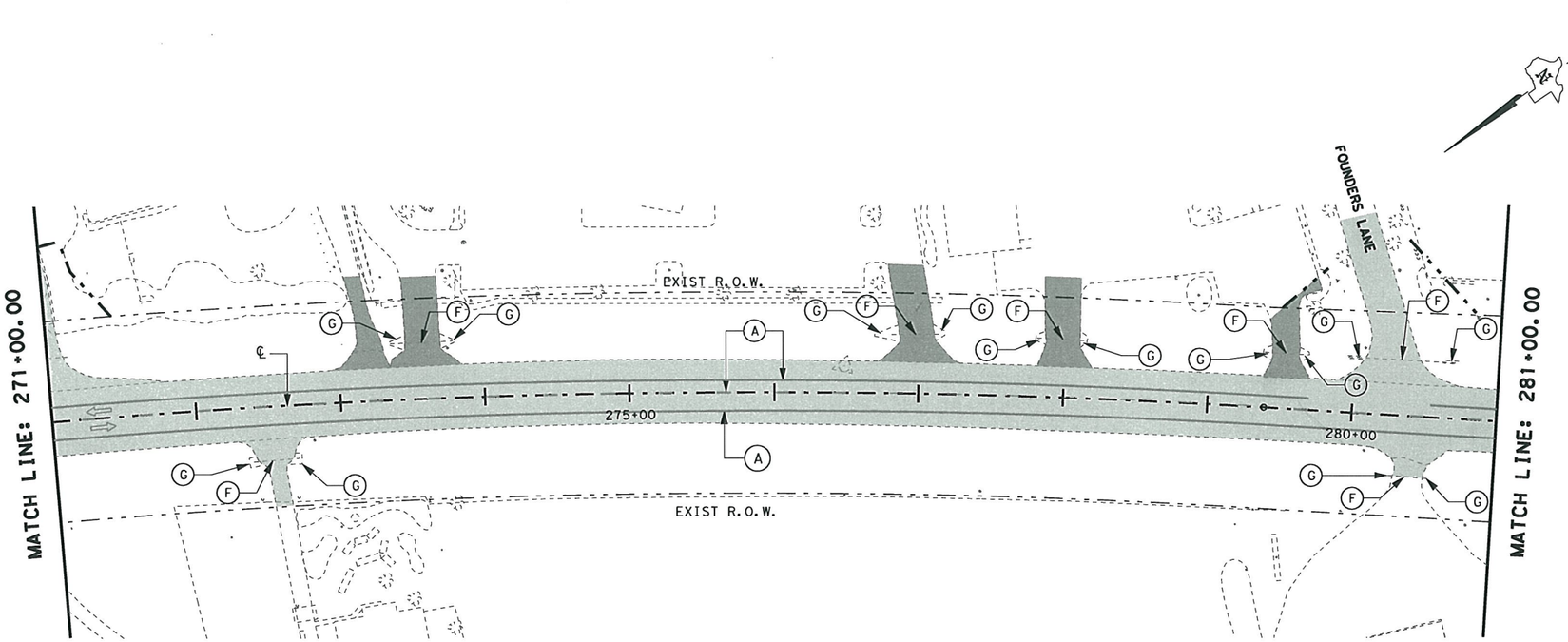

LEGEND

- TRAFFIC FLOW ARROW
- EXIST SIGN
- EXIST PAVE TO REMOVE
- EXIST DRWY TO REMOVE

NOTE: SEE CULVERT LAYOUT SHEETS FOR QUANTITIES OF STORM SEWER STRUCTURES REMOVAL.

NOTE: SEE SHEET #8 FOR EXISTING SOIL BORING DATA SHEET FOR DETAILS OF EXISTING PAVEMENT DEPTHS.

REMOVAL QUANTITIES (THIS SHEET)

(G) 496-2004	(F) 496-2007	104-2017	105-2014	644-2060	(E) 677-2007	(D) 677-2018	(C) 677-2008	(B) 677-2012	(A) 677-2001
REMOVE STR (SET)	REMOVE STR (PIPE)	REMOVE CONC (DRWY)	REMOV STAB BASE & ASPH PAV (7"-12")	REMOVE SM RD SN SUP & AM	ELIM EXT PAV MRK & MRKS (24")	ELIM EXT PAV MRK & MRKS(WORD)	ELIM EXT PAV MRK & MRKS(ARROW)	ELIM EXT PAV MRK & MRKS(ISLAND)	ELIM EXT PAV MRK & MRKS (4")
(EA)	(LF)	(SY)	(SY)	(EA)	(LF)	(EA)	(EA)	(SF)	(LF)
30	476.6	816.51	11513.57	2	--	--	--	--	4415

STATE OF TEXAS
HASSAN SAM MOGHADASSI
84231
LICENSED PROFESSIONAL ENGINEER

H. Moghadassi , P.E. 7/12/11
Signature of Registrant & Date

021RM08.dgn

Texas Department of Transportation
© 2011

SH 289
FM 455 TO N BUS 289C
REMOVAL ITEMS
STA. 261+00 TO STA. 281+00

SCALE: 1"= 100' Sheet 8 of 10

DESIGN	FED.RD. DIV.NO.	STATE PROJECT NO.			HIGHWAY NO.
OE	6	SEE TITLE SHEET			SH 289
GRAPHICS OE	STATE	DISTRICT	COUNTY		SHEET NO.
CHECK SM	TEXAS	DALLAS	COLLIN		112
CHECK	CONTROL	SECTION	JOB		
	0091	03	201		

P-201107-01

...\sheets\removal\021RM08.dgn

7/11/2011
I:\dal\dgn\S\sh289\design\sheets\removal\021RM08.dgn

TXDOT
100.0000 ft / IN.

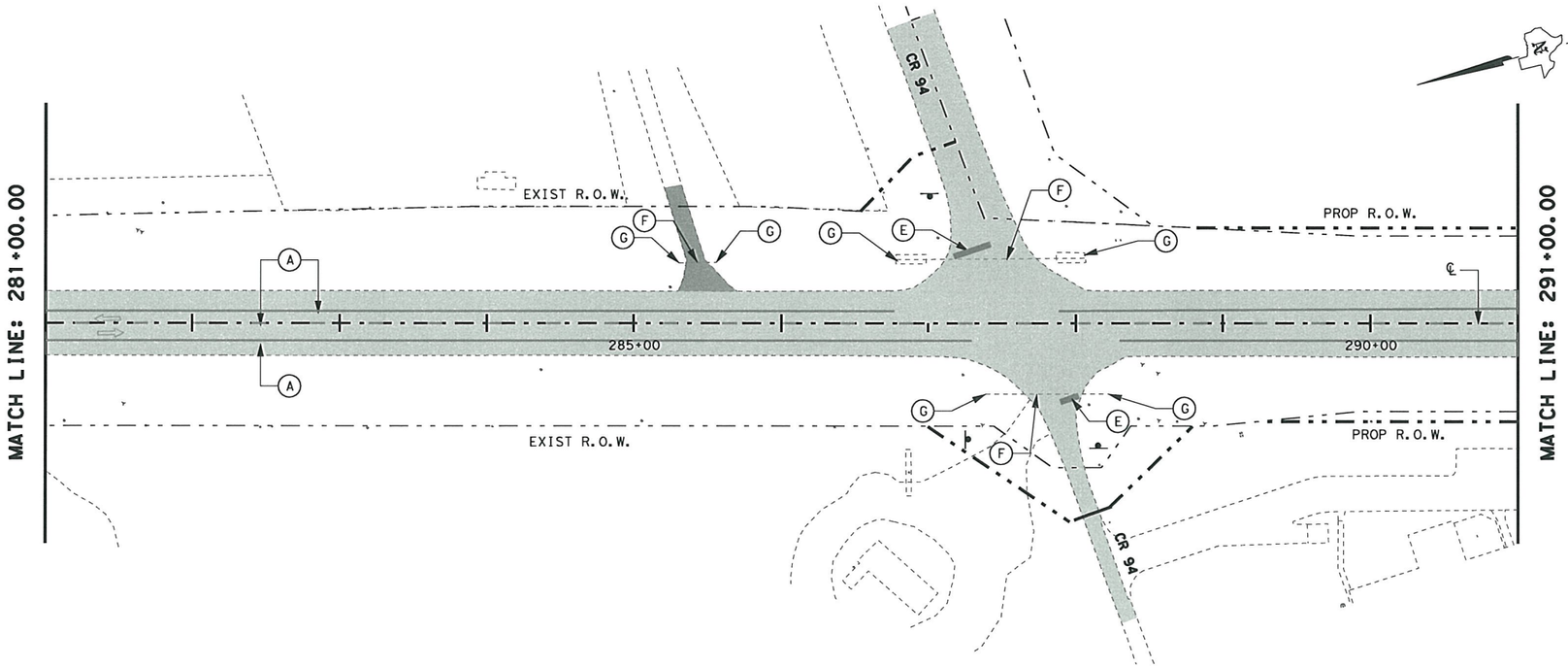

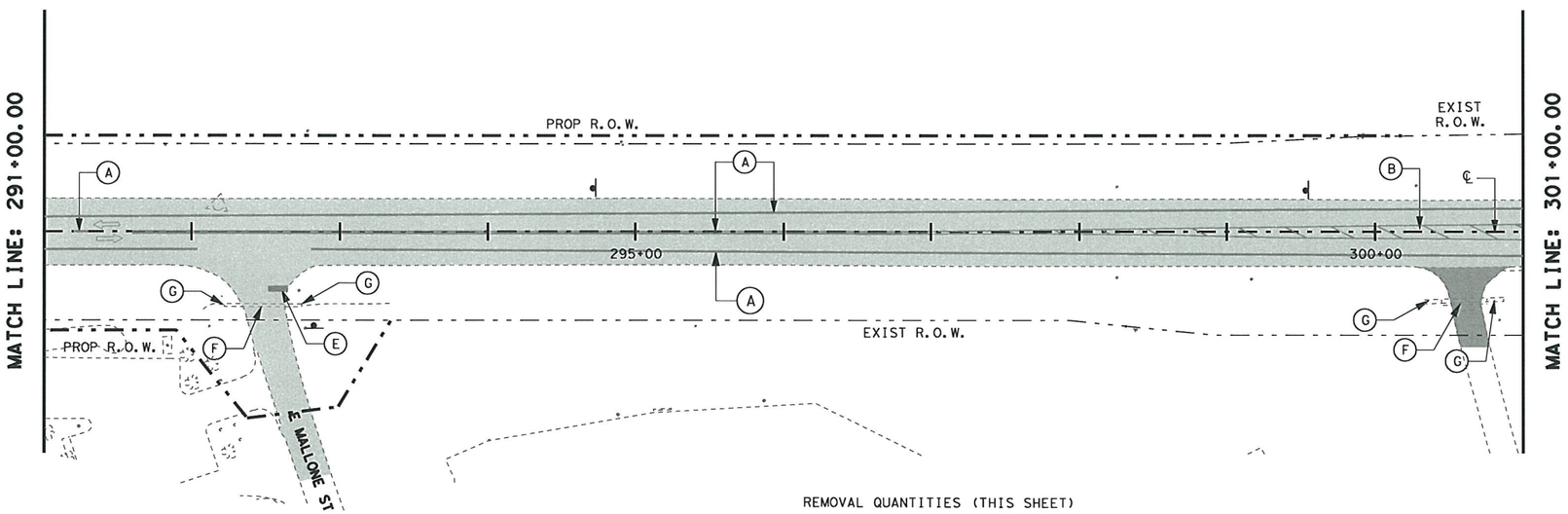

LEGEND

- TRAFFIC FLOW ARROW
- EXIST SIGN
- EXIST PAVE TO REMOVE
- EXIST DRWY TO REMOVE

NOTE: SEE CULVERT LAYOUT SHEETS FOR QUANTITIES OF STORM SEWER STRUCTURES REMOVAL.

NOTE: SEE SHEET #8 FOR EXISTING SOIL BORING DATA SHEET FOR DETAILS OF EXISTING PAVEMENT DEPTHS.

REMOVAL QUANTITIES (THIS SHEET)

(G)	(F)				(E)	(D)	(C)	(B)	(A)
496-2004	496-2007	104-2017	105-2014	644-2060	677-2007	677-2018	677-2008	677-2012	677-2001
REMOVE STR (SET)	REMOVE STR (PIPE)	REMOVE CONC (DRWY)	REMOV STAB BASE & ASPH PAV (7"-12")	REMOVE SM RD SN SUP & AM	ELIM EXT PAV MRK & MRKS (24")	ELIM EXT PAV MRK & MRKS(WORD)	ELIM EXT PAV MRK & MRKS(ARROW)	ELIM EXT PAV MRK & MRKS(ISLAND)	ELIM EXT PAV MRK & MRKS (4")
(EA)	(LF)	(SY)	(SY)	(EA)	(LF)	(EA)	(EA)	(SF)	(LF)
10	278.67	277.67	11795.19	6	52	--	--	4405	5051

STATE OF TEXAS
HASSAN SAM MOGHADASSI
84231
LICENSED
PROFESSIONAL ENGINEER

H. Moghadassi , P.E. 7/12/11
Signature of Registrant & Date

021RM09.dgn

Texas Department of Transportation
© 2011

SH 289
FM 455 TO N BUS 289C
REMOVAL ITEMS
STA. 281+00 TO STA. 301+00

SCALE: 1"= 100' Sheet 9 of 10

DESIGN	FED.RD. DIV.NO.	STATE PROJECT NO.		HIGHWAY NO.
OE	6	SEE TITLE SHEET		SH 289
GRAPHICS OE	STATE	DISTRICT	COUNTY	SHEET NO.
CHECK SM	TEXAS	DALLAS	COLLIN	113
CHECK	CONTROL	SECTION	JOB	
	0091	03	201	

P-201107-01

7/11/2011
t:\dal\dgn*s\sh289\design\sheets\removal\021RM09.dgn
...\sheets\removal\021RM09.dgn

TXDOT
100.0000 ft / IN.

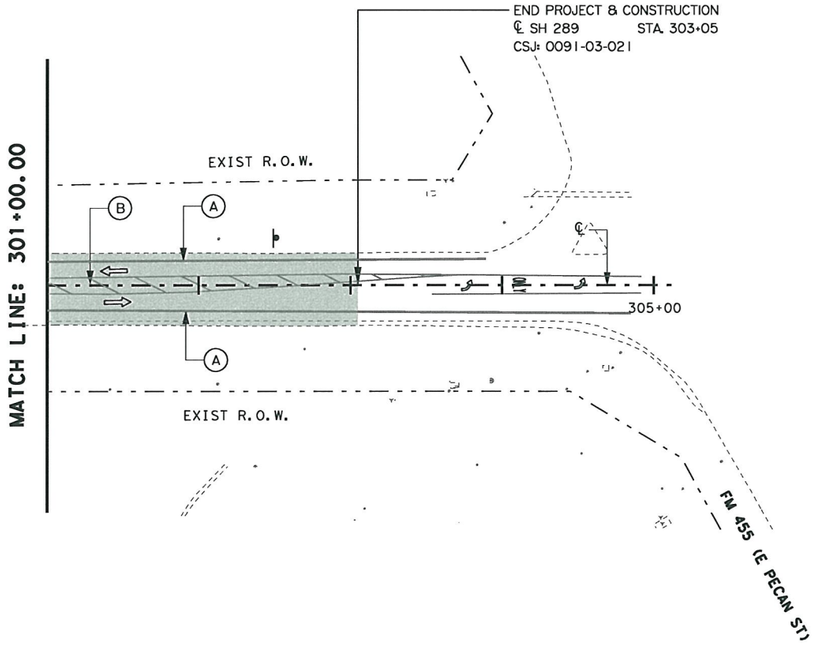

LEGEND

TRAFFIC FLOW ARROW

EXIST SIGN

EXIST PAVE TO REMOVE

EXIST DRWY TO REMOVE

NOTE: SEE CULVERT LAYOUT SHEETS FOR QUANTITIES OF STORM SEWER STRUCTURES REMOVAL.

NOTE: SEE SHEET #8 FOR EXISTING SOIL BORING DATA SHEET FOR DETAILS OF EXISTING PAVEMENT DEPTHS.

REMOVAL QUANTITIES (THIS SHEET)

G	F				E	D	C	B	A
496-2004	496-2007	104-2017	105-2014	644-2060	677-2007	677-2018	677-2008	677-2012	677-2001
REMOVE STR (SET)	REMOVE STR (PIPE)	REMOVE CONC (DRWY)	REMOV STAB BASE & ASPH PAV (7"-12")	REMOVE SM RD SN SUP & AM	ELIM EXT PAV MRK & MRKS (24")	ELIM EXT PAV MRK & MRKS(WORD)	ELIM EXT PAV MRK & MRKS(ARROW)	ELIM EXT PAV MRK & MRKS(ISLAND)	ELIM EXT PAV MRK & MRKS (4")
(EA)	(LF)	(SY)	(SY)	(EA)	(LF)	(EA)	(EA)	(SF)	(LF)
--	--	--	1091.65	1	--	--	--	--	410

STATE OF TEXAS
HASSAN SAM MOGHADASSI
84231
LICENSED
PROFESSIONAL ENGINEER

H. Moghadassi, P.E. 7/12/11
Signature of Registrant & Date

021RM10.dgn

Texas Department of Transportation
© 2011

SH 289

FM 455 TO N BUS 289C

REMOVAL ITEMS

STA. 301+00 TO END CONSTRUCTION

SCALE: 1"= 100' Sheet 10 of 10

DESIGN	FED.RD. DIV.NO.	STATE PROJECT NO.		HIGHWAY NO.
OE	6	SEE TITLE SHEET		SH 289
GRAPHICS OE	STATE	DISTRICT	COUNTY	SHEET NO.
CHECK SM	TEXAS	DALLAS	COLLIN	114
CHECK	CONTROL	SECTION	JOB	
	0091	03	201107-01	

P-201107-01

7/11/2011
t:\dal\dgn*s\sh289\design\sheets\removal\021RM10.dgn
...\sheets\removal\021RM10.dgn

TXDOT
100.0000 ft / IN.

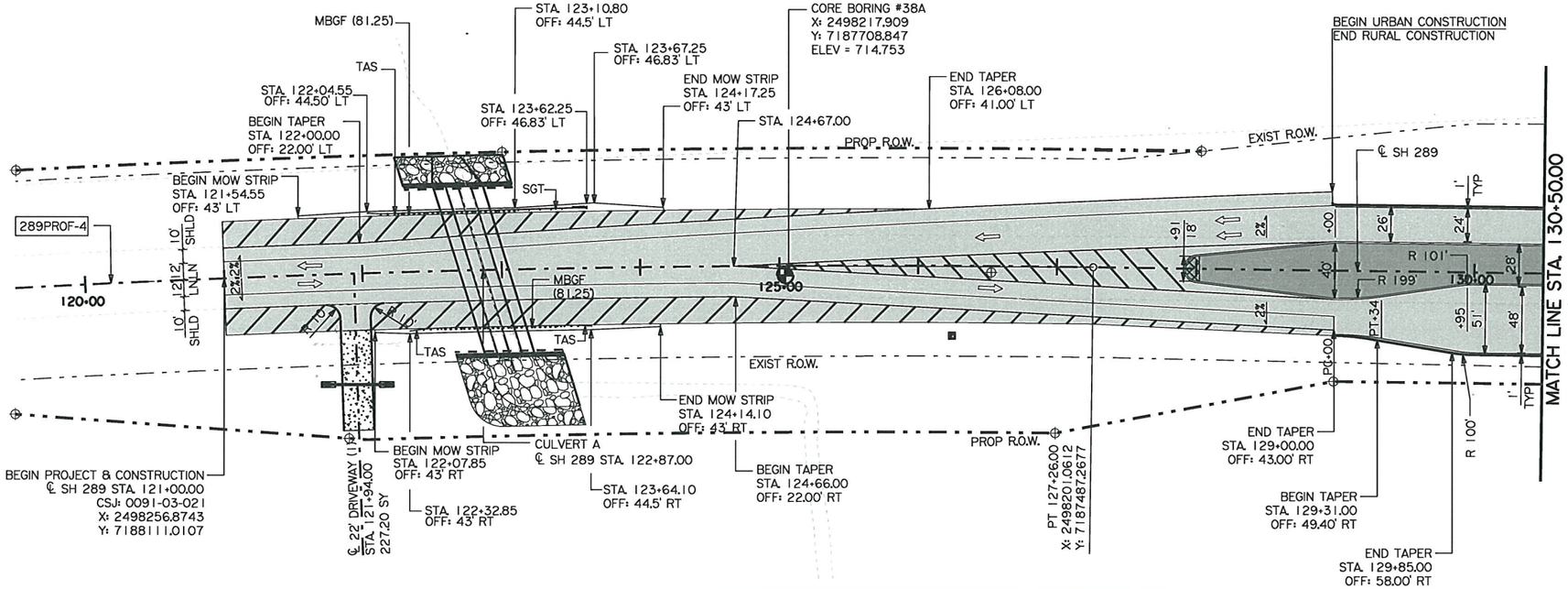

0 50 100
SCALE IN FEET

LEGEND

- (XXXX) POINT NUMBERS
- XXXX CURVE NUMBERS
- ASPHALT
- CONCRETE DRIVEWAY
- SEEDING AND FERTILIZER
- CONCRETE RDWY
- PERMANENT STRIPING
- CONCRETE MEDIAN
- RIGHT OF WAY MARKER

NOTE:
SEE MISCELLANEOUS DETAIL SHEET
FOR INTERSECTION TAPER DETAIL.

289PROF-4
HORIZ. CURVE DATA

PI STATION	= 120+41.90
DELTA	= 6° 51' 08.29" (RT)
DEGREE OF CURVE	= 0° 30' 00.00"
TANGENT	= 686.05
LENGTH	= 1,370.46
RADIUS	= 11,459.16
PC STATION	= 113+55.85
PT STATION	= 127+26.31

ITEM NO.	DESCRIPTION	UNIT	SHEET TOTAL
164-2039	DRILL SEEDING (PERM) (URBAN) (CLAY)	SY	11656
168-2001	VEGETATIVE WATERING	MG	337.2
247-2056	FL BS (CMP IN PLC) (TY D GR4)	CY	1987.2
310-2005	PRIME COAT (MC - 30 OR AE - P)	GAL	1807
340-2011	D - GR HMA (METH) TY - B PG 64 22	TON	1928
360-2001	CONC PVMT (CONT REINF - CRCP) (8")	SY	8493
360-2018	CURB (TY II)	LF	831
530-2038	DRIVEWAYS (CONC) (HES)	SY	227.2
536-2002	CONC MEDIAN	SY	14
538-2001	RIGHT OF WAY MARKERS	EA	7

ITEM NO.	DESCRIPTION	UNIT	SHEET TOTAL
540-2001	MTL W - BEAM GD FEN (TIM POST)	LF	162.5
540-2005	TERMINAL ANCHOR SECTION	EA	3
544-2001	GUARDRAIL END TREATMENT (INSTALL)	EA	1
432-2039	RIPRAP (MOW STRIP) (4 IN)	CY	19.54

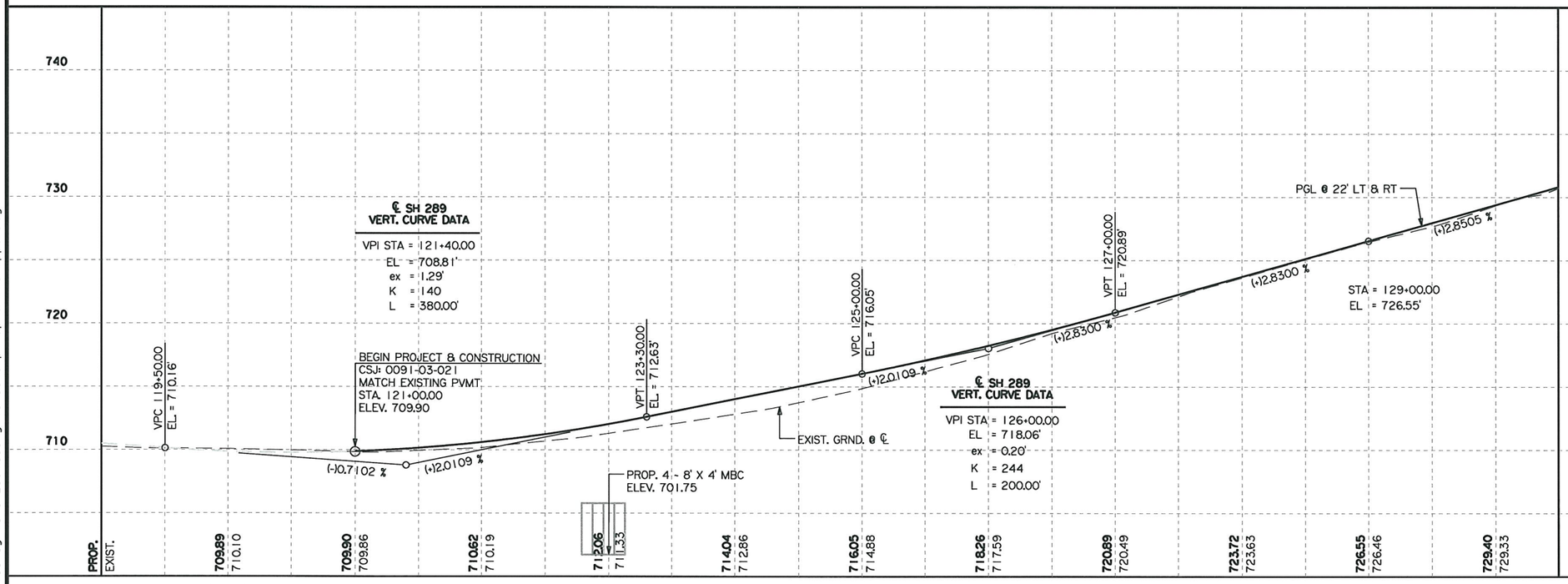

STATE OF TEXAS
HASSAN SAM MOGHADASSI
84231
LICENSED
PROFESSIONAL ENGINEER

H. Moghadassi, P.E. 7/12/11
Signature of Registrant & Date

new*pp01.dgn

Texas Department of Transportation
© 2011

SH 289
FM 455 TO N BUS 289C
PLAN PROFILE
BEGIN CONSTRUCTION TO STA. 130+50

SCALE: HORIZ: 1"=100'
VERT: 1"=10'

SHEET 1 OF 18

DESIGN	FED. RD. DIV. NO.	STATE PROJECT NO.		HIGHWAY NO.
SHM	6	SEE TITLE SHEET		SH 289
GRAPHICS OE	STATE	DISTRICT	COUNTY	SHEET NO.
CHECK SM	TEXAS	DALLAS	COLLIN	115
CHECK	CONTROL	SECTION	JOB	
	0091	03	P-201107-01	

7/11/2011
...\sheets\pln&prof\new*pp01.dgn

TXDOT
100.0000 ft / IN.

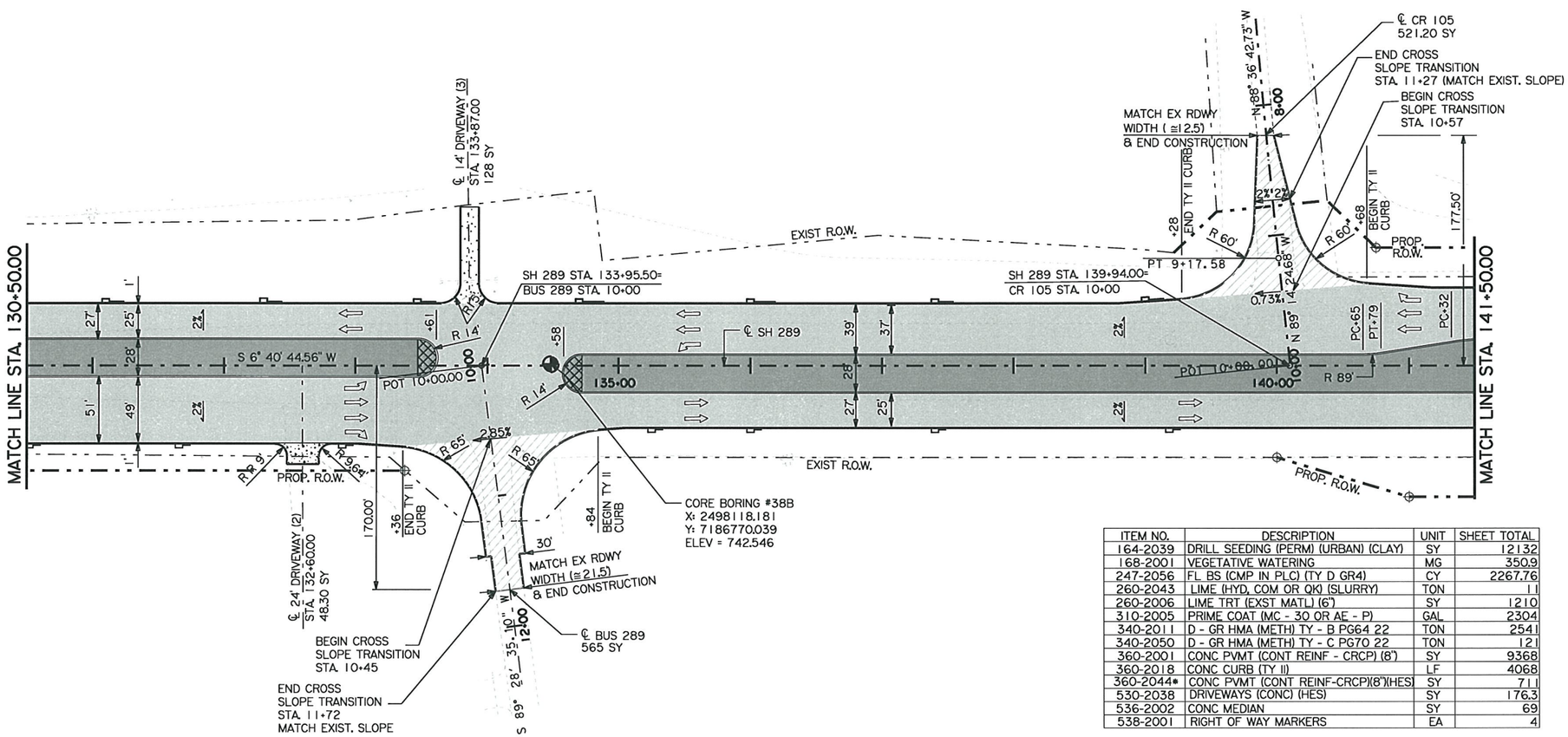

LEGEND

- (XXXX) POINT NUMBERS
- XXXX CURVE NUMBERS
- ASPHALT
- CONCRETE DRIVEWAY
- SEEDING AND FERTILIZER
- CONCRETE RDWY
- CONCRETE MEDIAN
- ⊕ RIGHT OF WAY MARKER

NOTE:
SEE MISCELLANEOUS DETAIL SHEET
FOR INTERSECTION TAPER DETAIL.

- USE 2(40'x40') HES CONC (BUS 289 CONSTRUCTION)
- USE 2(40'x40') HES CONC (CR 105 CONSTRUCTION)
- SEE TCP DETAIL INTERSECTIONS

CR 105
HORIZ. CURVE DATA

PI STATION	= 8+07.92
DELTA	= 1° 15' 23.90" (LT)
DEGREE OF CURVE	= 0° 34' 22.65"
TANGENT	= 109.67
LENGTH	= 219.32
RADIUS	= 10,000.00
PC STATION	= 6+98.25
PT STATION	= 9+17.58

ITEM NO.	DESCRIPTION	UNIT	SHEET TOTAL
164-2039	DRILL SEEDING (PERM) (URBAN) (CLAY)	SY	12132
168-2001	VEGETATIVE WATERING	MG	350.9
247-2056	FL BS (CMP IN PLC) (TY D GR4)	CY	2267.76
260-2043	LIME (HYD, COM OR QK) (SLURRY)	TON	11
260-2006	LIME TRT (EXST MATL) (6")	SY	1210
310-2005	PRIME COAT (MC - 30 OR AE - P)	GAL	2304
340-2011	D - GR HMA (METH) TY - B PG64 22	TON	2541
340-2050	D - GR HMA (METH) TY - C PG70 22	TON	121
360-2001	CONC PVMT (CONT REINF - CRCP) (8")	SY	9368
360-2018	CONC CURB (TY II)	LF	4068
360-2044*	CONC PVMT (CONT REINF-CRCP)(8")(HES)	SY	711
530-2038	DRIVEWAYS (CONC) (HES)	SY	176.3
536-2002	CONC MEDIAN	SY	69
538-2001	RIGHT OF WAY MARKERS	EA	4

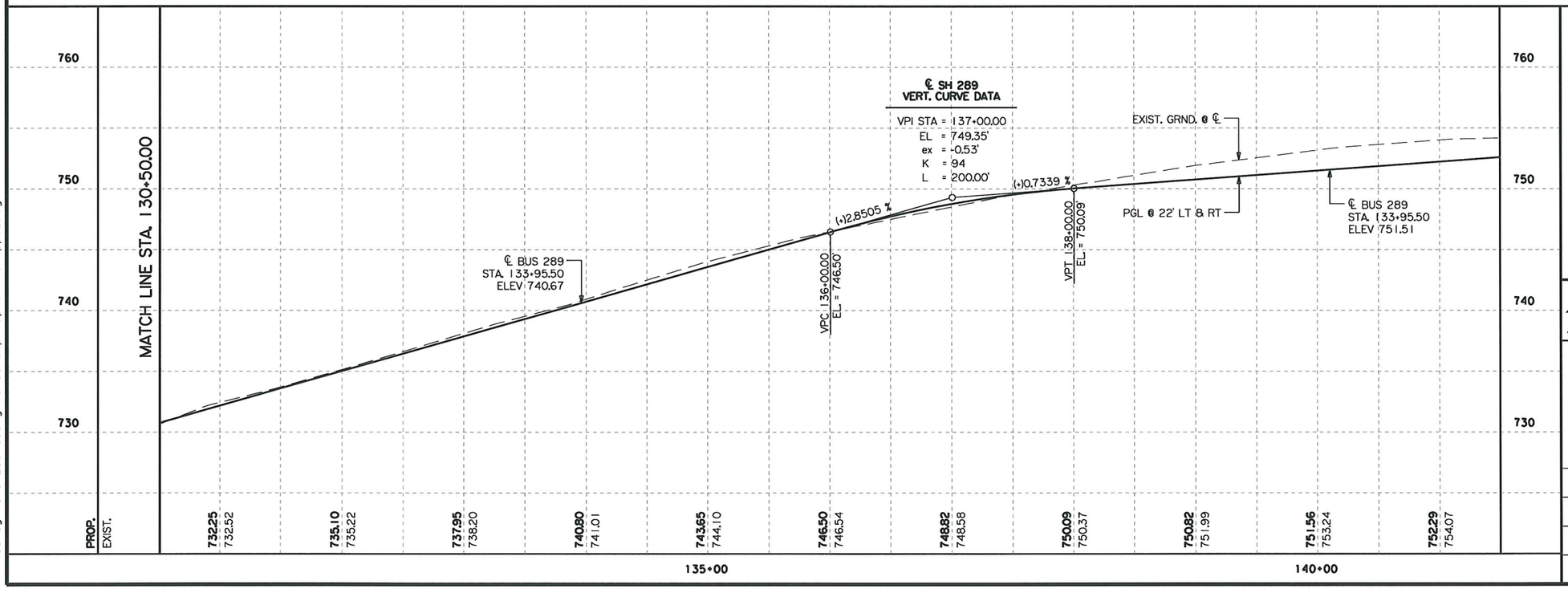

STATE OF TEXAS
HASSAN SAM MOGHADASSI
84231
LICENSED
PROFESSIONAL ENGINEER

H. Moghadassi, P.E. 7/12/11
Signature of Registrant & Date

new*pp02.dgn

Texas Department of Transportation
© 2011

SH 289
FM 455 TO N BUS 289C
PLAN PROFILE
STA. 130+50 TO STA. 141+50

SCALE: HORIZ: 1"=100'
VERT: 1"=10'

SHEET 2 OF 18

DESIGN	FED. RD. DIV. NO.	STATE PROJECT NO.		HIGHWAY NO.
SHM	6	SEE TITLE SHEET		SH 289
GRAPHICS	STATE	DISTRICT	COUNTY	SHEET NO.
OE	TEXAS	DALLAS	COLLIN	
CHECK	CONTROL	SECTION	JOB	
SM	0091	03	P-201107-01	116
CHECK				

7/11/2011
...\sheets\pln&prof\new*pp02.dgn

$USER$
$SCALE$

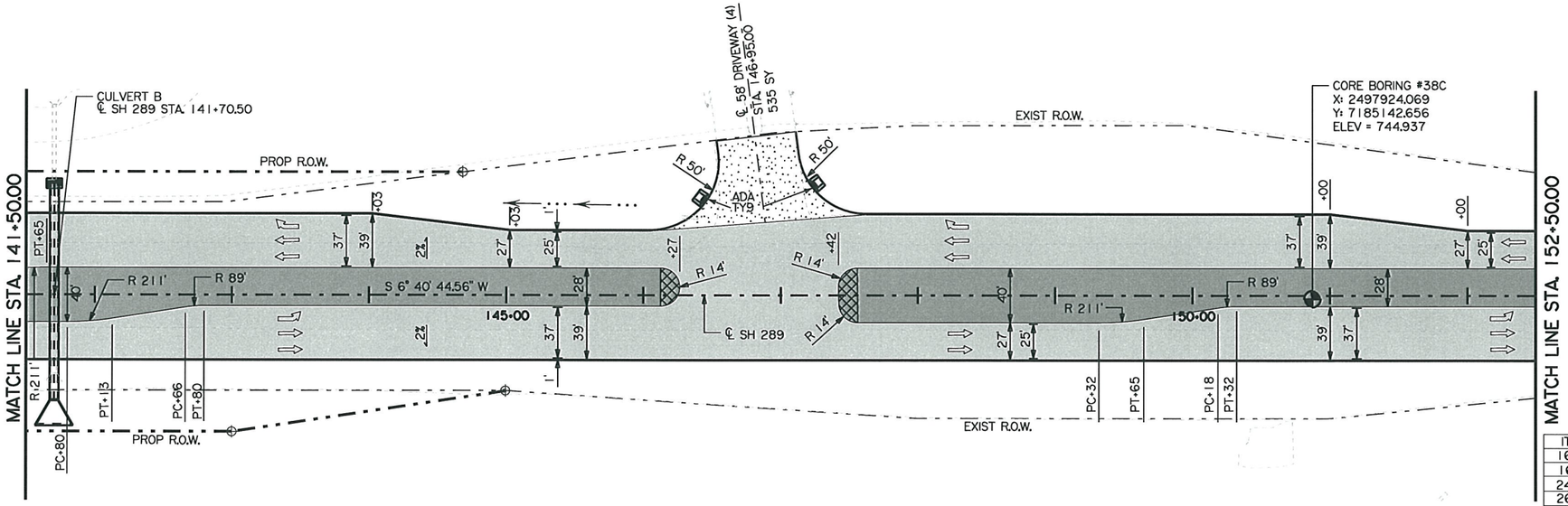

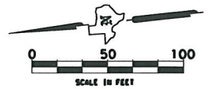

LEGEND

- (XXXX) POINT NUMBERS
- XXXX CURVE NUMBERS
- ASPHALT
- CONCRETE DRIVEWAY
- SEEDING AND FERTILIZER
- CONCRETE RDWY
- CONCRETE MEDIAN
- ⊕ RIGHT OF WAY MARKER

NOTE:
SEE MISCELLANEOUS DETAIL SHEET
FOR INTERSECTION TAPER DETAIL.

ITEM NO.	DESCRIPTION	UNIT	SHEET TOTAL
164-2039	DRILL SEEDING (PERM) (URBAN) (CLAY)	SY	13572
168-2001	VEGETATIVE WATERING	MG	392.6
247-2050	FL BS (CMP IN PLC) (TY D G4)	CY	708.62
260-2043	LIME (HYD, COM OR QK) (SLURRY)	TON	104
260-2027	LIME TRT (EXST MATL) (8")	SY	6910
310-2005	PRIME COAT (MC - 30 OR AE - P)	GAL	2026
340-2011	D - GR HMA (METH) TY - B PG64 22	TON	2126
360-2001	CONC PVMT (CONT REINF - CRCP) (8")	SY	9196
360-2018	CURB (TY II)	LF	3759
530-2038	DRIVEWAYS (CONC) (HES)	SY	535
531-2012	CURB RAMPS (TY 9)	EA	2
536-2002	CONC MEDIAN	SY	80
538-2001	RIGHT OF WAY MARKERS	EA	3

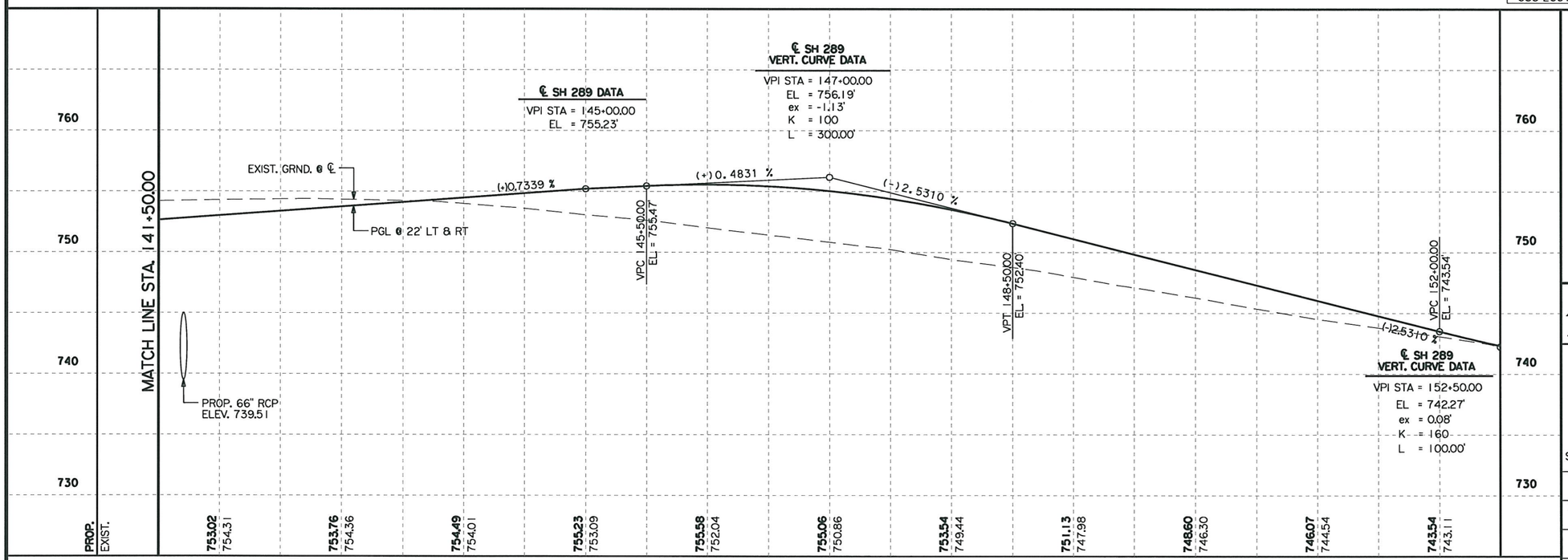

HASSAN SAM MOGHADASSI
84231
LICENSED
PROFESSIONAL ENGINEER
STATE OF TEXAS

H. Moghadassi, P.E. 7/12/11
Signature of Registrant & Date

$FILES$

Texas Department of Transportation
© 2011

SH 289
FM 455 TO N BUS 289C
PLAN PROFILE
STA. 141+50 TO STA. 152+50

SCALE: HORIZ: 1"=100'
VERT: 1"=10'

SHEET 3 OF 18

DESIGN	FED. RD. DIV. NO.	STATE PROJECT NO.		HIGHWAY NO.
SHM	6	SEE TITLE SHEET		SH 289
GRAPHICS OE	STATE	DISTRICT	COUNTY	SHEET NO.
CHECK SM	TEXAS	DALLAS	COLLIN	
CHECK	CONTROL	SECTION	JOB	117
	0091	03	020	

P-201107-01

$FILEABBREV$

$DATE$
$FILE$

$USER$
$SCALE$

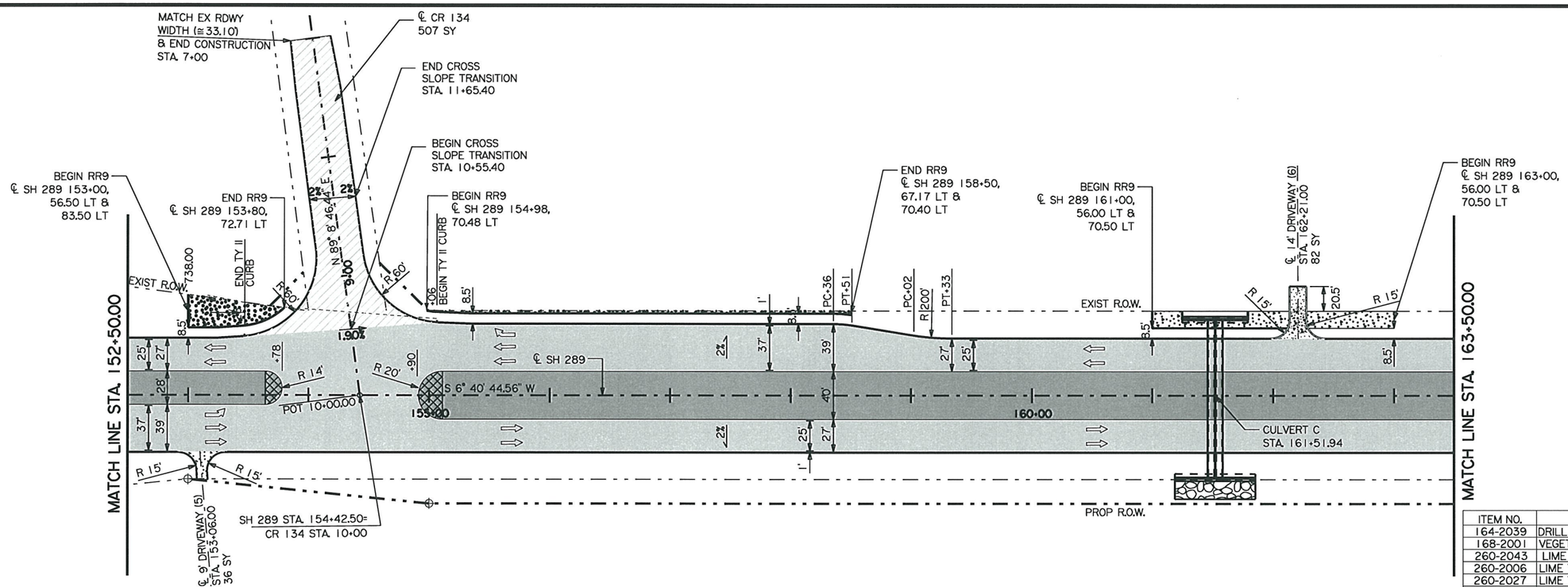

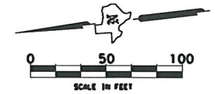

LEGEND

- XXXX — POINT NUMBERS
- XXXX — CURVE NUMBERS
- ASPHALT
- CONCRETE DRIVEWAY
- SEEDING AND FERTILIZER
- CONCRETE RDWY
- CONCRETE MEDIAN
- CONCRETE RIPRAP
- RIGHT OF WAY MARKER

NOTE:
SEE MISCELLANEOUS DETAIL SHEET FOR INTERSECTION TAPER DETAIL.

- USE 2(40'x40') HEC CONC (CR 134 CONSTRUCTION)
- SEE TCP DETAIL INTERSECTIONS

ITEM NO.	DESCRIPTION	UNIT	SHEET TOTAL
164-2039	DRILL SEEDING (PERM) (URBAN) (CLAY)	SY	10865
168-2001	VEGETATIVE WATERING	MG	314.3
260-2043	LIME (HYD, COM OR QK) (SLURRY)	TON	149
260-2006	LIME TRT (EXST MATL) (6")	SY	1361
260-2027	LIME TRT (EXST MATL) (8")	SY	9149
340-2011	D - GR HMA (METH) TY - B PG64 22	TON	2335
340-2050	D - GR HMA (METH) TY - C PG70 22	TON	151
360-2001	CONC PVMT (CONT REINF - CRCP) (8")	SY	8215
432-2001	RIPRAP (CONC) (4 IN)	CY	59
360-2018	CURB (TY II)	LF	4138
360-2044*	CONC PVMT (CONT REINF - CRCP) (8") (HES)	SY	355
530-2038	DRIVEWAYS (CONC) (HES)	SY	118
536-2002	CONC MEDIAN	SY	96
538-2001	RIGHT OF WAY MARKERS	EA	2

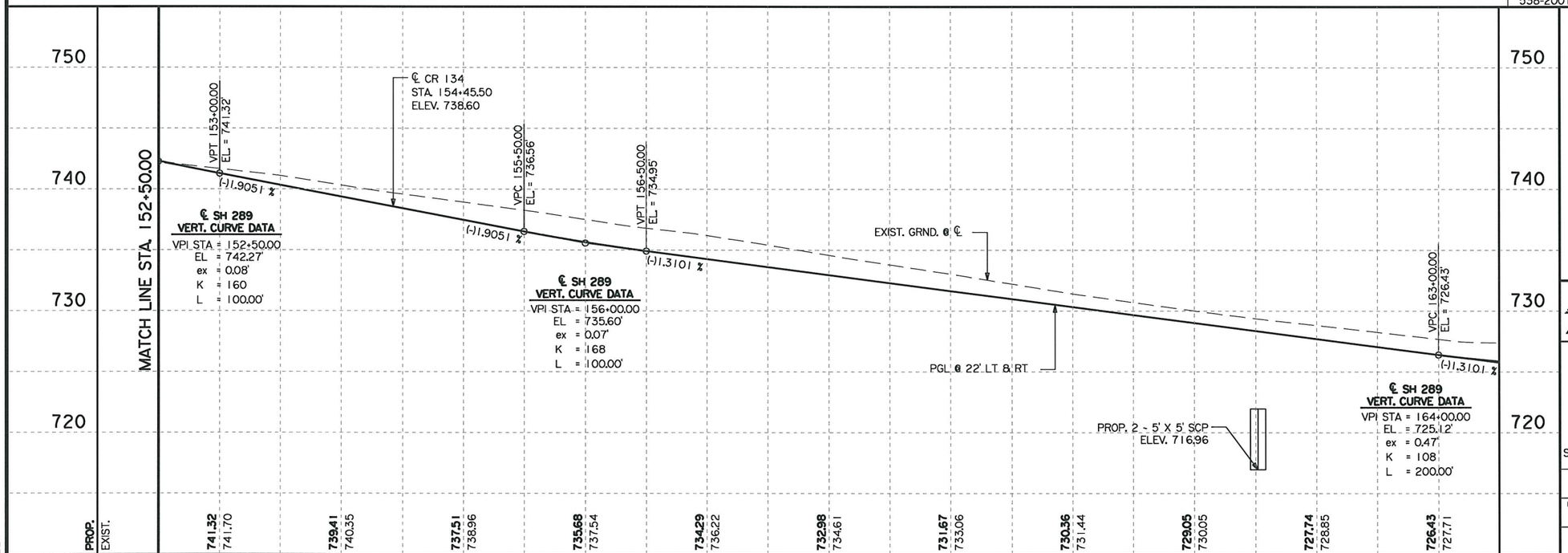

HASSAN SAM MOGHADASSI
84231
LICENSED PROFESSIONAL ENGINEER
STATE OF TEXAS

H. Moghadassi ,P.E. 7/12/11
Signature of Registrant & Date

$FILES$

Texas Department of Transportation
© 2011

SH 289
FM 455 TO N BUS 289C
PLAN PROFILE
STA. 152+50 TO STA. 163+50

SCALE: HORIZ: 1"=100'
VERT: 1"=10'

SHEET 4 OF 18

DESIGN	FED. RD. DIV. NO.	STATE PROJECT NO.		HIGHWAY NO.
SHM	6	SEE TITLE SHEET		SH 289
GRAPHICS	STATE	DISTRICT	COUNTY	SHEET NO.
OE	TEXAS	DALLAS	COLLIN	
CHECK	CONTROL	SECTION	JOB	118
SM	0091	03	P-201107-01	
CHECK				

$DATES$
$FILES$

$FILEABBREV$

TXDOT
100.0000 ft / IN.

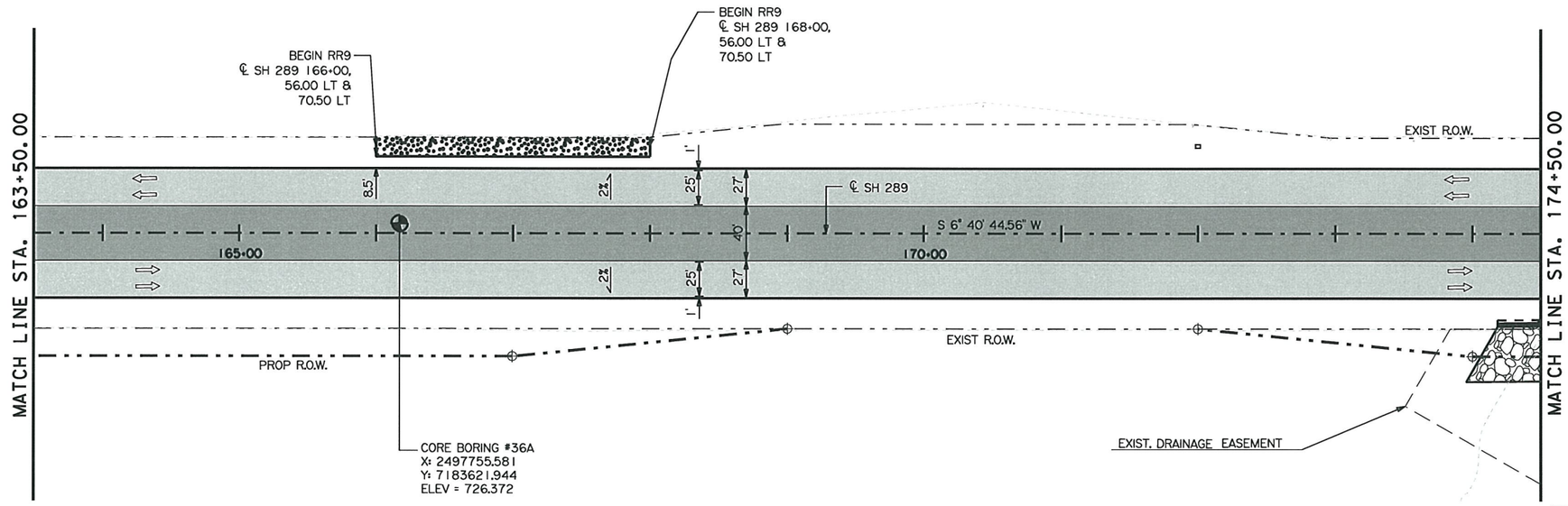

0 50 100
SCALE IN FEET

LEGEND

- (XXXX) POINT NUMBERS
- XXXX CURVE NUMBERS
- ASPHALT
- CONCRETE DRIVEWAY
- SEEDING AND FERTILIZER
- CONCRETE RDWY
- CONCRETE RIPRAP
- ⊕ RIGHT OF WAY MARKER

NOTE:
SEE MISCELLANEOUS DETAIL SHEET
FOR INTERSECTION TAPER DETAIL.

ITEM NO.	DESCRIPTION	UNIT	SHEET TOTAL
164-2039	DRILL SEEDING (PERM) (URBAN) (CLAY)	SY	1157
168-2001	VEGETATIVE WATERING	MG	334.7
260-2043	LIME (HYD. COM OR QK) (SLURRY)	TON	119
260-2027	LIME TRT (EXST MATL) (8")	SY	7905
340-2011	D - GR HMA (METH) TY - B PG64 22	TON	1631
360-2001	CONC PVMT (CONT REINF - CRCP) (8")	SY	6927
360-2018	CURB (TY II)	LF	4400
538-2001	RIGHT OF WAY MARKERS	EA	4

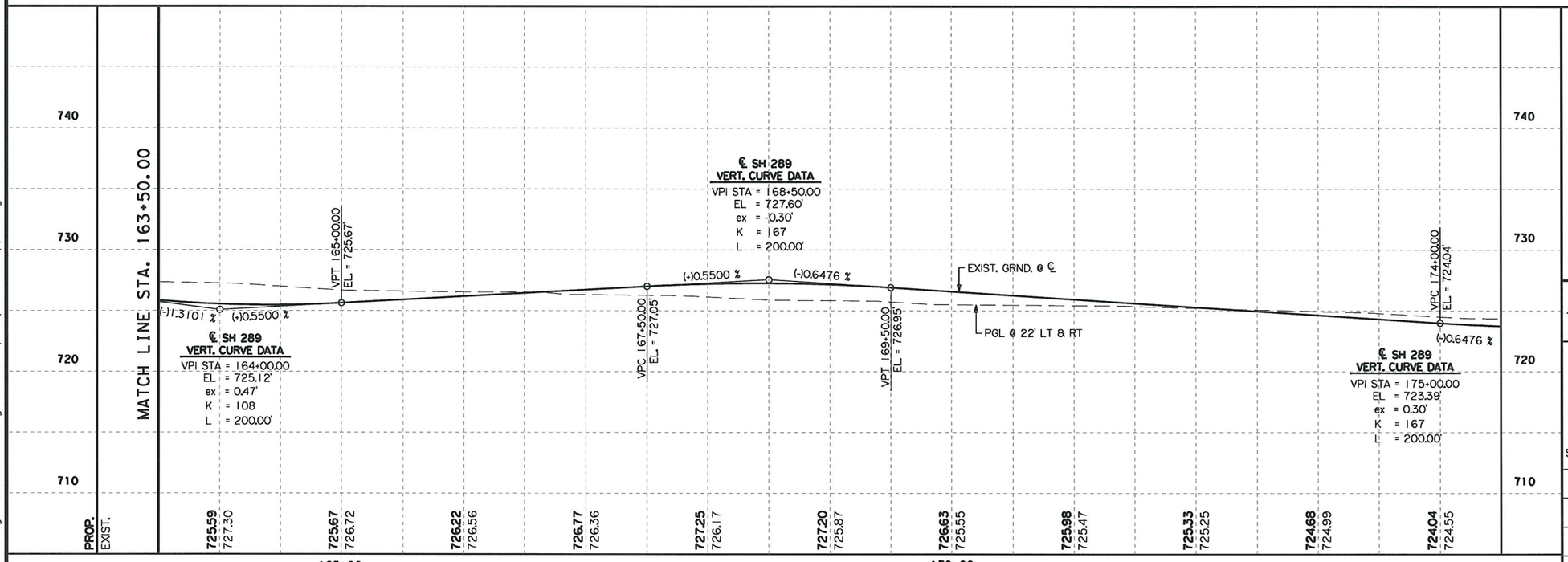

H. Moghadassi, P.E. 7/12/11
Signature of Registrant & Date

new*pp05.dgn

Texas Department of Transportation
© 2011

SH 289
FM 455 TO N BUS 289C
PLAN PROFILE
STA. 163+50 TO STA. 174+50

SCALE: HORIZ: 1"=100'
VERT: 1"=10'

SHEET 5 OF 18

DESIGN	FED. RD. DIV. NO.	STATE PROJECT NO.		HIGHWAY NO.
SHM	6	SEE TITLE SHEET		SH 289
GRAPHICS	STATE	DISTRICT	COUNTY	SHEET NO.
OE	TEXAS	DALLAS	COLLIN	
CHECK	CONTROL	SECTION	JOB	119
SM	0091	03	P-201107-01	
CHECK				

7/11/2011
I:\dalgm*s\sh289\design\sheets\pln&prof\new*pp05.dgn
...\sheets\pln&prof\new*pp05.dgn

TXDOT
100.0000 ft / IN.

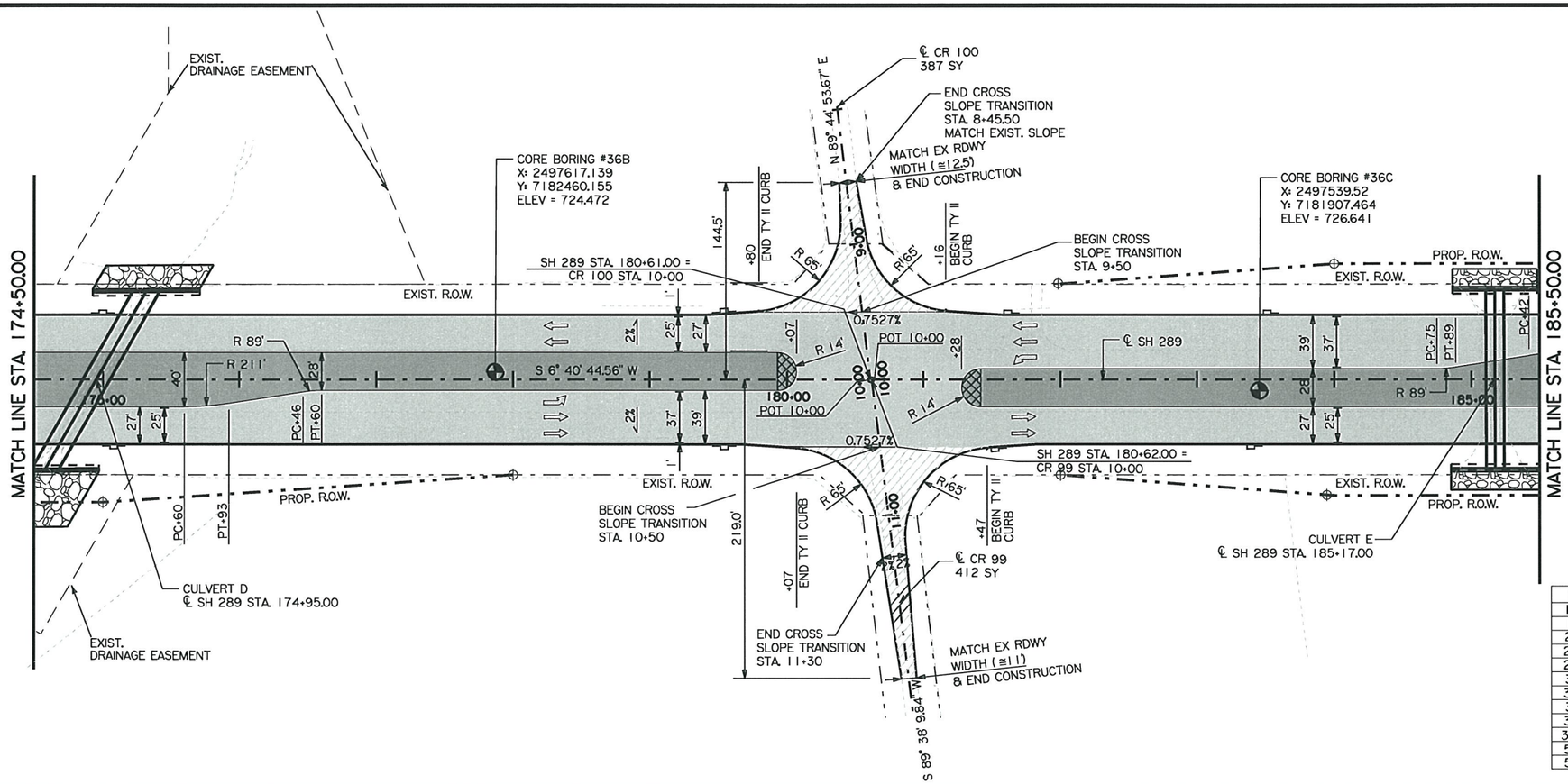

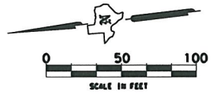

LEGEND

- (XXXX) POINT NUMBERS
- XXXX CURVE NUMBERS
- CONCRETE RDWY
- ASPHALT
- SEEDING AND FERTILIZER
- CONCRETE MEDIAN
- ⊕ RIGHT OF WAY MARKER

NOTE:
SEE MISCELLANEOUS DETAIL SHEET FOR INTERSECTION TAPER DETAIL.
* USE 4(30'x30") HES CONC (CR 100 & CR 99 CONSTRUCTION)

ITEM NO.	DESCRIPTION	UNIT	SHEET TOTAL
164-2039	DRILL SEEDING (PERM) (URBAN) (CLAY)	SY	9691
168-2001	VEGETATIVE WATERING	MG	280.3
260-2043	LIME (HYD, COM OR QK) (SLURRY)	TON	153
260-2006	LIME TRT (EXST MATL) (6")	SY	1050
260-2027	LIME TRT (EXST MATL) (8")	SY	9568
340-2011	D - GR HMA (METH) TY - B PG64 22	TON	2324
340-2050	D - GR HMA (METH) TY - C PG70 22	TON	102
360-2001	CONC PVMT (CONT REINF - CRCP) (8")	SY	8639
360-2018	CURB (TY II)	LF	3915
360-2044*	CONC PVMT (CONT REINF - CRCP) (8") (HES)	SY	400
536-2002	CONC MEDIAN	SY	62
538-2001	RIGHT OF WAY MARKERS	EA	6

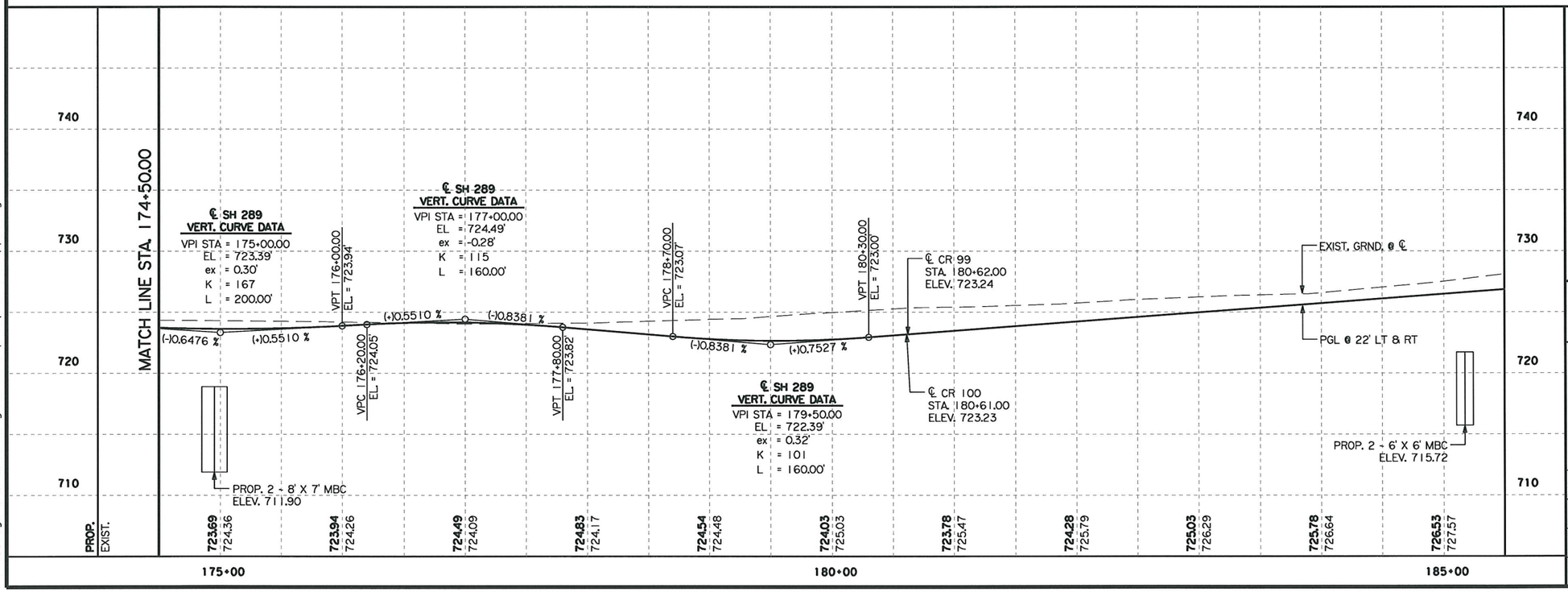

H. Moghadassi, P.E. 7/12/11
Signature of Registrant & Date

new*pp06.dgn

Texas Department of Transportation
© 2011

SH 289
FM 455 TO N BUS 289C
PLAN PROFILE
STA. 174+50 TO STA. 185+50

SCALE: HORIZ: 1"=100'
VERT: 1"=10'

SHEET 6 OF 18

DESIGN	FED.RD. DIV.NO.	STATE PROJECT NO.		HIGHWAY NO.
SHM	6	SEE TITLE SHEET		SH 289
GRAPHICS OE	STATE	DISTRICT	COUNTY	SHEET NO.
CHECK SM	TEXAS	DALLAS	COLLIN	120
CHECK	CONTROL	SECTION	JOB	
	0091	03	P-201107-01	

7/11/2011
I:\dal\dgn\s\sh289\design\sheets\pln&prof\new*pp06.dgn
...\sheets\pln&prof\new*pp06.dgn

TXDOT
100.0000 ft / IN.

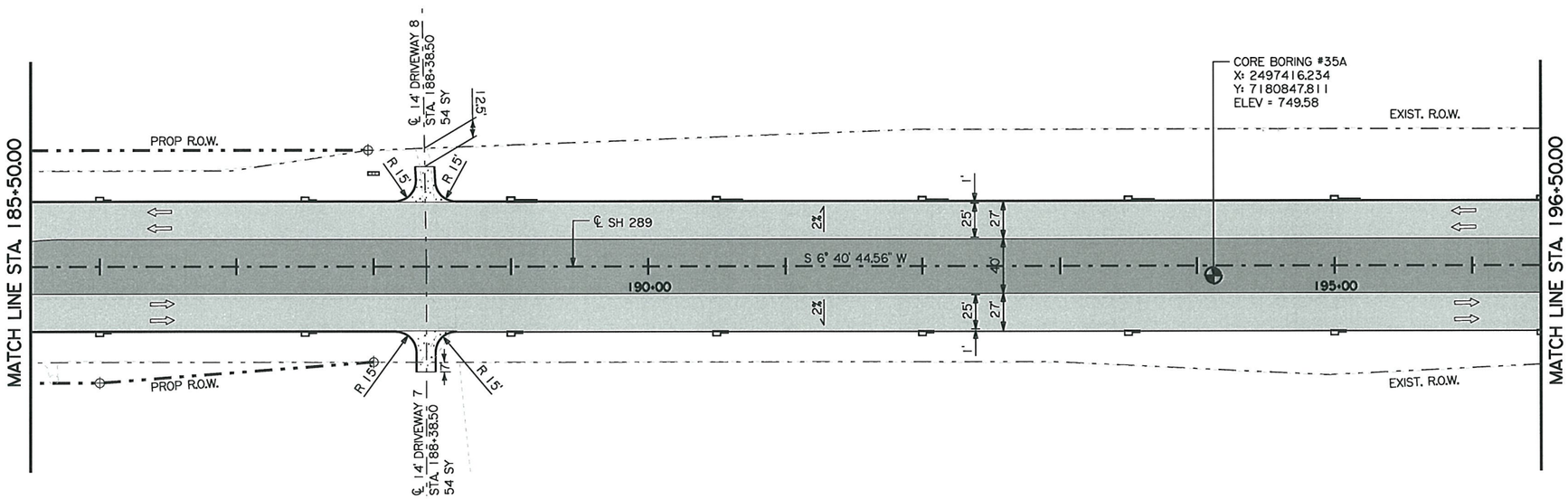

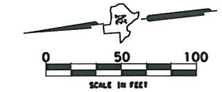

LEGEND

- (XXXX) POINT NUMBERS
- XXXX CURVE NUMBERS
- ASPHALT
- CONCRETE DRIVEWAY
- SEEDING AND FERTILIZER
- CONCRETE RDWY
- RIGHT OF WAY MARKER

NOTE:
SEE MISCELLANEOUS DETAIL SHEET
FOR INTERSECTION TAPER DETAIL.

ITEM NO.	DESCRIPTION	UNIT	SHEET TOTAL
164-2039	DRILL SEEDING (PERM) (URBAN) (CLAY)	SY	13458
168-2001	VEGETATIVE WATERING	MG	389.3
260-2043	LIME (HYD, COM OR QK) (SLURRY)	TON	122
260-2027	LIME TRT (EXST MATL) (8")	SY	8150
340-2011	D - GR HMA (METH) TY - B PG64 22	TON	1686
360-2001	CONC PVMT (CONT REINF - CRCP) (8")	SY	6928
360-2018	CURB (TY II)	LF	4456
530-2038	DRIVEWAYS (CONC) (HES)	SY	108
538-2001	RIGHT OF WAY MARKERS	EA	3

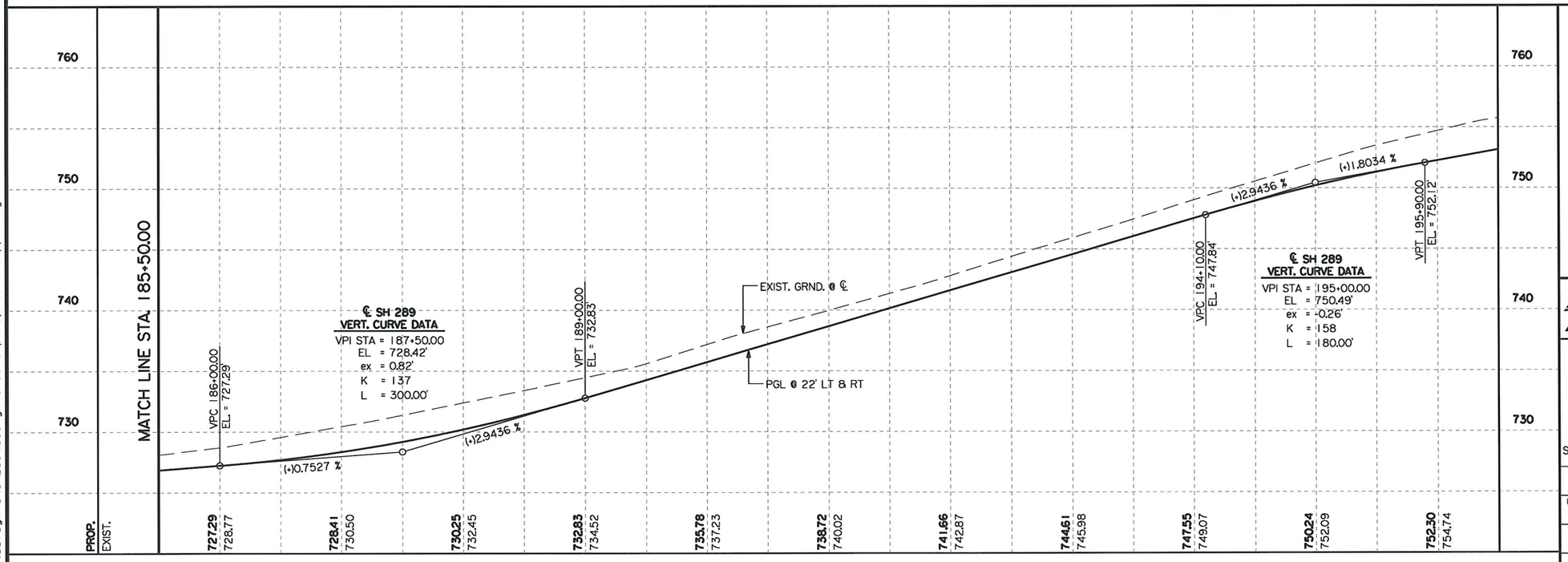

H. Moghadassi , P.E. 7/12/11
Signature of Registrant & Date

new*pp07.dgn

Texas Department of Transportation
© 2011

SH 289
FM 455 TO N BUS 289C
PLAN PROFILE
STA. 185+50 TO STA. 196+50

SCALE: HORIZ: 1"=100'
VERT: 1"=10'

SHEET 7 OF 18

DESIGN	FED.RD. DIV.NO.	STATE PROJECT NO.		HIGHWAY NO.
SHM	6	SEE TITLE SHEET		SH 289
GRAPHICS	STATE	DISTRICT	COUNTY	SHEET NO.
OE	TEXAS	DALLAS	COLLIN	
CHECK	CONTROL	SECTION	JOB	121
SM	0091	03	P-201107-01	
CHECK				

7/11/2011
I:\dal\dgn\s\sh289\design\sheets\pln&prof\new*pp07.dgn
...\sheets\pln&prof\new*pp07.dgn

TXDOT
100.0000 ft / IN.

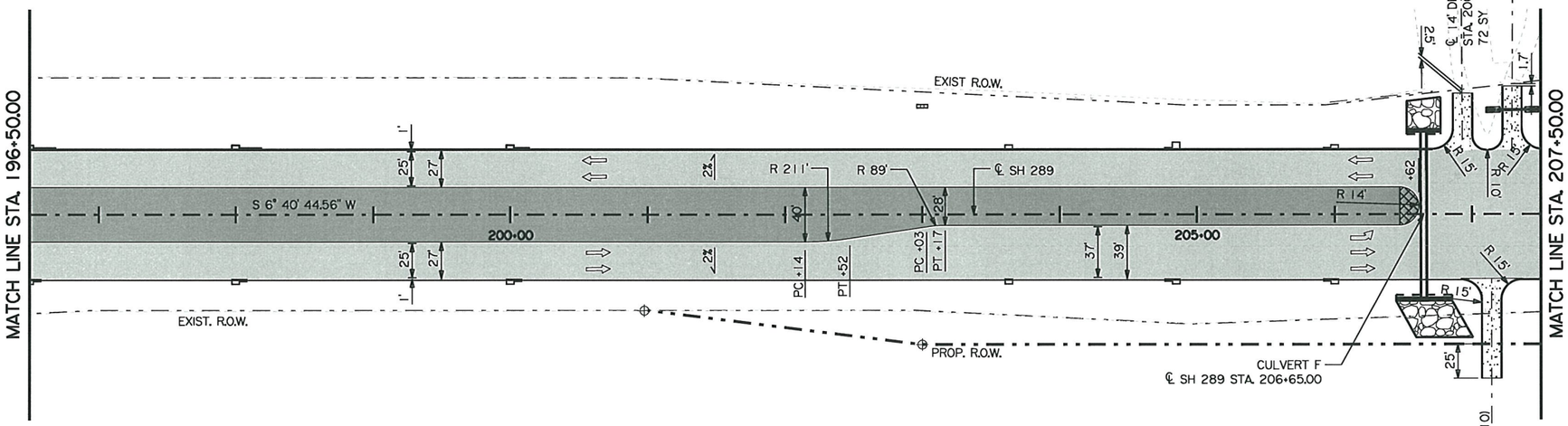

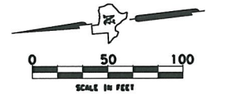

LEGEND

- XXXX — POINT NUMBERS
- XXXX — CURVE NUMBERS
- ASPHALT
- CONCRETE DRIVEWAY
- SEEDING AND FERTILIZER
- CONCRETE RDWY
- CONCRETE MEDIAN
- RIGHT OF WAY MARKER

NOTE:
SEE MISCELLANEOUS DETAIL SHEET
FOR INTERSECTION TAPER DETAIL.

ITEM NO.	DESCRIPTION	UNIT	SHEET TOTAL
164-2039	DRILL SEEDING (PERM) (RURAL) (CLAY)	SY	13190
168-2001	VEGETATIVE WATERING	MG	381.5
260-2043	LIME (HYD. COM OR QK) (SLURRY)	TON	132
260-2027	LIME TRT (EXST MATL) (8")	SY	8781
340-2011	D - GR HMA (METH) TY - B PG64 22	TON	1828
360-2001	CONC PVMT (CONT REINF - CRCP) (8")	SY	7840
360-2018	CURB (TY II)	LF	4427
530-2038	DRIVEWAYS (CONC) (HES)	SY	280
536-2002	CONC MEDIAN	SY	31
538-2001	RIGHT OF WAY MARKERS	EA	2

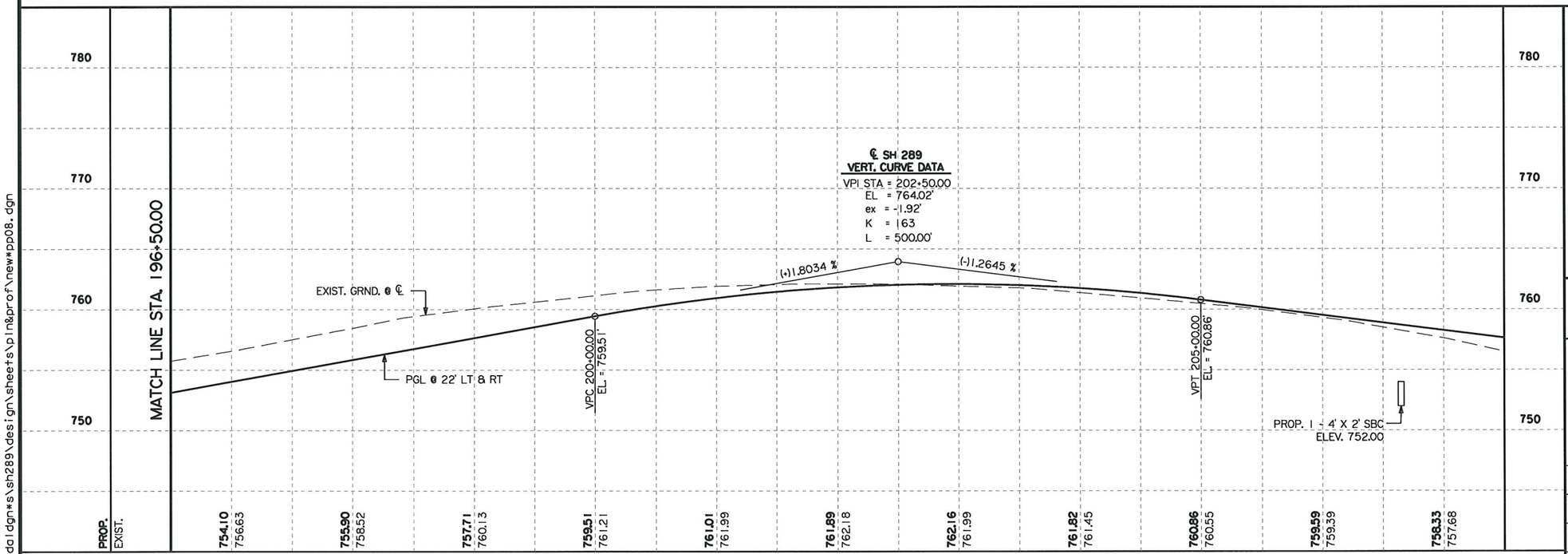

H. Moghadassi ,P.E. 7/12/11
Signature of Registrant & Date

new*pp08.dgn

Texas Department of Transportation
© 2011

SH 289
FM 455 TO N BUS 289C
PLAN PROFILE
STA. 196+50 TO STA. 207+50

SCALE: HORIZ: 1"=100'
VERT: 1"=10'

SHEET 8 OF 18

DESIGN	FED. RD. DIV. NO.	STATE PROJECT NO.		HIGHWAY NO.
SHM	6	SEE TITLE SHEET		SH 289
GRAPHICS	STATE	DISTRICT	COUNTY	SHEET NO.
OE	TEXAS	DALLAS	COLLIN	122
CHECK	CONTROL	SECTION	JOB	
SM	0091	03	P-201107-01	
CHECK				

7/11/2011
...\sheets\pln&prof\new*pp08.dgn

TXDOT
100.0000 ft / IN.

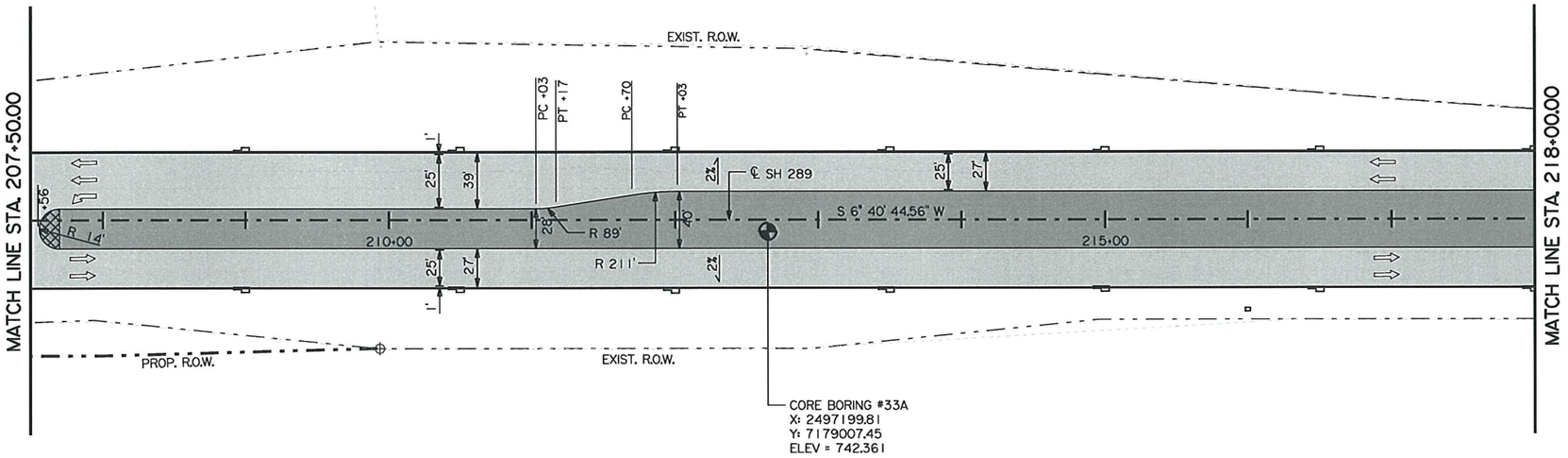

LEGEND

- XXXX — POINT NUMBERS
- XXXX — CURVE NUMBERS
- ASPHALT
- CONCRETE DRIVEWAY
- SEEDING AND FERTILIZER
- CONCRETE RDWY
- CONCRETE MEDIAN
- RIGHT OF WAY MARKER

ITEM NO.	DESCRIPTION	UNIT	SHEET TOTAL
164-2039	DRILL SEEDING (PERM) (URBAN) (CLAY)	SY	15077
168-2001	VEGETATIVE WATERING	MG	436.1
260-2043	LIME (HYD, COM OR QK) (SLURRY)	TON	122
260-2027	LIME TRT (EXST MATL) (8")	SY	8105
340-2011	D - GR HMA (METH) TY - B PG64 22	TON	1680
360-2001	CONC PVMT (CONT REINF - CRCP) (8")	SY	7172
360-2018	CURB (TY II)	LF	22974
536-2002	CONC MEDIAN	SY	31
538-2001	RIGHT OF WAY MARKERS	EA	1

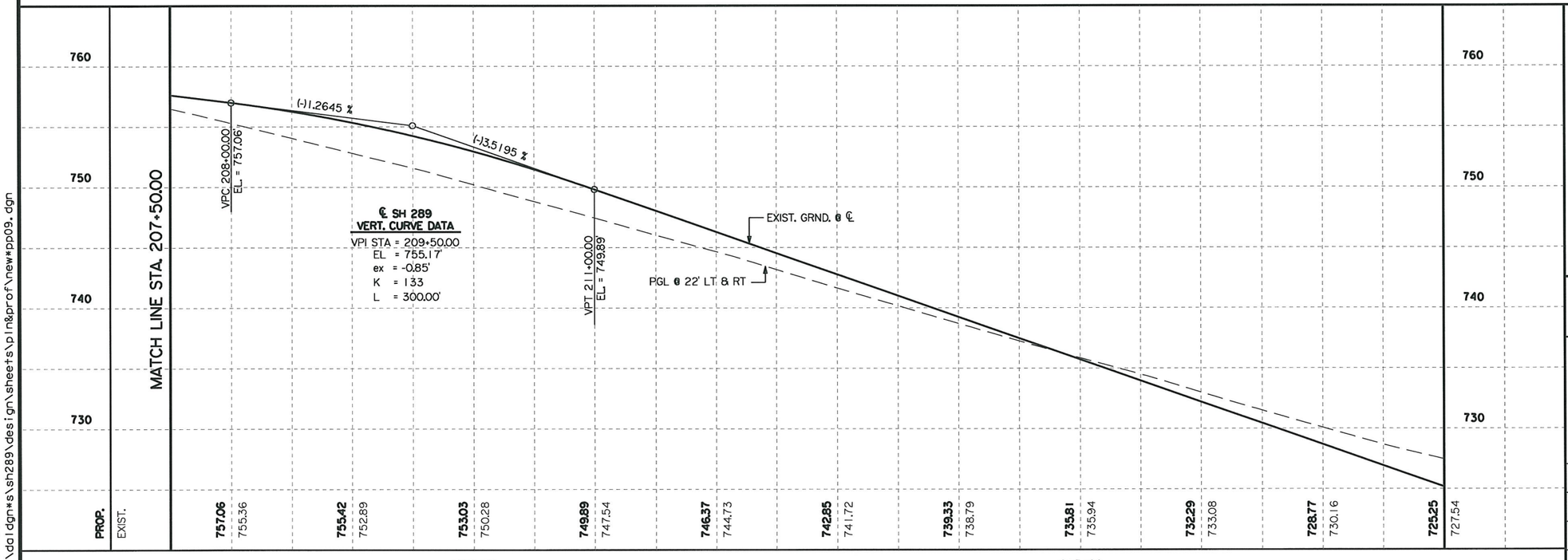

H. Moghadassi, P.E. 7/12/11
Signature of Registrant & Date

new*pp09.dgn

Texas Department of Transportation
© 2011

SH 289
FM 455 TO N BUS 289C
PLAN PROFILE
STA. 207+50 TO STA. 218+00

SCALE: HORIZ: 1"=100'
VERT: 1"=10'

SHEET 9 OF 18

DESIGN	FED. RD. DIV. NO.	STATE PROJECT NO.		HIGHWAY NO.
SHM	6	SEE TITLE SHEET		SH 289
GRAPHICS	STATE	DISTRICT	COUNTY	SHEET NO.
OE	TEXAS	DALLAS	COLLIN	
CHECK	CONTROL	SECTION	JOB	123
SM	0091	03	P-201107-01	
CHECK				

7/11/2011
t:\dal\dgn*s\sh289\design\sheets\pln&prof\new*pp09.dgn
...\sheets\pln&prof\new*pp09.dgn

TXDOT
100.0000 ft / IN.

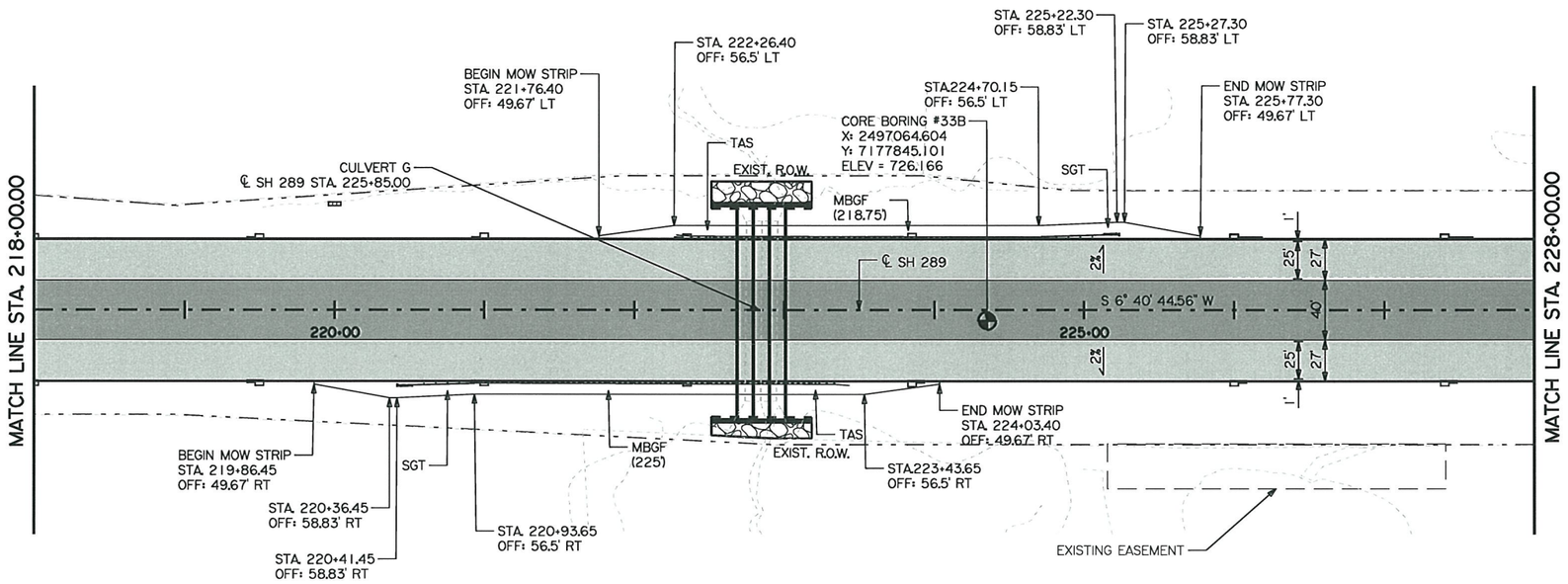

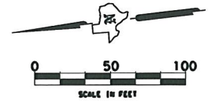

LEGEND

- XXXX — POINT NUMBERS
- XXXX — CURVE NUMBERS
- ASPHALT
- CONCRETE DRIVEWAY
- SEEDING AND FERTILIZER
- CONCRETE RDWY
- FLOW DIRECTION

ITEM NO.	DESCRIPTION	UNIT	SHEET TOTAL
164-2039	DRILL SEEDING (PERM) (URBAN) (CLAY)	SY	11966
168-2001	VEGETATIVE WATERING	MG	346.1
260-2043	LIME (HYD, COM OR QK) (SLURRY)	TON	108
260-2027	LIME TRT (EXST MATL) (8")	SY	7186
340-2011	D - GR HMA (METH) TY - B PG64 22	TON	1483
360-2001	CONC PVMT (CONT REINF - CRCP) (8")	SY	6297
360-2018	CURB (TY II)	LF	4000
540-2001	MTL W - BEAM GD FEN (TIM POST)	LF	443.75
540-2005	TERMINAL ANCHOR SECTION	EA	2
544-2001	GUARDRAIL END TREATMENT (INSTALL)	EA	2
432-2039	RIPRAP (MOW STRIP) (4 IN)	CY	62.21

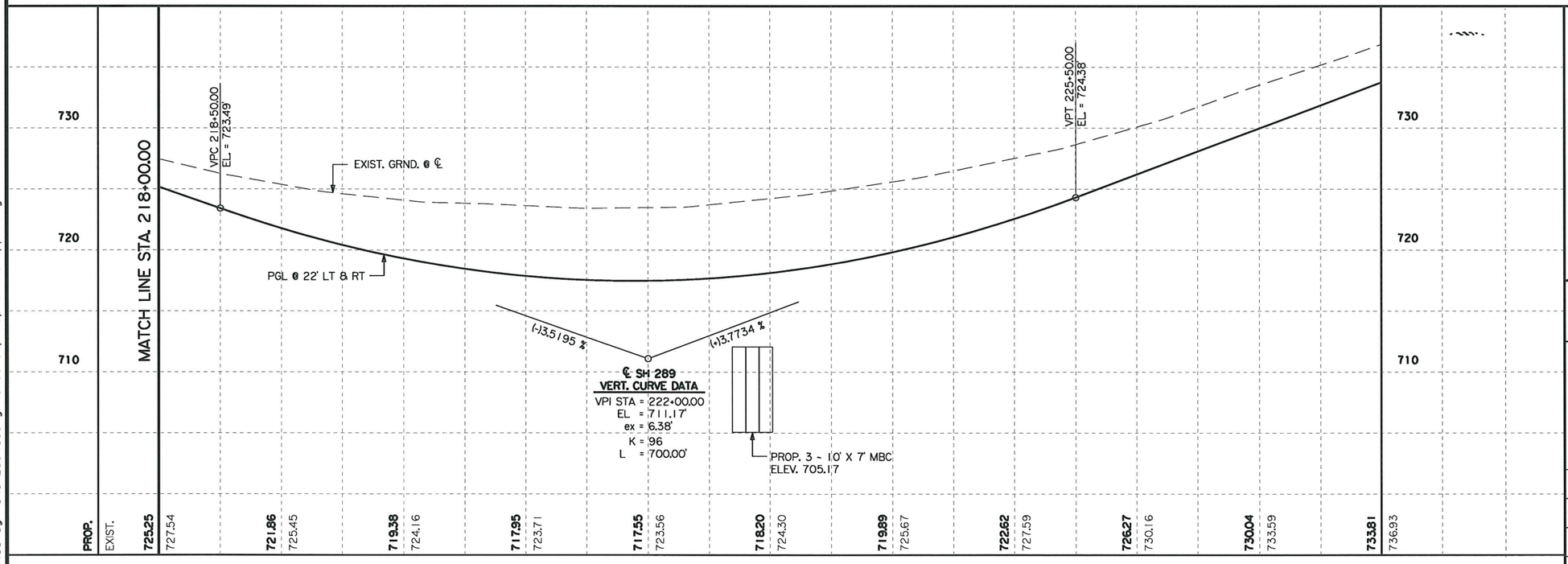

HASSAN SAM MOGHADASSI
84231
LICENSED PROFESSIONAL ENGINEER
STATE OF TEXAS

H. Moghadassi, P.E. 7/12/11
Signature of Registrant & Date

new*pp10.dgn

Texas Department of Transportation
© 2011

SH 289
FM 455 TO N BUS 289C
PLAN PROFILE
STA. 218+00 TO STA. 228+00

SCALE: HORIZ: 1"=100'
VERT: 1"=10'

SHEET 10 OF 18

DESIGN	FED. RD. DIV. NO.	STATE PROJECT NO.		HIGHWAY NO.
SHM	6	SEE TITLE SHEET		SH 289
GRAPHICS	STATE	DISTRICT	COUNTY	SHEET NO.
OE	TEXAS	DALLAS	COLLIN	
CHECK	CONTROL	SECTION	JOB	124
SM	0091	03	P-201107-01	
CHECK				

7/11/2011
I:\dal\dgn\s\sh289\design\sheets\pln&prof\new*pp10.dgn
...\sheets\pln&prof\new*pp10.dgn

TXDOT
100.0000 ft / IN.

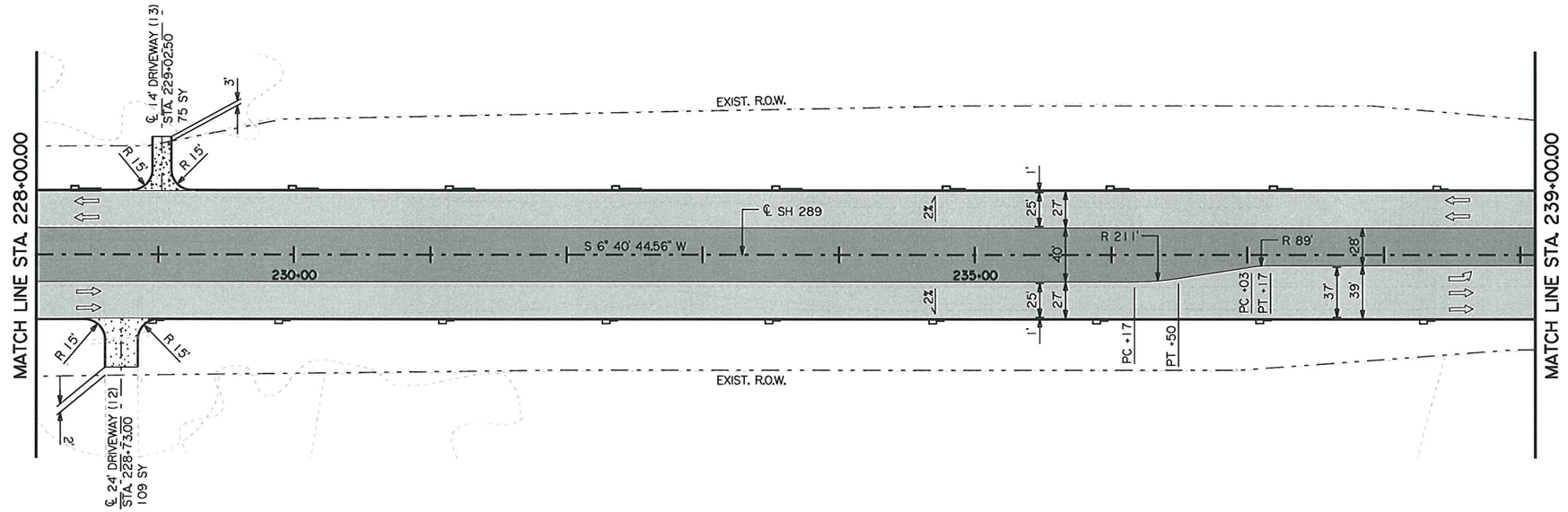

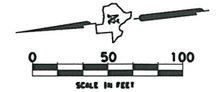

LEGEND

- XXXX — POINT NUMBERS
- XXXX — CURVE NUMBERS
- ASPHALT
- CONCRETE DRIVEWAY
- SEEDING AND FERTILIZER
- CONCRETE RDWY

NOTE:
SEE MISCELLANEOUS DETAIL SHEET
FOR INTERSECTION TAPER DETAIL.

ITEM NO.	DESCRIPTION	UNIT	SHEET TOTAL
164-2039	DRILL SEEDING (PERM) (URBAN) (CLAY)	SY	15476
168-2001	VEGETATIVE WATERING	MG	447.6
260-2043	LIME (HYD, COM OR QK) (SLURRY)	TON	123
260-2027	LIME TRT (EXST MATL) (8")	SY	8225
340-2011	D - GR HMA (METH) TY - B PG64 22	TON	1702
360-2001	CONC PVMT (CONT REINF - CRCP) (8")	SY	7247
360-2018	CURB (TY II)	LF	4486
530-2038	DRIVEWAYS (CONC) (HES)	SY	184

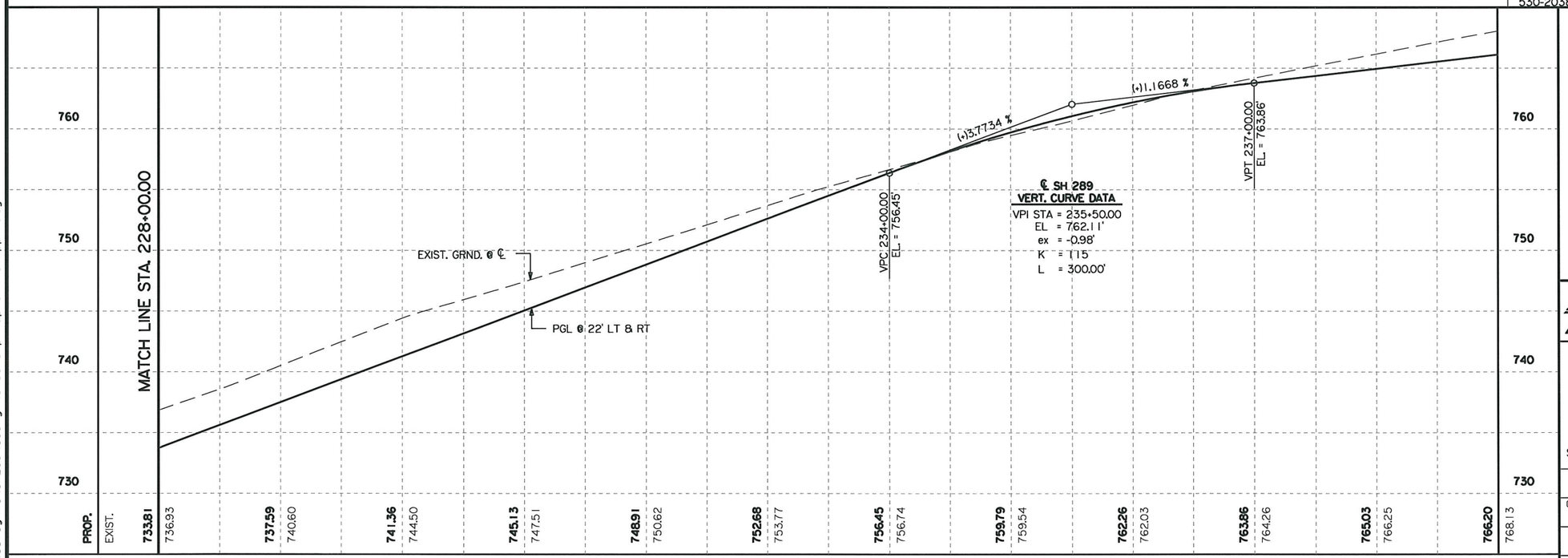

H. Moghadassi, P.E. 7/12/11
Signature of Registrant & Date

new*pp11.dgn

Texas Department of Transportation
© 2011

SH 289
FM 455 TO N BUS 289C
PLAN PROFILE
STA. 228+00 TO STA. 239+00

SCALE: HORIZ: 1"=100'
VERT: 1"=10'

SHEET 11 OF 18

DESIGN	FED.RD. DIV.NO.	STATE PROJECT NO.		HIGHWAY NO.
SHM	6	SEE TITLE SHEET		SH 289
GRAPHICS OE	STATE	DISTRICT	COUNTY	SHEET NO.
CHECK SM	TEXAS	DALLAS	COLLIN	125
CHECK	CONTROL	SECTION	JOB	
	0091	03	P-201107-01	

...\sheets\pln&prof\new*pp11.dgn

7/11/2011
I:\dal\dgn*s\sh289\design\sheets\pln&prof\new*pp11.dgn

TXDOT
100.0000 ft / IN.

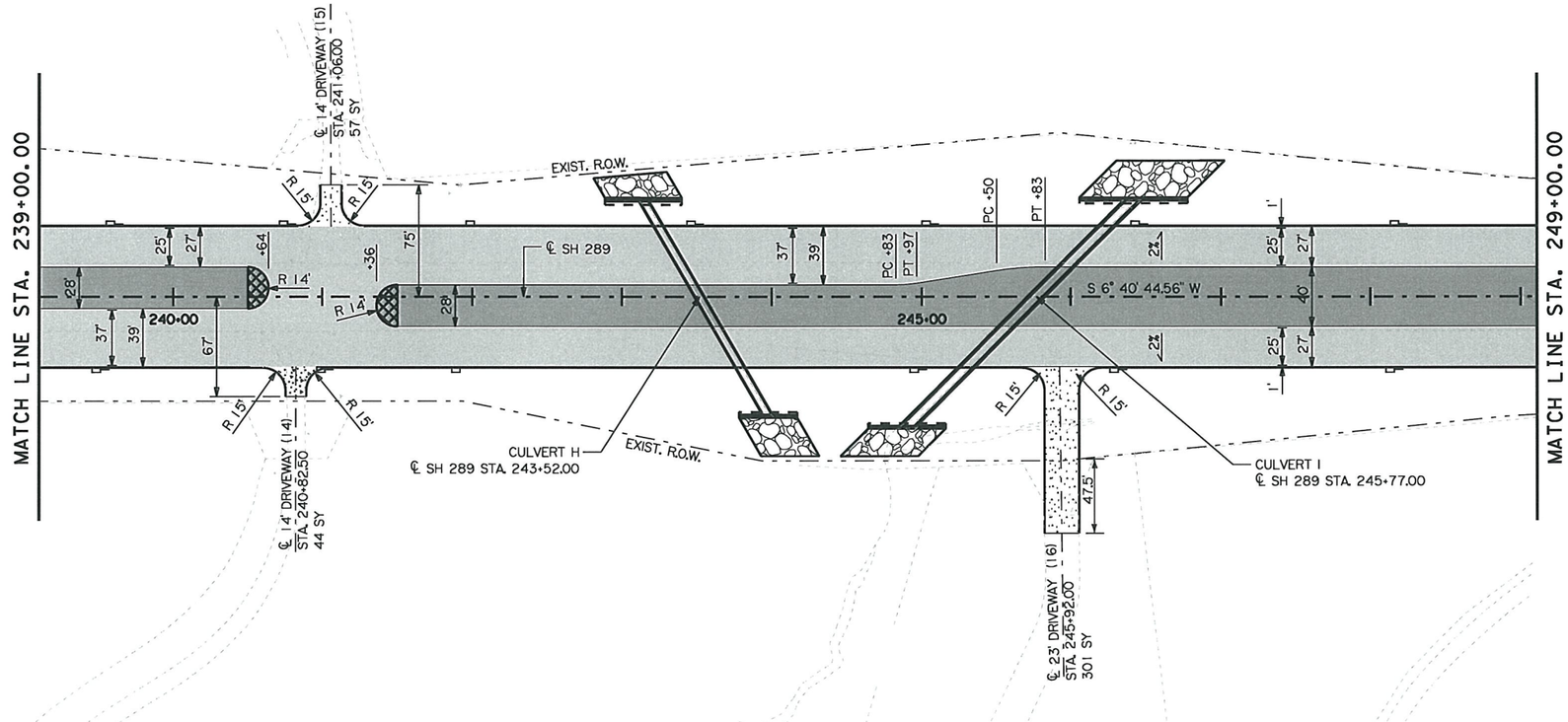

0 50 100
SCALE IN FEET

LEGEND

- (XXXX) POINT NUMBERS
- XXXX CURVE NUMBERS
- ASPHALT
- CONCRETE DRIVEWAY
- SEEDING AND FERTILIZER
- CONCRETE RDWY
- CONCRETE MEDIAN

NOTE:
SEE MISCELLANEOUS DETAIL SHEET
FOR INTERSECTION TAPER DETAIL.

ITEM NO.	DESCRIPTION	UNIT	SHEET TOTAL
164-2039	DRILL SEEDING (PERM) (URBAN) (CLAY)	SY	12028
168-2001	VEGETATIVE WATERING	MG	347.9
260-2043	LIME (HYD. COM OR QK) (SLURRY)	TON	121
260-2027	LIME TRT (EXST MATL) (8")	SY	8078
340-2011	D - GR HMA (METH) TY - B PG64 22	TON	1682
360-2001	CONC PVMT (CONT REINF - CRCP) (8")	SY	7215
360-2018	CURB (TY II)	LF	4110
530-2038	DRIVEWAYS (CONC) (HES)	SY	402
536-2002	CONC MEDIAN	SY	58

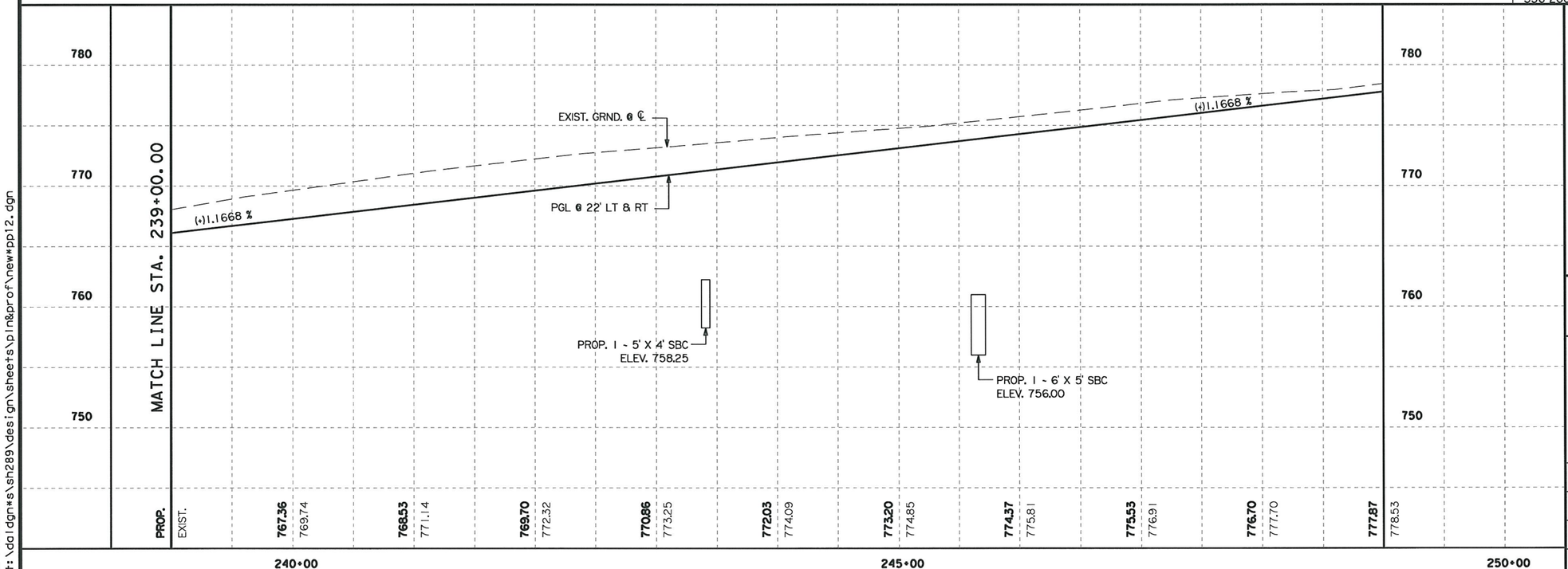

HASSAN SAM MOGHADASSI
84231
LICENSED PROFESSIONAL ENGINEER
STATE OF TEXAS

H. Moghadassi ,P.E. 7/12/11
Signature of Registrant & Date

new*pp12.dgn

Texas Department of Transportation
© 2011

SH 289
FM 455 TO N BUS 289C
PLAN PROFILE
STA. 239+00 TO STA. 249+00

SCALE: HORIZ: 1"=100'
VERT: 1"=10'

SHEET 12 OF 18

DESIGN	FED. RD. DIV. NO.	STATE PROJECT NO.		HIGHWAY NO.
SHM	6	SEE TITLE SHEET		SH 289
GRAPHICS	STATE	DISTRICT	COUNTY	SHEET NO.
OE	TEXAS	DALLAS	COLLIN	
CHECK	CONTROL	SECTION	JOB	126
SM	0091	03	P-201107-01	
CHECK				

7/11/2011
I:\dal\dgn\s\sh289\design\sheets\pln&prof\new*pp12.dgn
...\sheets\pln&prof\new*pp12.dgn

TXDOT
100.0000 ft / IN.

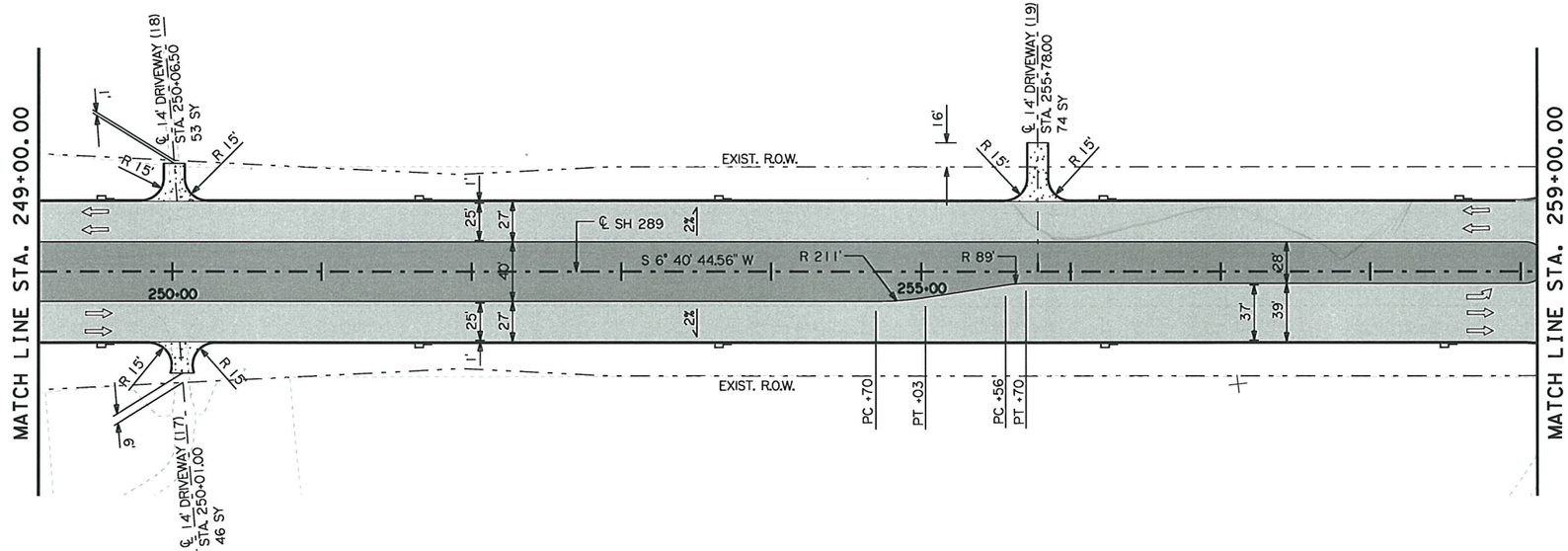

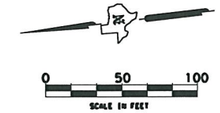

LEGEND

- (XXXX) POINT NUMBERS
- XXXX CURVE NUMBERS
- ASPHALT
- CONCRETE DRIVEWAY
- SEEDING AND FERTILIZER
- CONCRETE RDWY

NOTE:
SEE MISCELLANEOUS DETAIL SHEET
FOR INTERSECTION TAPER DETAIL.

ITEM NO.	DESCRIPTION	UNIT	SHEET TOTAL
164-2039	DRILL SEEDING (PERM) (URBAN) (CLAY)	SY	8640
168-2001	VEGETATIVE WATERING	MG	249.9
260-2043	LIME (HYD, COM OR QK) (SLURRY)	TON	116
260-2027	LIME TRT (EXST MATL) (8")	SY	7704
340-2011	D - GR HMA (METH) TY - B PG64 22	TON	1597
360-2001	CONC PVMT (CONT REINF - CRCP) (8")	SY	6814
360-2018	CURB (TY II)	LF	4073
530-2038	DRIVEWAYS (CONC) (HES)	SY	173

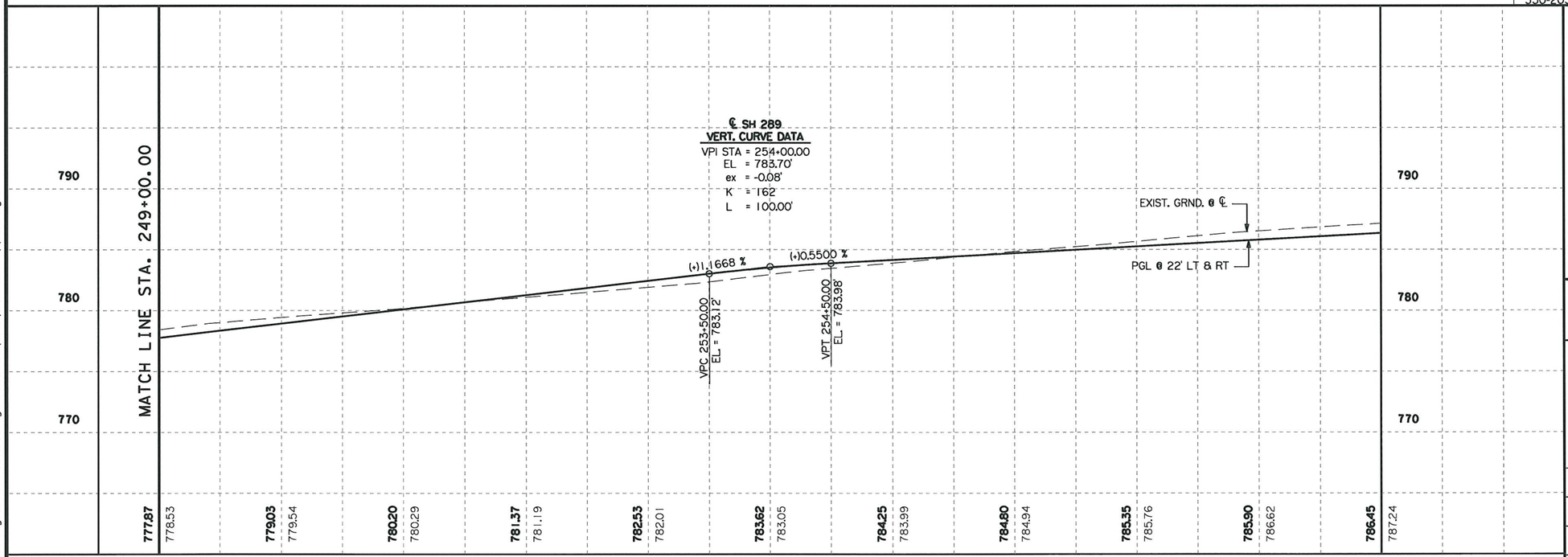

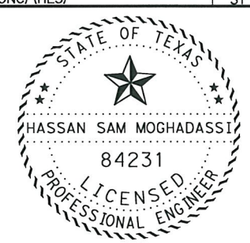

H. Moghadassi, P.E. 7/12/11
Signature of Registrant & Date

new*pp13.dgn

Texas Department of Transportation
© 2011

SH 289
FM 455 TO N BUS 289C
PLAN PROFILE
STA. 249+00 TO STA. 259+00

SCALE: HORIZ: 1"=100'
VERT: 1"=10'
SHEET 13 OF 18

DESIGN	FED.RD. DIV.NO.	STATE PROJECT NO.		HIGHWAY NO.
SHM	6	SEE TITLE SHEET		SH 289
GRAPHICS	STATE	DISTRICT	COUNTY	SHEET NO.
OE	TEXAS	DALLAS	COLLIN	
CHECK	CONTROL	SECTION	JOB	
SM	0091	03		127
CHECK				

P-201107-01

7/11/2011
I:\dgn\s\sh289\design\sheets\pln&prof\new*pp13.dgn
...\sheets\pln&prof\new*pp13.dgn

TXDOT
100.0000 ft / IN.

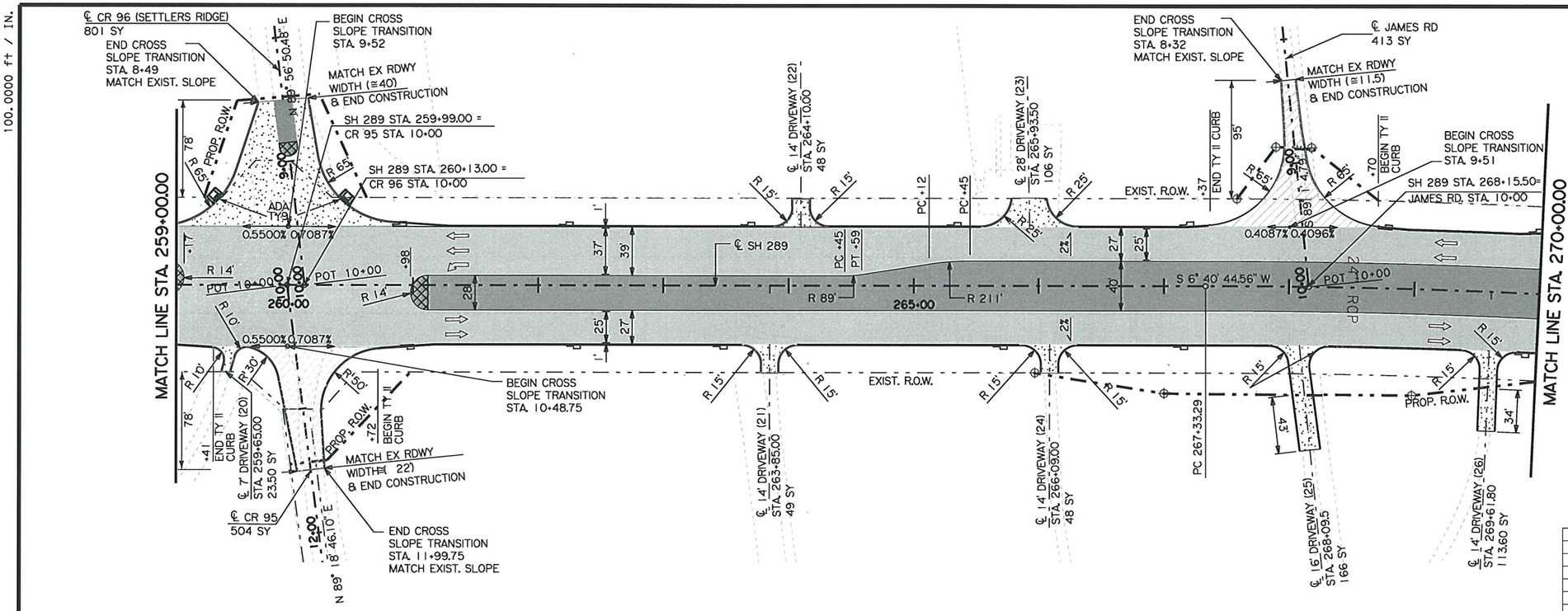

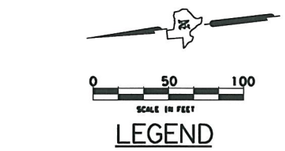

LEGEND

- XXXX — POINT NUMBERS
- XXXX — CURVE NUMBERS
- ASPHALT
- CONCRETE DRIVEWAY/CROSS STREET
- SEEDING AND FERTILIZER
- CONCRETE RDWY
- CONCRETE MEDIAN
- RIGHT OF WAY MARKER

NOTE:
SEE MISCELLANEOUS DETAIL SHEET FOR INTERSECTION TAPER DETAIL.
- *USE 2(40'x40') HES CONC (CR 96 CONSTRUCTION)
- *USE 4(30'x30') HES CONC (CR 95 & JAMES RD CONSTRUCTION)
- *SEE TCP DETAIL INTERSECTION

ITEM NO.	DESCRIPTION	UNIT	SHEET TOTAL
164-2039	DRILL SEEDING (PERM) (URBAN) (CLAY)	SY	9283
168-2001	VEGETATIVE WATERING	MG	268.5
260-2043	LIME (HYD, COM OR QK) (SLURRY)	TON	159
260-2006	LIME TRT (EXST MATL) (6")	SY	1018
260-2027	LIME TRT (EXST MATL) (8")	SY	10000
531-2012	CURB RAMPS (TY 9)	EA	2
340-2011	D - GR HMA (METH) TY - B PG64 22	TON	2413
340-2050	D - GR HMA (METH) TY - C PG70 22	TON	102
360-2001	CONC PVMT (CONT REINF - CRCP) (8")	SY	7506
360-2044*	CONC PVMT (CONT REINF - CRCP) (8") (HES)	SY	755
360-2018	CURB (TY II)	LF	4429
530-2038	DRIVEWAYS (CONC) (HES)	SY	554.1
536-2002	CONC MEDIAN	SY	74
538-2001	RIGHT OF WAY MARKERS	EA	6

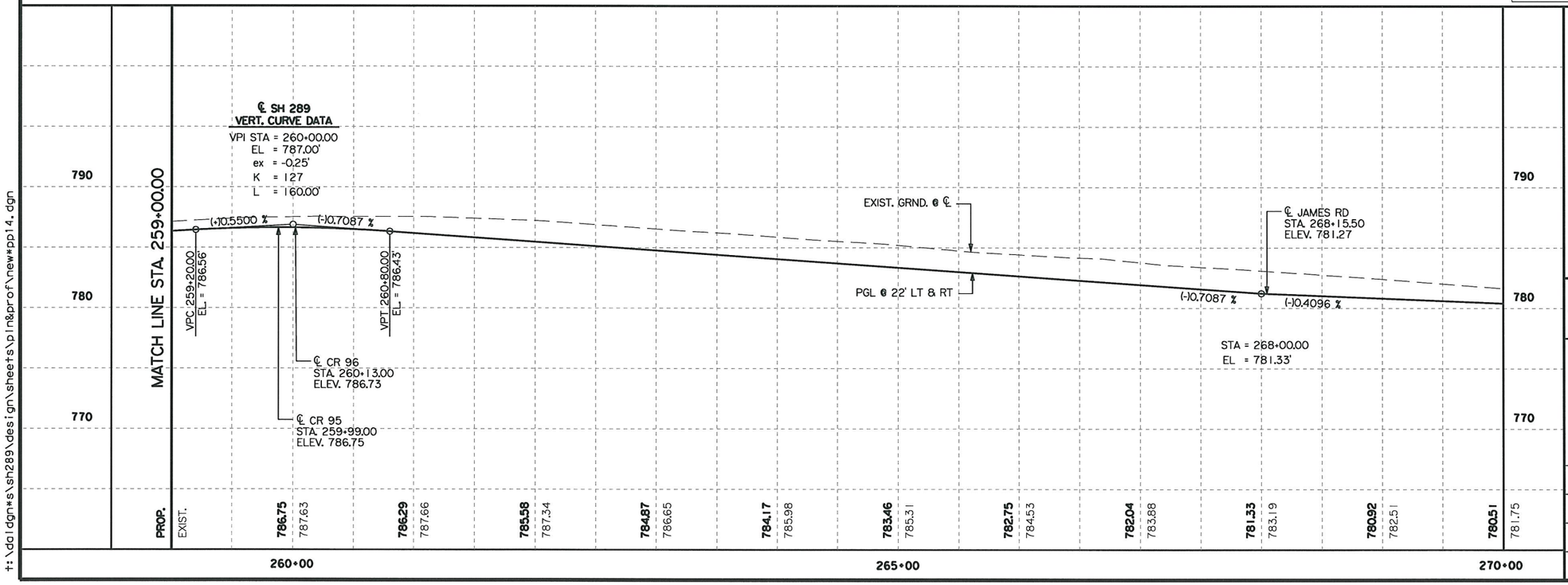

STATE OF TEXAS
HASSAN SAM MOGHADASSI
84231
LICENSED PROFESSIONAL ENGINEER

H. Moghadassi, P.E. 7/12/11
Signature of Registrant & Date

new*pp14.dgn

Texas Department of Transportation
© 2011

SH 289
FM 455 TO N BUS 289C
PLAN PROFILE
STA. 259+00 TO STA. 270+00

SCALE: HORIZ: 1"=100'
VERT: 1"=10'

SHEET 14 OF 18

DESIGN	FED.RD. DIV.NO.	STATE PROJECT NO.		HIGHWAY NO.
SHM	6	SEE TITLE SHEET		SH 289
GRAPHICS OE	STATE	DISTRICT	COUNTY	SHEET NO.
CHECK SM	TEXAS	DALLAS	COLLIN	
CHECK	CONTROL	SECTION	JOB	128
	0091	03	P-201107-01	

7/11/2011
t:\dal\dgn*s\sh289\design\sheets\pln&prof\new*pp14.dgn
...\sheets\pln&prof\new*pp14.dgn

$USER$
$SCALE$

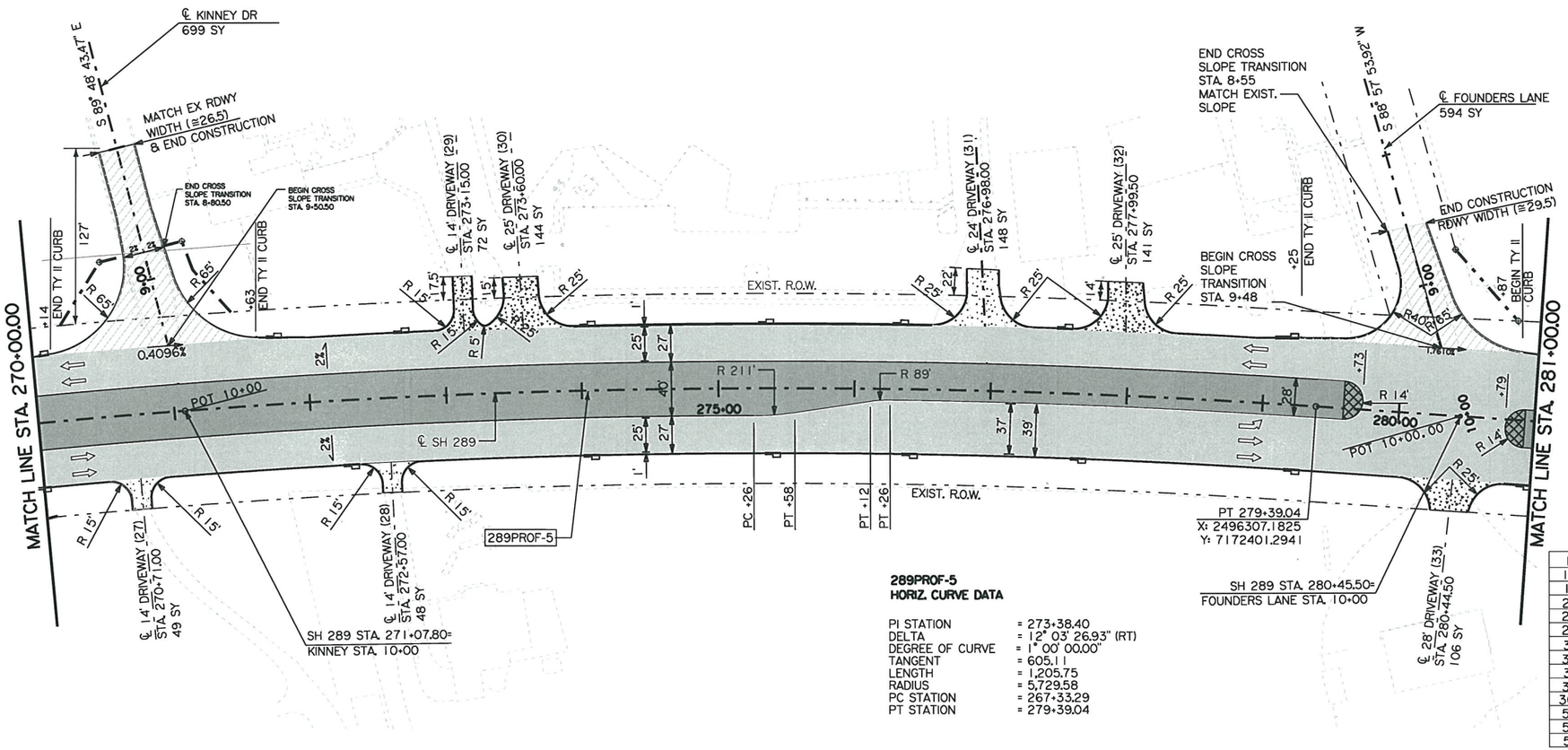

289PROF-5
HORIZ. CURVE DATA

PI STATION	= 273+38.40
DELTA	= 12° 03' 26.93" (RT)
DEGREE OF CURVE	= 1° 00' 00.00"
TANGENT	= 605.11
LENGTH	= 1,205.75
RADIUS	= 5,729.58
PC STATION	= 267+33.29
PT STATION	= 279+39.04

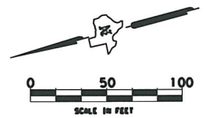

LEGEND

- XXXX — POINT NUMBERS
- XXXX — CURVE NUMBERS
- ASPHALT
- CONCRETE DRIVEWAY
- SEEDING AND FERTILIZER
- CONCRETE RDWY
- CONCRETE MEDIAN
- RIGHT OF WAY MARKER

NOTE:
SEE MISCELLANEOUS DETAIL SHEET FOR INTERSECTION TAPER DETAIL.
- USE 4(35'x35') HES CONC (KENNY DR & FOUNDERS LANE CONSTRUCTION)
- SEE TCP DETAIL INTERSECTIONS

ITEM NO.	DESCRIPTION	UNIT	SHEET TOTAL
164-2039	DRILL SEEDING (PERM) (URBAN) (CLAY)	SY	8745
168-2001	VEGETATIVE WATERING	MG	253.0
260-2043	LIME (HYD. COM OR QK) (SLURRY)	TON	147
260-2006	LIME TRT (EXST MATL) (6")	SY	1396
260-2027	LIME TRT (EXST MATL) (8")	SY	8967
340-2011	D - GR HMA (METH) TY - B PG64 22	TON	2309
340-2050	D - GR HMA (METH) TY - C PG70 22	TON	144
360-2001	CONC PVMT (CONT REINF - CRCP) (8")	SY	8031
360-2018	CURB (TY II)	LF	4081
360-2044*	CONC PVMT (CONT REINF - CRCP) (8") (HES)	SY	544
530-2038	DRIVEWAYS (CONC) (HES)	SY	708
536-2002	CONC MEDIAN	SY	68
538-2001	RIGHT OF WAY MARKERS	EA	6

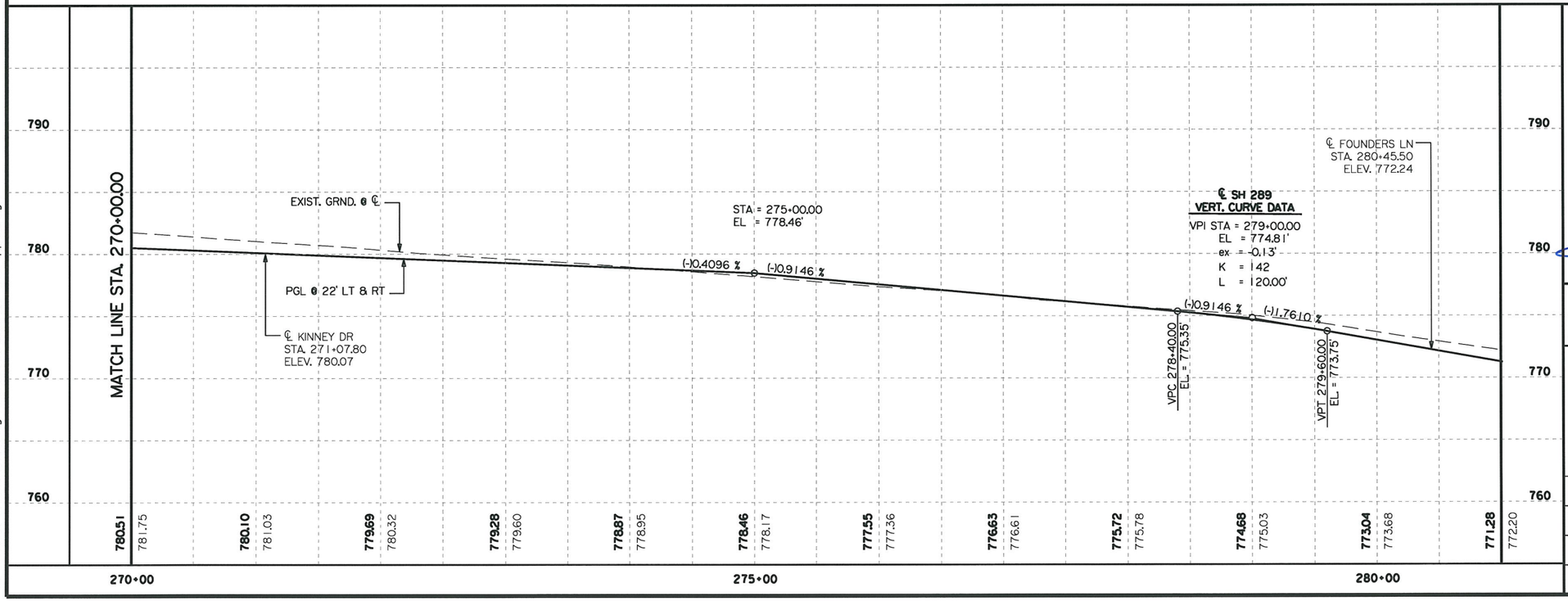

STATE OF TEXAS
HASSAN SAM MOGHADASSI
84231
LICENSED
PROFESSIONAL ENGINEER

H. Moghadassi , P.E. 12/29/11
Signature of Registrant & Date

$FILES$

Texas Department of Transportation
© 2011

SH 289
FM 455 TO N BUS 289C
PLAN PROFILE
STA. 270+00 TO STA. 281+00

SCALE: HORIZ: 1"=100'
VERT: 1"=10'

SHEET 15 OF 18

DESIGN	FED.RD. DIV.NO.	FEDERAL AID PROJECT NO.		HIGHWAY NO.
SHM	6	SEE TITLE SHEET		SH 289
GRAPHICS OE	STATE	DISTRICT	COUNTY	SHEET NO.
CHECK SM	TEXAS	DALLAS	COLLIN	
CHECK	CONTROL	SECTION	JOB	129
	0091	03	P-201107-01	

$FILEABBREV$

12/29/2011
T:\DALDGN*S\SH289\Design\sheets\PLN&PROF\new*pp15.dgn

TXDOT
100.0000 ft / IN.

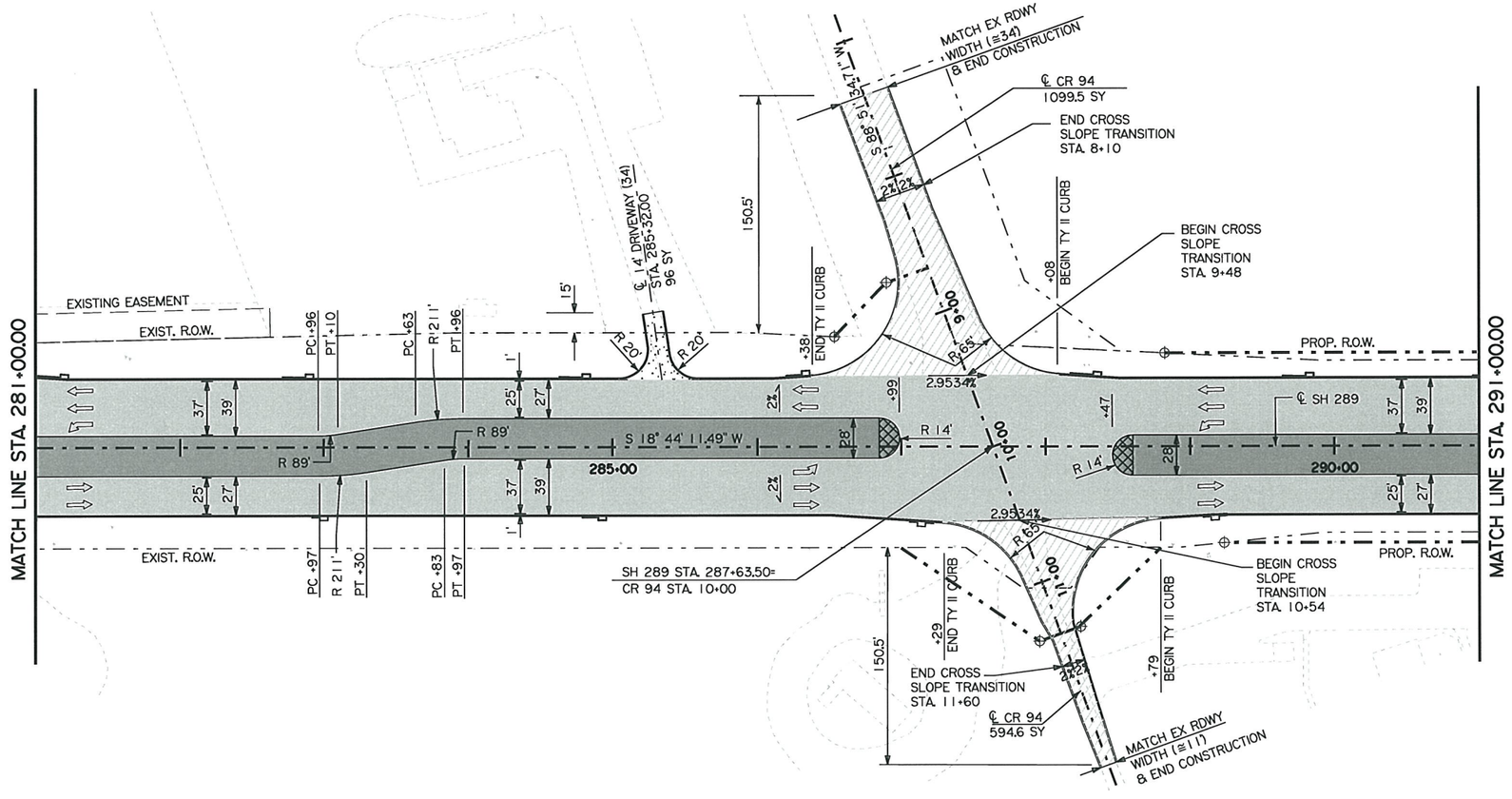

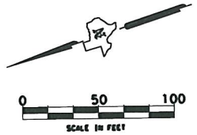

LEGEND

- XXXX — POINT NUMBERS
- XXXX — CURVE NUMBERS
- ASPHALT
- CONCRETE DRIVEWAY
- SEEDING AND FERTILIZER
- CONCRETE RDWY
- CONCRETE MEDIAN
- RIGHT OF WAY MARKER

NOTE:
SEE MISCELLANEOUS DETAIL SHEET FOR INTERSECTION TAPER DETAIL.

* USE 4(30'x30') HES CONC (CR 94 CONSTRUCTION)

ITEM NO.	DESCRIPTION	UNIT	SHEET TOTAL
164-2039	DRILL SEEDING (PERM) (URBAN) (CLAY)	SY	9261
168-2001	VEGETATIVE WATERING	MG	267.9
260-2043	LIME (HYD, COM OR QK) (SLURRY)	TON	154
260-2006	LIME TRT (EXST MATL) (6')	SY	1984
260-2027	LIME TRT (EXST MATL) (8')	SY	9047
340-2011	D - GR HMA (METH) TY - B PG64 22	TON	2505
340-2050	D - GR HMA (METH) TY - C PG70 22	TON	191
360-2001	CONC PVMT (CONT REINF - CRCP) (8")	SY	8219
360-2018	CURB (TY II)	LF	3476
360-2044*	CONC PVMT (CONT REINF - CRCP) (8") (HES)	SY	400
530-2038	DRIVEWAYS (CONC) (HES)	SY	96
536-2002	CONC MEDIAN	SY	62
538-2001	RIGHT OF WAY MARKERS	EA	6

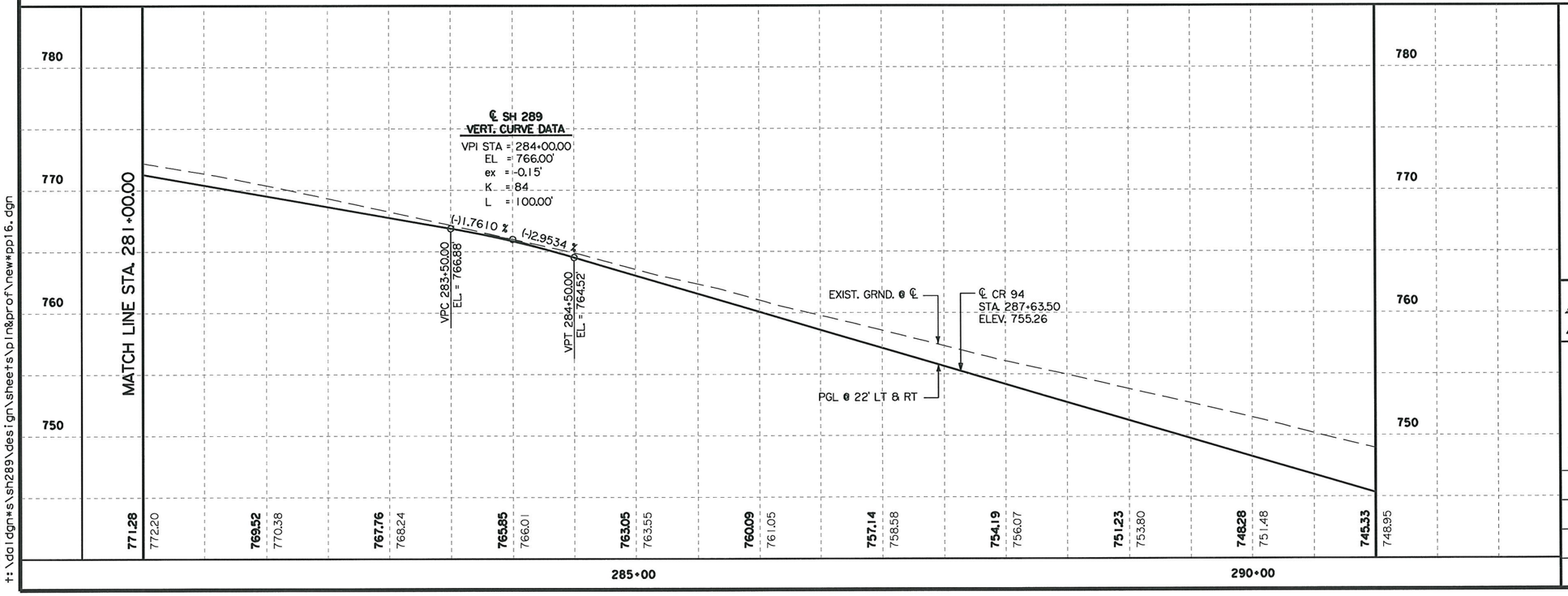

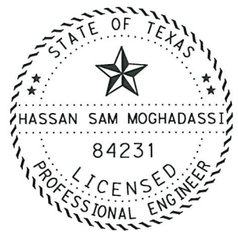

H. Moghadassi , P.E. 7/12/11
Signature of Registrant & Date

new*pp16.dgn

Texas Department of Transportation
© 2011

SH 289
FM 455 TO N BUS 289C
PLAN PROFILE
STA. 281+00 TO STA. 291+00

SCALE: HORIZ: 1"=100'
VERT: 1"=10'

SHEET 16 OF 18

DESIGN	FED. RD. DIV. NO.	FEDERAL AID PROJECT NO.		HIGHWAY NO.
SHM	6	SEE TITLE SHEET		SH 289
GRAPHICS OE	STATE	DISTRICT	COUNTY	SHEET NO.
CHECK SM	TEXAS	DALLAS	COLLIN	130
CHECK	CONTROL	SECTION	JOB	
	0091	03	201	

P-201107-01

7/11/2011
...\sheets\pln&prof\new*pp16.dgn
t:\dal\dgn*s\sh289\design\sheets\pln&prof\new*pp16.dgn

$USER$
$SCALE$

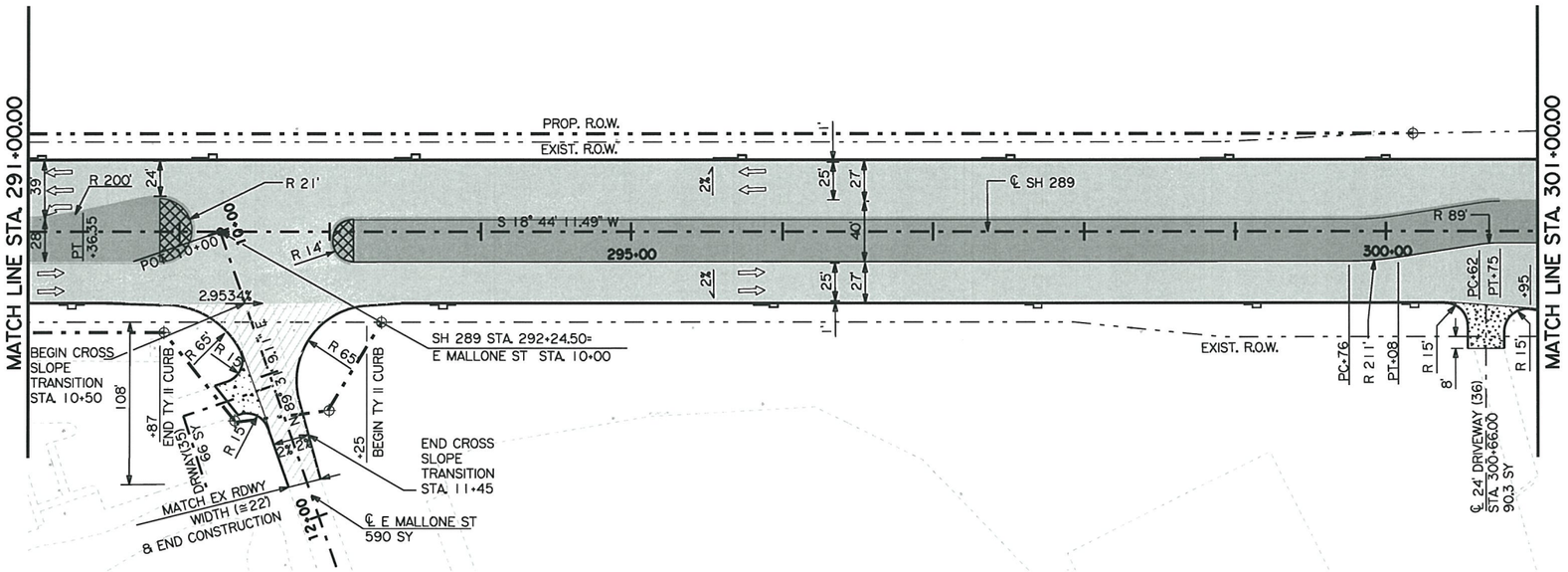

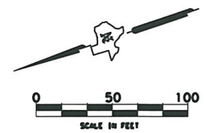

LEGEND

- XXXX — POINT NUMBERS
- XXXX — CURVE NUMBERS
- ASPHALT
- CONCRETE DRIVEWAY
- SEEDING AND FERTILIZER
- CONCRETE RDWY
- RIGHT OF WAY MARKER

NOTE:
SEE MISCELLANEOUS DETAIL SHEET
FOR INTERSECTION TAPER DETAIL.
- USE 2(30'x30') HES CONC (E MALLONE ST CONSTRUCTION)

ITEM NO.	DESCRIPTION	UNIT	SHEET TOTAL
164-2039	DRILL SEEDING (PERM) (URBAN) (CLAY)	SY	7913
168-2001	VEGETATIVE WATERING	MG	228.9
260-2043	LIME (HYD. COM OR QK) (SLURRY)	TON	118
260-2006	LIME TRT (EXST MATL) (6")	SY	615
260-2027	LIME TRT (EXST MATL) (8")	SY	7494
340-2011	D - GR HMA (METH) TY - B PG64 22	TON	1742
340-2050	D - GR HMA (METH) TY - C PG70 22	TON	60
360-2001	CONC PVMT (CONT REINF - CRCP) (8")	SY	6753
360-2018	CURB (TY II)	LF	3884
360-2044*	CONC PVMT (CONT REINF - CRCP) (8") (HES)	SY	200
530-2038	DRIVEWAYS (CONC) (HES)	SY	156.3
538-2001	RIGHT OF WAY MARKERS	EA	5

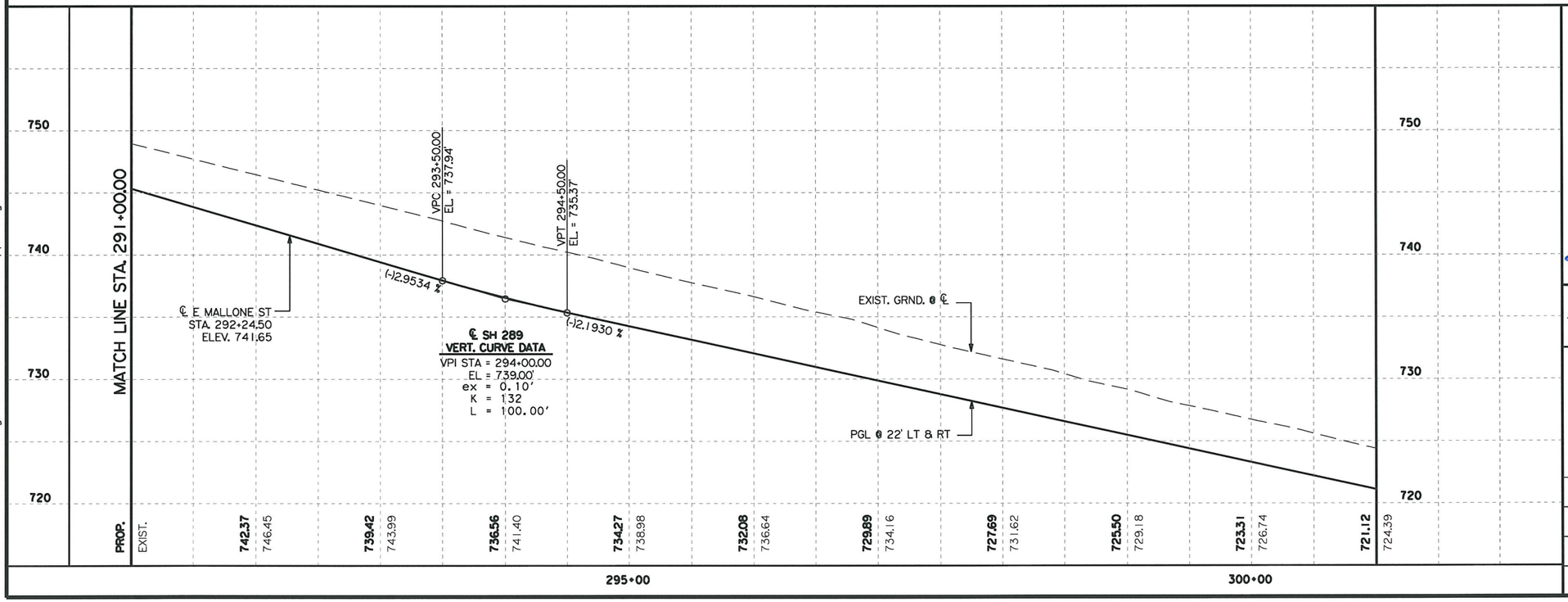

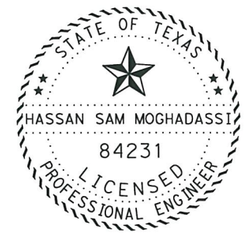

H. Moghadassi, P.E. 12/29/11
Signature of Registrant & Date

$FILES$

Texas Department of Transportation
© 2011

SH 289
FM 455 TO N BUS 289C
PLAN PROFILE
STA. 291+00 TO STA. 301+00

SCALE: HORIZ: 1"=100'
VERT: 1"=10'

SHEET 17 OF 18

DESIGN	FED. RD. DIV. NO.	FEDERAL AID PROJECT NO.		HIGHWAY NO.
SHM	6	SEE TITLE SHEET		SH 289
GRAPHICS	STATE	DISTRICT	COUNTY	SHEET NO.
OE	TEXAS	DALLAS	COLLIN	131
CHECK	CONTROL	SECTION	JOB	
SM	0091	03	P 201107-01	
CHECK				

$FILEABBREV$

12/29/2011
T:\DALDGN#S\SH289\Design\sheets\PLN&PROF\new#pp17.dgn

TXDOT
100.0000 ft / IN.

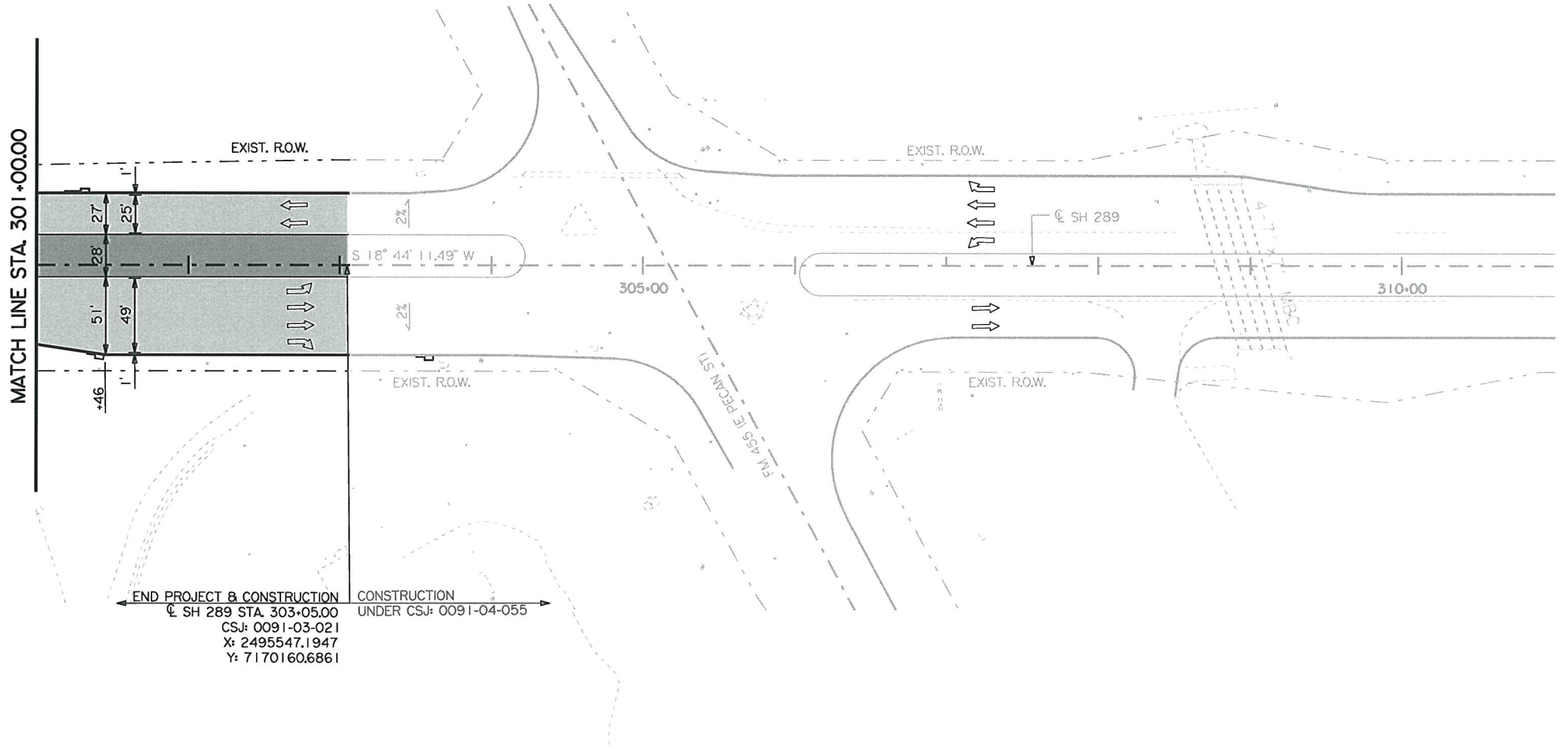

0 50 100
SCALE IN FEET

LEGEND

- XXXX — POINT NUMBERS
- XXXX — CURVE NUMBERS
- ASPHALT
- CONCRETE DRIVEWAY
- SEEDING AND FERTILIZER
- CONCRETE RDWY

NOTE:
SEE MISCELLANEOUS DETAIL SHEET
FOR INTERSECTION TAPER DETAIL.

ITEM NO.	DESCRIPTION	UNIT	SHEET TOTAL
164-2039	DRILL SEEDING (PERM) (URBAN) (CLAY)	SY	1312
168-2001	VEGETATIVE WATERING	MG	37.9
260-2043	LIME (HYD, COM OR QK) (SLURRY)	TON	30
260-2027	LIME TRT (EXST MATL) (8")	SY	2002
340-2011	D - GR HMA (METH) TY - B PG64 22	TON	420
360-2001	CONC PVMT (CONT REINF - CRCP) (8")	SY	1820
360-2018	CURB (TY II)	LF	821

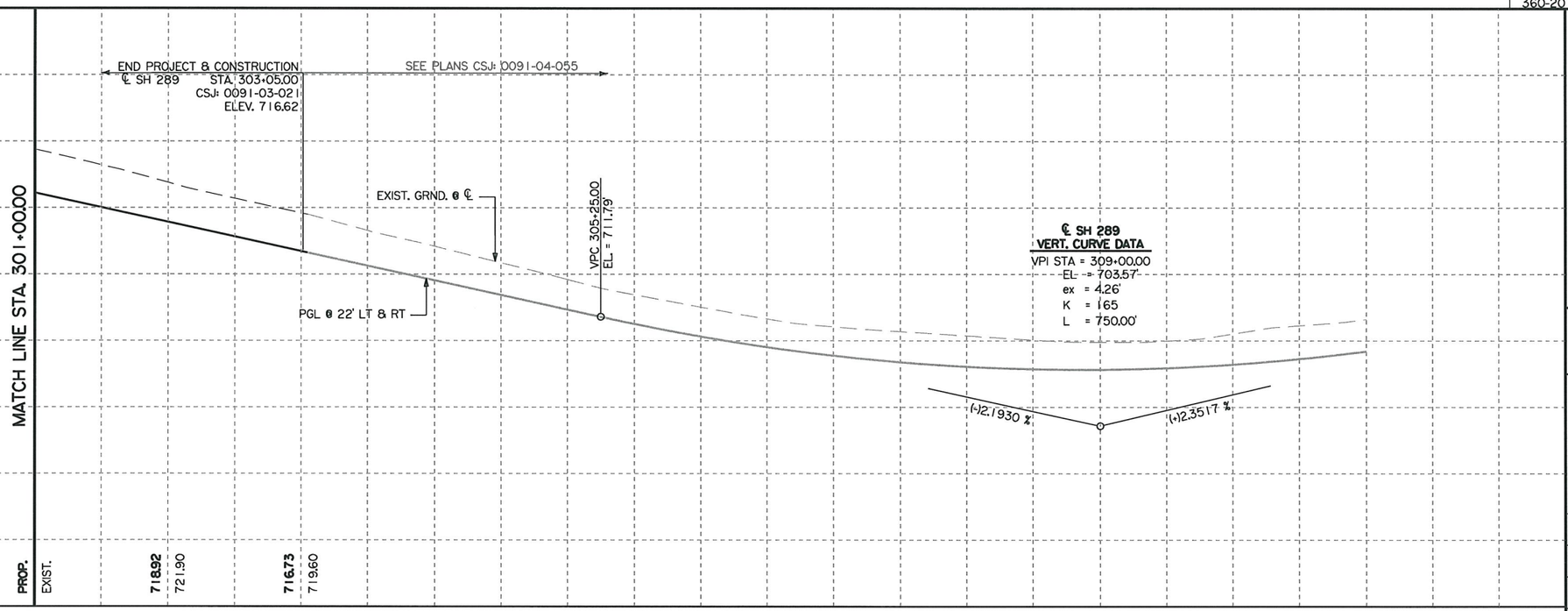

STATE OF TEXAS
HASSAN SAM MOGHADASSI
84231
LICENSED
PROFESSIONAL ENGINEER

H. Moghadassi, P.E. 7/12/11
Signature of Registrant & Date

new*pp18.dgn

Texas Department of Transportation
© 2011

SH 289
FM 455 TO N BUS 289C
PLAN PROFILE
STA. 301+00 TO END CONSTRUCTION

SCALE: HORIZ: 1"=100'
VERT: 1"=10'

SHEET 18 OF 18

DESIGN	FED. RD. DIV. NO.	FEDERAL AID PROJECT NO.		HIGHWAY NO.
SHM	6	SEE TITLE SHEET		SH 289
GRAPHICS	STATE	DISTRICT	COUNTY	SHEET NO.
OE	TEXAS	DALLAS	COLLIN	
CHECK	CONTROL	SECTION	JOB	132
SM	0091	03	P-201107-01	
CHECK				

7/11/2011
t:\dal\dgn*s\sh289\design\sheets\pln&prof\new*pp18.dgn
...\sheets\pln&prof\new*pp18.dgn

TXDOT
20.0000 ft / IN.

CSJ: 0091-03-021
BEGIN STA STA. 121+00.00
END STA STA. 303+05.00

DRIVEWAYS					CENTERLINE	PROPOSED PGL	6" SUBGRADE	6" SUBGRADE	6" SUBGRADE	REQUIRED
NO.	SHEET NO.	RADIUS (FT)	WIDTH (FT)	AREA (SY)	STATION	ELEVATION (FT)	FLEX BASE (SY)*	LIME (TON)*	L.T.S (SY)*	DISTANCE BEYOND ROW
1	2 OF 14	10	22	227.20	121+94.00	710.56	66	--	--	--
2	2 OF 14	RT 9 LT 9.64	24	48.30	132+60.00	736.13	15	--	--	--
3	2 OF 14	15	14	128	133+87.00	732.92	46	--	--	--
4	3 OF 14	50	58	535	146+95.00	754.54	--	7	537	--
5	4 OF 14	15	9	36	153+06.00	740.70	--	1	36	--
6	4 OF 14	15	14	82	162+21.00	726.96	--	1	88	20.50
7	4 OF 14	15	14	54	188+38.50	730.66	--	1	56	7.00
8	4 OF 14	15	14	54	188+38.50	730.66	--	1	63	--
9	5 OF 14	RT 10 LT 15	14	72	206+93.50	757.91	--	1	56	--
10	5 OF 14	15	14	126	207+14.00	757.65	--	2	139	25.00
11	5 OF 14	RT 15 LT 10	14	81.34	207+29.00	757.46	--	1	62	--
12	6 OF 14	15	24	109	228+73.00	736.07	--	2	113	--
13	6 OF 14	15	14	75	229+02.50	737.18	--	1	81	3.00
14	6 OF 14	15	14	44	240+82.50	767.83	--	1	45	--
15	7 OF 14	15	14	57	241+06.00	768.10	--	1	59	--
16	7 OF 14	15	23	301	245+92.00	773.77	--	4	321	47.50
17	7 OF 14	15	14	46	250+01.00	778.54	--	1	47	--
18	8 OF 14	15	14	53	250+06.50	778.61	--	1	55	--
19	8 OF 14	15	14	74	255+78.00	784.18	--	1	80	16.00
20	8 OF 14	10	7	23.50	259+65.00	786.17	--	1	26	--
21	9 OF 14	15	14	49	263+85.00	783.77	--	1	50	--
22	9 OF 14	15	14	48	264+10.00	783.60	--	1	50	--
23	9 OF 14	25	28	106	265+93.50	782.29	--	2	106	--
24	10 OF 14	15	14	48	266+09.00	782.18	--	1	50	--
25	10 OF 14	15	16	166	268+09.50	780.79	--	3	180	43.00
26	10 OF 14	15	14	113.60	269+61.80	780.17	--	2	124	34.00
27	11 OF 14	15	14	49	270+71.00	779.72	--	1	51	--
28	11 OF 14	15	14	48	272+57.00	778.96	--	1	50	--
29	11 OF 14	15	14	72	273+15.00	778.72	--	1	82	17.50
30	12 OF 14	25	25	144	273+60.00	778.54	--	2	146	15.00
31	12 OF 14	25	24	148	276+98.00	776.27	--	2	151	22.00
32	12 OF 14	25	25	141	277+99.50	775.22	--	2	144	14.00
33	13 OF 14	25	28	106	280+44.50	771.76	--	2	105	--
34	13 OF 14	20	14	96	285+32.00	761.59	--	2	103	15.00
35	14 OF 14	15	24	66	11+08.00**	740.32	--	1	67	--
36	14 OF 14	15	24	91	300+66.00	721.32	--	2	92	8.00

**DRWAY 35 IS CONTROLLED BY MALLONE STREET CL

* FOR CONTRACTOR'S INFORMATION

STATE OF TEXAS
SUJA G. MATHEW
79690
LICENSED
PROFESSIONAL ENGINEER

Suja G. Mathew, P.E. 7/11/2011
Signature of Registrant & Date

Texas Department of Transportation
© 2011

SH 289

DRIVEWAYS DATA

Sheet 1 of 14

DESIGN	FED.RD. DIV.NO.	STATE PROJECT NO.			HIGHWAY NO.
SM	6	SEE TITLE SHEET			SH 289
GRAPHICS OE	STATE	DISTRICT	COUNTY		SHEET NO.
CHECK SHM	TEXAS	DALLAS	COLLIN		133
CHECK	CONTROL	SECTION	JOB		
	0091	03	020		

P-201107-01

7/11/2011
I:\dal\dgn\s\sh289\design\sheets\drwy\021DRWY02-No2.dgn
...\sheets\drwy\021DRWY02-No2.dgn

TXDOT
20.0000 ft / IN.

℄ SH 289

780
770
760
750
740

END CONSTRUCTION
(121'LT)
EL=746.88

PVI=69' LT OF GL
EL=746.72
VC=8'

PVI=0+21.5
EL=741.0
NO VC

PVI=0+13.5
EL=740.2
VC=8'
PVI=0+31

ROW

4.0%
12.0%
10.0%
2.0%

STA=0+8.5
EL=740.09

GUTTER LINE (GL) 47' LT

STA=0+00
EL=739.92

CONTROLLED BY RDWY PROFILE
MATCH RDWY SLOPE (2% TYP)

(DRWAY 3) 133+87.00

℄ SH 289

770
760
750
740
730

CONTROLLED BY RDWY PROFILE
MATCH RDWY SLOPE (2% TYP)

GUTTER LINE (GL) (59')
ELE=736.13'

PVI=5' RT OF GL
ELE=735.97
VC=4'

END CONSTRUCTION 80' RT OF SH 289
EL=734.80

ROW

2%
7.3%

(DRWAY 2) 132+60.00

℄ SH 289

740
730
720
710
700

CONTROLLED BY RDWY PROFILE
MATCH RDWY SLOPE (2% TYP)

GUTTER LINE (GL) (22')
ELE=710.56

PVI=28' RT OF GL
ELE=710.00
VC=10'

PVI=58' RT OF GL
ELE=706.69
NO VC

PVI=85' RT OF GL
ELE=704.04
VC=10'

END CONSTRUCTION 113' RT OF SH 289 ℄
EL=704.02 (MATCH EXIST. ELE)

ROW

(-)12%
(-)11.03%
(-)19.81%
(-)10.33%

(DRWAY 1) 121+94.00

140 130 120 110 100 90 80 70 60 50 40 30 20 10 0 10 20 30 40 50 60 70 80 90

STATE OF TEXAS
SUJA G. MATHEW
79690
LICENSED
PROFESSIONAL ENGINEER

Signature of Registrant & Date P.E. 7/11/2011

DRIVEWAY PROFILES

SCALE: 1"= 20' H & V

Sheet 2 of 14

DESIGN	FED. RD. DIV. NO.	STATE PROJECT NO.		HIGHWAY NO.
SM	6	SEE TITLE SHEET		SH 289
GRAPHICS OE	STATE	DISTRICT	COUNTY	SHEET NO.
CHECK SHM	TEXAS	DALLAS	COLLIN	134
CHECK	CONTROL	SECTION	JOB	
	0091	03	P-201107-01	

7/11/2011
t:\dal\dgn\s\sh289\design\sheets\drwy\021DRWY02-No2.dgn

...\sheets\drwy\021DRWY02-No2.dgn

TXDOT
20.0000 ft / IN.

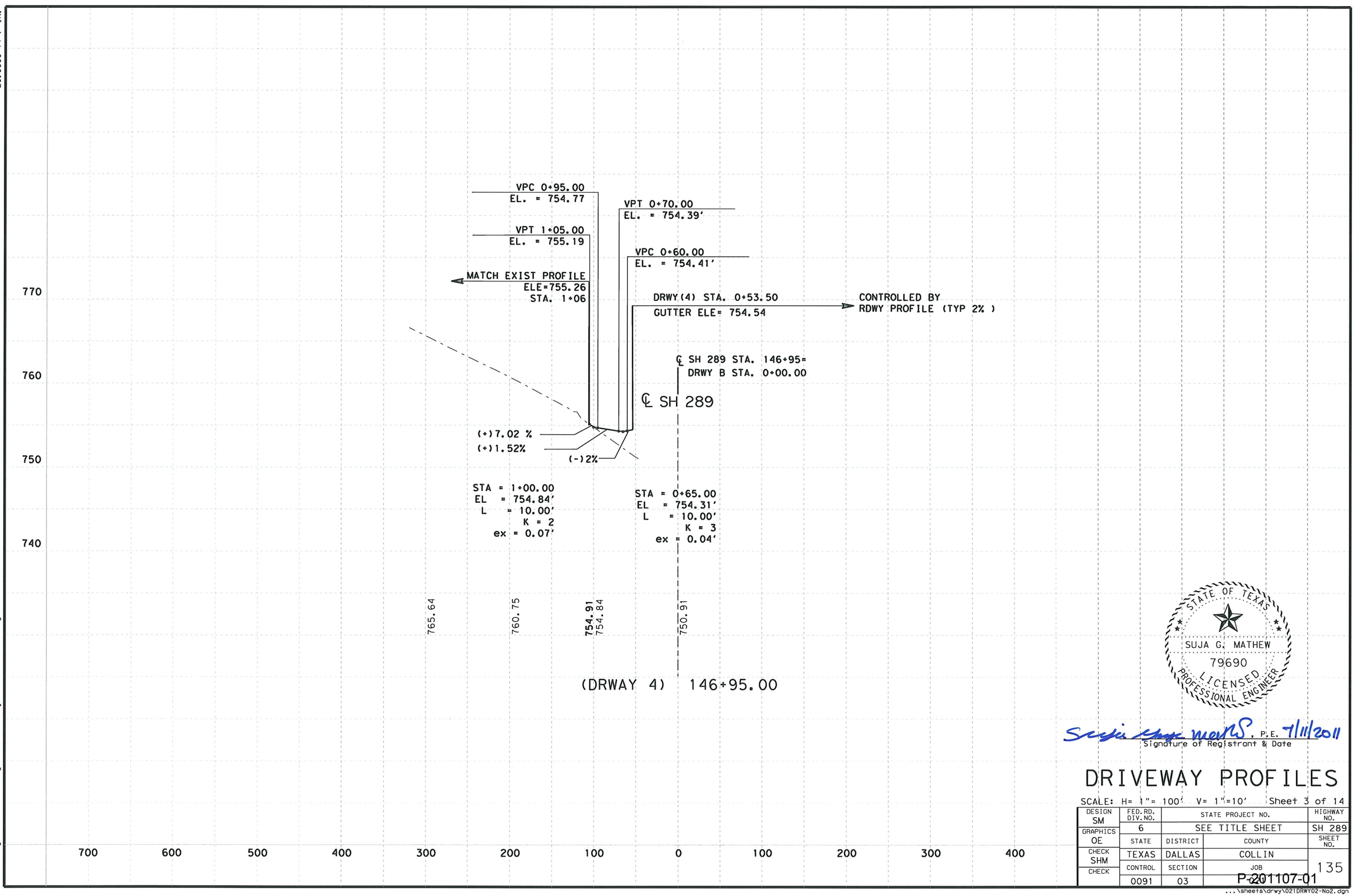

SUJA G. MATHEW
79690
LICENSED
PROFESSIONAL ENGINEER
STATE OF TEXAS

Signature of Registrant & Date, P.E. 7/11/2011

DRIVEWAY PROFILES

SCALE: H= 1"= 100' V= 1"=10' Sheet 3 of 14

DESIGN	FED.RD. DIV.NO.	STATE PROJECT NO.		HIGHWAY NO.
SM	6	SEE TITLE SHEET		SH 289
GRAPHICS	STATE	DISTRICT	COUNTY	SHEET NO.
OE	TEXAS	DALLAS	COLLIN	
CHECK	CONTROL	SECTION	JOB	135
SHM	0091	03	P-201107-01	
CHECK				

7/11/2011
+:\dal\dgn\s\sh289\design\sheets\drwy\021DRWY02-No2.dgn

...\sheets\drwy\021DRWY02-No2.dgn

TXDOT
20.0000 ft / IN.

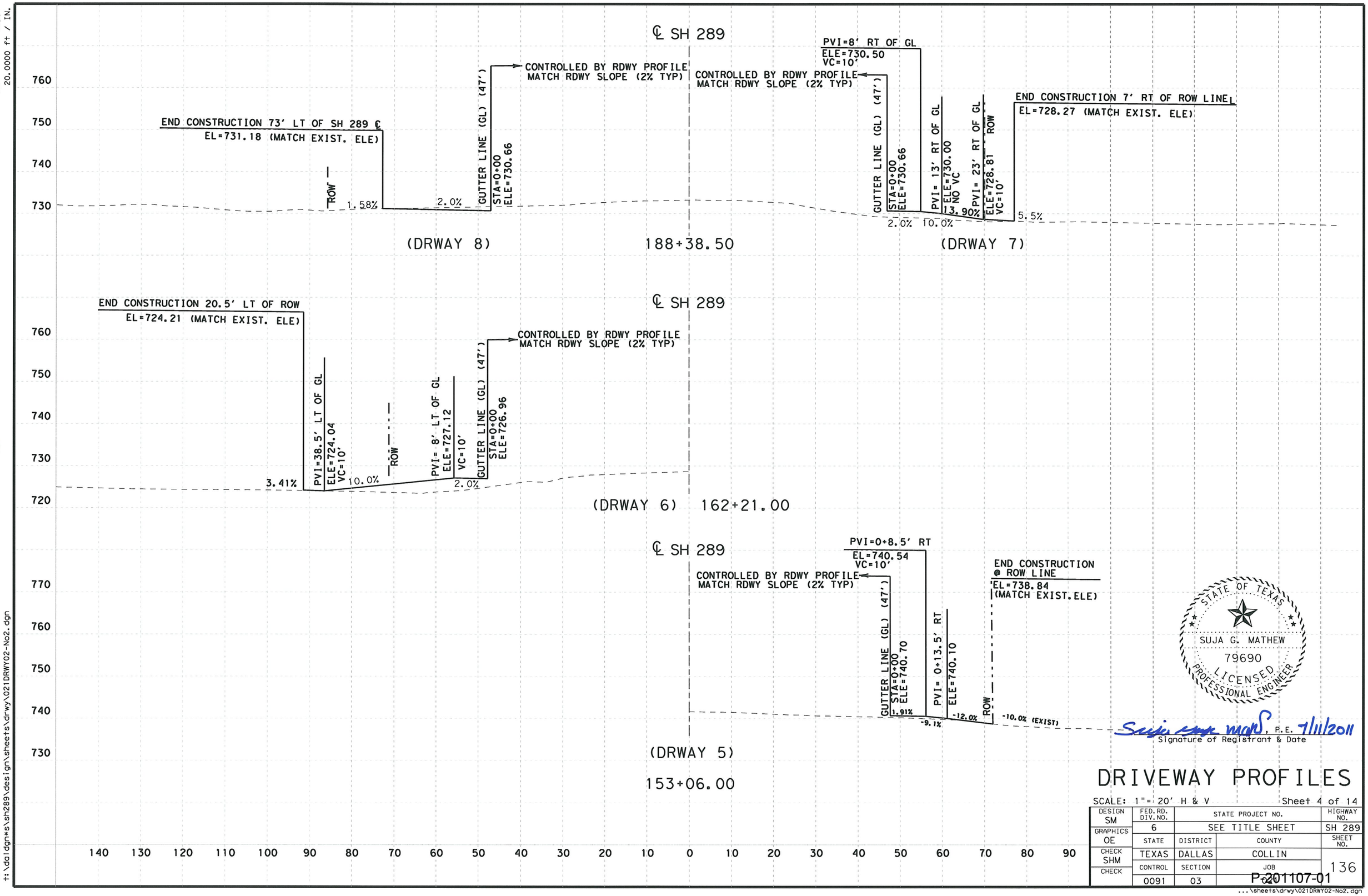

STATE OF TEXAS
SUJA G. MATHEW
79690
LICENSED
PROFESSIONAL ENGINEER

Signature of Registrant & Date 7/11/2011

DRIVEWAY PROFILES

SCALE: 1"= 20' H & V

DESIGN	FED. RD. DIV. NO.	STATE PROJECT NO.		HIGHWAY NO.
SM	6	SEE TITLE SHEET		SH 289
GRAPHICS	STATE	DISTRICT	COUNTY	SHEET NO.
OE	TEXAS	DALLAS	COLLIN	136
CHECK SHM	CONTROL	SECTION	JOB	
CHECK	0091	03	P-201107-01	

7/11/2011
t:\dal\dgn\s\sh289\design\sheets\drwy\021DRWY02-No2.dgn
...\sheets\drwy\021DRWY02-No2.dgn

TXDOT
20.0000 ft / IN.

℄ SH 289

PVI= 8' LT OF GL
ELE=757.62 NO VC

CONTROLLED BY RDWY PROFILE
MATCH RDWY SLOPE (2% TYP)

END CONSTRUCTION 78' LT OF SH 289 ℄
EL=757.23 (MATCH EXIST. ELE)

ROW

PVI= 26.5' LT OF GL
ELE=756.70
NO VC

GUTTER LINE (GL) (47')
STA=0+00
ELE=757.46

780
770
760
750

2.79%
4.97%
2.0%

(DRWAY 11) 207+29.00

℄ SH 289

PVI=8' RT OF GL
ELE=757.49
VC=10'

CONTROLLED BY RDWY PROFILE
MATCH RDWY SLOPE (2% TYP)

GUTTER LINE (GL) (47')
STA=0+00
ELE=757.65

PVI= 13' RT OF GL
ELE=756.99 NO VC

PVI=42' RT OF GL
ELE=752.48
VC=10'

ROW

END CONSTRUCTION
25' RT OF ROW
EL=750.85
(MATCH EXIST. ELE)

790
780
770
760
750

2.0% 10.0% 10.3%

(DRWAY 10) 207+14.00

℄ SH 289

CONTROLLED BY RDWY PROFILE
MATCH RDWY SLOPE (2% TYP)

PVI= 13' LT OF GL
ELE=758.07 VC=10'

END CONSTRUCTION 88' LT OF SH 289 ℄
EL=756.53 (MATCH EXIST. ELE)

ROW

PVI= 23' LT OF GL
ELE=756.60
VC=10'

GUTTER LINE (GL) (47')
STA=0+00
ELE=757.91

790
780
770
760
750

0.24%
10.0%
2.0%

(DRWAY 9)
206+93.50

140 130 120 110 100 90 80 70 60 50 40 30 20 10 0 10 20 30 40 50 60 70 80 90

STATE OF TEXAS
SUJA G. MATHEW
79690
LICENSED
PROFESSIONAL ENGINEER

Suja G. Mathew, P.E. 7/11/2011
Signature of Registrant & Date

DRIVEWAY PROFILES

SCALE: 1"= 20' H & V

Sheet 5 of 14

DESIGN	FED.RD. DIV.NO.	STATE PROJECT NO.		HIGHWAY NO.
SM	6	SEE TITLE SHEET		SH 289
GRAPHICS OE	STATE	DISTRICT	COUNTY	SHEET NO.
CHECK SHM	TEXAS	DALLAS	COLLIN	
CHECK	CONTROL	SECTION	JOB	137
	0091	03	P-201107-01	

7/11/2011
t:\dal\dgn\sh289\design\sheets\drwy\021DRWY02-No2.dgn

...\sheets\drwy\021DRWY02-No2.dgn

TXDOT
20.0000 ft / IN.

℄ SH 289

CONTROLLED BY RDWY PROFILE
MATCH RDWY SLOPE (2% TYP)

GUTTER LINE (GL) (47')
STA=0+00
ELE=767.83

PVI= 8' RT OF GL
ELE=767.67 VC=10'

PVI=16' RT OF GL
ELE=768.19
NO VC

END CONSTRUCTION 67' RT OF SH 289 ℄
EL=768.05 (MATCH EXIST. ELE)

ROW

2.0% 6.54% 4.48%

(DRWAY 14) 240+82.90

℄ SH 289

CONTROLLED BY RDWY PROFILE
MATCH RDWY SLOPE (2% TYP)

GUTTER LINE (GL) (47')
STA=0+00
ELE=737.18

PVI= 8' LT OF GL
ELE=737.34 VC=8'

PVI= 12.5' LT OF GL
ELE=737.80 VC=8'

PVI= 36' LT OF GL
ELE=740.60 VC=8'

END CONSTRUCTION 3' LT OF ROW LINE
EL=740.87 (MATCH EXIST. ELE)

ROW

6.5% 12.0 10.0% 2.0%

(DRWAY 13) 229+02.50

℄ SH 289

CONTROLLED BY RDWY PROFILE
MATCH RDWY SLOPE (2% TYP)

GUTTER LINE (GL) (47')
STA=0+00
ELE=736.07

PVI=8' RT OF GL
ELE=736.23
VC=10'

PVI= 30' RT OF GL
ELE=738.42
VC=10'

ROW

END CONSTRUCTION 83' RT OF SH 289 ℄
EL=738.54 (MATCH EXIST. ELE)

2.0% 10.0% 2.0%

(DRWAY 12) 228+73.00

790 780 770 760 750 740 730

140 130 120 110 100 90 80 70 60 50 40 30 20 10 0 10 20 30 40 50 60 70 80 90

STATE OF TEXAS
SUJA G. MATHEW
79690
LICENSED
PROFESSIONAL ENGINEER

Suja G. Mathew, P.E. 7/11/2011
Signature of Registrant & Date

DRIVEWAY PROFILES

SCALE: 1"= 20' H & V

DESIGN	FED. RD. DIV. NO.	STATE PROJECT NO.		HIGHWAY NO.
SM	6	SEE TITLE SHEET		SH 289
GRAPHICS OE	STATE	DISTRICT	COUNTY	SHEET NO.
CHECK SHM	TEXAS	DALLAS	COLLIN	138
CHECK	CONTROL	SECTION	JOB	
	0091	03	P.201107-01	

7/11/2011
t:\dal\dgn\s\sh289\design\sheets\drwy\021DRWY02-No2.dgn

TXDOT
20.0000 ft / IN.

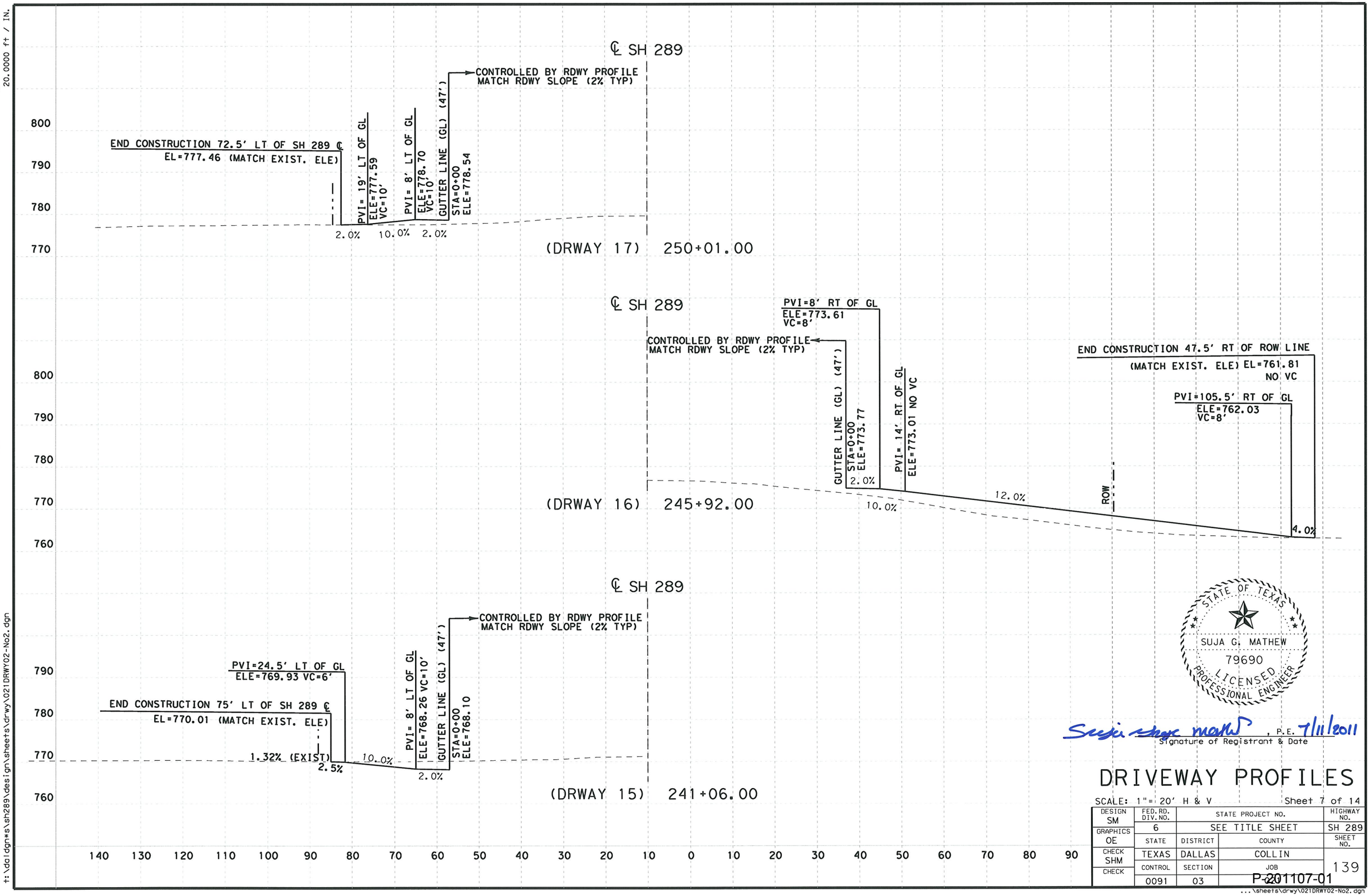

STATE OF TEXAS
SUJA G. MATHEW
79690
LICENSED
PROFESSIONAL ENGINEER

Suja Mathew , P.E. 7/11/2011
Signature of Registrant & Date

DRIVEWAY PROFILES

SCALE: 1"= 20' H & V

DESIGN	FED. RD. DIV. NO.	STATE PROJECT NO.		HIGHWAY NO.
SM	6	SEE TITLE SHEET		SH 289
GRAPHICS OE	STATE	DISTRICT	COUNTY	SHEET NO.
CHECK SHM	TEXAS	DALLAS	COLLIN	139
CHECK	CONTROL	SECTION	JOB	
	0091	03	P-201107-01	

7/11/2011
t:\dal\dgn\sh289\design\sheets\drwy\021DRWY02-No2.dgn

...\sheets\drwy\021DRWY02-No2.dgn

TXDOT 20.0000 ft / IN.

℄ SH 289

PVI=6' RT OF GL
ELE=786.39
VC=5'

CONTROLLED BY RDWY PROFILE
MATCH RDWY SLOPE (2% TYP)

GUTTER LINE (GL) (49.9')
ELE=786.18

PVI= 17' RT OF GL
ELE=787.13
VC=5'

END CONSTRUCTION
71.20' RT OF SH 289 ℄
EL=787.05
(MATCH EXIST. ELE)

ROW

6.73%
1.96%
1.90%

(DRWAY 20) 259+65.00

℄ SH 289

PVI= 8' LT OF GL
ELE=784.34 VC=10'

CONTROLLED BY RDWY PROFILE
MATCH RDWY SLOPE (2% TYP)

END CONSTRUCTION 16' LT OF SH 289 ROW
EL=787.08 (MATCH EXIST. ELE)

PVI= 34.3' LT OF GL
ELE=786.97
VC=10'

ROW

GUTTER LINE (GL) (47')
STA=0+00
ELE=784.18

2.0%
10.0%
2.0%

(DRWAY 19) 255+78.00

℄ SH 289

CONTROLLED BY RDWY PROFILE
MATCH RDWY SLOPE (2% TYP)

PVI=8' RT OF GL
ELE=778.77
VC=10'

GUTTER LINE (GL) (47')
STA=0+00
ELE=778.61

PVI=17' RT OF GL
ELE=777.87
VC=8'

END CONSTRUCTION 68' RT OF SH 289 ℄
EL=778.00 (MATCH EXIST. ELE)
NO VC

ROW

9.2%
2.0%
2.0% (EXIST)
2.0%

(DRWAY 18) 250+06.50

STATE OF TEXAS
SUJA G. MATHEW
79690
LICENSED
PROFESSIONAL ENGINEER

Signature of Registrant & Date , P.E. 7/11/2011

DRIVEWAY PROFILES

SCALE: 1"= 20' H & V

Sheet 8 of 14

DESIGN	FED.RD. DIV.NO.	STATE PROJECT NO.		HIGHWAY NO.
SM	6	SEE TITLE SHEET		SH 289
GRAPHICS	STATE	DISTRICT	COUNTY	SHEET NO.
OE	TEXAS	DALLAS	COLLIN	
CHECK	CONTROL	SECTION	JOB	
SHM	0091	03	220	140
CHECK				

P-201107-01

7/11/2011
t:\dal\dgn\sh289\design\sheets\drwy\021DRWY02-No2.dgn

...\sheets\drwy\021DRWY02-No2.dgn

TXDOT
20.0000 ft / IN.

℄ SH 289

CONTROLLED BY RDWY PROFILE
MATCH RDWY SLOPE (2% TYP)

END CONSTRUCTION @ ROW
EL=782.29 (MATCH EXIST. ELE)

ROW

PVI= 8' LT OF GL
ELE=782.45 NO VC

GUTTER LINE (GL) (47')
STA=0+00
ELE=782.29

1.07%

2.0%

(DRWAY 23) 265+93.50

℄ SH 289

PVI= 8' LT OF GL
ELE=783.76
VC=10'

CONTROLLED BY RDWY PROFILE
MATCH RDWY SLOPE (2% TYP)

PVI= 18' LT OF GL
ELE=784.74
VC=10'

END CONSTRUCTION @ ROW LINE
EL=784.66 (MATCH EXIST. ELE)

ROW

GUTTER LINE (GL) (47')
STA=0+00
ELE=783.60

2.0%

10.0%

2.0%

(DRWAY 22) 264+10.00

℄ SH 289

PVI =8' RT OF GL
EL=783.93
VC=10'

CONTROLLED BY RDWY PROFILE
MATCH RDWY SLOPE (2% TYP)

GUTTER LINE 47' RT(GL)
STA=0+00
ELE=783.77

PVI= 0+18' RT OF GL
ELE=784.62 VC=10'

END CONSTRUCTION @ ROW LINE
EL=784.51(MATCH EXIST.ELE)

ROW

2.11%

2.0%

6.88%

(DRWAY 21) 263+85.00

810
800
790
780
820

140 130 120 110 100 90 80 70 60 50 40 30 20 10 0 10 20 30 40 50 60 70 80 90

STATE OF TEXAS
SUJA G. MATHEW
79690
LICENSED
PROFESSIONAL ENGINEER

Signature of Registrant & Date P.E. 7/11/2011

DRIVEWAY PROFILES

SCALE: 1"= 20' H & V

Sheet 9 of 14

DESIGN	FED.RD. DIV.NO.	STATE PROJECT NO.		HIGHWAY NO.
SM	6	SEE TITLE SHEET		SH 289
GRAPHICS OE	STATE	DISTRICT	COUNTY	SHEET NO.
CHECK SHM	TEXAS	DALLAS	COLLIN	
CHECK	CONTROL	SECTION	JOB	141
	0091	03	P-201107-01	

7/11/2011
t:\dal\dgn\sh289\design\sheets\drwy\021DRWY02-No2.dgn

...\sheets\drwy\021DRWY02-No2.dgn

TXDOT
20.0000 ft / IN.

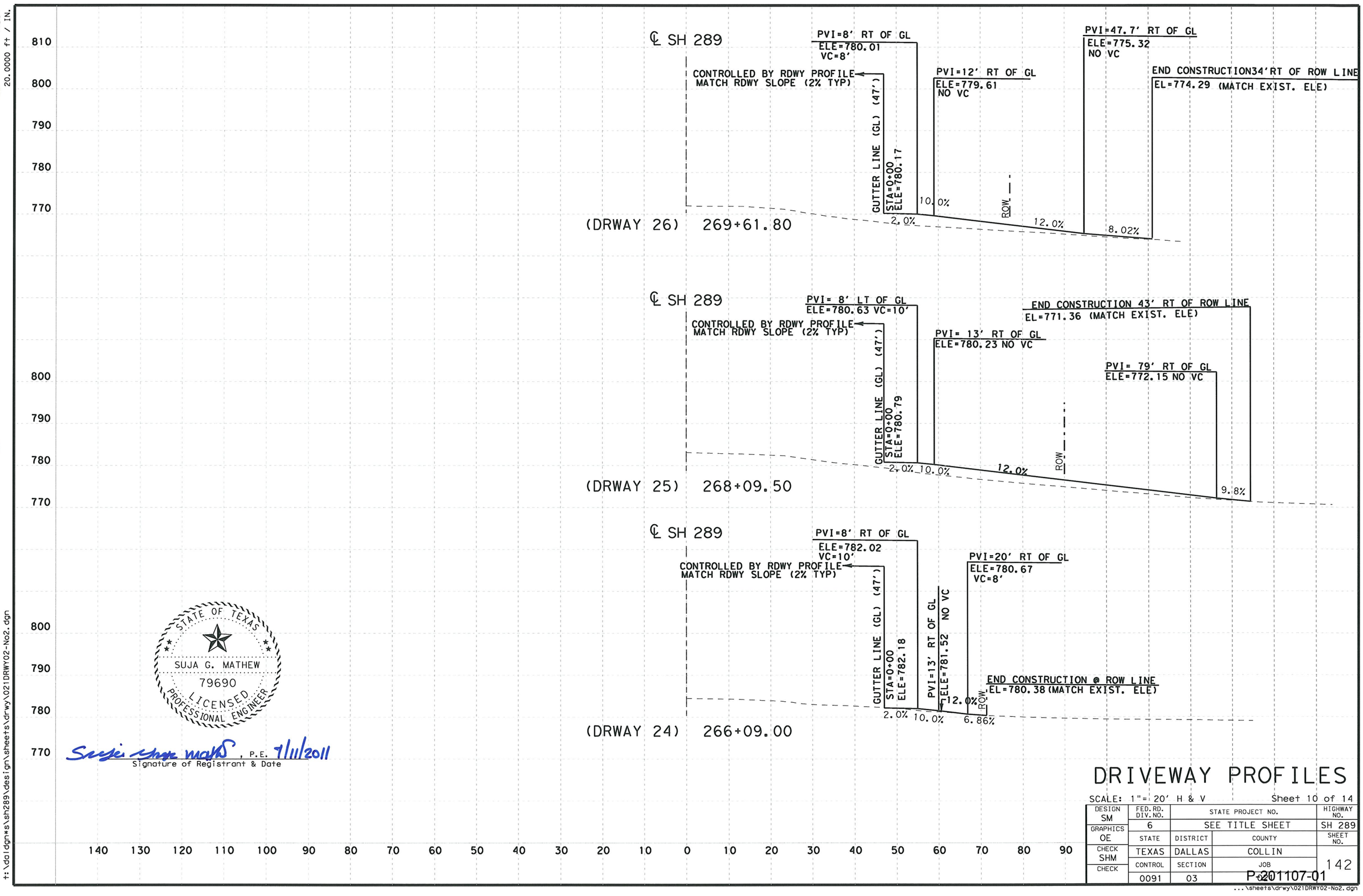

STATE OF TEXAS
SUJA G. MATHEW
79690
LICENSED
PROFESSIONAL ENGINEER

Suja G. Mathew, P.E. 7/11/2011
Signature of Registrant & Date

DRIVEWAY PROFILES

SCALE: 1"= 20' H & V

DESIGN	FED. RD. DIV. NO.	STATE PROJECT NO.		HIGHWAY NO.
SM	6	SEE TITLE SHEET		SH 289
GRAPHICS	STATE	DISTRICT	COUNTY	SHEET NO.
OE	TEXAS	DALLAS	COLLIN	
CHECK	CONTROL	SECTION	JOB	142
SHM	0091	03	020	
CHECK				P-201107-01

7/11/2011
+:\dal\dgn\s\sh289\design\sheets\drwy\021DRWY02-No2.dgn
...\sheets\drwy\021DRWY02-No2.dgn

TXDOT
20.0000 ft / IN.

℄ SH 289

PVI= 12' LT OF GL
ELE=779.28 NO VC

PVI= 31' LT OF GL
ELE=781.57 VC=8'

PVI= 8' LT OF GL
ELE=778.88 VC=8'

CONTROLLED BY RDWY PROFILE
MATCH RDWY SLOPE (2% TYP)

END CONSTRUCTION 17.5' LT OF ROW LINE
EL=781.99 (MATCH EXIST. ELE)

GUTTER LINE (GL) (47')
STA=0+00
ELE=778.72

ROW

4.0% 12.0% 10.0% 2.0%

(DRWAY 29) 273+15.00

℄ SH 289

PVI=8' RT OF GL
ELE=779.12
NO VC

CONTROLLED BY RDWY PROFILE
MATCH RDWY SLOPE (2% TYP)

GUTTER LINE (GL) (47')
STA=0+00
ELE=778.96

PVI=42' RT OF GL
ELE=779.35
VC=10'

END CONSTRUCTION @ ROW LINE
EL=779.38

ROW

2.0% 2.6% 0.47%

(DRWAY 28) 272+57.00

℄ SH 289

PVI=8' RT OF GL
ELE=779.88
VC=10'

CONTROLLED BY RDWY PROFILE
MATCH RDWY SLOPE (2% TYP)

GUTTER LINE
(GL) (47')
STA=0+00
ELE=779.72

PVI=19.8' RT OF GL
ELE=778.71
VC=7'

END CONSTRUCTION @ ROW LINE
EL=778.56 (MATCH EXIST. ELE)

ROW

2.0% 10.0% 4.4%

(DRWAY 27) 270+71.00

810 800 790 780 770

140 130 120 110 100 90 80 70 60 50 40 30 20 10 0 10 20 30 40 50 60 70 80 90

STATE OF TEXAS
SUJA G. MATHEW
79690
LICENSED
PROFESSIONAL ENGINEER

Suja G. Mathew, P.E. 7/11/2011
Signature of Registrant & Date

DRIVEWAY PROFILES

SCALE: 1"= 20' H & V

DESIGN	FED. RD. DIV. NO.	STATE PROJECT NO.		HIGHWAY NO.
SM	6	SEE TITLE SHEET		SH 289
GRAPHICS OE	STATE	DISTRICT	COUNTY	SHEET NO.
CHECK SHM	TEXAS	DALLAS	COLLIN	143
CHECK	CONTROL	SECTION	JOB	
	0091	03	02	

P.201107-01

7/11/2011
t:\dal\dgn*sh289\design\sheets\drwy\021DRWY02-No2.dgn

...\sheets\drwy\021DRWY02-No2.dgn

TXDOT
20.0000 ft / IN.

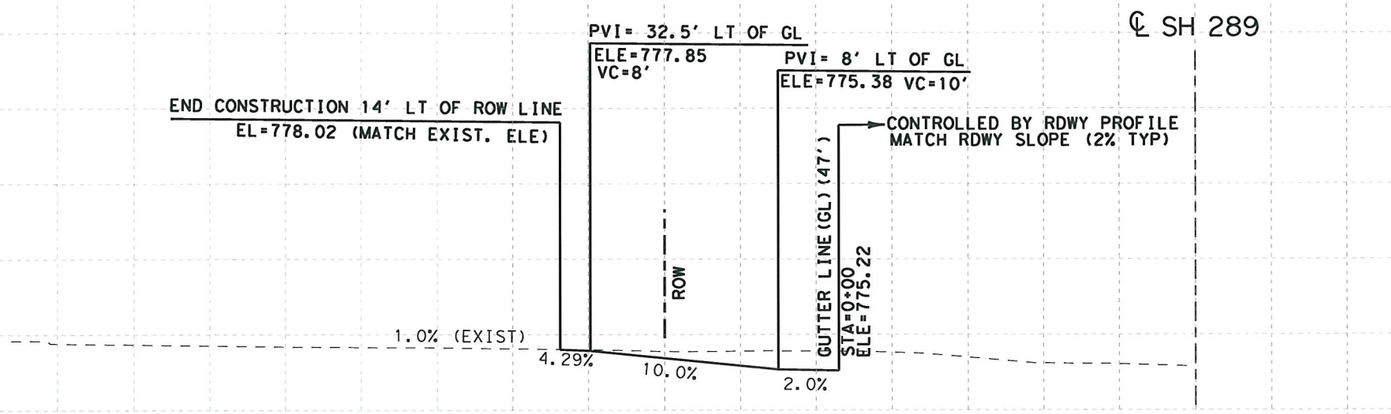

(DRWAY 32) 277+99.50

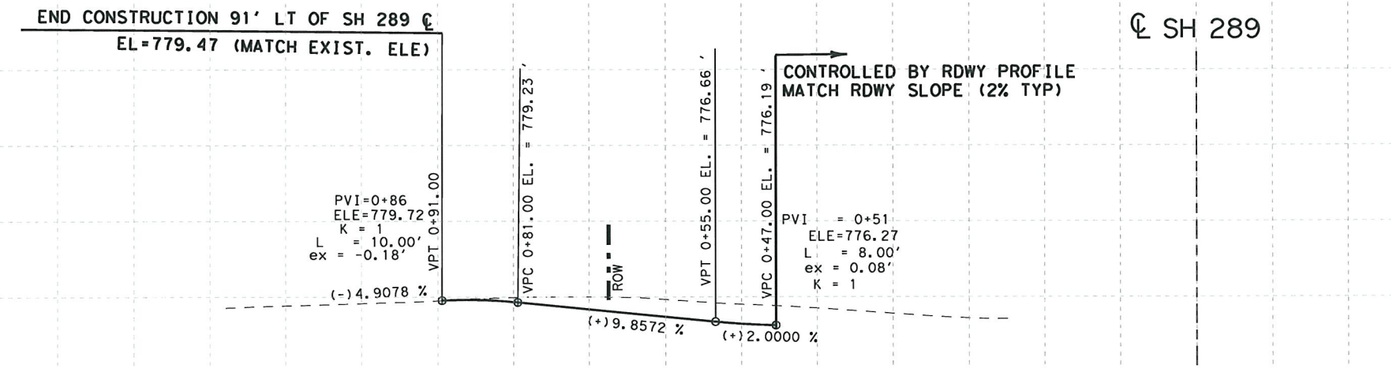

(DRWAY 31) 276+98.00

℄ SH 289

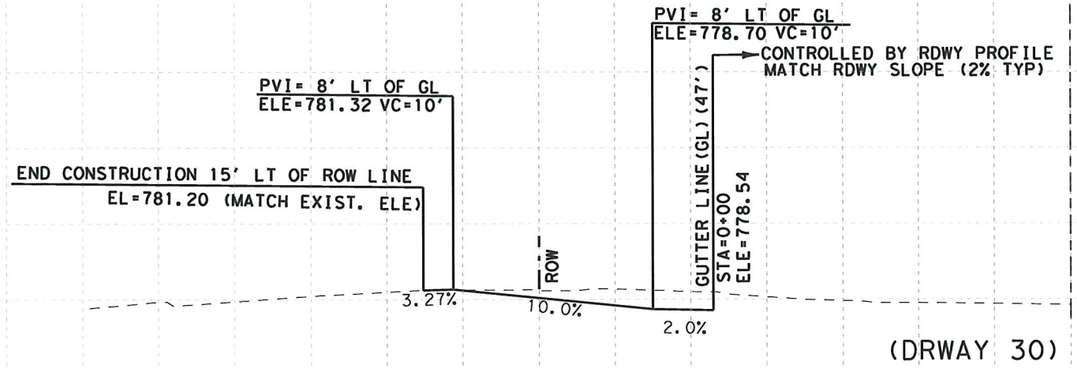

(DRWAY 30) 273+60.00

150 140 130 120 110 100 90 80 70 60 50 40 30 20 10 0 10 20 30 40 50 60 70 80

STATE OF TEXAS
SUJA G. MATHEW
79690
LICENSED
PROFESSIONAL ENGINEER

Suja G. Mathew, P.E. 7/11/2011
Signature of Registrant & Date

DRIVEWAY PROFILES

SCALE: 1"= 20' H & V

DESIGN	FED. RD. DIV. NO.	STATE PROJECT NO.		HIGHWAY NO.
SM	6	SEE TITLE SHEET		SH 289
GRAPHICS	STATE	DISTRICT	COUNTY	SHEET NO.
OE	TEXAS	DALLAS	COLLIN	
CHECK SHM	CONTROL	SECTION	JOB	144
CHECK	0091	03	P-201107-01	

7/11/2011
+:\dal\dgn*s\sh289\design\sheets\drwy\021DRWY02-No2.dgn

...\sheets\drwy\021DRWY02-No2.dgn

TXDOT
20.0000 ft / IN.

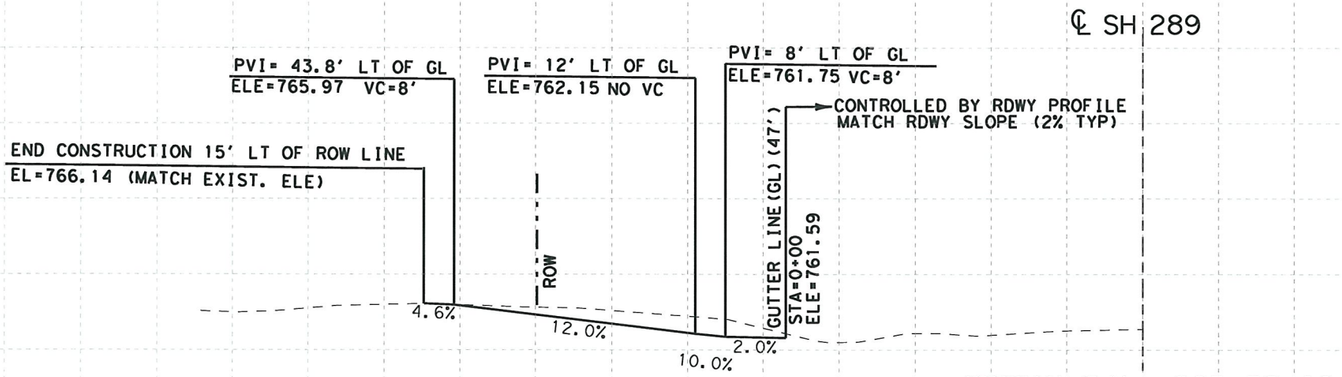

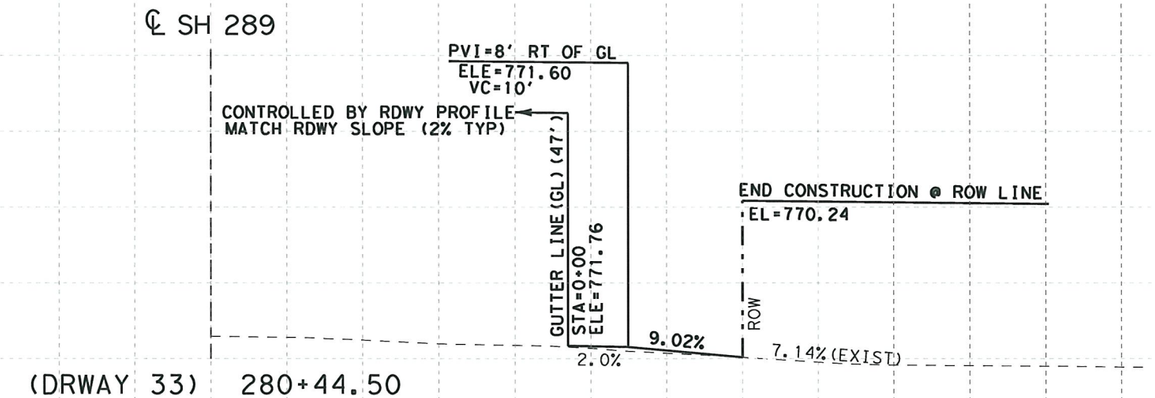

STATE OF TEXAS
SUJA G. MATHEW
79690
LICENSED
PROFESSIONAL ENGINEER

Signature of Registrant & Date , P.E. 7/11/2011

DRIVEWAY PROFILES

SCALE: 1"= 20' H & V

Sheet 13 of 14

DESIGN	FED.RD. DIV.NO.	STATE PROJECT NO.		HIGHWAY NO.
SM	6	SEE TITLE SHEET		SH 289
GRAPHICS OE	STATE	DISTRICT	COUNTY	SHEET NO.
CHECK SHM	TEXAS	DALLAS	COLLIN	145
CHECK	CONTROL	SECTION	JOB	
	0091	03	02	

P.201107-01

7/11/2011
t:\dal\dgn\s\sh289\design\sheets\drwy\021DRWY02-No2.dgn

...\sheets\drwy\021DRWY02-No2.dgn

TXDOT
20.0000 ft / IN.

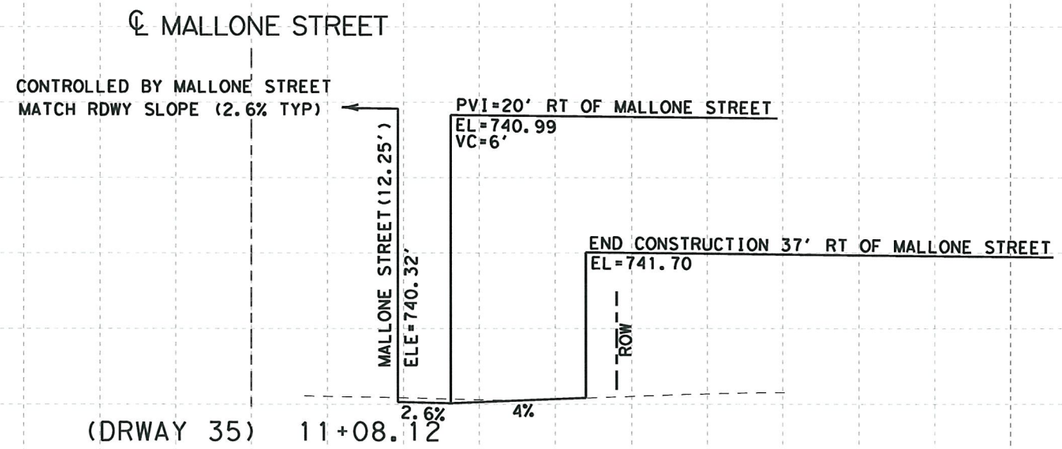

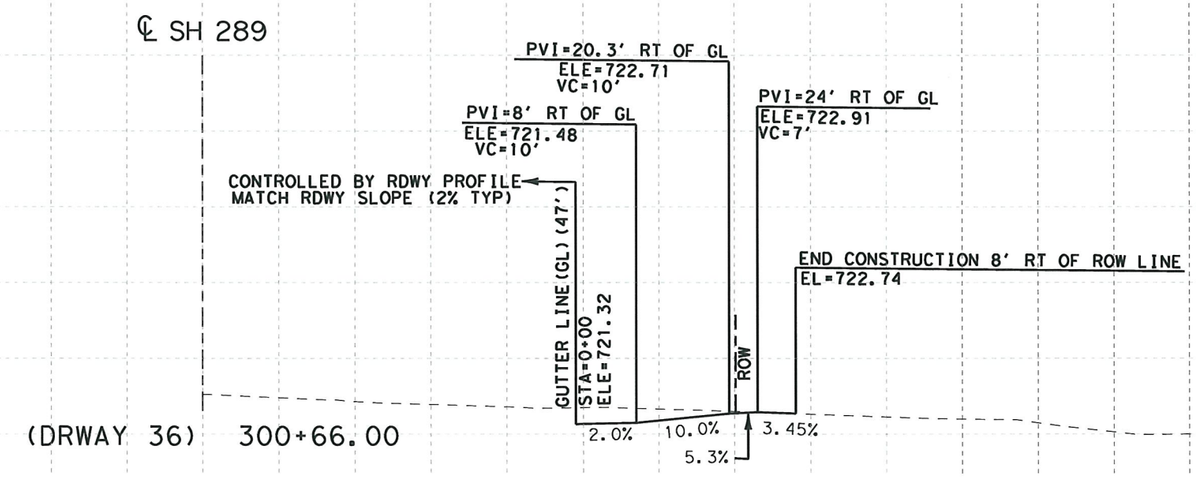

STATE OF TEXAS
SUJA G. MATHEW
79690
LICENSED
PROFESSIONAL ENGINEER

Suja G. Mathew, P.E. 7/11/2011
Signature of Registrant & Date

DRIVEWAY PROFILES

SCALE: 1"= 20' H & V

Sheet 14 of 14

DESIGN	FED.RD. DIV.NO.	STATE PROJECT NO.		HIGHWAY NO.
SM	6	SEE TITLE SHEET		SH 289
GRAPHICS OE	STATE	DISTRICT	COUNTY	SHEET NO.
CHECK SHM	TEXAS	DALLAS	COLLIN	
CHECK	CONTROL	SECTION	JOB	146
	0091	03	P.201107-01	

7/11/2011
t:\dal\dgn*s\sh289\design\sheets\drwy\021DRWY02-No2.dgn
...\sheets\drwy\021DRWY02-No2.dgn

TXDOT
20.0000 ft / IN.

CSJ: 0091-03-021
BEGIN STA. 121+00.00
END STA. 303+05.00

SHEET NO.	LOCATION	RADIUS (FT)	AVE WIDTH (FT)	AREA (SY)	CENTERLINE STATION	PROPOSED PGL ELEVATION (FT)	MATCH EXISTING PAVEMENT @ EL (FT)	DESIGN SPEED (MPH)
2 OF 9	SH 289 @ BUS 289	65	21.5	565	133+95.50	739.99	735.07	30
2 OF 9	SH 289 @ CR 105	60	12.5	521.2	139+94.00	750.89	758.79	30
3 OF 9	SH 289 @ CR 134	60	33.1	507	154+42.50	738.10	750.37	30
5 OF 9	SH 289 @ CR 100	65	12.5	387	180+61.00	722.58	724.39	30
4 OF 9	SH 289 @ CR 99	65	11	412	180+62.00	722.74	718.90	30
5 OF 9	SH 289 @ CR 95	65	22	504	259+99.00	786.29	784.68	30
5 OF 9	SH 289 @ CR 96	65	40	801	260+13.00	786.29	787.78	30
6 OF 9	SH 289 @ JAMES RD	65	11.5	413	168+15.50	780.79	771.36	30
7 OF 9	SH 289 @ KINNEY DR	65	26.5	699	271+07.80	779.57	781.24	30
7 OF 9	SH 289 @ FOUNDERS LANE	65	29.5	594	280.45.50	771.74	773.47	30
8 OF 9	SH 289 @ CR 94 EASTBOUND	65	11	594.6	287+63.50	754.18	749.61	30
8 OF 9	SH 289 @ CR 94 WESTBOUND	65	34	1099.5	287+63.50	755.34	757.84	30
9 OF 9	SH 289 @ E MALON ST	65	22	590	292+24.50	741.15	741.25	30

STATE OF TEXAS
SUJA G. MATHEW
79690
LICENSED PROFESSIONAL ENGINEER

Suja G. Mathew, P.E. 7/11/2011
Signature of Registrant & Date

Texas Department of Transportation
© 2011

SH 289

CROSS STREETS DATA

Sheet 1 of 9

DESIGN	FED. RD. DIV. NO.	STATE PROJECT NO.		HIGHWAY NO.
SM	6	SEE TITLE SHEET		SH 289
GRAPHICS OE	STATE	DISTRICT	COUNTY	SHEET NO.
CHECK SHM	TEXAS	DALLAS	COLLIN	147
CHECK	CONTROL	SECTION	JOB	
	0091	03	P-201107-01	

7/11/2011
t:\dal\dgn*s\sh289\design\sheets\drwy\021DRWY02-No1.dgn
...\sheets\drwy\021DRWY02-No1.dgn

TXDOT
20.0000 ft / IN.

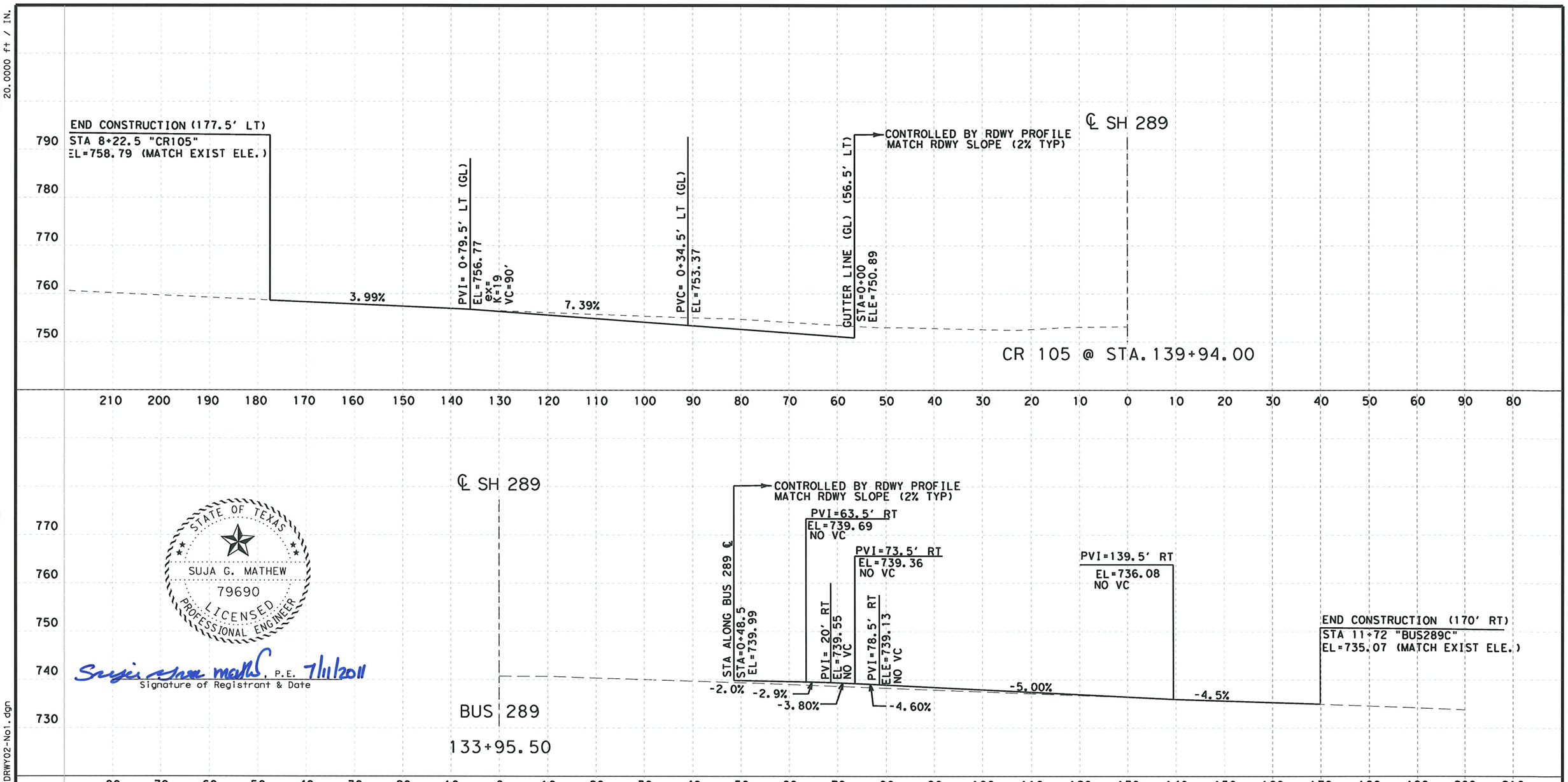

STATE OF TEXAS
SUJA G. MATHEW
79690
LICENSED
PROFESSIONAL ENGINEER

Suja G. Mathew, P.E. 7/11/2011
Signature of Registrant & Date

CROSS STREETS PROFILES

SCALE: 1"= 20' H & V

DESIGN	FED. RD. DIV. NO.	STATE PROJECT NO.		HIGHWAY NO.
SM	6	SEE TITLE SHEET		SH 289
GRAPHICS	STATE	DISTRICT	COUNTY	SHEET NO.
OE	TEXAS	DALLAS	COLLIN	
CHECK	CONTROL	SECTION	JOB	148
SHM	0091	03	P.201107-01	
CHECK				

7/11/2011
t:\dal\dgn\s\sh289\design\sheets\drwy\021DRWY02-No1.dgn
...\sheets\drwy\021DRWY02-No1.dgn

TXDOT
20.0000 ft / IN.

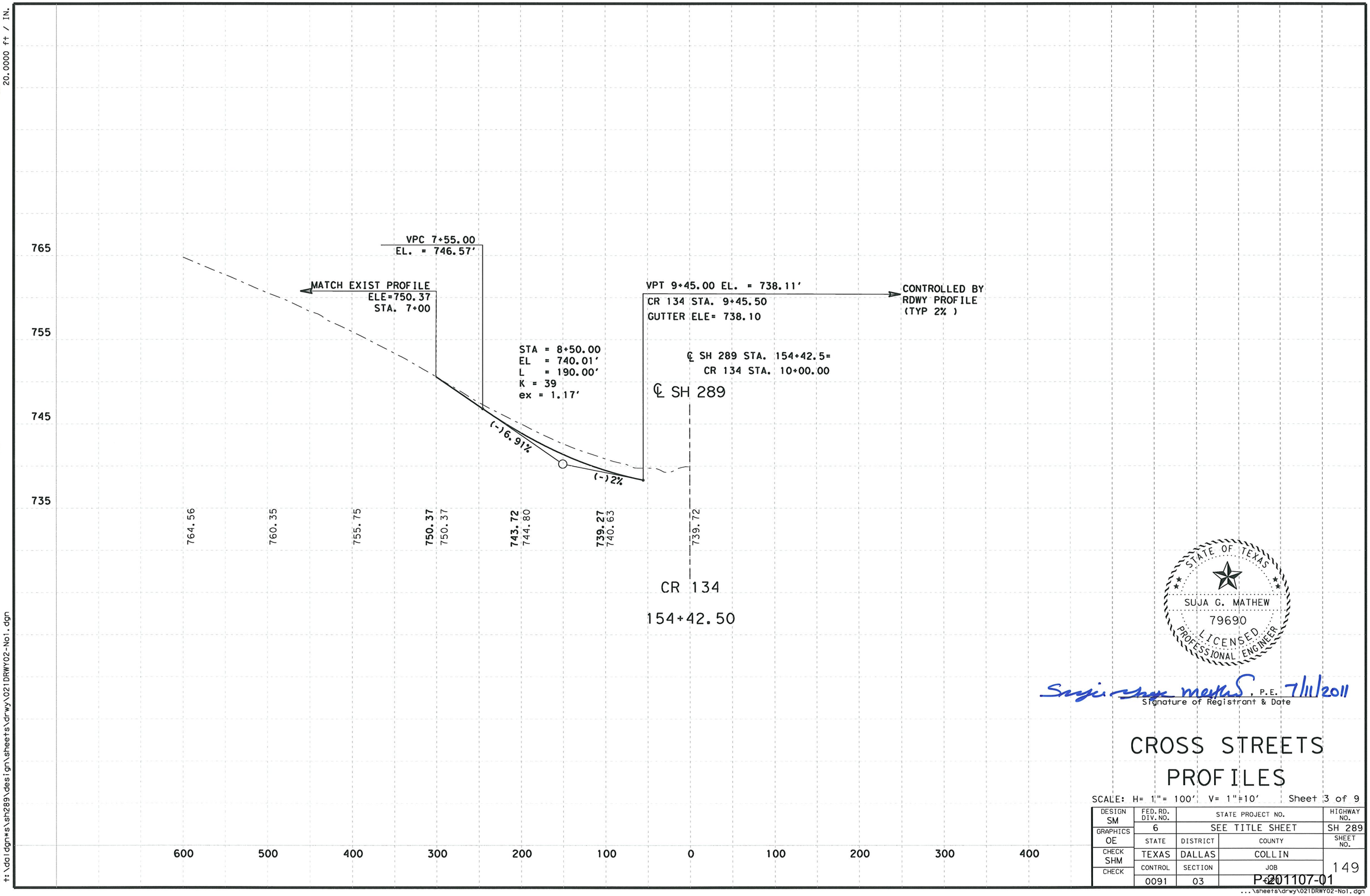

STATE OF TEXAS
SUJA G. MATHEW
79690
LICENSED
PROFESSIONAL ENGINEER

Signature of Registrant & Date , P.E. 7/11/2011

CROSS STREETS PROFILES

SCALE: H= 1"= 100' V= 1"=10' Sheet 3 of 9

DESIGN	FED.RD. DIV.NO.	STATE PROJECT NO.		HIGHWAY NO.
SM	6	SEE TITLE SHEET		SH 289
GRAPHICS OE	STATE	DISTRICT	COUNTY	SHEET NO.
CHECK SHM	TEXAS	DALLAS	COLLIN	
CHECK	CONTROL	SECTION	JOB	149
	0091	03	P-201107-01	

7/11/2011
t:\dal\dgn*s\sh289\design\sheets\drwy\021DRWY02-No1.dgn
...\sheets\drwy\021DRWY02-No1.dgn

TXDOT
20.0000 ft / IN.

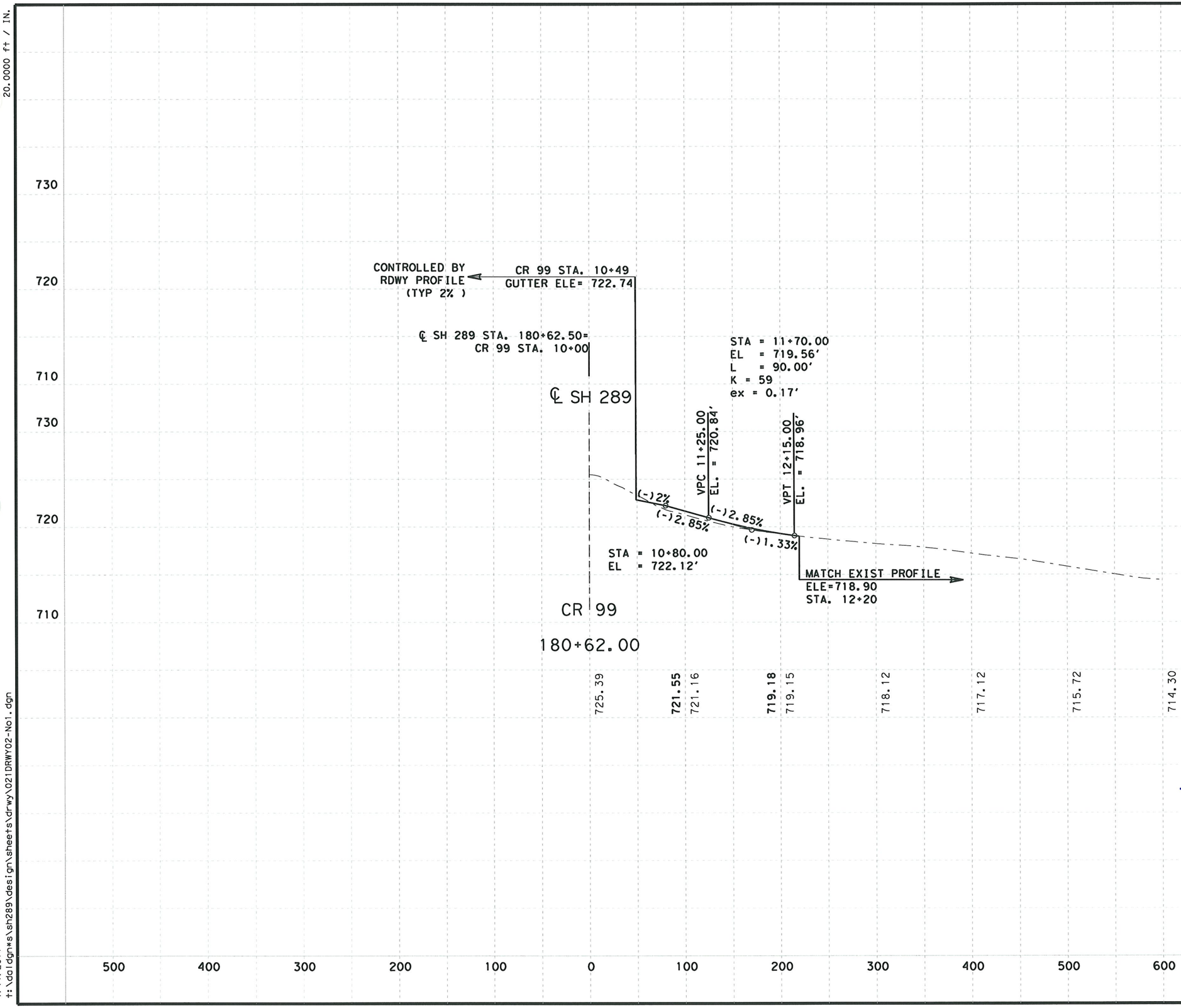

STATE OF TEXAS
SUJA G. MATHEW
79690
LICENSED
PROFESSIONAL ENGINEER

Suja G. Mathew, P.E. 7/11/2011
Signature of Registrant & Date

CROSS STREETS PROFILES

SCALE: H= 1"= 100' V= 1"=10' Sheet 4 of 9

DESIGN	FED. RD. DIV. NO.	STATE PROJECT NO.		HIGHWAY NO.
SM	6	SEE TITLE SHEET		SH 289
GRAPHICS OE	STATE	DISTRICT	COUNTY	SHEET NO.
CHECK SHM	TEXAS	DALLAS	COLLIN	150
CHECK	CONTROL	SECTION	JOB	
	0091	03	P-201107-01	

7/11/2011
...\sheets\drwy\021DRWY02-No1.dgn

TXDOT
20.0000 ft / IN.

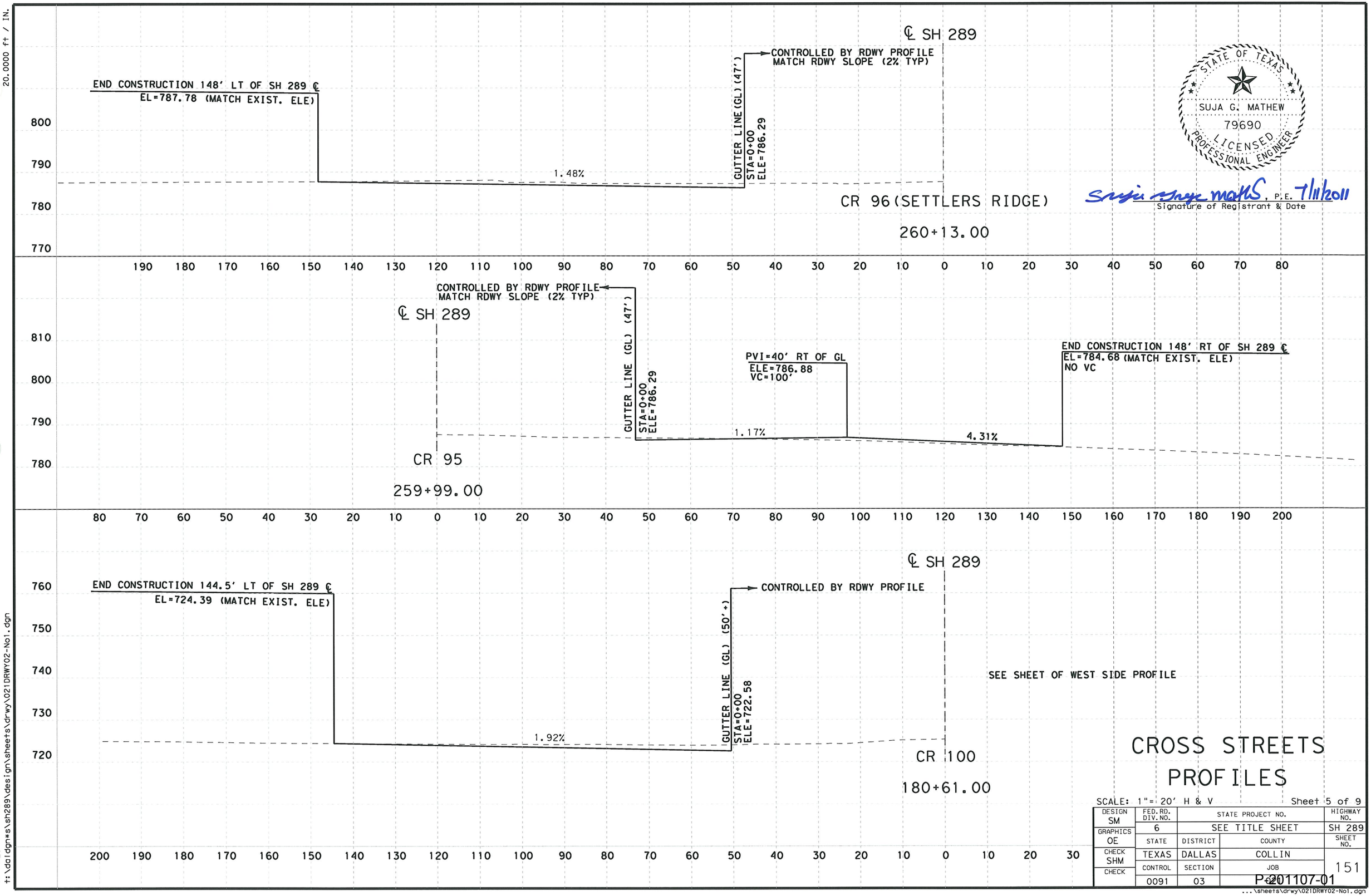

STATE OF TEXAS
SUJA G. MATHEW
79690
LICENSED
PROFESSIONAL ENGINEER

Suja G. Mathew, P.E. 7/11/2011
Signature of Registrant & Date

CROSS STREETS PROFILES

SCALE: 1"= 20' H & V

Sheet 5 of 9

DESIGN	FED.RD. DIV.NO.	STATE PROJECT NO.		HIGHWAY NO.
SM	6	SEE TITLE SHEET		SH 289
GRAPHICS OE	STATE	DISTRICT	COUNTY	SHEET NO.
CHECK SHM	TEXAS	DALLAS	COLLIN	151
CHECK	CONTROL	SECTION	JOB	
	0091	03	P-201107-01	

7/11/2011
t:\dal\dgn*s\sh289\design\sheets\drwy\021DRWY02-No1.dgn
...\sheets\drwy\021DRWY02-No1.dgn

TXDOT
20.0000 ft / IN.

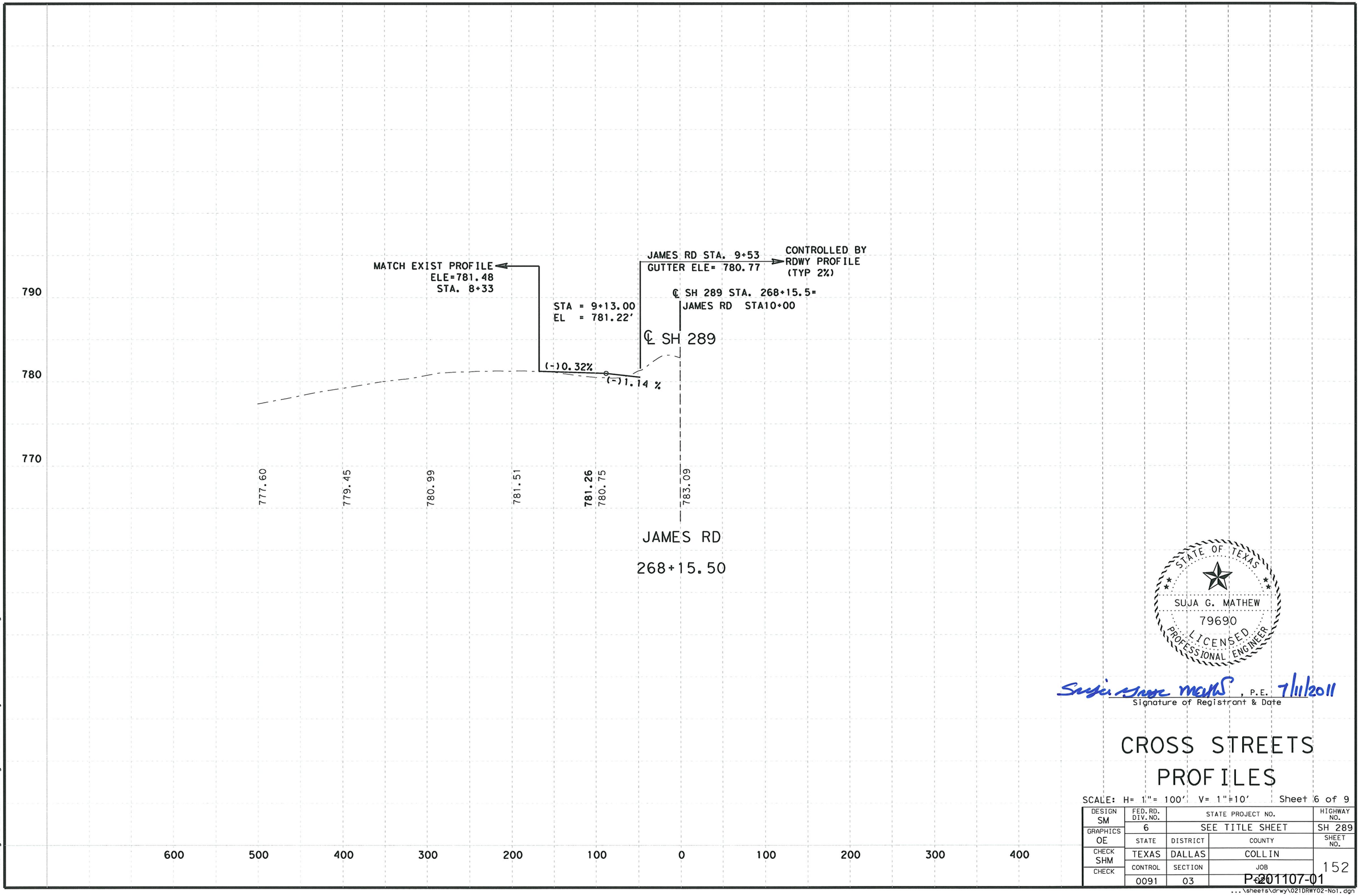

SUJA G. MATHEW
79690
LICENSED
PROFESSIONAL ENGINEER
STATE OF TEXAS

Suja G. Mathew, P.E. 7/11/2011
Signature of Registrant & Date

CROSS STREETS PROFILES

SCALE: H= 1"= 100' V= 1"=10' Sheet 6 of 9

DESIGN	FED.RD. DIV.NO.	STATE PROJECT NO.		HIGHWAY NO.
SM	6	SEE TITLE SHEET		SH 289
GRAPHICS OE	STATE	DISTRICT	COUNTY	SHEET NO.
CHECK SHM	TEXAS	DALLAS	COLLIN	152
CHECK	CONTROL	SECTION	JOB	
	0091	03	201107-01	

7/11/2011
t:\dal\dgn*s\sh289\design\sheets\drwy\021DRWY02-No1.dgn
...\sheets\drwy\021DRWY02-No1.dgn

TXDOT
20.0000 ft / IN.

STATE OF TEXAS
SUJA G. MATHEW
79690
LICENSED
PROFESSIONAL ENGINEER

Suja G. Mathew, P.E. 7/11/2011
Signature of Registrant & Date

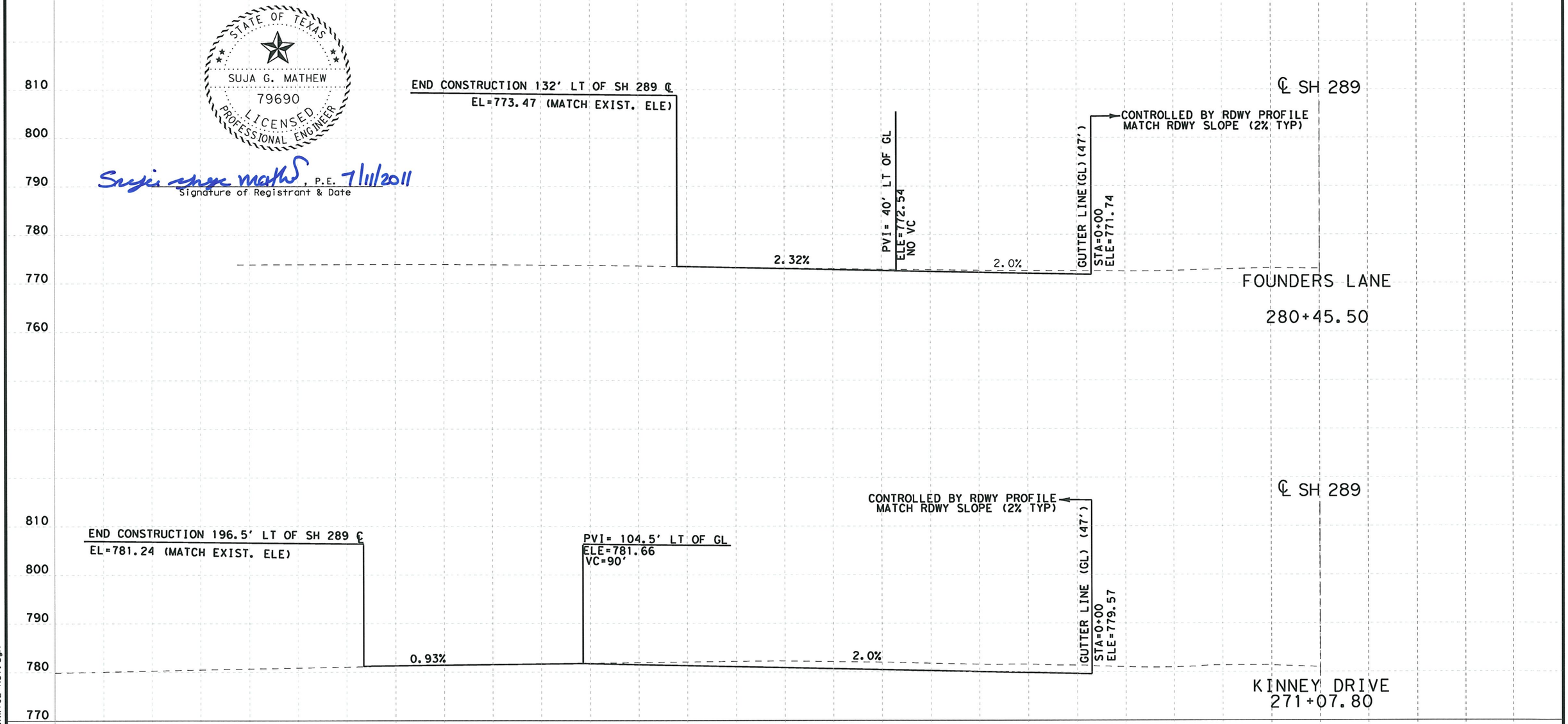

CROSS STREETS PROFILES

SCALE: 1"= 20' H & V

DESIGN	FED.RD. DIV.NO.	STATE PROJECT NO.		HIGHWAY NO.
SM	6	SEE TITLE SHEET		SH 289
GRAPHICS OE	STATE	DISTRICT	COUNTY	SHEET NO.
CHECK SHM	TEXAS	DALLAS	COLLIN	
CHECK	CONTROL	SECTION	JOB	153
	0091	03	P-201107-01	

7/11/2011
I:\dgn*s\sh289\design\sheets\drwy\021DRWY02-No1.dgn
...\sheets\drwy\021DRWY02-No1.dgn

TXDOT
20.0000 ft / IN.

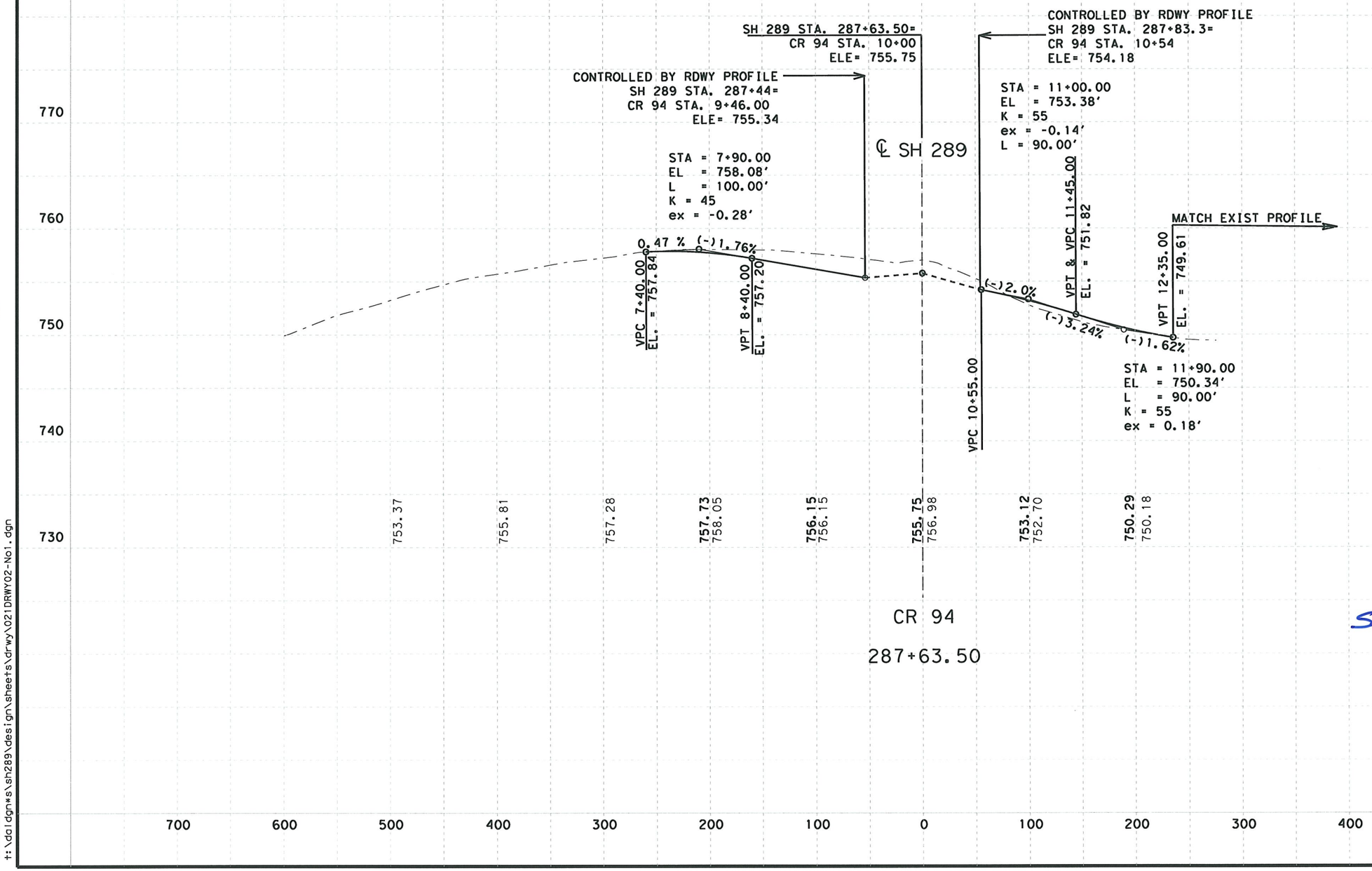

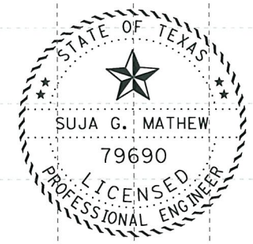

Signature of Registrant & Date

7/11/2011

CROSS STREETS PROFILES

SCALE: H= 1"= 100' V= 1"=10'

Sheet 8 of 9

DESIGN	FED.RD. DIV.NO.	STATE PROJECT NO.		HIGHWAY NO.
SM	6	SEE TITLE SHEET		SH 289
GRAPHICS OE	STATE	DISTRICT	COUNTY	SHEET NO.
CHECK SHM	TEXAS	DALLAS	COLLIN	
CHECK	CONTROL	SECTION	JOB	154
	0091	03	P-201107-01	

7/11/2011
t:\dal\dgn*s\sh289\design\sheets\drwy\021DRWY02-No1.dgn

...\sheets\drwy\021DRWY02-No1.dgn

TXDOT
20.0000 ft / IN.

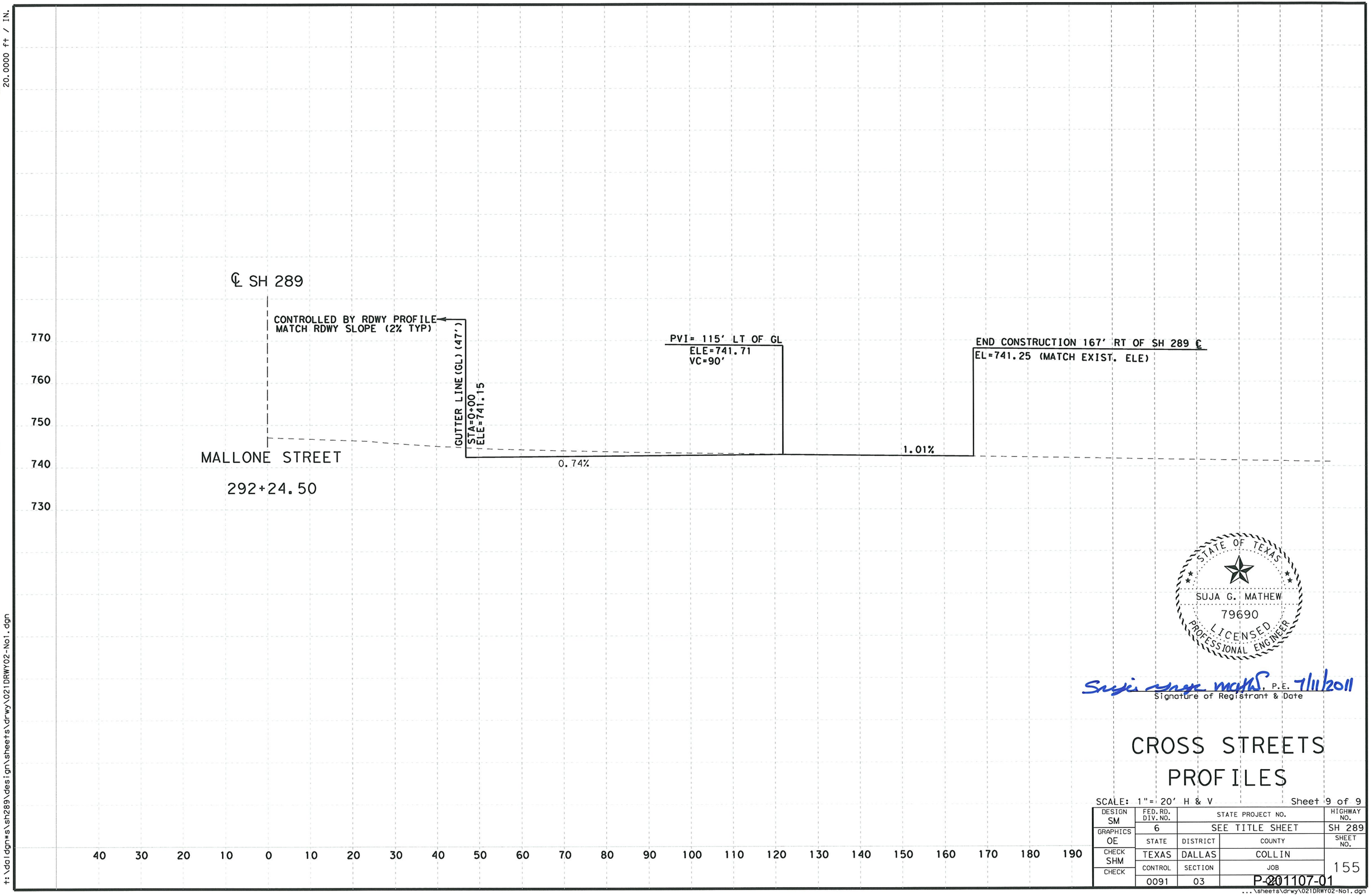

STATE OF TEXAS
SUJA G. MATHEW
79690
LICENSED
PROFESSIONAL ENGINEER

Suja G. Mathew, P.E. 7/11/2011
Signature of Registrant & Date

CROSS STREETS PROFILES

SCALE: 1"= 20' H & V

DESIGN	FED. RD. DIV. NO.	STATE PROJECT NO.			HIGHWAY NO.
SM	6	SEE TITLE SHEET			SH 289
GRAPHICS	STATE	DISTRICT	COUNTY		SHEET NO.
OE	TEXAS	DALLAS	COLLIN		
CHECK	CONTROL	SECTION	JOB		155
SHM	0091	03	P-201107-01		
CHECK					

7/11/2011
I:\dal\dgn\s\sh289\design\sheets\drwy\021DRWY02-No1.dgn
...\sheets\drwy\021DRWY02-No1.dgn

TXDOT
40.0000 ft / IN.

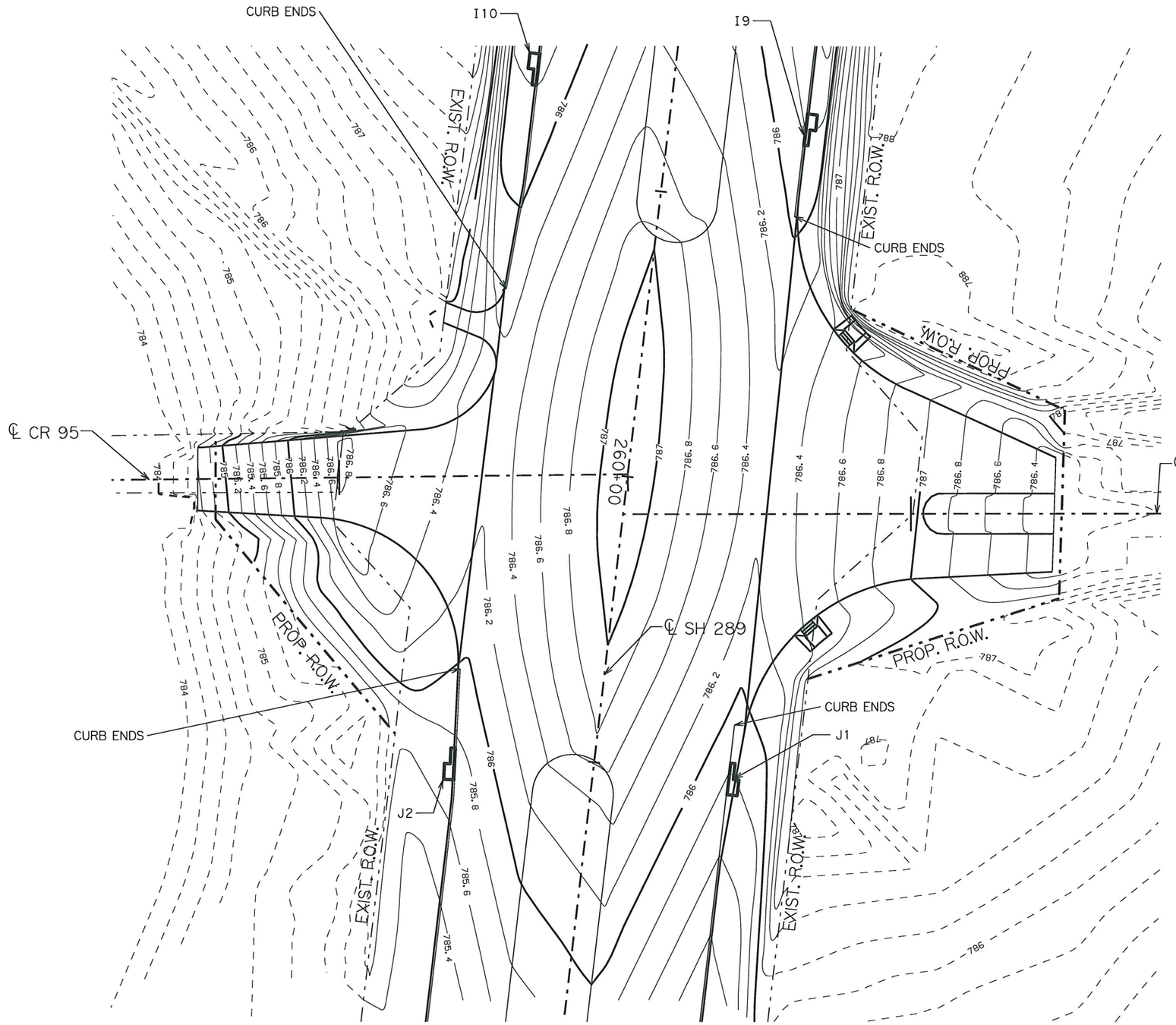

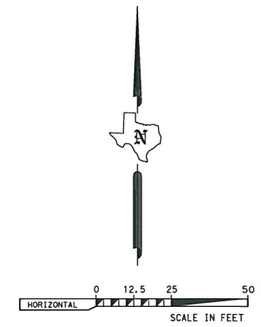

STATE OF TEXAS
HASSAN SAM MOGHADASSI
84231
LICENSED
PROFESSIONAL ENGINEER

H. Moghadassi , P.E. 7/12/11
Signature of Registrant & Date

IntersectContCR95&94.dgn

Texas Department of Transportation
© 2011

SH 289

COUNTOUR MAP INTERSECTION CR 96 & CR 95

SCALE: 1"= 40 FT

DESIGN	FED. RD. DIV. NO.	STATE PROJECT NO.		HIGHWAY NO.
CAT	6	SEE TITLE SHEET		SH 289
GRAPHICS	STATE	DISTRICT	COUNTY	SHEET NO.
CAT	TEXAS	DALLAS	COLLIN	
CHECK TA	CONTROL	SECTION	JOB	156
CHECK SHM	0091	03	201107-01	

P-201107-01

7/11/2011
t:\dalgn*s\sh289\design\sheets\contours\IntersectContCR95&94.dgn

...\IntersectContCR95&94.dgn

TXDOT
220.0000 ft / IN.

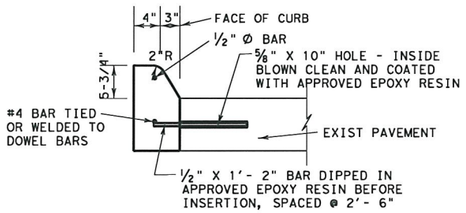

TYPE II DOWEL CURB
(FOR EXISTING PAVEMENT)

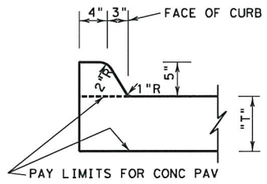

TYPE II CURB

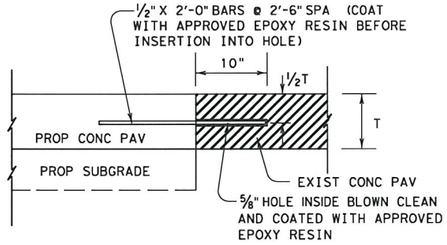

ANCHOR JOINT DETAIL

TO BE USED WHERE PROPOSED CONCRETE PAVEMENT MEETS EXISTING CONCRETE PAVEMENT

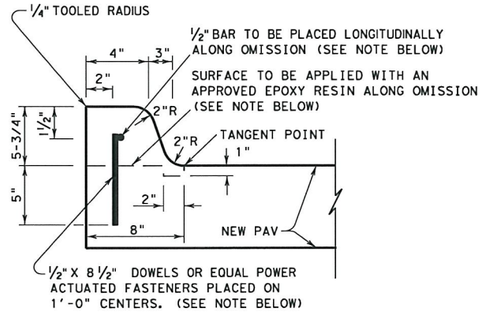

NOTE:
IF CONTINUOUS MONOLITHIC CURB HAS TO BE OMITTED FOR ANY REASON, THE CURB SHALL BE DOWELED AS SHOWN ABOVE.

TYPE II DOWEL CURB
(FOR NEW PAVEMENT)

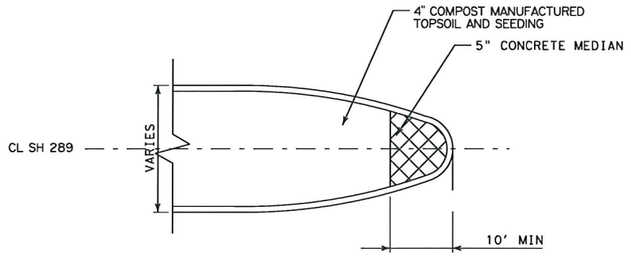

CONCRETE NOSE FOR MEDIAN ISLANDS

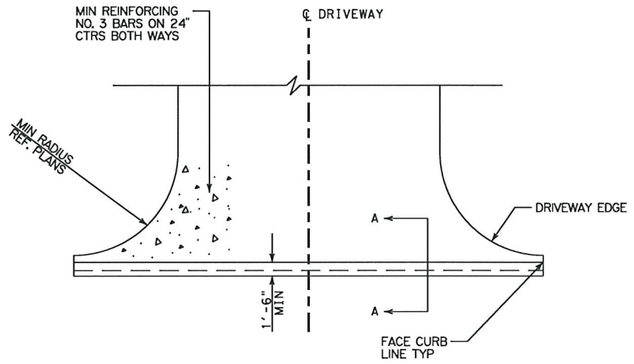

CONCRETE DRIVEWAY APPROACH

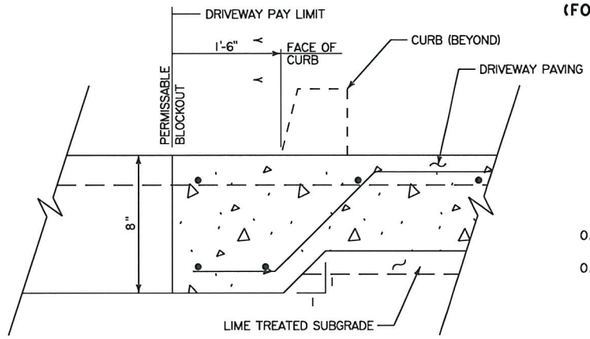

SECTION A-A

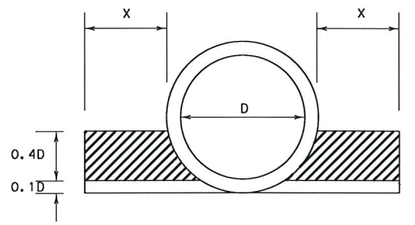

X = 1'-0" FOR PIPES 42" OR LESS
AND
X = 2'-0" FOR PIPES OVER 42"

CEMENT STABILIZED BACKFILL

FOR STORM SEWERS ON SLOPES GREATER THAN 10%

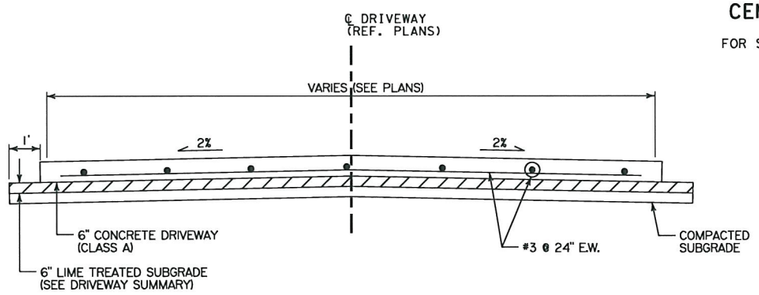

CONCRETE DRIVEWAY DETAIL

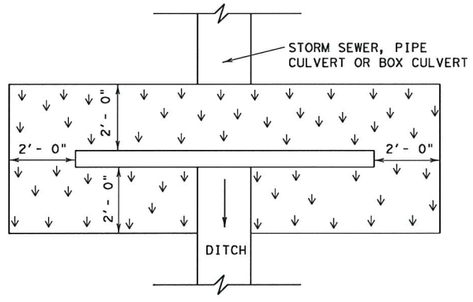

BLOCK SOD AT HEADWALL

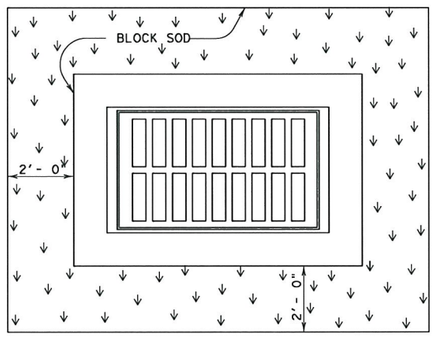

BLOCK SOD AT INLETS

NOTE: Quantities for Block Sod shown at drainage structures are included in SW3P layout sheets.

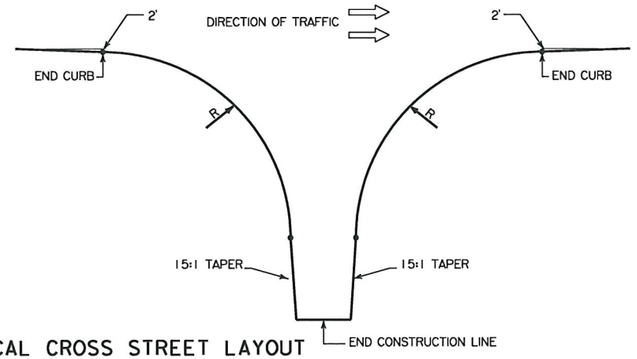

TYPICAL CROSS STREET LAYOUT

HASSAN SAM MOGHADASSI
84231
LICENSED PROFESSIONAL ENGINEER
STATE OF TEXAS

H. Moghadassi, P.E. 7/12/11
Signature of Registrant & Date

misc details.dgn

Texas Department of Transportation
© 2011

SH 289
FM 455 TO N BUS 289C
MISCELLANEOUS ROADWAY DETAILS

NOT TO SCALE — Sheet 1 of 2

DESIGN	FED. RD. DIV. NO.	STATE PROJECT NO.		HIGHWAY NO.
SHM	6	SEE TITLE SHEET		SH 289
GRAPHICS	STATE	DISTRICT	COUNTY	SHEET NO.
SHM	TEXAS	DALLAS	COLLIN	
CHECK	CONTROL	SECTION	JOB	
SM	0091	03	P-201107-01	157
CHECK				
SM				

7/11/2011
I:\dalgns\sh289\design\sheets\MISC\misc details.dgn
...\sheets\MISC\misc details.dgn

TXDOT
100.0000 ft / IN.

GUARD FENCE POST MOUNTING ON INLET AND EXTENSION TOPS

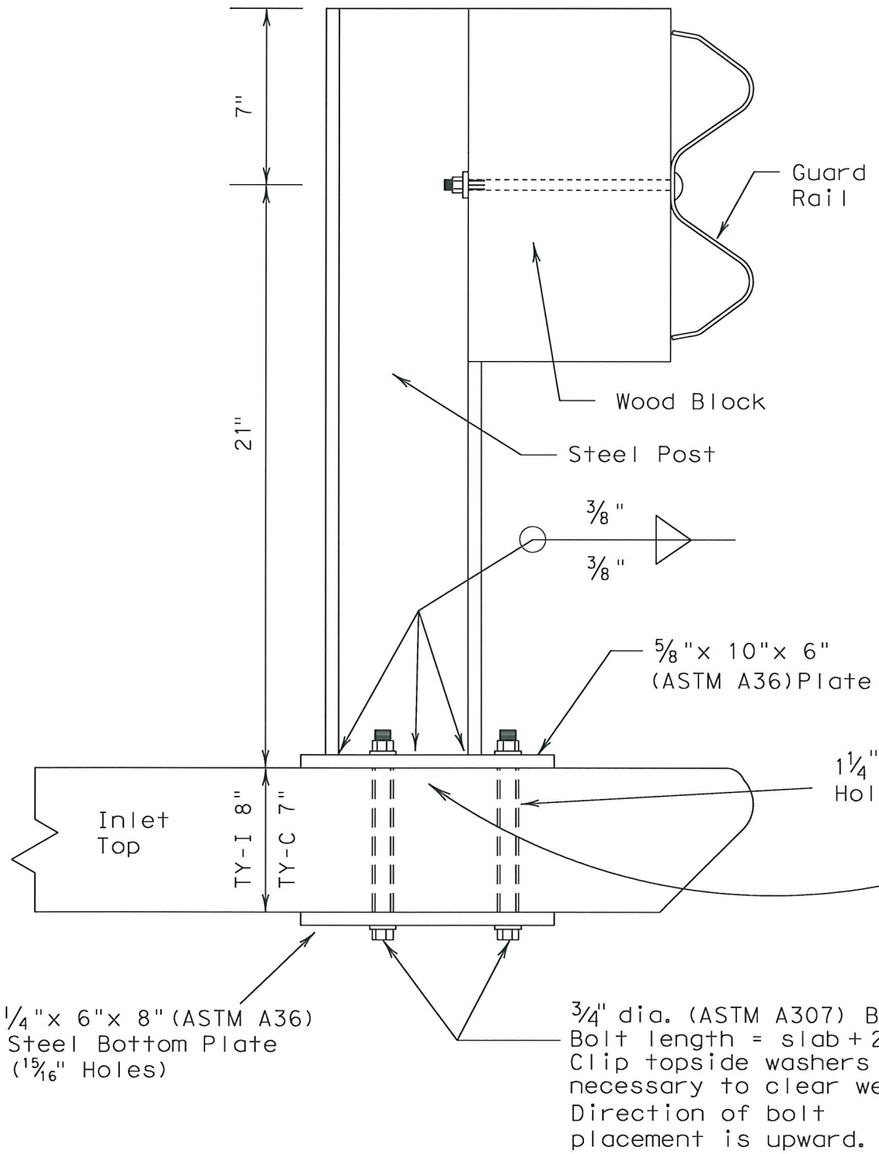

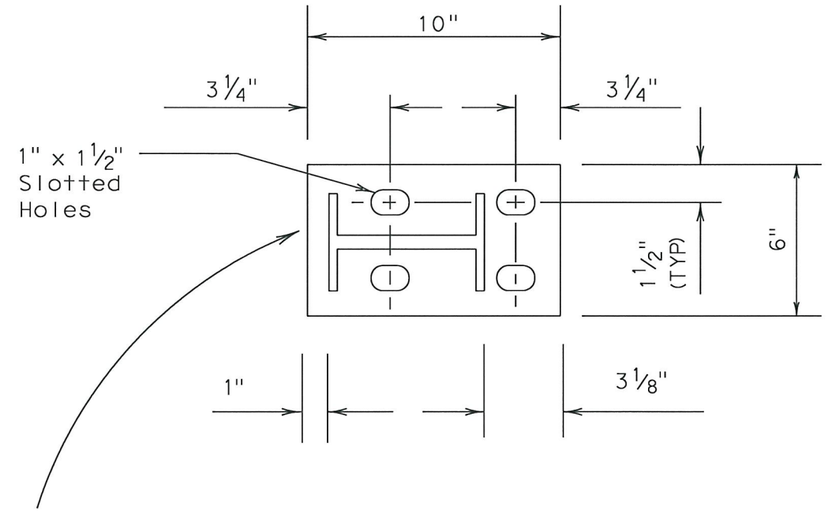

STATE OF TEXAS
HASSAN SAM MOGHADASSI
84231
LICENSED PROFESSIONAL ENGINEER

H. Moghadassi, P.E. 7/12/11
Signature of Registrant & Date

misc details.dgn

Texas Department of Transportation
© 2011

SH 289
FM 455 TO N BUS 289C
MISCELLANEOUS ROADWAY
DETAILS

NOT TO SCALE Sheet 2 of 2

DESIGN	FED.RD. DIV.NO.	STATE PROJECT NO.		HIGHWAY NO.
SHM	6	SEE TITLE SHEET		SH 289
GRAPHICS SHM	STATE	DISTRICT	COUNTY	SHEET NO.
CHECK SM	TEXAS	DALLAS	COLLIN	
CHECK SM	CONTROL	SECTION	JOB	158
	0091	03	020	

P-201107-01

7/11/2011
T:\dalgnrs\sh289\design\sheets\MISC\misc details.dgn
...\sheets\MISC\misc details.dgn

DISCLAIMER:
The use of this standard is governed by the "Texas Engineering Practice Act". No warranty of any kind is made by TxDOT for any purpose whatsoever. TxDOT assumes no responsibility for the conversion of this standard to other formats or for incorrect results or damages resulting from its use.

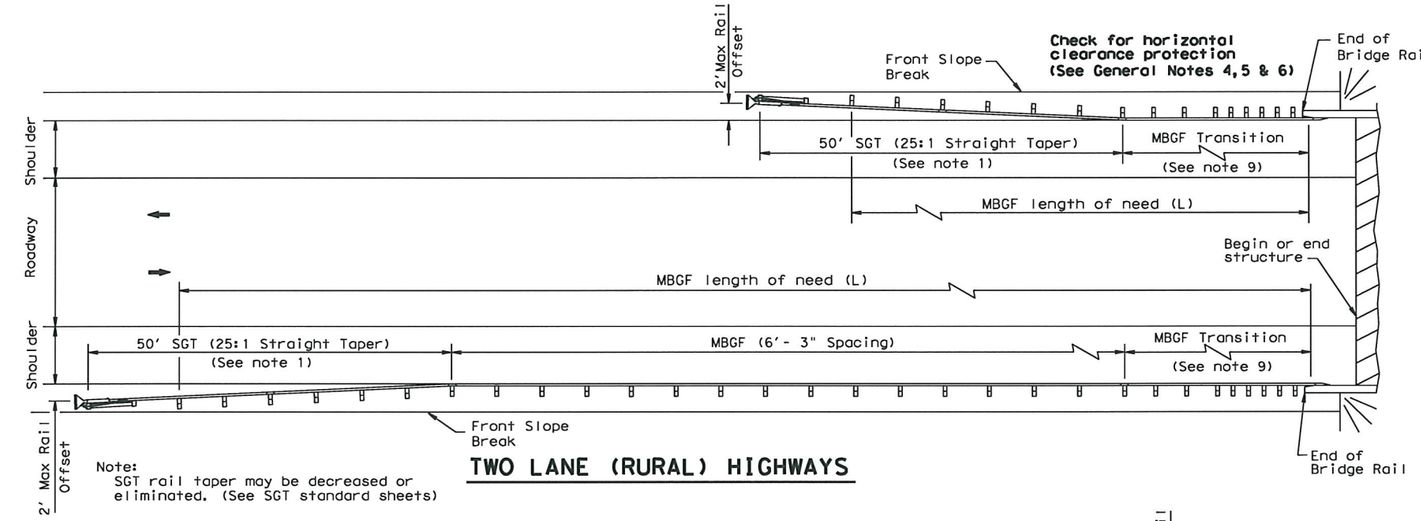

Note:
SGT rail taper may be decreased or eliminated. (See SGT standard sheets)

TWO LANE (RURAL) HIGHWAYS

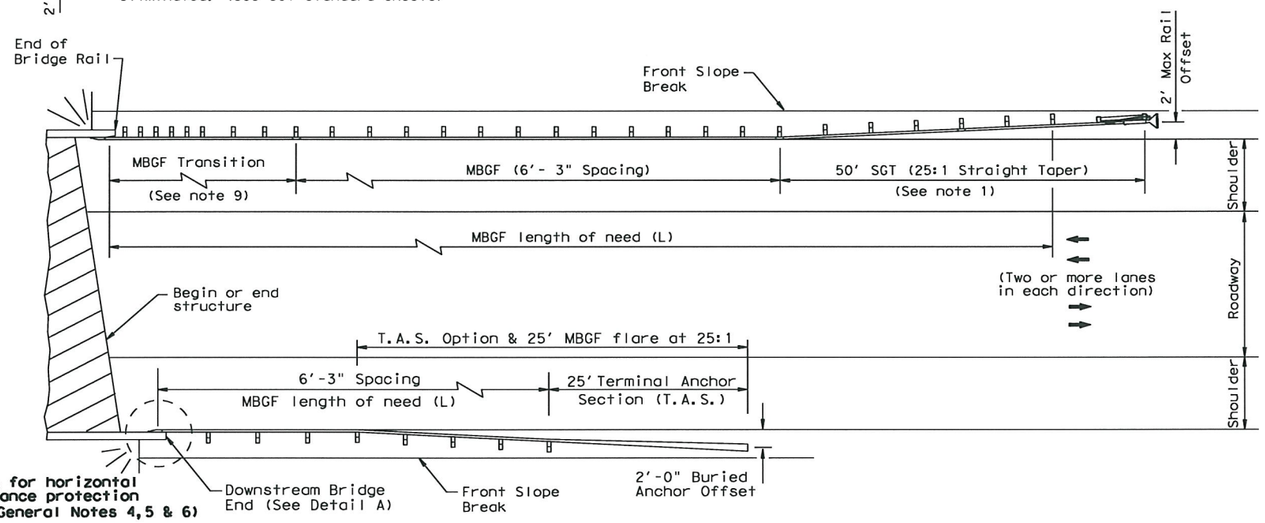

MULTILANE UNDIVIDED (RURAL) HIGHWAYS

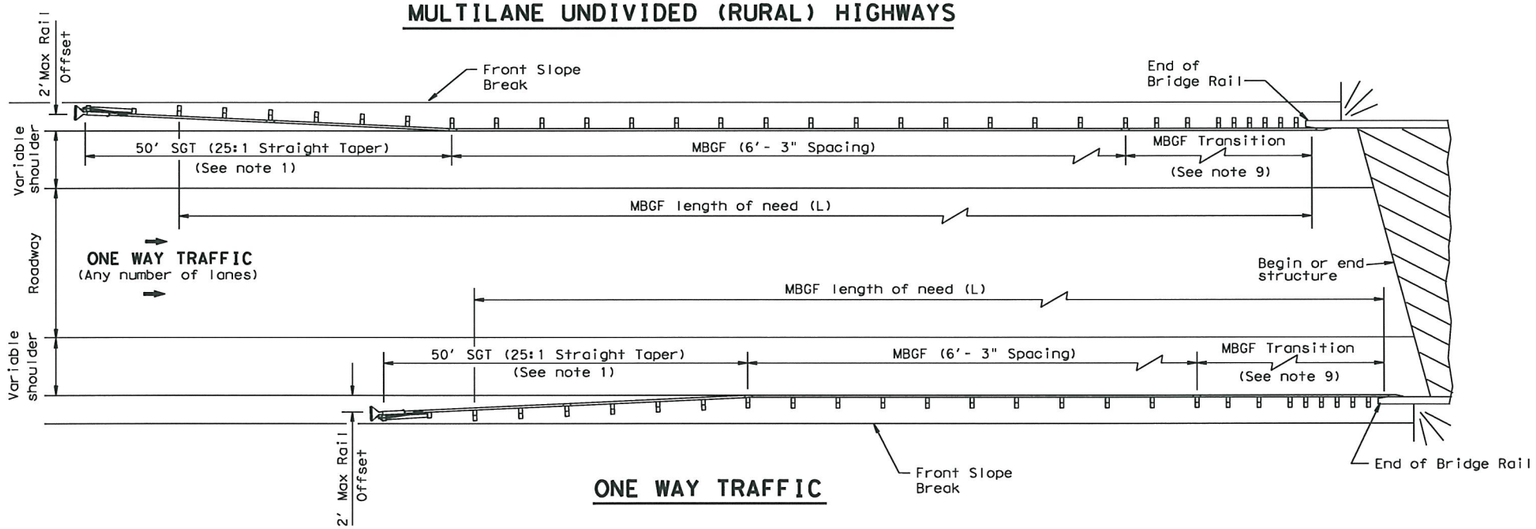

ONE WAY TRAFFIC

GENERAL NOTES

1. For more detail: See MBGF, SGT, and MBGF Transition standard sheets.
2. Quantities of metal beam guard fence (MBGF) at individual bridge ends are shown elsewhere in plans.
3. Use average daily traffic (ADT) for the current year to determine MBGF length of need in accordance with the Roadway Design Manual unless otherwise specified. Where significant traffic volume growth is anticipated on low volume (0-750 ADT) highways, use length determinations for the higher volume category.
4. MBGF may not be required to shield departure end of bridge unless other obstacles within the horizontal clearance limits or opposing traffic indicate a MBGF consideration.
5. Terminal anchor sections (TAS) are only for downstream end anchorage use, outside the horizontal clearance area of opposing traffic.
6. Direct connection of MBGF (at 6'-3" post spacing without transition) to concrete rail are only for downstream rail connections outside the horizontal clearance area of opposing traffic. (See Detail A)
7. The crown shall be widened to accommodate MBGF. Typically the "front slope" break should be 2'- 0" from the back of the MBGF post. This applies to new construction on new alignment or where existing roadway cross section is to be widened to increase roadway width. This does not apply to rehabilitation work where existing roadway crown width is to be retained (See Typical Cross Section at MBGF).
8. For restrictive bridge widths: The MBGF should be properly transitioned from the existing bridge rail to the adjoining MBGF (See MBGF Transition Standards). Metal beam guard fence at these bridge location(s) shall be flared at the rate of 25:1 or flatter, and be of the length necessary to locate the terminal end at the 2 ft."maximum" offset from the shoulder edge.
9. Transition length and post spacing will vary depending on the transition type. Transition type will be shown elsewhere in the plans.

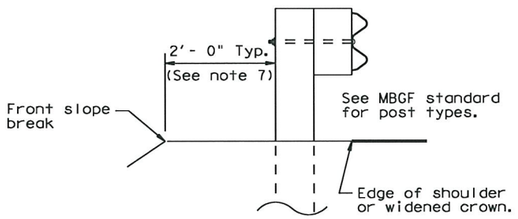

TYPICAL CROSS SECTION AT MBGF

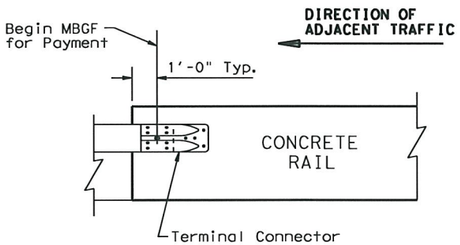

DETAIL A

All rail elements shall be lapped in the direction of adjacent traffic.

Texas Department of Transportation
Design Division Standard

BRIDGE END DETAILS

(Metal Beam Guard Fence Applications to Rigid Rails)

BED-09

FILE: bed09.dgn	DN: TxDOT	CK: AM	DW: BD	CK:
© TxDOT December 2001 REVISIONS	CONT	SECT	JOB	HIGHWAY
	0091	03	021	SH289
	DIST	COUNTY		SHEET NO.
	18			

P-20107-01159

DATE:
FILE:

DISCLAIMER:
The use of this standard is governed by the "Texas Engineering Practice Act". No warranty of any kind is made by TxDOT for any purpose whatsoever. TxDOT assumes no responsibility for the conversion of this standard to other formats or for incorrect results or damages resulting from its use.

DATE:
FILE:

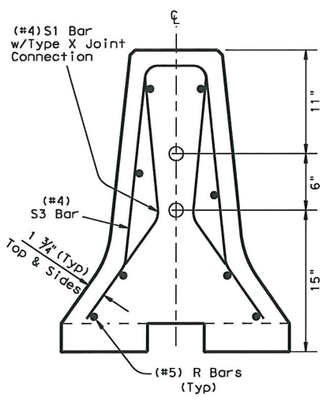

End View Precast Barrier

See sheet 2 of 3 for Joint connection Type X

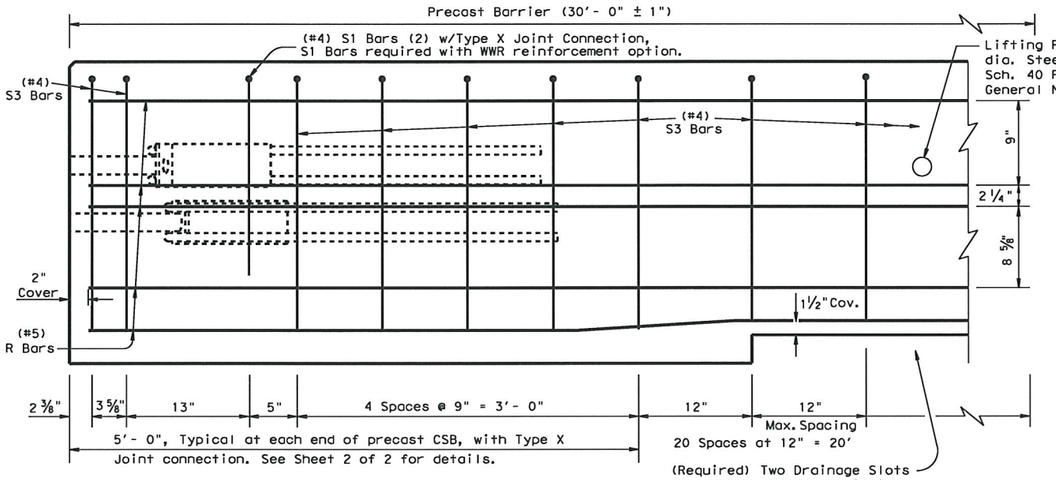

Reinforcement for Precast (CSB) Concrete Safety Barrier (Type 1)

Showing reinforcement for Joint Type X

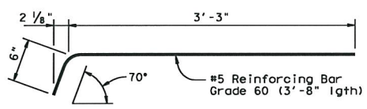

DEFORMED BAR ANCHOR DETAILS

Two (2) Bars required per assembly.
Eight (8) required per Joint.

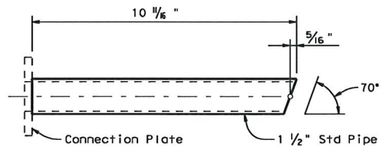

UPPER CONNECTION PIPE DETAILS

One (1) Steel Pipe required per Upper Assembly.
Two (2) required per Joint.

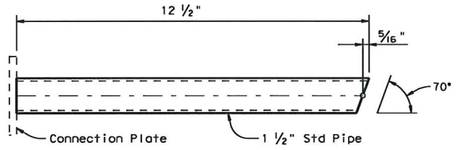

LOWER CONNECTION PIPE DETAILS

One (1) Steel Pipe required per Lower Assembly.
Two (2) required per Joint.

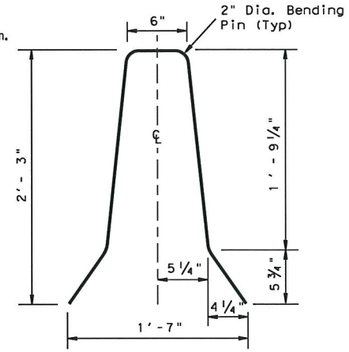

S3 Bar

#4 Bar

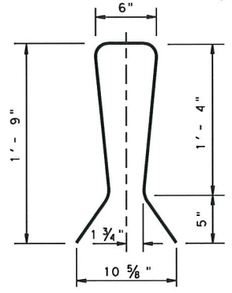

S1 Bar

#4 Bar (2)
(Joint Type X)

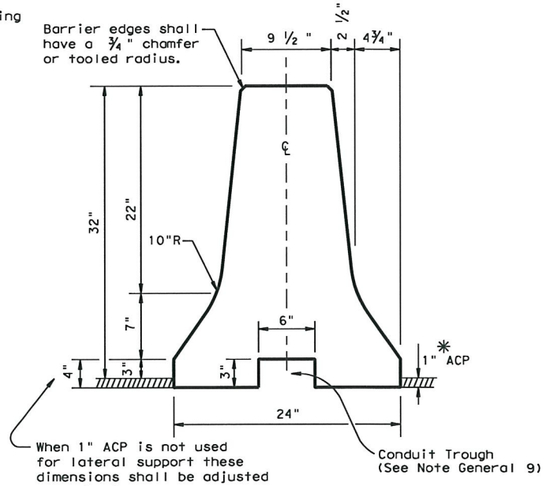

Concrete Safety Barrier

✳ When 1" ACP is "not" used as lateral support for permanent barrier placement. A permissible method of attaining the equivalent lateral support may be used, See CSB(6) sheet.

GENERAL NOTES

1. Concrete shall be Class H with a minimum compressive strength of 3,600 psi.
2. Where used, rebar reinforcement shall be Grade 60 and conform to ASTM A615.
3. Precast barrier length shall be 30 ft. unless otherwise specified on the plans.
4. All precast barrier edges shall have a 3/4" chamfer or tooled radius.
5. All concrete, reinforcement, joint connection systems, grout etc. as shown, are considered as part of the barrier payment.
6. All steel assemblies for joint shall be galvanized after fabrication in accordance with Item 445, "Galvanizing."
7. Regardless of the method of handling, barrier lifting points shall be approx. 7.5 feet from the ends of the barrier. Lifting devices and attachments to barrier sections shall be approved by the Engineer.
8. Surface finishing and grouting (where required) shall be two parts sand one part cement with enough water to make the mixture plastic. Grouting shall be done in a manner that will assure a smooth surface. Surface finishing shall be considered subsidiary to the various bid items involved.
9. Conduit trough when required shall be shown elsewhere on the plans, or as directed by the Engineer.

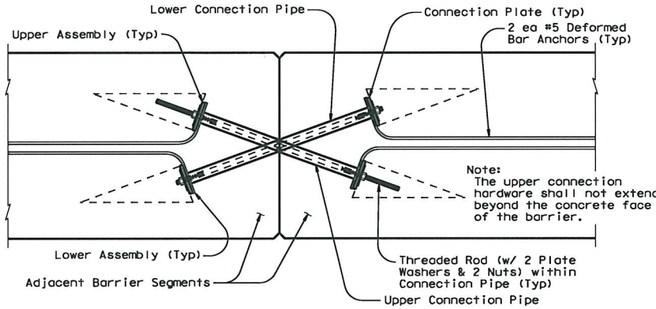

TYPE X JOINT INSTALLATION DETAIL

Barrier reinforcing and Type X Joint Leave-Out dimensions not shown for clarity.

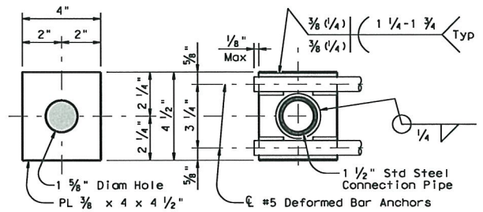

PLATE DIMENSIONS WELDING DETAILS

CONNECTION PLATE DETAILS

One (1) Plate required per assembly.
Four (4) required per Joint. All steel fittings for joint Type X shall be galvanized after fabrication in accordance with Item 445.

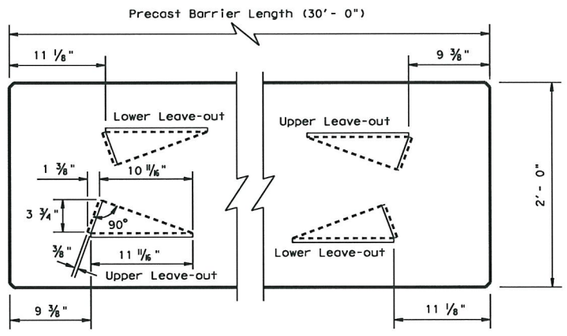

BARRIER PLAN AT END JOINTS

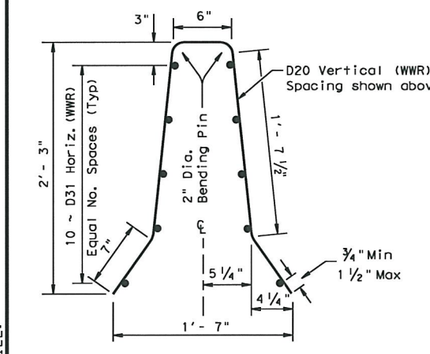

Welded Wire Reinforcement (WWR) Option for Bars R and S3

(WWR) General Notes

1. Deformed Welded Wire Reinforcement (WWR) shall conform to ASTM A497.
2. Welded wire cage may be cut or bent to accommodate the Type X joint connection and drainage slots, as directed by the Engineer.
3. All reinforcement shall comply with Item 440, "Reinforcing Steel."
4. Combinations of reinforcing steel and WWR will be permitted, as directed by the Engineer. The dimension from the end of the barrier section to the first wire shall not exceed 3".

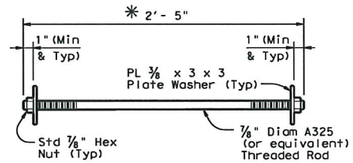

CONNECTION BOLT OR THREADED ROD DETAIL

Two (2) Threaded Rods (Or Equivalent Hex Hd. Bolts) (w/ Two (2) PL ⅜ x 3 x 3 Plate Washers & Two (2) Std Hex Nuts) required per Joint.

✳ The connection hardware shall not extend beyond the concrete face of the barrier. Hex head bolts may be provided. The proper length of all hardware should be verified.

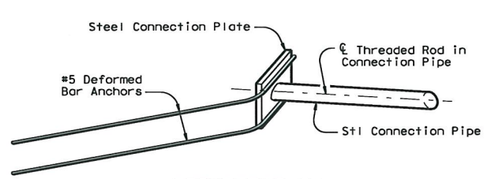

ISOMETRIC OF TYPICAL WELDED ASSEMBLY

Four (4) [2 Upper & 2 Lower] Assemblies required per Joint.

Weight of one Precast 30 ft. (CSB) segment = Approx. 6.5 Tons or 440 lbs per ft.

SHEET 1 OF 2

Texas Department of Transportation
Design Division Standard

CONCRETE SAFETY BARRIER (F-SHAPE)

PRECAST BARRIER
(TYPE 1)

CSB(1)-10

FILE: csb110.dgn	DN: TxDOT	CK: AM	DW: BD	CK:	
©TxDOT December 2010	CONT	SECT	JOB	HIGHWAY	
REVISIONS	0091	03	021	SH289	
	DIST	COUNTY		SHEET NO.	
	18				

P-20107-01160

DISCLAIMER:
The use of this standard is governed by the "Texas Engineering Practice Act". No warranty of any kind is made by TxDOT for any purpose whatsoever. TxDOT assumes no responsibility for the conversion of this standard to other formats or for incorrect results or damages resulting from its use.

DATE:
FILE:

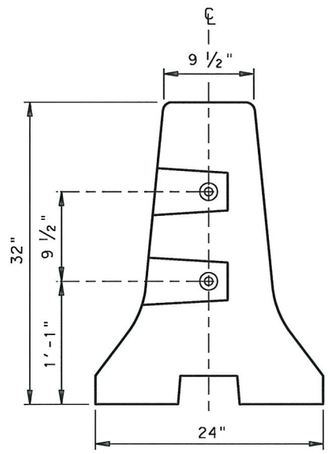

END VIEW (CSB) QUICK-BOLT

QUICK-BOLT POCKET LOCATIONS

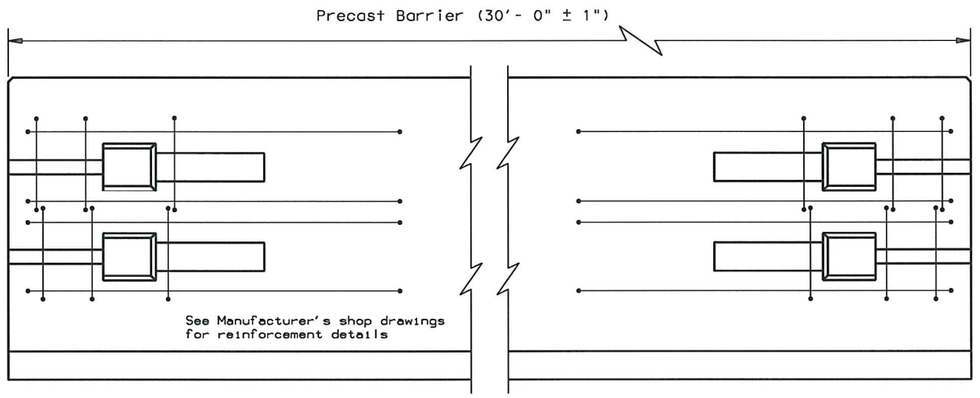

ELEVATION (CSB) QUICK-BOLT

See Manufacturer's shop drawing for additional details

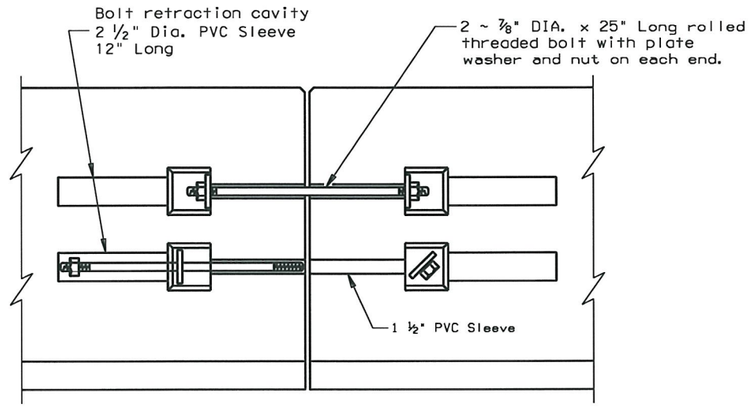

ELEVATION VIEW SHOWING JOINT CONNECTION
"QUICK-BOLT"

Joint Connection (Type Q)

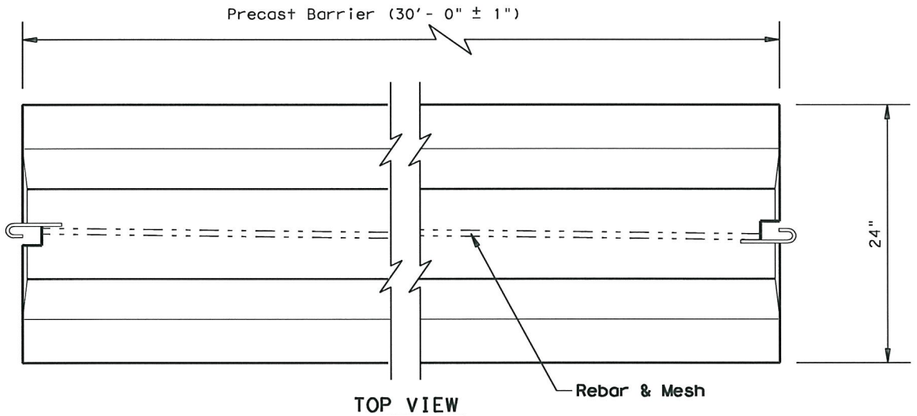

TOP VIEW

PRECAST (CSB) WITH J-J HOOKS

See Manufacturer's shop drawing for additional details

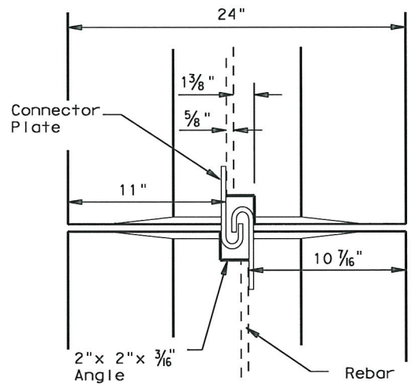

VIEW FROM ABOVE
J-J HOOK CONNECTION

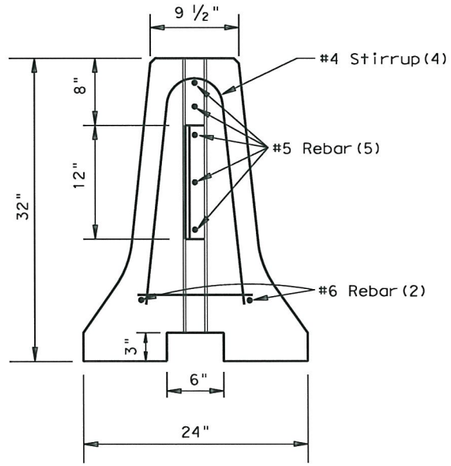

END VIEW
J-J HOOK CONNECTION

Joint Connection (Type J)

Proprietary Joint Connections (CSB)

Two proprietary joint connections are acceptable as alternates to the (Type X) connection shown, here on. These joint connections types are:

J-J Hooks by Easi-Set Industries, (800)547-4045
Quick-Bolt by Bexar Concrete, (210)497-3773

If one of these connection systems are exclusively specified in the plans, prior approval for sole source use must be obtained. Details of the connection components and barrier reinforcement for these systems, will be shown on the manufacturer's shop drawing(s) furnished to the Engineer.

Texas Department of Transportation
Design Division Standard

CONCRETE SAFETY BARRIER (F-SHAPE)

PRECAST BARRIER
(TYPE 1)

CSB(1)-10

FILE: csb110.dgn	DN: TxDOT	CK: AM	DW: BD	CK:	
©TxDOT December 2010	CONT	SECT	JOB	HIGHWAY	
REVISIONS	0091	03	021	SH289	
	DIST	COUNTY		SHEET NO.	
	18				

P-201407-01161

DISCLAIMER:
The use of this standard is governed by the "Texas Engineering Practice Act". No warranty of any kind is made by TxDOT for any purpose whatsoever. TxDOT assumes no responsibility for the conversion of this standard to other formats or for incorrect results or damages resulting from its use.

DATE:
FILE:

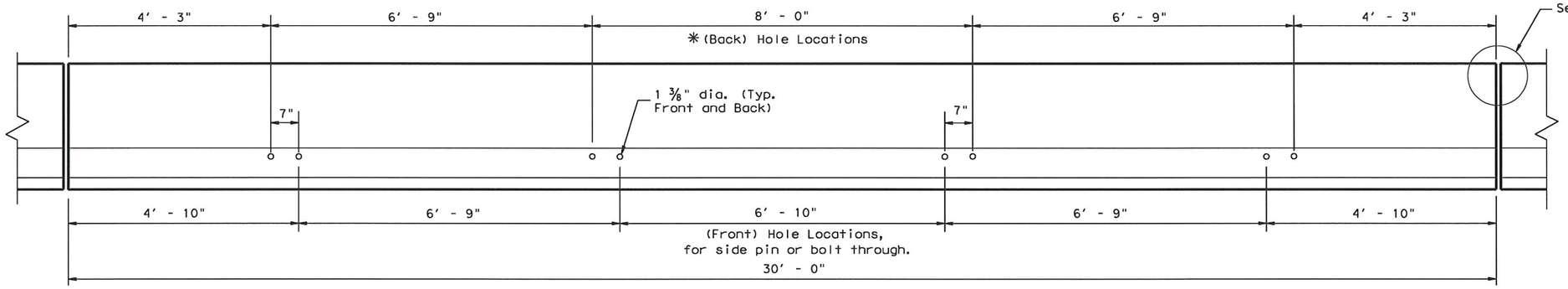

DETAIL 1

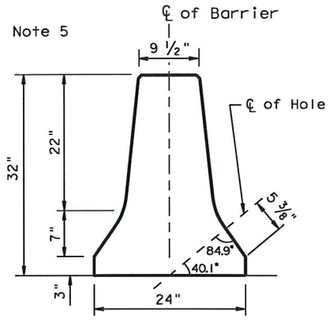

HOLE LOCATION DETAIL

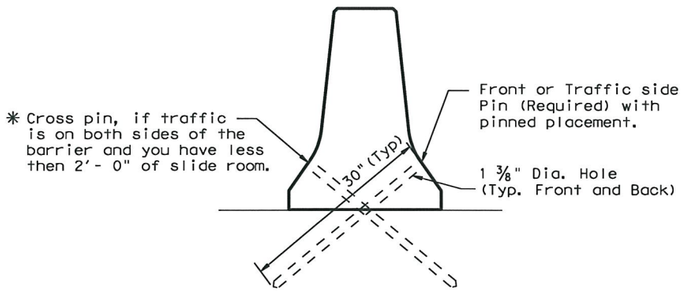

DETAIL 2

Placement on (ACP)
Asphalt Concete Pavement
or Treated Base Material
(30" Pin required)

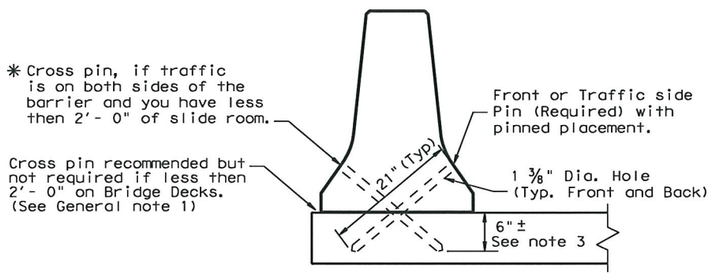

DETAIL 3

Bridge Deck or CRCP
(21" pin required)

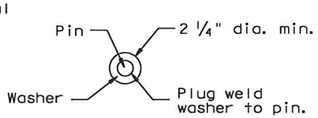

VIEW A-A

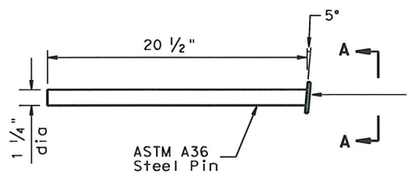

Steel washer welded to pin at 5° angle so that the washer is flush to the barrier surface. (See View A-A)

(21") PIN DETAIL

See Detail 3

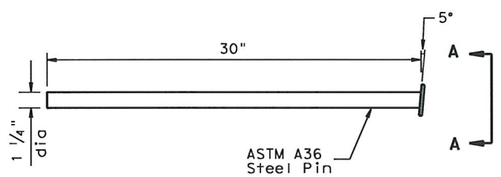

(30") PIN DETAIL

See Detail 2

CORE DRILLING EXISTING BARRIER

Core drilling existing concrete barrier is permitted. Holes shall be drilled with coring or masonry drilling type equipment. Percussion (star) drilling shall not be used. A special drill bit (to cut through existing reinforcing) will likely be required. Spalls in the concrete exceeding 1/2" shall be patched.

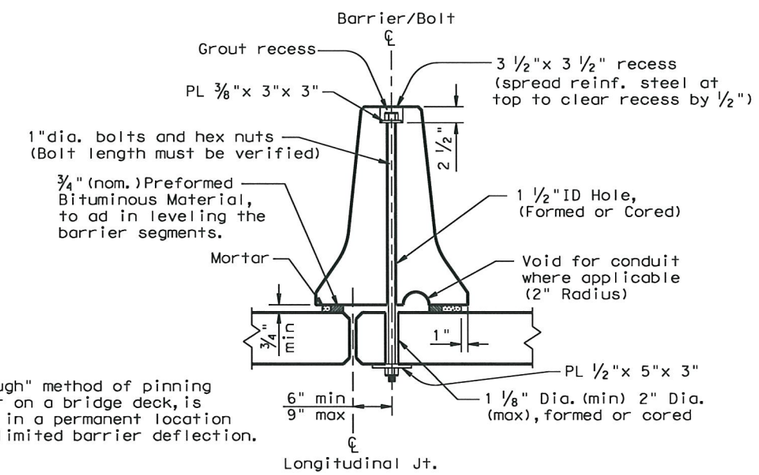

Note:
The "Bolt Through" method of pinning precast barrier on a bridge deck, is primarily used in a permanent location that requires limited barrier deflection.

PRECAST CSB (BOLT THROUGH) PLACEMENT OVER LONGITUDINAL EXPANSION JOINT

For bolt through locations, use the (Front) hole locations shown on Detail 1.

GENERAL NOTES

1. These details provide a method of laterally restraining precast concrete barrier to limit deflections under normally expected passenger vehicle impacts. These details are intended for use in work zones, primarily on bridge decks, or pavement where temporary barrier must be placed less then 2 ft. from the longitudinal edge of the deck or dropoff and parallel to the direction of travel. Other applications of these details are acceptable as directed by the Engineer.
2. Each precast concrete barrier section shall have a minimum of four or total of eight 1 3/8" ID, holes formed or cored through the barrier. The center lines of the holes are shown in the hole location detail. If rebar is encountered, the entry point may be shifted 2" plus or minus longitudinally along the barrier. The eight holes are spaced along the length of the barrier as shown in Detail 1.
3. The drilling of the travel surface is accomplished by placing the pre-drilled barrier section on the travel surface in the desired position. Then the hole is drilled with the bit passing though the hole in the barrier. The bit is to be inserted into the hole in the barrier so that the travel surface is drilled to a point which is slightly more than the pin length.
4. Note that steel washers have been welded to the top of the steel pins to aid in the removal of the pins, when the barrier is removed.
5. See CSB(1) standard sheets for reinforcement requirements and joint connection types.
6. The forming or coring of holes in the barrier, drilling of holes in bridge deck or pavement, fabrication and materials for the 1 1/4" pins, installation of pins, and any repair to the barrier shall be considered as subsidiary to the barrier bid items.
7. The barrier and travel surface will be repaired as directed by the Engineer in accordance with Item 429, "Concrete Structure Repair."
8. Provide galvanized bolts, nuts, and plate washers. All steel pins shall be galvanized after fabrication in accordance with Item 445, "Galvanizing."
9. Weight of barrier is approx. 440 lbs per foot.

Texas Department of Transportation
Design Division Standard

CONCRETE SAFETY BARRIER (F-SHAPE)

PRECAST BARRIER
(TYPE 1)
PINNED PLACEMENT

CSB(7)-10

FILE: csb710.dgn	DN: TxDOT	CK: AM	DW: BD	CK:
© TxDOT December 2010	CONT	SECT	JOB	HIGHWAY
REVISIONS	0091	03	021	SH289
	DIST	COUNTY		SHEET NO.
	18			

P-2011107-0162

DISCLAIMER:
The use of this standard is governed by the "Texas Engineering Practice Act". No warranty of any kind is made by TxDOT for any purpose whatsoever. TxDOT assumes no responsibility for the conversion of this standard to other formats or for incorrect results or damages resulting from its use.

DATE:
FILE:

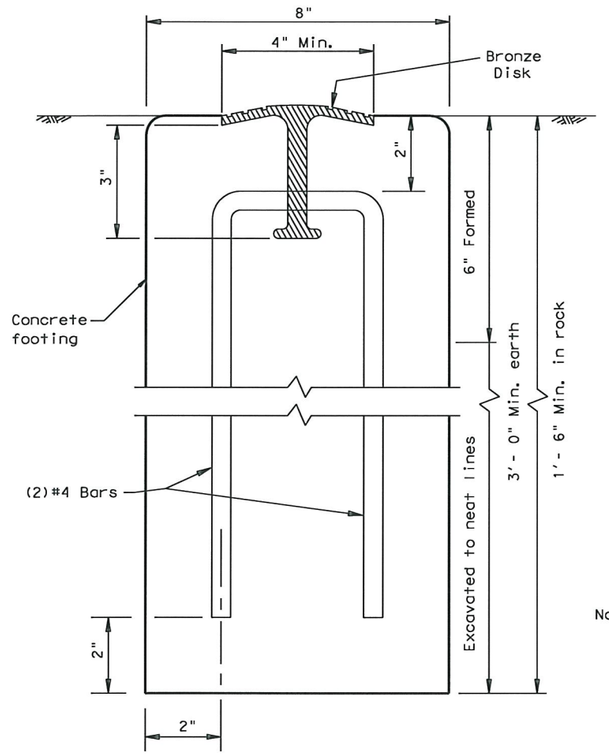

SECTION A-A

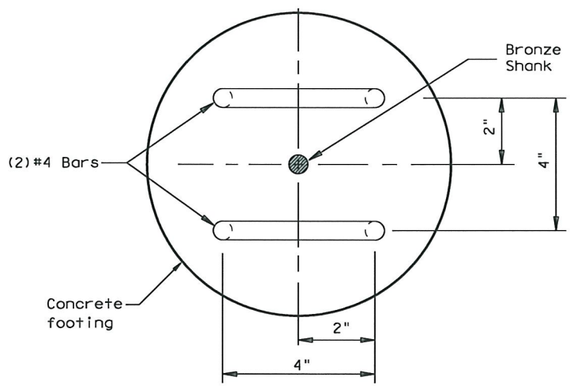

CROSS SECTION THRU MARKER

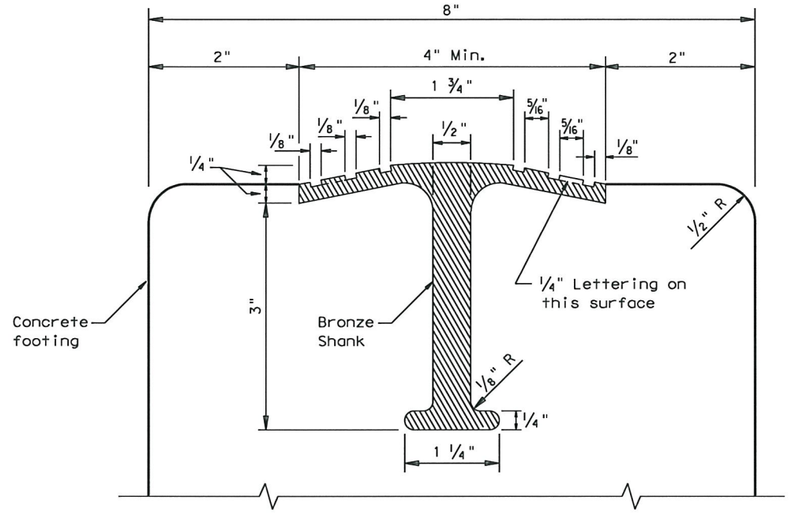

SECTION THRU TOP OF ROW MARKER

Note:
Measurement of grooves on face of disk may vary slightly. Top surface may be arched.

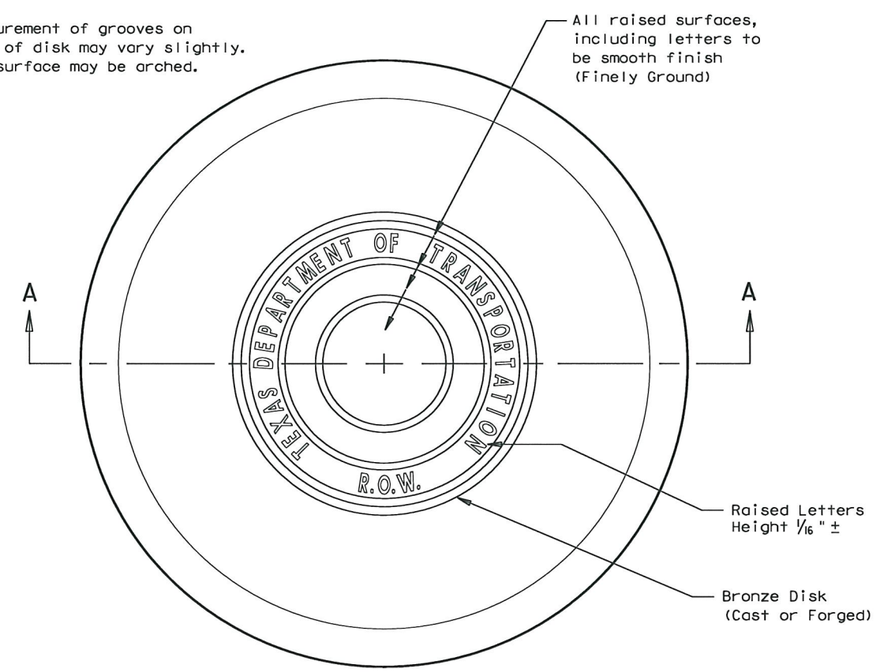

TOP VIEW OF ROW MARKER

GENERAL NOTES

1. All materials and construction shall be in accordance with Item 538, "Right of way markers."
2. Right-of-Way marker concrete shall be poured in place. The bronze disks shall be set to the correct line and grade, as directed by the Engineer.
3. The bronze disk shall be of architectural bronze with the following composition: Copper 85%, Tin 5%, Lead 5%, Zinc 5%. Excavation of the marker locations shall be made of uniform lines except for the top of 6 inches which shall be formed with removable forms. The top part of the marker around the bronze disk shall receive a trowel finish.
4. Once the concrete has set, the Engineer will stencil the required survey data and, with a chisel or center punch, cut across marker the exact location of the Right-of-Way line in the bronze disk.

Texas Department of Transportation
Design Division Standard

RIGHT-OF-WAY MARKER

M-10

FILE: m10.dgn		DN: TxDOT	CK: AM	DW: BD/VP		CK: VP	
©TxDOT February 1992		CONT	SECT	JOB		HIGHWAY	
REVISIONS		0091	03	021		SH289	
		DIST	COUNTY			SHEET NO.	
		18					

P-2011107-01163

DISCLAIMER:
The use of this standard is governed by the "Texas Engineering Practice Act". No warranty of any kind is made by TxDOT for any purpose whatsoever. TxDOT assumes no responsibility for the conversion of this standard to other formats or for incorrect results or damages resulting from its use.

DATE:
FILE:

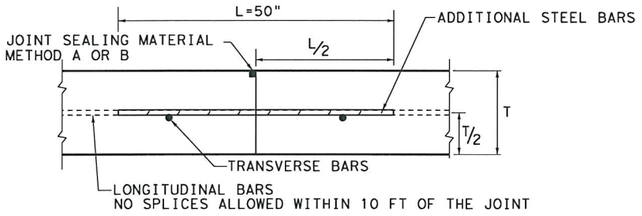

TRANSVERSE CONSTRUCTION JOINT
SECTION X - X

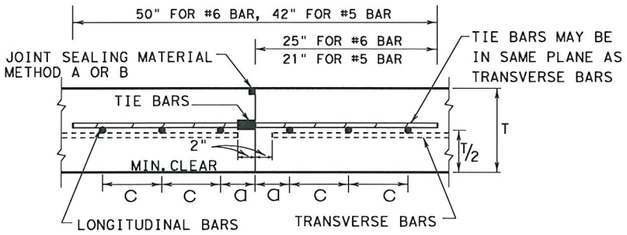

LONGITUDINAL CONSTRUCTION JOINT
SECTION Y - Y

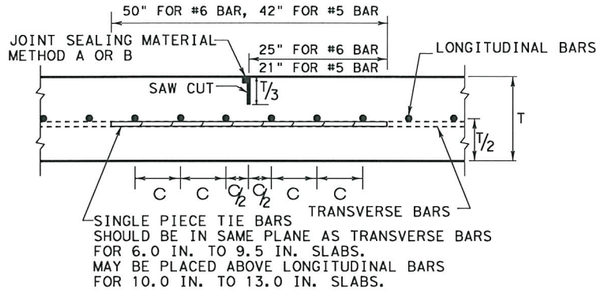

LONGITUDINAL CONTRACTION JOINT
SECTION Z - Z

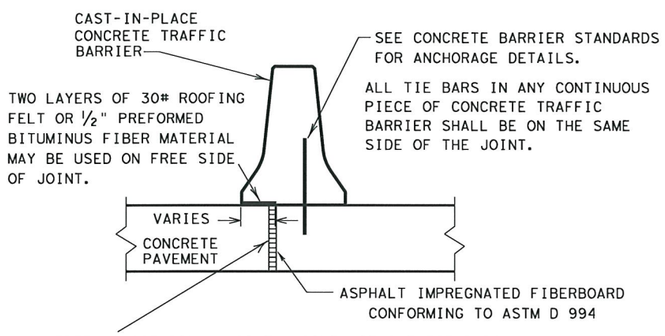

FREE LONGITUDINAL JOINT DETAIL

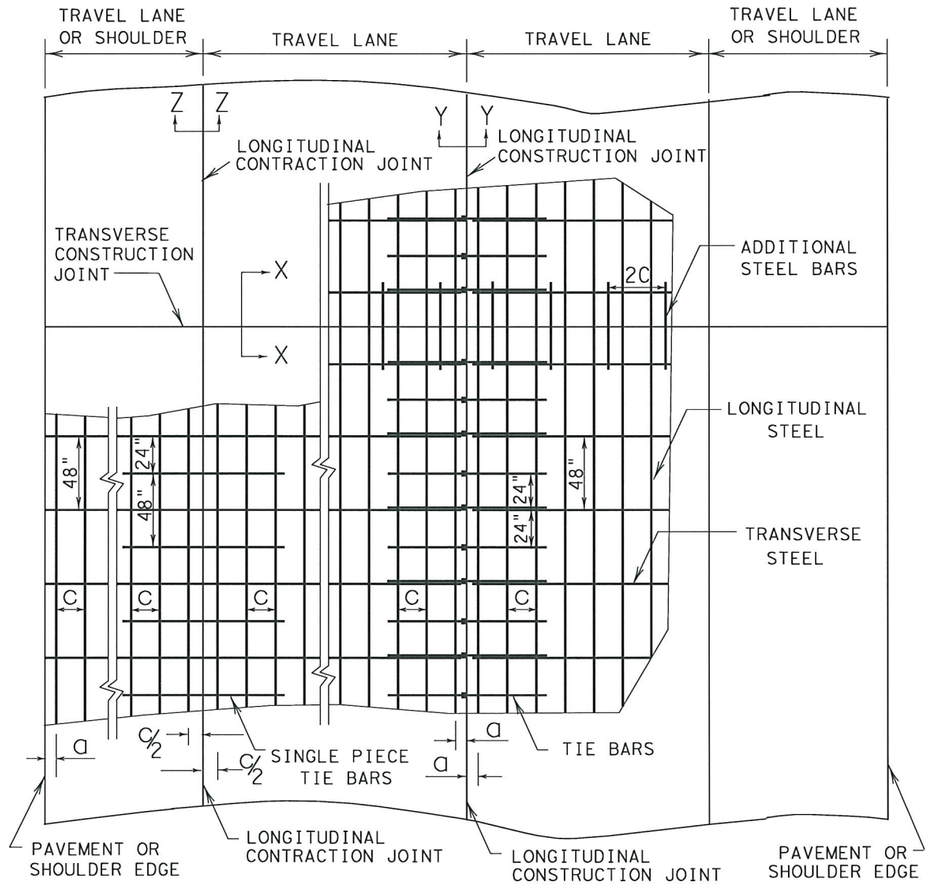

TYPICAL PAVEMENT LAYOUT

PLAN VIEW (NOT TO SCALE)

GENERAL NOTES

1. DETAILS FOR PAVEMENT WIDTH, PAVEMENT THICKNESS AND THE CROWN CROSS-SLOPE SHALL BE SHOWN ELSEWHERE IN THE PLANS. PAVEMENTS WIDER THAN 100 FT. WITHOUT A FREE LONGITUDINAL JOINT, ARE NOT COVERED BY THIS STANDARD.
2. THE DETAIL FOR THE JOINT SEALANT AND RESERVOIR IS SHOWN ON STANDARD SHEET "CONCRETE PAVING DETAILS, JOINT SEALS."
3. ALL THE REINFORCING STEEL AND TIE BARS SHALL BE DEFORMED STEEL BARS CONFORMING TO ASTM A 615 (GRADE 60) OR ASTM A 996 (GRADE 60). STEEL BAR SIZES SHALL CONFORM TO TABLE NO. 1 & 2.
4. STEEL BAR PLACEMENT TOLERANCE SHALL BE +/- 1 IN. HORIZONTALLY AND +/- 0.5 IN. VERTICALLY. CALCULATED AVERAGE BAR SPACING (CONCRETE PLACEMENT WIDTH / NUMBER OF LONGITUDINAL BARS) SHALL CONFORM TO TABLE NO.1 AND AS SPECIFIED.
5. PAVEMENT WIDTHS OF MORE THAN 15 FT. SHALL HAVE A LONGITUDINAL JOINT (SECTION Z-Z OR SECTION Y-Y). THESE JOINTS SHALL BE LOCATED WITHIN 6 IN. OF THE LANE LINE UNLESS THE JOINT LOCATION IS SHOWN ELSEWHERE ON THE PLANS.
6. THE SAW CUT DEPTH FOR THE LONGITUDINAL CONTRACTION JOINT SHALL BE ONE THIRD OF THE SLAB THICKNESS.
7. WHEN APPROVED BY THE ENGINEER, SINGLE PIECE TIE BARS MAY BE USED BY INSERTING INTO PLASTIC CONCRETE AT LONGITUDINAL CONSTRUCTION JOINTS.
8. WHEN TYING CONCRETE GUTTER AT A LONGITUDINAL JOINT, THE TIE BAR LENGTH OR POSITION MAY BE ADJUSTED. PROVIDE 3 IN. OF CONCRETE COVER FROM THE BACK OF GUTTER TO THE END OF TIE BAR.
9. MISSING OR DAMAGED TIE BARS SHALL BE REPLACED BY DRILLING AND EPOXY GROUTING AT THE CONTRACTOR'S EXPENSE.
10. OMIT TIE BARS LOCATED WITHIN 18 IN. OF THE TRANSVERSE CONSTRUCTION JOINTS. USE HAND-OPERATED IMMERSION VIBRATORS TO CONSOLIDATE THE CONCRETE ADJACENT TO ALL FORMED JOINTS.
11. OBTAIN THE ENGINEER'S WRITTEN APPROVAL, IF THE CONCRETE MIX DESIGN USES MORE THAN 5.5 SACKS/CY.

TABLE NO. 2 TRANSVERSE STEEL AND TIE BARS

SLAB THICKNESS (IN.)	TRANSVERSE STEEL		TIE BARS AT LONGITUDINAL CONTRACTION JOINT		TIE BARS AT LONGITUDINAL CONSTRUCTION JOINT	
	BAR SIZE	SPACING (IN.)	BAR SIZE	SPACING (IN.)	BAR SIZE	SPACING (IN.)
6.0 - 7.5	#5	48	#5	48	#5	24
8.0 - 13.0	#5	48	#6	48	#6	24

TABLE NO. 1 LONGITUDINAL STEEL

SLAB THICKNESS AND BAR SIZE		REGULAR STEEL BARS	FIRST SPACING AT EDGE OR JOINT	ADDITIONAL STEEL BARS AT TRANSVERSE CONSTRUCTION JOINT	
T (IN.)	BAR SIZE	SPACING c (IN.)	SPACING a (IN.)	SPACING 2 x c (IN.)	LENGTH L (IN.)
6.0	#5	7.5	3 TO 4	15	50
6.5	#5	7.0	3 TO 4	14	50
7.0	#5	6.5	3 TO 4	13	50
7.5	#5	6.0	3 TO 4	12	50
8.0	#6	9.0	3 TO 4	18	50
8.5	#6	8.5	3 TO 4	17	50
9.0	#6	8.0	3 TO 4	16	50
9.5	#6	7.5	3 TO 4	15	50

TABLE NO. 1 LONGITUDINAL STEEL (Cont.)

SLAB THICKNESS AND BAR SIZE		REGULAR STEEL BARS	FIRST SPACING AT EDGE OR JOINT	ADDITIONAL STEEL BARS AT TRANSVERSE CONSTRUCTION JOINT	
T (IN.)	BAR SIZE	SPACING c (IN.)	SPACING a (IN.)	SPACING 2 x c (IN.)	LENGTH L (IN.)
10.0	#6	7.0	3 TO 4	14	50
10.5	#6	6.75	3 TO 4	13.5	50
11.0	#6	6.5	3 TO 4	13	50
11.5	#6	6.25	3 TO 4	12.5	50
12.0	#6	6.0	3 TO 4	12	50
12.5	#6	5.75	3 TO 4	11.5	50
13.0	#6	5.5	3 TO 4	11	50

Texas Department of Transportation
Design Division Standard

CONTINUOUSLY REINFORCED CONCRETE PAVEMENT

ONE LAYER STEEL BAR PLACEMENT T - 6 to 13 INCHES

CRCP(1)-09

FILE: crcp109.dgn	DN: TxDOT	CK: LL	DW: HC	CK:
©TxDOT November 2009	CONT	SECT	JOB	HIGHWAY
REVISIONS	0091	03	021	SH289
	DIST	COUNTY		SHEET NO.
	18	ELLIS		164

P-201107-01

DISCLAIMER:
The use of this standard is governed by the "Texas Engineering Practice Act". No warranty of any kind is made by TxDOT for any purpose whatsoever. TxDOT assumes no responsibility for the conversion of this standard to other formats or for incorrect results or damages resulting from its use.

DATE:
FILE:

FOR TERMINAL ANCHOR SYSTEMS CONTAINING LESS THAN FIVE LUGS, THE PROPER DIMENSIONS CAN BE OBTAINED BY REMOVAL OF ONE OR MORE OF THESE 17'- 0" LUG SECTIONS.

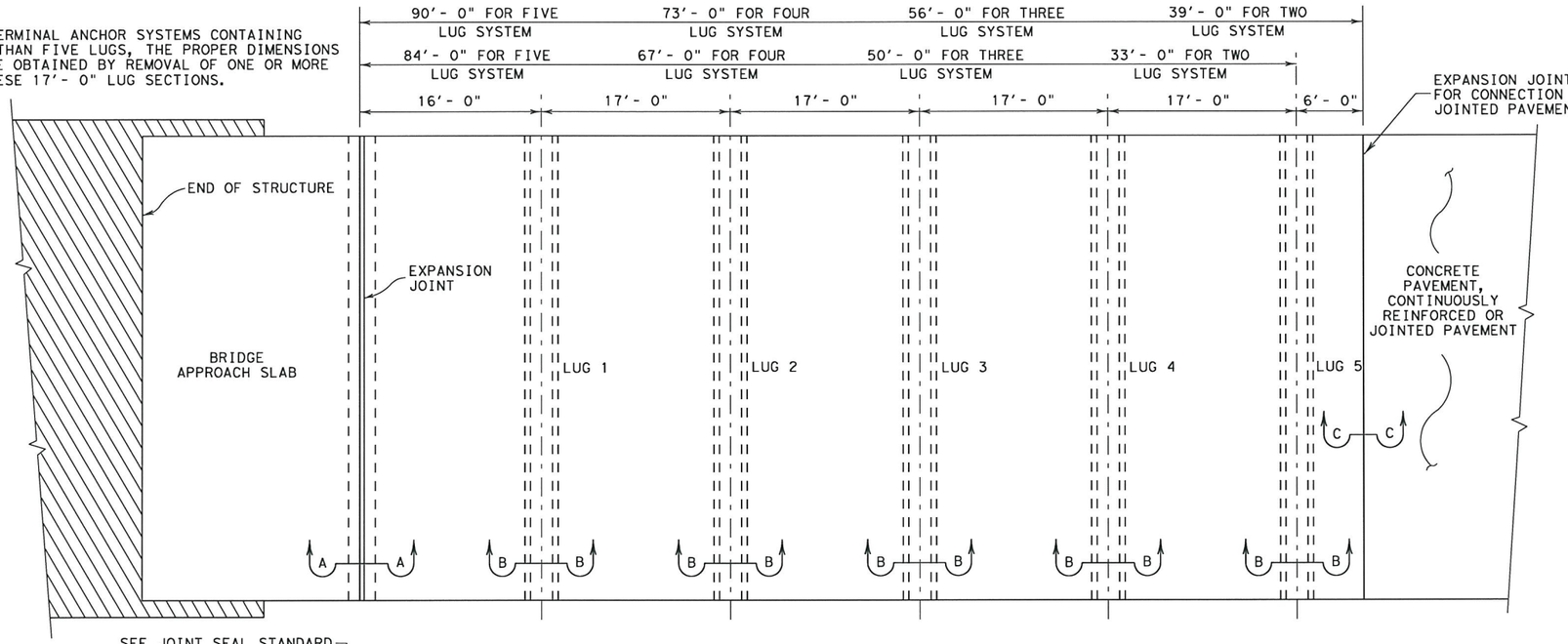

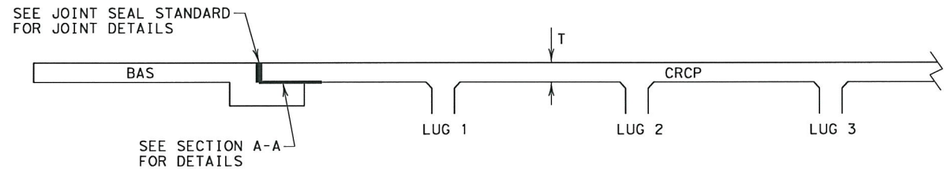

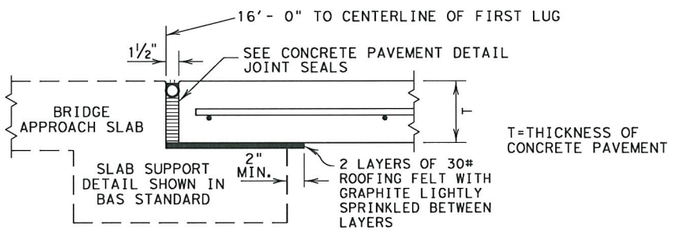

EXPANSION JOINT TYPICAL SECTION A-A

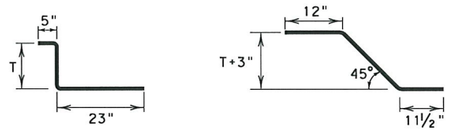

Ⓖ **#5 BAR AT 18"** Ⓗ **#5 BAR AT 18"**

BAR SPACING SHALL AVERAGE 18" SPACING MAY VARY ± 2"TO FIT BETWEEN PAVEMENT STEEL

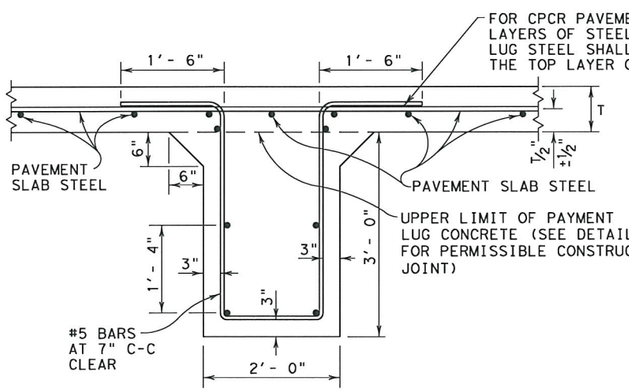

ANCHOR LUG DETAIL

SECTION B-B

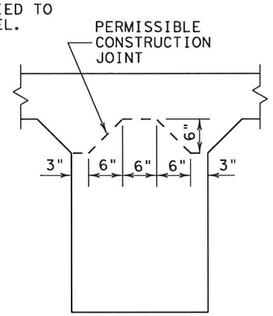

ANCHOR LUG DETAIL SHOWING PERMISSIBLE CONSTRUCTION JOINT

GENERAL NOTES

1. THE BRIDGE APPROACH SLAB DETAILS ARE AS SHOWN ELSEWHERE IN THE PLANS.
2. THE LOCATIONS OF THE TERMINAL ANCHORAGE SYSTEMS AND NUMBER OF LUGS PER SYSTEM SHALL BE AS SHOWN ELSEWHERE IN THE PLANS.
3. DETAILS AS TO PAVEMENT SLAB WIDTH, THICKNESS, AND CROWN CROSS-SLOPE SHALL BE AS SHOWN ELSEWHERE ON THE PLANS.
4. THE CONCRETE PAVEMENT SLAB SHALL CONTINUE ACROSS THE ANCHOR LUGS AS SHOWN. ALL REQUIREMENTS AS TO CONSTRUCTION MEASUREMENT, AND PAYMENT FOR THE PAVEMENT SLAB SHALL BE MADE UNDER THE ITEM "CONCRETE PAVEMENT." DETAILS FOR THE SLAB SHALL BE SHOWN IN THE "CONCRETE PAVEMENTS DETAILS, CONTINUOUSLY REINFORCED STEEL BARS.
5. REINFORCING FOR THE ANCHOR LUGS SHALL BE STEEL CONFORMING TO ASTM DESIGNATION A615, GRADE 60 OR A-616, GRADE 60. BARS TO BE BEND SHALL BE A -615, GRADE 60. ALL STEEL IN LUGS AND SUPPORT SLAB SHALL BE #5 BARS.
6. DETAILS OF LONGITUDINAL JOINTS (TRANSVERSE JOINTS, IF NECESSARY) AND REQUIRED JOINT SEALS ARE SHOWN ON THE APPROPRIATE PAVING DETAIL SHEET.
7. TRANSVERSE CONSTRUCTION JOINTS WILL NOT BE PERMITTED WITHIN THE LIMITS OF THE ANCHOR LUGS WITHOUT THE APPROVAL OF THE ENGINEER.

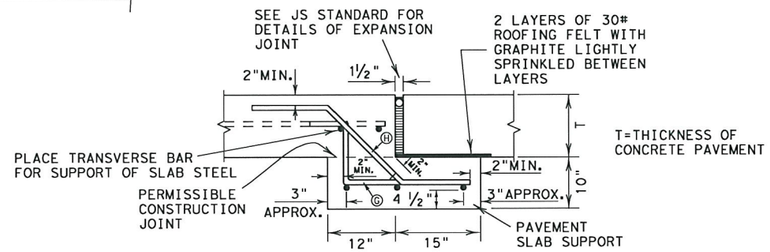

TYPICAL SECTION C-C
EXPANSION JOINT FOR JOINTED CONCETE PAVEMENT TERMINAL

MATERIAL	ESTIMATING QUANTITIES FOR ANCHOR LUG	
	24 FOOT LENGTH	PER FOOT OF LENGTH
EXCAVATION AND CONCRETE (CU. YD.)	6.2	0.26
*STEEL (LBS.)	631	26.3

QUANTITIES FOR SUPPORT SLAB USED WITH JOINTED CONCRETE (CONCRETE, EXCAVATION AND STEEL PART OF CONCRETE PAVEMENT ITEM		
MATERIAL	24 FOOT LENGTH	PER FOOT OF LENGTH
EXCAVATION AND CONCRETE (CU. YD.)	1.7	0.07
*STEEL (LBS.)	144	6

*STEEL WEIGHT WILL INCREASE SLIGHTLY FOR PAVEMENTS THICKER THAN 10".

Texas Department of Transportation
Design Division Standard

TERMINAL ANCHORAGE FOR CONCRETE PAVEMENT

TA(CP)-99

FILE: tacp99.dgn	DN: TxDOT	CK: LJB	DW: BD	CK:
©TxDOT September 1994	CONT	SECT	JOB	HIGHWAY
REVISIONS	0091	03	021	SH289
	DIST	COUNTY		SHEET NO.
	18	ELLIS		P-20107-01165

DISCLAIMER:
The use of this standard is governed by the "Texas Engineering Practice Act". No warranty of any kind is made by TxDOT for any purpose whatsoever. TxDOT assumes no responsibility for the conversion of this standard to other formats or for incorrect results or damages resulting from its use.

DATE:
FILE:

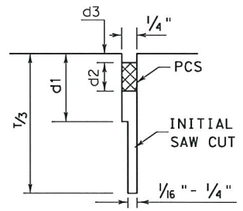

SAWED
LONGITUDINAL JOINT

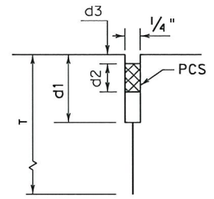

LONGITUDINAL
CONSTRUCTION JOINT

LONGITUDINAL JOINT SEALS

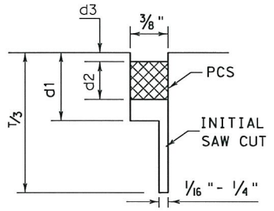

SAWED
CONTRACTION JOINT

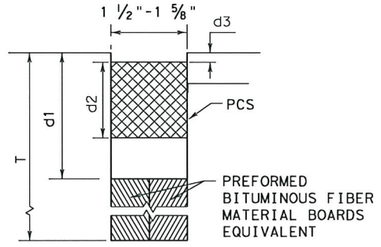

FORMED
FORMED EXPANSION JOINT

TRANSVERSE JOINT SEALS

METHOD A: PREFORMED COMPRESSION SEALS (PCS)
(CLASS 6 PREFORMED JOINT SEALANT)

GENERAL NOTES FOR METHOD "A"

1. UNLESS OTHERWISE SHOWN IN THE PLANS, EITHER METHOD "A" OR METHOD "B" MAY BE USED.
2. THE LOCATION OF JOINTS SHALL BE AS SHOWN ELSEWHERE IN THE PLANS.
3. DIMENSIONS d1, d2, AND d3 SHALL BE IN ACCORDANCE WITH THE PREFORMED COMPRESSION SEAL MANUFACTURES RECOMMENDATION.
4. THE JOINT RESERVOIR FOR SEALANT SHALL BE SAWED UNLESS OTHERWISE SHOWN ON THE PLANS FOR THE LONGITUDINAL AND TRANSVERSE CONSTRUCTION AND THE TWO SAWED JOINTS.
5. THE JOINTS SHALL BE CLEANED IN ACCORDANCE WITH THE ITEM 438 AND PRIOR TO BEGINNING OPERATIONS, THE CONTRACTOR SHALL SUBMIT A STATEMENT FROM THE SEALANT MANUFACTURER SHOWING THE RECOMMENDED EQUIPMENT AND INSTALLATION PROCEDURES TO BE USED.
6. THE SAW CUT FOR THE LONGITUDINAL JOINT SHALL BE ONE FOURTH THE SLAB THICKNESS WHEN CRUSHED LIMESTONE IS USED AS THE COARSE AGGREGATE.

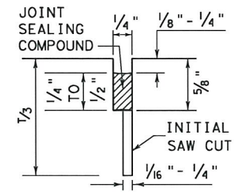

SAWED
LONGITUDINAL JOINT

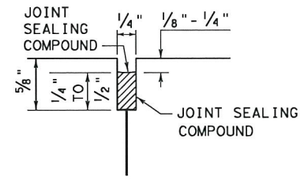

LONGITUDINAL OR TRANSVERSE
CONSTRUCTION JOINT

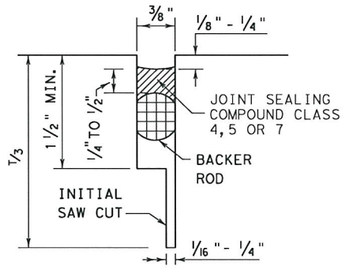

TRANSVERSE SAWED
CONTRACTION JOINT

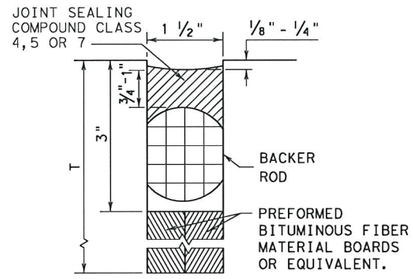

TRANSVERSE FORMED
EXPANSION JOINT

METHOD B: JOINT SEALING COMPOUND

GENERAL NOTES FOR METHOD "B"

1. UNLESS OTHERWISE SHOWN IN THE PLANS, EITHER METHOD "A" OR METHOD "B" MAY BE USED.
2. THE LOCATION OF JOINTS SHALL BE AS SHOWN ELSEWHERE IN THE PLANS.
3. THE ENGINEER SHALL SELECT A TARGET PLACEMENT THICKNESS FOR THE SEALANT DETAILS WHICH SHOW RANGES IN THICKNESS. THE TARGET THICKNESS WILL NORMALLY BE THE MIDPOINT OF THE RANGE.
4. THE JOINT RESERVOIR FOR SEALANT SHALL BE SAWED UNLESS OTHERWISE SHOWN ON THE PLANS FOR THE LONGITUDINAL AND TRANSVERSE CONSTRUCTION AND THE TWO SAWED JOINTS.
5. THE JOINTS SHALL BE CLEANED IN ACCORDANCE WITH THE ITEM 438 AND PRIOR TO BEGINNING OPERATIONS, THE CONTRACTOR SHALL SUBMIT A STATEMENT FROM THE SEALANT MANUFACTURER SHOWING THE RECOMMENDED EQUIPMENT AND INSTALLATION PROCEDURES TO BE USED.
6. THE SAW CUT FOR THE LONGITUDINAL JOINT SHALL BE ONE FOURTH THE SLAB THICKNESS WHEN CRUSHED LIMESTONE IS USED AS THE COARSE AGGREGATE.

Texas Department of Transportation
Design Division Standard

CONCRETE PAVING DETAILS
JOINT SEALS

JS-94

FILE: js94.dgn	DN: TxDOT	CK: LJB	DW: BD	CK: GLG		
© TxDOT September 1994	CONT	SECT	JOB	HIGHWAY		
REVISIONS	0091	03	021	SH289		
	DIST	COUNTY		SHEET NO.		
	18	COLLIN		166		

P-201107-01

DISCLAIMER:
The use of this standard is governed by the "Texas Engineering Practice Act". No warranty of any kind is made by TxDOT for any purpose whatsoever. TxDOT assumes no responsibility for the conversion of this standard to other formats or for incorrect results or damages resulting from its use.

DATE:
FILE:

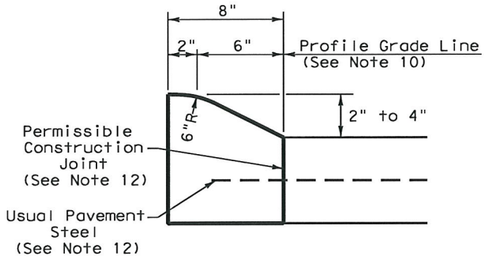

TYPE I CURB (MONOLITHIC)
2" - 4" HEIGHT

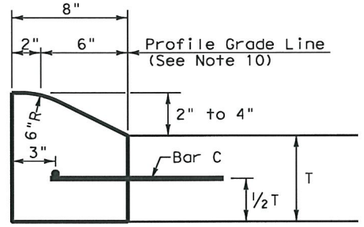

TYPE I CURB
2" - 4" HEIGHT

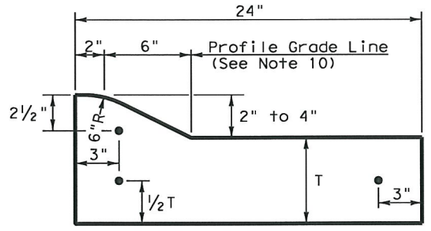

TYPE I CURB AND GUTTER
2" - 4" HEIGHT

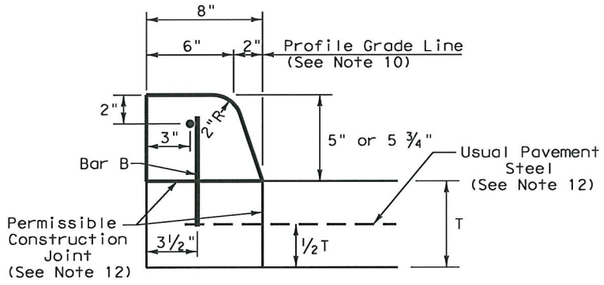

TYPE II CURB (MONOLITHIC)
5" - 5 ¾" HEIGHT

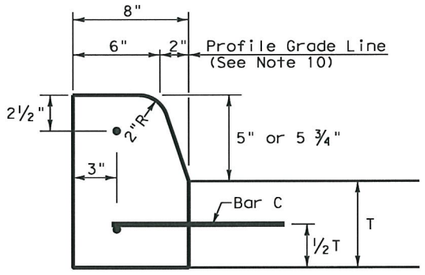

TYPE II CURB
5" - 5 ¾" HEIGHT

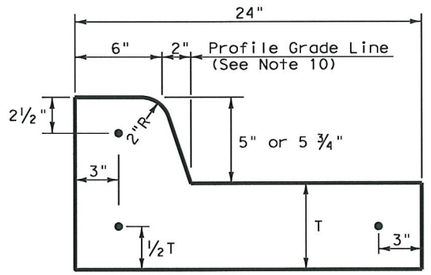

TYPE II CURB AND GUTTER
5" - 5 ¾" HEIGHT

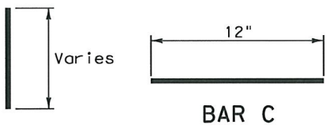

BAR B

BAR C

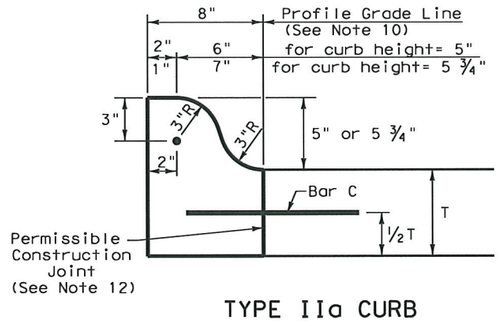

TYPE IIa CURB
5" - 5 ¾" HEIGHT

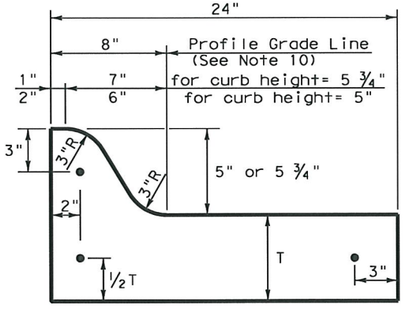

TYPE IIa CURB AND GUTTER
5" - 5 ¾" HEIGHT

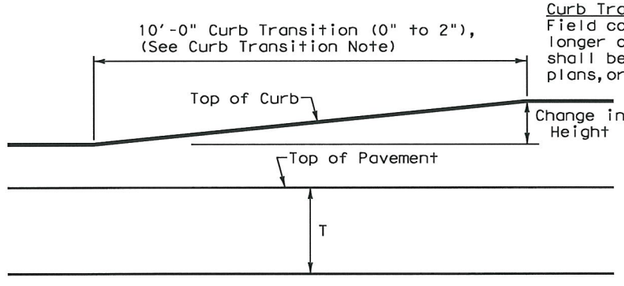

Curb Transition Note:
Field conditions may require a longer or shorter transition, and shall be shown elsewhere in the plans, or as directed by the Engineer.

CURB TRANSITION
Note: To be paid for as Highest Curb

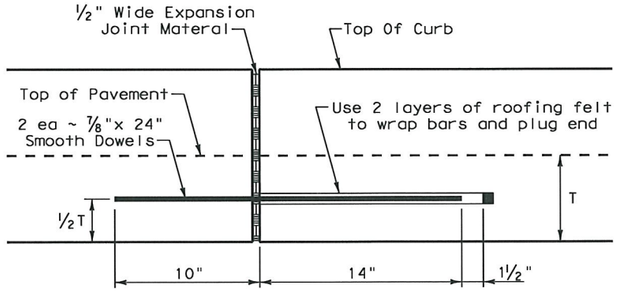

EXPANSION JOINT DETAIL

General Notes

1. All materials and construction shall be in accordance with Item 529, "Concrete Curb, Gutter, and Combined Curb and Gutter."
2. Concrete shall be Class A.
3. When reinforcing bars are used, they shall be No. 4 unless otherwise shown. The use of synthetic fiber in lieu of steel reinforcing is acceptable, provided the fiber producer is on the Department Producer List (MPL), maintained by TxDOT, Construction Division.
4. Round exposed sharp edges with a rounding tool, to a minimum radius of ¼ inch.
5. All existing curbs and driveways to be removed shall be sawed or removed at existing joints.
6. Where concrete curb is placed on existing concrete pavement, the pavement shall be drilled and the reinforcing bars grouted in place.
7. Expansion and contraction joints shall be constructed to match pavement joints in all curbs and curb and gutter adjacent to jointed concrete pavement. Where placement of curb or curb and gutter is not adjacent to concrete pavement, expansion joints shall be provided at structures, curb returns at streets, and at locations directed by The Engineer.
8. Vertical and horizontal dowel bars and transverse reinforcing bars shall be placed at four feet C~C.
9. Dimension 'T' shown is the thickness of concrete pavement. When curb is installed adjacent to flexible pavement dimension 'T' is 8" maximum.
10. Usual profile grade line. Refer to typical sections and plan-profile sheets for exact locations.
11. One-half inch expansion joint material shall be provided where curb or curb and gutter is adjacent to sidewalk or riprap.
12. When vertical permissible construction joints are used, resulting in a longitudinal construction joint in the pavement, the longitudinal pavement steel shall be placed in accordance with pavement details shown elsewhere in the plans for longitudinal construction joints. Reinforcing steel for curb section shall then conform to that required for concrete curb.

Texas Department of Transportation
Design Division Standard

CONCRETE CURB AND CURB AND GUTTER

CCCG-10A

FILE: cccg10a.dgn	DN: TxDOT	CK: AM	DW: BD	CK:
© TxDOT 1995	CONT	SECT	JOB	HIGHWAY
REVISIONS	0091	03	021	SH289
	DIST	COUNTY		SHEET NO.
	18	Ellis		P-20107-01167

DISCLAIMER:
The use of this standard is governed by the "Texas Engineering Practice Act". No warranty of any kind is made by TxDOT for any purpose whatsoever. TxDOT assumes no responsibility for the conversion of this standard to other formats or for incorrect results or damages resulting from its use.

DATE:
FILE:

TYPE 1

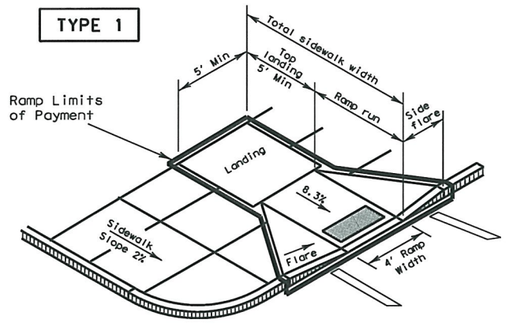

PERPENDICULAR CURB RAMP

TYPE 2

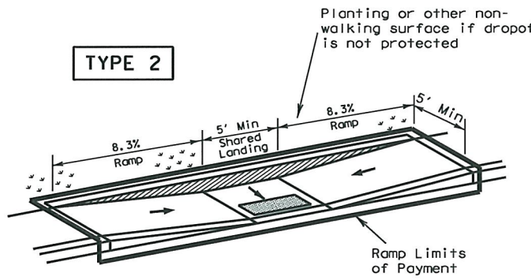

PARALLEL CURB RAMP
(Use only where water will not pond in the landing.)

TYPE 4

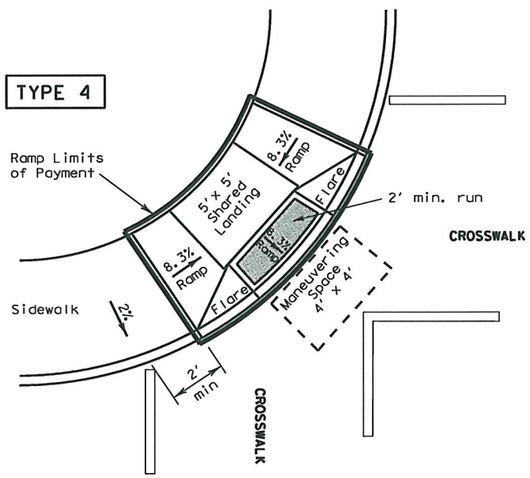

DIAGONAL COMBINATION CURB RAMP
Perpendicular to the Tangent of the Curb Radius and Contained in Crosswalk

TYPE 7

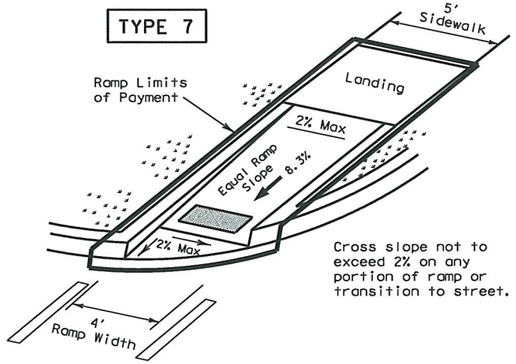

DIRECTIONAL RAMP WITHIN RADIUS
(Sidewalk set back from curb)

TYPE 8

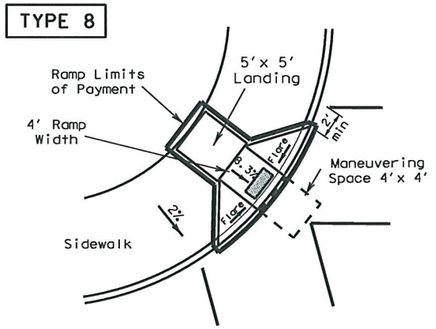

DIAGONAL CURB RAMP (FLARED SIDES)

TYPE 5

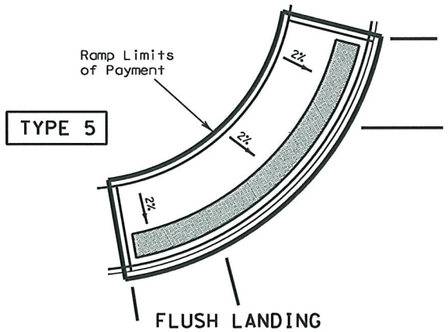

FLUSH LANDING

TYPE 9

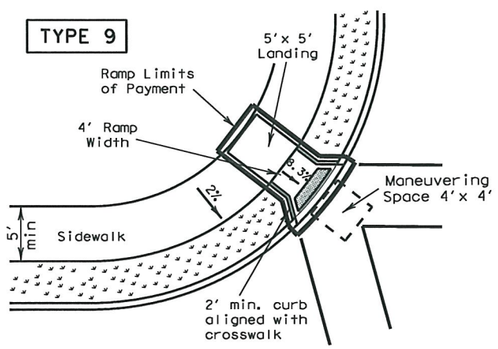

DIAGONAL CURB RAMP (RETURNED CURB)

TYPE 20

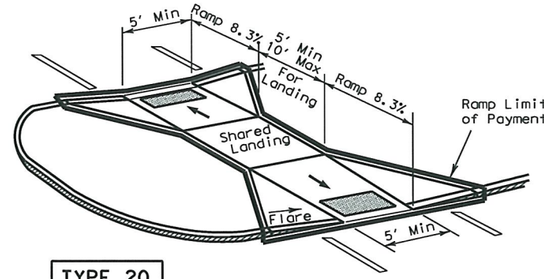

TYPE 21

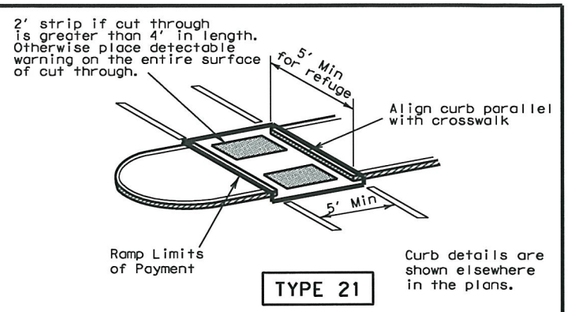

CURB RAMPS AT MEDIAN ISLANDS

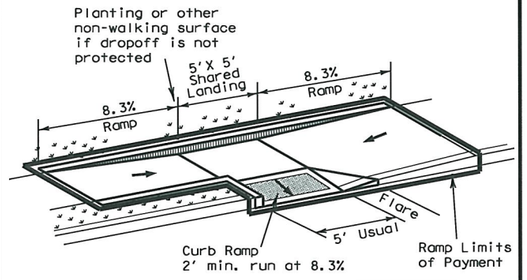

TYPE 3

TYPE 6

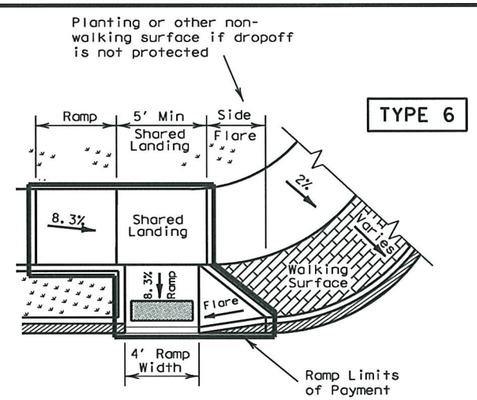

COMBINATION CURB RAMPS

TYPE 22

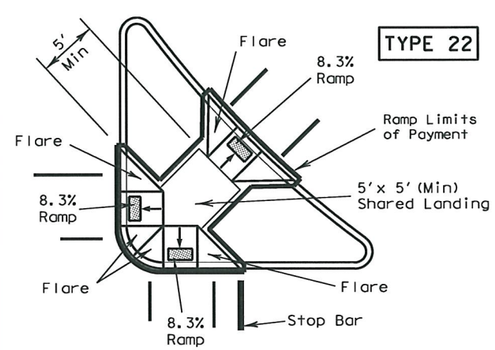

COMBINATION ISLAND RAMPS

TYPE 10

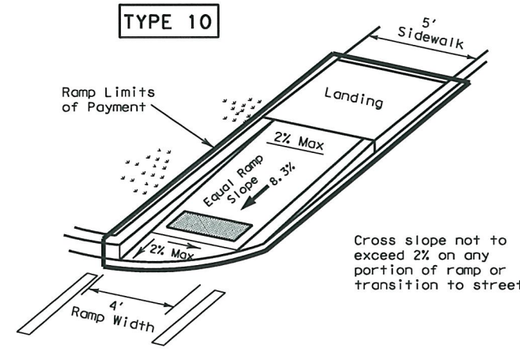

DIRECTIONAL RAMP WITHIN RADIUS
(Sidewalk adjacent to curb)

TYPE 11

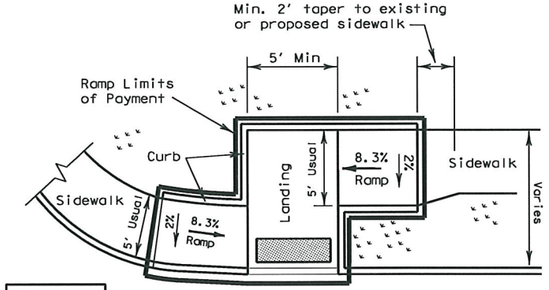

OFFSET PARALLEL CURB RAMP

NOTES:
See General Notes on sheet 2 of 4 for more information.

Denotes planting or non-walking surface.

SHEET 1 OF 4

Texas Department of Transportation
Design Division Standard

PEDESTRIAN FACILITIES
CURB RAMPS

PED-05

FILE: ped05.dgn	DN: TxDOT	CK: EH	DW: BD	CK:	
© TxDOT March 2002	CONT	SECT	JOB	HIGHWAY	
REVISIONS	0091	03	021	SH289	
	DIST	COUNTY		SHEET NO.	
	18	COLLIN		4	

P-20107-01168

DISCLAIMER:
The use of this standard is governed by the "Texas Engineering Practice Act". No warranty of any kind is made by TxDOT for any purpose whatsoever. TxDOT assumes no responsibility for the conversion of this standard to other formats or for incorrect results or damages resulting from its use.

DATE:
FILE:

DETECTABLE WARNINGS

General Notes for Detectable Warnings

1. Curb ramps must contain a detectable warning surface that consists of raised truncated domes complying with Section 4.29 of the Texas Accessibility Standards (TAS). The surface must contrast visually with adjoining surfaces, including side flares. Furnish dark brown or dark red detectable warning surface adjacent to uncolored concrete, unless specified elsewhere in the plans.
2. Detectable warning surfaces must be slip resistant and not allow water to accumulate.
3. Align truncated domes in the direction of pedestrian travel when entering the street.
4. Shaded areas on Sheet 1 of 4 indicate the approximate location for the detectable warning surface for each curb ramp type.
5. Detectable warning surfaces shall be a minimum of 24" in depth in the direction of pedestrian travel, and extend the full width of the curb ramp or landing where the pedestrian access route enters the street.
6. Detectable warning surfaces shall be located so that the edge nearest the curb line is a minimum of 6" and a maximum of 10" from the extension of the face of curb. Detectable warning surfaces may be curved along the corner radius.
7. TxDOT maintains a list of Qualified Detectable Warning Materials. Details are provided herein for the placement of landscape pavers. For other materials, refer to the manufacturer's product manual for proper installation.

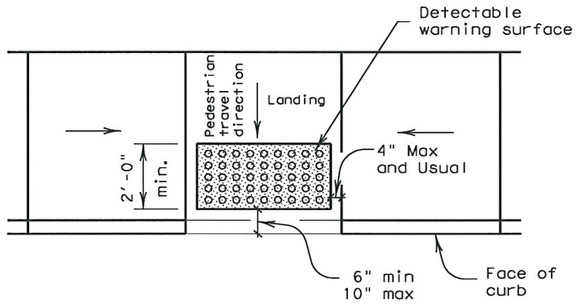

Typical placement of detectable warning surface on landing at street edge.

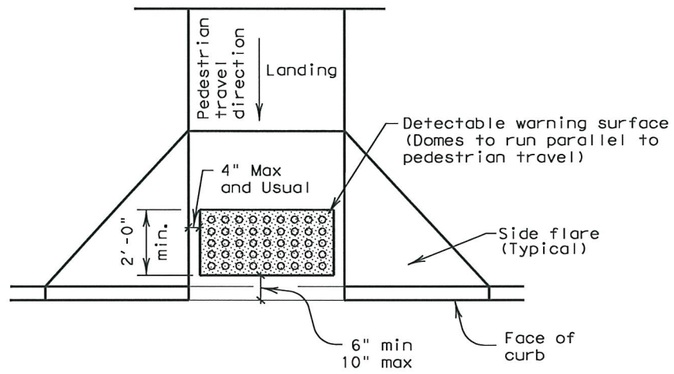

Typical placement of detectable warning surface on sloping ramp run.

Pedestrian Facilities General Notes

1. All slopes are maximum allowable. The least possible slope that will still drain properly should be used. Adjust curb ramp length or grade of approach sidewalks as directed.
2. The minimum sidewalk width is 5'. Where the sidewalk is adjacent to the back of curb, a 6' sidewalk width is encouraged. Where a 5' sidewalk can not be provided due to site constraints, a minimum 3' sidewalk with 5'x 5' passing areas at intervals not to exceed 200' is required.
3. Landings shall be 5'x 5' minimum with a maximum 2% slope in any direction.
4. Maneuvering space at the bottom of curb ramps shall be a minimum of 4'x 4' wholly contained within the crosswalk and wholly outside the parallel vehicular travel path.
5. Maximum allowable cross slope on sidewalk and curb ramp surfaces is 2%.
6. Curb ramps with returned curbs may be used only where pedestrians would not normally walk across the ramp, either because the adjacent surface is planting or other non-walking surface or because the side approach is substantially obstructed. Otherwise, provide flared sides.
7. Additional information on curb ramp location, design, light reflective value and texture may be found in the current edition of the Texas Accessibility Standards (TAS) and 16 TAC §68.102.
8. To serve as a pedestrian refuge area, the median should be a minimum of 5' wide. Medians should be designed to provide accessible passage over or through them.
9. Small channelization islands, which do not provide a minimum 5'x 5' landing at the top of curb ramps, shall be cut through level with the surface of the street.
10. Crosswalk dimensions, crosswalk markings and stop bar locations shall be as shown elsewhere in the plans. At intersections where crosswalk markings are not required, curb ramps shall be aligned with theoretical crosswalks, or as directed by the Engineer.
11. Existing features that comply with TAS may remain in place unless otherwise shown on the plans.
12. Handrails are not required on curb ramps. Provide curb ramps wherever on accessible route crosses (penetrates) a curb.
13. Curb ramps and landings shall be constructed and paid for in accordance with Item 531 "Sidewalks".
14. Separate curb ramp and landings from adjacent sidewalk and any other elements with premold or board joint of ¾" unless otherwise directed by the Engineer.
15. Provide a smooth transition where the curb ramps connect to the street.
16. Curbs shown on sheet 1 within the limits of payment are considered part of the curb ramp for payment, whether it is concrete curb, gutter, or combined curb and gutter.
17. Flare slope shall not exceed 10% measured along curb line.

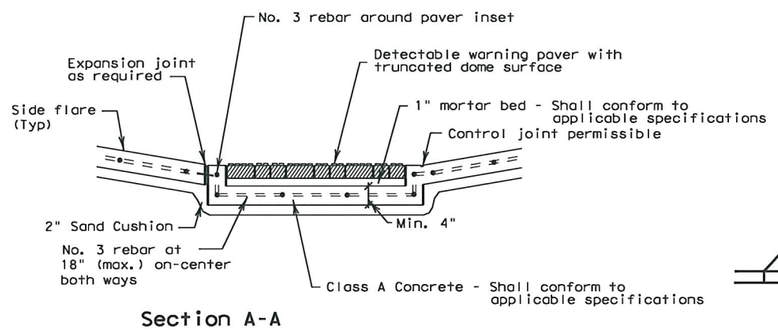

Section A-A

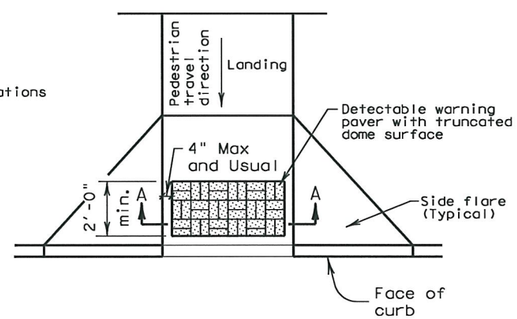

Truncated Dome Pattern Curb Ramp

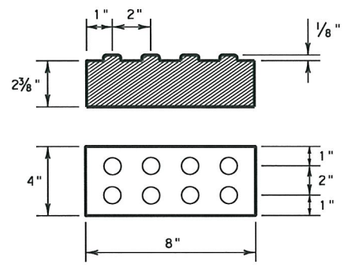

Detectable Warning Paver

General Notes (Pavers)

Furnish detectable warning paver units meeting all requirements of ASTM C-936, C-33. Lay in a two by two unit basket weave pattern or as directed.

Lay full-size units first followed by closure units consisting of at least 25 percent of a full unit. Cut detectable warning paver units using a power saw.

DETECTABLE WARNING PAVER (OPTION)

Texas Department of Transportation
Design Division Standard

PEDESTRIAN FACILITIES

GENERAL NOTES
AND
DETECTABLE WARNINGS

PED-05

FILE: ped05.dgn	DN: TxDOT	CK: EH	DW: BD	CK:		
©TxDOT March 2002	CONT	SECT	JOB		HIGHWAY	
REVISIONS	0091	03	021		SH289	
	DIST	COUNTY			SHEET NO.	
	18	ELLIS			P-20107-01169	

DISCLAIMER:
The use of this standard is governed by the "Texas Engineering Practice Act". No warranty of any kind is made by TxDOT for any purpose whatsoever. TxDOT assumes no responsibility for the conversion of this standard to other formats or for incorrect results or damages resulting from its use.

DATE:
FILE:

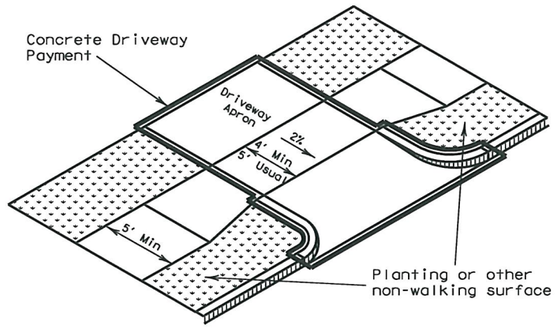

Setback sidewalk

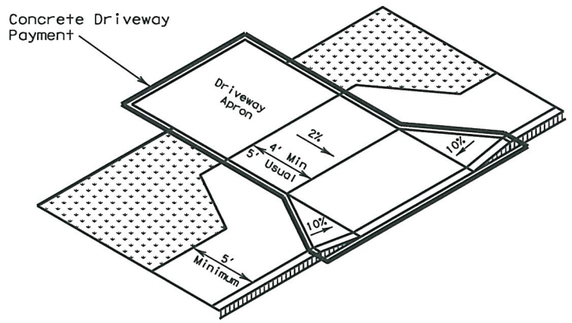

Apron offset sidewalk

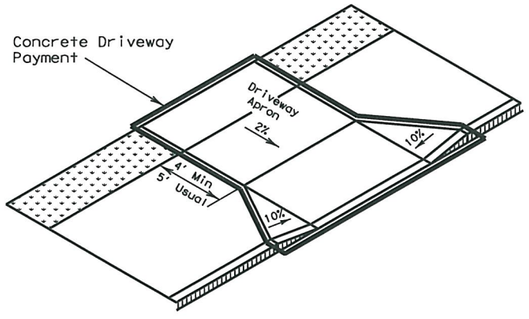

Wide sidewalk

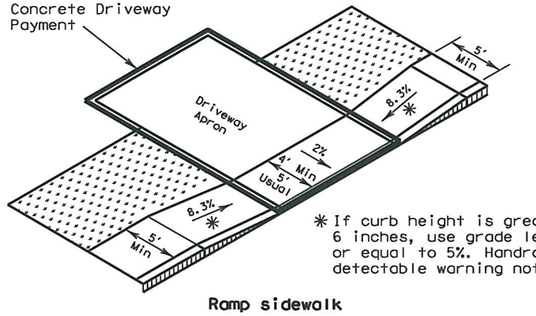

* If curb height is greater than 6 inches, use grade less than or equal to 5%. Handrail and detectable warning not required.

Ramp sidewalk

SIDEWALK TREATMENT AT DRIVEWAYS

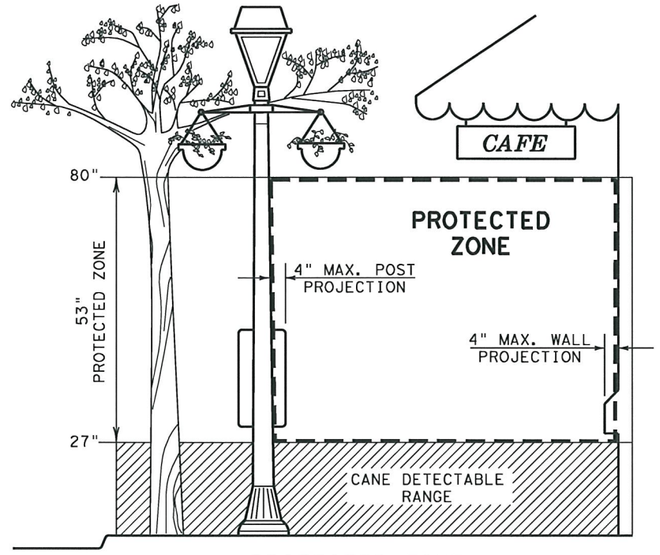

PROTECTED ZONE

In pedestrian circulation area, maximum 4" projection for post or wall mounted objects between 27"and 80" above the surface.

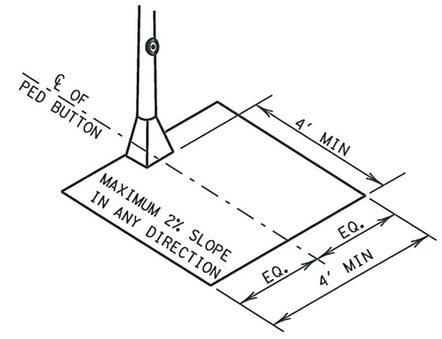

CLEAR GROUND SPACE CENTERED AT PEDESTRIAN PUSH BUTTON

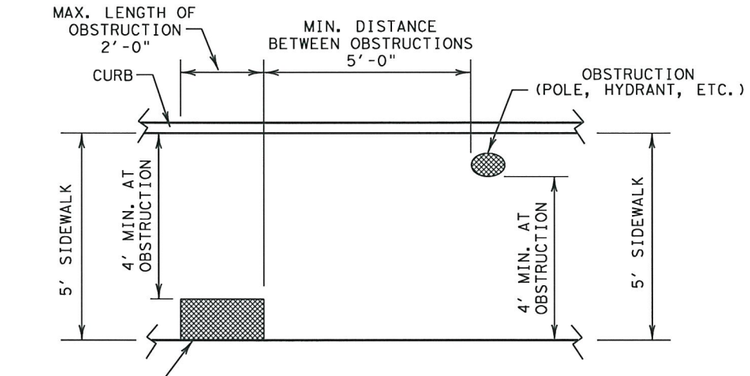

PLAN VIEW

PLACEMENT OF STREET FIXTURES

(ITEMS NOT INTENDED FOR PUBLIC USE. MINIMUM 4' x 4' CLEAR GROUND SPACE REQUIRED AT PUBLIC USE FIXTURES.)

General Notes

1. All slopes are maximum allowable. The least possible slope that will still drain properly should be used.
2. Place traffic signal or illumination poles, ground boxes, controller boxes, signs, drainage facilities and other items so as not to obstruct the accessible route or clear ground space.
3. Usual sidewalk cross slope equals 1.5%. The maximum allowable sidewalk cross slope equals 2%.
4. Street grades and cross slopes shall be as shown elsewhere in the plans.
5. Existing features that comply with TAS may remain in place unless otherwise shown on the plans.
6. Changes in level greater than ¼ inch are not permitted.
7. The least possible grade should be used to maximize accessibility. The running slope of sidewalks and crosswalks, within the public right of way, may follow the grade of the parallel roadway. Where a continuous grade greater than 5% must be provided, handrails may be desirable on one or both sides of the sidewalk to improve accessibility. Handrails may also be needed to protect pedestrians from potentially hazardous conditions. If provided, handrails must comply with TAS 4.8.5.
8. Handrail extensions shall not protrude into the usable landing area or into intersecting pedestrian routes.
9. Driveways and turnouts shall be constructed and paid for in accordance with Item, "Driveways and Turnouts". Sidewalks shall be constructed and paid for in accordance with Item, "Sidewalks".
10. Sidewalk details are shown elsewhere in the plans.

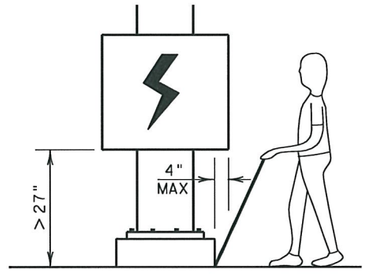

When an obstruction of a height greater than 27" from the surface would create a protrusion of more than 4" into the pedestrian circulation area, construct additional curb or foundation at the bottom to provide a maximum 4" overhang.

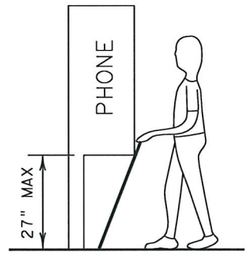

Protruding objects of a height ≤ 27" are detectable by cane and do not require additional treatment.

DETECTION BARRIER FOR VERTICAL CLEARANCE < 80"

Texas Department of Transportation
Design Division Standard

PEDESTRIAN FACILITIES
SIDEWALKS

PED-05

FILE: ped05.dgn	DN: TxDOT	CK: EH	DW: BD	CK:
©TxDOT March 2002	CONT	SECT	JOB	HIGHWAY
REVISIONS	0091	03	021	SH289
	DIST	COUNTY		SHEET NO.
	18	ALL		24

P-201107-01170

DISCLAIMER:
The use of this standard is governed by the "Texas Engineering Practice Act". No warranty of any kind is made by TxDOT for any purpose whatsoever. TxDOT assumes no responsibility for the conversion of this standard to other formats or for incorrect results or damages resulting from its use.

DATE:
FILE:

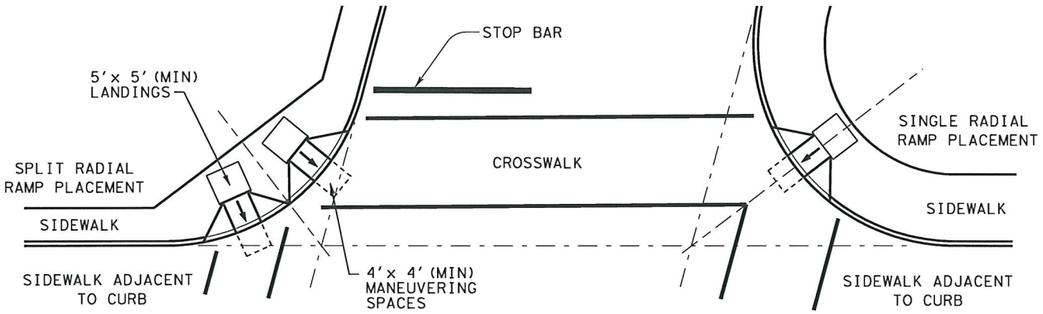

SKEWED INTERSECTION WITH "LARGE" RADIUS

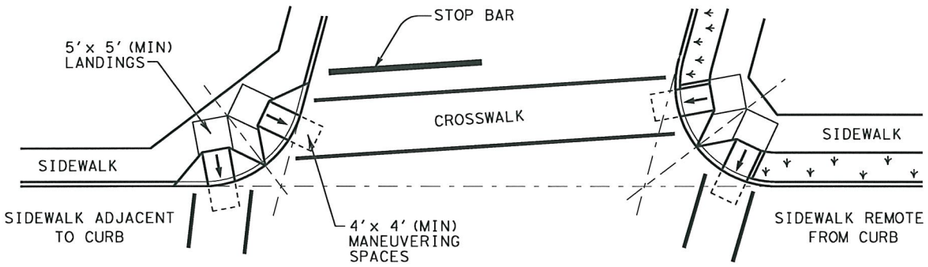

SKEWED INTERSECTION WITH "SMALL" RADIUS

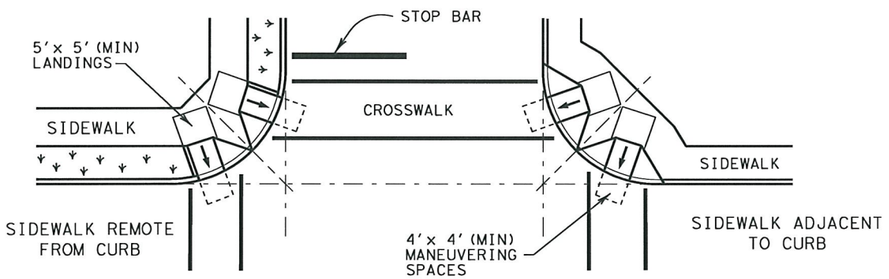

NORMAL INTERSECTION WITH "SMALL" RADIUS

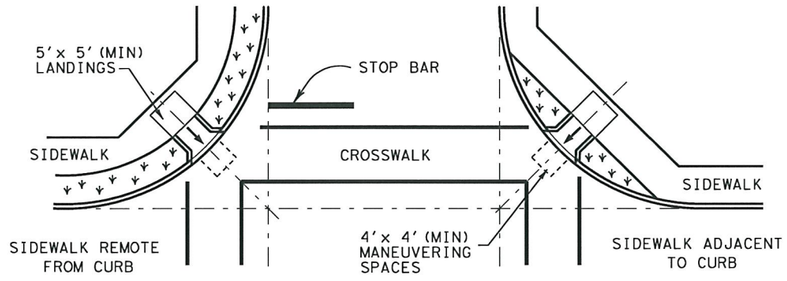

NORMAL INTERSECTION WITH "LARGE" RADIUS

General Notes

1. Street grades and cross slopes shall be as shown elsewhere in the plans.
2. Ramps are shown here without detectable warnings for simplicity. Detectable warnings are required at the locations shown on the PED Standard (Sheets 1 and 2 of 4) and in accordance with the details shown below.
3. Small channelization islands, which can not provide a minimum 5' x 5' landing at the top of ramps, shall be cut through level with the surface of the street.

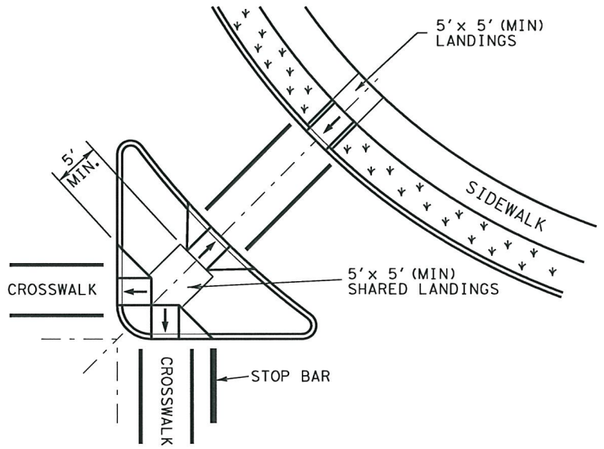

AT INTERSECTION
W/FREE RIGHT TURN & ISLAND

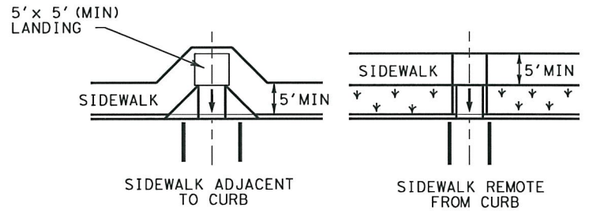

MID-BLOCK PLACEMENT
PERPENDICULAR RAMPS

TYPICAL CROSSING LAYOUTS

SEE SHEET 1 OF 4 FOR DETAILS AND DIMENSIONS

Texas Department of Transportation
Design Division Standard

PEDESTRIAN FACILITIES

INTERSECTION LAYOUTS

PED-05

FILE: ped05.dgn	DN: TxDOT	CK: EH	DW: BD	CK:	
©TxDOT March 2002	CONT	SECT	JOB	HIGHWAY	
REVISIONS	0091	03	021	SH289	
	DIST	COUNTY		SHEET NO.	
	18	COLLIN		P-201107-01171	

DISCLAIMER:
The use of this standard is governed by the "Texas Engineering Practice Act". No warranty is made by TxDOT for any purpose whatsoever. TxDOT assumes no responsibility for errors or omissions resulting from the conversion of this standard to other formats or for incorrect results or damages resulting from its use.

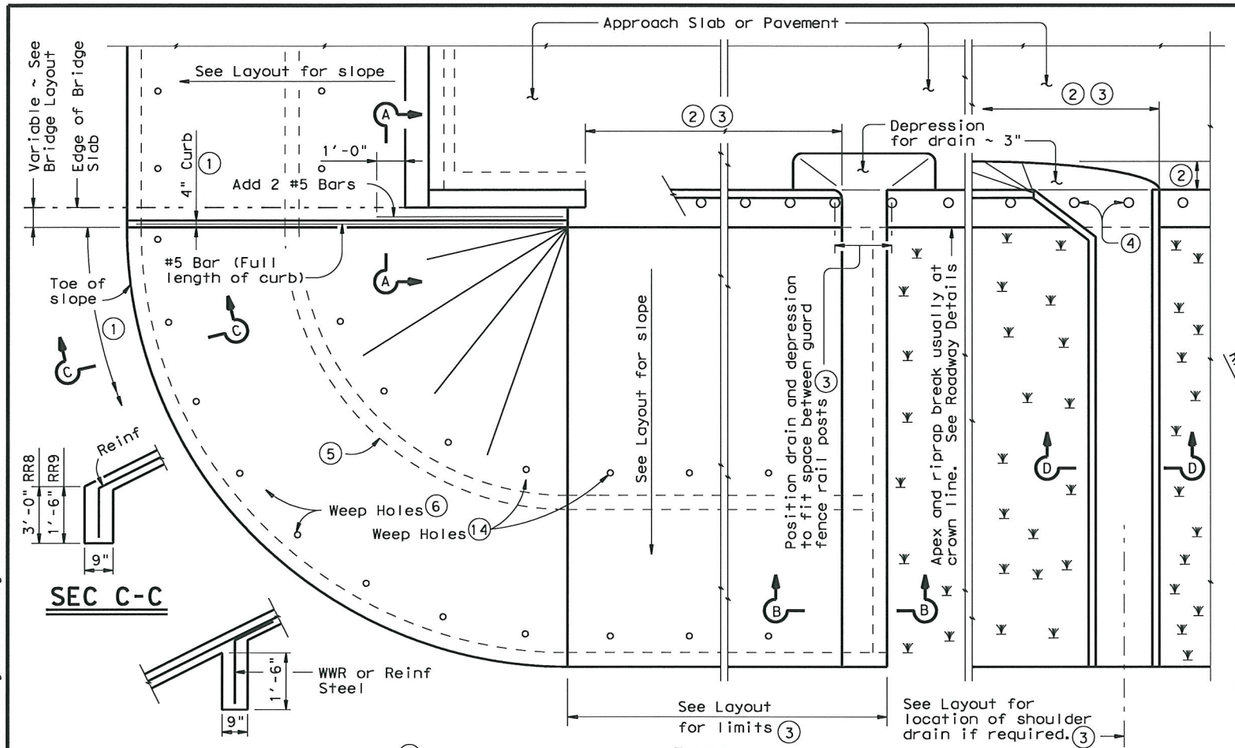

PLAN

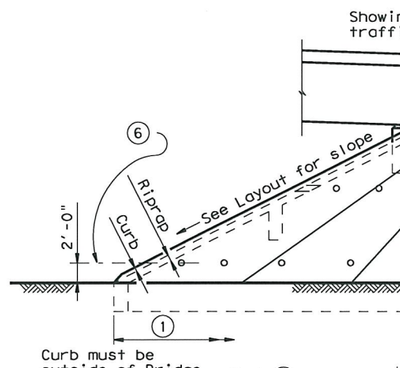

SEC C-C

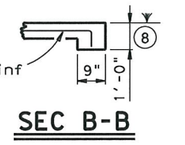

INTERMEDIATE TOEWALL (5)

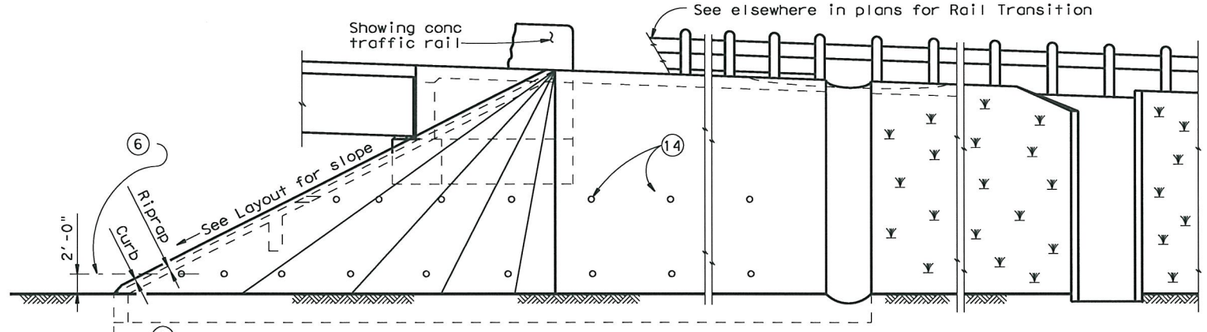

ELEVATION

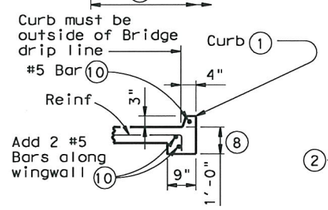

SEC A-A

SEC B-B

(No Drain)

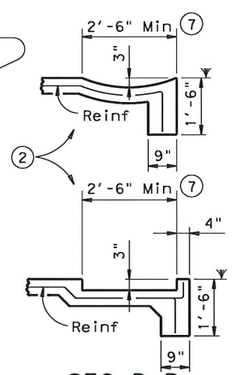

SEC B-B

(Shoulder Drain integral with riprap)

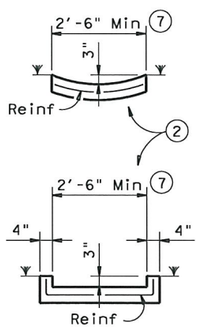

SEC D-D

(Shoulder Drain)

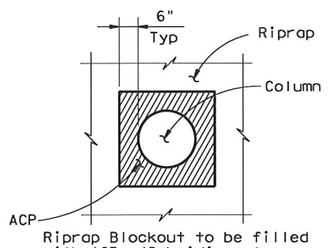

Riprap Blockout to be filled with ACP. (Subsidiary to Riprap)

RIPRAP DETAIL AT COLUMNS

(As directed by the Engineer)

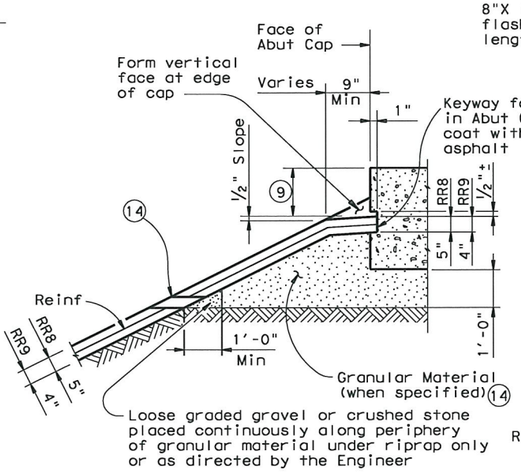

SHOWING KEYWAY OPTION

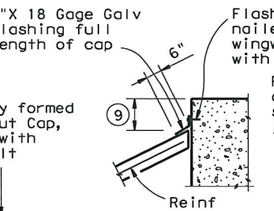

CAP OPTION A

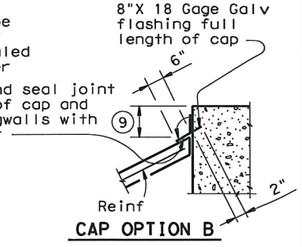

CAP OPTION B

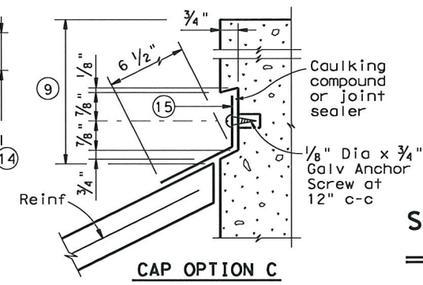

CAP OPTION C

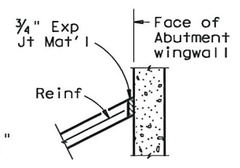

SECT THRU RIPRAP AT WINGWALL (12)

SECTIONS THRU RIPRAP AT CAP (11)

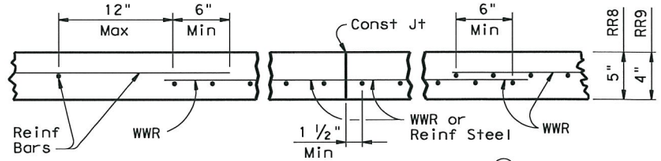

REINFORCEMENT DETAILS (13)

See General Notes for optional sythetic fiber reinforcement.

GENERAL NOTES:

Concrete shall be Class "B" with a minimum compressive strength of 2,000 psi unless noted elsewhere in plans.

All reinforcing steel shall be Grade 60.

Synthetic fibers listed on the "Fibers for Concrete" Material Producer List (MPL) may be used in lieu of steel reinforcing in riprap concrete unless noted otherwise.

Construction joints or grooved joints extending the full slant slope height shall be at intervals of approximately 20 feet unless otherwise directed by the Engineer.

Hardware cloth, loose graded stone behind weep holes, flashing, or other sealing material shall not be paid for directly but shall be subsidiary to the bid item "Riprap".

Unless specified elsewhere in the plans to be only reinforcing bars, the riprap reinforcing may be composed of reinforcing bars, Welded Wire Reinforcement (WWR), or any suitable combination of both types.

See Layout for limits of riprap.

RR8 is to be used on stream crossings.

RR9 is to be used on other embankments.

(1) When riprap is shown extended around header on layout, extend slab and toewall as shown and eliminate 4" curb.

(2) Limits and configuration of drains and depressions shall be as shown elsewhere in plans or as directed by the Engineer.

(3) Location of shoulder drain must consider limitations imposed by rail transition. Do not locate shoulder drains at expansion joints between approach slab and concrete pavement.

(4) See details elsewhere in plans for installation of guard fence posts through concrete riprap.

(5) Provide Intermediate toewall only when designated elsewhere in the plans or included in the specifications.

(6) Provide lower level of 2" Dia weep holes at 10' c-c backed by 1 CF packet of gravel and galvanized hardware cloth at all locations unless directed by the Engineer to eliminate.

(7) Wider or other drain configurations shall be used if shown elsewhere in plans or if directed by the Engineer.

(8) Wall extension may be reduced or modified if approved by the Engineer. Wall extension shall be increased to 1'-6" whenever the optional intermediate toewall is called for in the plans.

(9) Top of cap to top of riprap dimension varies as directed by the Engineer. Should be 9" Min for beam/slab type bridges and 1'-6" for slab span, box beam, or slab beam bridges.

(10) #5 bars shown are required even when synthetic fiber reinforcing option is selected.

(11) The sealing option of the joint between the face of cap and riprap shall be as designated by the Engineer or as shown elsewhere on plans.

(12) Flashing (shown in Cap Option A) may be used at wingwall in addition to Exp Jt Mat'l if shown on plans or directed by the Engineer.

(13) Reinforcing bars shall be #3 at 18" Spa c-c. Welded Wire Reinforcement (WWR) shall be 6X6-W2.9XW2.9. Combinations of WWR and reinforcing bars may be used if both are permitted. Lap splices shall be a minimum of 6 inches, measured from the transverse wire of WWR, and the ends of reinforcing bars.

(14) If granular material is specified, provide upper level of 2" Dia weep holes at 10' c-c backed by galvanized hardware cloth.

(15) 8" x 18 Gage Galv Sheet Metal

FOR CONTRACTOR'S INFORMATION ONLY:
5" of RR8 = 0.015 CY/SF
4" of RR9 = 0.012 CY/SF
#3 Reinf at 18" c-c = 0.501 Lbs/SF
6X6-W2.9XW2.9 = 0.394 Lbs/SF

Texas Department of Transportation
Bridge Division

CONCRETE RIPRAP AND SHOULDER DRAINS
EMBANKMENTS AT BRIDGE ENDS (TYPES RR8 & RR9)

CRR

FILE: crrstdel.dgn	DN: TxDOT	CK: TxDOT	DW: TxDOT		CK: TxDOT
©TxDOT April 2006	DISTRICT	STATE PROJECT NUMBER			SHEET
REVISIONS 08-07: Revised Note 6, removed "H" reference, added Note 14 & changed weep hole size & spacing. 04-11: Added fiber reinforcement.	18	SEE THE TITLE SHEET			172
	COUNTY		CONTROL	SECT	JOB	HIGHWAY
	COLLIN		0918	76	021	SH289

P-20180702

PATH:
LEVELS DI... ED
1

DISCLAIMER:
The use of this standard is governed by the "Texas Engineering Practice Act". No warranty of any kind is made by TxDOT for any purpose whatsoever. TxDOT assumes no responsibility for the conversion of this standard to other formats or for incorrect results or damages resulting from its use.

DATE:
FILE:

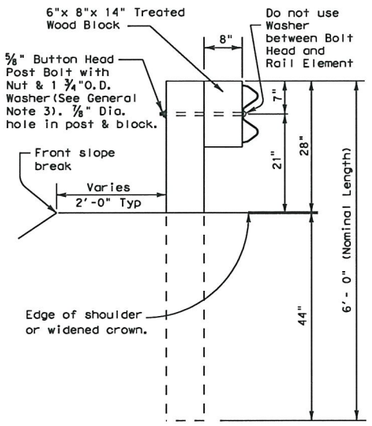

TYPICAL POST

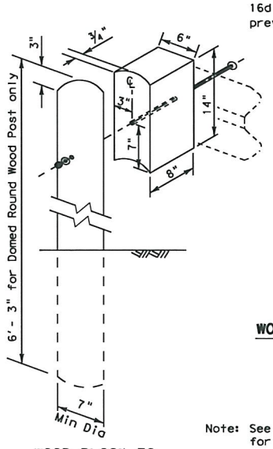

WOOD BLOCK TO ROUND WOOD POST

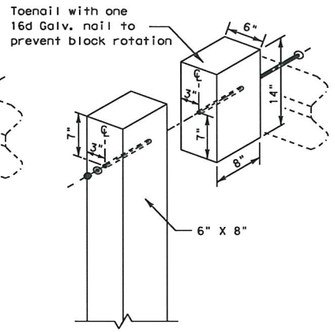

WOOD BLOCK TO RECTANGULAR WOOD POST

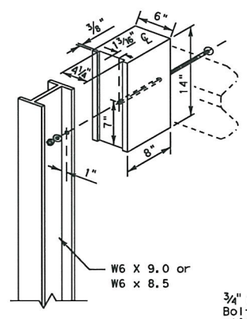

WOOD BLOCK TO STEEL POST

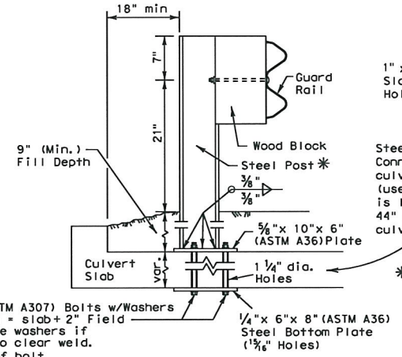

* Post(s) may require field modifications to ensure proper guardrail height.

*** LOW FILL CULVERT POST**

FOR USE ON NON-BRIDGE CLASS CULVERTS ONLY

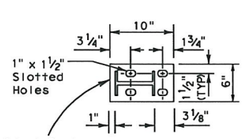

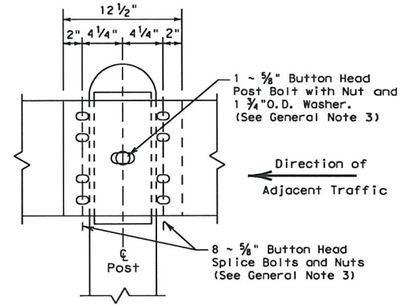

RAIL SPLICE DETAIL

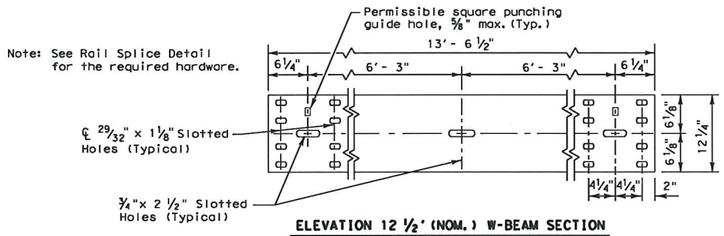

ELEVATION 12 1/2' (NOM.) W-BEAM SECTION

25 foot sections may also be supplied (See General Note 2)

GENERAL NOTES

1. The type of post (round wood post, rectangular wood post, or steel post) will be shown elsewhere in the plans. The exact position of MBGF shall be shown elsewhere in the plans or as directed by the Engineer. Steel posts to be galvanized in accordance with Item 445, "Galvanizing."
2. Rail element shall meet the requirements of Item 540, "Metal Beam Guard Fence" except as modified on the plans. The Contractor may furnish rail elements of 12 1/2 or 25 foot nominal lengths.
3. Button head "post" bolts (ASTM A307) shall be of sufficient length to extend through the full thickness of the nut (ASTM A563) and Type A (1 3/4" O.D.) washer and not more than 1" beyond it. Button head "splice" bolts (ASTM A307) are 5/8" x 1 1/4" (or 2" long at triple rail splices) with a 5/8" double recessed nut (ASTM A563).
4. Fittings (bolts, nuts, and washers) shall be galvanized in accordance with Item 445, "Galvanizing." Fittings shall be subsidiary to the bid item.
5. Crown shall be widened to accommodate the Metal Beam Guard Fence.
6. The lateral approach to the guard fence, shall have a slope rate of not more than 1V:10H.
7. Unless otherwise shown in the plans, guard fence placed in the vicinity of curbs shall be positioned so that the face of curb is located directly below or behind the face of the block. Rail placed over curbs shall be installed so that the post bolt is located approximately 21 inches above the gutter pan or roadway surface.
8. If solid rock is encountered within 0 to 18" of the finished grade, drill a 22" dia. hole, 24" into the rock, or drill two 12" dia. front to back overlapping holes, 24" into the rock. If solid rock is encountered below 18", drill a 12" dia. hole, 12" into the rock or to the standard embedment depth, whichever is less. Any excess post length, after meeting these depths, may be field cut to ensure proper guardrail mounting height. Backfill with a cohesionless material.
9. Posts shall not be set in concrete, of any depth.
10. Special fabrication will be required at installations having a curvature of less than 150 ft. radius.
11. The terminal anchor section (TAS) post shall be set in Class A concrete (unless otherwise shown in the plans) in accordance with Item 421, "Hydraulic Cement Concrete." Concrete shall be subsidiary to the bid item requiring construction of the terminal anchor section (TAS). Terminal anchor post to be galvanized in accordance with Item 445, "Galvanizing."
12. Unless otherwise shown in the plans, a composite material post and/or block that meets the requirements of DMS-7210, "Composite Material Posts and Blocks for Metal Beam Guard Fence" may be substituted for posts and/or blocks of similar dimensions. The Construction Division, TxDOT maintains a Material Producer List (MPL) for producers of materials conforming to DMS-7210. Only producers on the MPL can furnish composite material posts and/or blocks.

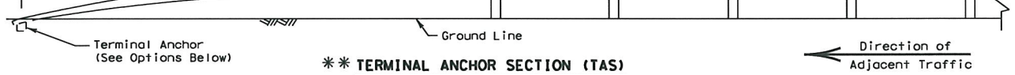

**** TERMINAL ANCHOR SECTION (TAS)**

Terminal anchor sections are only for downstream use, when located outside the horizontal clearance area of opposing traffic.

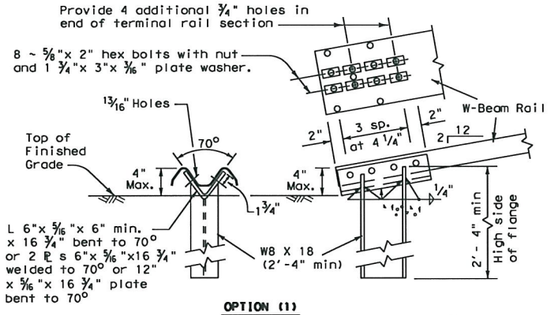

OPTION (1)

Note: This anchor post requires four additional 3/4" holes (shop or field) in the rail member with eight 5/8" hex bolts with nut and plate washer.

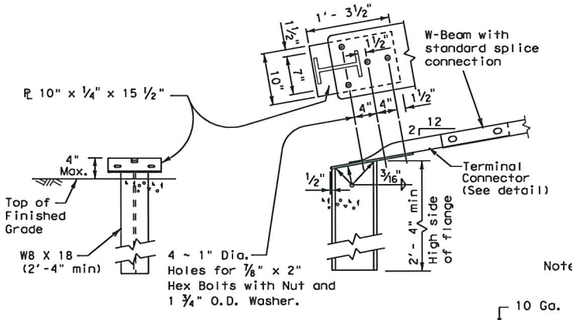

OPTION (2)

Note: This anchor post requires the use of the 10 ga. terminal connector with four 7/8" hex bolts with nut and washer.

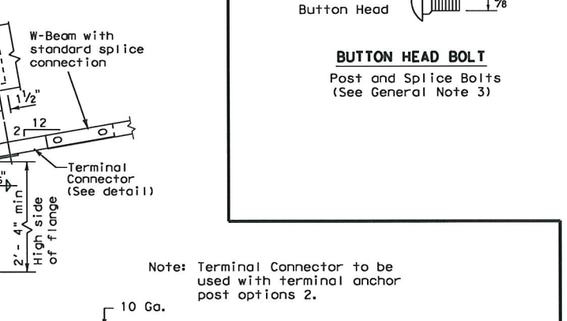

BUTTON HEAD BOLT

Post and Splice Bolts (See General Note 3)

TERMINAL ANCHOR POST OPTIONS

(See General Note 11)

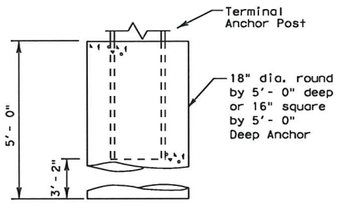

Notes:

Either concrete anchor may be used with either post option above.

No construction joint is allowed in the concrete anchor.

Terminal rail may be bolted to post and in twist position prior to placing concrete anchor.

If concrete anchor is precast, the area should be compacted as directed by the Engineer, when placed in the field.

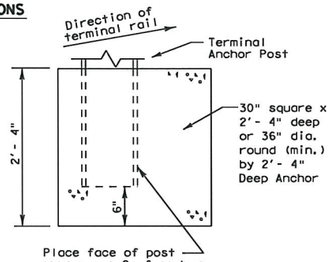

TERMINAL CONCRETE ANCHOR OPTIONS

(See General Note 11)

Note: Terminal Connector to be used with terminal anchor post options 2.

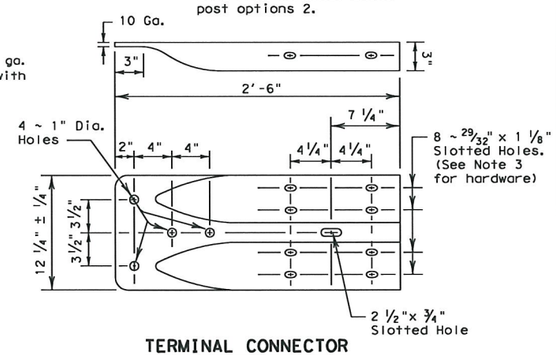

TERMINAL CONNECTOR

For connection hardware to concrete rails, see the MBGF transition standards.

Texas Department of Transportation
Design Division Standard

METAL BEAM GUARD FENCE

MBGF-09

FILE: mbgf09.dgn	DN: TxDOT	CK: AM	DW: BD	CK:
© TxDOT July 1994	CONT	SECT	JOB	HIGHWAY
REVISIONS	0091	03	021	SH 289
	DIST	COUNTY		SHEET NO.
	6			174

P-20107-01

DISCLAIMER:
The use of this standard is governed by the "Texas Engineering Practice Act". No warranty of any kind is made by TxDOT for any purpose whatsoever. TxDOT assumes no responsibility for the conversion of this standard to other formats or for incorrect results or damages resulting from its use.

DATE:
FILE:

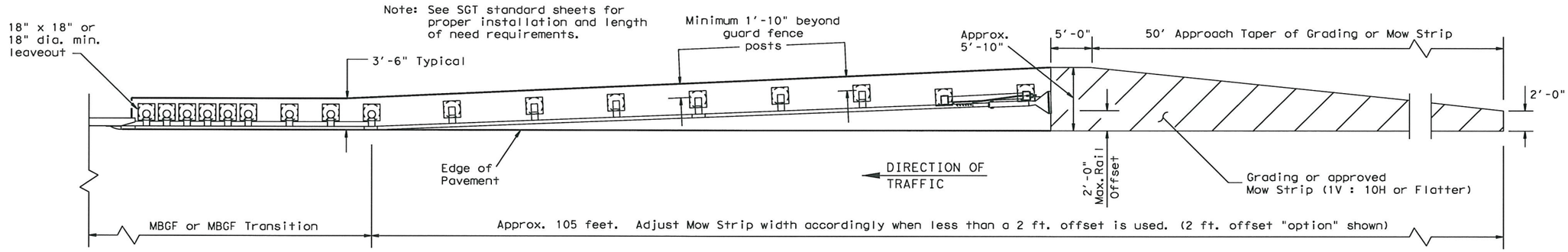

GRADING AND MOW STRIP AT GUARDRAIL END TREATMENTS

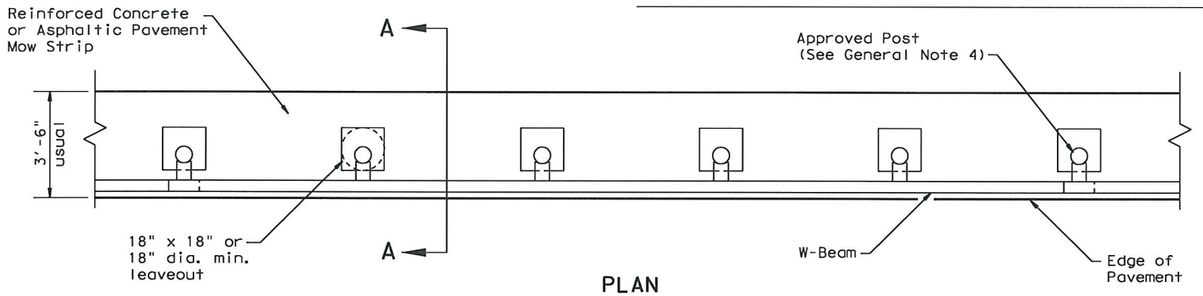

PLAN

Regular MBGF shown with Mow Strip

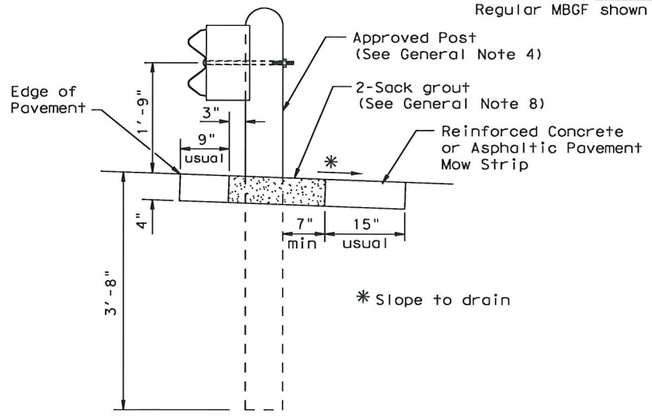

SECTION A-A

Typical

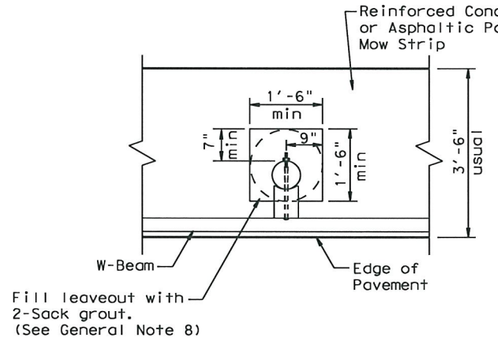

MOW STRIP DETAIL

Reinforced Concrete or Asphaltic Pavement Mow Strip with 18" x 18" or 18" dia. minimum leaveout.

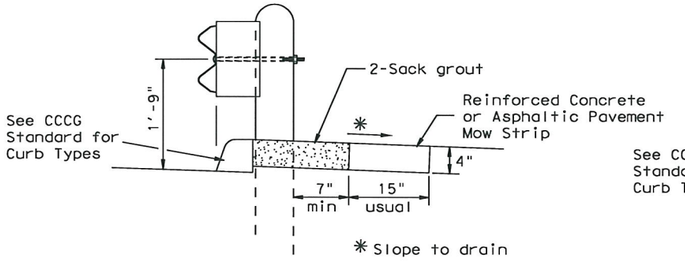

CURB OPTION (1)

This option will increase the post embedment through out the system.

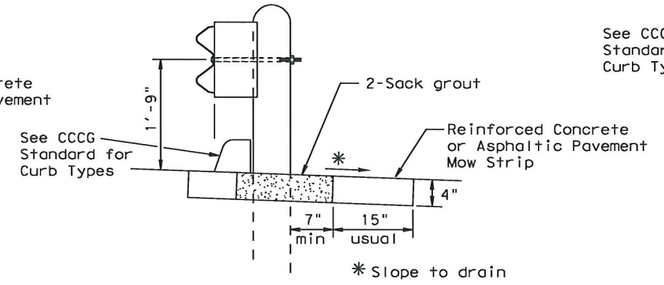

CURB OPTION (2)

Curb shown on top of mow strip

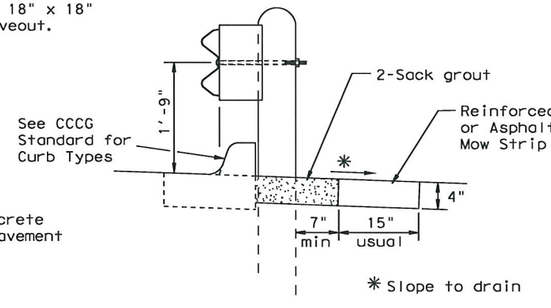

CURB OPTION (3)

Note: Site Condition(s)

Site conditions may exist where grading is required for the proper installation of metal guard fence and end treatments.

Approach grading or mow strip may be decreased or eliminated. As directed by the Engineer.

GENERAL NOTES

1. This mow strip design is for use with metal beam guard fence, guard fence transitions, and guard fence end treatments (See SGT standards for proper SGT installation).
2. Mow strips shall be asphaltic pavement or reinforced concrete (wire mesh or synthetic fiber), as shown on the plans and will be paid for under the pertinent bid item of work. Asphaltic pavement shall meet the requirements of the item, and be placed in accordance with the pertinent bid item as shown on the plans. Reinforced concrete shall be placed in accordance with Item 432, "Riprap." The use of the synthetic fiber in lieu of steel reinforcing is acceptable, provided the fiber producer is on the Department Material Producer List (MPL), maintained by TxDOT, Construction Division.
3. The leaveout behind the post shall be a minimum of 7".
4. The type of approved post will be shown elsewhere in the plans. See the applicable standard sheets for additional details and information.
5. Other curb placement options may be used. Curbs are not considered part of the mow strip and will be paid for under other pertinent bid item.
6. Depth of mow strip will be 4".
7. The limits of payment for asphaltic pavement or reinforced concrete will include leaveouts for post.
8. The leaveouts shall be filled with no more than a 2-sack grout mixture and placed in accordance with Section 421.2.F, "Mortar and Grout." Payment for furnishing and placing the grout mixture will be considered subsidiary to the pay item of asphaltic pavement or reinforced concrete.

Texas Department of Transportation
Design Division Standard

METAL BEAM GUARD FENCE

(MOW STRIP)

MBGF (MS) - 10

FILE: mbgfms10.dgn	DN: TxDOT	CK:	DW:	CK:
© TxDOT April 2003	CONT	SECT	JOB	HIGHWAY
REVISIONS	0091	03	021	SH 289
	DIST	COUNTY		SHEET NO.
	18	ELLIS		175

P-201107-01

DISCLAIMER:
The use of this standard is governed by the "Texas Engineering Practice Act". No warranty of any kind is made by TxDOT for any purpose whatsoever. TxDOT assumes no responsibility for the conversion of this standard to other formats or for incorrect results or damages resulting from its use.

DATE:
FILE:

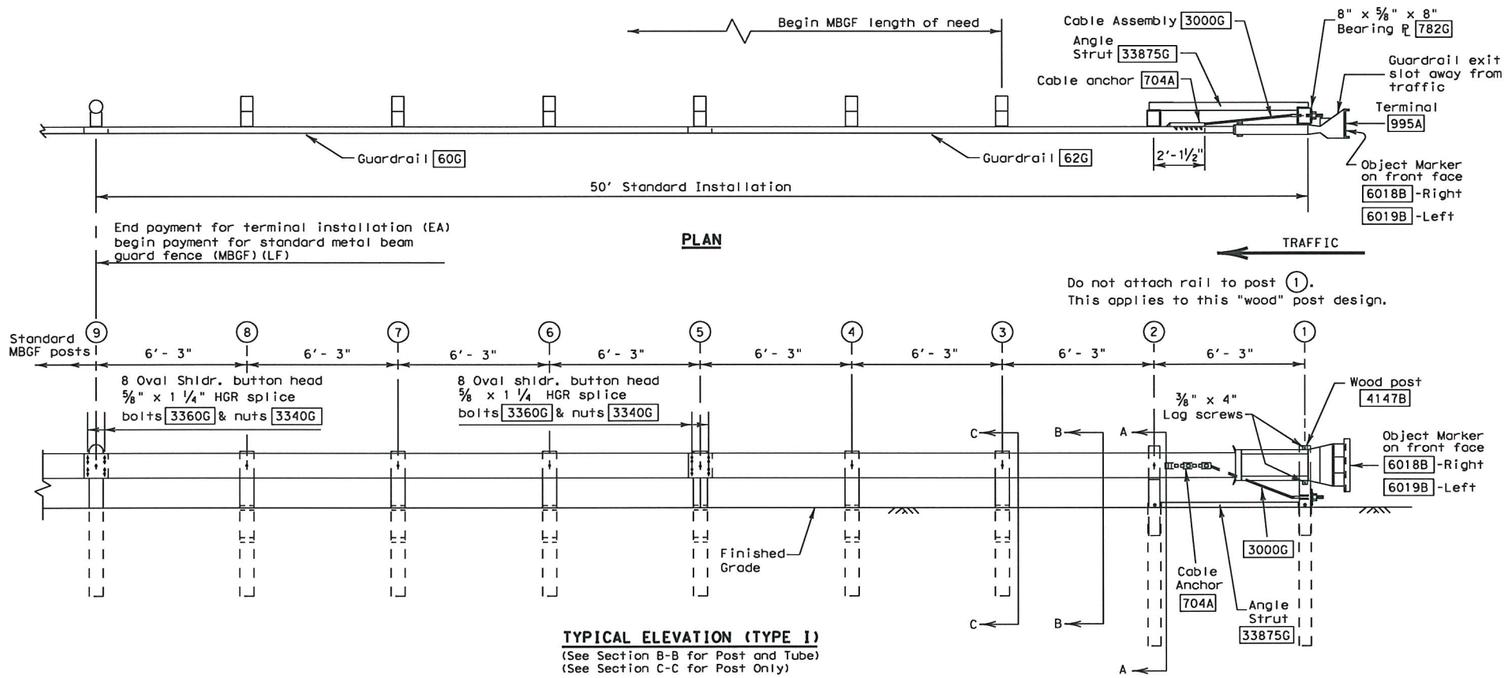

PLAN

TYPICAL ELEVATION (TYPE I)
(See Section B-B for Post and Tube)
(See Section C-C for Post Only)

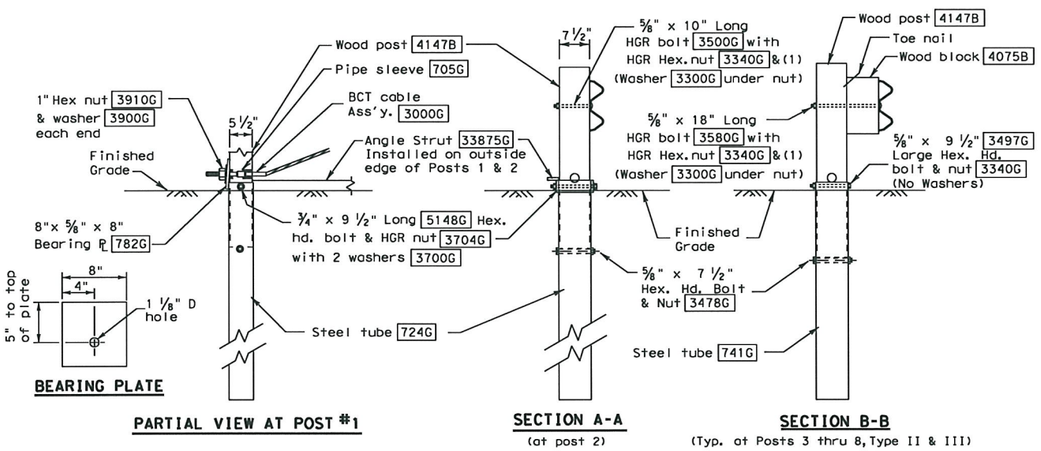

BEARING PLATE

PARTIAL VIEW AT POST #1

SECTION A-A
(at post 2)

SECTION B-B
(Typ. at Posts 3 thru 8, Type II & III)

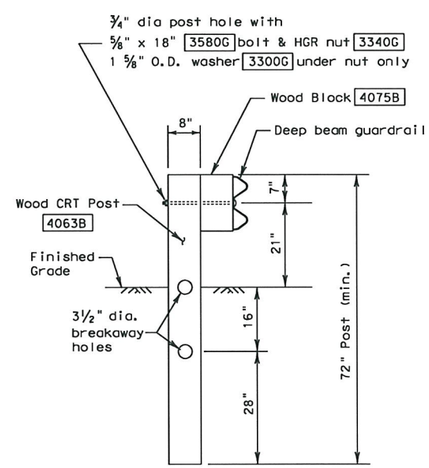

SECTION C-C
(Typ. at post only positions)

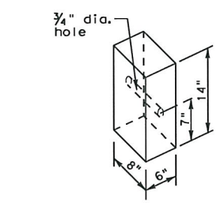

WOOD BLOCK
4075B

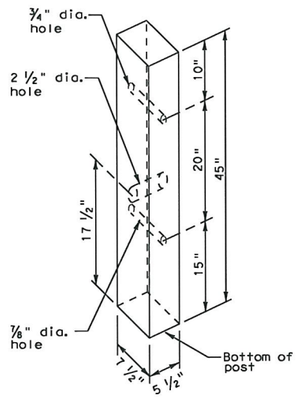

All measurements should be taken from bottom of posts.

WOOD POST
4147B

POST & TUBE OPTIONS			
Type I	Posts	①	thru ②
Type II	Posts	①	thru ④
Type III	Posts	①	thru ⑧

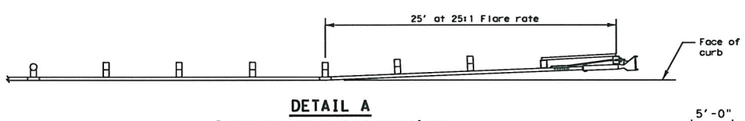

DETAIL A
Placement at curbed locations
(See General Note 4)

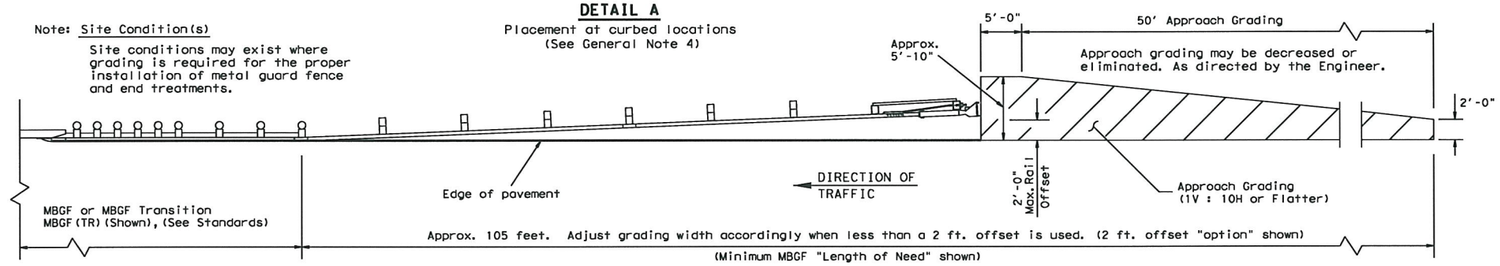

GRADING AT GUARDRAIL END TREATMENTS

GENERAL NOTES

1. The Type of SGT unit will be specified elsewhere in the plans. Numbers in circles indicate post position. The Type of SGT unit chosen is a maintenance consideration and does not affect the systems performance.

Post & Tube Options		Post Only
Type I	Posts ① thru ②	Posts ③ thru ⑧
Type II	Posts ① thru ④	Posts ⑤ thru ⑧
Type III	Posts ① thru ⑧	None

2. SGT's placed within the "minimum" 150 ft. radius, shall be installed straight. Standard rail elements may be installed within the radius, without special fabrication.
3. All bolts, nuts, cable assemblies, cable anchors, steel tubes & bearing plates shall be galvanized.
4. At non-curbed locations, a flare rate of 25:1 may be used over the first 50 ft. of the system to prevent the terminal head from encroaching on the shoulder. The flare may be decreased or eliminated for specific installations, if directed by the Engineer.
   At curbed locations, a flare rate of 25:1 shall be used beginning at post number 5 and ending at post number 1.
5. The steel tubes shall not protrude more than 4 inches above ground. Site grading may be necessary to meet this requirement.
6. The steel tubes may be driven with an approved driving head. They shall not be driven with the wood post in the tube. If the steel tubes are placed in drilled holes, the backfill material must be satisfactorily compacted to prevent tube settlement.
7. If solid rock is encountered. See the manufacturer's installation manual for the proper installation guidance.
8. The breakaway cable assembly must be taut. A locking device, (vice grips or channel lock pliers) should be used to prevent the cable from twisting when tightening the nuts.
9. The wood blocks shall be "toe nailed" to the rectangular wood posts to prevent them from turning when the wood shrinks.
10. For curb installations, the soil tubes and posts shall be installed at the proper ground elevation behind the curb. The posts will then require field drilling new holes to accommodate the rail to post connection bolt to maintain the proper height of the rail above the gutter pan. The excess post length above the rail will be removed if directed by the Engineer.
11. An object marker shall be installed on the front of the impact head as detailed on D&OM(VIA).
12. A special site evaluation should be considered, prior to using this end treatment where there is less than 25 feet between the extrusion side of the end treatment and any adjacent driving lane.

BILL OF MATERIAL

Code #	POST & TUBE OPTIONS Type I Qty.	Type II Qty.	Type III Qty.	DESCRIPTION
62G	1	1	1	#1 Deep Beam Guardrail (12 Ga) at 25'
60G	1	1	1	#2 Deep Beam Guardrail (12 Ga) at 25'
724G	2	2	2	Steel Tube - 6"x 8"x 72"x 1/8" min
741G	0	2	6	Steel Tube - 6" x 8" x 54" x 1/8" min
4147B	2	4	8	Wood Posts - 5 1/2" x 7 1/2" x 45"
4063B	6	4	0	Wood CRT Posts - 6"x 8"x 72"
4075B	6	6	6	Wood Block - 6"x 8"x 14"
705G	1	1	1	Pipe Sleeve - 2" std. pipe x 5 1/2"
782G	1	1	1	Bearing Plate - 8"x 8"x 5/8"
704A	1	1	1	Cable Anchor
3000G	1	1	1	Cable Assembly (3/4" x 78")
33875G	1	1	1	Angle Strut
995A	1	1	1	ET-2000 Plus Guardrail Terminal
				HARDWARE
5148G	2	2	2	3/4" x 9 1/2" Hex Hd (Top of tubes 1&2) A325
3300G	7	7	7	5/8" Washers
3478G	2	4	8	5/8" x 7 1/2" Hex Bolt
3500G	1	1	1	5/8" x 10" Post Bolt (Post 2 of LET)
3580G	6	6	6	5/8" x 18" HGR Post Bolt (posts ③ thru ⑧)
3360G	16	16	16	5/8" x 1 1/4" HGR Splice Bolt
3340G	25	27	31	5/8" HGR Nut (16-spl, 7-posts)
4228G	2	2	2	3/8" x 4" Lag Screw
3910G	2	2	2	1" Hex Nut (Anchor Cable)
3900G	2	2	2	1" Washer (Anchor Cable)
6018B	1	1	1	Right - Object Marker
6019B	1	1	1	Left - Object Marker
3700G	4	4	4	3/4" Washer
3704G	2	2	2	3/4" Heavy Hex Nut
3497G	0	2	6	5/8" x 9 1/2" Hex Hd (Top of Tubes 3-8) A307

Texas Department of Transportation
Design Division Standard

SINGLE GUARDRAIL TERMINAL
(ET-2000 PLUS)
(WOOD POST)

SGT(7)-10

FILE: sgt710.dgn	DN: TxDOT	CK: AM	DW: BD	CK:
©TxDOT April 1997 REVISIONS	CONT	SECT	JOB	HIGHWAY
	0091	03	021	SH 289
	DIST	COUNTY		SHEET NO.
	18			176

P-2001107-01

TXDOT
1000.0000 ft / IN.

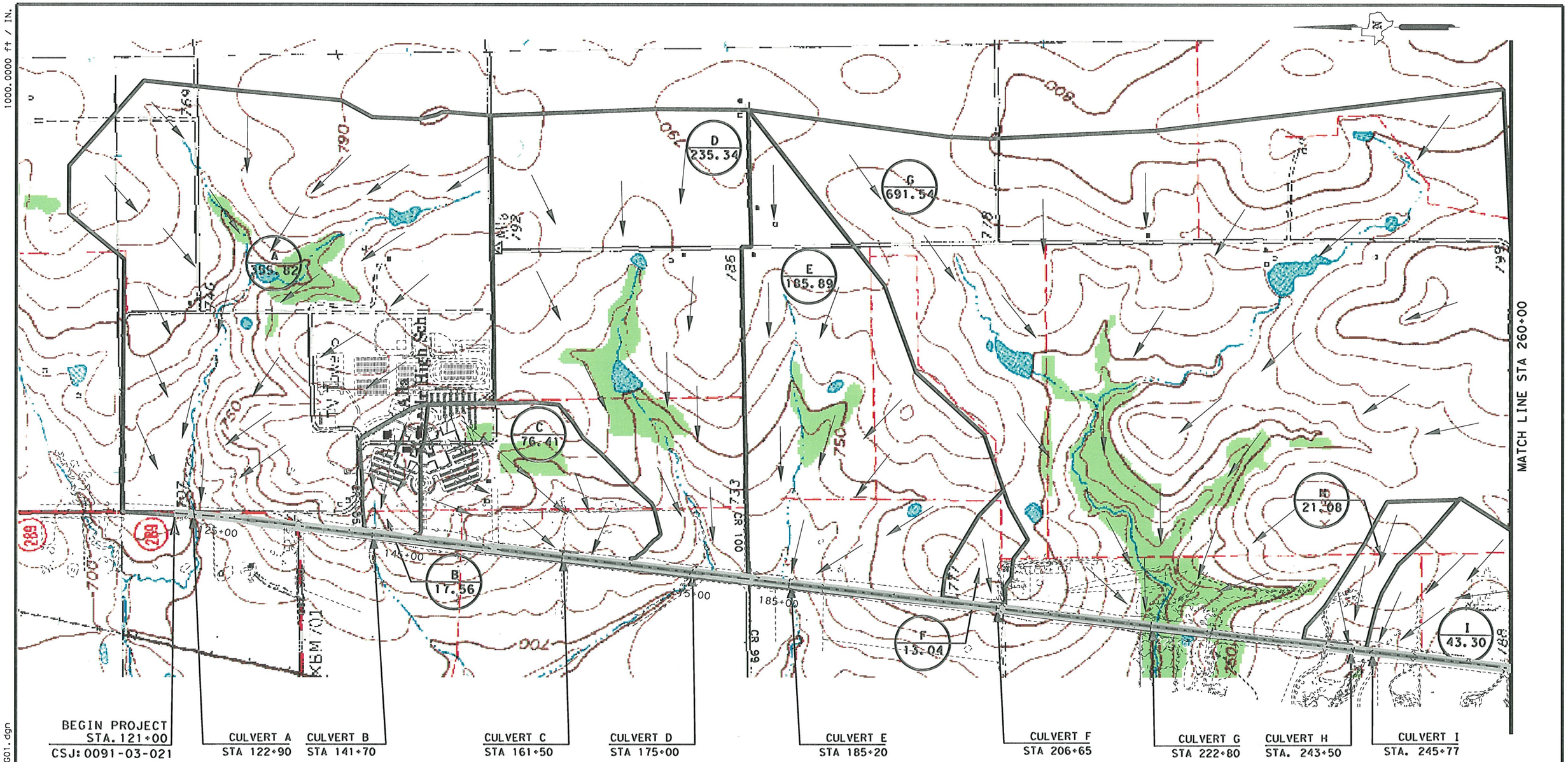

BEGIN PROJECT
STA. 121+00
CSJ: 0091-03-021

CULVERT A
STA 122+90

CULVERT B
STA 141+70

CULVERT C
STA 161+50

CULVERT D
STA 175+00

CULVERT E
STA 185+20

CULVERT F
STA 206+65

CULVERT G
STA 222+80

CULVERT H
STA. 243+50

CULVERT I
STA. 245+77

289DRNG01.dgn

LEGEND

- BOUNDRY AREA
- AN / DA — AREA NAME / DRAINAGE AREA (Acre)
- FLOW DIRECTION

STATE OF TEXAS
HASSAN SAM MOGHADASSI
84231
LICENSED PROFESSIONAL ENGINEER

H. Moghadassi , P.E. 07/12/11
Signature of Registrant & Date

Texas Department of Transportation
© 2011

SH 289
FM 455 TO N BUS 289C
EXTERIOR DRAINAGE AREA

SCALE: 1"= 1000 Sheet 1 of 6

DESIGN	FED.RD. DIV.NO.	STATE PROJECT NO.		HIGHWAY NO.
OE	6	SEE TITLE SHEET		SH 289
GRAPHICS	STATE	DISTRICT	COUNTY	SHEET NO.
OE	TEXAS	DALLAS	COLLIN	
CHECK	CONTROL	SECTION	JOB	
SM	0091	03	201107-01	177
CHECK				

P-201107-01

7/11/2011
T:\DALDGN#S\SH289\Design\sheets\DRNG\289DRNG01.dgn
...\sheets\DRNG\289DRNG01.dgn

TXDOT
1000.0000 ft / IN.

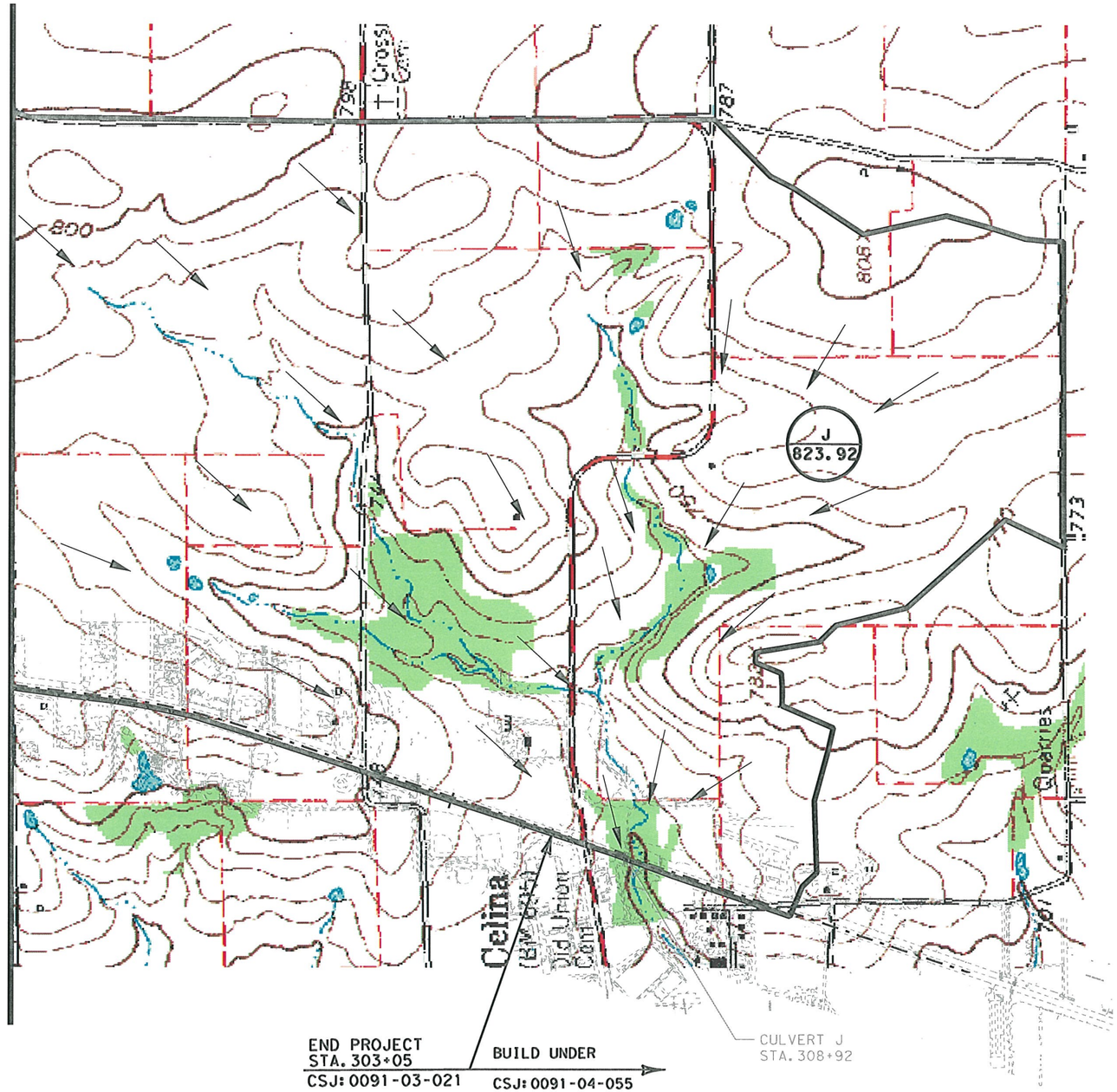

LEGEND

- BOUNDRY AREA
- AN / DA — AREA NAME / DRAINAGE AREA (Acre)
- FLOW DIRECTION

STATE OF TEXAS
HASSAN SAM MOGHADASSI
84231
LICENSED PROFESSIONAL ENGINEER

H. Moghadassi ,P.E. 7/12/11
Signature of Registrant & Date

289DRNG02.dgn

Texas Department of Transportation
© 2011

SH 289
FM 455 TO N BUS 289C
EXTERIOR DRAINAGE AREA

SCALE: 1"= 1000 Sheet 2 of 6

DESIGN	FED. RD. DIV. NO.	STATE PROJECT NO.		HIGHWAY NO.
OE	6	SEE TITLE SHEET		SH 289
GRAPHICS OE	STATE	DISTRICT	COUNTY	SHEET NO.
CHECK SM	TEXAS	DALLAS	COLLIN	178
CHECK	CONTROL	SECTION	JOB	
	0091	03	P-201107-01	

...\sheets\DRNG\289DRNG02.dgn

7/11/2011
T:\DALDGN#S\SH289\Design\sheets\DRNG\289DRNG02.dgn

TXDOT
1000.0000 ft / IN.

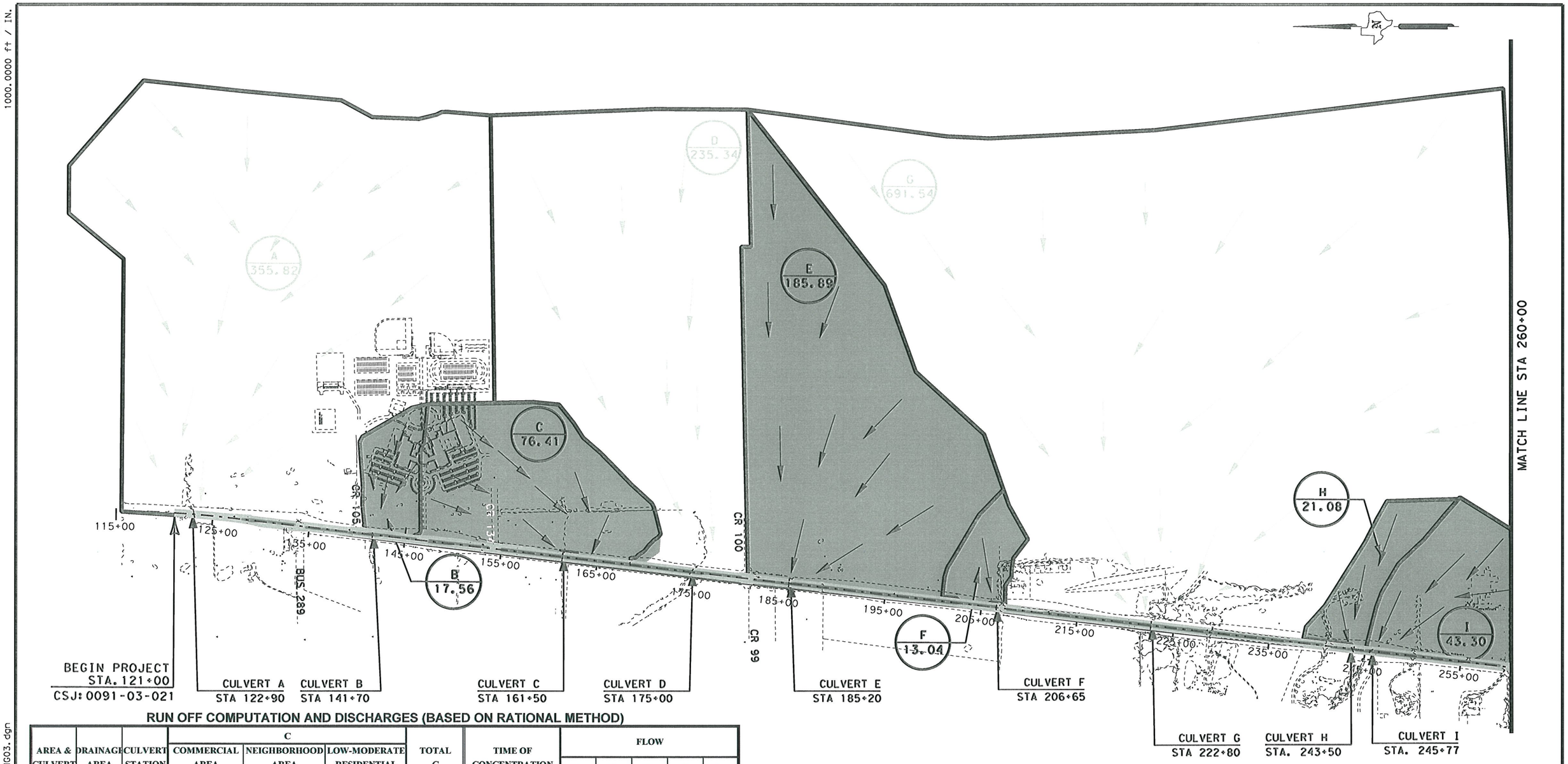

289DRNG03.dgn

RUN OFF COMPUTATION AND DISCHARGES (BASED ON RATIONAL METHOD)

AREA & CULVERT NAME	DRAINAGE AREA (ACRES)	CULVERT STATION	C			TOTAL C DEVELOPED	TIME OF CONCENTRATION t_c (MINUTES)	FLOW				
			COMMERCIAL AREA (BUSINESS) C = 0.70	NEIGHBORHOOD AREA (BUSINESS) C = 0.40	LOW-MODERATE RESIDENTIAL AREA C = 0.35			Q_5 (CFS)	Q_{10} (CFS)	Q_{25} (CFS)	Q_{50} (CFS)	Q_{100} (CFS)
B	17.56	141+71	17.56	--	--	0.70	$\frac{1544}{60 \times 1.8} = 14.30$	70.9	84.4	98.0	109.7	120.8
C	76.41	161+52	32.76	43.65	--	0.53	$\frac{2617}{60 \times 1.3} = 33.55$	145.5	173.5	201.3	225.7	248.1
E	185.89	185+17	36.79	--	149.10	0.42	$\frac{5012}{60 \times 1.0} = 83.53$	152.6	182.4	211.5	237.7	262.1
F	13.04	206+65	6.62	--	6.42	0.53	$\frac{1255}{60 \times 1.1} = 19.02$	34.5	41.1	47.7	53.4	58.7
H	21.08	243+52	7.63	--	13.45	0.48	$\frac{2014}{60 \times 1.0} = 33.57$	36.3	43.3	50.3	56.4	62.0
I	43.30	245+77	18.39	--	24.91	0.50	$\frac{2303}{60 \times 1.0} = 38.38$	71.5	85.3	98.9	111.0	122.0

LEGEND

- BOUNDRY AREA
- AN / DA — AREA NAME / DRAINAGE AREA (Acre)
- FLOW DIRECTION
- FUTURE DEVELOPED AREAS BY OTHERS (DRAINAGE INTO THE PROP SEWER SYSTEM)

STATE OF TEXAS
HASSAN SAM MOGHADASSI
84231
LICENSED
PROFESSIONAL ENGINEER

H. Moghadassi, P.E. 7/12/11
Signature of Registrant & Date

Texas Department of Transportation
© 2011

SH 289
FM 455 TO N BUS 289C
(RATIONAL METHOD)
DRAINAGE AREA & COMPUTATION

SCALE: 1"= 1000 Sheet 3 of 6

DESIGN	FED.RD. DIV.NO.	STATE PROJECT NO.		HIGHWAY NO.
SHM	6	SEE TITLE SHEET		SH 289
GRAPHICS	STATE	DISTRICT	COUNTY	SHEET NO.
OE	TEXAS	DALLAS	COLLIN	
CHECK	CONTROL	SECTION	JOB	179
SM	0091	03	P-201107-01	
CHECK				

7/11/2011
T:\DALDGN\S\SH289\Design\sheets\DRNG\289DRNG03.dgn
...\sheets\DRNG\289DRNG03.dgn

TXDOT
1000.0000 ft / IN.

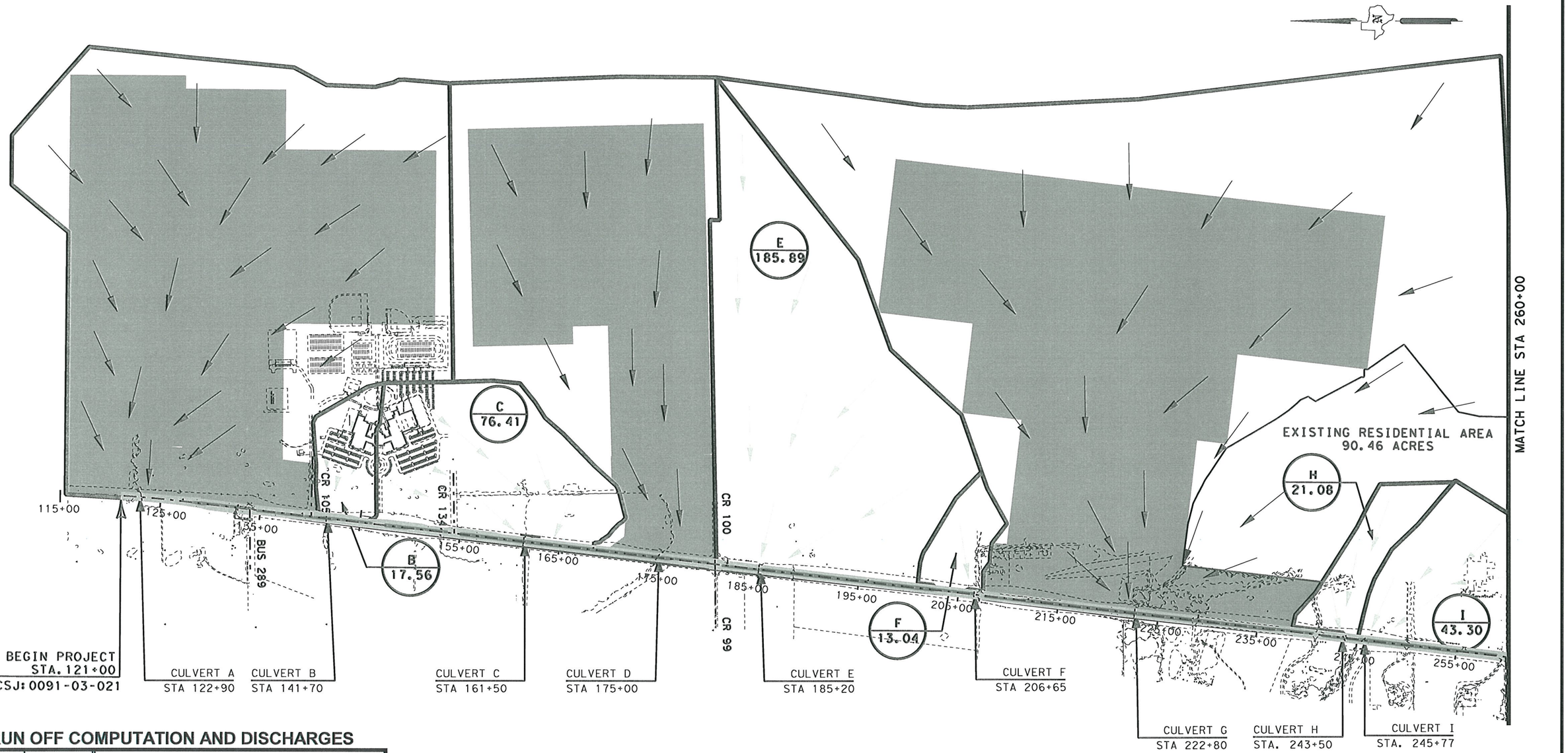

RUN OFF COMPUTATION AND DISCHARGES

DRAINAGE AREA	AREA (ACRES)	DISCHARGES BY TR-55				
		Q_5 (CFS)	Q_{10} (CFS)	Q_{25} (CFS)	Q_{50} (CFS)	Q_{100} (CFS)
A	355.82	626.13	760.82	908.55	1035.53	1163.53
B	16.94					
C	76.41					
D	235.34	471.24	574.33	688.37	785.82	881.04
E	185.89					
F	13.04					
G	691.54	874.85	1069.35	1283.82	1467.61	1639.42
H	21.08					
I	43.30					

STATE OF TEXAS
HASSAN SAM MOGHADASSI
84231
LICENSED
PROFESSIONAL ENGINEER

H. Moghadassi, P.E. 7/12/11
Signature of Registrant & Date

LEGEND

- BOUNDRY AREA
- AN / DA — AREA NAME / DRAINAGE AREA (Acre)
- FLOW DIRECTION
- FUTURE DEVELOPED AREAS BY OTHERS (DRAINAGE INTO THE PROP SEWER SYSTEM)

289DRNG04.dgn

Texas Department of Transportation
© 2011

SH 289
FM 455 TO N BUS 289C
(WIN-TR55)
DRAINAGE AREA & COMPUTATION

SCALE: 1"= 1000 Sheet 4 of 6

DESIGN	FED.RD. DIV.NO.	STATE PROJECT NO.		HIGHWAY NO.
OE	6	SEE TITLE SHEET		SH 289
GRAPHICS	STATE	DISTRICT	COUNTY	SHEET NO.
OE	TEXAS	DALLAS	COLLIN	
CHECK	CONTROL	SECTION	JOB	180
SM	0091	03	P.201107-01	
CHECK				

7/11/2011
...\sheets\drng\289DRNG04.dgn

TXDOT
1000.0000 ft / IN.

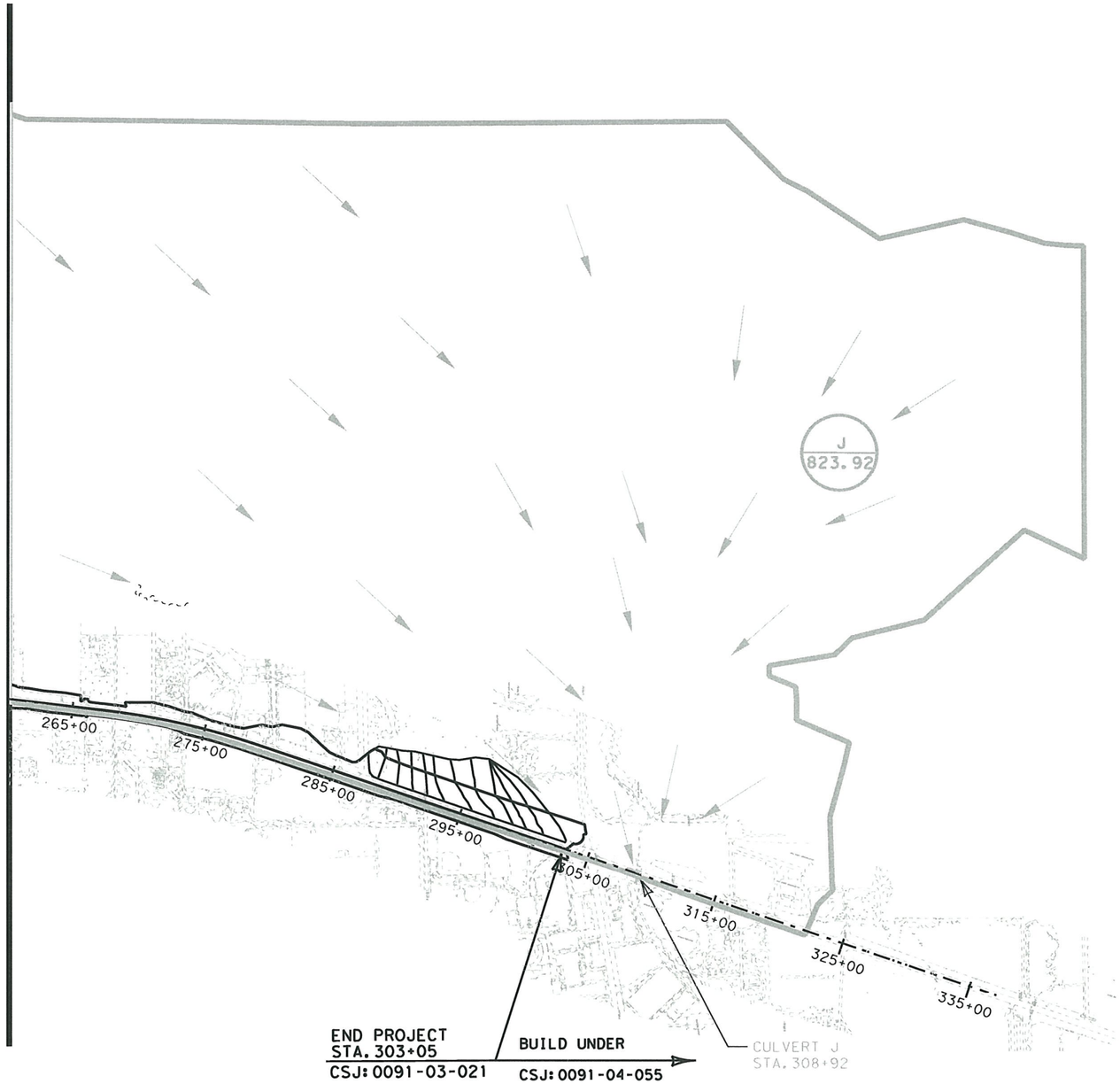

NOTE:
CALCULATIONS FOR EXTERIOR AREA (J) BY OTHERS UNDER, CSJ: 0091-04-055

LEGEND

- BOUNDRY AREA
- AN / DA — AREA NAME / DRAINAGE AREA (Acre)
- FLOW DIRECTION

STATE OF TEXAS
HASSAN SAM MOGHADASSI
84231
LICENSED
PROFESSIONAL ENGINEER

H. Moghadassi, P.E. 7/12/11
Signature of Registrant & Date

289DRNG05.dgn

Texas Department of Transportation
© 2011

SH 289
FM 455 TO N BUS 289C

DRAINAGE AREA & COMPUTATION

SCALE: 1"= 1000 Sheet 5 of 6

DESIGN	FED.RD. DIV.NO.	STATE PROJECT NO.		HIGHWAY NO.
OE	6	SEE TITLE SHEET		SH 289
GRAPHICS	STATE	DISTRICT	COUNTY	SHEET NO.
OE	TEXAS	DALLAS	COLLIN	
CHECK	CONTROL	SECTION	JOB	
SM	0091	03	[illegible]	181
CHECK				

P-201107-01

7/11/2011
...\sheets\drng\289DRNG05.dgn
t:\dal\dgn\s\sh289\design\sheets\drng\289DRNG05.dgn

TXDOT
1000.0000 ft / IN.

RUN OFF COMPUTATION AND DISCHARGES (BASED ON RATIONAL METHOD)

AREA & CULVERT NAME	DRAINAGE AREA (ACRES)	CULVERT STATION	C: COMMERCIAL AREA (BUSINESS) C = 0.70	C: NEIGHBORHOOD AREA (BUSINESS) C = 0.40	C: LOW-MODERATE RESIDENTIAL AREA C = 0.35	TOTAL C DEVELOPED	TIME OF CONCENTRATION t_c (MINUTES)	INTENSITY I_5 (IN/HR)	I_{10} (IN/HR)	I_{25} (IN/HR)	I_{50} (IN/HR)	I_{100} (IN/HR)	FLOW Q_5 (CFS)	Q_{10} (CFS)	Q_{25} (CFS)	Q_{50} (CFS)	Q_{100} (CFS)
B	17.56	141+71	17.56	--	--	0.70	$\frac{1544}{60 \times 1.8} = 14.30$	5.77	6.87	7.97	8.92	9.82	70.9	84.4	98.0	109.7	120.8
C	76.41	161+52	32.76	43.65	--	0.53	$\frac{2617}{60 \times 1.3} = 33.55$	3.59	4.28	4.97	5.57	6.13	145.5	173.5	201.3	225.7	248.1
E	185.89	185+17	36.79	--	149.10	0.42	$\frac{5012}{60 \times 1.0} = 83.53$	1.95	2.34	2.71	3.04	3.36	152.6	182.4	211.5	237.7	262.1
F	13.04	206+65	6.62	--	6.42	0.53	$\frac{1255}{60 \times 1.1} = 19.02$	4.99	5.94	6.90	7.72	8.49	34.5	41.1	47.7	53.4	58.7
H	21.08	243+52	7.63	--	13.45	0.48	$\frac{2014}{60 \times 1.0} = 33.57$	3.59	4.28	4.97	5.57	6.12	36.3	43.3	50.3	56.4	62.0
I	43.30	245+77	18.39	--	24.91	0.50	$\frac{2303}{60 \times 1.0} = 38.38$	3.30	3.94	4.57	5.13	5.63	71.5	85.3	98.9	111.0	122.0

RUN OFF COMPUTATION AND DISCHARGES (BASED ON TR-55)

AREA & CULVERT NAME	CULVERT STATION	SUBAREAS	DRAINAGE AREA (ACRES)	SUBAREAS IN DETAIL (ACRES): GRASS COVER > 75%	PAVED AREAS, ROOFS DRIVEWAYS	LOW - MODERATE: COMMERCIAL MIXED	LOW - MODERATE: RESIDENTIAL 6 HOUSE PER ACRE	OPEN PASTURE LAND (NOT BUILT)	RCN	t_c (MINUTES)	Q_5 (CFS) I_5=5.4 (IN/HR)	Q_{10} (CFS) I_{10}=6.45 (IN/HR)	Q_{25} (CFS) I_{25}=7.6 (IN/HR)	Q_{50} (CFS) I_{50}=8.6 (IN/HR)	Q_{100} (CFS) I_{100}=9.6 (IN/HR)
A	122+90	TOTAL = 355.82									626.13	760.82	908.55	1035.53	1163.53
		A1	86.71	36.00	22.00	24.00		4.71	87	17.04					
		A2-1	17.60					17.60	75	23.10					
		A3-1	3.21					3.21	80	8.58					
		A2-2	88.07	15.00	53.00	20.07			93	6.00					
		A3-2	152.23	39.79	26.00	61.91		24.53	89	12.60					
		PONDS	8.00												
D	175+00	TOTAL = 235.34									471.24	574.33	688.37	785.82	881.04
		D1	235.34		130.32	62.00		43.02	91	39.30					
G	222+80	TOTAL = 691.54									874.85	1069.85	1283.82	1467.61	1639.42
		G1-1	134.44		12.00		122.44		86	37.56					
		G2-1	263.49		24.00		239.49		88	56.40					
		G3-1	111.60		11.00		100.60		88	22.02					
		G3-2	57.79		6.00		51.79		88	6.00					
		G3-3	95.37		7.00	40.95	47.42		91	6.00					
		PONDS	28.69												

STATE OF TEXAS
HASSAN SAM MOGHADASSI
84231
LICENSED
PROFESSIONAL ENGINEER

H. Moghadassi, P.E. 7/12/11
Signature of Registrant & Date

289DRNG06.dgn

Texas Department of Transportation
© 2011

SH 289
FM 455 TO N BUS 289C

DRAINAGE AREA & COMPUTATION

SCALE: 1"= 1000 Sheet 6 of 6

DESIGN	FED.RD. DIV.NO.	STATE PROJECT NO.		HIGHWAY NO.
OE	6	SEE TITLE SHEET		SH 289
GRAPHICS OE	STATE	DISTRICT	COUNTY	SHEET NO.
CHECK SM	TEXAS	DALLAS	COLLIN	182
CHECK	CONTROL	SECTION	JOB	
	0091	03	P-201107-01	

7/11/2011
...\sheets\drng\289DRNG06.dgn
...\dal\dgn\s\sh289\design\sheets\drng\289DRNG06.dgn

TXDOT
120.0000 ft / IN.

0 60 120
SCALE IN FEET

LEGEND

- DRAINAGE BOUNDRY
- XX / X.XX — AREA NAME / DRAINAGE AREA (Acre)
- FLOW DIRECTION
- EXISTING R.O.W
- PROPOSED R.O.W
- STUB-OUT SUBAREAS

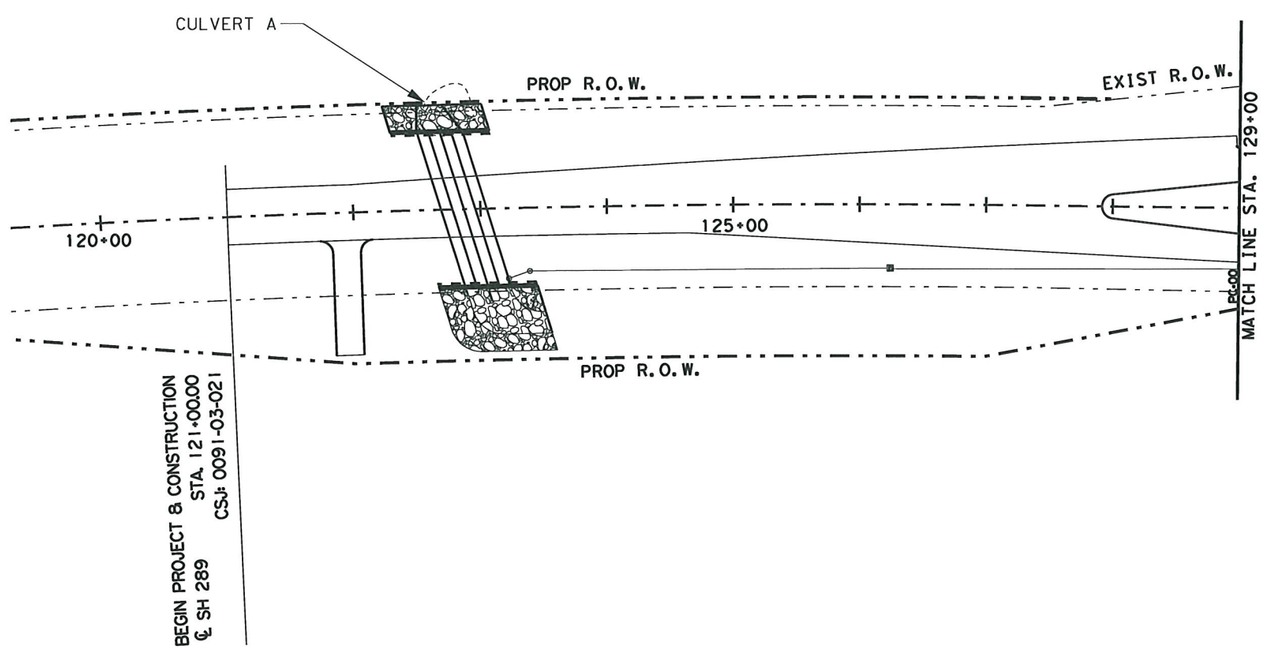

STATE OF TEXAS
HASSAN SAM MOGHADASSI
84231
LICENSED
PROFESSIONAL ENGINEER

H. Moghadassi , P.E. 7/12/11
Signature of Registrant & Date

289*Interior*01.dgn

Texas Department of Transportation
© 2011

SH 289
FM 455 TO N BUS 289C
INTERIOR DRAINAGE AREA MAP
BEGIN CONSTRUCTION TO STA. 129+00

SCALE: 1"=120' SHEET 1 OF 14

DESIGN	FED. RD. DIV. NO.	STATE PROJECT NO.		HIGHWAY NO.
SHM	6	SEE TITLE SHEET		SH 289
GRAPHICS OE	STATE	DISTRICT	COUNTY	SHEET NO.
CHECK SM	TEXAS	DALLAS	COLLIN	183
CHECK	CONTROL	SECTION	JOB	
	0091	03	P-201107-01	

...\289*Interior*01.dgn

7/11/2011
t:\dal\dgn*s\sh289\design\sheets\DRNG\Interior*Drainage*Area*Map\289*Interior*01.dgn

TXDOT
120.0000 ft / IN.

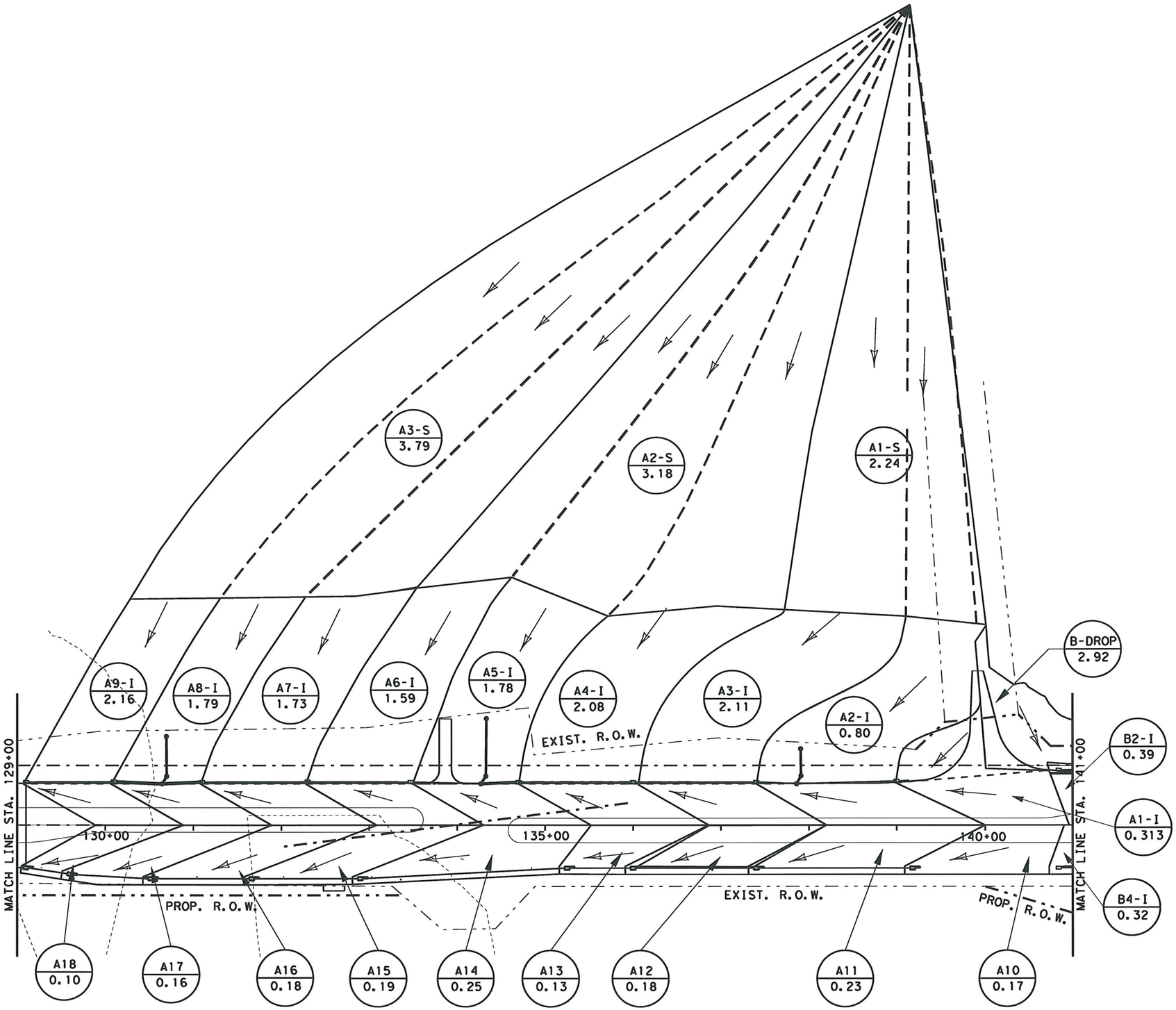

0 60 120
SCALE IN FEET

LEGEND

- DRAINAGE BOUNDRY
- XX / X.XX — AREA NAME / DRAINAGE AREA (Acre)
- FLOW DIRECTION
- EXISTING R.O.W
- PROPOSED R.O.W
- STUB-OUT SUBAREAS

STATE OF TEXAS
HASSAN SAM MOGHADASSI
84231
LICENSED PROFESSIONAL ENGINEER

H. Moghadassi , P.E. 7/12/11
Signature of Registrant & Date

289*Interior*02.dgn

Texas Department of Transportation
© 2011

SH 289
FM 455 TO N BUS 289C
INTERIOR DRAINAGE AREA MAP
STA. 129+00 TO STA. 141+00

SCALE: 1"=120' SHEET 2 OF 14

DESIGN	FED. RD. DIV. NO.	STATE PROJECT NO.		HIGHWAY NO.
SHM	6	SEE TITLE SHEET		SH 289
GRAPHICS OE	STATE	DISTRICT	COUNTY	SHEET NO.
CHECK SM	TEXAS	DALLAS	COLLIN	184
CHECK	CONTROL	SECTION	JOB	
	0091	03	P201107-01	

7/11/2011
t:\dal\dgn\s\sh289\design\sheets\DRNG\Interior*Drainage*Area*Map\289*Interior*02.dgn
...\289*Interior*02.dgn

TXDOT
120.0000 ft / IN.

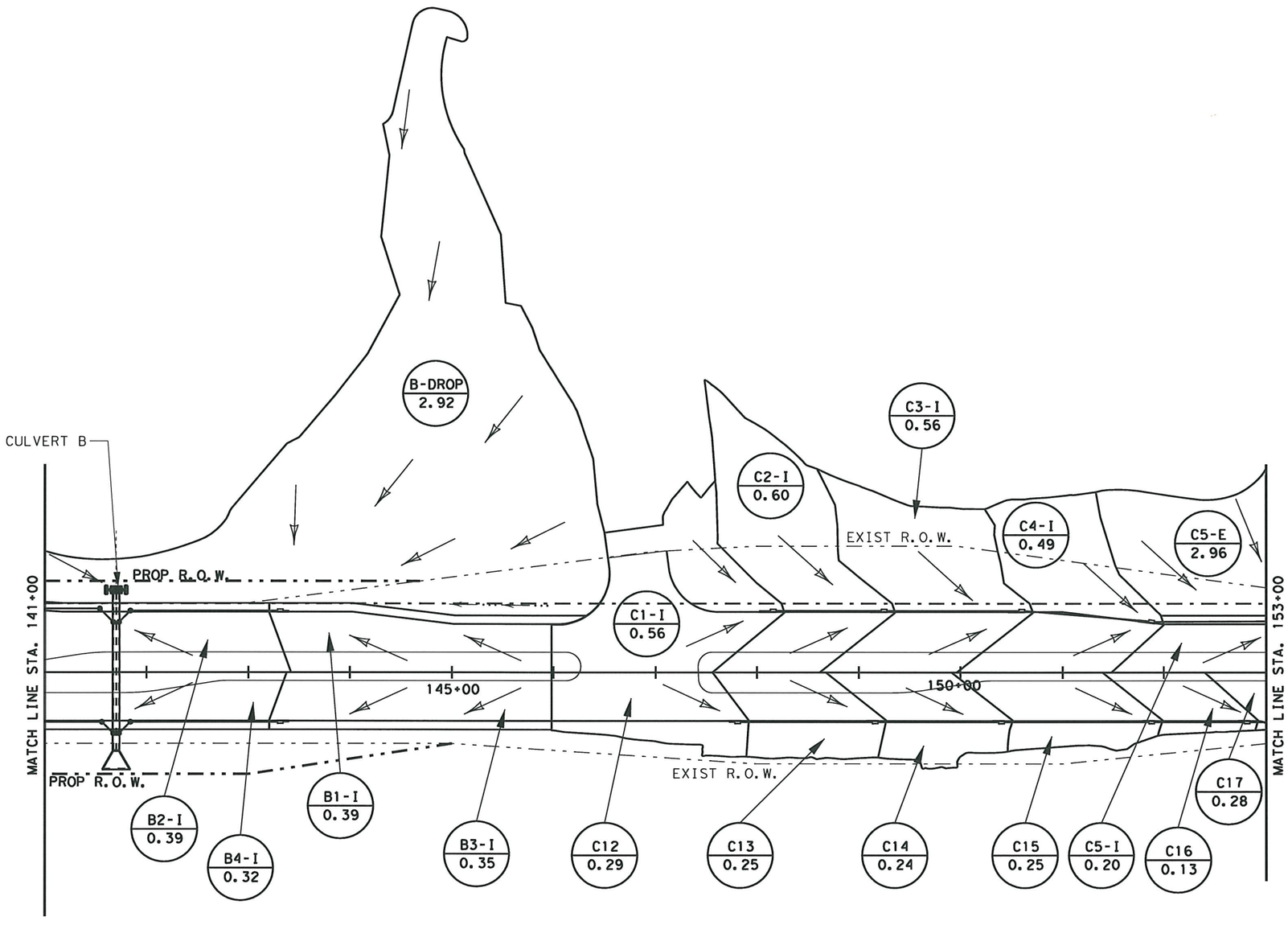

LEGEND

- DRAINAGE BOUNDRY
- XX / X.XX — AREA NAME / DRAINAGE AREA (Acre)
- FLOW DIRECTION
- EXISTING R.O.W
- PROPOSED R.O.W
- STUB-OUT SUBAREAS

H. Moghadassi, P.E. 7/12/11
Signature of Registrant & Date

289*Interior*03.dgn

Texas Department of Transportation
© 2011

SH 289
FM 455 TO N BUS 289C
INTERIOR DRAINAGE AREA MAP
STA. 141+00 TO STA. 153+00

SCALE: 1"=120' SHEET 3 OF 14

DESIGN	FED. RD. DIV. NO.	STATE PROJECT NO.		HIGHWAY NO.
SHM	6	SEE TITLE SHEET		SH 289
GRAPHICS	STATE	DISTRICT	COUNTY	SHEET NO.
OE	TEXAS	DALLAS	COLLIN	
CHECK	CONTROL	SECTION	JOB	185
SM	0091	03	P.201107-01	
CHECK				

7/11/2011
t:\dgn*s\sh289\design\sheets\DRNG\Interior*Drainage*Area*Map\289*Interior*03.dgn
...\289*Interior*03.dgn

TXDOT
120.0000 ft / IN.

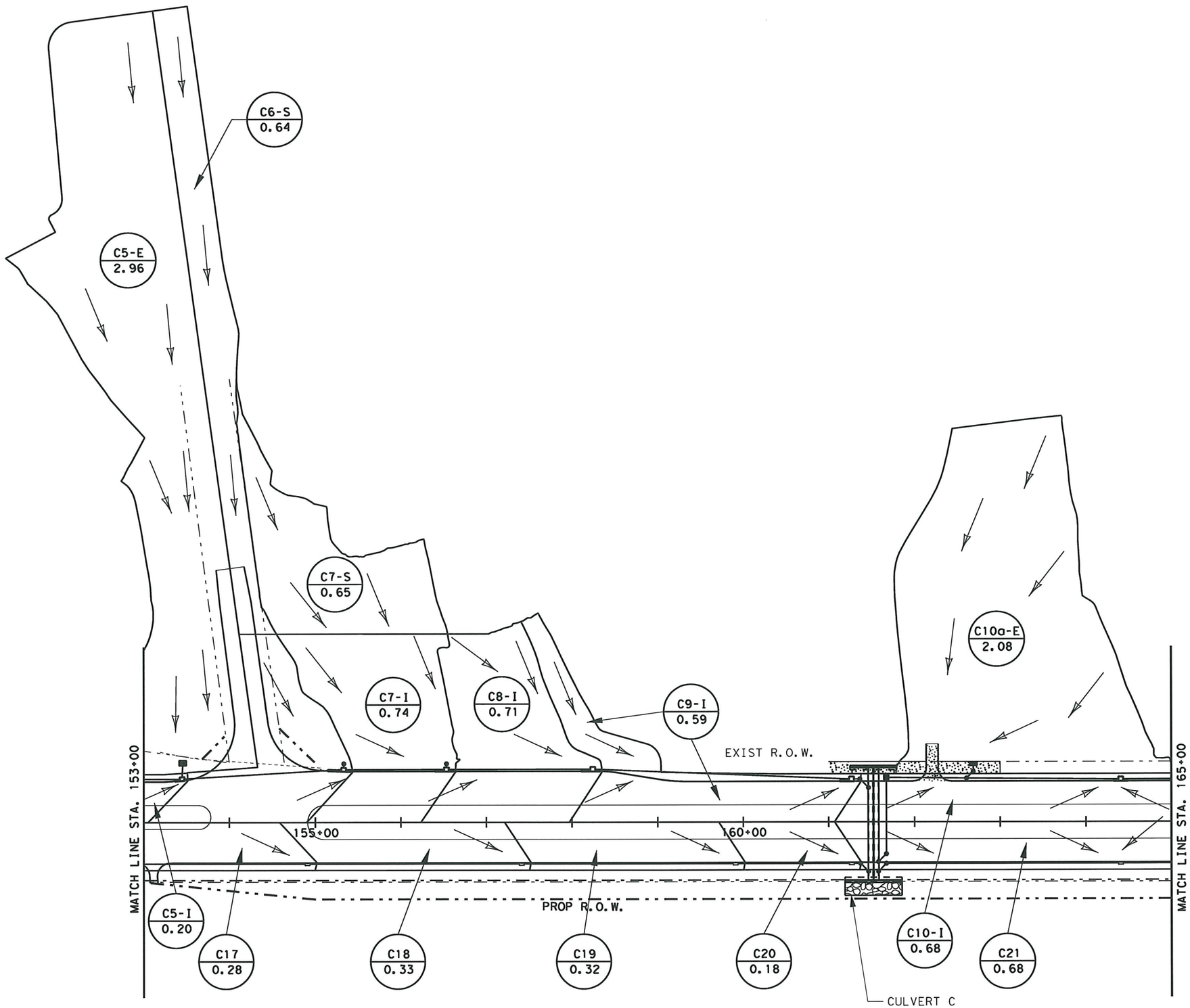

0 60 120
SCALE IN FEET

LEGEND

- DRAINAGE BOUNDRY
- XX / X.XX — AREA NAME / DRAINAGE AREA (Acre)
- FLOW DIRECTION
- EXISTING R.O.W
- PROPOSED R.O.W
- STUB-OUT SUBAREAS

STATE OF TEXAS
HASSAN SAM MOGHADASSI
84231
LICENSED
PROFESSIONAL ENGINEER

H. Moghadassi , P.E. 07/12/11
Signature of Registrant & Date

289*Interior*04.dgn

Texas Department of Transportation
© 2011

SH 289
FM 455 TO N BUS 289C
INTERIOR DRAINAGE AREA MAP
STA. 153+00 TO STA. 165+00

SCALE: 1"=120' SHEET 4 OF 14

DESIGN	FED. RD. DIV. NO.	STATE PROJECT NO.		HIGHWAY NO.
SHM	6	SEE TITLE SHEET		SH 289
GRAPHICS	STATE	DISTRICT	COUNTY	SHEET NO.
OE	TEXAS	DALLAS	COLLIN	
CHECK	CONTROL	SECTION	JOB	186
SM	0091	03	P-201107-01	
CHECK				

7/11/2011
t:\dal\dgn*s\sh289\design\sheets\DRNG\Interior*Drainage*Area*Map\289*Interior*04.dgn
...\289*Interior*04.dgn

TXDOT
120.0000 ft / IN.

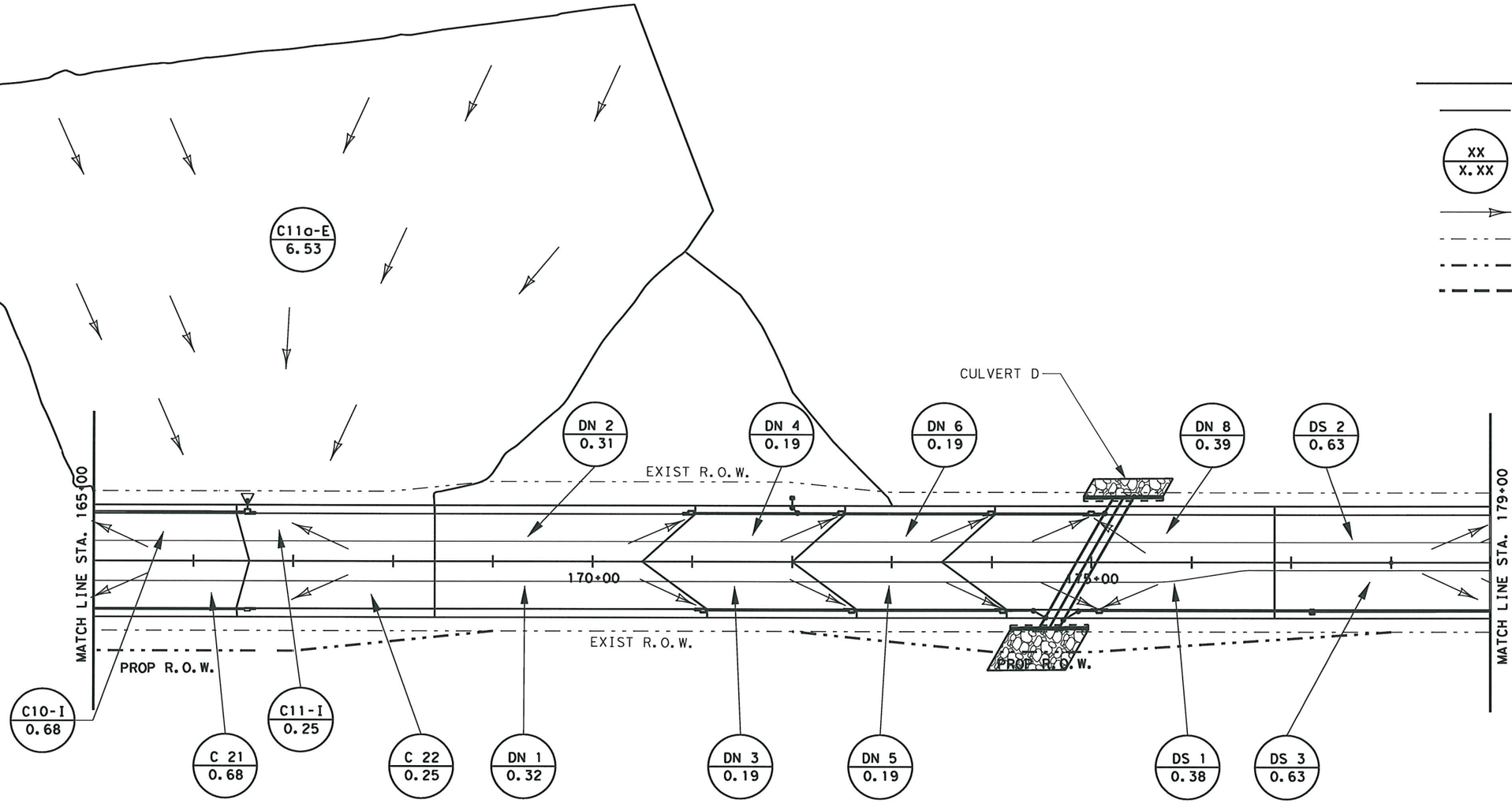

0 60 120
SCALE IN FEET

LEGEND

- DRAINAGE BOUNDRY
- XX / X.XX — AREA NAME / DRAINAGE AREA (Acre)
- FLOW DIRECTION
- EXISTING R.O.W
- PROPOSED R.O.W
- STUB-OUT SUBAREAS

STATE OF TEXAS
HASSAN SAM MOGHADASSI
84231
LICENSED
PROFESSIONAL ENGINEER

H. Moghadassi , P.E. 7/12/11
Signature of Registrant & Date

289*Interior*05.dgn

Texas Department of Transportation
© 2011

SH 289
FM 455 TO N BUS 289C
INTERIOR DRAINAGE AREA MAP
STA. 165+00 TO STA. 179+00

SCALE: 1"=120' SHEET 5 OF 14

DESIGN	FED. RD. DIV. NO.	STATE PROJECT NO.		HIGHWAY NO.
SHM	6	SEE TITLE SHEET		SH 289
GRAPHICS OE	STATE	DISTRICT	COUNTY	SHEET NO.
CHECK SM	TEXAS	DALLAS	COLLIN	187
CHECK	CONTROL	SECTION	JOB	
	0091	03	02	

P-201107-01

7/11/2011
t:\dal\dgn*s\sh289\design\sheets\DRNG\Interior*Drainage*Area*Map\289*Interior*05.dgn
...\289*Interior*05.dgn

TXDOT
120.0000 ft / IN.

0 60 120
SCALE IN FEET

LEGEND

- DRAINAGE BOUNDRY
- XX / X.XX — AREA NAME / DRAINAGE AREA (Acre)
- FLOW DIRECTION
- EXISTING R.O.W
- PROPOSED R.O.W
- STUB-OUT SUBAREAS

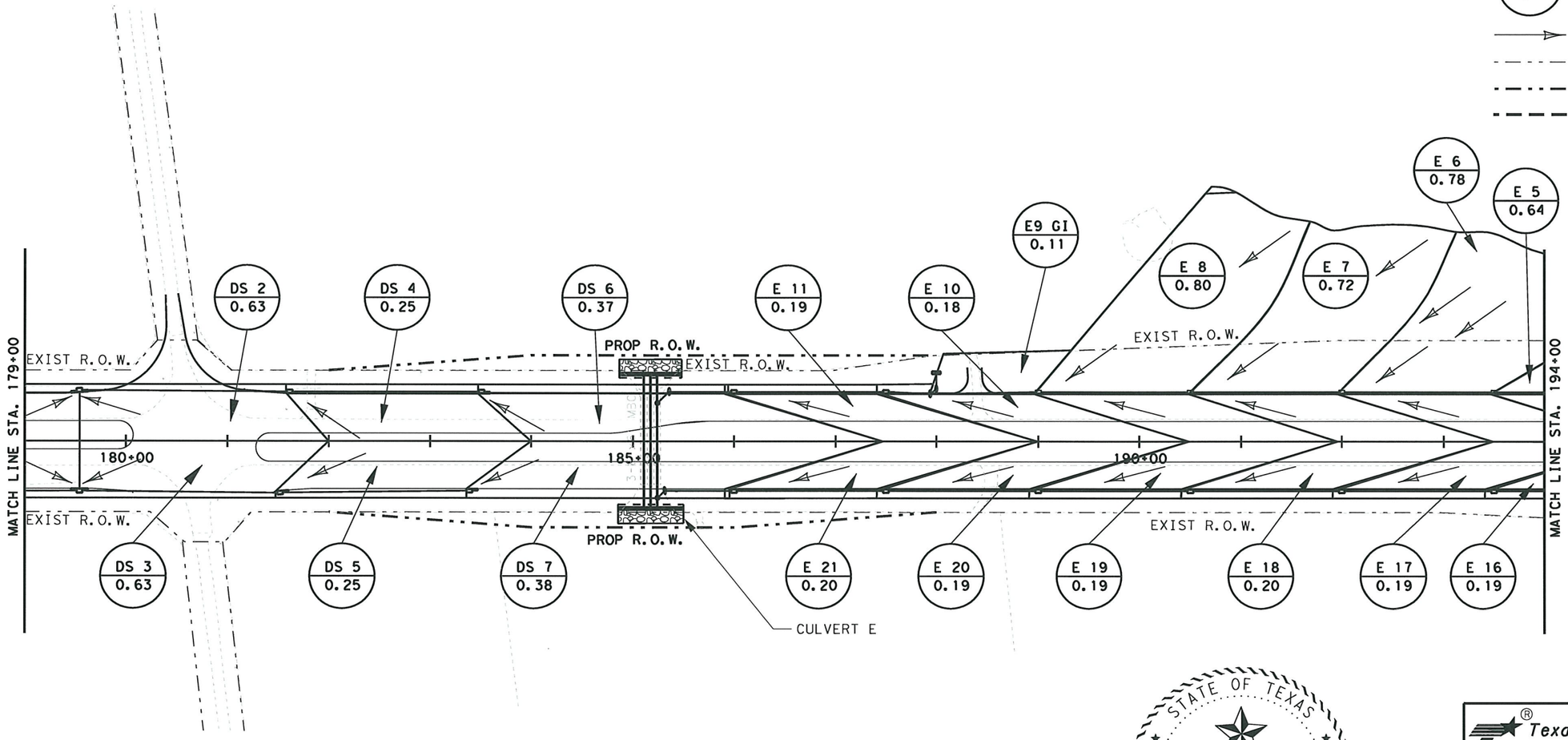

STATE OF TEXAS
HASSAN SAM MOGHADASSI
84231
LICENSED
PROFESSIONAL ENGINEER

H. Moghadassi , P.E. 7/12/11
Signature of Registrant & Date

289*Interior*06.dgn

Texas Department of Transportation
© 2011

SH 289
FM 455 TO N BUS 289C
INTERIOR DRAINAGE AREA MAP
STA. 179+00 TO STA. 194+00

SCALE: 1"=120' SHEET 6 OF 14

DESIGN	FED.RD. DIV.NO.	STATE PROJECT NO.		HIGHWAY NO.
SHM	6	SEE TITLE SHEET		SH 289
GRAPHICS OE	STATE	DISTRICT	COUNTY	SHEET NO.
CHECK SM	TEXAS	DALLAS	COLLIN	188
CHECK	CONTROL	SECTION	JOB	
	0091	03	020	

P-201107-01

7/11/2011
...\289*Interior*06.dgn
t:\dal\dgn\s\sh289\design\sheets\DRNG\Interior*Drainage*Area*Map\289*Interior*06.dgn

TXDOT
120.0000 ft / IN.

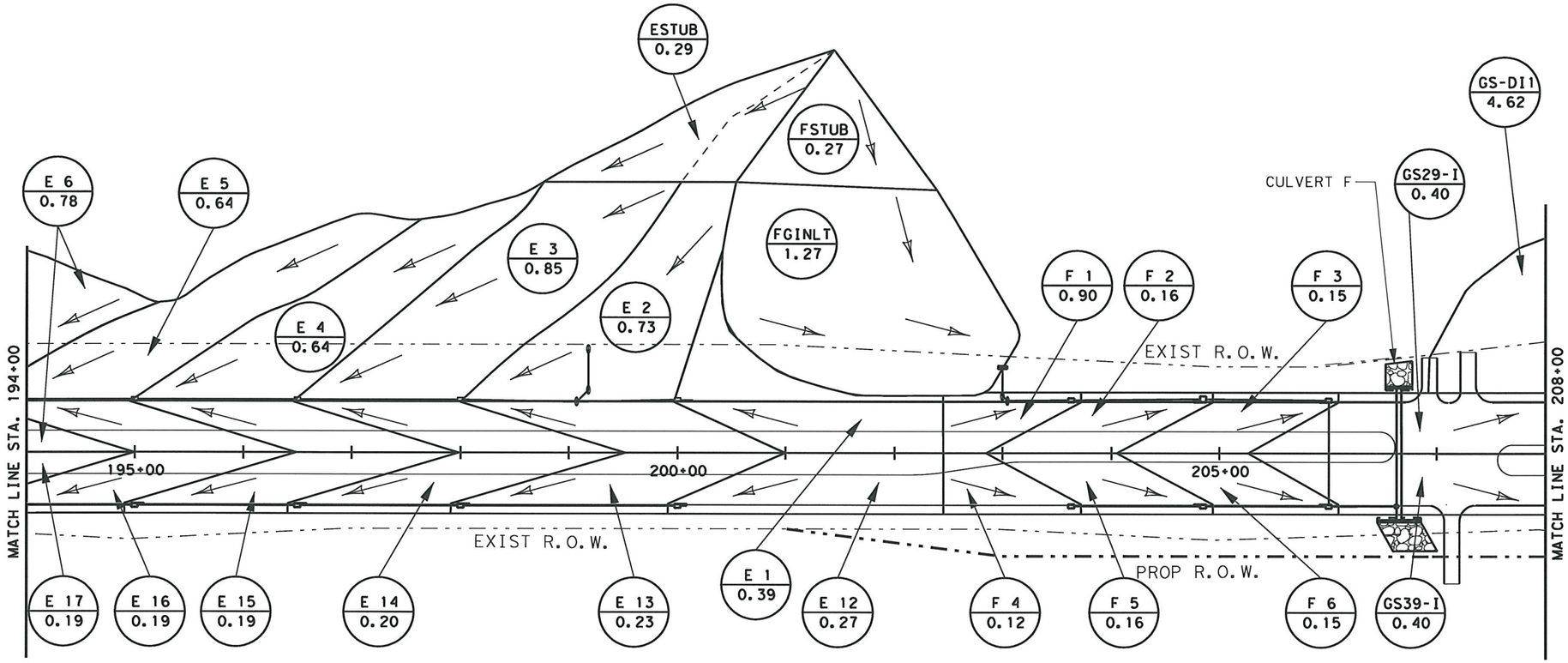

0 60 120
SCALE IN FEET

LEGEND

- DRAINAGE BOUNDRY
- XX / X.XX — AREA NAME / DRAINAGE AREA (Acre)
- FLOW DIRECTION
- EXISTING R.O.W
- PROPOSED R.O.W
- STUB-OUT SUBAREAS

STATE OF TEXAS
HASSAN SAM MOGHADASSI
84231
LICENSED
PROFESSIONAL ENGINEER

H. Moghadassi ,P.E. 7/12/11
Signature of Registrant & Date

289*Interior*07.dgn

Texas Department of Transportation
© 2011

SH 289
FM 455 TO N BUS 289C
INTERIOR DRAINAGE AREA MAP
STA. 194+00 TO STA. 208+00

SCALE: 1"=120' SHEET 7 OF 14

DESIGN	FED. RD. DIV. NO.	STATE PROJECT NO.		HIGHWAY NO.
SHM	6	SEE TITLE SHEET		SH 289
GRAPHICS	STATE	DISTRICT	COUNTY	SHEET NO.
OE	TEXAS	DALLAS	COLLIN	
CHECK	CONTROL	SECTION	JOB	189
SM	0091	03	02	
CHECK			P.201107-01	

7/11/2011
t:\dal\dgn\s\sh289\design\sheets\DRNG\Interior*Drainage*Area*Map\289*Interior*07.dgn
...\289*Interior*07.dgn

TXDOT
120.0000 ft / IN.

0 60 120
SCALE IN FEET

LEGEND

- DRAINAGE BOUNDRY
- XX / X.XX — AREA NAME / DRAINAGE AREA (Acre)
- FLOW DIRECTION
- EXISTING R.O.W
- PROPOSED R.O.W
- STUB-OUT SUBAREAS

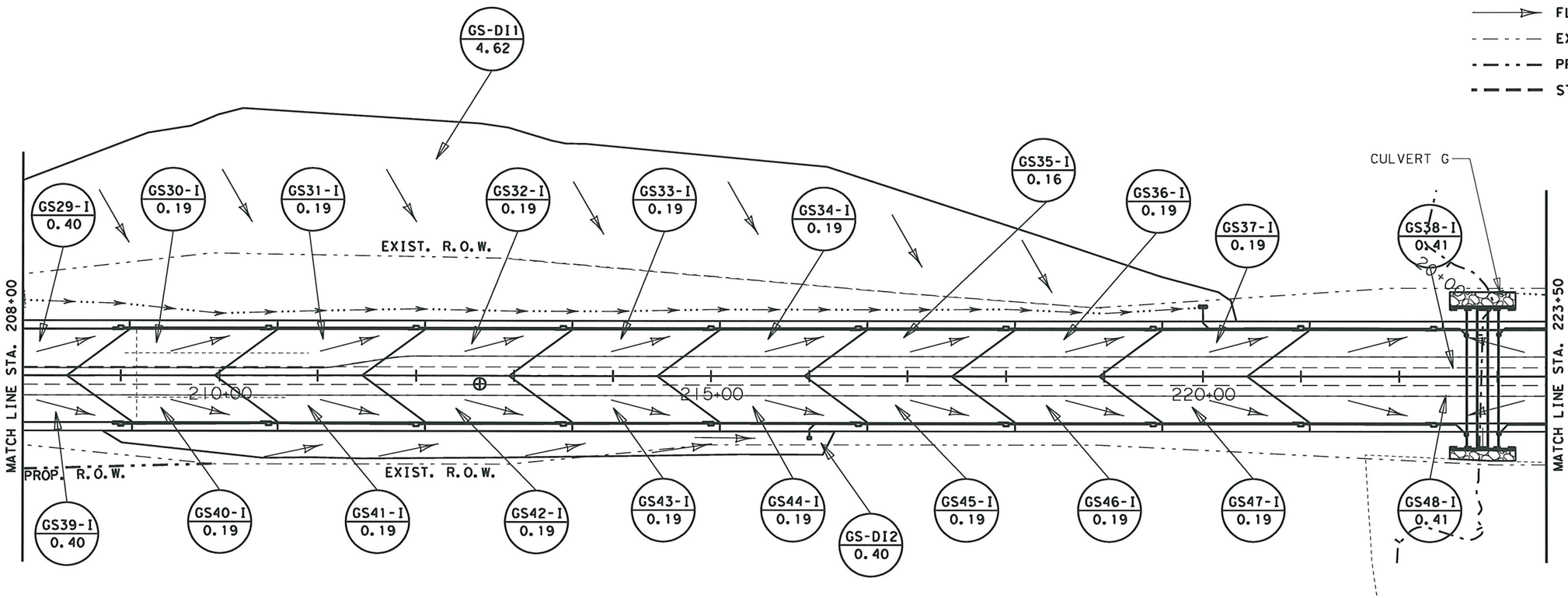

STATE OF TEXAS
HASSAN SAM MOGHADASSI
84231
LICENSED
PROFESSIONAL ENGINEER

H. Moghadassi , P.E. 07/12/11
Signature of Registrant & Date

289*Interior*08.dgn

Texas Department of Transportation
© 2011

SH 289
FM 455 TO N BUS 289C
INTERIOR DRAINAGE AREA MAP
STA. 208+00 TO STA. 223+50

SCALE: 1"=120' SHEET 8 OF 14

DESIGN	FED. RD. DIV. NO.	STATE PROJECT NO.		HIGHWAY NO.
SHM	6	SEE TITLE SHEET		SH 289
GRAPHICS	STATE	DISTRICT	COUNTY	SHEET NO.
OE	TEXAS	DALLAS	COLLIN	
CHECK SM	CONTROL	SECTION	JOB	190
CHECK	0091	03	020	P-201107-01

7/11/2011
t:\dal\dgn*s\sh289\design\sheets\DRNG\Interior*Drainage*Area*Map\289*Interior*08.dgn
...\289*Interior*08.dgn

TXDOT
120.0000 ft / IN.

0 60 120
SCALE IN FEET

LEGEND

- DRAINAGE BOUNDRY
- XX / X.XX — AREA NAME / DRAINAGE AREA (Acre)
- FLOW DIRECTION
- EXISTING R.O.W
- PROPOSED R.O.W
- STUB-OUT SUBAREAS

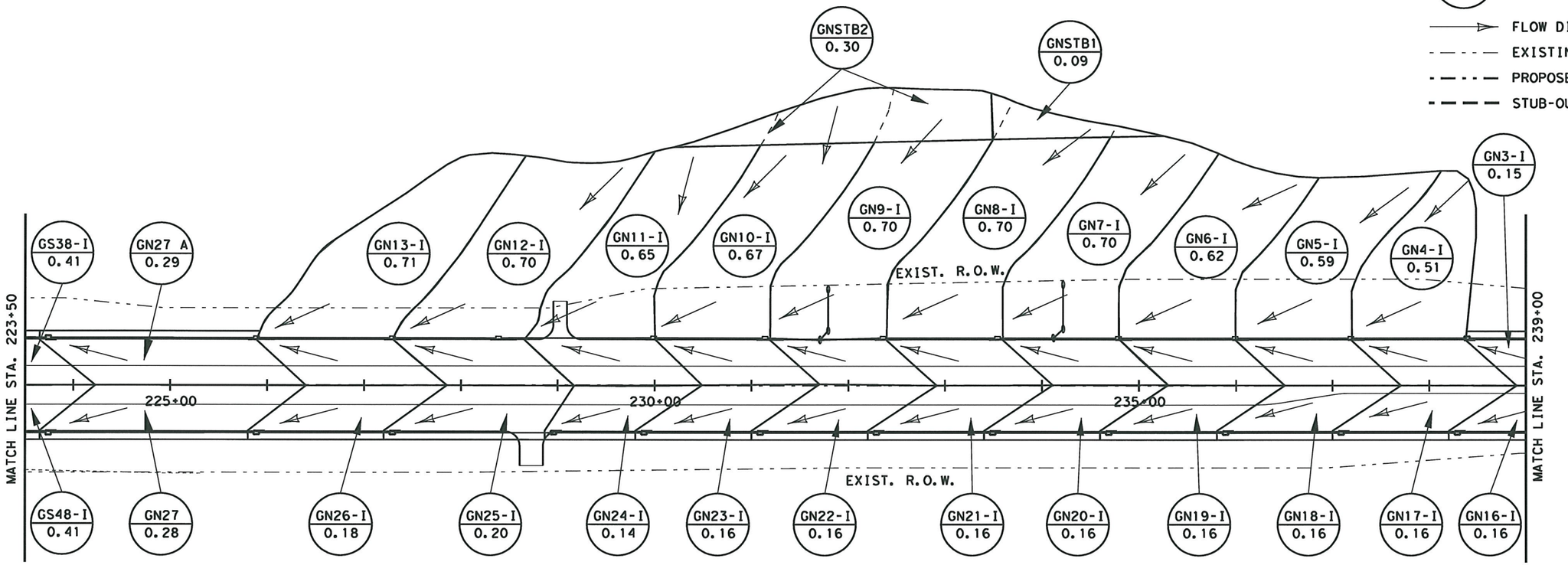

STATE OF TEXAS
HASSAN SAM MOGHADASSI
84231
LICENSED
PROFESSIONAL ENGINEER

H. Moghadassi , P.E. 7/12/11
Signature of Registrant & Date

289*Interior*09.dgn

Texas Department of Transportation
© 2011

SH 289
FM 455 TO N BUS 289C
INTERIOR DRAINAGE AREA MAP
STA. 223+50 TO STA. 239+00

SCALE: 1"=120' SHEET 9 OF 14

DESIGN	FED. RD. DIV. NO.	STATE PROJECT NO.		HIGHWAY NO.
SHM	6	SEE TITLE SHEET		SH 289
GRAPHICS OE	STATE	DISTRICT	COUNTY	SHEET NO.
CHECK SM	TEXAS	DALLAS	COLLIN	191
CHECK	CONTROL	SECTION	JOB	
	0091	03	02	

P.201107-01

7/11/2011
t:\dal\dgn\s\sh289\design\sheets\DRNG\Interior*Drainage*Area*Map\289*Interior*09.dgn
...\289*Interior*09.dgn

TXDOT
120.0000 ft / IN.

0 60 120
SCALE IN FEET

LEGEND

- DRAINAGE BOUNDRY
- XX / X.XX — AREA NAME / DRAINAGE AREA (Acre)
- FLOW DIRECTION
- EXISTY R.O.W
- PROPOSED R.O.W
- STUB-OUT SUBAREAS

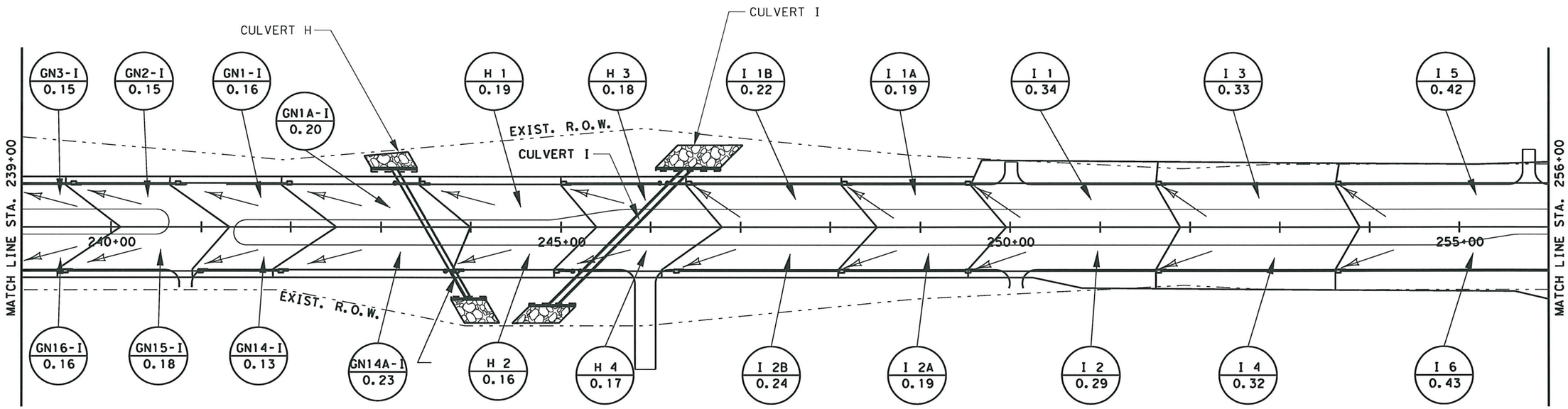

STATE OF TEXAS
HASSAN SAM MOGHADASSI
84231
LICENSED
PROFESSIONAL ENGINEER

H. Moghadassi , P.E. 7/12/11
Signature of Registrant & Date

289*Interior*10.dgn

Texas Department of Transportation
© 2011

SH 289
FM 455 TO N BUS 289C
INTERIOR DRAINAGE AREA MAP
STA. 239+00 TO STA. 256+00

SCALE: 1"=120' SHEET 10 OF 14

DESIGN	FED. RD. DIV. NO.	STATE PROJECT NO.		HIGHWAY NO.
SHM	6	SEE TITLE SHEET		SH 289
GRAPHICS OE	STATE	DISTRICT	COUNTY	SHEET NO.
CHECK SM	TEXAS	DALLAS	COLLIN	192
CHECK	CONTROL	SECTION	JOB	
	0091	03	201	

P.201107-01

...\289*Interior*10.dgn

7/11/2011
t:\dal\dgn\s\sh289\design\sheets\DRNG\Interior*Drainage*Area*Map\289*Interior*10.dgn

TXDOT
120.0000 ft / IN.

0 60 120
SCALE IN FEET

LEGEND

- DRAINAGE BOUNDRY
- XX / X.XX — AREA NAME / DRAINAGE AREA (Acre)
- FLOW DIRECTION
- EXISTING R.O.W
- PROPOSED R.O.W
- STUB-OUT SUBAREAS

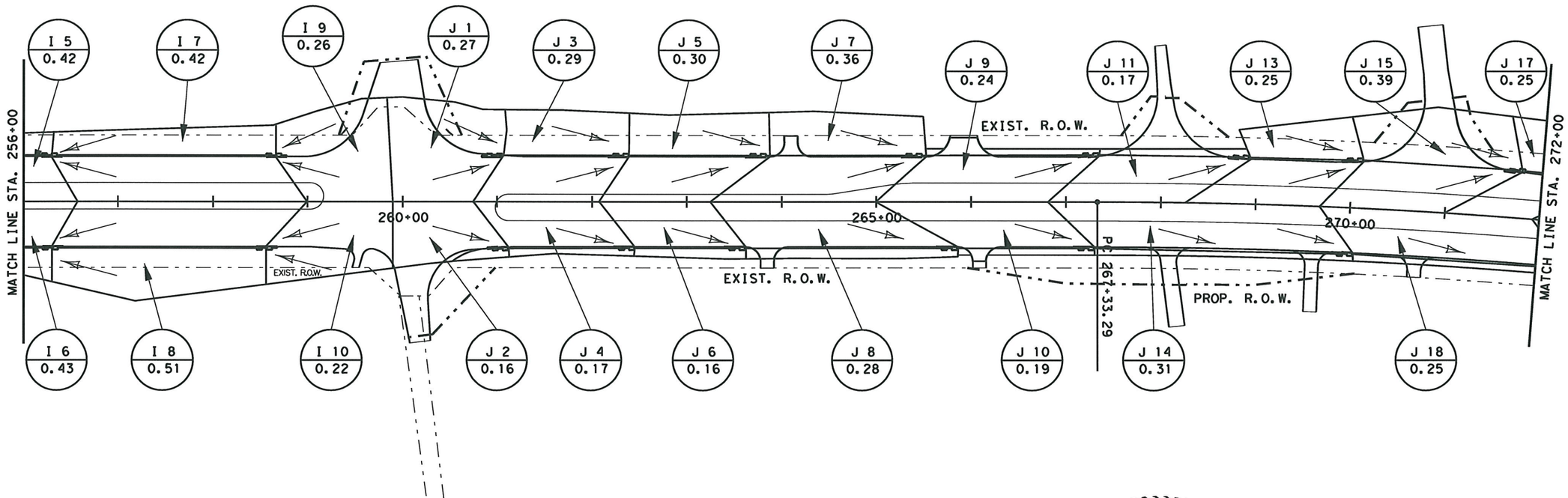

STATE OF TEXAS
HASSAN SAM MOGHADASSI
84231
LICENSED
PROFESSIONAL ENGINEER

H. Moghadassi ,P.E. 7/12/11
Signature of Registrant & Date

289*Interior*11.dgn

Texas Department of Transportation
© 2011

SH 289
FM 455 TO N BUS 289C
INTERIOR DRAINAGE AREA MAP
STA. 256+00 TO STA. 272+00

SCALE: 1"=120' SHEET 11 OF 14

DESIGN	FED. RD. DIV. NO.	STATE PROJECT NO.		HIGHWAY NO.
SHM	6	SEE TITLE SHEET		SH 289
GRAPHICS	STATE	DISTRICT	COUNTY	SHEET NO.
OE	TEXAS	DALLAS	COLLIN	
CHECK	CONTROL	SECTION	JOB	193
SM	0091	03	020	
CHECK				

P-201107-01

7/11/2011
I:\dal\dgn\s\sh289\design\sheets\DRNG\Interior*Drainage*Area*Map\289*Interior*11.dgn
...\289*Interior*11.dgn

$USER$
$SCALE$

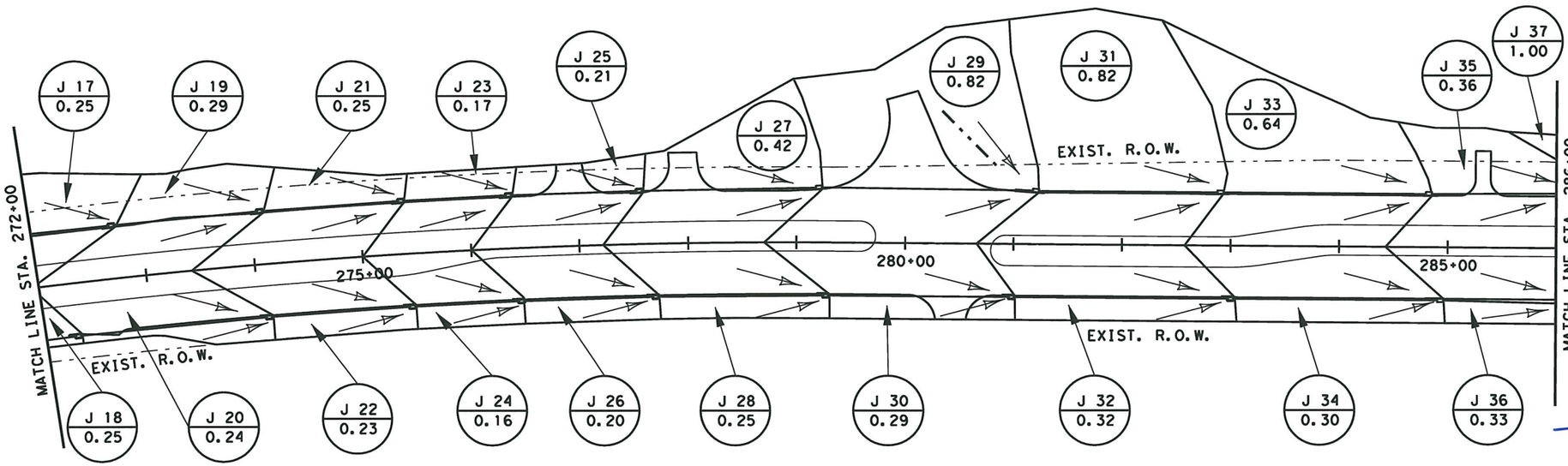

0 60 120
SCALE IN FEET

LEGEND

- DRAINAGE BOUNDRY
- XX / X.XX — AREA NAME / DRAINAGE AREA (Acre)
- FLOW DIRECTION
- EXISTING R.O.W
- PROPOSED R.O.W
- STUB-OUT SUBAREAS

STATE OF TEXAS
HASSAN SAM MOGHADASSI
84231
LICENSED
PROFESSIONAL ENGINEER

H.Moghadassi ,P.E. 12/29/11
Signature of Registrant & Date

$FILES$

Texas Department of Transportation
© 2011

SH 289

FM 455 TO N BUS 289C

INTERIOR DRAINAGE AREA MAP

STA. 272+00 TO STA. 286+00

SCALE: 1"=120' SHEET 12 OF 14

DESIGN	FED.RD. DIV.NO.	STATE PROJECT NO.		HIGHWAY NO.
SHM	6	SEE TITLE SHEET		SH 289
GRAPHICS	STATE	DISTRICT	COUNTY	SHEET NO.
OE	TEXAS	DALLAS	COLLIN	
CHECK	CONTROL	SECTION	JOB	194
SM	0091	03	301	
CHECK				

P-201107-01

$FILEABBREV$

12/29/2011
T:\DALDGN\S\SH289\Design\sheets\DRNG\Interior\Drainage\Area\Map\289\Interior\12.dgn

TXDOT
120.0000 ft / IN.

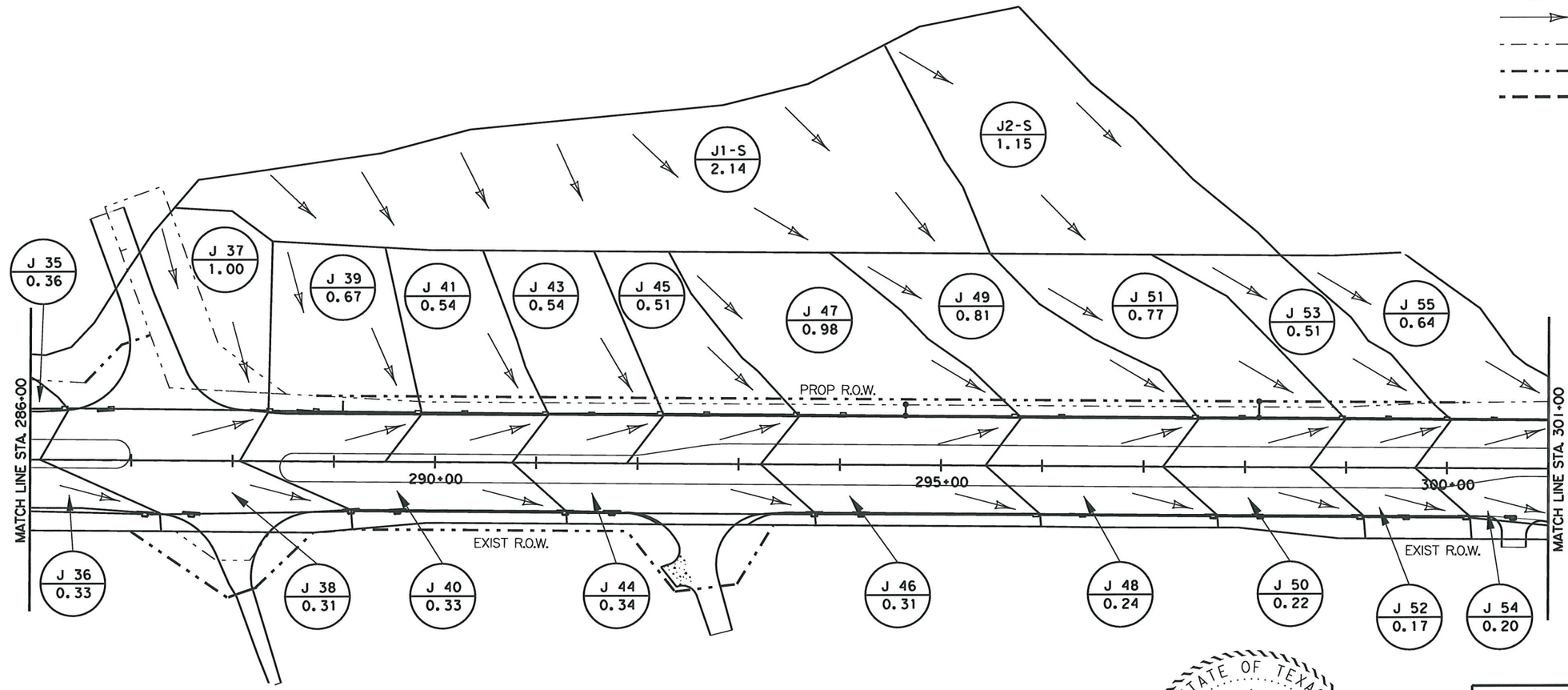

0 60 120
SCALE IN FEET

LEGEND

- DRAINAGE BOUNDRY
- XX / X.XX — AREA NAME / DRAINAGE AREA (Acre)
- FLOW DIRECTION
- EXISTING R.O.W
- PROPOSED R.O.W
- STUB-OUT SUBAREAS

STATE OF TEXAS
HASSAN SAM MOGHADASSI
84231
LICENSED
PROFESSIONAL ENGINEER

H. Moghadassi , P.E. 7/12/11
Signature of Registrant & Date

289*Interior*13.dgn

Texas Department of Transportation
© 2011

SH 289
FM 455 TO N BUS 289C
INTERIOR DRAINAGE AREA MAP
STA. 286+00 TO STA. 301+00

SCALE: 1"=120' SHEET 13 OF 14

DESIGN	FED. RD. DIV. NO.	STATE PROJECT NO.		HIGHWAY NO.
SHM	6	SEE TITLE SHEET		SH 289
GRAPHICS	STATE	DISTRICT	COUNTY	SHEET NO.
OE	TEXAS	DALLAS	COLLIN	195
CHECK	CONTROL	SECTION	JOB	
SM	0091	03	P-201107-01	
CHECK				

7/11/2011
t:\dalgn*s\sh289\design\sheets\DRNG\Interior*Drainage*Area*Map\289*Interior*13.dgn
...\289*Interior*13.dgn

TXDOT
120.0000 ft / IN.

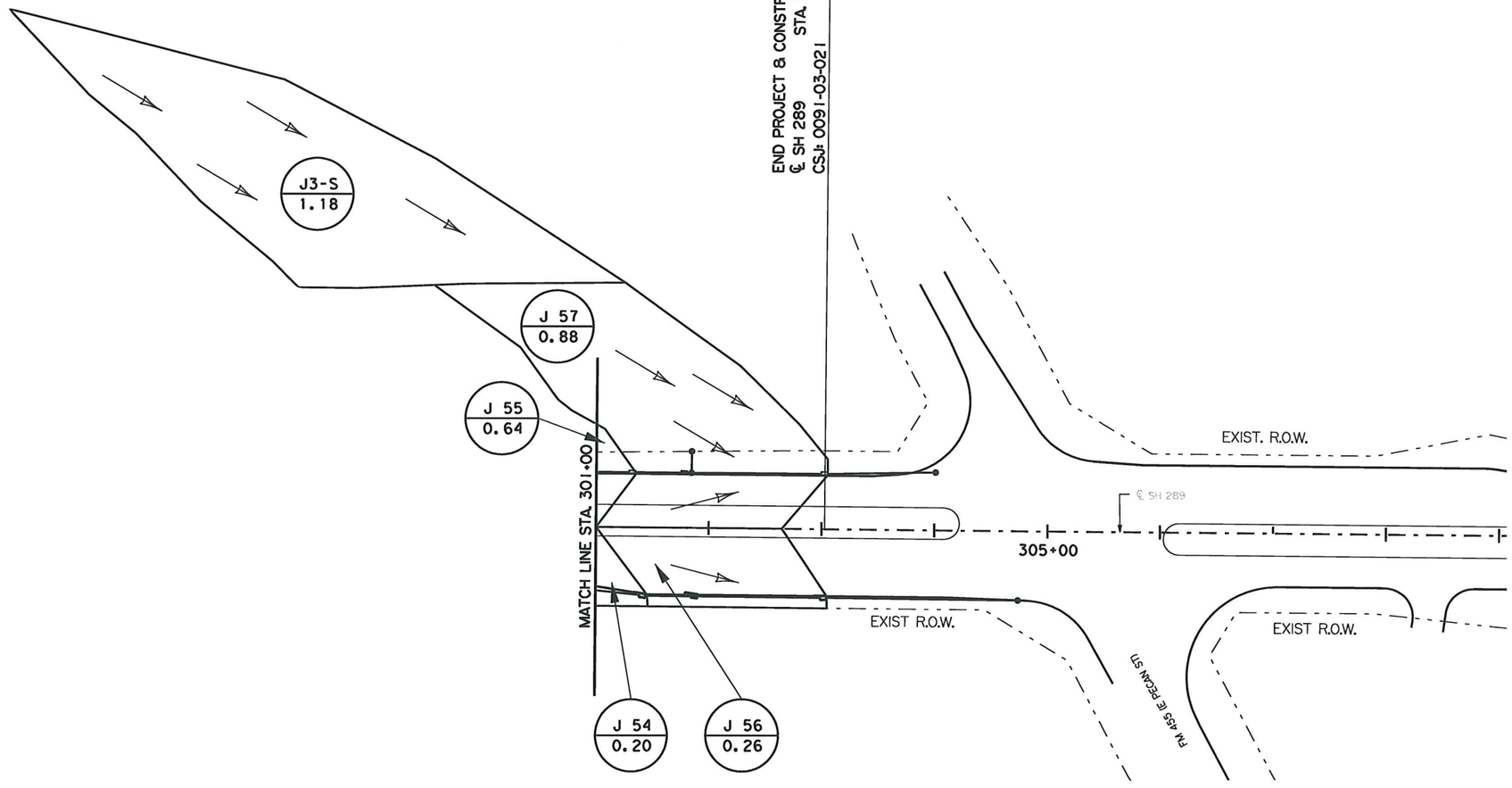

LEGEND

- DRAINAGE BOUNDRY
- XX / X.XX — AREA NAME / DRAINAGE AREA (Acre)
- FLOW DIRECTION
- EXISTING R.O.W
- PROPOSED R.O.W
- STUB-OUT SUBAREAS

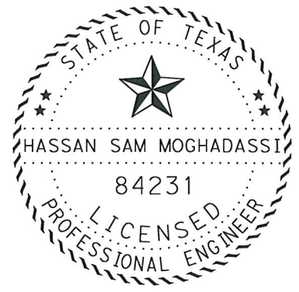

H. Moghadassi , P.E. 7/12/11
Signature of Registrant & Date

289*Interior*14.dgn

Texas Department of Transportation
© 2011

SH 289

FM 455 TO N BUS 289C

INTERIOR DRAINAGE AREA MAP

STA. 301+00 TO END CONSTRUCTION

SCALE: 1"=120' SHEET 14 OF 14

DESIGN	FED. RD. DIV. NO.	STATE PROJECT NO.		HIGHWAY NO.
SHM	6	SEE TITLE SHEET		SH 289
GRAPHICS	STATE	DISTRICT	COUNTY	SHEET NO.
OE	TEXAS	DALLAS	COLLIN	
CHECK	CONTROL	SECTION	JOB	196
SM	0091	03	020	
CHECK				P-201107-01

7/11/2011
t:\dal\dgn\s\sh289\design\sheets\DRNG\Interior*Drainage*Area*Map\289*Interior*14.dgn
...\289*Interior*14.dgn

RUNOFF COMPUTATIONS - INLET

DRAINAGE AREA		UNDEVELOPED						TC (MIN)		I5	Q5	COMMENT
INLET ID.	(Ac)	ACRES DRAINED C=0.9	C=0.85	C=0.35	Wtd C	Total CA		CALCULATED	USED IN DES.	IN/HR	CFS	
			LINE A									
A2-I	1.51	0.19		1.32	0.42	0.63		7.88	10.00	6.78	4.29	
A3-I	2.11	0.15		1.96	0.39	0.82		0.91	10.00	6.78	5.57	**
A4-I	2.08	0.15		1.93	0.39	0.81		0.92	10.00	6.78	5.50	**
A5-I	1.78	0.13		1.65	0.39	0.69		0.80	10.00	6.78	4.71	**
A6-I	1.59	0.13		1.46	0.39	0.63		0.66	10.00	6.78	4.26	**
A7-I	1.73	0.13		1.60	0.39	0.68		0.58	10.00	6.78	4.59	**
A8-I	1.79	0.11		1.68	0.38	0.69		0.58	10.00	6.78	4.66	**
A9-I	2.16	0.11		2.05	0.38	0.82		0.57	10.00	6.78	5.54	**
			LINE D									
			LINE E									
E2	0.83	0.19		0.64	0.48	0.40		2.10	10.00	6.78	2.68	
E3	1.04	0.17		0.87	0.44	0.46		2.95	10.00	6.78	3.11	
E8	0.81	0.16		0.64	0.46	0.37		2.97	10.00	6.78	2.53	
			LINE H									
			LINE I									

DRAINAGE AREA		DEVELOPED*					TC (MIN)		I5	Q5	COMMENT
INLET ID.	(Ac)	ACRES DRAINED C=0.9	C=0.85	C=0.35	Wtd C	Total CA	CALCULATED	USED IN DES.	IN/HR	CFS	
			LINE A								
A1-I	0.313	0.18	0.13		0.88	0.50	0.87	10.00	6.78	1.86	**
A2-I	0.80	0.19	0.61		0.86	0.69	0.91	10.00	6.78	4.64	**
A3-I	0.91	0.15	0.76		0.86	0.78	0.91	10.00	6.78	5.30	
A4-I	0.84	0.15	0.69		0.86	0.72	0.92	10.00	6.78	4.89	
A5-I	0.72	0.13	0.59		0.86	0.62	0.80	10.00	6.78	4.19	
A6-I	0.71	0.13	0.58		0.86	0.61	0.66	10.00	6.78	4.14	
A7-I	0.72	0.13	0.59		0.86	0.62	0.58	10.00	6.78	4.19	
A8-I	0.57	0.11	0.46		0.86	0.49	0.58	10.00	6.78	3.32	
A9-I	0.60	0.11	0.49		0.86	0.52	0.57	10.00	6.78	3.50	
A10	0.17	0.17			0.90	0.15	2.70	10.00	6.78	1.05	**
A11	0.23	0.23			0.90	0.21	1.50	10.00	6.78	1.40	**
A12	0.18	0.18			0.90	0.16	1.50	10.00	6.78	1.08	**
A13	0.13	0.12			0.90	0.12	0.68	10.00	6.78	0.78	**
A14	0.25	0.20			0.90	0.23	1.16	10.00	6.78	1.53	**
A15	0.19	0.16			0.90	0.17	1.16	10.00	6.78	1.16	**
A16	0.18	0.16			0.90	0.16	1.20	10.00	6.78	1.11	**
A17	0.16	0.13			0.90	0.14	1.20	10.00	6.78	0.95	**
A18	0.10	0.10			0.90	0.09	0.90	10.00	6.78	0.61	**
			LINE D								
DN-DI1	1.29		1.29		0.85	1.10	4.28	10.00	6.78	7.47	**
DN 1	0.32	0.32			0.90	0.29	4.06	10.00	6.78	1.95	**
DN 2	0.31	0.31			0.90	0.28	3.88	10.00	6.78	1.89	**
DN 3	0.19	0.19			0.90	0.17	3.28	10.00	6.78	1.16	**
DN 4	0.19	0.19			0.90	0.17	3.15	10.00	6.78	1.16	**
DN 5	0.19	0.19			0.90	0.17	3.30	10.00	6.78	1.16	**
DN 6	0.19	0.19			0.90	0.17	3.16	10.00	6.78	1.16	**
DN 8	0.39	0.39			0.90	0.35	3.23	10.00	6.78	2.38	**
DS1	0.38	0.38			0.90	0.34	3.22	10.00	6.78	2.32	**
DS2	0.63	0.54	0.06		0.89	0.56	4.00	10.00	6.78	3.82	**
DS3	0.63	0.53	0.06		0.89	0.56	4.00	10.00	6.78	3.82	**
DS4	0.25	0.21	0.04		0.89	0.22	3.49	10.00	6.78	1.51	**
DS5	0.25	0.21	0.04		0.89	0.22	3.63	10.00	6.78	1.51	**
DS6	0.37	0.32	0.05		0.89	0.33	4.68	10.00	6.78	2.24	**
DS7	0.38	0.33	0.05		0.89	0.34	4.77	10.00	6.78	2.30	**
			LINE E								
E1	0.39	0.21	0.18		0.88	0.34	3.92	10.00	6.78	2.27	**
E2	0.73	0.19	0.54		0.86	0.63	2.03	10.00	6.78	4.23	**
E3	0.86	0.17	0.69		0.86	0.74	2.05	10.00	6.78	4.96	**
E4	0.64	0.16	0.47		0.86	0.55	1.89	10.00	6.78	3.71	**
E5	0.64	0.16	0.48		0.86	0.55	2.08	10.00	6.78	3.72	**
E6	0.78	0.16	0.61		0.86	0.67	2.08	10.00	6.78	4.5	**
E7	0.72	0.16	0.56		0.86	0.62	1.98	10.00	6.78	4.2	**
E8	0.80	0.16	0.64		0.86	0.69	1.92	10.00	6.78	4.69	**
E9GI	0.11		0.11		0.85	0.09	1.82	10.00	6.78	0.62	**
E10	0.18	0.18			0.90	0.15	2.12	10.00	6.78	1.07	**
E11	0.19	0.19			0.90	0.15	2.15	10.00	6.78	1.19	**
E12	0.27	0.27			0.90	0.24	2.61	10.00	6.78	1.64	**
E13	0.23	0.23			0.90	0.21	3.02	10.00	6.78	1.4	**
E14	0.20	0.20			0.90	0.18	2.47	10.00	6.78	1.19	**
E15	0.19	0.19			0.90	0.17	2.47	10.00	6.78	1.18	**
E16	0.19	0.19			0.90	0.17	2.38	10.00	6.78	1.17	**
E17	0.19	0.19			0.90	0.17	2.17	10.00	6.78	1.18	**
E18	0.20	0.20			0.90	0.18	2.14	10.00	6.78	1.19	**
E19	0.19	0.19			0.90	0.17	2.14	10.00	6.78	1.17	**
E20	0.19	0.19			0.90	0.17	2.15	10.00	6.78	1.18	**
E21	0.20	0.20			0.90	0.18	2.31	10.00	6.78	1.19	**
			LINE H								
H1	0.19	0.19			0.90	0.17	2.81	10.00	6.78	1.16	**
H2	0.16	0.16			0.90	0.14	2.48	10.00	6.78	0.98	**
H3	0.18	0.18			0.90	0.16	2.64	10.00	6.78	1.10	**
H4	0.17	0.17			0.90	0.15	2.72	10.00	6.78	1.04	**
			LINE I								
I 1	0.34	0.23	0.11		0.88	0.30	1.42	10.00	6.78	2.03	**
I 1A	0.19	0.19			0.90	0.17	1.06	10.00	6.78	1.16	**
I 1B	0.22	0.22			0.90	0.20	1.17	10.00	6.78	1.34	**
I 2	0.29	0.22	0.07		0.89	0.26	1.36	10.00	6.78	1.75	**
I 2A	0.19	0.19			0.90	0.17	1.36	10.00	6.78	1.16	**
I 2B	0.24	0.24			0.90	0.22	1.31	10.00	6.78	1.46	**
I 3	0.33	0.22	0.11		0.88	0.29	1.55	10.00	6.78	1.99	**
I 4	0.32	0.22	0.10		0.88	0.28	1.60	10.00	6.78	1.91	**
I 5	0.42	0.29	0.13		0.88	0.37	1.73	10.00	6.78	2.51	**
I 6	0.43	0.15	0.28		0.87	0.37	1.75	10.00	6.78	2.52	**
I 7	0.42	0.26	0.16		0.88	0.37	2.28	10.00	6.78	2.52	**
I 8	0.51	0.26	0.25		0.88	0.44	2.29	10.00	6.78	3.00	**
I 9	0.26	0.15	0.11		0.88	0.22	2.46	10.00	6.78	1.52	**
I 10	0.22	0.15	0.07		0.88	0.19	1.31	10.00	6.78	1.31	**

NOTE: ALL INLETS AND STORM DRAIN PIPES FOR THIS SYSTEM ARE DESIGNED FOR 5 YR FREQUENCY PER TxDOT'S CRITERIA.

ANY ADDITIONAL RUNOFF RESULTING FROM FUTURE DEVELOPMENTS WILL DISCHARGE DIRECTLY AND TIE INTO THE STUB-OUTS IN THE SYSTEM.

* DEVELOPED- PROPOSED RDWY PLUS 150' STRIP FROM THE ROW FOR FUTURE DEVELOPMENTS

** USED IN INLET DESIGN

TYPE OF C-VALUES

PAV. C=0.9

DEVELOPED C=0.85

UNDEVELOPED C=0.35

STATE OF TEXAS
HASSAN SAM MOGHADASSI
84231
LICENSED PROFESSIONAL ENGINEER

H. Moghadassi, P.E. 7/12/11
Signature of Registrant & Date

Texas Department of Transportation
© 2011

SH 289
RUNOFF COMPUTATION

SHEET 1 OF 11

DESIGN	FED.RD. DIV.NO.	STATE PROJECT NO.		HIGHWAY NO.
SHM	6	SEE TITLE SHEET		SH 289
GRAPHICS TA	STATE	DISTRICT	COUNTY	SHEET NO.
CHECK SHM	TEXAS	DALLAS	COLLIN	197
CHECK	CONTROL	SECTION	JOB	
	0091	03	021	

P-201107-01

RUNOFF COMPUTATIONS - INLET

DRAINAGE AREA		UNDEVELOPED					TC (MIN)		I5	Q5	COMMENT
INLET ID.	(Ac)	ACRES DRAINED C=0.9	C=0.85	C=0.35	Wtd C	Total CA	CALCULATED	USED IN DES.	IN/HR	CFS	
			LINE J								
J 37	1.07	0.41		0.66	0.56	0.60	3.11	10.00	6.78	4.07	
J 39	0.84	0.16		0.68	0.45	0.38	3.52	10.00	6.78	2.59	
J 41	0.79	0.14		0.65	0.45	0.35	3.84	10.00	6.78	2.40	
J 43	0.83	0.12		0.71	0.43	0.36	4.02	10.00	6.78	2.42	
J 45	0.74	0.15		0.59	0.46	0.34	4.26	10.00	6.78	2.32	
J 47	1.47	0.24		1.23	0.44	0.65	2.85	10.00	6.78	4.38	
J 49	1.47	0.19		1.28	0.42	0.62	3.10	10.00	6.78	4.20	
J 51	1.60	0.16		1.44	0.41	0.65	3.70	10.00	6.78	4.39	
J 53	0.83	0.12		0.71	0.43	0.36	3.69	10.00	6.78	2.42	
J 55	1.15	0.14		1.01	0.42	0.48	4.05	10.00	6.78	3.25	
J 57	1.55	0.19		1.36	0.42	0.65	4.54	10.00	6.78	4.39	
			LINE C								
C2-I	0.60	0.14		0.46	0.48	0.29	1.85	10.00	6.78	1.95	
C6-E	1.19	0.63		0.56	0.64	0.76	4.44	10.00	6.78	5.18	**
C7-I	1.39	0.17		1.22	0.42	0.58	1.02	10.00	6.78	3.94	

DRAINAGE AREA		DEVELOPED*					TC (MIN)		I5	Q5	COMMENT
INLET ID.	(Ac)	ACRES DRAINED C=0.9	C=0.85	C=0.35	Wtd C	Total CA	CALCULATED	USED IN DES.	IN/HR	CFS	
		LINE J									
J 1	0.27	0.16	0.11		0.88	0.24	2.52	10.00	6.78	1.61	**
J 2	0.16	0.15	0.01		0.90	0.14	2.60	10.00	6.78	0.97	**
J 3	0.29	0.15	0.14		0.88	0.25	2.87	10.00	6.78	1.72	**
J 4	0.17	0.15	0.03		0.89	0.15	2.94	10.00	6.78	1.03	**
J 5	0.3	0.15	0.15		0.88	0.26	3.00	10.00	6.78	1.78	**
J 6	0.16	0.13	0.03		0.89	0.14	2.69	10.00	6.78	0.97	**
J 7	0.36	0.2	0.16		0.88	0.32	3.56	10.00	6.78	2.14	**
J 8	0.28	0.23	0.06		0.89	0.25	3.92	10.00	6.78	1.69	**
J 9	0.24	0.22	0.03		0.89	0.21	3.69	10.00	6.78	1.45	**
J 10	0.19	0.19	0		0.90	0.17	3.59	10.00	6.78	1.16	**
J 11	0.17	0.17	0		0.90	0.15	3.40	10.00	6.78	1.04	**
J 13	0.25	0.14	0.11		0.88	0.22	3.59	10.00	6.78	1.49	**
J 14	0.31	0.31	0		0.90	0.28	4.58	10.00	6.78	1.89	**
J 15	0.39	0.26	0.13		0.88	0.34	3.88	10.00	6.78	2.34	**
J 17	0.25	0.11	0.15		0.87	0.22	3.13	10.00	6.78	1.48	**
J 18	0.25	0.25	0		0.90	0.23	4.14	10.00	6.78	1.53	**
J 19	0.29	0.16	0.13		0.88	0.25	3.37	10.00	6.78	1.73	**
J 20	0.24	0.18	0.06		0.89	0.21	3.36	10.00	6.78	1.44	**
J 21	0.25	0.16	0.09		0.88	0.22	3.09	10.00	6.78	1.49	**
J 22	0.23	0.16	0.07		0.88	0.20	3.12	10.00	6.78	1.38	**
J 23	0.17	0.11	0.06		0.88	0.15	2.46	10.00	6.78	1.02	**
J 24	0.16	0.11	0.05		0.88	0.14	2.52	10.00	6.78	0.96	**
J 25	0.21	0.16	0.06		0.89	0.19	2.64	10.00	6.78	1.26	**
J 26	0.2	0.13	0.06		0.88	0.18	2.76	10.00	6.78	1.20	**
J 27	0.42	0.2	0.22		0.87	0.37	3.13	10.00	6.78	2.49	**
J 28	0.25	0.17	0.08		0.88	0.22	3.01	10.00	6.78	1.50	**
J 29	0.82	0.35	0.47		0.87	0.71	3.14	10.00	6.78	4.84	**
J 30	0.29	0.22	0.07		0.89	0.26	2.97	10.00	6.78	1.75	**
J 31	0.82	0.2	0.63		0.86	0.71	3.12	10.00	6.78	4.79	**
J 32	0.32	0.22	0.1		0.88	0.28	2.95	10.00	6.78	1.92	**
J 33	0.64	0.21	0.43		0.87	0.55	2.93	10.00	6.78	3.76	**
J 34	0.3	0.21	0.1		0.88	0.27	2.77	10.00	6.78	1.80	**
J 35	0.36	0.19	0.17		0.88	0.32	2.31	10.00	6.78	2.14	**
J 36	0.33	0.22	0.12		0.88	0.29	2.94	10.00	6.78	1.97	**
J 37	1	0.41	0.59		0.87	0.87	2.50	10.00	6.78	5.90	**
J 38	0.31	0.27	0.04		0.89	0.28	3.03	10.00	6.78	1.88	**
J 39	0.67	0.16	0.51		0.86	0.58	2.81	10.00	6.78	3.92	**
J 40	0.33	0.26	0.07		0.89	0.29	3.16	10.00	6.78	1.99	**
J 41	0.54	0.14	0.41		0.86	0.47	2.97	10.00	6.78	3.16	**
J 43	0.54	0.12	0.42		0.86	0.47	3.03	10.00	6.78	3.15	**
J 44	0.34	0.3	0.04		0.89	0.30	2.98	10.00	6.78	2.06	**
J 45	0.51	0.15	0.36		0.86	0.44	3.06	10.00	6.78	2.99	**
J 46	0.31	0.24	0.06		0.89	0.28	2.98	10.00	6.78	1.87	**
J 47	0.98	0.24	0.74		0.86	0.85	3.84	10.00	6.78	5.73	**
J 48	0.24	0.19	0.05		0.89	0.21	2.70	10.00	6.78	1.45	**
J 49	0.81	0.19	0.61		0.86	0.70	3.99	10.00	6.78	4.73	**
J 50	0.22	0.16	0.06		0.89	0.20	2.54	10.00	6.78	1.32	**
J 51	0.77	0.16	0.61		0.86	0.66	3.99	10.00	6.78	4.49	**
J 52	0.17	0.12	0.05		0.89	0.15	2.27	10.00	6.78	1.02	**
J 53	0.51	0.12	0.39		0.86	0.44	3.61	10.00	6.78	2.98	**
J 54	0.2	0.16	0.04		0.89	0.18	2.36	10.00	6.78	1.21	**
J 55	0.64	0.14	0.5		0.86	0.55	3.32	10.00	6.78	3.74	**
J 56	0.26	0.22	0.04		0.89	0.23	2.14	10.00	6.78	1.57	**
J 57	0.88	0.19	0.69		0.86	0.76	3.05	10.00	6.78	5.14	**
		LINE C									
C1-I	0.56	0.38	0.18		0.88	0.50	1.20	10.00	6.78	3.36	**
C2-I	0.6	0.15	0.46		0.86	0.52	3.19	10.00	6.78	3.50	**
C3-I	0.56	0.18	0.38		0.87	0.49	1.56	10.00	6.78	3.31	**
C4-I	0.49	0.18	0.31		0.87	0.43	1.23	10.00	6.78	2.89	**
C5-I	0.2	0.17	0.03		0.89	0.18	0.97	10.00	6.78	1.20	**
C5-E	2.96		2.96		0.85	2.52	5.30	10.00	6.78	17.03	**/***
C6-E	0.55	0.35	0.21		0.88	0.48	1.57	10.00	6.78	3.29	
C7-I	0.74	0.17	0.57		0.86	0.64	1.15	10.00	6.78	4.33	**
C8-I	0.71	0.23	0.48		0.87	0.61	1.04	10.00	6.78	4.15	**
C9-I	0.59	0.35	0.24		0.88	0.52	2.16	10.00	6.78	3.51	**
C10-I	0.68	0.68			0.90	0.61	1.96	10.00	6.78	4.12	**
C10a-E	2.08		2.08		0.85	1.77	1.80	10.00	6.78	11.96	**
C11-I	0.25	0.25			0.90	0.22	1.26	10.00	6.78	1.52	
C12	0.29	0.19	0.1		0.88	0.25	1.22	10.00	6.78	1.71	**
C13	0.25	0.13	0.11		0.88	0.22	0.83	10.00	6.78	1.46	**
C14	0.24	0.13	0.11		0.88	0.21	0.86	10.00	6.78	1.45	**
C15	0.25	0.14	0.11		0.88	0.22	0.97	10.00	6.78	1.47	**
C16	0.13	0.1	0.03		0.89	0.12	0.71	10.00	6.78	0.79	**
C17	0.28	0.28			0.90	0.25	1.24	10.00	6.78	1.68	**
C18	0.33	0.33			0.90	0.30	1.4	10.00	6.78	2.01	**
C19	0.32	0.32			0.90	0.29	1.47	10.00	6.78	1.97	**
C20	0.18	0.18			0.90	0.16	0.88	10.00	6.78	1.07	**
C21	0.68	0.68			0.90	0.61	1.96	10.00	6.78	4.12	**
C22	0.25	0.25			0.90	0.22	1.26	10.00	6.78	1.52	**

NOTE: ALL INLETS AND STORM DRAIN PIPES FOR THIS SYSTEM ARE DESIGNED FOR 5 YR FREQUENCY PER TxDOT'S CRITERIA.

ANY ADDITIONAL RUNOFF RESULTING FROM FUTURE DEVELOPMENTS WILL DISCHARGE DIRECTLY AND TIE INTO THE STUB-OUTS IN THE SYSTEM.

* DEVELOPED- PROPOSED RDWY PLUS 150' STRIP FROM THE ROW FOR FUTURE DEVELOPMENTS
** USED IN INLET DESIGN

*** GRATE INLET C5-E DESIGN CAPACITY IS THE PROPOSED DISCHARGE FROM THE CELINA HIGH SCHOOL THAT DRAINS TO DETENTION POND-2. THE PROPOSED DISCHARGE FOR THE CELINA HIGH SCHOOL DETENTION POND-2 WAS OBTAINED FROM CELINA HIGH SCHOOL PROJECT NUMBER RLK 06076 SHEET C12a OF 32 APPROVED FOR CONSTRUCTION ON 04/03/07.

GRATE INLET C5-E DESIGN CAPACITY >
CELINA HIGH SCHOOL PROPOSED DISCHARGE TO POND-2 =
73.64 CFS > 72.90 CFS
THIS WILL ONLY OCCUR IF POND IS NOT FUCTIONING CORRECTLY
OTHERWISE THE DISCHARGE TO INLET C5-E WILL BE,
DRAINAGE AREA C5-E + POND-2 MAX. 5 YEAR RELEASE
=17.03 CFS+14.2 CFS
=31.23 CFS

TYPE OF C-VALUES
PAV. C=0.9
DEVELOPED C=0.85
UNDEVELOPED C=0.35

STATE OF TEXAS
HASSAN SAM MOGHADASSI
84231
LICENSED
PROFESSIONAL ENGINEER

H. Moghadassi, P.E. 7/12/11
Signature of Registrant & Date

STATE OF TEXAS
CHRISTOPHER P. ROCHA
107690
LICENSED
PROFESSIONAL ENGINEER

Chris Rocha, P.E. 7/13/11
Signature of Registrant & Date

Texas Department of Transportation
© 2011

SH 289
RUNOFF COMPUTATION

SHEET 2 OF 11

DESIGN	FED.RD. DIV.NO.	STATE PROJECT NO.		HIGHWAY NO.
SHM	6	SEE TITLE SHEET		SH 289
GRAPHICS	STATE	DISTRICT	COUNTY	SHEET NO.
TA	TEXAS	DALLAS	COLLIN	
CHECK	CONTROL	SECTION	JOB	198
SHM	0091	03	021	
CHECK				

P-201107-01

RUNOFF COMPUTATIONS - INLET

DRAINAGE AREA		UNDEVELOPED					TC (MIN)		I5	Q5	DRAINAGE AREA		DEVELOPED*					TC (MIN)		I5	Q5**	COMMENT
INLET ID.	(Ac)	ACRES DRAINED C=0.9	C=0.85	C=0.35	Wtd C	Total CA	CALCULATED	USED IN DES.	IN/HR	CFS	INLET ID.	(Ac)	ACRES DRAINED C=0.9	C=0.85	C=0.35	Wtd C	Total CA	CALCULATED	USED IN DES.	IN/HR	CFS	
			LINE B											LINE B								
											B-Drop	2.92	0.29	2.63		0.86	2.49	1.18	10.00	6.78	16.90	***
											B-Drop2											***
											B-Drop3											***
											B1-I	0.39	0.32	0.06		0.89	0.34	1.18	10.00	6.78	2.33	**
											B2-I	0.39	0.34	0.05		0.89	0.35	1.18	10.00	6.78	2.34	**
											B3-I	0.35	0.29	0.06		0.89	0.31	1.18	10.00	6.78	2.11	**
											B4-I	0.32	0.29	0.03		0.90	0.29	1.18	10.00	6.78	1.94	**
			LINE F											LINE F								
FGINLT	1.27			1.27	0.35	0.44	2.19	10.00	6.78	2.98**	FGINLT	1.01		1.01		0.85	0.86	2.19	10	6.78	2.29	
											F1	0.90	0.90			0.90	0.08	3.21	10	6.78	0.70	**
											F2	0.16	0.16			0.90	0.12	3.40	10	6.78	0.95	**
											F3	0.15	0.15			0.90	0.12	2.87	10	6.78	0.92	**
											F4	0.12	0.12			0.90	0.10	3.18	10	6.78	0.71	**
											F5	0.16	0.16			0.90	0.14	3.47	10	6.78	0.95	**
											F6	0.15	0.15			0.90	0.14	2.87	10	6.78	0.93	**
			LINE G											LINE G								
											GN1A-I	0.20	0.20			0.90	0.14	2.29	10	6.78	1.20	**
											GN1-I	0.16	0.16			0.90	0.12	0.99	10	6.78	0.96	**
											GN2-I	0.15	0.15			0.90	0.11	1.18	10	6.78	0.93	**
											GN3-I	0.15	0.15			0.90	0.12	1.18	10	6.78	0.90	**
GN4-I	0.51	0.13		0.38	0.49	0.25	2.88	10	6.78	1.70	GN4-I	0.51	0.13	0.38		0.86	0.44	3.63	10	6.78	2.97	**
GN5-I	0.59	0.13		0.46	0.47	0.28	3.76	10	6.78	1.90	GN5-I	0.59	0.13	0.46		0.86	0.51	0.82	10	6.78	3.46	**
GN6-I	0.62	0.13		0.49	0.46	0.29	3.66	10	6.78	1.97	GN6-I	0.62	0.13	0.49		0.86	0.55	0.99	10	6.78	3.63	**
GN7-I	0.70	0.13		0.57	0.45	0.32	4.11	10	6.78	2.17	GN7-I	0.70	0.13	0.57		0.86	0.60	1.34	10	6.78	4.07	**
GN8-I	0.79	0.13		0.57	0.44	0.35	4.43	10	6.78	2.37	GN8-I	0.70	0.13	0.57		0.86	0.60	1.24	10	6.78	4.09	**
GN9-I	0.83	0.13		0.57	0.43	0.36	4.81	10	6.78	2.44	GN9-I	0.70	0.13	0.57		0.86	0.60	1.85	10	6.78	4.06	**
GN10-I	0.80	0.13		0.56	0.44	0.35	4.93	10	6.78	2.37	GN10-I	0.67	0.13	0.54		0.86	0.58	1.82	10	6.78	3.90	**
GN11-I	0.72	0.14		0.51	0.46	0.33	4.78	10	6.78	2.24	GN11-I	0.65	0.14	0.51		0.86	0.56	0.98	10	6.78	3.77	**
GN12-I	0.70	0.14		0.56	0.47	0.32	4.50	10	6.78	2.17	GN12-I	0.70	0.14	0.56		0.86	0.60	1.48	10	6.78	4.06	**
GN13-I	0.70	0.15		0.55	0.47	0.33	4.61	10	6.78	2.24	GN13-I	0.71	0.16	0.55		0.86	0.61	1.48	10	6.78	4.10	**
											GN14-I	0.13	0.13			0.90	0.12	1.09	10	6.78	0.81	**
											GN14A-I	0.23	0.23			0.90	0.21	2.27	10	6.78	1.39	**
											GN15-I	0.18	0.18			0.90	0.16	1.13	10	6.78	1.08	**
											GN16-I	0.16	0.16			0.90	0.14	1.30	10	6.78	0.94	**
											GN17-I	0.16	0.16			0.90	0.14	1.18	10	6.78	0.94	**
											GN18-I	0.16	0.16			0.90	0.14	1.10	10	6.78	0.94	**
											GN19-I	0.16	0.16			0.90	0.14	0.87	10	6.78	0.95	**
											GN20-I	0.16	0.16			0.90	0.14	0.77	10	6.78	0.95	**
											GN21-I	0.16	0.16			0.90	0.14	0.74	10	6.78	0.94	**
											GN22-I	0.16	0.16			0.90	0.14	0.73	10	6.78	0.97	**
											GN23-I	0.16	0.16			0.90	0.14	0.73	10	6.78	0.96	**
											GN24-I	0.14	0.14			0.90	0.13	0.67	10	6.78	0.86	**
											GN25-I	0.20	0.20			0.90	0.18	0.75	10	6.78	1.19	**
											GN26-I	0.18	0.18			0.90	0.16	0.74	10	6.78	1.11	**
											GN27	0.28	0.28			0.90	0.25	2.34	10	6.78	1.70	**
											GN27A	0.29	0.29			0.90	0.21	2.24	10	6.78	1.74	**
											GS29-I	0.40	0.40			0.90	0.30	2.89	10	6.78	2.42	**
											GS30-I	0.19	0.19			0.90	0.15	0.90	10	6.78	1.18	**
											GS31-I	0.19	0.19			0.90	0.15	0.76	10	6.78	1.18	**
											GS32-I	0.19	0.19			0.90	0.15	0.76	10	6.78	1.18	**
											GS33-I	0.19	0.19			0.90	0.15	0.75	10	6.78	1.18	**
											GS34-I	0.19	0.19			0.90	0.15	0.75	10	6.78	1.18	**
											GS35-I	0.16	0.16			0.90	0.15	0.76	10	6.78	0.99	**
											GS36-I	0.19	0.19			0.90	0.15	0.79	10	6.78	1.18	**
											GS37-I	0.19	0.19			0.90	0.15	0.99	10	6.78	1.18	**
											GS38-I	0.41	0.41			0.90	0.33	1.55	10	6.78	2.50	**
											GS39-I	0.40	0.40			0.90	0.15	2.90	10	6.78	2.43	**
											GS40-I	0.19	0.19			0.90	0.17	0.99	10	6.78	1.17	**
											GS41-I	0.19	0.19			0.90	0.17	0.76	10	6.78	1.18	**
											GS42-I	0.19	0.19			0.90	0.17	0.76	10	6.78	1.18	**
											GS43-I	0.19	0.19			0.90	0.17	0.76	10	6.78	1.18	**
											GS44-I	0.19	0.19			0.90	0.17	0.75	10	6.78	1.18	**
											GS45-I	0.19	0.19			0.90	0.17	0.76	10	6.78	1.18	**
											GS46-I	0.19	0.19			0.90	0.17	0.79	10	6.78	1.18	**
											GS47-I	0.19	0.19			0.90	0.17	0.99	10	6.78	1.18	**
											GS48-I	0.41	0.41			0.90	0.37	1.55	10	6.78	2.50	**
											GS-DI1		4.62	4.62		0.85	3.93	5.66	10	6.78	26.62	**
											GS-DI2		0.41	0.41		0.85	0.35	4.04	10	6.78	2.34	**

NOTE: ALL INLETS AND STORM DRAIN PIPES FOR THIS SYSTEM ARE DESIGNED FOR 5 YR FREQUENCY PER TxDOT'S CRITERIA.

ANY ADDITIONAL RUNOFF RESULTING FROM FUTURE DEVELOPMENTS WILL DISCHARGE DIRECTLY AND TIE INTO THE STUB-OUTS IN THE SYSTEM.

* DEVELOPED- PROPOSED RDWY PLUS 150' STRIP FROM THE ROW FOR FUTURE DEVELOPMENTS
** USED IN INLET DESIGN

*** GRATE INLET B-DROP, B-DROP2, B-DROP3 TOTAL DESIGN CAPACITY TOGETHER IS THE 25 YEAR DISCHARGE FROM DRAINAGE AREA B, SEE 'DRAINAGE AREA & COMPUTATION' SHEET 179. THIS WILL ONLY OCCUR IF POND-1 FROM THE CELINA HIGH SCHOOL IS NOT FUCTIONING CORRECTLY OTHERWISE THE DISCHARGE SHOWN IS WHAT THE INLETS WILL DRAIN.

SCHOOL PROJECT NUMBER RLK 06076 SHEET C12a OF 32 APPROVED FOR CONSTRUCTION ON 04/03/07.

TYPE OF C-VALUES

PAV. C=0.9

DEVELOPED C=0.85

UNDEVELOPED C=0.35

STATE OF TEXAS
HASSAN SAM MOGHADASSI
84231
LICENSED
PROFESSIONAL ENGINEER

H. Moghadassi, P.E. 7/12/11
Signature of Registrant & Date

STATE OF TEXAS
CHRISTOPHER P. ROCHA
107690
LICENSED
PROFESSIONAL ENGINEER

Chris Rocha, P.E. 7/13/11
Signature of Registrant & Date

Texas Department of Transportation
© 2011

SH 289
RUNOFF COMPUTATION

SHEET 3 OF 11

DESIGN	FED.RD. DIV.NO.	STATE PROJECT NO.		HIGHWAY NO.
SHM	6	SEE TITLE SHEET		SH 289
GRAPHICS TA	STATE	DISTRICT	COUNTY	SHEET NO.
CHECK SHM	TEXAS	DALLAS	COLLIN	199
CHECK	CONTROL	SECTION	JOB	
	0091	03	021	

P-201107-01

RUNOFF COMPUTATIONS- TRUNK LINE & STUBS

TRUNK ID	DRAINAGE AREA No.	(Ac)	DEVELOPED ACRES DRAINED C=0.9	C=0.85	Wtd C	TOTAL CA	TC (MIN) USED TO DESIGN	I5 IN/HR	Q5 CFS	COMMENT
	A1-I	0.313	0.22	0.37	0.87	0.51	10.00	6.78	3.86	
	A2-I	0.80	0.18	0.61	0.86	0.68	10.00	6.78	5.19	
	A3-I	0.91	0.14	0.77	0.86	0.78	10.00	6.78	5.89	
	A4-I	0.84	0.14	0.69	0.86	0.71	10.00	6.78	5.41	
	A5-I	0.72	0.13	0.59	0.86	0.62	10.00	6.78	4.67	
	A6-I	0.71	0.13	0.58	0.86	0.61	10.00	6.78	4.63	
	A7-I	0.72	0.13	0.59	0.86	0.62	10.00	6.78	4.7	
	A8-I	0.57	0.1	0.47	0.86	0.49	10.00	6.78	3.7	
	A9-I	0.60	0.11	0.48	0.86	0.51	10.00	6.78	3.87	
LINE A	A10	0.17	0.17	0.17	0.90	0.15	10.00	6.78	1.18	
	A11	0.20	0.17	0.20	0.90	0.18	10.00	6.78	1.33	
	A12	0.14	0.17	0.14	0.90	0.13	10.00	6.78	0.98	
	A13	0.12	0.17	0.12	0.90	0.11	10.00	6.78	0.79	
	A14	0.20	0.17	0.20	0.90	0.18	10.00	6.78	1.37	
	A15	0.16	0.17	0.16	0.90	0.14	10.00	6.78	1.12	
	A16	0.16	0.17	0.16	0.90	0.14	10.00	6.78	1.11	
	A17	0.13	0.17	0.13	0.90	0.12	10.00	6.78	0.9	
	A18	0.10	0.17	0.10	0.90	0.09	10.00	6.78	0.69	
	A1-S	2.24	0.22	2.24	0.85	1.90	10.00	6.78	14.4	
	A2-S	3.18	0.18	3.18	0.85	2.70	10.00	6.78	20.47	
	A3-S	3.79	0.14	3.79	0.85	3.22	10.00	6.78	24.39	
	DN-DI1	1.29		1.29	0.85	1.10	10.00	6.78	7.47	
	DN 1	0.32	0.22		0.90	0.29	10.00	6.78	1.95	
	DN 2	0.31	0.22		0.90	0.28	10.00	6.78	1.89	
	DN 3	0.19	0.22		0.90	0.17	10.00	6.78	1.16	
	DN 4	0.19	0.22		0.90	0.17	10.00	6.78	1.16	
	DN 5	0.19	0.22		0.90	0.17	10.00	6.78	1.16	
	DN 6	0.19	0.22		0.90	0.17	10.00	6.78	1.16	
LINE D	DN 8	0.39	0.22		0.90	0.35	10.00	6.78	2.38	
	DS 1	0.38	0.22		0.90	0.34	10.00	6.78	2.32	
	DS 2	0.63	0.54	0.06	0.88	0.55	10.00	6.78	3.75	
	DS 3	0.63	0.53	0.06	0.88	0.55	10.00	6.78	3.75	
	DS 4	0.25	0.21	0.04	0.88	0.22	10.00	6.78	1.49	
	DS 5	0.25	0.21	0.04	0.88	0.22	10.00	6.78	1.49	
	DS 6	0.37	0.32	0.05	0.88	0.32	10.00	6.78	2.20	
	DS 7	0.38	0.33	0.05	0.88	0.33	10.00	6.78	2.26	
	E1	0.38	0.21	0.18	0.88	0.33	10.00	6.78	2.27	
	E2	0.72	0.19	0.54	0.86	0.62	10.00	6.78	4.23	
	E3	0.85	0.17	0.69	0.86	0.73	10.00	6.78	4.96	
	E4	0.64	0.16	0.47	0.86	0.55	10.00	6.78	3.71	
	E5	0.64	0.16	0.48	0.86	0.55	10.00	6.78	3.72	
	E6	0.77	0.16	0.61	0.86	0.66	10.00	6.78	4.5	
	E7	0.72	0.16	0.56	0.86	0.62	10.00	6.78	4.2	
	E8	0.80	0.16	0.64	0.86	0.69	10.00	6.78	4.69	
	E9GI	0.11		0.11	0.85	0.09	10.00	6.78	0.62	
	E10	0.16	0.16		0.90	0.15	10.00	6.78	0.99	
LINE E	E11	0.16	0.16		0.90	0.15	10.00	6.78	1	
	E12	0.27	0.27		0.90	0.24	10.00	6.78	1.64	
	E13	0.23	0.23		0.90	0.21	10.00	6.78	1.4	
	E14	0.20	0.20		0.90	0.18	10.00	6.78	1.19	
	E15	0.19	0.19		0.90	0.17	10.00	6.78	1.18	
	E16	0.19	0.19		0.90	0.17	10.00	6.78	1.17	
	E17	0.19	0.19		0.90	0.17	10.00	6.78	1.18	
	E18	0.20	0.20		0.90	0.18	10.00	6.78	1.19	
	E19	0.19	0.19		0.90	0.17	10.00	6.78	1.17	
	E20	0.19	0.19		0.90	0.17	10.00	6.78	1.18	
	E21	0.20	0.20		0.90	0.18	10.00	6.78	1.19	
	ESTUB	0.29		0.29	0.85	0.25	10.00	6.78	1.67	
	F1	0.09	0.09		0.90	0.08	10.00	6.78	0.59	
	F2	0.13	0.13		0.90	0.12	10.00	6.78	0.88	
	F3	0.13	0.13		0.90	0.12	10.00	6.78	0.88	
	F4	0.08	0.08		0.90	0.07	10.00	6.78	0.58	
LINE F	F5	0.13	0.13		0.90	0.12	10.00	6.78	0.88	
	F6	0.13	0.13		0.90	0.12	10.00	6.78	0.88	
	FSTUB	0.27		0.27	0.85	0.23	10.00	6.78	1.72	
	FGINLT	1.01		1.01	0.85	0.86	10.00	6.78	2.29	
	GN1-I	0.13	0.13		0.90	0.12	10.00	6.78	0.9	
	GN1A-I	0.16	0.16		0.90	0.14	10.00	6.78	1.08	
	GN2-I	0.13	0.13		0.90	0.12	10.00	6.78	0.87	
	GN3-I	0.13	0.13		0.90	0.12	10.00	6.78	0.89	
	GN4-I	0.51	0.13	0.38	0.86	0.44	10.00	6.78	3.32	
	GN5-I	0.59	0.13	0.47	0.88	0.52	10.00	6.78	3.87	
LINE G	GN6-I	0.62	0.13	0.50	0.87	0.54	10.00	6.78	4.06	
	GN7-I	0.70	0.13	0.57	0.86	0.60	10.00	6.78	4.55	
	GN8-I	0.70	0.13	0.57	0.86	0.60	10.00	6.78	4.58	
	GN9-I	0.70	0.13	0.57	0.86	0.60	10.00	6.78	4.55	
	GN10-I	0.67	0.13	0.54	0.86	0.58	10.00	6.78	4.37	

RUNOFF COMPUTATIONS- TRUNK LINE & STUBS

TRUNK ID	DRAINAGE AREA No.	(Ac)	DEVELOPED ACRES DRAINED C=0.9	C=0.85	Wtd C	TOTAL CA	TC (MIN) USED TO DESIGN	I5 IN/HR	Q5 CFS	COMMENT
	GN11-I	0.65	0.15	0.50	0.86	0.56	10.00	6.78	4.22	
	GN12-I	0.70	0.14	0.55	0.85	0.59	10.00	6.78	4.55	
	GN13-I	0.70	0.16	0.55	0.87	0.61	10.00	6.78	4.59	
	GN14-I	0.13	0.132		0.90	0.12	10.00	6.78	0.81	
	GN14A-	0.23	0.228		0.90	0.21	10.00	6.78	1.39	
	GN15-I	0.18	0.178		0.90	0.16	10.00	6.78	1.09	
	GN16-I	0.16	0.155		0.90	0.14	10.00	6.78	0.95	
	GN17-I	0.16	0.155		0.90	0.14	10.00	6.78	0.95	
	GN18-I	0.16	0.155		0.90	0.14	10.00	6.78	0.95	
	GN19-I	0.16	0.156		0.90	0.14	10.00	6.78	0.95	
	GN20-I	0.16	0.155		0.90	0.14	10.00	6.78	0.95	
	GN21-I	0.16	0.155		0.90	0.14	10.00	6.78	0.95	
	GN22-I	0.16	0.158		0.90	0.14	10.00	6.78	0.96	
LINE G	GN23-I	0.16	0.157		0.90	0.14	10.00	6.78	0.96	
	GN24-I	0.14	0.141		0.90	0.13	10.00	6.78	0.86	
	GN25-I	0.20	0.196		0.90	0.18	10.00	6.78	1.2	
	GN26-I	0.18	0.183		0.90	0.16	10.00	6.78	1.12	
	GN27	0.28	0.278		0.90	0.25	10.00	6.78	1.7	
	GN27A	0.23	0.23		0.90	0.21	10.00	6.78	1.59	
	GNSTB1	0.09		0.09	0.85	0.08	10.00	6.78	0.55	
	GNSTB2	0.30		0.30	0.85	0.26	10.00	6.78	1.91	
	GS29-I	0.33	0.33		0.90	0.30	10.00	6.78	2.28	
	GS30-I	0.16	0.16		0.90	0.14	10.00	6.78	1.11	
	GS31-I	0.16	0.16		0.90	0.14	10.00	6.78	1.11	
	GS32-I	0.16	0.16		0.90	0.14	10.00	6.78	1.11	
	GS33-I	0.16	0.16		0.90	0.14	10.00	6.78	1.12	
	GS34-I	0.16	0.16		0.90	0.14	10.00	6.78	1.11	
	GS35-I	0.16	0.16		0.90	0.14	10.00	6.78	1.11	
	GS36-I	0.16	0.16		0.90	0.14	10.00	6.78	1.11	
	GS37-I	0.16	0.16		0.90	0.14	10.00	6.78	1.11	
	GS38-I	0.36	0.36		0.90	0.32	10.00	6.78	2.48	
	GS39-I	0.33	0.34		0.93	0.31	10.00	6.78	2.28	
	GS40-I	0.19	0.192		0.90	0.17	10.00	6.78	1.17	
	GS41-I	0.19	0.194		0.90	0.17	10.00	6.78	1.18	
	GS42-I	0.19	0.193		0.90	0.17	10.00	6.78	1.18	
	GS43-I	0.19	0.193		0.90	0.17	10.00	6.78	1.18	
	GS44-I	0.19	0.194		0.90	0.17	10.00	6.78	1.18	
	GS45-I	0.19	0.193		0.90	0.17	10.00	6.78	1.18	
	GS46-I	0.19	0.193		0.90	0.17	10.00	6.78	1.18	
	GS47-I	0.19	0.193		0.90	0.17	10.00	6.78	1.18	
	GS48-I	0.41	0.41		0.90	0.37	10.00	6.78	2.5	
	GS-DI1	4.62		4.62	0.85	3.93	10.00	6.78	26.62	
	GS-DI2	0.41		0.41	0.85	0.35	10.00	6.78	2.34	
	H1	0.19	0.19		0.90	0.17	10.00	6.78	1.16	
LINE H	H2	0.16	0.16		0.90	0.14	10.00	6.78	0.98	
	H3	0.18	0.18		0.90	0.16	10.00	6.78	1.10	
	H4	0.17	0.17		0.90	0.15	10.00	6.78	1.04	
	I 1	0.34	0.23	0.11	0.88	0.30	10.00	6.78	2.03	
	I 1A	0.19	0.19		0.90	0.17	10.00	6.78	1.16	
	I 1B	0.22	0.22		0.90	0.20	10.00	6.78	1.34	
	I 2	0.29	0.22	0.07	0.90	0.26	10.00	6.78	1.76	
	I 2A	0.19	0.19		0.90	0.17	10.00	6.78	1.16	
LINE I	I 2B	0.24	0.24		0.90	0.22	10.00	6.78	1.46	
	I 3	0.33	0.22	0.11	0.89	0.29	10.00	6.78	1.99	
	I 4	0.32	0.22	0.10	0.88	0.28	10.00	6.78	1.91	
	I 5	0.42	0.29	0.13	0.88	0.37	10.00	6.78	2.51	
	I 6	0.43	0.15	0.28	0.87	0.37	10.00	6.78	2.52	
	I 7	0.42	0.26	0.16	0.88	0.37	10.00	6.78	2.52	
	I 8	0.51	0.26	0.25	0.88	0.44	10.00	6.78	3.00	
	I 9	0.26	0.15	0.11	0.88	0.22	10.00	6.78	1.52	
	I 10	0.22	0.15	0.07	0.88	0.19	10.00	6.78	1.31	
	J 1	0.27	0.16	0.11	0.88	0.24	10.00	6.78	1.61	
	J 2	0.16	0.15	0.01	0.90	0.14	10.00	6.78	0.97	
	J 3	0.29	0.15	0.14	0.88	0.25	10.00	6.78	1.72	
	J 4	0.17	0.15	0.03	0.94	0.16	10.00	6.78	1.09	
	J 5	0.3	0.15	0.15	0.88	0.26	10.00	6.78	1.78	
	J 6	0.16	0.13	0.03	0.89	0.14	10.00	6.78	0.97	
	J 7	0.36	0.2	0.16	0.88	0.32	10.00	6.78	2.14	
	J 8	0.28	0.23	0.06	0.92	0.26	10.00	6.78	1.75	
	J 9	0.24	0.22	0.03	0.93	0.22	10.00	6.78	1.52	
	J 10	0.19	0.19	0	0.90	0.17	10.00	6.78	1.16	
LINE J	J 11	0.17	0.17	0	0.90	0.15	10.00	6.78	1.04	
	J 13	0.25	0.14	0.11	0.88	0.22	10.00	6.78	1.49	
	J 14	0.31	0.31	0	0.90	0.28	10.00	6.78	1.89	
	J 15	0.39	0.26	0.13	0.88	0.34	10.00	6.78	2.34	
	J 17	0.25	0.11	0.15	0.91	0.23	10.00	6.78	1.54	
	J 18	0.25	0.25	0	0.90	0.23	10.00	6.78	1.53	
	J 19	0.29	0.16	0.13	0.88	0.25	10.00	6.78	1.73	

TRUNK LINES & STUBS ARE DESIGNED FOR FULLY DEVELOPED TxDOT'S 5 YR STORM.

TYPE OF C-VALUES

PAV. C=0.9

DEVELOPED C=0.85

STATE OF TEXAS
HASSAN SAM MOGHADASSI
84231
LICENSED
PROFESSIONAL ENGINEER

H. Moghadassi , P.E. 7/27/11
Signature of Registrant & Date

Texas Department of Transportation
© 2011

SH 289
RUNOFF COMPUTATION

SHEET 4 OF 11

DESIGN	FED.RD. DIV.NO.	STATE PROJECT NO.		HIGHWAY NO.
SHM	6	SEE TITLE SHEET		SH 289
GRAPHICS	STATE	DISTRICT	COUNTY	SHEET NO.
TA	TEXAS	DALLAS	COLLIN	200
CHECK	CONTROL	SECTION	JOB	
SHM	0091	03	021	
CHECK				

P-201107-01

RUNOFF COMPUTATIONS- TRUNK LINE & STUBS

TRUNK ID	DRAINAGE AREA No.	(Ac)	DEVELOPED ACRES DRAINED C=0.9	C=0.85	Wtd C	TOTAL CA	TC(MIN) USED IN DESIGN	I5 IN/HR	Q5 CFS	COMMENT
	J 20	0.24	0.18	0.06	0.89	0.21	10.00	6.78	1.44	
	J 21	0.25	0.16	0.09	0.88	0.22	10.00	6.78	1.49	
	J 22	0.23	0.16	0.07	0.88	0.20	10.00	6.78	1.38	
	J 23	0.17	0.11	0.06	0.88	0.15	10.00	6.78	1.02	
	J 24	0.16	0.11	0.05	0.88	0.14	10.00	6.78	0.96	
	J 25	0.21	0.16	0.06	0.93	0.20	10.00	6.78	1.32	
	J 26	0.2	0.13	0.06	0.84	0.17	10.00	6.78	1.14	
	J 27	0.42	0.2	0.22	0.87	0.37	10.00	6.78	2.49	
	J 28	0.25	0.17	0.08	0.88	0.22	10.00	6.78	1.50	
	J 29	0.82	0.35	0.47	0.87	0.71	10.00	6.78	4.84	
	J 30	0.29	0.22	0.07	0.89	0.26	10.00	6.78	1.75	
	J 31	0.82	0.2	0.63	0.87	0.72	10.00	6.78	4.85	
	J 32	0.32	0.22	0.1	0.88	0.28	10.00	6.78	1.92	
	J 33	0.64	0.21	0.43	0.87	0.55	10.00	6.78	3.76	
	J 34	0.3	0.21	0.1	0.91	0.27	10.00	6.78	1.86	
	J 35	0.36	0.19	0.17	0.88	0.32	10.00	6.78	2.14	
	J 36	0.33	0.22	0.12	0.91	0.30	10.00	6.78	2.03	
LINE J	J 37	1	0.41	0.59	0.87	0.87	10.00	6.78	5.90	
	J 38	0.31	0.27	0.04	0.89	0.28	10.00	6.78	1.88	
	J 39	0.67	0.16	0.51	0.86	0.58	10.00	6.78	3.92	
	J 40	0.33	0.26	0.07	0.89	0.29	10.00	6.78	1.99	
	J 41	0.54	0.14	0.41	0.88	0.47	10.00	6.78	3.22	
	J 43	0.54	0.12	0.42	0.86	0.47	10.00	6.78	3.15	
	J 44	0.34	0.3	0.04	0.89	0.30	10.00	6.78	2.06	
	J 45	0.51	0.15	0.36	0.86	0.44	10.00	6.78	2.99	
	J 46	0.31	0.24	0.06	0.86	0.27	10.00	6.78	1.81	
	J 47	0.98	0.24	0.74	0.86	0.85	10.00	6.78	5.73	
	J 48	0.24	0.19	0.05	0.89	0.21	10.00	6.78	1.45	
	J 49	0.81	0.19	0.61	0.85	0.69	10.00	6.78	4.67	
	J 50	0.22	0.16	0.06	0.89	0.20	10.00	6.78	1.32	
	J 51	0.77	0.16	0.61	0.86	0.66	10.00	6.78	4.49	
	J 52	0.17	0.12	0.05	0.89	0.15	10.00	6.78	1.02	
	J 53	0.51	0.12	0.39	0.86	0.44	10.00	6.78	2.98	
	J 54	0.2	0.16	0.04	0.89	0.18	10.00	6.78	1.21	
	J 55	0.64	0.14	0.5	0.86	0.55	10.00	6.78	3.74	
	J 56	0.26	0.22	0.04	0.89	0.23	10.00	6.78	1.57	
	J 57	0.88	0.19	0.69	0.86	0.76	10.00	6.78	5.14	
	J1-S	2.14		2.14	0.85	1.82	10.00	6.78	12.35	
	J2-S	1.15		1.15	0.85	0.98	10.00	6.78	6.63	
	J3-S	1.18		1.18	0.85	1.00	10.00	6.78	6.80	
	B-Drop	2.92	0.29	2.63	0.86	2.49	10.00	6.78	16.90	***
	B-Drop2									***
	B-Drop3									***
	B1-I	0.39	0.32	0.06	0.89	0.34	10.00	6.78	2.33	
LINE B	B2-I	0.39	0.34	0.05	0.89	0.35	10.00	6.78	2.34	
	B3-I	0.35	0.29	0.06	0.89	0.31	10.00	6.78	2.11	
	B4-I	0.32	0.29	0.03	0.90	0.29	10.00	6.78	1.94	
LINE C	C1-I	0.56	0.38	0.18	0.88	0.50	10.00	6.78	3.36	
	C2-I	0.60	0.15	0.46	0.88	0.53	10.00	6.78	3.50	
	C3-I	0.56	0.18	0.38	0.87	0.49	10.00	6.78	3.31	
	C4-I	0.49	0.18	0.31	0.87	0.43	10.00	6.78	2.89	
	C5-I	0.20	0.17	0.03	0.89	0.18	10.00	6.78	1.20	
	C5-E	2.96		2.96	0.85	2.52	10.00	6.78	17.03	***
	C6-E	0.55	0.35	0.21	0.90	0.48	10.00	6.78	3.29	
	C6-S	0.64	0.29	0.36	0.89	0.56	10.00	6.78	3.80	
	C7-I	0.74	0.17	0.57	0.86	0.64	10.00	6.78	4.33	
	C7-S	0.65		0.65	0.85	0.55	10.00	6.78	3.73	
LINE C	C8-I	0.71	0.23	0.48	0.87	0.61	10.00	6.78	4.15	
	C9-I	0.59	0.35	0.24	0.88	0.52	10.00	6.78	3.51	
	C10-I	0.68	0.68		0.90	0.61	10.00	6.78	4.12	
	C10a-E	2.08		2.08	0.85	1.77	10.00	6.78	11.96	
	C11-I	0.25	0.25		0.90	0.22	10.00	6.78	1.52	
	C11a-E	6.53		6.53	0.85	5.55	10.00	6.78	37.61	
	C12	0.29	0.19	0.10	0.88	0.25	10.00	6.78	1.71	
	C13	0.25	0.13	0.11	0.88	0.22	10.00	6.78	1.46	
	C14	0.24	0.13	0.11	0.88	0.21	10.00	6.78	1.45	
	C15	0.25	0.14	0.11	0.88	0.22	10.00	6.78	1.47	
	C16	0.13	0.1	0.03	0.89	0.12	10.00	6.78	0.79	
	C17	0.28	0.28		0.90	0.25	10.00	6.78	1.68	
	C18	0.33	0.33		0.90	0.30	10.00	6.78	2.01	
	C19	0.32	0.32		0.90	0.29	10.00	6.78	1.95	
LINE C	C20	0.18	0.18		0.90	0.16	10.00	6.78	1.07	
	C21	0.68	0.68		0.90	0.61	10.00	6.78	4.12	
	C22	0.25	0.25		0.90	0.22	10.00	6.78	1.52	

NOTE: TRUNK LINES & STUBS ARE DESIGNED FOR FULLY DEVELOPED TxDOT'S 5 YR STORM.

*** GRATE INLET C5-E DESIGN CAPACITY IS THE PROPOSED DISCHARGE FROM THE CELINA HIGH SCHOOL THAT DRAINS TO DETENTION POND-2. THE PROPOSED DISCHARGE FOR THE CELINA HIGH SCHOOL DETENTION POND-2 WAS OBTAINED FROM CELINA HIGH SCHOOL PROJECT NUMBER RLK 06076 SHEET C12a OF 32 APPROVED FOR CONSTRUCTION ON 04/03/07.

GRATE INLET C5-E DESIGN CAPACITY > CELINA HIGH SCHOOL PROPOSED DISCHARGE TO POND-2 = 73.64 CFS > 72.90 CFS
THIS WILL ONLY OCCUR IF POND IS NOT FUCTIONING CORRECTLY OTHERWISE THE DISCHARGE TO INLET C5-E WILL BE, DRAINAGE AREA C5-E + POND-2 MAX. 5 YEAR RELEASE
=17.03 CFS+14.2 CFS
=31.23 CFS

GRATE INLET B-DROP, B-DROP2, B-DROP3 TOTAL DESIGN CAPACITY TOGETHER IS THE 25 YEAR DISCHARGE FROM DRAINAGE AREA B, SEE 'DRAINAGE AREA & COMPUTATION' SHEET 179. THIS WILL ONLY OCCUR IF POND-1 FROM THE CELINA HIGH SCHOOL IS NOT FUCTIONING CORRECTLY OTHERWISE THE DISCHARGE SHOWN IS WHAT THE INLETS WILL DRAIN.

SCHOOL PROJECT NUMBER RLK 06076 SHEET C12a OF 32 APPROVED FOR CONSTRUCTION ON 04/03/07.

TYPE OF C-VALUES
PAV. C=0.9
DEVELOPED C=0.85

STATE OF TEXAS
CHRISTOPHER P. ROCHA
107690
LICENSED
PROFESSIONAL ENGINEER

Chris Rocha ,P.E. 7/13/11
Signature of Registrant & Date

STATE OF TEXAS
HASSAN SAM MOGHADASSI
84231
LICENSED
PROFESSIONAL ENGINEER

H. Moghadassi ,P.E. 7/12/11
Signature of Registrant & Date

Texas Department of Transportation
© 2011

SH 289
RUNOFF COMPUTATION

SHEET 5 OF 11

DESIGN	FED.RD. DIV.NO.	STATE PROJECT NO.		HIGHWAY NO.
SHM	6	SEE TITLE SHEET		SH 289
GRAPHICS	STATE	DISTRICT	COUNTY	SHEET NO.
TA	TEXAS	DALLAS	COLLIN	
CHECK	CONTROL	SECTION	JOB	
SHM	0091	03	021	201
CHECK				

P-201107-01

INLET - ID	INLET TYPE	PROFILE TYPE	CHAIN	STATION	OFFSET FT	DISCHARGE CFS	CAPACITY CFS	DESIGN FREQUENCY YR	BY PASS FLOW CFS	BY PASS FLOW INTO CFS	CURB LENGTH FT	GRATE LENGTH FT	LENGTH REQUIRED FT	MAX PONDED WIDTH FT	COMPUTED PONDED WIDTH FT	COMPUTED PONDED DEPTH FT	SPREAD "N"	LONGITUDINAL SLOPE %
A1-I	Curb	On Grade	289PRO	139+00.00	-48.35	3.45	3.45	5	0	0	15	n/a	10.44	12	11.89	0.24	0.013	0.73
A2-I	Curb	On Grade	289PRO	137+40.00	-47	4.64	4.64	5	0	0	15	n/a	14.22	12	11.81	0.24	0.013	1.37
A3-I	Curb	On Grade	289PRO	136+00.00	-47	5.26	5.26	5	0	0	20	n/a	18.1	12	10.8	0.22	0.013	2.85
A4-I	Curb	On Grade	289PRO	134+70.00	-47.01	4.84	4.84	5	0	0	20	n/a	17.28	12	10.46	0.21	0.013	2.85
A5-I	Curb	On Grade	289PRO	133+47.00	-47.01	4.17	4.15	5	0.03	0	15	n/a	15.96	12	9.9	0.2	0.013	2.85
A6-I	Curb	On Grade	289PRO	132+30.00	-47	4.16	4.14	5	0.03	0.03	15	n/a	15.94	12	9.89	0.2	0.013	2.85
A7-I	Curb	On Grade	289PRO	131+10.00	-47	4.23	4.2	5	0.03	0.03	15	n/a	16.07	12	9.95	0.2	0.013	2.85
A8-I	Curb	On Grade	289PRO	130+10.00	-47	3.34	3.34	5	0	0.03	15	n/a	14.18	12	9.1	0.18	0.013	2.85
A9-I	Curb	On Grade	289PRO	129+10.00	-47	3.46	3.46	5	0	0	15	n/a	14.44	12	9.22	0.18	0.013	2.85
A10	Curb	On Grade	289PRO	139+18.00	47	1.05	1.05	5	0	0	10	n/a	5.55	12	7.61	0.15	0.013	0.73
A11	Curb	On Grade	289PRO	137+40.00	47	1.4	1.4	5	0	0	10	n/a	7.54	12	7.54	0.15	0.013	1.37
A12	Curb	On Grade	289PRO	136+00.00	47	0.86	0.86	5	0	0	10	n/a	7.31	12	5.49	0.11	0.013	2.85
A13	Curb	On Grade	289PRO	135+25.00	47	0.71	0.71	5	0	0	10	n/a	6.67	12	5.1	0.1	0.013	2.85
A14	Curb	On Grade	289PRO	132+90.00	59	1.23	1.23	5	0	0	10	n/a	8.62	12	6.27	0.13	0.013	2.85
A15	Curb	On Grade	289PRO	131+66.08	59	1	1	5	0	0	10	n/a	7.82	12	5.8	0.12	0.013	2.85
A16	Curb	On Grade	289PRO	130+52.00	59	0.99	0.99	5	0	0	15	n/a	7.79	12	5.78	0.12	0.013	2.85
A17	Curb	On Grade	289PRO	129+60.02	53.95	0.81	0.81	5	0	0	10	n/a	7.07	12	5.35	0.11	0.013	2.85
A18	Curb	On Grade	289PRO	129+10.00	46.64	0.62	0.62	5	0	0	10	n/a	6.27	12	4.84	0.1	0.013	2.85
B1-I	Curb	On Grade	289PRO	143+31.50	-59	2.33	2.33	5	0	0	10	n/a	8.41	12	10.26	0.21	0.015	0.73
B2-I	Curb	On Grade	289PRO	140+84.00	-61.29	2.34	2.34	5	0.00	0.00	10.00	n/a	8.44	12.00	10.28	0.21	0.015	0.73
B3-I	Curb	On Grade	289PRO	143+31.50	47	2.11	2.11	5	0.00	0.00	10.00	n/a	7.97	12.00	9.88	0.20	0.015	0.73
B4-I	Curb	On Grade	289PRO	140+84.00	47	1.93	1.93	5	0.00	0.00	10.00	n/a	7.61	12.00	9.57	0.19	0.015	0.73
*** B-Drop	Grate	Sag	289PRO	141+70.50	-81.19	32.67	33.61	25	0.00	0.00	n/a	7.67	n/a	12.00	9.85	1.18	0.015	n/a
***B-Drop2	Grate	Sag	289PRO	141+80.21	-81.19	32.67	33.61	25	0.00	0.00	n/a	7.67	n/a	12.00	9.85	1.18	0.015	n/a
***B-Drop3	Grate	Sag	289PRO	141+60.79	-81.19	32.67	33.61	25	0.00	0.00	n/a	7.67	n/a	12.00	9.85	1.18	0.015	n/a
C1-I	Curb	On Grade	289PRO	148+16.00	-59	3.36	3.36	5	0	0	15	n/a	13.33	12	9.59	0.19	0.015	2.19
C2-I	Curb	On Grade	289PRO	149+25.00	-59	3.5	3.5	5	0	0	15	n/a	14.13	12	9.48	0.19	0.015	2.53
C3-I	Curb	On Grade	289PRO	150+60.00	-59	3.31	3.31	5	0	0	15	n/a	13.71	12	9.28	0.19	0.015	2.53
C4-I	Curb	On Grade	289PRO	151+87.73	-48.5	2.89	2.89	5	0	0	15	n/a	12.76	12	8.82	0.18	0.015	2.53
*** C5-E	Grate	Sag	289PRO	153+45.50	-68.08	31.23	73.64	5	0	0	n/a	7.67	n/a	12	1.30	1.16	0.015	n/a
C5-I	Curb	On Grade	289PRO	153+42.50	-48.2	1.2	1.2	5	0	0	10	n/a	7.62	12	6.69	0.13	0.015	1.91
C6-E	Curb	On Grade	289PRO	155+33.00	-59.13	5.18	5.18	5	0	0	20	n/a	16.33	12	11.58	0.23	0.015	1.91
C7-I	Curb	On Grade	289PRO	156+53.86	-59	4.33	4.33	5	0	0	20	n/a	13.54	12	11.61	0.23	0.015	1.31
C8-I	Curb	On Grade	289PRO	158+24.50	-59	4.15	4.15	5	0	0	20	n/a	13.24	12	11.43	0.23	0.015	1.31
C9-I	Curb	On Grade	289PRO	161+26.50	-47	3.5	3.5	5	0	0	15	n/a	12.06	12	10.73	0.21	0.015	1.31
C10-I	Curb	Sag	289PRO	164+40.86	-47	4.12	15.13	5	0	0	15	n/a	1.27	12	10.51	0.21	0.015	n/a
C11-I	Curb	On Grade	289PRO	166+54.50	-47	1.52	1.52	5	0	0	10	n/a	6.24	12	9.22	0.18	0.015	0.55
C10a-E	Grate	Sag	289PRO	162+69.00	-67.17	11.96	29.84	5	0	0	n/a	7.67	n/a	12	5.94	0.54	0.015	n/a
C12	Curb	On Grade	289PRO	147+81.00	47	1.71	1.71	5	0	0	10	n/a	9.01	12	7.7	0.15	0.015	1.84
C13	Curb	On Grade	289PRO	149+16.00	47	1.46	1.46	5	0	0	10	n/a	9.06	12	6.83	0.14	0.015	2.53
C14	Curb	On Grade	289PRO	150+40.00	47	1.45	1.45	5	0	0	10	n/a	9.02	12	6.81	0.14	0.015	2.53
C15	Curb	On Grade	289PRO	151+88.00	47	1.47	1.47	5	0	0	10	n/a	9.09	12	6.85	0.14	0.015	2.53
C16	Curb	On Grade	289PRO	152+81.00	47	0.78	0.78	5	0	0	10	n/a	6.35	12	5.64	0.11	0.015	2.02
C17	Curb	On Grade	289PRO	154+91.00	47	1.68	1.68	5	0	0	10	n/a	9.01	12	7.6	0.15	0.015	1.91
C18	Curb	On Grade	289PRO	157+41.00	47	2.01	2.01	5	0	0	10	n/a	8.96	12	8.7	0.17	0.015	1.31
C19	Curb	On Grade	289PRO	159+91.00	47	1.97	1.97	5	0	0	10	n/a	8.86	12	8.64	0.17	0.015	1.31
C20	Curb	On Grade	289PRO	161+26.50	47	1.07	1.07	5	0	0	10	n/a	6.52	12	6.87	0.14	0.015	1.31
C21	Curb	Sag	289PRO	164+40.85	47	4.12	15.13	5	0	0	15	n/a	1.27	12	10.51	0.21	0.015	n/a
C22	Curb	On Grade	289PRO	166+54.50	47	1.52	1.52		0	0	10	n/a	6.24	12	9.22	0.18	0.015	0.55
DN-DI1	Grate	Sag	289PRO	172+00.00	-64	7.47	12.41	5	0	0	n/a	3	n/a	12	2.82	0.62	0.013	n/a
DN 1	Curb	On Grade	289PRO	171+11.00	47	1.93	1.93	5	0	0	10	n/a	7.38	12	9.79	0.2	0.013	0.65
DN 2	Curb	On Grade	289PRO	170+99.00	-47	1.88	1.88	5	0	0	10	n/a	7.27	12	9.69	0.19	0.013	0.65
DN 3	Curb	On Grade	289PRO	172+60.00	47	1.18	1.18	5	0	0	10	n/a	5.71	12	8.14	0.16	0.013	0.65
DN 4	Curb	On Grade	289PRO	172+49.00	-47	1.18	1.18	5	0	0	10	n/a	5.71	12	8.14	0.16	0.013	0.65
DN 5	Curb	On Grade	289PRO	174+11.00	47	1.18	1.18	5	0	0	10	n/a	5.55	12	8.3	0.17	0.013	0.58
DN 6	Curb	On Grade	289PRO	173+99.00	-47	1.18	1.18	5	0	0	10	n/a	5.71	12	8.14	0.16	0.013	0.65
DN 8	Curb	Sag	289PRO	175+00.00	-47	2.38	15.13	5	0	0	15	n/a	3.55	12	7.29	0.15	0.013	n/a
DS 1	Curb	Sag	289PRO	175+08.00	47	2.33	15.13	5	0	0	15	n/a	3.55	12	7.18	0.14	0.013	n/a
DS 2	Curb	Sag	289PRO	179+54.50	-47.88	3.85	15.13	5	0	0	15	n/a	5.17	12	10.04	0.2	0.013	n/a
DS 3	Curb	Sag	289PRO	179+54.50	47	3.81	15.13	5	0	0	15	n/a	5.17	12	9.97	0.2	0.013	n/a
DS 4	Curb	On Grade	289PRO	181+61.50	-47	1.51	1.51	5	0	0	10	n/a	6.73	12	8.68	0.17	0.013	0.75
DS 5	Curb	On Grade	289PRO	181+52.00	48.98	1.5	1.5	5	0	0	10	n/a	6.7	12	8.65	0.17	0.013	0.75
DS 6	Curb	On Grade	289PRO	183+51.00	-47	2.25	2.25	5	0	0	10	n/a	8.31	12	10.08	0.2	0.013	0.75
DS 7	Curb	On Grade	289PRO	183+39.00	47	2.31	2.31	5	0	0	10	n/a	8.43	12	10.18	0.2	0.013	0.75
E1	Curb	On Grade	289PRO	200+00.00	-47	2.27	2.27	5	0	0	15	n/a	12.49	12	7.47	0.15	0.013	3.77
E2	Curb	On Grade	289PRO	198+00.00	-47	4.23	4.23	5	0	0	20	n/a	17.21	12	9.44	0.19	0.013	3.77
E3	Curb	On Grade	289PRO	196+50.00	-47	4.96	4.96	5	0	0	20	n/a	18.73	12	10.02	0.2	0.013	3.77
E4	Curb	On Grade	289PRO	195+00.00	-47	3.71	3.71	5	0	0	20	n/a	16.07	12	8.99	0.18	0.013	3.77
E5	Curb	On Grade	289PRO	193+50.00	-47	3.72	3.72	5	0	0	20	n/a	16.09	12	9	0.18	0.013	3.77
E6	Curb	On Grade	289PRO	192+00.00	-47	4.51	4.51	5	0	0	20	n/a	17.8	12	9.67	0.19	0.013	3.77
E7	Curb	On Grade	289PRO	190+50.00	-47	4.2	4.2	5	0	0	20	n/a	17.16	12	9.42	0.19	0.013	3.77
E8	Curb	On Grade	289PRO	189+00.00	-46.94	4.69	4.69	5	0	0	20	n/a	18.18	12	9.81	0.2	0.013	3.77
E9GI	Grate	On Grade	289PRO	188+00.00	-68	0.62	0.58	5	0.04	0	n/a	7.67	n/a	12	4.6	0.09	0.013	3.77
E10	Curb	On Grade	289PRO	187+50.00	-47	0.99	0.99	5	0	0	10	n/a	8.39	12	5.47	0.11	0.013	3.77
E11	Curb	On Grade	289PRO	186+00.00	-47	1	1	5	0	0	10	n/a	8.45	12	5.5	0.11	0.013	3.77
E12	Curb	On Grade	289PRO	200+00.00	47	1.64	1.63	5	0.01	0	10	n/a	10.66	12	6.62	0.13	0.013	3.77
E13	Curb	On Grade	289PRO	198+00.00	47	1.4	1.4	5	0	0	10	n/a	9.9	12	6.24	0.12	0.013	3.77
E14	Curb	On Grade	289PRO	196+50.00	47	1.19	1.19	5	0	0	10	n/a	9.16	12	5.87	0.12	0.013	3.77
E15	Curb	On Grade	289PRO	195+00.00	47	1.18	1.18	5	0	0	10	n/a	9.12	12	5.85	0.12	0.013	3.77

NOTE:

*** GRATE INLET C5-E DESIGN CAPACITY IS THE PROPOSED DISCHARGE FROM THE CELINA HIGH SCHOOL THAT DRAINS TO DETENTION POND-2. THE PROPOSED DISCHARGE FOR THE CELINA HIGH SCHOOL DETENTION POND-2 WAS OBTAINED FROM CELINA HIGH SCHOOL PROJECT NUMBER RLK 06076 SHEET C12a OF 32 APPROVED FOR CONSTRUCTION ON 04/03/07.

GRATE INLET C5-E DESIGN CAPACITY >
CELINA HIGH SCHOOL PROPOSED DISCHARGE TO POND-2 =
73.64 CFS > 72.90 CFS
THIS WILL ONLY OCCUR IF POND IS NOT FUCTIONING CORRECTLY
OTHERWISE THE DISCHARGE TO INLET C5-E WILL BE,
DRAINAGE AREA C5-E + POND-2 MAX. 5 YEAR RELEASE
=17.03 CFS+14.2 CFS
=31.23 CFS

GRATE INLET B-DROP, B-DROP2, B-DROP3 TOTAL DESIGN CAPACITY TOGETHER IS THE 25 YEAR DISCHARGE FROM DRAINAGE AREA B, SEE 'DRAINAGE AREA & COMPUTATION' SHEET 179. THIS WILL ONLY OCCUR IF POND-1 FROM THE CELINA HIGH SCHOOL IS NOT FUCTIONING CORRECTLY OTHERWISE THE DISCHARGE SHOWN IS WHAT THE INLETS WILL DRAIN.

SCHOOL PROJECT NUMBER RLK 06076 SHEET C12a OF 32 APPROVED FOR CONSTRUCTION ON 04/03/07.

STATE OF TEXAS
CHRISTOPHER P. ROCHA
107690
LICENSED
PROFESSIONAL ENGINEER

Chris Rocha, P.E. 7/13/11
Signature of Registrant & Date

STATE OF TEXAS
HASSAN SAM MOGHADASSI
84231
LICENSED
PROFESSIONAL ENGINEER

H. Moghadassi, P.E. 7/12/11
Signature of Registrant & Date

Texas Department of Transportation
© 2011

SH 289
INLET CALCULATION

SHEET 6 OF 11

DESIGN	FED. RD. DIV. NO.	STATE PROJECT NO.		HIGHWAY NO.
SHM	6	SEE TITLE SHEET		SH 289
GRAPHICS	STATE	DISTRICT	COUNTY	SHEET NO.
TA	TEXAS	DALLAS	COLLIN	202
CHECK	CONTROL	SECTION	JOB	
SHM	0091	03	021	
CHECK				

P-201107-01

INLET - ID	INLET TYPE	PROFILE TYPE	CHAIN	STATION	OFFSET FT	DISCHARGE CFS	CAPACITY CFS	DESIGN FREQUENCY YR	BY PASS FLOW CFS	BY PASS FLOW INTO CFS	CURB LENGTH FT	GRATE LENGTH FT	LENGTH REQUIRED FT	MAX PONDED WIDTH FT	COMPUTED PONDED WIDTH FT	COMPUTED PONDED DEPTH FT	SPREAD "N"	LONGITUDINAL SLOPE %
E16	Curb	On Grade	289PRO	193+50.00	47	1.17	1.17	5	0	0	10	n/a	9.1	12	5.84	0.12	0.013	3.77
E17	Curb	On Grade	289PRO	192+00.00	47	1.18	1.18	5	0	0	10	n/a	9.13	12	5.86	0.12	0.013	3.77
E18	Curb	On Grade	289PRO	190+50.00	47	1.19	1.19	5	0	0	10	n/a	9.16	12	5.87	0.12	0.013	3.77
E19	Curb	On Grade	289PRO	189+00.00	47	1.17	1.17	5	0	0	10	n/a	9.09	12	5.84	0.12	0.013	3.77
E20	Curb	On Grade	289PRO	187+50.00	47	1.18	1.18	5	0	0	10	n/a	9.11	12	5.85	0.12	0.013	3.77
E21	Curb	On Grade	289PRO	186+00.00	47	1.19	1.19	5	0	0	10	n/a	9.15	12	5.87	0.12	0.013	3.77
F1	Curb	On Grade	289PRO	203+63.00	-47	0.52	0.52	5	0	0	5	n/a	3.42	12	6.5	0.13	0.013	0.42
F2	Curb	On Grade	289PRO	204+85.00	-47	0.78	0.78	5	0	0	10	n/a	5.46	12	6.25	0.12	0.013	1.17
F3	Curb	On Grade	289PRO	206+00.00	-47	0.79	0.79	5	0	0	10	n/a	5.6	12	6.18	0.12	0.013	1.26
F4	Curb	On Grade	289PRO	203+63.00	47	0.71	0.71	5	0	0	5	n/a	3.96	12	7.29	0.15	0.013	0.42
F5	Curb	On Grade	289PRO	204+85.00	47	0.95	0.95	5	0	0	10	n/a	6	12	6.72	0.13	0.013	1.17
F6	Curb	On Grade	289PRO	206+00.00	47	0.93	0.93	5	0	0	10	n/a	6.03	12	6.56	0.13	0.013	1.26
FGINLT	Grate	On Grade	289PRO	203+00.08	-79.18	2.04	1.99	5	0.05	0	n/a	7.67	n/a	12	18.96	0.37	0.013	0.04
GN1-I	Curb	On Grade	289PRO	240+85.00	-47	0.8	0.8	5	0	0	10	n/a	5.52	12	6.32	0.13	0.013	1.17
GN1A-I	Curb	On Grade	289PRO	242+09.57	-47	0.97	0.93	5	0.04	0	5	n/a	6.04	12	6.77	0.14	0.013	1.17
GN2-I	Curb	On Grade	289PRO	239+69.32	-47	0.77	0.77	5	0	0	10	n/a	5.42	12	6.22	0.12	0.013	1.17
GN3-I	Curb	On Grade	289PRO	238+50.00	-47	0.79	0.79	5	0	0	10	n/a	5.48	12	6.28	0.13	0.013	1.17
GN4-I	Curb	On Grade	289PRO	237+30.00	-47	2.97	2.97	5	0	0	15	n/a	10.71	12	10.3	0.21	0.013	1.17
GN5-I	Curb	On Grade	289PRO	236+10.00	-47	3.46	3.46	5	0	0	15	n/a	13.17	12	9.91	0.2	0.013	1.95
GN6-I	Curb	On Grade	289PRO	234+90.00	-47	3.63	3.63	5	0	0	15	n/a	15	12	9.31	0.19	0.013	2.99
GN7-I	Curb	On Grade	289PRO	233+65.00	-47	4.07	4.07	5	0	0	20	n/a	16.86	12	9.3	0.19	0.013	3.77
GN8-I	Curb	On Grade	289PRO	232+47.02	-47	4.09	4.09	5	0	0	20	n/a	16.92	12	9.33	0.19	0.013	3.77
GN9-I	Curb	On Grade	289PRO	231+25.00	-46.96	4.06	4.06	5	0	0	20	n/a	16.85	12	9.3	0.19	0.013	3.77
GN10-I	Curb	On Grade	289PRO	230+10.00	-47.07	3.9	3.9	5	0	0	20	n/a	16.49	12	9.16	0.18	0.013	3.77
GN11-I	Curb	On Grade	289PRO	228+50.00	-46.83	3.77	3.77	5	0	0	20	n/a	16.2	12	9.04	0.18	0.013	3.77
GN12-I	Curb	On Grade	289PRO	227+40.00	-47	4.06	4.06	5	0	0	20	n/a	16.85	12	9.3	0.19	0.013	3.77
GN13-I	Curb	On Grade	289PRO	226+00.00	-47	4.1	4.1	5	0	0	20	n/a	16.93	12	9.33	0.19	0.013	3.77
GN14-I	Curb	On Grade	289PRO	241+10.00	47	0.8	0.8	5	0	0	10	n/a	5.52	12	6.32	0.13	0.013	1.17
GN14A-I	Curb	On Grade	289PRO	241+99.98	46.99	1.39	1.39	5	0	0	10	n/a	7.21	12	7.76	0.16	0.013	1.16
GN15-I	Curb	On Grade	289PRO	239+60.00	47	1.08	1.08	5	0	0	10	n/a	6.37	12	7.06	0.14	0.013	1.17
GN16-I	Curb	On Grade	289PRO	238+40.00	47	0.94	0.94	5	0	0	10	n/a	5.96	12	6.7	0.13	0.013	1.17
GN17-I	Curb	On Grade	289PRO	237+20.00	46.82	0.94	0.94	5	0	0	10	n/a	5.96	12	6.7	0.13	0.013	1.17
GN18-I	Curb	On Grade	289PRO	236+00.00	47	0.94	0.94	5	0	0	10	n/a	6.93	12	6.04	0.12	0.013	2.04
GN19-I	Curb	On Grade	289PRO	234+80.00	47	0.95	0.95	5	0	0	10	n/a	7.81	12	5.61	0.11	0.013	3.08
GN20-I	Curb	On Grade	289PRO	233+60.00	47	0.95	0.95	5	0	0	10	n/a	8.24	12	5.39	0.11	0.013	3.77
GN21-I	Curb	On Grade	289PRO	232+40.00	47	0.94	0.94	5	0	0	10	n/a	8.22	12	5.38	0.11	0.013	3.77
GN22-I	Curb	On Grade	289PRO	231+20.00	47	0.97	0.97	5	0	0	10	n/a	8.32	12	5.43	0.11	0.013	3.77
GN23-I	Curb	On Grade	289PRO	230+00.00	47	0.96	0.96	5	0	0	10	n/a	8.28	12	5.41	0.11	0.013	3.77
GN24-I	Curb	On Grade	289PRO	229+06.80	47	0.86	0.86	5	0	0	10	n/a	7.88	12	5.2	0.1	0.013	3.77
GN25-I	Curb	On Grade	289PRO	227+40.00	47	1.19	1.19	5	0	0	10	n/a	9.17	12	5.88	0.12	0.013	3.77
GN26-I	Curb	On Grade	289PRO	226+00.00	47	1.11	1.11	5	0	0	10	n/a	8.89	12	5.73	0.11	0.013	3.77
GN27	Curb	On Grade	289PRO	223+85.00	47	1.7	1.68	5	0.02	0	10	n/a	10.84	12	6.71	0.13	0.013	3.77
GN27A	Curb	On Grade	289PRO	223+85.00	-47	1.42	1.42	5	0	0	10	n/a	9.97	12	6.28	0.13	0.013	3.77
GS29-I	Curb	On Grade	289PRO	209+00.00	-47	2.04	2.04	5	0	0	10	n/a	10.08	12	8.08	0.16	0.013	2.02
GS30-I	Curb	On Grade	289PRO	210+50.00	-47	0.99	0.99	5	0	0	10	n/a	7.99	12	5.67	0.11	0.013	3.14
GS31-I	Curb	On Grade	289PRO	212+00.00	-47	0.99	0.99	5	0	0	10	n/a	8.24	12	5.55	0.11	0.013	3.52
GS32-I	Curb	On Grade	289PRO	213+50.00	-47	0.99	0.99	5	0	0	10	n/a	8.26	12	5.56	0.11	0.013	3.52
GS33-I	Curb	On Grade	289PRO	215+00.00	-47	1	1	5	0	0	10	n/a	8.28	12	5.57	0.11	0.013	3.52
GS34-I	Curb	On Grade	289PRO	216+50.00	-47	0.99	0.99	5	0	0	10	n/a	8.27	12	5.56	0.11	0.013	3.52
GS35-I	Curb	On Grade	289PRO	218+00.00	-47	0.99	0.99	5	0	0	10	n/a	8.27	12	5.56	0.11	0.013	3.52
GS36-I	Curb	On Grade	289PRO	219+50.00	-47	0.99	0.99	5	0	0	10	n/a	7.48	12	5.93	0.12	0.013	2.48
GS37-I	Curb	On Grade	289PRO	221+00.00	-47	0.99	0.99	5	0	0	10	n/a	5.72	12	7.15	0.14	0.013	0.91
GS38-I	Curb	On Grade	289PRO	222+35.00	-47	2.21	2.21	5	0	0	10	n/a	7.44	12	10.85	0.22	0.013	0.49
GS39-I	Curb	On Grade	289PRO	209+00.00	46.87	2.43	2.4	5	0.03	0	10	n/a	11.02	12	8.62	0.17	0.013	2.02
GS40-I	Curb	On Grade	289PRO	210+50.00	46.75	1.17	1.17	5	0	0	10	n/a	8.65	12	6.04	0.12	0.013	3.14
GS41-I	Curb	On Grade	289PRO	212+00.00	47.5	1.19	1.19	5	0	0	10	n/a	8.97	12	5.94	0.12	0.013	3.52
GS42-I	Curb	On Grade	289PRO	213+50.00	47	1.18	1.18	5	0	0	10	n/a	8.95	12	5.93	0.12	0.013	3.52
GS43-I	Curb	On Grade	289PRO	215+00.00	46.46	1.18	1.18	5	0	0	10	n/a	8.94	12	5.93	0.12	0.013	3.52
GS44-I	Curb	On Grade	289PRO	216+50.00	47	1.18	1.18	5	0	0	10	n/a	8.96	12	5.93	0.12	0.013	3.52
GS45-I	Curb	On Grade	289PRO	218+00.00	46.99	1.18	1.18	5	0	0	10	n/a	8.94	12	5.92	0.12	0.013	3.52
GS46-I	Curb	On Grade	289PRO	219+50.00	46.89	1.18	1.18	5	0	0	10	n/a	8.12	12	6.32	0.13	0.013	2.48
GS47-I	Curb	On Grade	289PRO	221+00.00	47	1.18	1.18	5	0	0	10	n/a	6.23	12	7.63	0.15	0.013	0.91
GS48-I	Curb	On Grade	289PRO	222+35.00	47.08	2.5	2.5	5	0	0	10	n/a	7.95	12	11.35	0.23	0.013	0.49
GS-DI1	Grate	Sag	289PRO	220+00.00	-71	26.62	29.84	5	0	0	n/a	7.67	n/a	12	7.07	0.93	0.013	n/a
GS-DI2	Grate	Sag	289PRO	216+00.00	63	2.34	12.41	5	0	0	n/a	3	n/a	12	1.57	0.28	0.02	n/a
H 1	Curb	On Grade	289PRO	243+57.00	-47	1.18	1.18	5	0	0	10	n/a	6.65	12	7.29	0.15	0.013	1.17
H 2	Curb	On Grade	289PRO	243+95.00	47	0.97	0.97	5	0	0	10	n/a	6.05	12	6.78	0.14	0.013	1.17
H 3	Curb	On Grade	289PRO	245+14.00	-47	1.1	1.1	5	0	0	10	n/a	6.42	12	7.1	0.14	0.013	1.17
H 4	Curb	On Grade	289PRO	245+06.00	47	1.02	1.02	5	0	0	10	n/a	6.17	12	6.89	0.14	0.013	1.17
I 1	Curb	On Grade	289PRO	249+64.00	-47	2.03	2.03	5	0	0	10	n/a	8.75	12	8.93	0.18	0.013	1.17
I 2	Curb	On Grade	289PRO	249+64.00	47	1.75	1.75	5	0	0	10	n/a	8.11	12	8.45	0.17	0.013	1.17
I 3	Curb	On Grade	289PRO	251+76.00	-47	1.99	1.99	5	0	0	10	n/a	8.65	12	8.86	0.18	0.013	1.17
I 4	Curb	On Grade	289PRO	251+76.00	47	1.91	1.91	5	0	0	10	n/a	8.47	12	8.72	0.17	0.013	1.17
I 5	Curb	On Grade	289PRO	253+76.00	-47	2.51	2.51	5	0	0	10	n/a	9.45	12	9.95	0.2	0.013	1.01
I 6	Curb	On Grade	289PRO	253+76.00	47	2.52	2.52	5	0	0	10	n/a	9.46	12	9.95	0.2	0.013	1.01
I 7	Curb	On Grade	289PRO	256+33.00	-47	2.52	2.52	5	0	0	10	n/a	8.19	12	11.14	0.22	0.013	0.55

STATE OF TEXAS
HASSAN SAM MOGHADASSI
84231
LICENSED
PROFESSIONAL ENGINEER

H. Moghadassi , P.E. 7/12/11
Signature of Registrant & Date

Texas Department of Transportation
© 2011

SH 289
INLET CALCULATION

SHEET 7 OF 11

DESIGN	FED.RD. DIV.NO.	STATE PROJECT NO.		HIGHWAY NO.
SHM	6	SEE TITLE SHEET		SH 289
GRAPHICS	STATE	DISTRICT	COUNTY	SHEET NO.
TA	TEXAS	DALLAS	COLLIN	
CHECK	CONTROL	SECTION	JOB	
SHM	0091	03	021	203
CHECK				

P-201107-01

INLET - ID	INLET TYPE	PROFILE TYPE	CHAIN	STATION	OFFSET FT	DISCHARGE CFS	CAPACITY CFS	DESIGN FREQUENCY YR	BY PASS FLOW CFS	BY PASS FLOW INTO CFS	CURB LENGTH FT	GRATE LENGTH FT	LENGTH REQUIRED FT	MAX PONDED WIDTH FT	COMPUTED PONDED WIDTH FT	COMPUTED PONDED DEPTH FT	SPREAD "N"	LONGITUDINAL SLOPE %
I 8	Curb	On Grade	289PRO	256+34.00	47	3	3	5	0	0	10	n/a	9.03	12	11.9	0.24	0.013	0.55
I 9	Curb	On Grade	289PRO	258+70.00	-47	1.52	1.52	5	0	0	10	n/a	6.24	12	9.22	0.18	0.013	0.55
I 10	Curb	On Grade	289PRO	258+60.00	47	1.31	1.31	5	0	0	10	n/a	5.77	12	8.72	0.17	0.013	0.55
I 1A	Curb	On Grade	289PRO	248+27.00	-47	1.13	1.13	5	0	0	10	n/a	6.51	12	7.18	0.14	0.013	1.17
I 1B	Curb	On Grade	289PRO	246+54.00	-47	1.36	1.36	5	0	0	10	n/a	7.13	12	7.69	0.15	0.013	1.17
I 2A	Curb	On Grade	289PRO	248+24.00	47	1.13	1.13	5	0	0	10	n/a	6.51	12	7.17	0.14	0.013	1.17
I 2B	Curb	On Grade	289PRO	246+40.00	47	1.46	1.46	5	0	0	10	n/a	7.41	12	7.9	0.16	0.013	1.17
J 1	Curb	On Grade	289PRO	261+03.00	-47	1.63	1.63	5	0	0	10	n/a	7.41	12	8.56	0.17	0.013	0.71
J 2	Curb	On Grade	289PRO	261+09.00	47.63	0.96	0.96	5	0	0	10	n/a	5.69	12	7.03	0.14	0.013	0.71
J 3	Curb	On Grade	289PRO	262+36.00	-47	1.72	1.72	5	0	0	10	n/a	7.62	12	8.74	0.17	0.013	0.71
J 4	Curb	On Grade	289PRO	262+42.00	47	1.04	1.04	5	0	0	10	n/a	5.9	12	7.23	0.14	0.013	0.71
J 5	Curb	On Grade	289PRO	263+81.00	-47	1.78	1.78	5	0	0	10	n/a	7.75	12	8.85	0.18	0.013	0.71
J 6	Curb	On Grade	289PRO	263+59.00	47	0.96	0.96	5	0	0	10	n/a	5.69	12	7.03	0.14	0.013	0.71
J 7	Curb	On Grade	289PRO	265+46.00	-47	2.14	2.14	5	0	0	10	n/a	8.53	12	9.47	0.19	0.013	0.71
J 8	Curb	On Grade	289PRO	265+83.00	47	1.69	1.69	5	0	0	10	n/a	7.54	12	8.67	0.17	0.013	0.71
J 9	Curb	On Grade	289PRO	267+32.00	-47.82	1.47	1.47	5	0	0	10	n/a	7.03	12	8.24	0.16	0.013	0.71
J 10	Curb	On Grade	289PRO	267+27.00	47	1.27	1.27	5	0	0	10	n/a	6.52	12	7.8	0.16	0.013	0.71
J 11	Curb	On Grade	289PRO	268+89.00	-47.35	1.22	1.22	5	0	0	10	n/a	5.57	12	8.52	0.17	0.013	0.41
J 13	Curb	On Grade	289PRO	270+09.00	-48.76	1.51	1.51	5	0	0	10	n/a	6.2	12	9.21	0.18	0.013	0.41
J 14	Curb	On Grade	289PRO	270+02.00	47	2.19	2.19	5	0	0	10	n/a	7.58	12	10.6	0.21	0.013	0.41
J 15	Curb	On Grade	289PRO	271+79.00	-48.38	2.35	2.35	5	0	0	10	n/a	7.87	12	10.88	0.22	0.013	0.41
J 17	Curb	On Grade	289PRO	272+72.00	-47	1.5	1.5	5	0	0	10	n/a	6.19	12	9.19	0.18	0.013	0.41
J 18	Curb	On Grade	289PRO	272+31.00	47	1.78	1.78	5	0	0	10	n/a	6.78	12	9.81	0.2	0.013	0.41
J 19	Curb	On Grade	289PRO	274+08.00	-47	1.73	1.73	5	0	0	10	n/a	6.67	12	9.7	0.19	0.013	0.41
J 20	Curb	On Grade	289PRO	274+09.00	47	1.43	1.43	5	0	0	10	n/a	6.04	12	9.04	0.18	0.013	0.41
J 21	Curb	On Grade	289PRO	275+38.00	-47	1.5	1.5	5	0	0	10	n/a	7.58	12	7.92	0.16	0.013	0.91
J 22	Curb	On Grade	289PRO	275+43.00	47	1.36	1.36	5	0	0	10	n/a	7.22	12	7.64	0.15	0.013	0.91
J 23	Curb	On Grade	289PRO	276+36.00	-47	1.01	1.01	5	0	0	10	n/a	6.24	12	6.84	0.14	0.013	0.91
J 24	Curb	On Grade	289PRO	276+44.00	47	0.96	0.96	5	0	0	10	n/a	6.09	12	6.7	0.13	0.013	0.91
J 25	Curb	On Grade	289PRO	277+56.00	-47	1.29	1.29	5	0	0	10	n/a	7.03	12	7.48	0.15	0.013	0.91
J 26	Curb	On Grade	289PRO	277+69.00	47	1.19	1.19	5	0	0	10	n/a	6.74	12	7.25	0.14	0.013	0.91
J 27	Curb	On Grade	289PRO	279+20.50	-48.6	2.49	2.49	5	0	0	15	n/a	11.1	12	8.74	0.17	0.013	1.48
J 28	Curb	On Grade	289PRO	279+27.00	47	1.47	1.47	5	0	0	10	n/a	8.59	12	7.14	0.14	0.013	1.53
J 29	Curb	On Grade	289PRO	281+20.00	-47.22	4.82	4.82	5	0	0	20	n/a	16.47	12	10.84	0.22	0.013	1.76
J 30	Curb	On Grade	289PRO	280+98.00	47	1.73	1.73	5	0	0	10	n/a	9.66	12	7.39	0.15	0.013	1.76
J 31	Curb	On Grade	289PRO	282+90.00	-47	4.81	4.81	5	0	0	20	n/a	16.46	12	10.83	0.22	0.013	1.76
J 32	Curb	On Grade	289PRO	283+00.00	47	1.92	1.92	5	0	0	10	n/a	10.16	12	7.67	0.15	0.013	1.76
J 33	Curb	On Grade	289PRO	284+82.00	-47	3.75	3.75	5	0	0	20	n/a	16.32	12	8.95	0.18	0.013	2.95
J 34	Curb	On Grade	289PRO	284+93.00	47	1.83	1.83	5	0	0	15	n/a	11.37	12	6.84	0.14	0.013	2.95
J 35	Curb	On Grade	289PRO	286+34.00	-48.51	2.13	2.13	5	0	0	15	n/a	12.25	12	7.24	0.14	0.013	2.95
J 36	Curb	On Grade	289PRO	287+14.00	51.13	1.98	1.98	5	0	0	15	n/a	11.83	12	7.05	0.14	0.013	2.95
J 37	Curb	On Grade	289PRO	288+36.00	-48.08	5.88	5.87	5	0.02	0	20	n/a	20.75	12	10.6	0.21	0.013	2.95
J 38	Curb	On Grade	289PRO	289+17.00	47.01	1.9	1.9	5	0	0	15	n/a	11.58	12	6.94	0.14	0.013	2.95
J 39	Curb	On Grade	289PRO	289+83.00	-47	3.91	3.91	5	0	0.02	20	n/a	16.68	12	9.09	0.18	0.013	2.95
J 40	Curb	On Grade	289PRO	291+29.00	47	1.99	1.99	5	0	0	15	n/a	11.85	12	7.06	0.14	0.013	2.95
J 41	Curb	On Grade	289PRO	291+09.00	-47	3.18	3.18	5	0	0	15	n/a	14.98	12	8.41	0.17	0.013	2.95
J 43	Curb	On Grade	289PRO	292+22.00	-47	3.18	3.18	5	0	0	15	n/a	14.98	12	8.42	0.17	0.013	2.95
J 44	Curb	On Grade	289PRO	293+75.00	47	2.05	2.05	5	0	0	15	n/a	11.82	12	7.23	0.14	0.013	2.76
J 45	Curb	On Grade	289PRO	293+57.00	-47	2.96	2.96	5	0	0	15	n/a	14.39	12	8.23	0.16	0.013	2.9
J 46	Curb	On Grade	289PRO	295+94.00	47	1.85	1.85	5	0	0	15	n/a	10.57	12	7.27	0.15	0.013	2.19
J 47	Curb	On Grade	289PRO	295+73.00	-47	5.72	5.72	5	0	0	20	n/a	19.06	12	11.09	0.22	0.013	2.19
J 48	Curb	On Grade	289PRO	297+69.00	47	1.46	1.46	5	0	0	10	n/a	9.4	12	6.64	0.13	0.013	2.19
J 49	Curb	On Grade	289PRO	297+51.00	-47	4.71	4.71	5	0	0	20	n/a	17.14	12	10.31	0.21	0.013	2.19
J 50	Curb	On Grade	289PRO	299+14.00	47	1.3	1.3	5	0	0	10	n/a	8.91	12	6.37	0.13	0.013	2.19
J 51	Curb	On Grade	289PRO	298+96.00	-47	4.49	4.49	5	0	0	20	n/a	16.7	12	10.13	0.2	0.013	2.19
J 52	Curb	On Grade	289PRO	300+19.00	47	1.01	1.01	5	0	0	10	n/a	7.91	12	5.79	0.12	0.013	2.19
J 53	Curb	On Grade	289PRO	300+00.00	-47	2.95	2.95	5	0	0	15	n/a	13.39	12	8.66	0.17	0.013	2.19
J 54	Curb	On Grade	289PRO	301+42.00	58.42	1.18	1.18	5	0	0	10	n/a	8.51	12	6.15	0.12	0.013	2.19
J 55	Curb	On Grade	289PRO	301+32.00	-47	3.75	3.75	5	0	0	15	n/a	15.16	12	9.47	0.19	0.013	2.19
J 56	Curb	On Grade	289PRO	303+02.00	59	1.57	1.57	5	0	0	10	n/a	9.76	12	6.84	0.14	0.013	2.19
J 57	Curb	On Grade	289PRO	303+02.00	-47	5.11	5.11	5	0	0	20	n/a	17.92	12	10.63	0.21	0.013	2.19

STATE OF TEXAS
HASSAN SAM MOGHADASSI
84231
LICENSED
PROFESSIONAL ENGINEER

H. Moghadassi, P.E. 07/12/11
Signature of Registrant & Date

Texas Department of Transportation
© 2011

SH 289
INLET CALCULATION

SHEET 8 OF 11

DESIGN	FED.RD. DIV.NO.	STATE PROJECT NO.		HIGHWAY NO.
SHM	6	SEE TITLE SHEET		SH 289
GRAPHICS TA	STATE	DISTRICT	COUNTY	SHEET NO.
CHECK SHM	TEXAS	DALLAS	COLLIN	204
CHECK	CONTROL	SECTION	JOB	
	0091	03	021	

P-201107-01

$USER$
$SCALE$

PIPE	DISCHARGE CFS	CAPACITY CFS	UNIFORM DEPTH FT	UNIFORM VELOCITY FPS	CRITICAL DEPTH FT	CRITICAL VELOCITY FPS	ACTUAL VELOCITY D/S FPS	ACTUAL VELOCITY U/S FPS	HGL D/S	HGL U/S	EGL D/S	EGL U/S
LINE A												
LINE A-20	98.61	109.26	3.17	9.24	3.01	9.72	7.9	7.91	705.7	705.77	706.67	706.74
LINE A-19	98.61	109.26	3.17	9.24	3.01	9.72	7.91	8.45	705.77	706.81	706.74	707.92
LINE A-18	98.61	195.04	2.1	14.71	3.01	9.72	11.55	9.59	713.47	718.88	716.73	720.35
LINE A-17	9.07	20.16	0.74	10.52	1.17	6.16	9.91	5.49	722.47	724.47	724	725.05
INE A 9 to	90.02	62.34	3.5	9.6	2.94	10.42	10.42	9.36	721.93	722.99	720.35	724.35
LINE A-16	8.12	18.49	0.73	9.58	1.1	5.82	9.46	5.2	723.87	726.72	725.27	727.25
LINE A-8	85.35	62.34	3.5	9.1	2.88	10.08	8.87	8.87	722.99	723.71	724.35	724.93
LINE A-15	7.01	19.23	0.65	9.51	1.02	5.45	9.45	4.74	726.14	729.81	727.53	730.27
A7S	81.21	68.45	3.5	8.66	2.81	9.8	9.8	8.77	726.53	727.15	724.93	728.35
LINE A-14	5.84	18.86	0.6	8.91	0.93	5.06	8.89	4.32	729.24	733.03	730.47	733.43
LAT6	21.8	71.75	1.18	8.42	1.5	6.16	3.08	3.08	727.15	727.16	728.35	727.3
LINE A-7	60.39	68.45	2.72	7.53	2.44	8.45	6.52	6.58	727.15	727.27	728.35	727.95
LINE A-13	4.31	18.08	0.52	7.96	0.8	4.53	7.96	3.77	732.47	738.78	733.46	739.1
LAT5	21.8	71.75	1.18	8.42	1.5	6.16	3.08	3.24	727.16	727.21	727.3	727.35
LINE A-6	56.37	104.68	1.91	10.48	2.35	8.2	10.24	8.02	728.43	729.95	730.06	731
LINE A-12	3.53	22.47	0.42	8.79	0.72	4.23	8.73	3.13	738.27	741.54	739.47	741.81
LINE A-5	52.58	118.7	1.7	11.34	2.27	7.97	10.89	7.73	730.95	732.87	732.79	733.85
LINE A-11	2.45	16.5	0.41	6.35	0.59	3.78	6.35	3.04	741.03	744.2	741.66	744.42
A4S	48.22	99.21	1.8	9.69	2.17	7.7	9.38	7.61	734.7	735.7	736.07	736.62
LINE A-10	1.05	8.24	0.37	3.05	0.38	2.93	3.05	1.19	743.87	745.17	744.02	745.17
LAT4	18.3	44.12	1.17	8.13	1.45	6.2	5.18	5.44	735.7	735.73	736.62	736.15
LINE A-4	30.22	99.27	1.38	8.57	1.7	6.53	4.79	5.6	735.7	735.78	736.62	736.13
LAT3	18.3	44.12	1.17	8.13	1.45	6.2	7.91	4.01	735.31	736.97	736.28	736.97
LINE A-3	24.94	43.46	1.42	8.66	1.7	7.01	8.61	6.79	738.87	740.41	740.02	741.17
LINE A-2	19.38	51.85	1.1	9.26	1.49	6.34	9.19	6	739.77	742.08	741.08	742.71
A1S	14.74	34.33	0.96	9.95	1.38	6.36	9.21	6.12	741.53	742.82	742.86	743.45
LAT2	12.88	24.34	1.08	7.46	1.29	6	5.36	5.61	742.82	742.86	743.45	743.31
LINE A-1	1.86	34.34	0.33	5.54	0.47	3.27	5.54	1.19	741.71	744.6	742.19	744.6
LAT1	12.88	24.34	1.08	7.46	1.29	6	7.14	4.1	742.61	743.82	743.4	743.82
LINE BS1												
LINE B-J1	2.33	18.71	0.37	6.85	0.58	3.72	6.15	3.72	744.50	745.12	745.15	745.38
LINE B-1	2.33	18.6	0.37	6.82	0.58	3.72	6.81	2.39	744.91	744.27	745.71	749.36
LINE BN1												
LINE B-J2	3.24	19.33	0.43	7.71	0.69	4.11	6.89	4.11	744.57	745.34	745.19	745.5
LINE B-2	3.24	19.32	0.43	7.71	0.69	4.11	7.65	2.6	745.09	747.63	745.85	747.56
LINE BS2												
LINE B-J3	2.91	20.58	0.4	7.82	0.65	3.98	6.83	3.98	744.02	744.76	744.64	744.91
LINE B-3	2.91	20.57	0.4	7.82	0.65	3.98	7.82	2.52	744.5	749.83	745.31	749.78
LINE BN2												
LINE B-J4	2.67	22.8	0.36	8.21	0.62	3.88	7.17	3.88	743.98	744.85	744.62	744.95
LINE B-4	2.67	22.81	0.36	8.21	0.62	3.88	8.17	2.47	744.59	747.97	745.4	747.9
LINE BS3												
L. B-DROP2	32.67	44.12	1.69	9.27	1.95	7.97	8.41	6.66	746.41	748.03	747.5	748.03
LINE BN3												
L. B-DROP3	32.67	44.12	1.69	9.27	1.95	7.97	8.41	6.66	746.41	748.03	747.5	748.03
LINE CS1												
LINE C-J10	55.21	96.99	2.26	7.55	2.23	7.65	6.96	7.09	719.72	719.74	720.47	720.52
LN C-J10C	55.21	96.99	2.26	7.55	2.23	7.65	7.09	7.5	719.74	719.97	720.52	720.85
LN C-J10b	55.21	96.99	2.26	7.55	2.23	7.65	7.5	7.5	719.97	720.33	720.85	721.21
LINE C-10	43.25	67.93	2.13	7.05	2.05	7.39	6.55	7.02	720.33	720.9	721.21	721.67
LN C-J10a	11.96	55.64	0.65	13.39	1.24	5.83	3.81	4.13	720.33	720.36	721.21	720.59
LINE C-11	39.13	61.09	1.83	8.69	2.04	7.66	8.66	7.51	720.59	722.34	721.76	723.26
LINE C-10a	11.96	55.66	0.65	13.39	1.24	5.83	4.13	3.86	720.36	720.94	720.59	720.94
LINE C-11a	37.61	61.09	1.78	8.6	2	7.53	8.07	5.32	723.16	724.49	724.17	724.49
LINE CN2												
LINE C-J20	13.59	27.41	0.78	14.65	1.37	8.03	10.94	8.03	720.71	721.86	722.58	722.86
LINE C-20	13.59	27.42	0.78	14.65	1.37	8.03	10.59	7.69	721.51	722.47	723.26	723.48
LINE C-19	12.53	17.9	0.97	10.35	1.33	7.54	10.28	7.14	721.93	725.69	723.58	726.58
LINE C-18	10.56	14.93	0.98	8.64	1.25	6.72	8.64	6.35	725.21	729.84	726.37	730.54
LINE C-17	8.56	14.3	0.87	8	1.13	5.98	7.99	5.59	729.38	733.64	730.37	734.2
LINE C-16	6.87	15.81	0.72	8.19	1.01	5.4	8.17	4.89	733.15	737.55	734.19	738.01
LINE C-15	6.09	17.66	0.63	8.6	0.95	5.14	8.53	4.49	737.08	739.67	738.21	740.08
LINE C-14	4.62	18.29	0.53	8.18	0.83	4.64	8.18	3.88	739.12	743.29	740.17	743.63
LINE C-13	3.17	18.35	0.44	7.39	0.68	4.09	7.38	3.26	742.77	746.28	743.63	746.54
LINE C-12	1.71	17.67	0.33	6.01	0.49	3.39	6.01	1.94	745.8	749.4	746.36	749.45
LINE CS2												
LINE C-J21	5.64	7.52	1.02	4.39	0.92	4.99	4.99	4.58	719.92	720.04	720.42	720.37
LINE C-21	5.64	7.52	1.02	4.39	0.92	4.99	4.58	4.34	720.04	721.29	720.37	721.59
LINE C-22	1.52	7.87	0.46	3.28	0.46	3.27	3.28	1.72	720.72	722.02	720.89	722.02
LINE CN1												
LINE C-J9	70.2	359.14	1.25	21.04	2.53	8.37	6.17	7.90	722.2	722.23	722.79	722.23
LINE C-9	70.2	358.96	1.25	21.04	2.53	8.37	11.73	7.88	721.49	722.62	723.63	722.62
LINE C-8	66.69	160.72	1.87	11.57	2.47	8.2	11.48	8.00	722.84	726.69	724.89	726.69
LINE C-7	62.54	125.12	1.83	11.30	2.48	8.58	11.99	8.34	726.56	729.45	728.79	729.45
LINE C-6	54.47	122.43	1.71	11.69	2.31	8.09	11.22	7.84	729.17	731.26	731.13	731.26
LINE C-7a	3.73	7.15	0.80	3.88	0.74	4.31	4.31	3.96	729.64	729.71	730.60	729.71
LINE C-5	45.49	121.13	1.55	11.10	2.1	7.53	10.92	7.27	730.95	733.85	732.81	733.85
LINE C-6a	3.8	7.15	0.81	3.88	0.75	4.34	4.34	3.98	731.63	731.70	732.28	731.70
LINE C-4	13.06	20.25	0.92	11.52	1.35	7.78	11.45	7.39	734.61	740.08	736.65	740.08

PIPE	DISCHARGE CFS	CAPACITY CFS	UNIFORM DEPTH FT	UNIFORM VELOCITY FPS	CRITICAL DEPTH FT	CRITICAL VELOCITY FPS	ACTUAL VELOCITY D/S FPS	ACTUAL VELOCITY U/S FPS	HGL D/S	HGL U/S	EGL D/S	EGL U/S
LINE C-5a	***31.23	106.34	1.16	12.41	1.81	7	5.71	4.58	733.85	734.77	734.73	734.77
LINE C-3	10.17	17.69	0.85	9.79	1.23	6.57	9.73	6.07	739.43	742.94	740.9	742.94
LINE C-2	6.86	18.32	0.66	9.11	1.01	5.4	9.09	4.74	742.25	746.15	743.54	746.15
LINE C-1	3.36	18.21	0.45	7.46	0.7	4.16	7.45	2.63	745.46	748.73	746.33	748.73
LINE DN 1												
LN DN 8	14.09	61.66	0.68	15.09	1.35	6.23	10.49	5.53	718.31	719.64	720.03	720.24
LN DN 6	11.71	15.19	1.38	5.07	1.23	5.78	4.59	4.83	719.64	719.94	720.24	720.32
LN DN 4	10.53	18.87	1.11	5.85	1.16	5.56	5.85	5.39	719.62	720.57	720.15	721.05
LN DN2A	9.35	19.92	1	5.91	1.09	5.33	5.89	5.23	720.38	720.76	720.92	721.2
LN DN 2	1.88	19.92	0.43	3.8	0.47	3.29	3.8	1.2	720.08	721.35	720.3	721.35
LAT DN-D11A	7.47	16.05	1	4.77	0.97	4.94	4.18	4.29	720.76	720.77	721.2	721.05
LAT DN-D11	7.47	16.14	1	4.77	0.97	4.94	4.29	3.12	720.77	721.15	721.05	721.15
LINE DN 2												
LN JT D2	4.29	27	0.42	10.6	0.79	4.52	8.51	4.52	716.99	718.09	718.12	718.41
LN DN 5	4.29	27	0.42	10.6	0.79	4.52	9.75	3.7	717.75	719.86	719.23	720.18
LN DN 3	3.11	9.23	0.63	4.44	0.67	4.07	4.44	3.82	719.55	720.61	719.86	720.86
LN DN 1	1.93	9.25	0.48	3.91	0.52	3.51	3.91	2.18	720.39	721.62	720.62	721.62
LINE DS												
LN JTDS 1	17.56	27.6	1.52	5.61	1.42	6.11	4.9	5.02	716.18	716.21	716.55	716.6
LN DS 1	17.56	27.53	1.52	5.61	1.42	6.11	5.02	5.13	716.21	716.25	716.6	716.67
LN MH DS	15.23	27.55	1.39	5.42	1.32	5.81	4.45	5.37	716.25	716.83	716.67	717.29
LN DS 3	15.23	27.55	1.39	5.42	1.32	5.81	5.37	5.32	716.83	717.73	717.29	718.19
LN DS 2	7.61	11.69	0.92	6.67	1.07	5.65	6.64	5.48	717.75	718.79	718.43	719.29
LN DS 5	3.81	14.16	0.55	6.45	0.75	4.34	6.45	3.89	716.87	719.71	717.52	720
LN DS 4	3.76	8.76	0.72	4.53	0.74	4.32	4.53	4.14	718.41	719.49	718.73	719.78
LN DS 7	2.31	10.77	0.49	4.62	0.57	3.71	4.62	2.39	719.38	721.11	719.72	721.13
LN DS 6	2.25	10.76	0.48	4.57	0.57	3.68	4.57	2.37	719.21	720.95	719.54	720.97
LINE E 1												
E23	36.56	195.45	1.22	11.3	1.8	6.66	2.91	2.91	722.5	722.51	722.63	722.64
E11	36.56	195.45	1.22	11.3	1.8	6.66	2.91	2.98	722.51	722.55	722.64	722.68
E10	35.56	129.47	1.49	8.35	1.78	6.6	2.89	3.73	722.55	722.63	722.68	722.76
EJ4E11	34.58	120.78	1.33	10.26	1.82	6.83	4.14	4.98	722.63	722.68	722.76	722.95
E8tJ4	33.95	122.38	1.31	10.34	1.81	6.78	9.92	6.64	721.66	723.47	723.19	724.19
EJ3J4	0.62	28.39	0.21	3.49	0.27	2.42	0.22	0.23	722.68	722.68	722.95	722.69
E7	29.27	102.15	1.14	11.82	1.75	6.83	11.56	6.38	728.47	732.1	730.56	732.83
EGRJT3	0.62	28.39	0.21	3.49	0.27	2.42	0.23	0.27	722.68	722.68	722.69	722.69
E6	25.06	36.34	1.28	11.77	1.76	8.55	11.63	8.19	734.08	737.89	736.19	739.03
E5	20.55	39.16	1.07	11.95	1.63	7.51	11.78	7.03	737.11	741.53	739.27	742.41
E4	16.83	40.28	0.94	11.59	1.48	6.76	11.47	6.19	742.86	747.5	744.91	748.21
E3	13.12	34.01	0.9	9.59	1.3	6.05	9.53	5.58	746.78	750.11	748.2	750.68

NOTE:

*** GRATE INLET C5-E DESIGN CAPACITY IS THE PROPOSED DISCHARGE FROM THE CELINA HIGH SCHOOL THAT DRAINS TO DETENTION POND-2. THE PROPOSED DISCHARGE FOR THE CELINA HIGH SCHOOL DETENTION POND-2 WAS OBTAINED FROM CELINA HIGH SCHOOL PROJECT NUMBER RLK 06076 SHEET C12a OF 32 APPROVED FOR CONSTRUCTION ON 04/03/07.

GRATE INLET C5-E DESIGN CAPACITY > CELINA HIGH SCHOOL PROPOSED DISCHARGE TO POND-2 = 73.64 CFS > 72.90 CFS
THIS WILL ONLY OCCUR IF POND IS NOT FUCTIONING CORRECTLY OTHERWISE THE DISCHARGE TO INLET C5-E WILL BE, DRAINAGE AREA C5-E + POND-2 MAX. 5 YEAR RELEASE
=17.03 CFS+14.2 CFS
=31.23 CFS

GRATE INLET B-DROP, B-DROP2, B-DROP3 TOTAL DESIGN CAPACITY TOGETHER IS THE 25 YEAR DISCHARGE FROM DRAINAGE AREA B, SEE 'DRAINAGE AREA & COMPUTATION' SHEET 179. THIS WILL ONLY OCCUR IF POND-1 FROM THE CELINA HIGH SCHOOL IS NOT FUCTIONING CORRECTLY OTHERWISE THE DISCHARGE SHOWN IS WHAT THE INLETS WILL DRAIN.

SCHOOL PROJECT NUMBER RLK 06076 SHEET C12a OF 32 APPROVED FOR CONSTRUCTION ON 04/03/07.

STATE OF TEXAS
CHRISTOPHER P. ROCHA
107690
LICENSED
PROFESSIONAL ENGINEER

STATE OF TEXAS
HASSAN SAM MOGHADASSI
84231
LICENSED
PROFESSIONAL ENGINEER

Chris Rocha ,P.E. 7/20/11 H.M. Moghadassi ,P.E. 7/20/11
Signature of Registrant & Date Signature of Registrant & Date

$FILES$

Texas Department of Transportation
© 2011

SH 289
STORM SEWER CALCULATION

SHEET 9 OF 11

DESIGN	FED.RD. DIV.NO.	STATE PROJECT NO.		HIGHWAY NO.
SHM	6	SEE TITLE SHEET		SH 289
GRAPHICS	STATE	DISTRICT	COUNTY	SHEET NO.
TA	TEXAS	DALLAS	COLLIN	205
CHECK	CONTROL	SECTION	JOB	
SHM	0091	03	021	
CHECK				

P-201107-01

$FILEABBREV$

$DATE$
$FILE$

PIPE	DISCHARGE CFS	CAPACITY CFS	UNIFORM DEPTH FT	UNIFORM VELOCITY FPS	CRITICAL DEPTH FT	CRITICAL VELOCITY FPS	ACTUAL VELOCITY D/S FPS	ACTUAL VELOCITY U/S FPS	HGL D/S	HGL U/S	EGL D/S	EGL U/S
E3	13.12	34.01	0.9	9.59	1.3	6.05	9.53	5.58	746.78	750.11	748.2	750.68
E2	8.16	30.38	0.74	7.77	1.02	5.08	7.76	4.63	749.51	752.13	750.45	752.53
EJ2†E3	3.93	31.98	0.49	6.56	0.7	4.05	6.56	3.73	751.46	753.52	752.14	753.78
E1†J2	2.27	32.55	0.37	5.66	0.52	3.46	5.65	1.44	753.15	755.4	753.65	755.4
EJ1J2	1.67	24.34	0.37	4.22	0.45	3.18	1.58	2.12	753.52	753.53	753.78	753.57
ESJNT1	1.67	24.34	0.37	4.22	0.45	3.18	4.19	1.06	753.3	754.31	753.58	754.31
LINE E 2												
E22	12.49	73.83	0.72	10.64	1.19	5.44	2.55	2.55	721.7	721.71	721.8	721.81
E21	12.49	73.83	0.72	10.64	1.19	5.44	2.55	2.82	721.71	721.77	721.81	721.87
E20	11.31	29.13	0.9	8.22	1.21	5.71	8.2	5.33	720.56	723.01	721.61	723.52
E19	10.13	31.29	0.81	8.43	1.14	5.48	8.4	5.04	722.55	725.35	723.65	725.82
E18	8.96	48.49	0.6	11.18	1.07	5.25	11.14	4.27	724.74	731.15	726.67	731.58
E17	7.77	21.27	0.65	10.52	1.08	5.7	10.48	4.91	732.52	738.26	734.23	738.76
E16	6.59	21.2	0.6	10.05	0.99	5.31	10.01	4.46	737.65	743.33	739.21	743.76
E15	5.41	17.38	0.6	8.23	0.9	4.91	8.22	4.25	742.7	746.55	743.76	746.93
E14	4.23	16.39	0.54	7.38	0.79	4.5	7.36	3.86	746.08	749.48	746.92	749.79
E13	3.04	14.9	0.48	6.29	0.66	4.03	6.29	3.44	749.06	751.86	749.68	752.11
E12	1.64	15.17	0.35	5.34	0.48	3.36	5.34	1.86	751.45	755.37	751.9	755.37
LINE F												
F6†OUT	6.73	15.39	0.97	4.47	0.92	4.77	2.14	2.26	754.1	754.14	754.17	754.22
F3	4.14	20.32	0.64	4.8	0.71	4.11	1.39	2.17	754.14	754.17	754.22	754.2
F5	1.66	20.61	0.3	6.65	0.49	3.35	6.64	2.26	752.64	756.65	753.33	756.83
F2	3.35	14.67	0.67	3.6	0.64	3.86	1.75	2.81	754.17	754.21	754.2	754.34
F4	0.71	10.31	0.28	3.17	0.31	2.64	3.17	0.8	756.28	757.72	756.43	757.72
F1	2.57	15.55	0.57	3.46	0.56	3.59	2.15	3.3	754.21	754.47	754.34	754.66
FJ2TOF1	2.04	15.39	0.51	3.21	0.5	3.37	2.62	3.12	754.47	754.62	754.66	754.78
FJ1†J2	2.04	15.39	0.51	3.21	0.5	3.37	3.37	3.24	754.64	754.68	754.78	754.84
FGI†J1	2.04	15.39	0.51	3.21	0.5	3.37	3.24	1.3	754.68	755.27	754.84	755.27
LINE GN 1												
GN28AA	43.25	132.55	1.43	11.69	2.05	7.39	4.5	4.55	710.81	710.83	711.12	711.14
GN27A	43.25	132.55	1.43	11.69	2.05	7.39	4.55	6.2	710.83	710.95	711.14	711.27
GN13	42.22	143.60	1.35	12.00	2.02	7.32	12.00	6.96	715.16	719.65	717.46	720.45
GN12	38.62	88.37	1.45	11.45	2.02	7.62	11.14	7.31	722.27	724.94	724.2	725.84
GN11	35.06	35.38	2.27	7.48	2.01	8.29	8.29	7.58	728.59	729.49	725.84	730.4
GN10	31.7	33.98	1.64	11.48	1.89	10.32	11.41	10.1	732.78	736.13	734.8	737.79
GN9	28.12	27.71	2	9.18	1.83	9.33	9.33	8.95	738.02	739.75	737.79	740.99
GNS†9	24.19	31.49	1.39	10.41	1.74	8.34	9.99	8.18	742.94	744.19	744.5	745.27
GNSJ4	1.71	24.34	0.37	4.23	0.45	3.2	0.58	0.61	744.19	744.19	745.27	744.2
GN8†S2	22.7	31.32	1.33	10.26	1.7	7.99	9.89	7.83	743.78	745.19	745.3	746.18
GNSJ3	1.71	24.34	0.37	4.23	0.45	3.2	0.61	0.84	744.19	744.2	744.2	744.2
GN7	18.61	39.44	1.01	11.72	1.55	7.11	11.45	6.59	747.1	750.72	749.14	751.51
GNS†7	14.54	38.87	0.88	10.86	1.37	6.32	10.15	6.01	751.12	753.04	752.72	753.66
GNSJ2	0.5	24.34	0.2	2.94	0.25	2.2	0.21	0.23	753.04	753.04	753.66	753.04
GN6†S1	14.05	39.32	0.86	10.88	1.35	6.23	10.29	5.91	752.5	754.7	754.14	755.3
GNSJ1	0.5	24.34	0.2	2.94	0.25	2.2	0.23	0.32	753.04	753.21	753.04	753.21
GN5	10.42	21.36	0.77	11.38	1.24	6.66	11.27	6.02	754.07	758.82	756.05	759.51
GN4	6.96	15.63	0.73	8.13	1.02	5.43	8.1	4.93	758.13	760.72	759.16	761.17
GN3	3.99	12.47	0.61	5.94	0.76	4.41	5.94	4	760.21	761.83	760.76	762.13
GN2	3.09	7.15	0.72	3.71	0.67	4.06	3.1	3.56	761.83	762.2	762.13	762.41
GN1	2.16	13.77	0.42	5.39	0.56	3.63	5.39	3.07	761.87	763.73	762.33	763.93
GN1A†1	1.2	13.38	0.31	4.44	0.41	3.08	4.44	1.35	763.41	765.53	763.72	765.53
LINE GN 2												
GN28	15.74	101.47	0.83	9.89	1.27	5.55	2.25	2.38	710	710.01	710.08	710.08
GN27	15.74	101.47	0.83	9.89	1.27	5.55	9.43	5.27	708.21	710.11	709.59	710.59
GN26	14.04	44.89	0.8	11.98	1.35	6.22	11.95	5.48	713.8	721.67	716.03	722.27
GN25	12.93	39.92	0.81	10.76	1.29	6.01	10.65	5.39	722.58	726.82	724.35	727.39
GN24	11.73	47.41	0.7	11.86	1.23	5.79	11.81	4.92	726.1	732.96	728.28	733.48
GN23	10.87	16.02	0.95	9.2	1.26	6.84	9.1	6.44	734.89	737.07	736.18	737.79
GN22	9.92	19.57	0.79	10.52	1.21	6.47	10.42	5.88	736.5	740.51	738.19	741.16
GN21	8.95	22.6	0.68	11.42	1.16	6.12	11.32	5.32	741.44	746.71	743.44	747.29
GN20	8.01	22.34	0.65	10.99	1.1	5.79	10.92	4.95	746	751.14	747.86	751.66
GN19	7.06	21.8	0.61	10.44	1.03	5.46	10.37	4.61	750.46	755.34	752.14	755.81
GN18	6.11	19.32	0.6	9.19	0.96	5.14	9.15	4.39	754.73	758.59	756.04	759
GN17	5.17	13.92	0.66	6.9	0.88	4.83	6.89	4.37	758.15	760.19	758.89	760.55
GN16	4.22	12.64	0.62	6.1	0.79	4.5	6.09	4.09	759.86	761.52	760.44	761.84
GN15	3.28	13	0.53	5.82	0.69	4.13	5.82	3.67	761.21	762.95	761.73	763.22
GN14	2.2	7.15	0.59	3.37	0.56	3.65	2.46	3.23	762.95	763.39	763.22	763.57
GN1414	1.39	16.93	0.3	5.5	0.44	3.2	5.49	1.57	763.08	765.44	763.55	765.44
LINE GS 1												
GS38-I	40.78	71.75	1.69	9.91	2.08	7.8	8.63	7.8	709.46	709.74	710.62	710.68
GS38	40.78	71.75	1.69	9.91	2.08	7.8	9.05	7.7	709.48	710	710.76	710.94
GS37	38.28	57.97	1.56	11.9	2.09	8.73	11.64	8.44	710.85	713.69	712.96	714.87
GS36G2	37.1	39.86	2.05	8.6	2.06	8.57	8.18	8.32	713.69	714.39	714.87	715.43

PIPE	DISCHARGE CFS	CAPACITY CFS	UNIFORM DEPTH FT	UNIFORM VELOCITY FPS	CRITICAL DEPTH FT	CRITICAL VELOCITY FPS	ACTUAL VELOCITY D/S FPS	ACTUAL VELOCITY U/S FPS	HGL D/S	HGL U/S	EGL D/S	EGL U/S
GS36GI	10.48	39.86	0.91	6.51	1.08	5.14	2.35	2.89	714.39	714.42	715.43	714.51
GS1GI51	26.62	44.12	1.47	8.89	1.76	7.21	5.97	6.09	714.39	714.42	715.43	714.98
GS35	9.3	22.56	0.7	11.51	1.18	6.24	11.46	5.47	714.4	720.86	716.45	721.47
GS1GI50	26.62	44.12	1.47	8.89	1.76	7.21	6.09	5.42	714.42	715.35	714.98	715.35
GS34	8.31	19.45	0.71	10.02	1.12	5.89	9.99	5.23	720.2	725.04	721.75	725.58
GS33	7.13	24.25	0.58	11.32	1.03	5.49	11.28	4.49	724.36	731.72	726.34	732.19
GS32	5.95	21.74	0.56	9.95	0.94	5.09	9.94	4.18	731.01	736.95	732.55	737.35
GS31	4.77	21.49	0.5	9.28	0.84	4.69	9.27	3.73	736.32	742.09	737.66	742.43
GS30	3.6	18.61	0.46	7.73	0.72	4.26	7.72	3.43	741.53	745.86	742.46	746.14
GS29	2.42	17.87	0.39	6.7	0.59	3.76	6.69	2.41	745.39	749.46	746.09	749.56
LINE GS 2												
GS48-I	16.69	91.05	0.6	10.47	1.03	5.12	2.66	2.69	710	710.02	710.11	710.13
GS48	16.69	91.05	0.6	10.47	1.03	5.12	2.69	4.12	710.02	710.05	710.13	710.16
GS47	14.19	32.39	0.97	9.44	1.36	6.25	9.37	5.84	709.79	712.57	711.15	713.17
GS46	13.01	36.6	0.86	10.11	1.3	6.03	10.04	5.49	711.98	715.81	713.55	716.38
GS45	11.84	46.19	0.72	11.67	1.24	5.81	11.61	4.98	715.12	721.04	717.22	721.57
GS44	10.66	21.76	0.77	11.59	1.25	6.76	11.54	6.12	720.4	726.44	722.48	727.15
GS43G2	9.48	24.01	0.68	12.13	1.19	6.31	10.88	5.88	725.74	727.9	727.59	728.52
GS43G1	7.14	23.95	0.58	11.21	1.03	5.49	11.07	5	727.21	731.69	729.12	732.16
GSLGI51	2.34	12.24	0.46	5.05	0.58	3.72	1.45	1.53	727.9	727.9	728.52	727.94
GS42	5.96	21.07	0.57	9.73	0.94	5.1	9.72	4.23	731.13	736.72	732.6	737.12
GSLGI50	2.34	11.3	0.48	4.78	0.58	3.72	1.53	1.62	727.9	727.91	727.94	727.94
GS41	4.79	21.81	0.5	9.39	0.84	4.69	9.38	3.71	736.1	742.03	737.47	742.37
GS40	3.6	18.77	0.46	7.79	0.72	4.26	7.77	3.42	741.46	745.86	742.41	746.14
GS39	2.43	20.51	0.36	7.4	0.59	3.76	7.4	2.41	745.36	750.61	746.22	750.75
LINE H												
LN H2	0.97	35.55	0.18	8.32	0.37	2.91	7.62	1.1	761.29	762.82	762.2	762.82
LN H1	1.18	31.96	0.2	8.18	0.41	3.04	8.04	1.33	763.01	765.8	764.02	765.8
LN H4	1.02	44.36	0.16	9.84	0.38	2.9	9.49	1.12	759.77	762.74	761.19	762.87
LN H3	1.1	21.56	0.24	6.07	0.39	3.02	6.07	1.25	764.74	769.07	765.32	769.07
LINE I 1												
LN I2B	13.07	21.82	0.88	12.2	1.35	7.79	11.99	7.48	760.52	764.99	762.76	765.94
LN I 2A	11.61	12.38	1.24	7.41	1.3	7.14	7.41	6.9	770.81	773.07	771.67	773.87
LN I2	10.48	11.3	1.23	6.75	1.24	6.69	6.75	6.46	772.95	774.36	773.66	775.06
LN I4	8.73	11.3	1.05	6.64	1.14	6.04	6.64	5.79	774.11	776.33	774.8	776.9
LN I6	6.82	12.24	0.84	6.74	1.01	5.38	6.73	5.1	775.97	778.15	776.68	778.6
LN I8	4.3	12.24	0.64	6.01	0.8	4.52	6.01	4.2	777.73	780.46	778.29	780.78
LN I10	1.31	9.98	0.38	3.72	0.43	3.14	3.7	1.48	780	781.84	780.21	781.84
LINE I 2												
LN IB	13.05	64.38	0.63	15.24	1.3	6.04	11.98	5.25	764.98	767.2	767.21	767.77
LN I1A	11.69	26.68	0.97	7.76	1.23	5.78	7.76	5.47	770.37	772.71	771.31	773.23
LN I1	10.56	14.2	1.01	8.3	1.25	6.72	8.28	6.38	772.44	774.83	773.51	775.54
LN I3	8.53	12.37	0.96	7.12	1.13	5.97	7.12	5.67	774.47	777.18	775.26	777.73

STATE OF TEXAS
HASSAN SAM MOGHADASSI
84231
LICENSED
PROFESSIONAL ENGINEER

H. Moghadassi ,P.E. 07112011
Signature of Registrant & Date

Texas Department of Transportation
© 2011

SH 289
STORM SEWER CALCULATION

SHEET 10 OF 11

DESIGN	FED.RD. DIV.NO.	STATE PROJECT NO.		HIGHWAY NO.
SHM	6	SEE TITLE SHEET		SH 289
GRAPHICS	STATE	DISTRICT	COUNTY	SHEET NO.
TA	TEXAS	DALLAS	COLLIN	206
CHECK	CONTROL	SECTION	JOB	
SHM	0091	03	021	
CHECK				

P-201107-01

PIPE	DISCHARGE CFS	CAPACITY CFS	UNIFORM DEPTH FT	UNIFORM VELOCITY FPS	CRITICAL DEPTH FT	CRITICAL VELOCITY FPS	ACTUAL VELOCITY D/S FPS	ACTUAL VELOCITY U/S FPS	HGL D/S	HGL U/S	EGL D/S	EGL U/S
LN I5	6.55	13.33	0.78	7.1	0.99	5.29	7.1	4.96	776.76	779.35	777.55	779.78
LN I7	4.03	9.69	0.7	4.95	0.77	4.42	4.95	4.21	779	780.68	779.38	780.98
LN I9	1.52	9.18	0.43	3.64	0.46	3.28	3.64	1.72	780.33	781.95	780.54	781.95
LINE J1												
LN J57	104.8	108.23	3.03	11.85	3.12	11.57	11.85	11.5	711.37	712.45	713.55	714.53
LN J55A	100.6	108.23	2.87	11.9	3.08	11.23	11.86	11.16	712.77	714.14	714.96	716.1
LN J55	94.37	108.23	2.7	11.87	3	10.75	11.56	10.67	713.8	714.56	715.88	716.36
LN J3-S	6.8	65.27	0.45	12.77	0.92	4.79	2.16	2.78	714.14	714.15	716.1	714.23
LN J53	91.45	108.23	2.62	11.85	2.96	10.53	11.72	10.38	715.98	717.61	718.11	719.33
LN J51	89.1	113.51	2.46	12.31	2.93	10.35	11.95	10.19	719	720.54	721.22	722.21
LN J49A	85.13	111.32	2.41	12.04	2.87	10.07	11.58	9.99	721.25	722.5	723.34	724.07
LN J49	78.97	111.43	2.28	11.87	2.78	9.64	11.22	9.56	722	723.04	723.96	724.48
LN J2-S	6.61	68.83	0.43	13.15	0.91	4.74	2.1	2.41	722.5	722.51	724.07	722.58
LN J47	75.13	78.6	2.55	11.72	2.72	11.15	11.72	10.99	724.92	727.22	727.06	729.16
LN J45A	69.91	78.6	2.35	11.75	2.66	10.56	11.62	10.47	728.72	730.3	730.82	732.03
LN J45	57.94	78.6	2.01	11.49	2.46	9.33	11.17	9.22	729.67	731.36	731.61	732.71
LN J1-S	12.34	68.83	0.6	15.74	1.26	5.9	3.93	3.95	730.3	730.46	732.03	730.57
LN J43	54.98	55.81	2.22	11.94	2.35	11.47	11.88	11.28	734.08	736.37	736.28	738.41
LN J41	51.8	55.81	2.04	12.06	2.32	10.9	11.9	10.69	737.44	739.5	739.64	741.34
LN J39	48.62	56.68	1.9	12.16	2.28	10.35	11.98	10.12	740.69	743.12	742.92	744.78
LN J37	44.73	57.53	1.75	12.18	2.22	9.71	11.99	9.45	744.27	747.21	746.5	748.67
LN J35	38.85	58.37	1.57	11.99	2.1	8.81	11.91	8.52	748.25	752.31	750.45	753.52
LN J33	36.72	36.91	1.82	12.24	1.93	11.81	11.99	11.69	754.71	758.25	756.94	760.42
LN J31	32.97	35.26	1.65	11.89	1.9	10.69	11.85	10.49	759.09	763.37	761.28	765.14
LN J29	28.16	36.08	1.4	11.98	1.83	9.34	11.86	9.04	762.78	766.93	764.97	768.28
LN J27	23.34	32.28	1.33	10.54	1.72	8.13	10.52	7.82	766.32	770.22	768.04	771.25
LN J25	20.85	25.5	1.45	8.53	1.64	7.58	8.51	7.36	769.87	771.87	771	772.77
LN J23	19.56	23.67	1.47	7.92	1.59	7.3	7.91	7.11	771.65	772.92	772.62	773.75
LN J21	18.54	23.78	1.4	7.89	1.55	7.1	7.87	6.89	772.68	773.77	773.65	774.56
LN J19	17.04	18.44	1.64	6.17	1.49	6.8	6.33	6.13	773.77	774.56	774.56	775.16
LN J17	15.31	15.8	1.76	5.23	1.41	6.46	5.51	5.33	774.56	775.18	775.16	775.63
LN J15	13.81	15.36	1.58	5.18	1.34	6.18	4.8	4.91	775.18	775.49	775.63	775.87
LN J13	11.47	15.64	1.35	5.09	1.22	5.74	4.08	4.88	775.49	775.9	775.87	776.28
LN J11	9.96	16.41	1.17	5.2	1.13	5.45	4.24	5.05	775.9	776.23	776.28	776.64
LN J9	8.74	18.06	1.03	5.38	1.05	5.2	5.38	5.04	776.05	776.95	776.5	777.38
LN J7	7.26	12.51	0.86	6.95	1.04	5.53	6.94	5.2	776.73	779.2	777.48	779.67
LN J5	5.13	8.61	0.87	4.83	0.87	4.81	4.83	4.63	778.96	779.92	779.32	780.28
LN J3	3.35	9.68	0.63	4.73	0.7	4.16	4.73	3.89	779.65	780.78	780	781.05
LN J1	1.63	9.59	0.43	3.84	0.48	3.34	3.84	1.84	780.48	781.72	780.71	781.72
LINE J2												
LN J56	35.47	35.52	1.88	11.58	1.92	11.43	11.49	11.31	709.11	712.79	711.16	714.82
LN J54	34.29	35.68	1.71	12	1.91	11.08	11.94	10.91	712.58	716.23	714.8	718.13
LN J52	33.4	35.68	1.65	12.05	1.91	10.82	11.91	10.63	715.94	718.82	718.14	720.64
LN J50	32.62	36.09	1.59	12.17	1.9	10.59	11.96	10.38	719.11	721.69	721.33	723.43
LN J48	31.63	35.93	1.55	12.07	1.89	10.3	11.98	10.07	721.25	724.73	723.48	726.38
LN J46	30.53	35.93	1.5	12.05	1.87	9.99	11.98	9.73	724.28	728.46	726.51	730.01
LN J44	29.09	36.09	1.44	12.04	1.85	9.59	11.98	9.31	727.92	733.14	730.15	734.57
LN J40	27.46	36.5	1.36	12.03	1.82	9.16	11.99	8.84	733.19	739.17	735.43	740.48
LN J38	25.67	37.15	1.28	12.05	1.78	8.7	11.99	8.34	740.02	745.44	742.25	746.62
LN J36	23.77	38.01	1.2	12.07	1.73	8.24	12	7.83	746.25	751.73	748.49	752.79
LN J34	21.79	38.48	1.13	11.94	1.67	7.78	11.9	7.34	751.75	757.81	753.95	758.75
LN J32	19.96	38.48	1.07	11.71	1.6	7.39	11.63	6.91	758.07	763.43	760.18	764.28
LN J30	18.04	33.26	1.1	10.23	1.53	7	10.19	6.61	762.8	767	764.41	767.76
LN J28	16.31	32.58	1.05	9.82	1.46	6.66	9.77	6.26	766.43	769.9	767.91	770.59
LN J26	14.84	25.86	1.14	8.05	1.39	6.37	8.03	6.11	769.49	771.51	770.49	772.14
LN J24	13.65	23.86	1.14	7.4	1.33	6.15	7.4	5.91	771.2	772.58	772.05	773.17
LN J22	12.69	23.98	1.08	7.35	1.28	5.97	7.3	5.72	772.29	773.46	773.12	774.01
LN J20	11.32	18.84	1.17	5.91	1.21	5.71	5.91	5.55	773.3	774.13	773.85	774.64
LN J18	9.89	15.87	1.2	5.01	1.13	5.43	4.84	4.91	774.13	774.85	774.64	775.24
LN J14	8.11	15.82	1.06	4.82	1.01	5.07	4.02	4.7	774.85	775.64	775.24	776
LN J10	5.92	9.38	0.9	5.33	0.94	5.08	5.33	4.87	775.47	777.38	775.91	777.78
LN J8	4.65	9.68	0.76	5.14	0.83	4.65	5.14	4.41	777.17	778.29	777.58	778.63
LN J6	2.96	9.62	0.59	4.55	0.65	4	4.55	3.73	778.02	779.71	778.34	779.96
LN J4	2	9.72	0.48	4.12	0.53	3.56	4.12	3.25	779.49	780.41	779.76	780.61
LN J2	0.96	10.83	0.31	3.6	0.37	2.88	3.6	1.09	780.16	781.77	780.36	781.77

H. Moghadassi, P.E. 07/12/11
Signature of Registrant & Date

Texas Department of Transportation
© 2011

SH 289
STORM SEWER CALCULATION

SHEET 11 OF 11

DESIGN	FED.RD. DIV.NO.	STATE PROJECT NO.		HIGHWAY NO.
SHM	6	SEE TITLE SHEET		SH 289
GRAPHICS TA	STATE	DISTRICT	COUNTY	SHEET NO.
CHECK SHM	TEXAS	DALLAS	COLLIN	207
CHECK	CONTROL	SECTION	JOB	
	0091	03	021	

P-201107-01

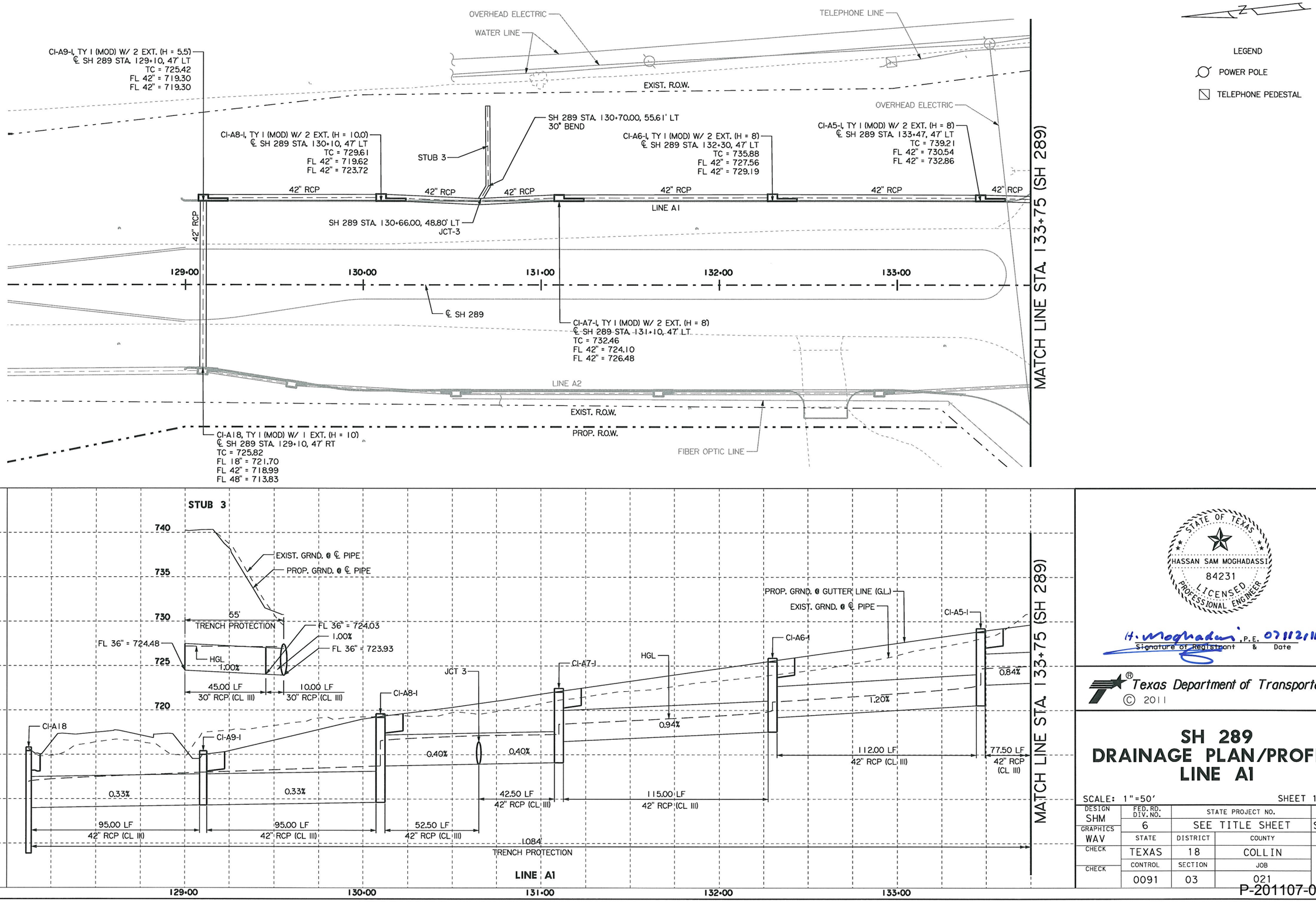

STATE OF TEXAS
HASSAN SAM MOGHADASSI
84231
LICENSED
PROFESSIONAL ENGINEER

H. Moghadassi, P.E. 07112011
Signature of Registrant & Date

Texas Department of Transportation
© 2011

SH 289
DRAINAGE PLAN/PROFILE
LINE A1

SCALE: 1"=50' SHEET 1 OF 5

DESIGN	FED. RD. DIV. NO.	STATE PROJECT NO.		HIGHWAY NO.
SHM	6	SEE TITLE SHEET		SH 289
GRAPHICS	STATE	DISTRICT	COUNTY	SHEET NO.
WAV	TEXAS	18	COLLIN	
CHECK	CONTROL	SECTION	JOB	208
CHECK	0091	03	021	

P-201107-01

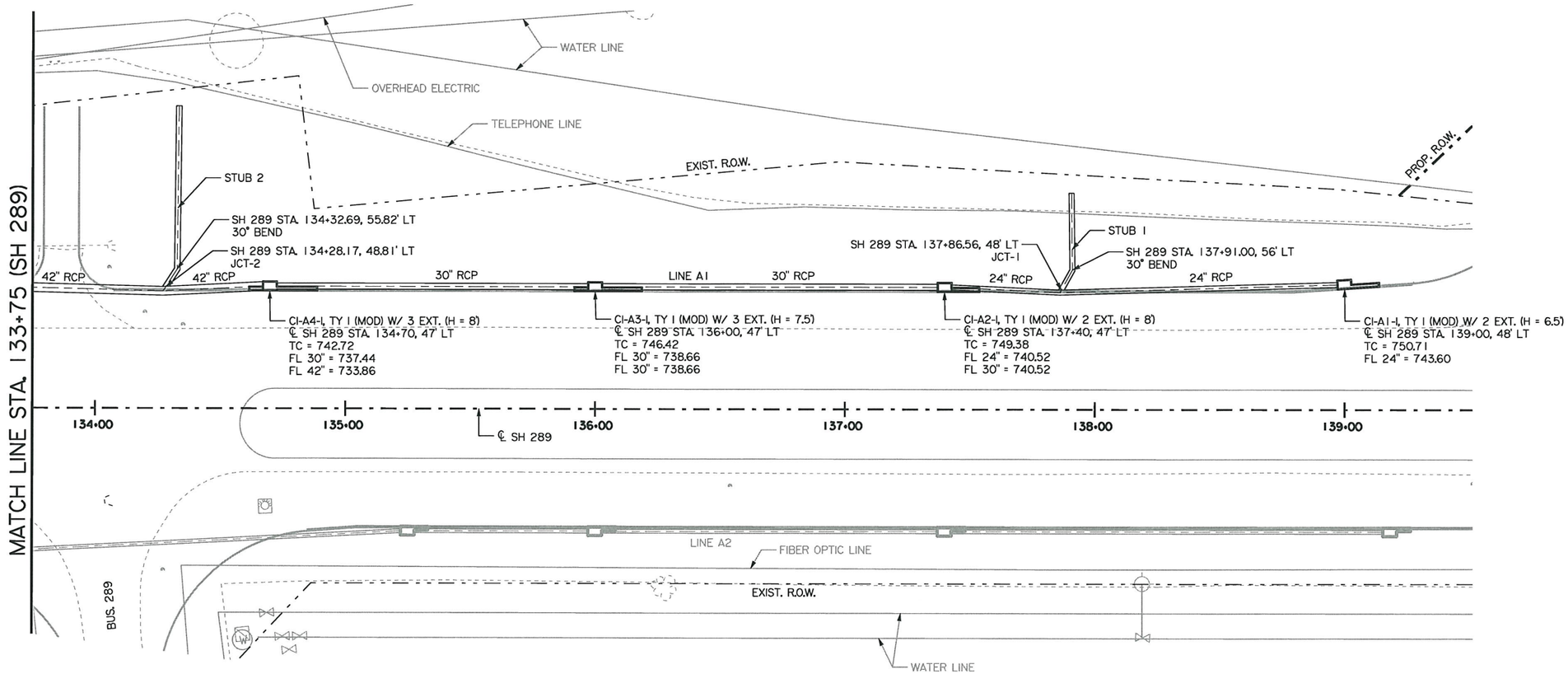

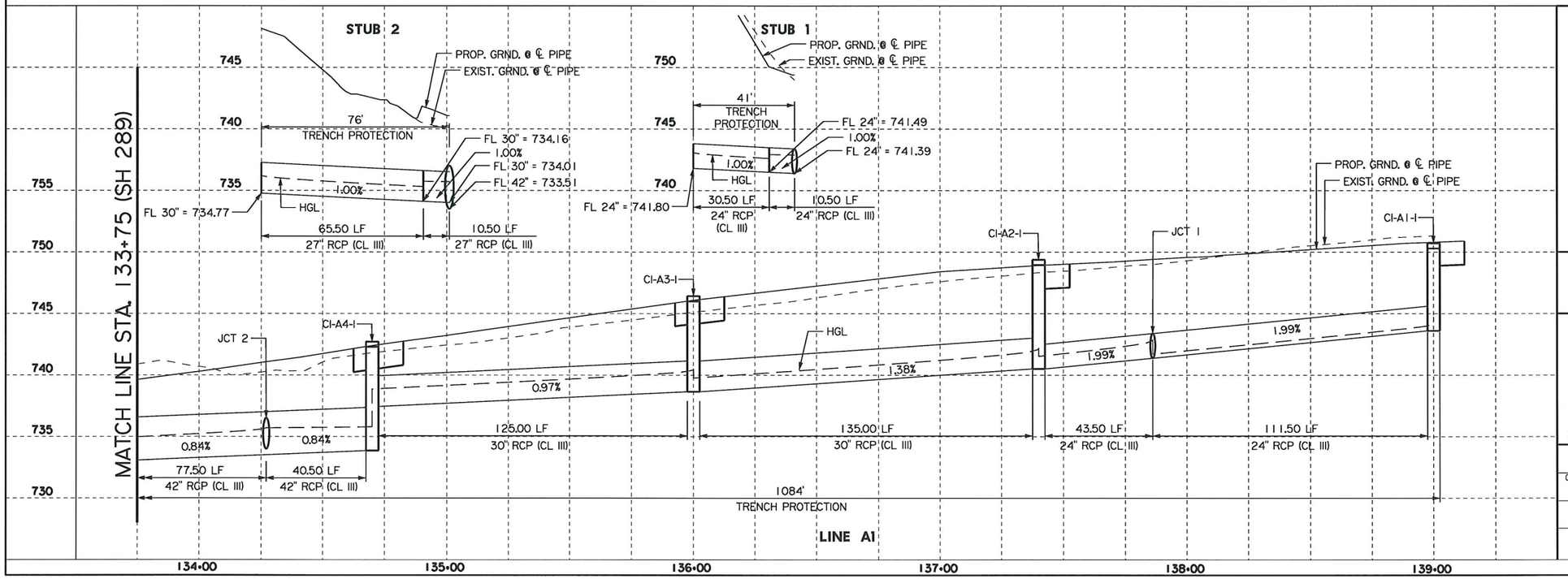

H. Moghadassi, P.E. 07/12/11
Signature of Registrant & Date

Texas Department of Transportation
© 2011

SH 289
DRAINAGE PLAN/PROFILE
LINE A1

SCALE: 1"=50' SHEET 2 OF 5

DESIGN	FED. RD. DIV. NO.	FEDERAL AID PROJECT NO.		HIGHWAY NO.
SHM	6	SEE TITLE SHEET		SH 289
GRAPHICS WAV	STATE	DISTRICT	COUNTY	SHEET NO.
CHECK	TEXAS	18	COLLIN	209
CHECK	CONTROL	SECTION	JOB	
	0091	03	021	

P-201107-01

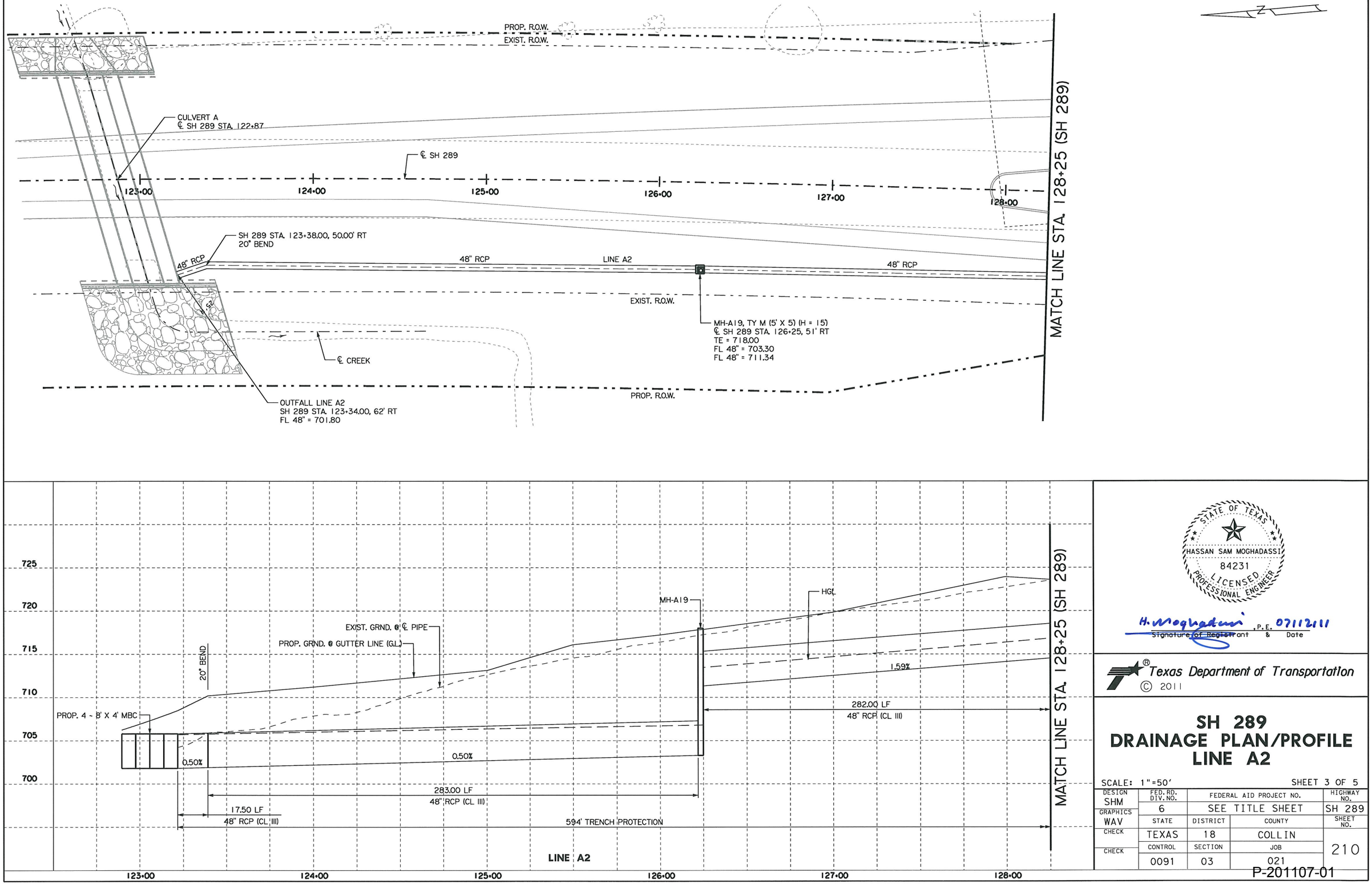

STATE OF TEXAS
HASSAN SAM MOGHADASSI
84231
LICENSED
PROFESSIONAL ENGINEER

H. Moghadassi, P.E. 07112011
Signature of Registrant & Date

Texas Department of Transportation
© 2011

SH 289
DRAINAGE PLAN/PROFILE
LINE A2

SCALE: 1"=50' SHEET 3 OF 5

DESIGN	FED. RD. DIV. NO.	FEDERAL AID PROJECT NO.		HIGHWAY NO.
SHM	6	SEE TITLE SHEET		SH 289
GRAPHICS WAV	STATE	DISTRICT	COUNTY	SHEET NO.
CHECK	TEXAS	18	COLLIN	210
CHECK	CONTROL	SECTION	JOB	
	0091	03	021	

P-201107-01

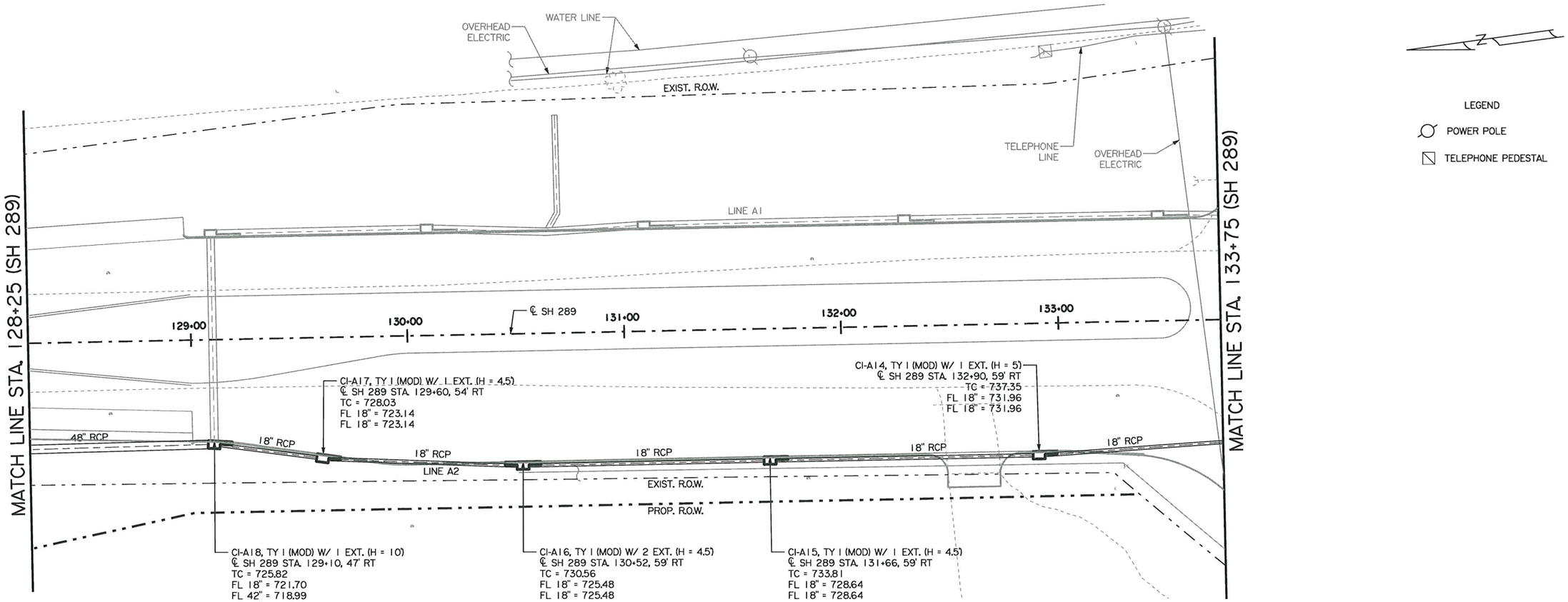

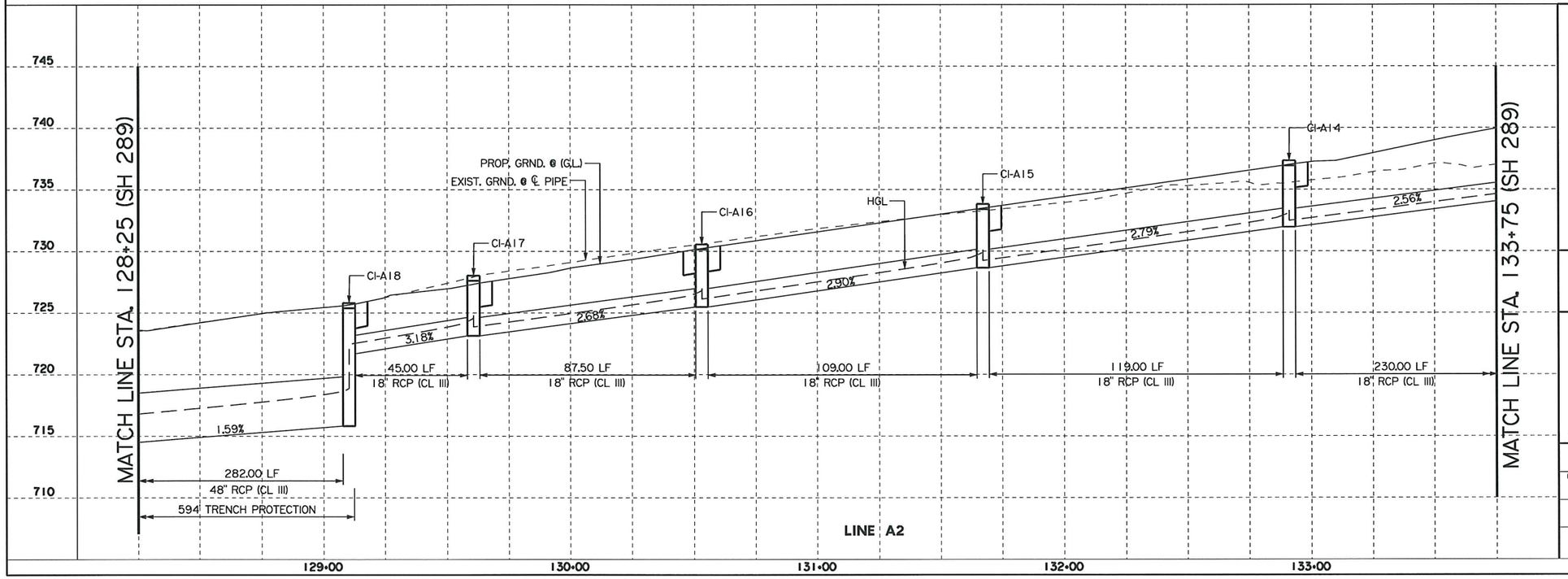

STATE OF TEXAS
HASSAN SAM MOGHADASSI
84231
LICENSED
PROFESSIONAL ENGINEER

H. Moghadassi, P.E. 07112011
Signature of Registrant & Date

Texas Department of Transportation
© 2011

SH 289
DRAINAGE PLAN/PROFILE
LINE A2

SCALE: 1"=50' SHEET 4 OF 5

DESIGN	FED. RD. DIV. NO.	FEDERAL AID PROJECT NO.		HIGHWAY NO.
SHM	6	SEE TITLE SHEET		SH 289
GRAPHICS	STATE	DISTRICT	COUNTY	SHEET NO.
WAV	TEXAS	18	COLLIN	
CHECK	CONTROL	SECTION	JOB	211
CHECK	0091	03	021	

P-201107-01

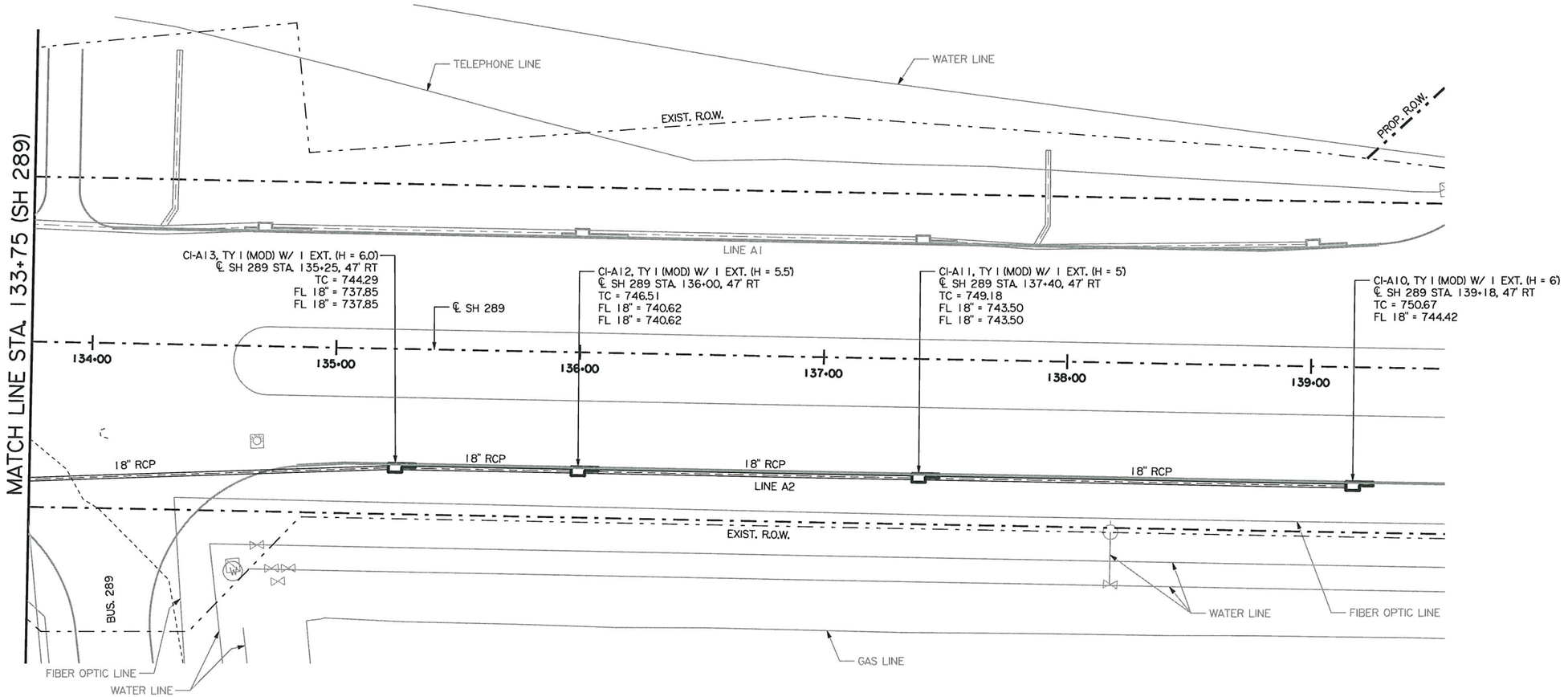

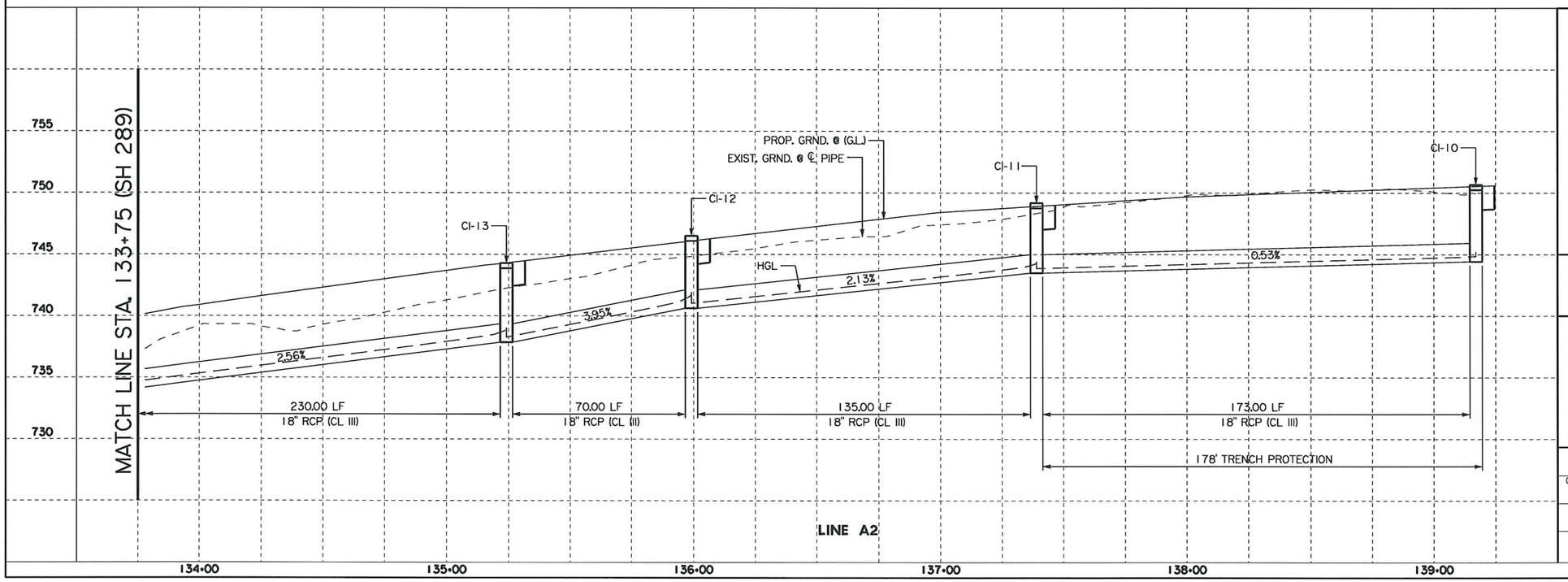

STATE OF TEXAS
HASSAN SAM MOGHADASSI
84231
LICENSED PROFESSIONAL ENGINEER

H. Moghadassi, P.E. 07/12/11
Signature of Registrant & Date

Texas Department of Transportation
© 2011

SH 289 DRAINAGE PLAN/PROFILE LINE A2

SCALE: 1"=50' SHEET 5 OF 5

DESIGN	FED. RD. DIV. NO.	FEDERAL AID PROJECT NO.		HIGHWAY NO.
SHM	6	SEE TITLE SHEET		SH 289
GRAPHICS	STATE	DISTRICT	COUNTY	SHEET NO.
WAV	TEXAS	18	COLLIN	
CHECK	CONTROL	SECTION	JOB	212
CHECK	0091	03	021	

P-201107-01

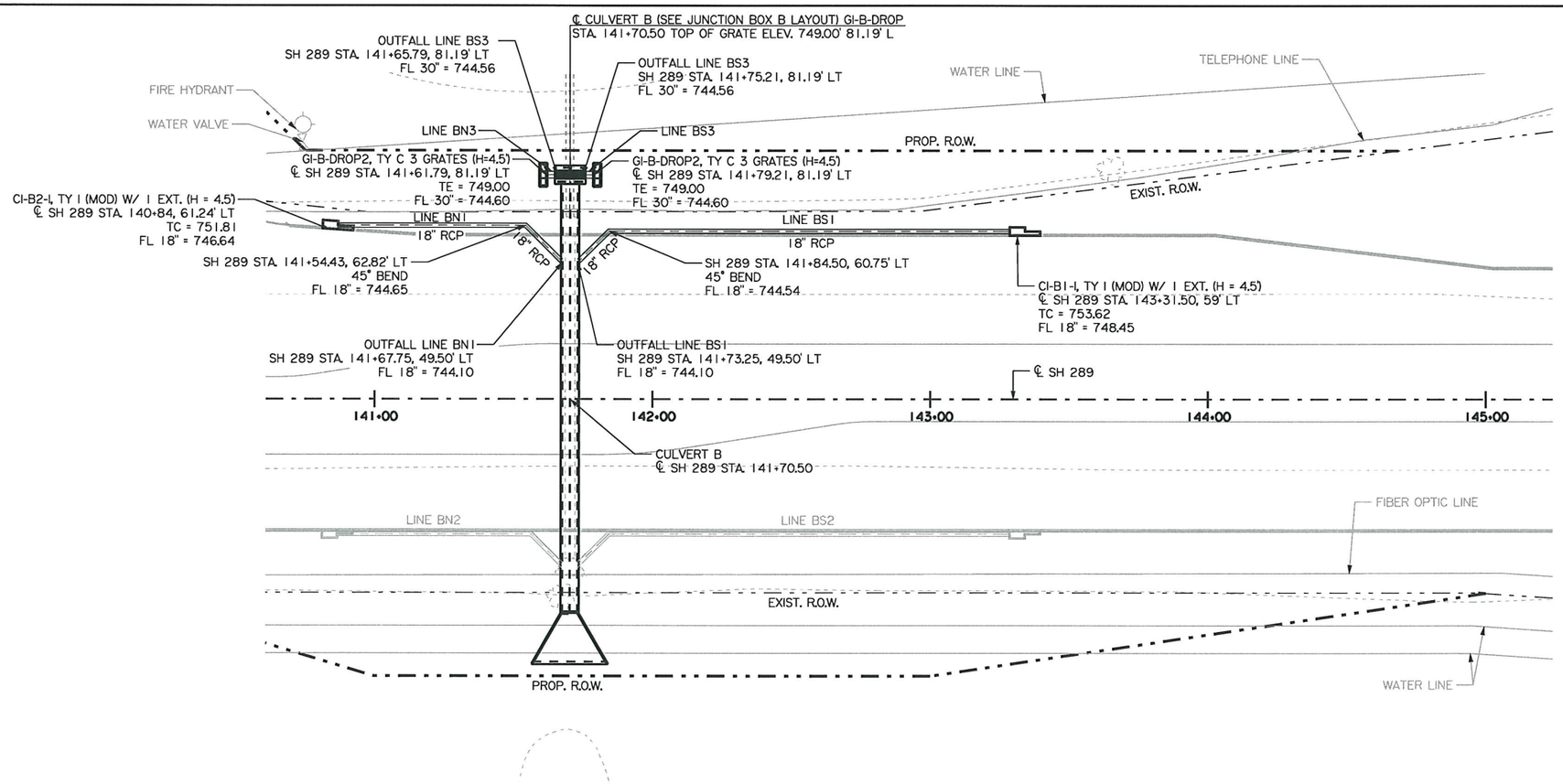

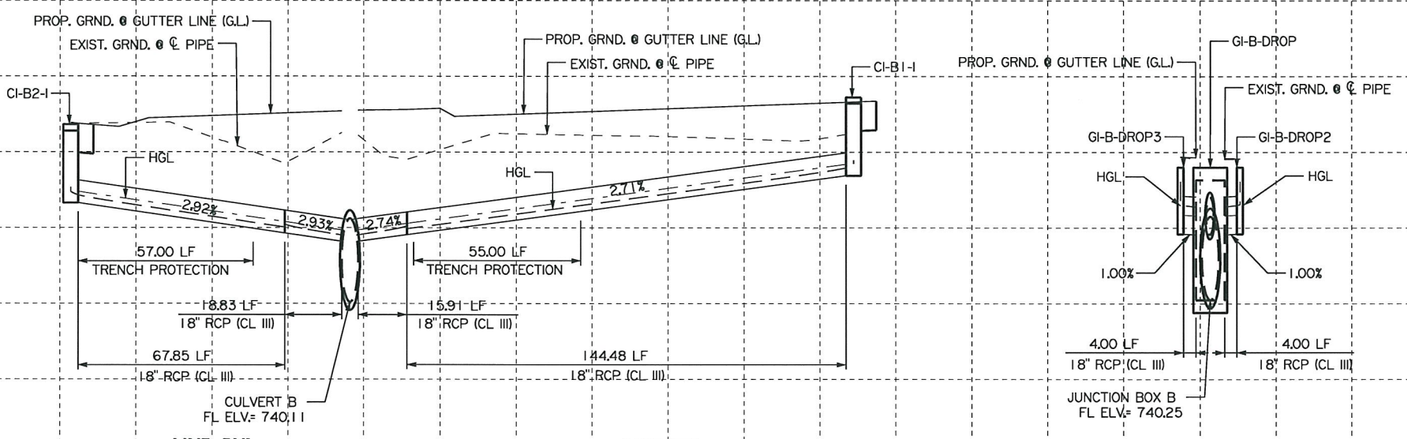

STATE OF TEXAS
CHRISTOPHER P. ROCHA
107690
LICENSED
PROFESSIONAL ENGINEER

Chris Rocha, P.E. 7/13/11
Signature of Registrant & Date

Texas Department of Transportation
© 2011

SH 289
DRAINAGE PLAN/PROFILE
LINE BN1 & BS1
BN3 & BS3

SCALE: 1"=50' SHEET 1 OF 2

DESIGN	FED. RD. DIV. NO.	STATE PROJECT NO.		HIGHWAY NO.
CR	6	SEE TITLE SHEET		SH 289
GRAPHICS	STATE	DISTRICT	COUNTY	SHEET NO.
WAV	TEXAS	18	COLLIN	
CHECK	CONTROL	SECTION	JOB	213
CHECK	0091	03	021	

P-201107-01

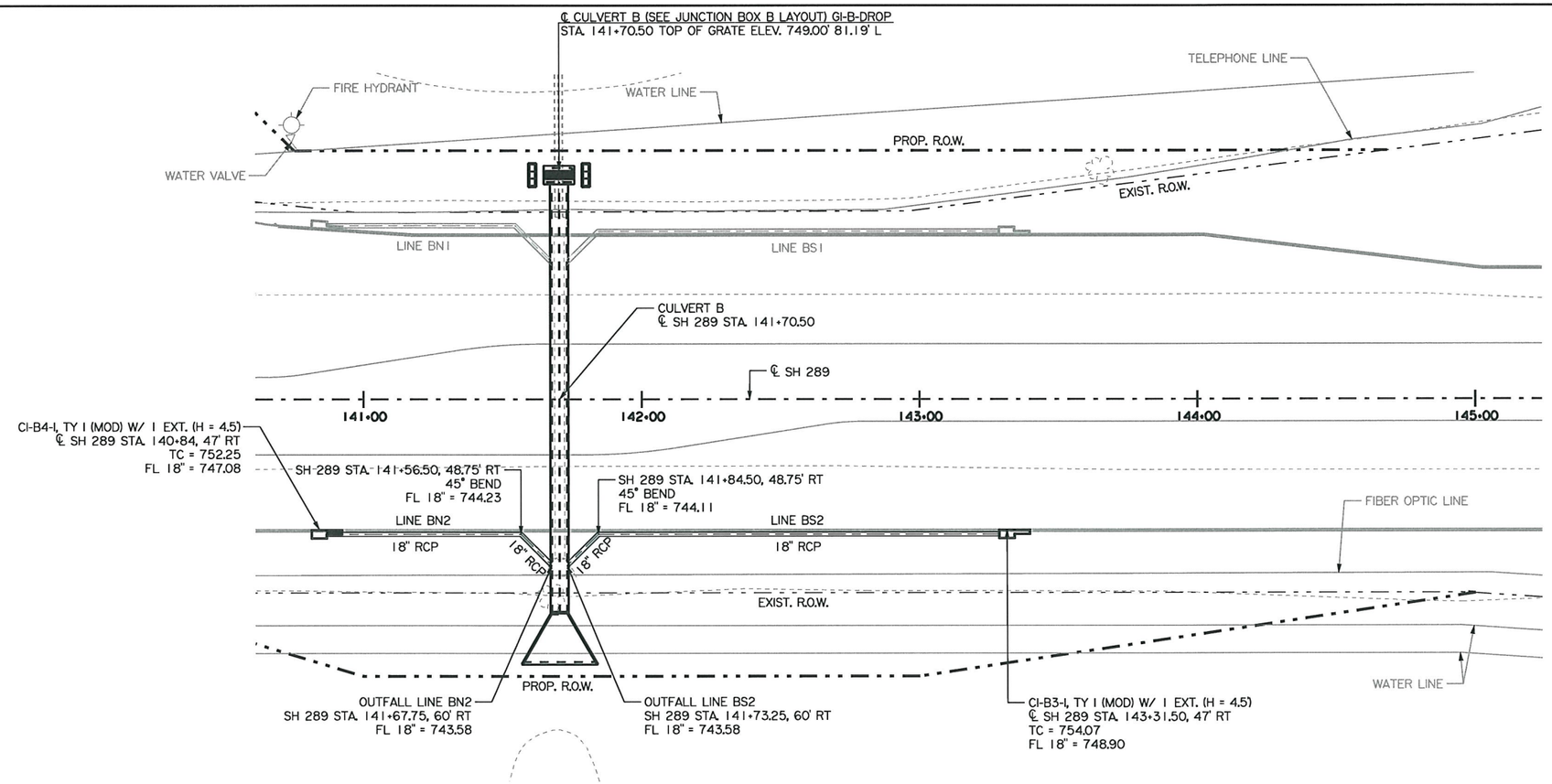

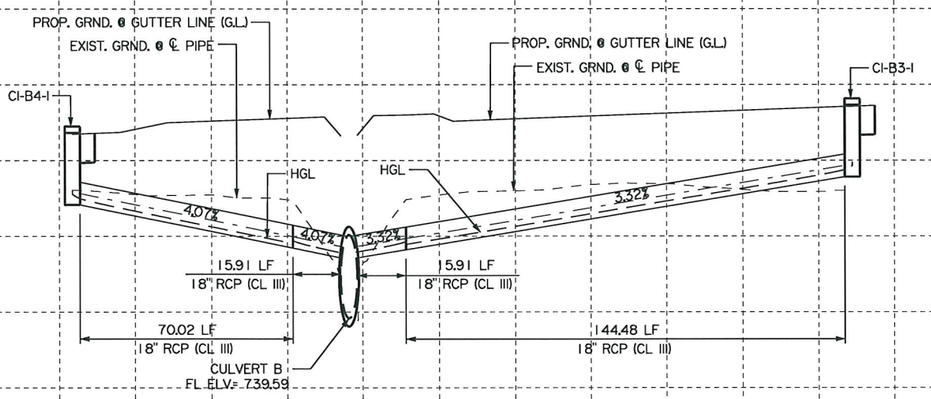

STATE OF TEXAS
CHRISTOPHER P. ROCHA
107690
LICENSED
PROFESSIONAL ENGINEER

Chris Rocha, P.E. 7/13/11
Signature of Registrant & Date

Texas Department of Transportation
© 2011

SH 289
DRAINAGE PLAN/PROFILE
LINE BN2 & BS2

SCALE: 1"=50' SHEET 2 OF 2

DESIGN	FED. RD. DIV. NO.	STATE PROJECT NO.		HIGHWAY NO.
CR	6	SEE TITLE SHEET		SH 289
GRAPHICS WAV	STATE	DISTRICT	COUNTY	SHEET NO.
CHECK	TEXAS	18	COLLIN	214
CHECK	CONTROL	SECTION	JOB	
	0091	03	021	

P-201107-01

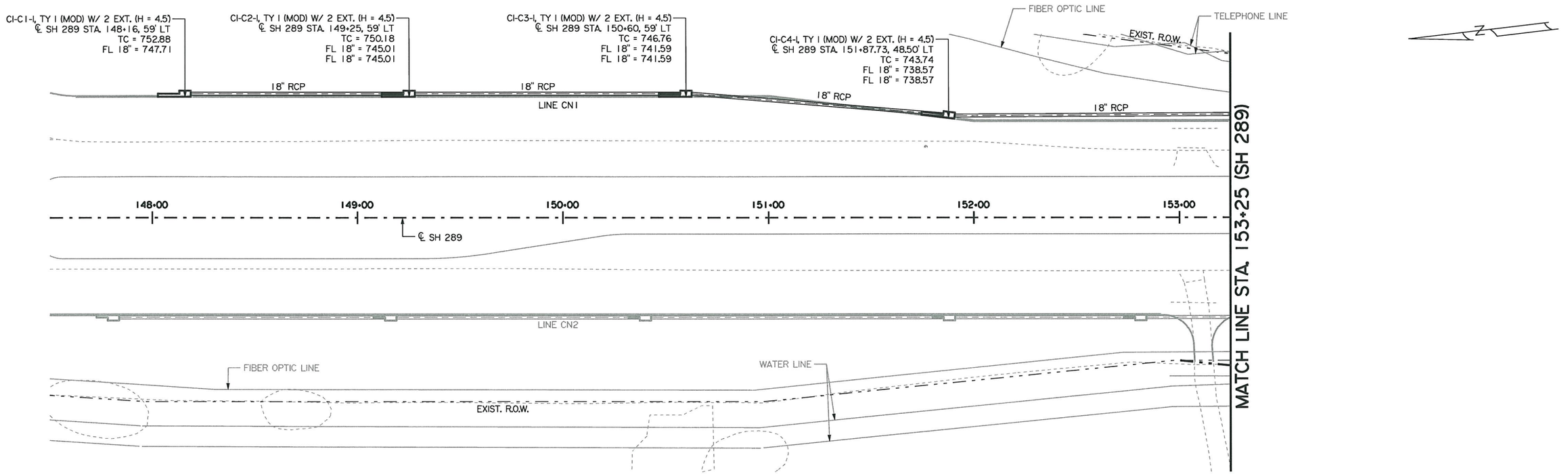

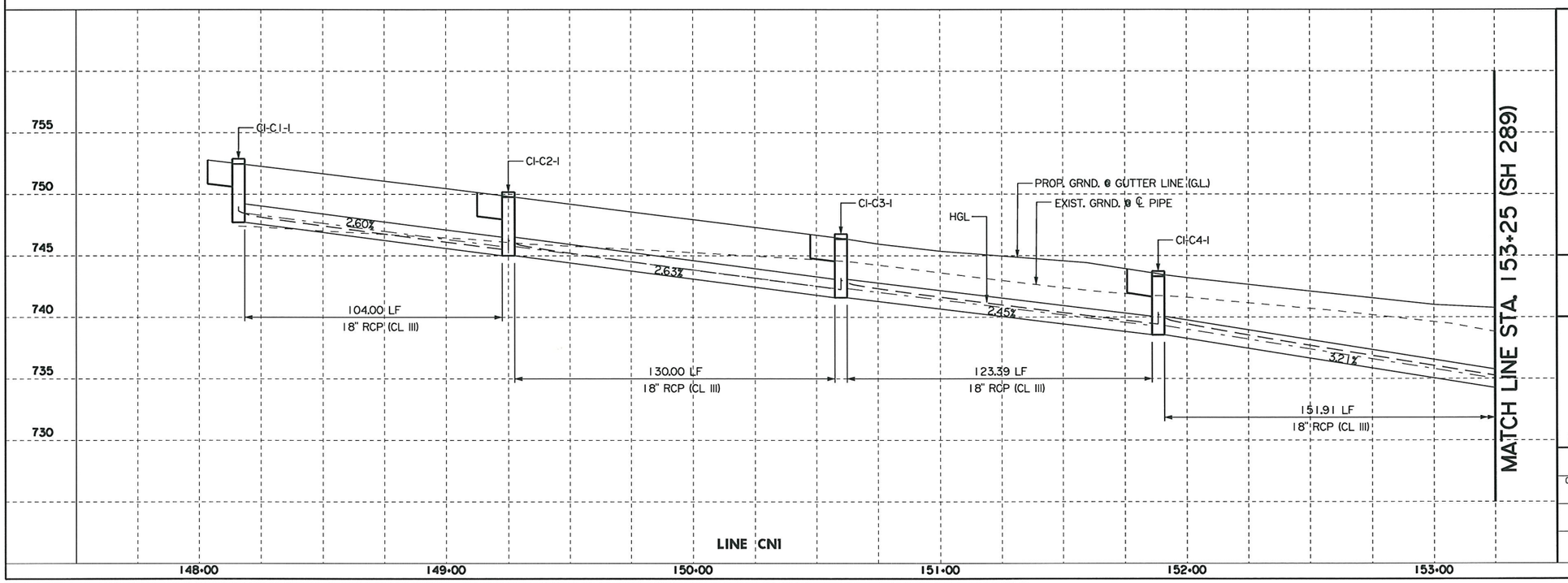

STATE OF TEXAS
CHRISTOPHER P. ROCHA
107690
LICENSED
PROFESSIONAL ENGINEER

Chris Rocha, P.E. 7/13/11
Signature of Registrant & Date

Texas Department of Transportation
© 2011

SH 289
DRAINAGE PLAN/PROFILE
LINE CN1

SCALE: 1"=50' SHEET 1 OF 10

DESIGN	FED. RD. DIV. NO.	STATE PROJECT NO.		HIGHWAY NO.
CR	6	SEE TITLE SHEET		SH 289
GRAPHICS	STATE	DISTRICT	COUNTY	SHEET NO.
WAV	TEXAS	18	COLLIN	215
CHECK	CONTROL	SECTION	JOB	
CHECK	0091	03	021	

P-201107-01

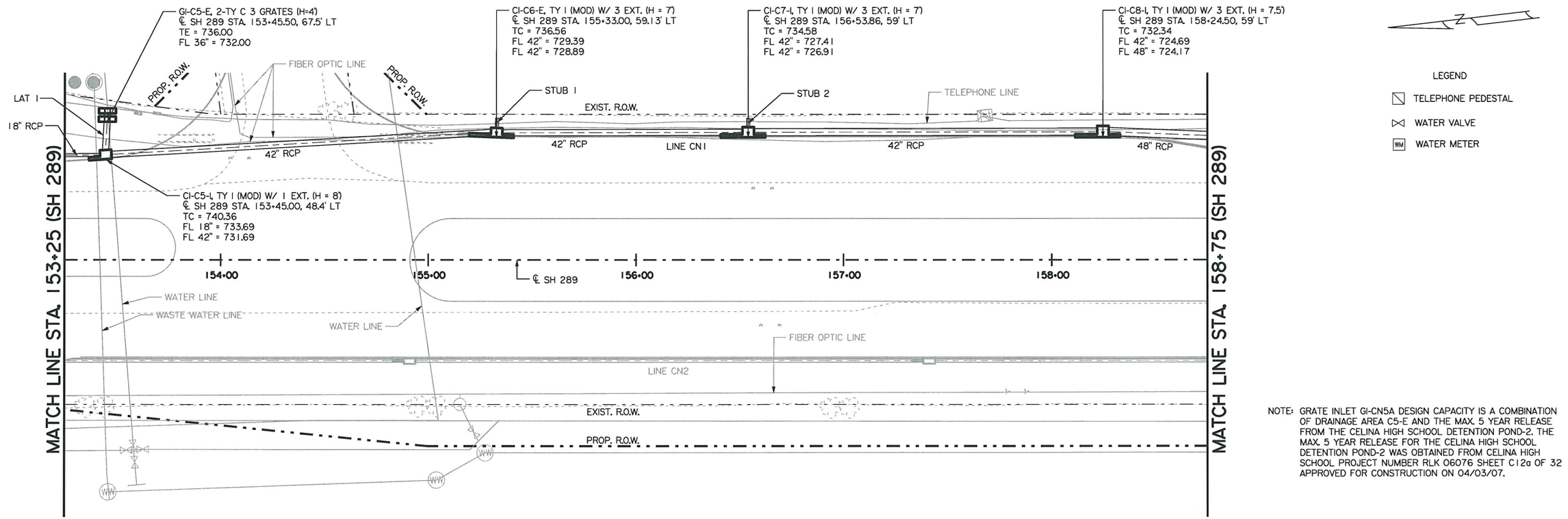

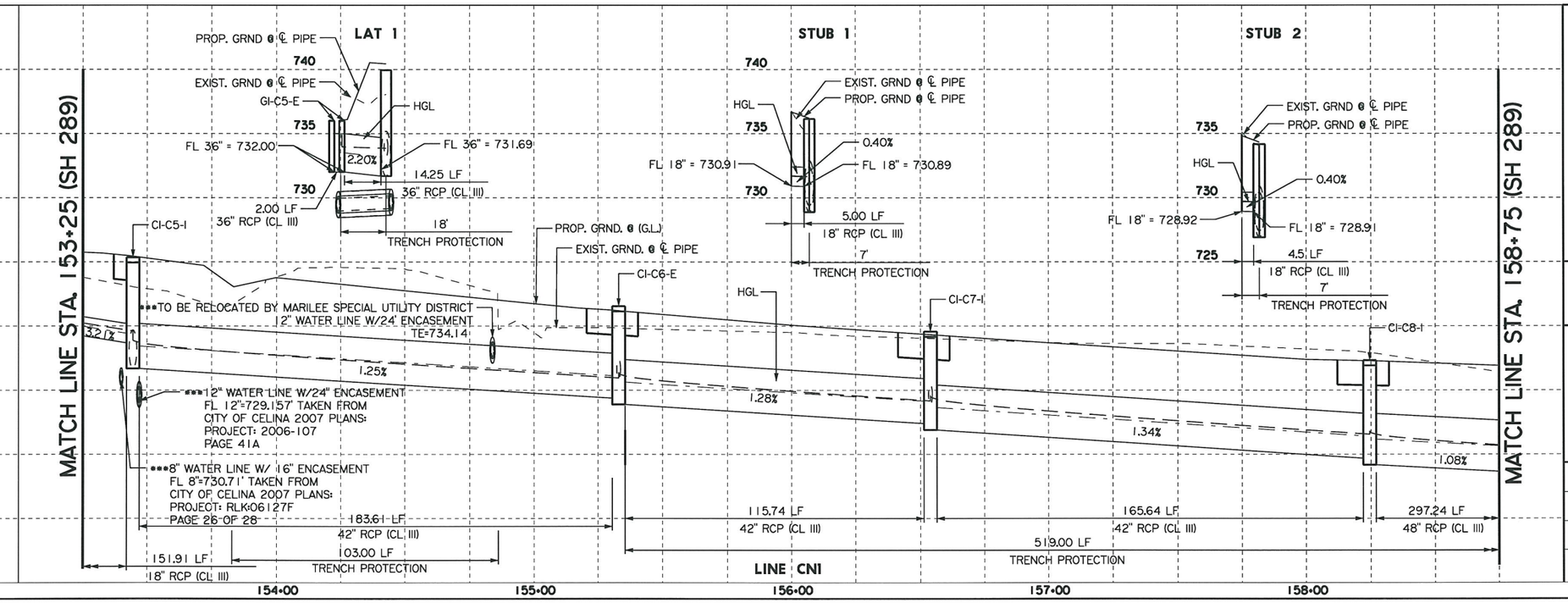

STATE OF TEXAS
CHRISTOPHER P. ROCHA
107690
LICENSED
PROFESSIONAL ENGINEER

Chris Rocha, P.E. 7/20/11
Signature of Registrant & Date

Texas Department of Transportation
© 2011

SH 289
DRAINAGE PLAN/PROFILE
LINE CN1

SCALE: 1"=50' SHEET 2 OF 10

DESIGN	FED. RD. DIV. NO.	STATE PROJECT NO.		HIGHWAY NO.
CR	6	SEE TITLE SHEET		SH 289
GRAPHICS	STATE	DISTRICT	COUNTY	SHEET NO.
WAV	TEXAS	18	COLLIN	
CHECK	CONTROL	SECTION	JOB	216
CHECK	0091	03	021	

P-201107-01

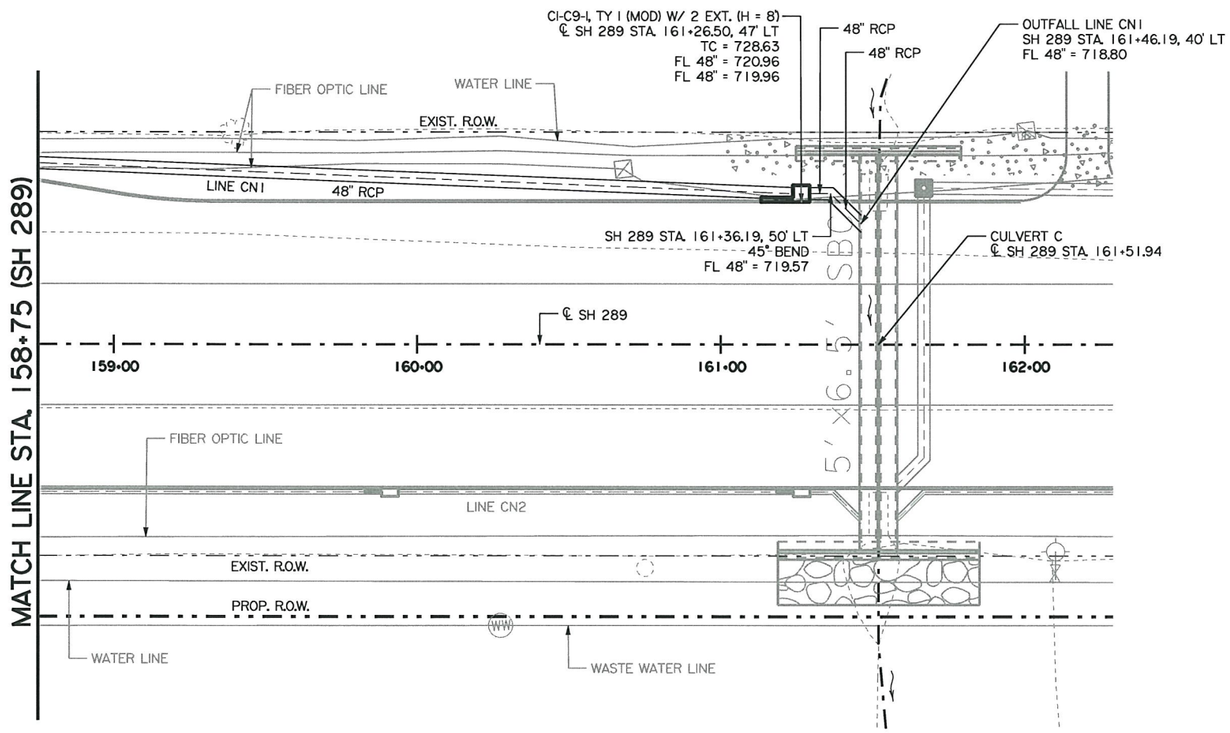

LEGEND

- TELEPHONE PEDESTAL
- WATER VALVE
- FIRE HYDRANT
- FIBER OPTIC VAULT

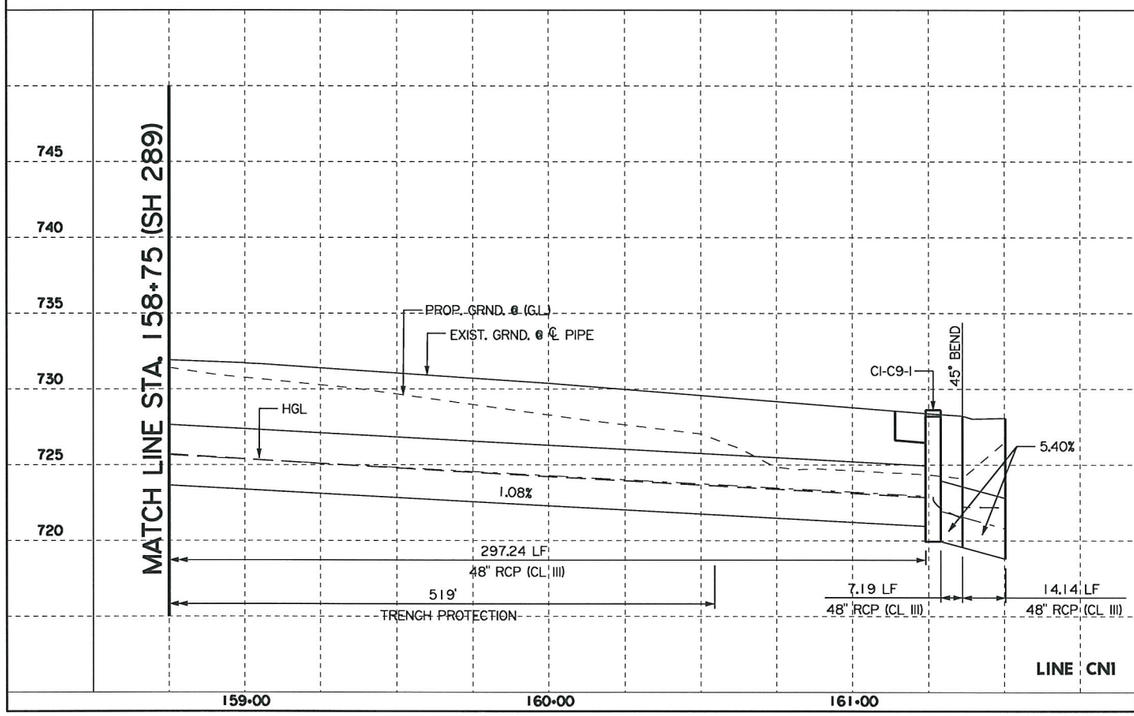

STATE OF TEXAS
CHRISTOPHER P. ROCHA
107690
LICENSED
PROFESSIONAL ENGINEER

Chris Rocha, P.E. 7/13/11
Signature of Registrant & Date

Texas Department of Transportation
© 2011

SH 289
DRAINAGE PLAN/PROFILE
LINE CN1

SCALE: 1"=50' SHEET 3 OF 10

DESIGN	FED. RD. DIV. NO.	STATE PROJECT NO.		HIGHWAY NO.
CR	6	SEE TITLE SHEET		SH 289
GRAPHICS	STATE	DISTRICT	COUNTY	SHEET NO.
WAV	TEXAS	18	COLLIN	217
CHECK	CONTROL	SECTION	JOB	
CHECK	0091	03	021	

P-201107-01

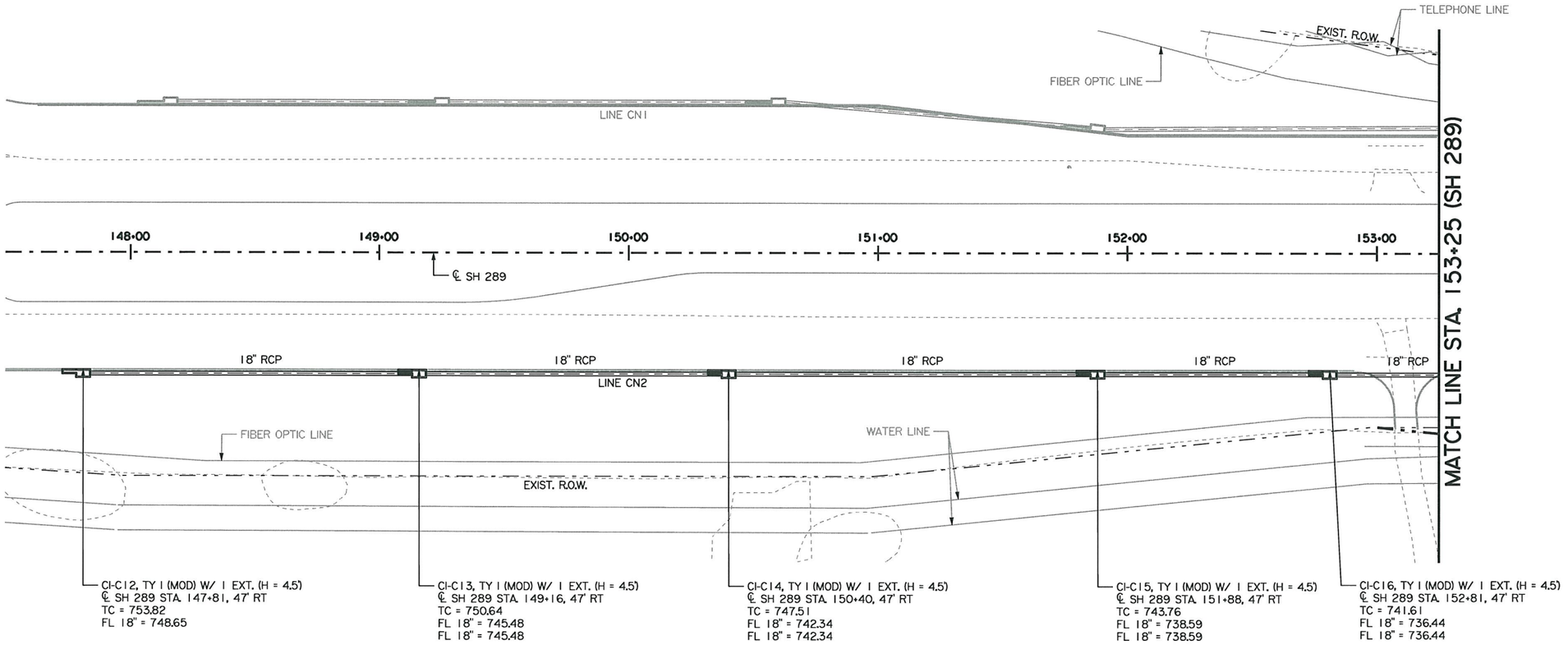

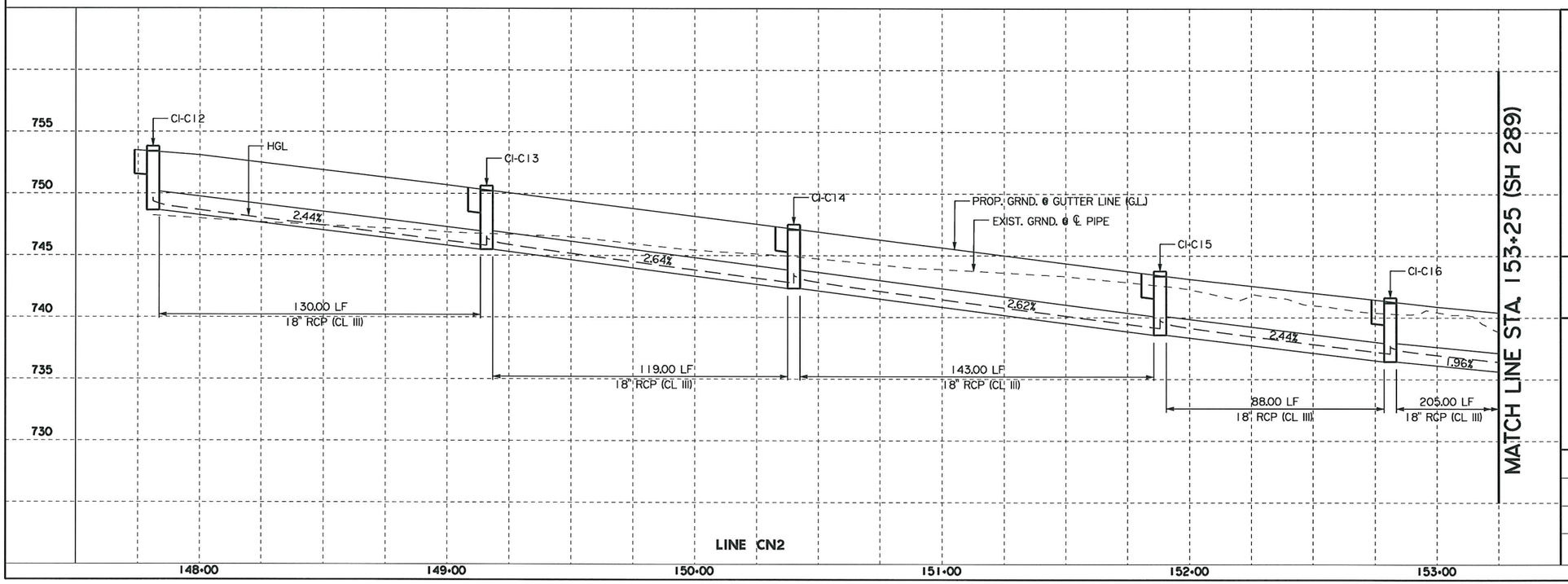

STATE OF TEXAS
CHRISTOPHER P. ROCHA
107690
LICENSED PROFESSIONAL ENGINEER

Chris Rocha, P.E. 7/13/11
Signature of Registrant & Date

Texas Department of Transportation
© 2011

SH 289
DRAINAGE PLAN/PROFILE
LINE CN2

SCALE: 1"=50'

SHEET 4 OF 10

DESIGN	FED. RD. DIV. NO.	STATE PROJECT NO.		HIGHWAY NO.
CR	6	SEE TITLE SHEET		SH 289
GRAPHICS	STATE	DISTRICT	COUNTY	SHEET NO.
WAV	TEXAS	18	COLLIN	218
CHECK	CONTROL	SECTION	JOB	
CHECK	0091	03	021	

P-201107-01

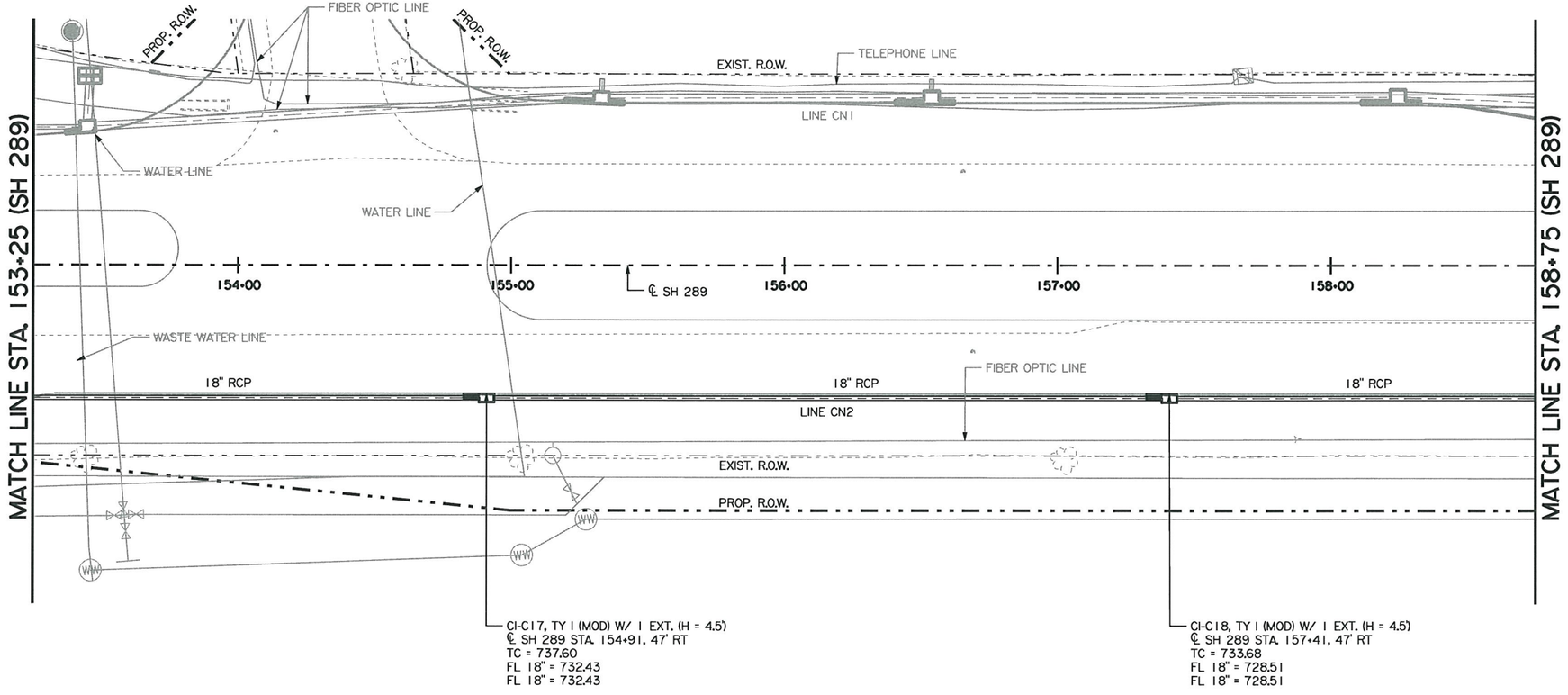

LEGEND

- TELEPHONE PEDESTAL
- WATER VALVE
- WM WATER METER

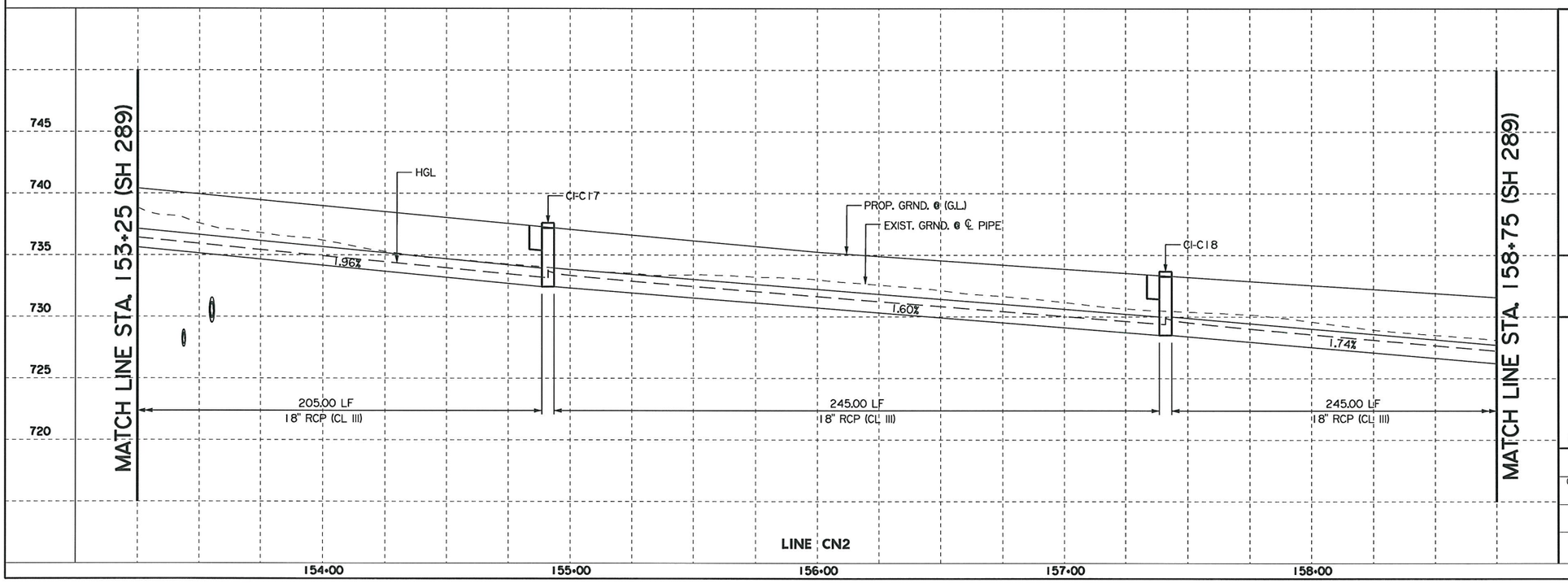

STATE OF TEXAS
CHRISTOPHER P. ROCHA
107690
LICENSED PROFESSIONAL ENGINEER

Chris Rocha, P.E. 7/13/11
Signature of Registrant & Date

Texas Department of Transportation
© 2011

SH 289 DRAINAGE PLAN/PROFILE LINE CN2

SCALE: 1"=50'

SHEET 5 OF 10

DESIGN	FED. RD. DIV. NO.	STATE PROJECT NO.		HIGHWAY NO.
CR	6	SEE TITLE SHEET		SH 289
GRAPHICS	STATE	DISTRICT	COUNTY	SHEET NO.
WAV	TEXAS	18	COLLIN	219
CHECK	CONTROL	SECTION	JOB	
CHECK	0091	03	021	

P-201107-01

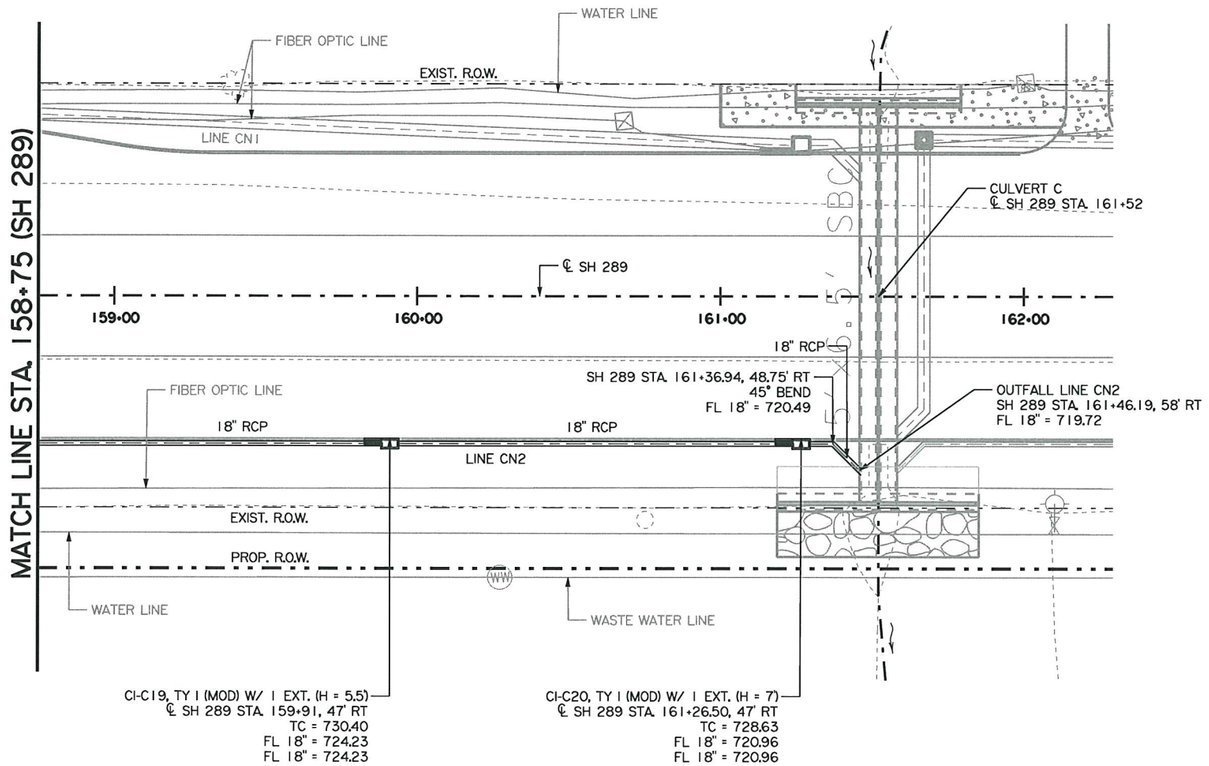

LEGEND

- TELEPHONE PEDESTAL
- WATER VALVE
- FIRE HYDRANT
- FIBER OPTIC VAULT

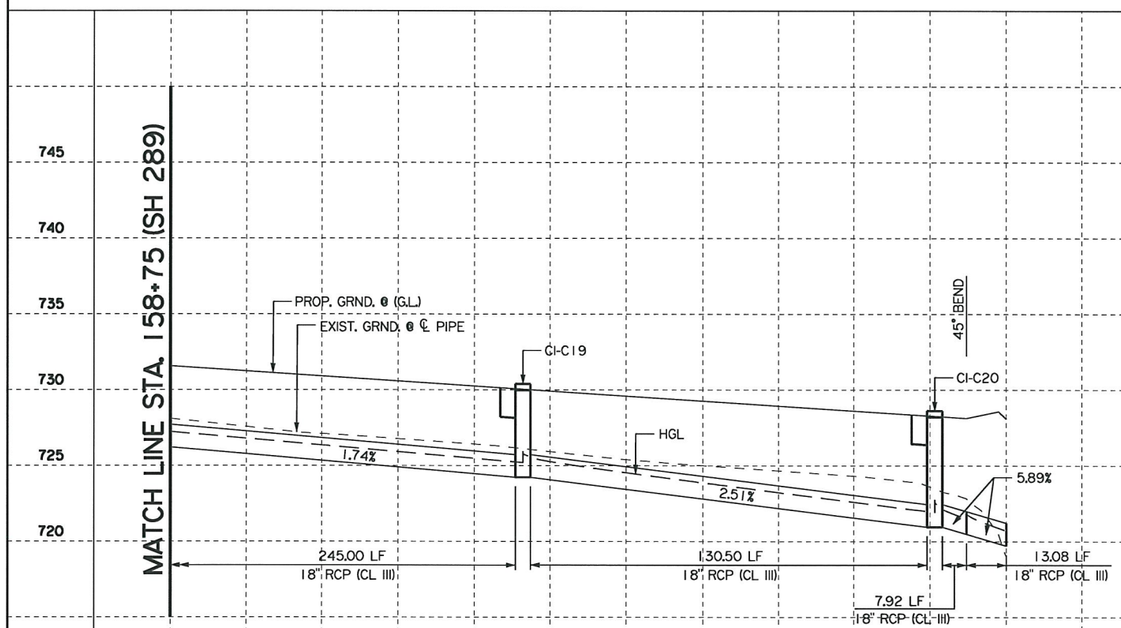

STATE OF TEXAS
CHRISTOPHER P. ROCHA
107690
LICENSED
PROFESSIONAL ENGINEER

Chris Rocha, P.E. 7/13/11
Signature of Registrant & Date

Texas Department of Transportation
© 2011

SH 289
DRAINAGE PLAN/PROFILE
LINE CN2

SCALE: 1"=50'

SHEET 6 OF 10

DESIGN	FED. RD. DIV. NO.	STATE PROJECT NO.		HIGHWAY NO.
CR	6	SEE TITLE SHEET		SH 289
GRAPHICS	STATE	DISTRICT	COUNTY	SHEET NO.
WAV	TEXAS	18	COLLIN	220
CHECK	CONTROL	SECTION	JOB	
CHECK	0091	03	021	

P-201107-01

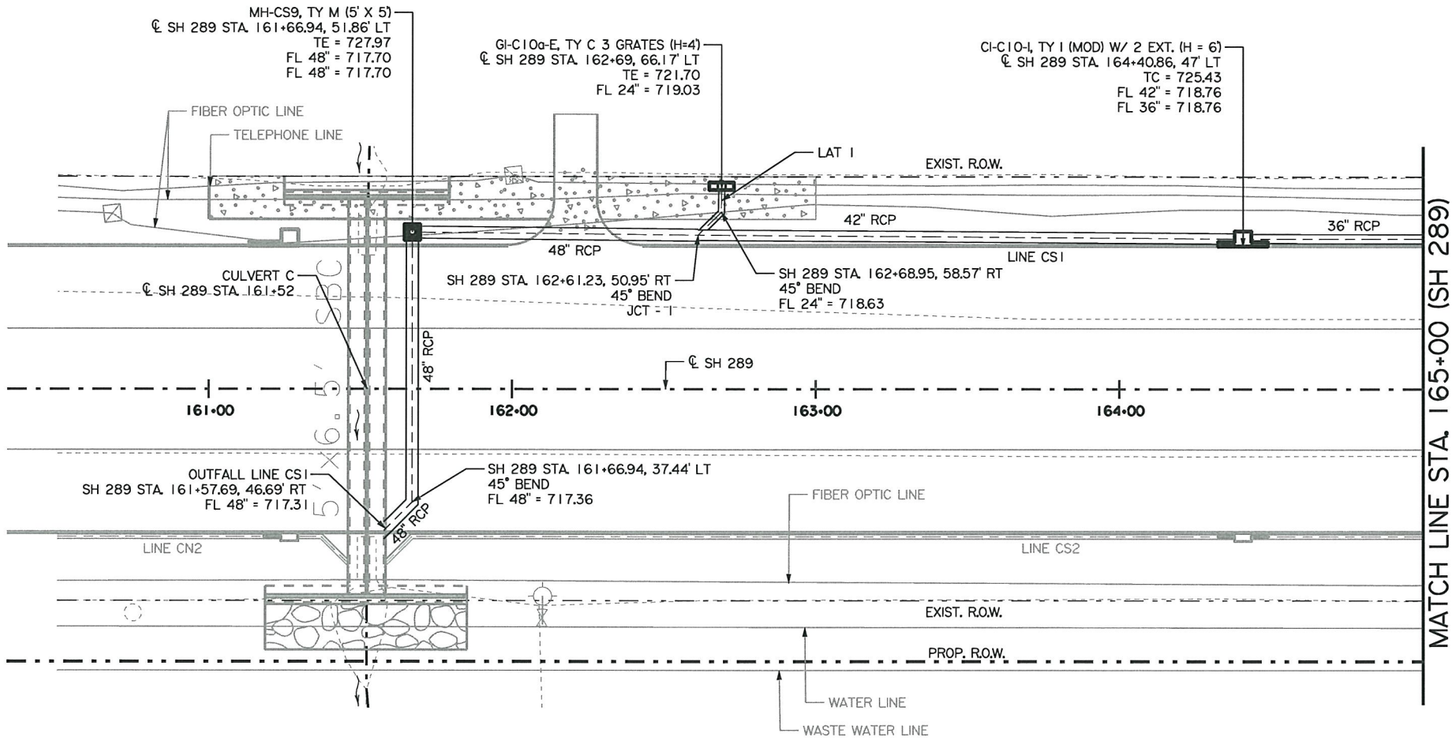

LEGEND

- TELEPHONE PEDESTAL
- WATER VALVE
- FIRE HYDRANT

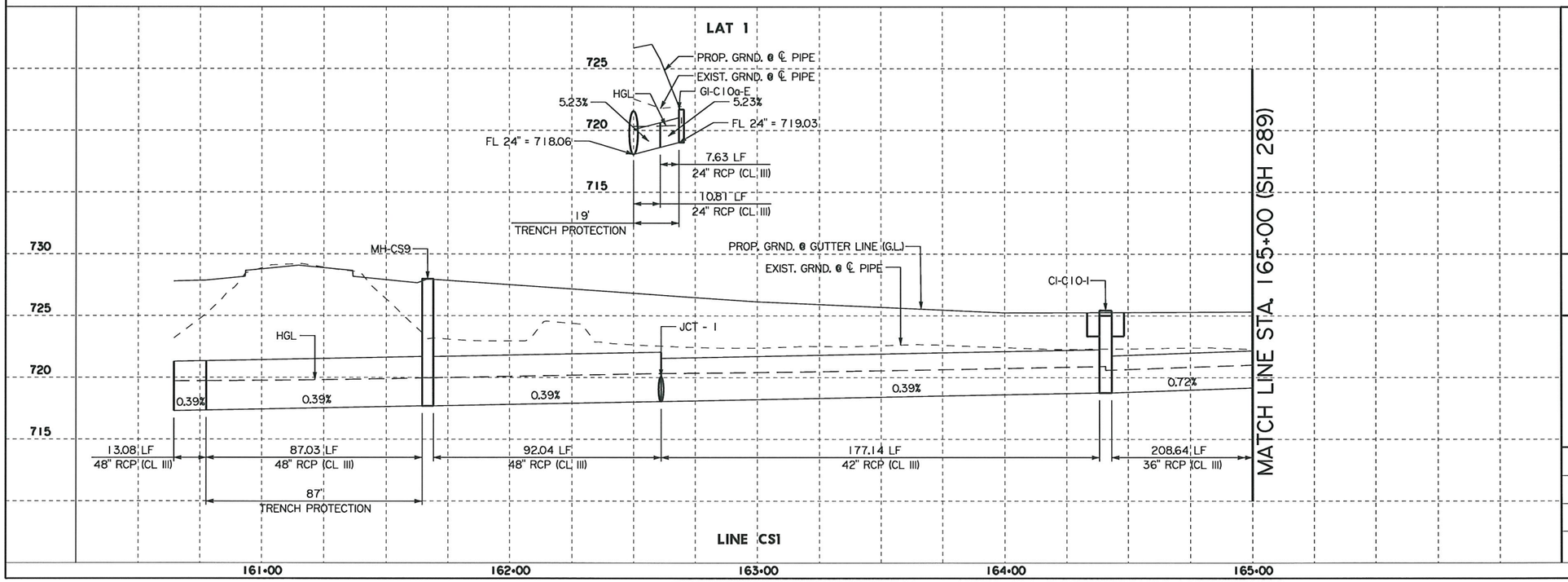

STATE OF TEXAS
CHRISTOPHER P. ROCHA
107690
LICENSED
PROFESSIONAL ENGINEER

Chris Rocha, P.E. 7/13/11
Signature of Registrant & Date

Texas Department of Transportation
© 2011

SH 289
DRAINAGE PLAN/PROFILE
LINE CS1

SCALE: 1"=50'

SHEET 7 OF 10

DESIGN	FED. RD. DIV. NO.	STATE PROJECT NO.		HIGHWAY NO.
CR	6	SEE TITLE SHEET		SH 289
GRAPHICS	STATE	DISTRICT	COUNTY	SHEET NO.
WAV	TEXAS	18	COLLIN	221
CHECK	CONTROL	SECTION	JOB	
CHECK	0091	03	021	

P-201107-01

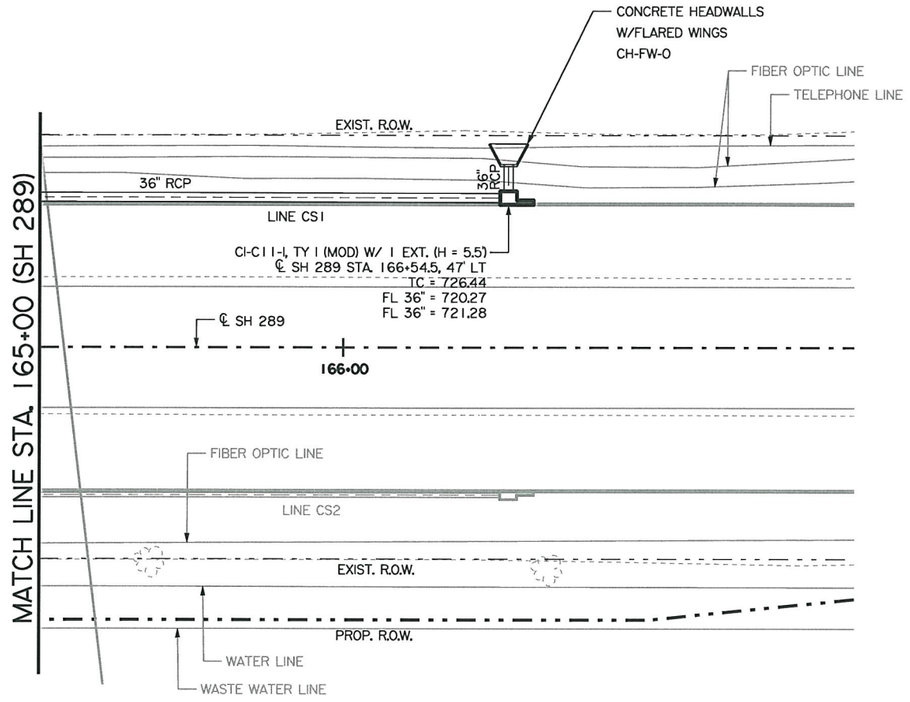

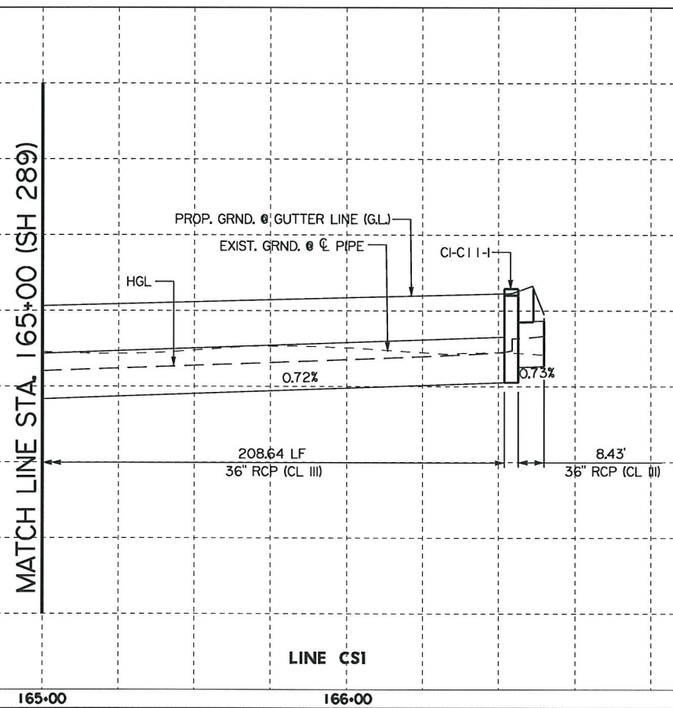

STATE OF TEXAS
CHRISTOPHER P. ROCHA
107690
LICENSED
PROFESSIONAL ENGINEER

Chris Rocha, P.E. 7/13/11
Signature of Registrant & Date

Texas Department of Transportation
© 2011

SH 289
DRAINAGE PLAN/PROFILE
LINE CS1

SCALE: 1"=50' SHEET 8 OF 10

DESIGN	FED. RD. DIV. NO.	STATE PROJECT NO.		HIGHWAY NO.
CR	6	SEE TITLE SHEET		SH 289
GRAPHICS	STATE	DISTRICT	COUNTY	SHEET NO.
WAV	TEXAS	18	COLLIN	222
CHECK	CONTROL	SECTION	JOB	
CHECK	0091	03	021	

P-201107-01

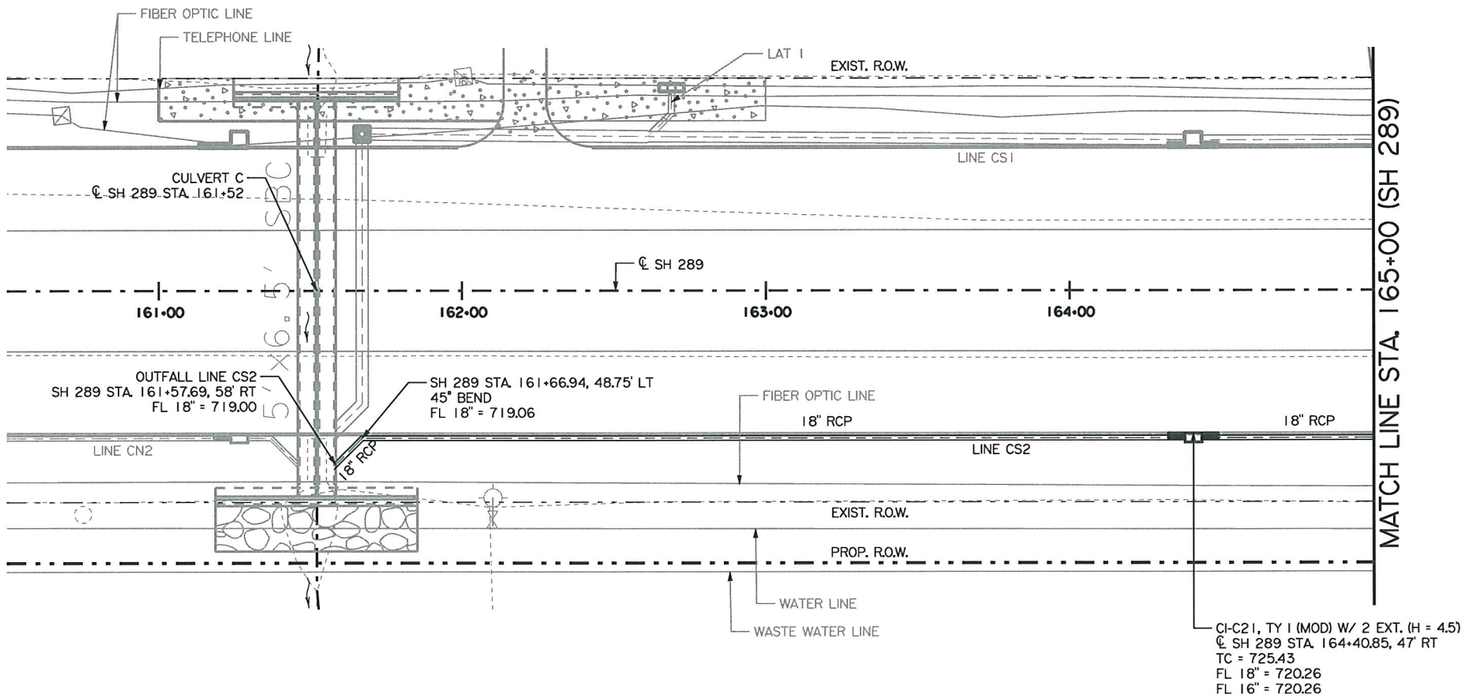

LEGEND

- TELEPHONE PEDESTAL
- WATER VALVE
- FIRE HYDRANT

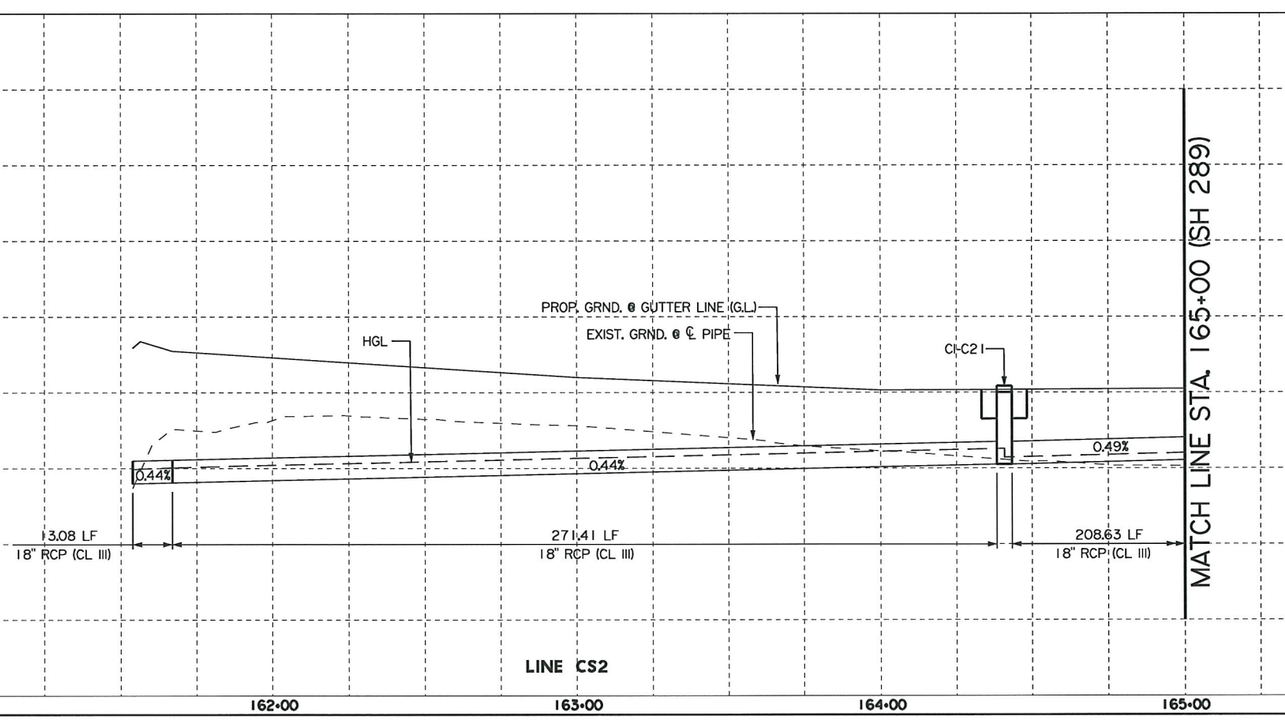

CHRISTOPHER P. ROCHA
107690
LICENSED PROFESSIONAL ENGINEER
STATE OF TEXAS

Chris Rocha, P.E. 7/13/11
Signature of Registrant & Date

Texas Department of Transportation
© 2011

SH 289
DRAINAGE PLAN/PROFILE
LINE CS2

SCALE: 1"=50'

SHEET 9 OF 10

DESIGN	FED. RD. DIV. NO.	STATE PROJECT NO.		HIGHWAY NO.
CR	6	SEE TITLE SHEET		SH 289
GRAPHICS	STATE	DISTRICT	COUNTY	SHEET NO.
WAV	TEXAS	18	COLLIN	
CHECK	CONTROL	SECTION	JOB	223
CHECK	0091	03	021	

P-201107-01

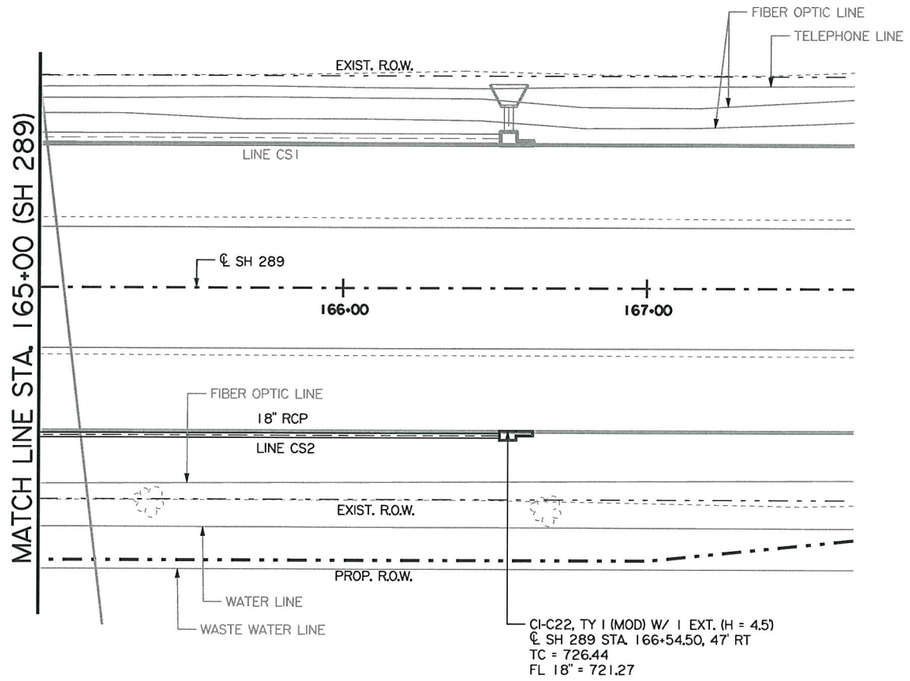

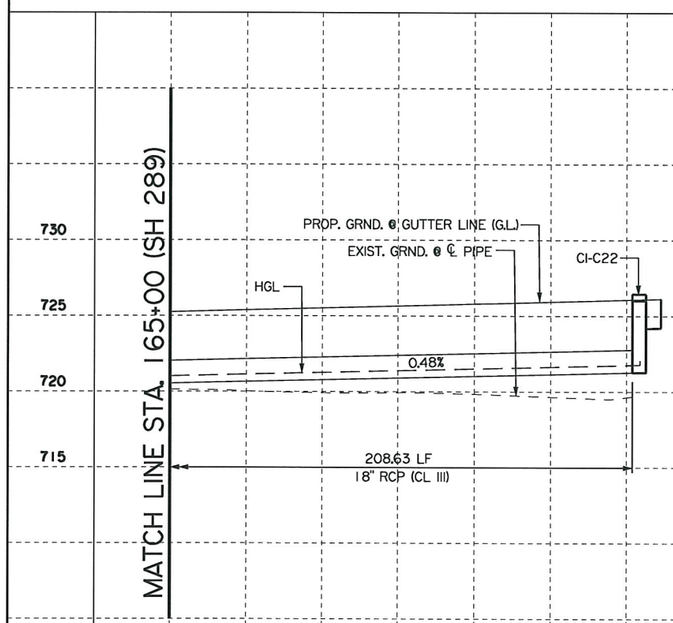

STATE OF TEXAS
CHRISTOPHER P. ROCHA
107690
LICENSED
PROFESSIONAL ENGINEER

Chris Rocha, P.E. 7/13/11
Signature of Registrant & Date

Texas Department of Transportation
© 2011

SH 289
DRAINAGE PLAN/PROFILE
LINE CS2

SCALE: 1"=50' SHEET 10 OF 10

DESIGN	FED. RD. DIV. NO.	STATE PROJECT NO.		HIGHWAY NO.
CR	6	SEE TITLE SHEET		SH 289
GRAPHICS	STATE	DISTRICT	COUNTY	SHEET NO.
WAV	TEXAS	18	COLLIN	
CHECK	CONTROL	SECTION	JOB	224
CHECK	0091	03	021	

P-201107-01

DN-DI1, TY C I GRATE (H = 4)
℄ SH 289 STA. 172+00, 63' LT
TE = 723.50
FL 24" = 719.71

CI-DN2, TY I (MOD) W/ I EXT. (H = 5)
℄ SH 289 STA. 170+99, 47' LT
TC = 725.86
FL 24" = 720.35

CI-DN4, TY I (MOD) W/ I EXT. (H = 5)
℄ SH 289 STA. 172+49, 47' LT
TC = 724.89
FL 24" = 719.37
FL 24" = 719.37

CI-DN6, TY I (MOD) W/ I EXT. (H = 5)
℄ SH 289 STA. 173+99, 47' LT
TC = 723.92
FL 24" = 718.50
FL 24" = 718.50

CI-DN8, TY I (MOD) W/ 2 EXT. (H = 5)
℄ SH 289 STA. 174+99.70, 47' LT
TC = 723.57
FL 24" = 718.13
FL 24" = 718.13

EXISTING DRAINAGE EASEMENT

TELEPHONE PEDESTAL

OUTFALL LINE DN1
SH 289 STA. 175+13, 49.00' LT
FL ELEV = 717.43

TELEPHONE LINE

EXIST. R.O.W.

SH 289 STA. 172+00.00, 54.36' LT
(JT DN-DI1)
45° BEND

LAT DN-DI1
(24" RCP)

24" RCP

24" RCP

24" RCP

24" RCP

LINE DN1

SH 289 STA. 172+05.26, 49.00' LT
JT DN 2A

FIBER OPTIC LINE

CULVERT D
℄ SH 289 STA. 174+95.00

171+00 | 172+00 | ℄ SH 289 | 173+00 | 174+00 | 175+00 | 176+00

LINE DN2

LINE DS1

FIBER OPTIC LINE

EXIST. R.O.W.

PROP. R.O.W.

WW

WASTE WATER LINE

WATER LINE

EXISTING DRAINAGE EASEMENT

LAT DN-DI1

PROP. GRND. @ ℄ PIPE
EXIST. GRND. @ ℄ PIPE
GL-DN-DI L
HGL
0.44%
FL 24" = 719.65
FL 24" = 719.68
FL 24" = 719.72
8.50 LF
24" RCP (CL III)
7.50 LF
24" RCP (CL III)
17'
TRENCH PROTECTION

725 | 720 | 715

730 | 725 | 720 | 715 | 710 | 705

EXIST. GRND. @ ℄ PIPE
EXIST. GRND. @ ℄ PIPE
CI-DN2
PROP. GRND. @ GUTTER LINE (G.L.)
CI-DN4
HGL
CI-DN6
CI-DN8
PROP. 2 - 8' x 7' MBC

0.67%
0.67%
0.60%
0.39%
5.42%

104.00 LF
24" RCP (CL III)

41.00 LF
24" RCP (CL III)

145.00 LF
24" RCP (CL III)

96.00 LF
24" RCP (CL III)

10.50 LF
24" RCP (CL III)

LINE DN1

171+00 | 172+00 | 173+00 | 174+00 | 175+00 | 176+00

STATE OF TEXAS
HASSAN SAM MOGHADASSI
84231
LICENSED
PROFESSIONAL ENGINEER

H. Moghadassi, P.E. 07/12/11
Signature of Registrant & Date

Texas Department of Transportation
© 2011

SH 289
DRAINAGE PLAN/PROFILE
LINE DN1

SCALE: 1"=50'

SHEET 1 OF 5

DESIGN	FED. RD. DIV. NO.	STATE PROJECT NO.		HIGHWAY NO.
SHM	6	SEE TITLE SHEET		SH 289
GRAPHICS	STATE	DISTRICT	COUNTY	SHEET NO.
WAV	TEXAS	18	COLLIN	
CHECK	CONTROL	SECTION	JOB	225
CHECK	0091	03	021	

P-201107-01

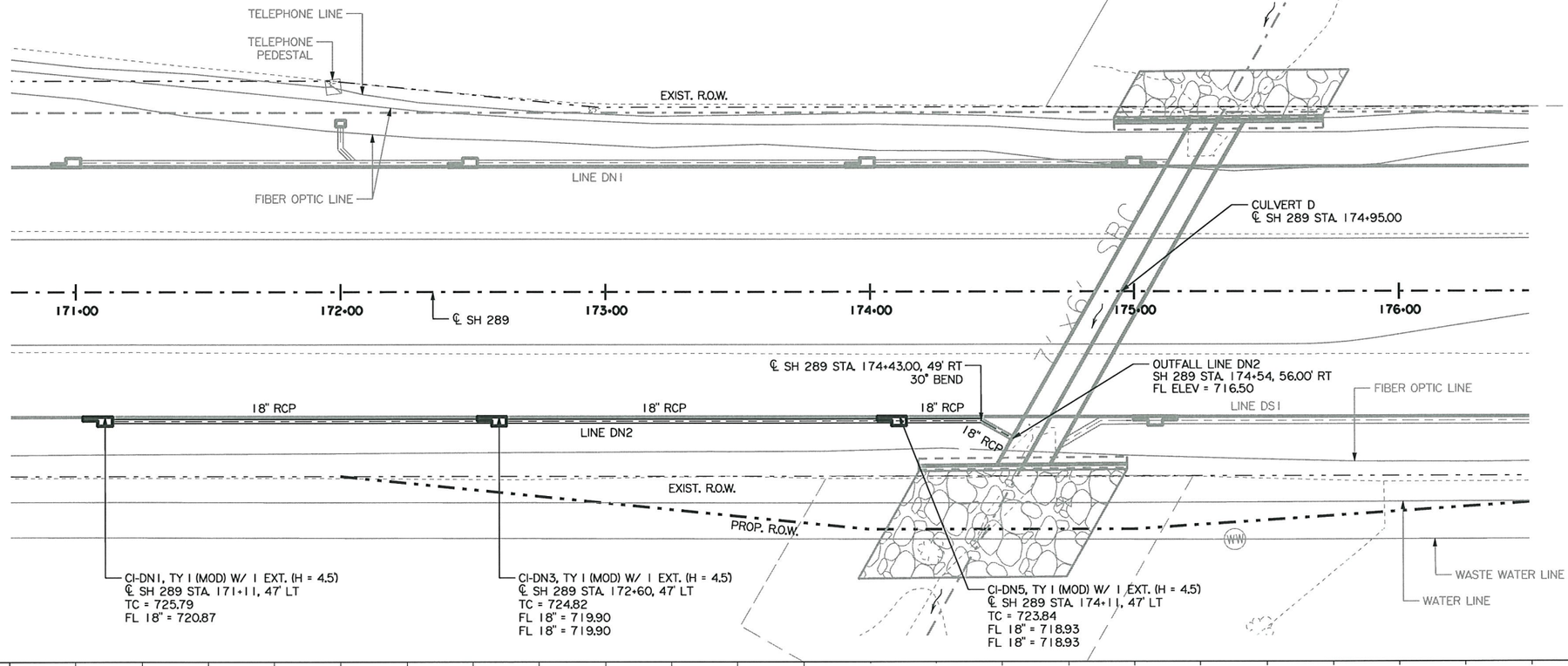

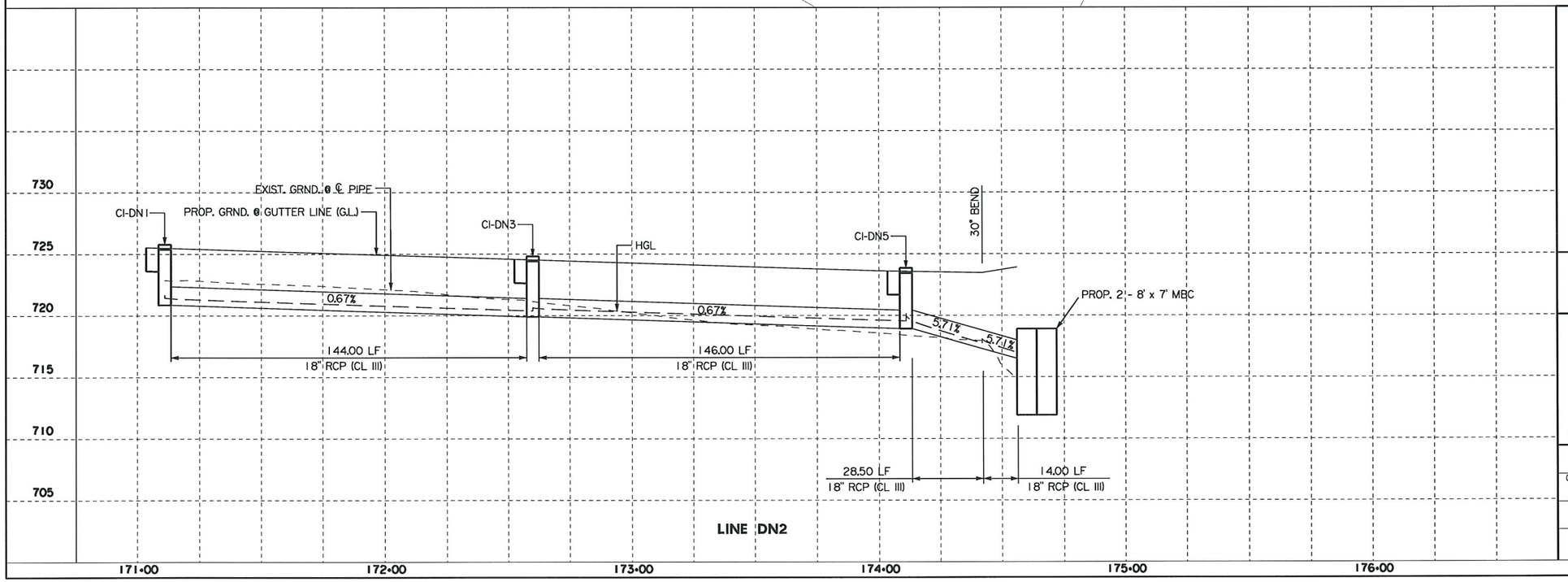

STATE OF TEXAS
HASSAN SAM MOGHADASSI
84231
LICENSED PROFESSIONAL ENGINEER

H. Moghadassi, P.E. 07112111
Signature of Registrant & Date

Texas Department of Transportation
© 2011

SH 289
DRAINAGE PLAN/PROFILE
LINE DN2

SCALE: 1"=50' SHEET 2 OF 5

DESIGN	FED. RD. DIV. NO.	STATE PROJECT NO.		HIGHWAY NO.
SHM	6	SEE TITLE SHEET		SH 289
GRAPHICS	STATE	DISTRICT	COUNTY	SHEET NO.
WAV	TEXAS	18	COLLIN	226
CHECK	CONTROL	SECTION	JOB	
CHECK	0091	03	021	

P-201107-01

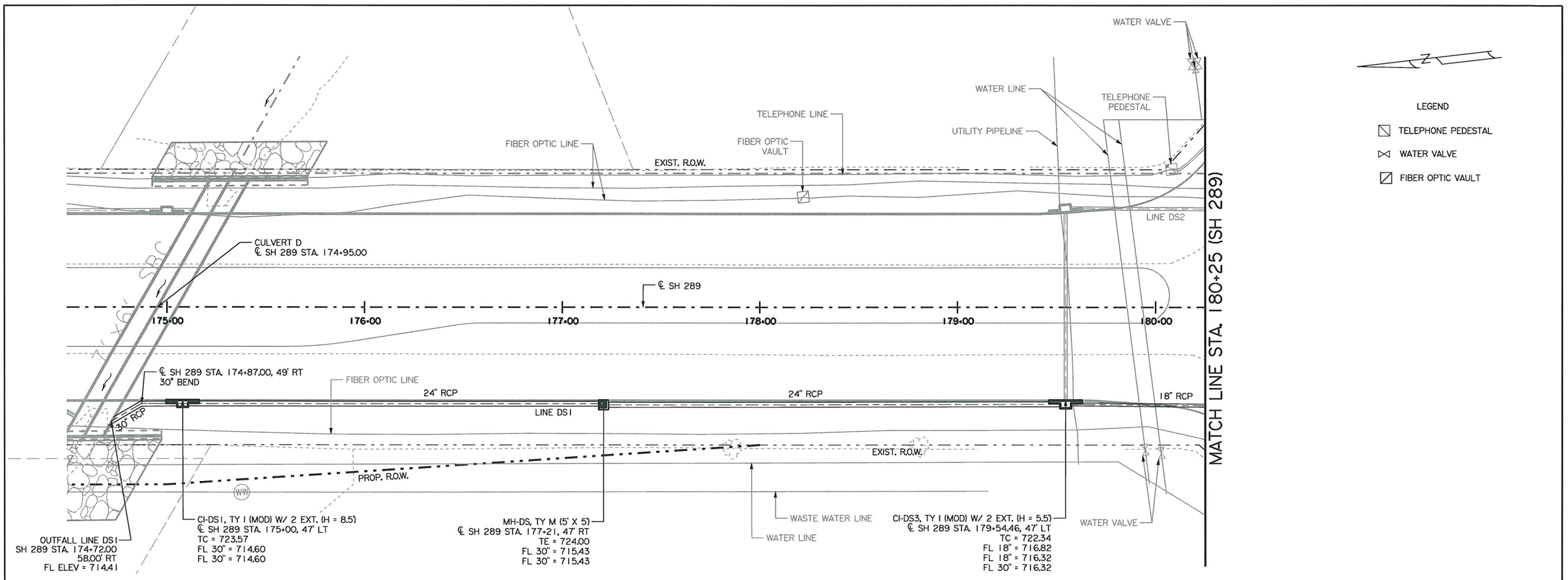

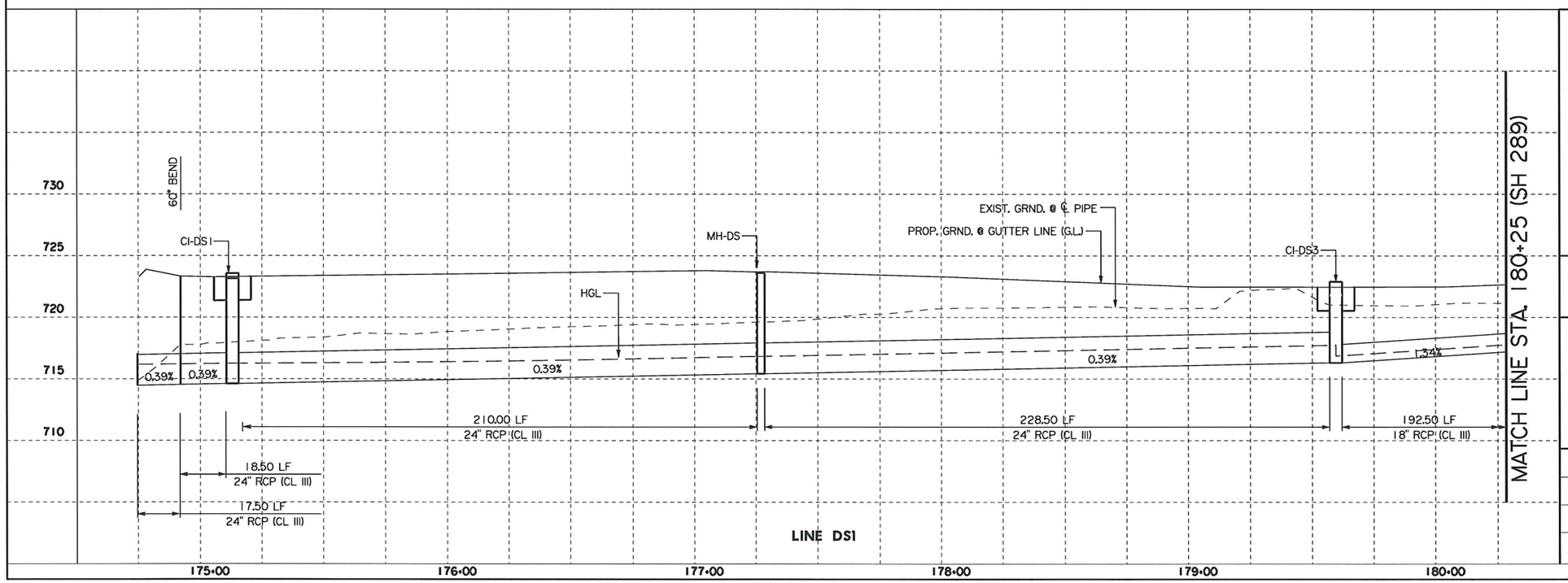

STATE OF TEXAS
HASSAN SAM MOGHADASSI
84231
LICENSED
PROFESSIONAL ENGINEER

H. Moghadassi, P.E. 07/13/11
Signature of Registrant & Date

Texas Department of Transportation
© 2011

SH 289
DRAINAGE PLAN/PROFILE
LINE DS1

SCALE: 1"=50'

SHEET 3 OF 5

DESIGN	FED. RD. DIV. NO.	STATE PROJECT NO.		HIGHWAY NO.
SHM	6	SEE TITLE SHEET		SH 289
GRAPHICS WAV	STATE	DISTRICT	COUNTY	SHEET NO.
CHECK	TEXAS	18	COLLIN	227
CHECK	CONTROL	SECTION	JOB	
	0091	03	021	

P-201107-01

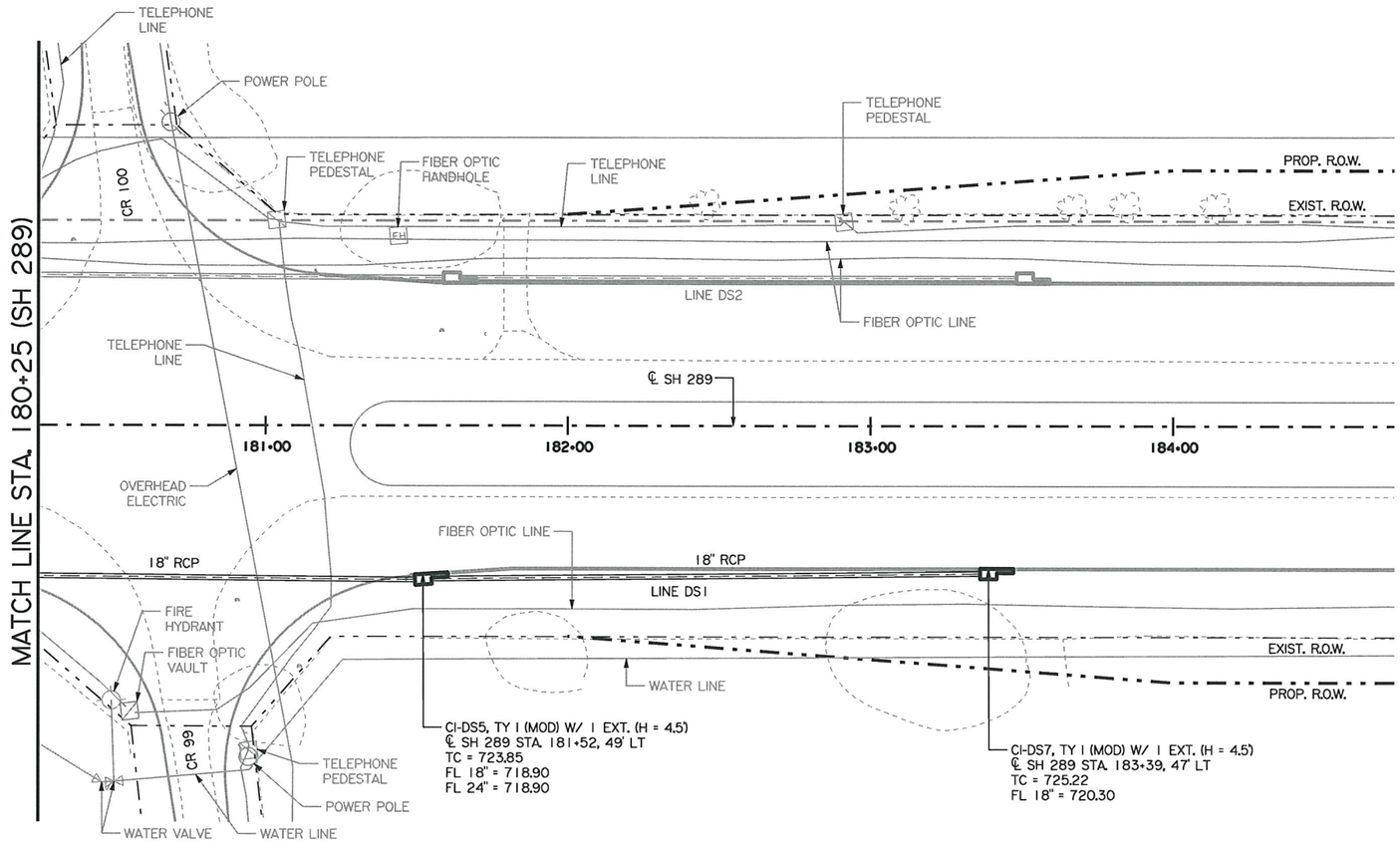

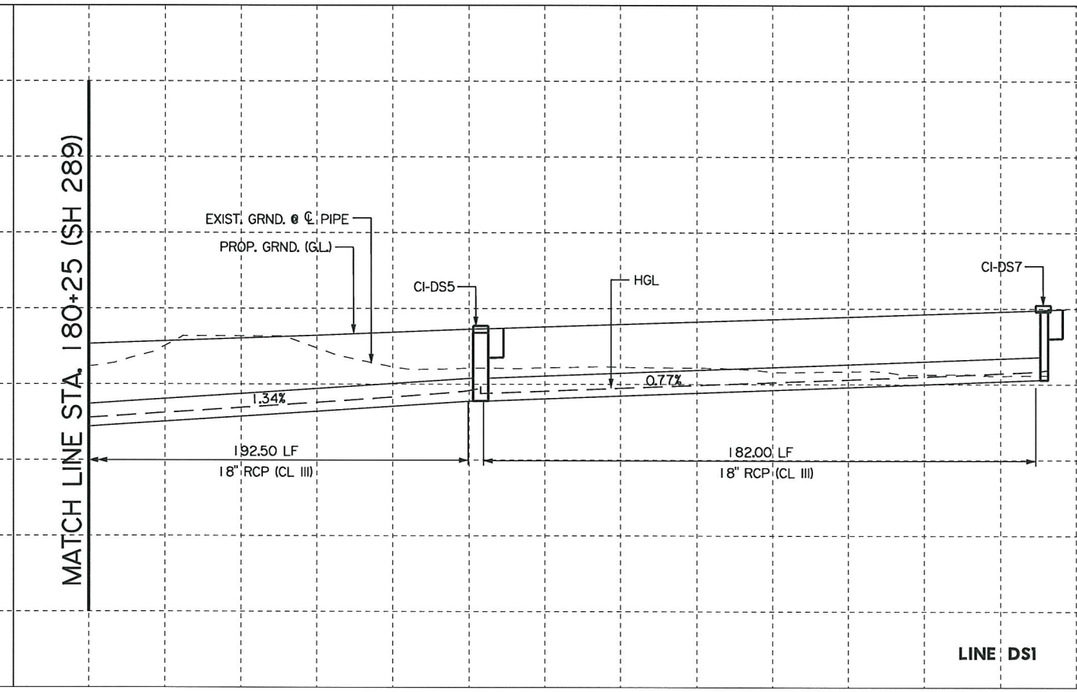

HASSAN SAM MOGHADASSI
84231
LICENSED PROFESSIONAL ENGINEER
STATE OF TEXAS

H. Moghadassi, P.E. 07/12/11
Signature of Registrant & Date

Texas Department of Transportation
© 2011

SH 289
DRAINAGE PLAN/PROFILE
LINE DS1

SCALE: 1"=50' SHEET 4 OF 5

DESIGN	FED. RD. DIV. NO.	STATE PROJECT NO.		HIGHWAY NO.
SHM	6	SEE TITLE SHEET		SH 289
GRAPHICS WAV	STATE	DISTRICT	COUNTY	SHEET NO.
CHECK	TEXAS	18	COLLIN	228
CHECK	CONTROL	SECTION	JOB	
	0091	03	021	

P-201107-01

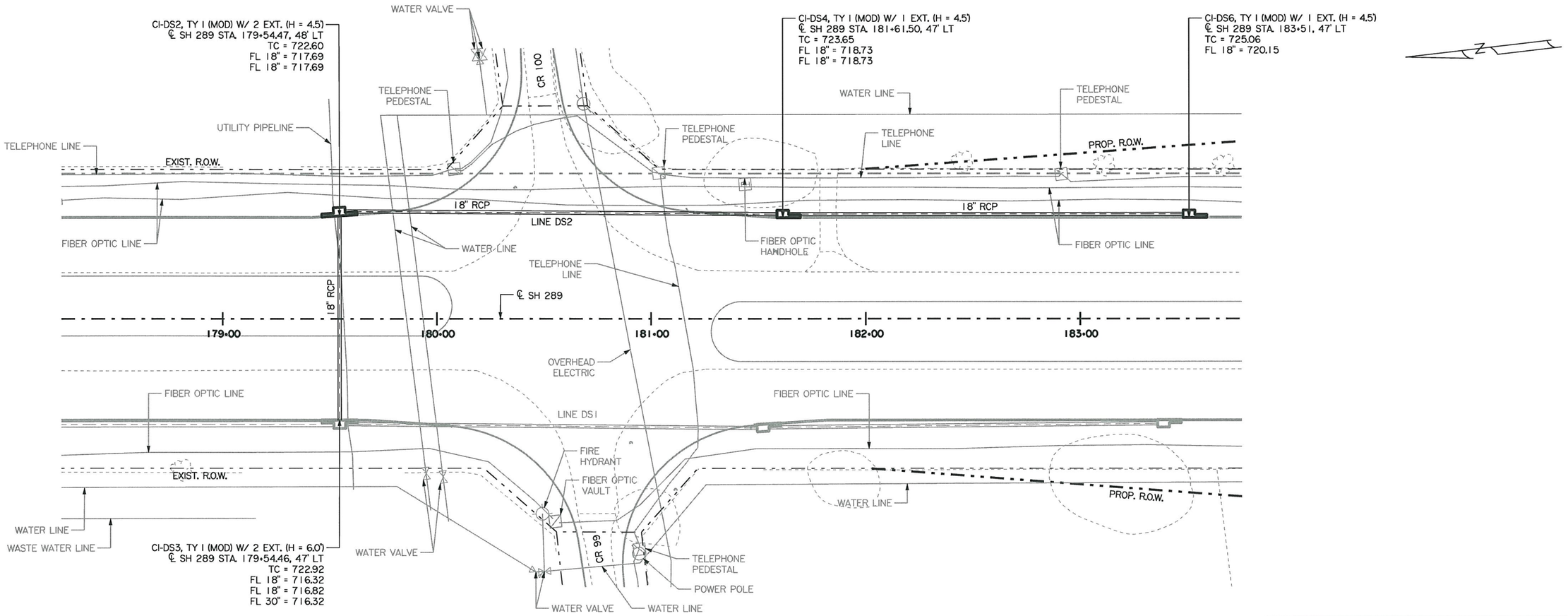

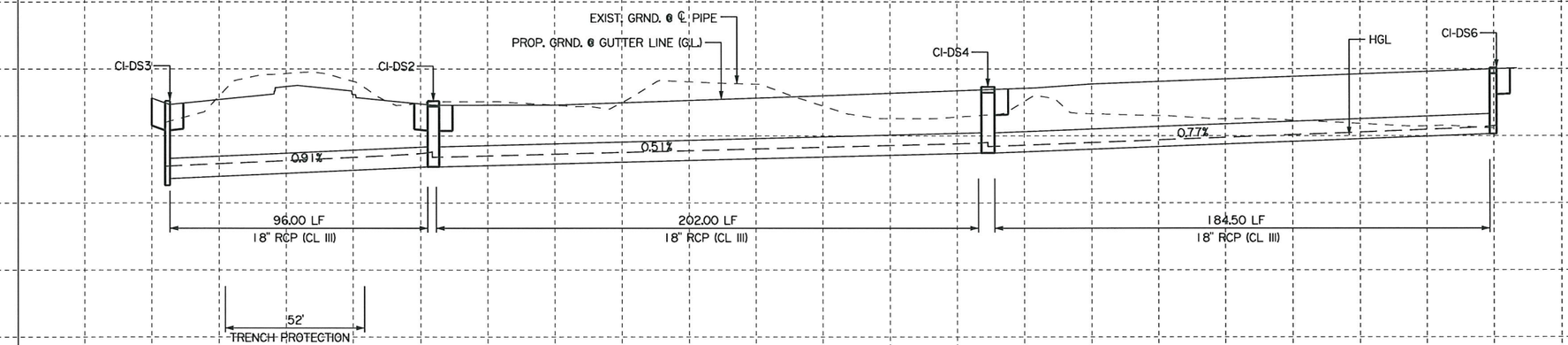

STATE OF TEXAS
HASSAN SAM MOGHADASSI
84231
LICENSED
PROFESSIONAL ENGINEER

H. Moghadassi, P.E. 07/12/11
Signature of Registrant & Date

Texas Department of Transportation
© 2011

SH 289
DRAINAGE PLAN/PROFILE
LINE DS2

SCALE: 1"=50'

SHEET 5 OF 5

DESIGN	FED. RD. DIV. NO.	STATE PROJECT NO.		HIGHWAY NO.
SHM	6	SEE TITLE SHEET		SH 289
GRAPHICS WAV	STATE	DISTRICT	COUNTY	SHEET NO.
CHECK	TEXAS	18	COLLIN	229
CHECK	CONTROL	SECTION	JOB	
	0091	03	021	

P-201107-01

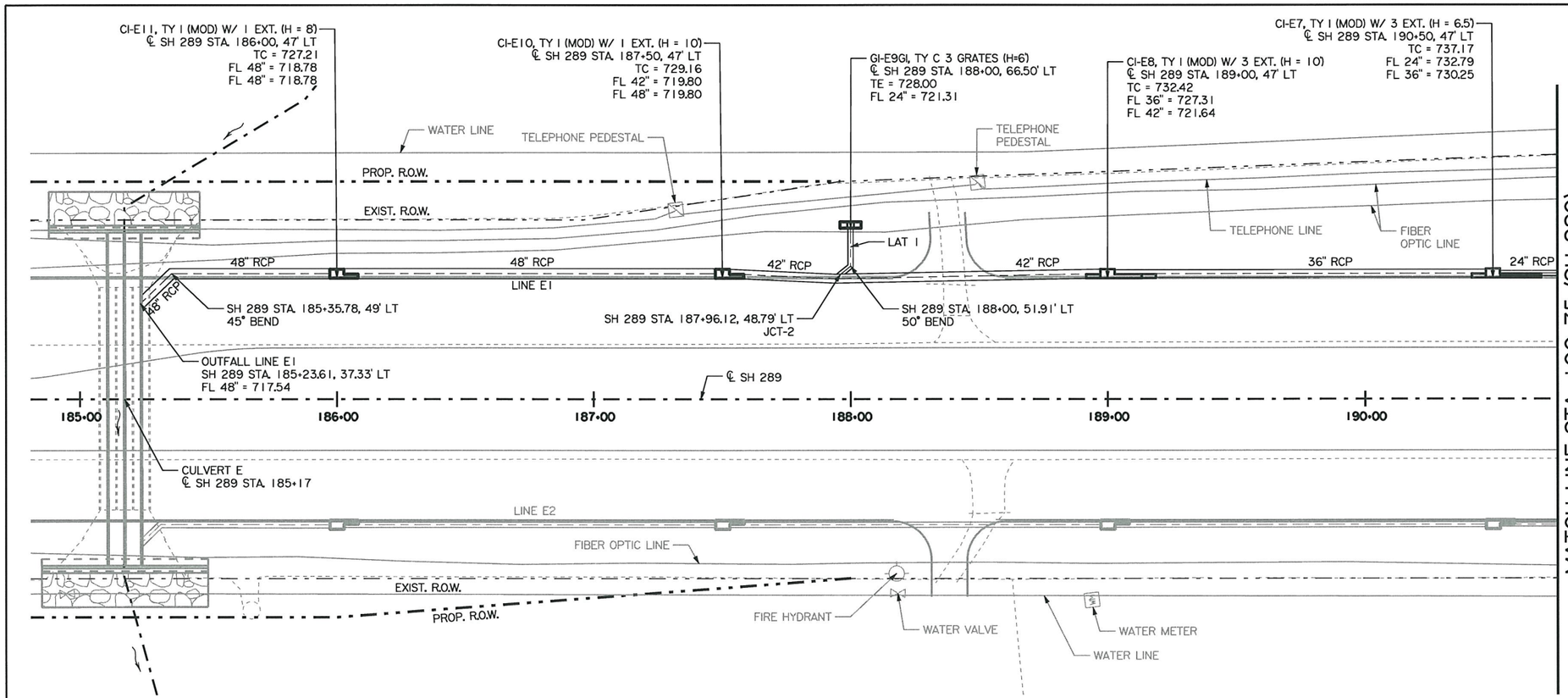

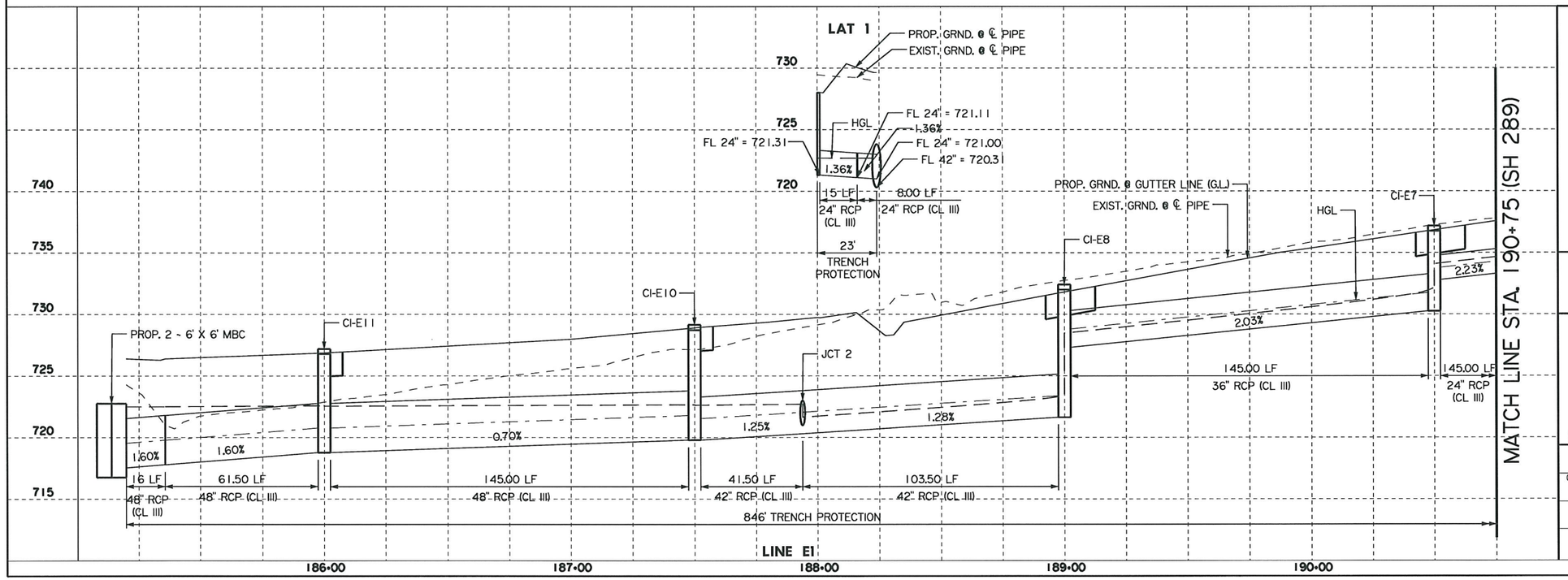

STATE OF TEXAS
HASSAN SAM MOGHADASSI
84231
LICENSED
PROFESSIONAL ENGINEER

H. Moghadassi, P.E. 07/12/11
Signature of Registrant & Date

Texas Department of Transportation
© 2011

SH 289
DRAINAGE PLAN/PROFILE
LINE E1

SCALE: 1"=50' SHEET 1 OF 6

DESIGN	FED. RD. DIV. NO.	STATE PROJECT NO.		HIGHWAY NO.
SHM	6	SEE TITLE SHEET		SH 289
GRAPHICS	STATE	DISTRICT	COUNTY	SHEET NO.
WAV	TEXAS	18	COLLIN	230
CHECK	CONTROL	SECTION	JOB	
CHECK	0091	03	021	

P-201107-01

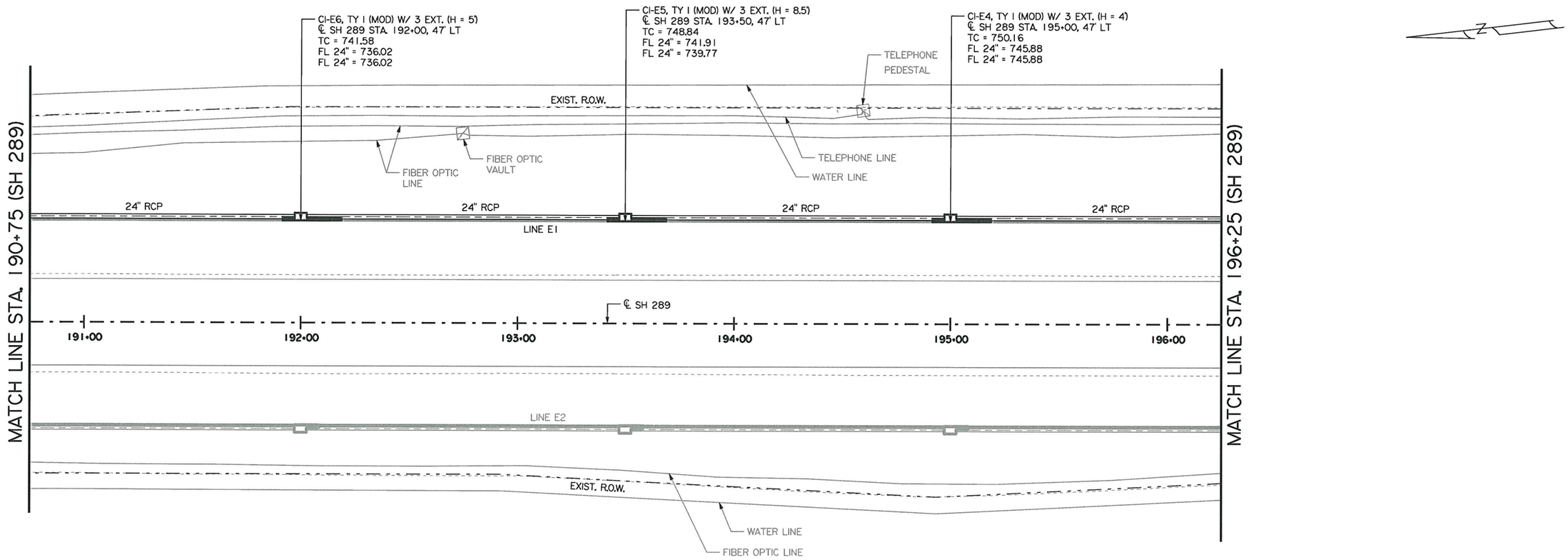

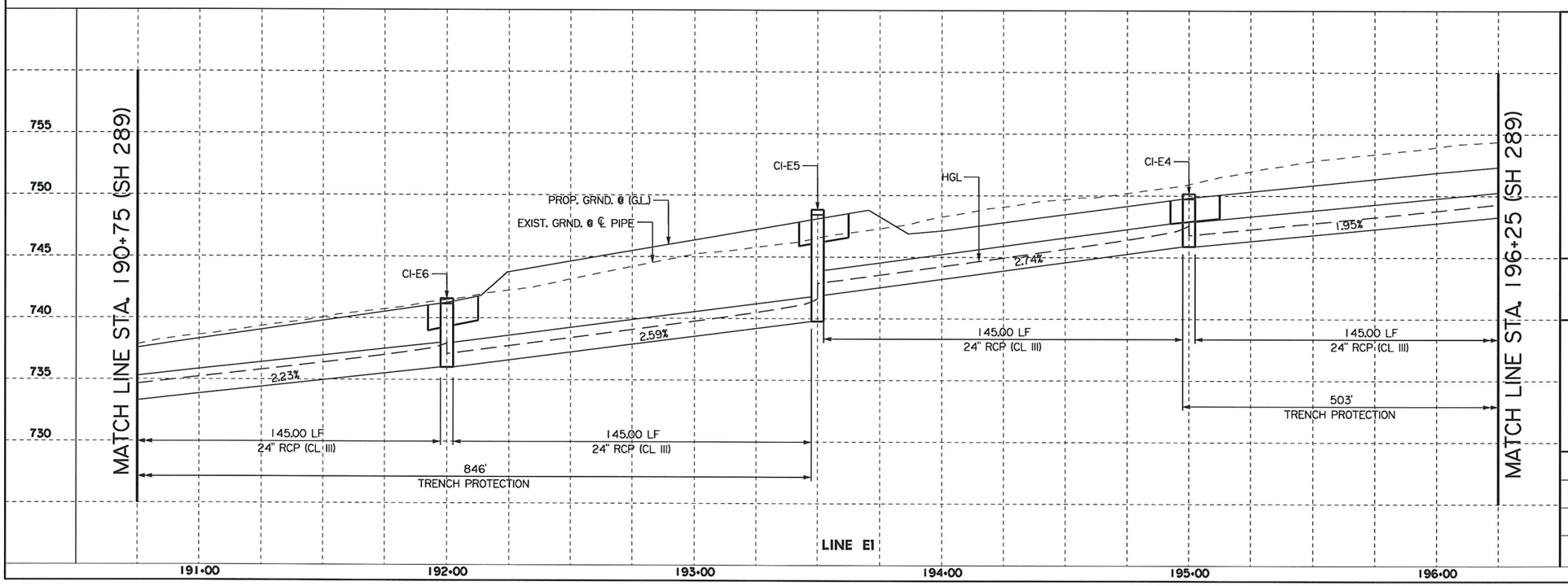

STATE OF TEXAS
HASSAN SAM MOGHADASSI
84231
LICENSED PROFESSIONAL ENGINEER

H. Moghadassi, P.E. 07/12/11
Signature of Registrant & Date

Texas Department of Transportation
© 2011

SH 289
DRAINAGE PLAN/PROFILE
LINE E1

SCALE: 1"=50' SHEET 2 OF 6

DESIGN	FED. RD. DIV. NO.	STATE PROJECT NO.		HIGHWAY NO.
SHM	6	SEE TITLE SHEET		SH 289
GRAPHICS	STATE	DISTRICT	COUNTY	SHEET NO.
WAV	TEXAS	18	COLLIN	231
CHECK	CONTROL	SECTION	JOB	
CHECK	0091	03	021	

P-201107-01

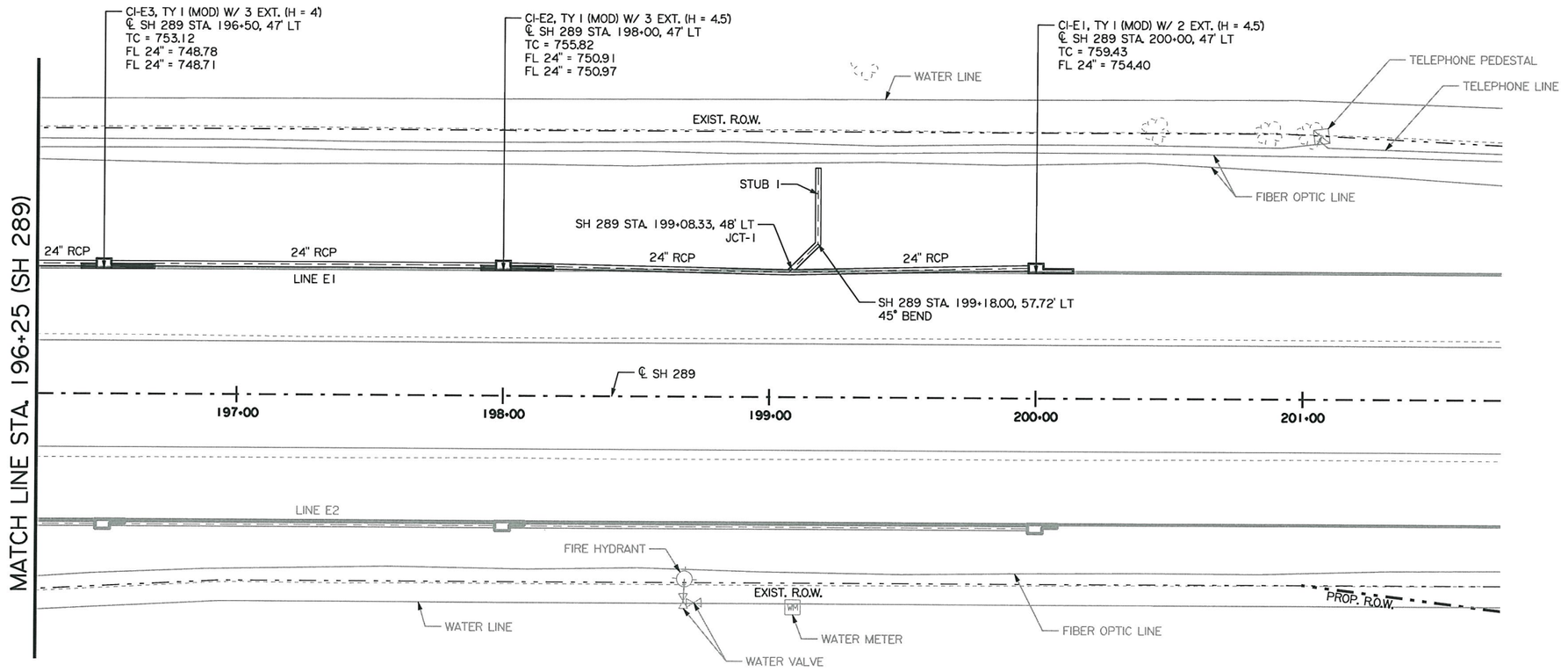

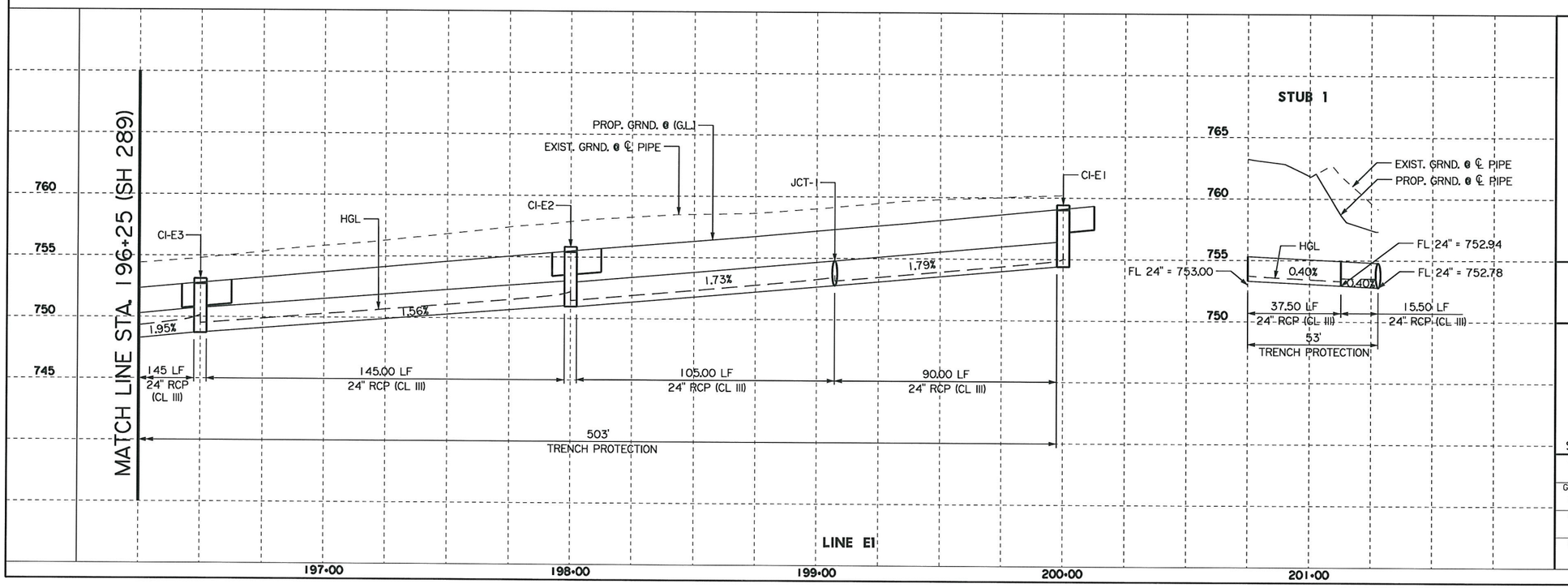

STATE OF TEXAS
HASSAN SAM MOGHADASSI
84231
LICENSED PROFESSIONAL ENGINEER

H. Moghadassi P.E. 07/12/11
Signature of Registrant & Date

Texas Department of Transportation
© 2011

SH 289
DRAINAGE PLAN/PROFILE
LINE E1

SCALE: 1"=50' SHEET 3 OF 6

DESIGN	FED. RD. DIV. NO.	STATE PROJECT NO.		HIGHWAY NO.
SHM	6	SEE TITLE SHEET		SH 289
GRAPHICS WAV	STATE	DISTRICT	COUNTY	SHEET NO.
CHECK	TEXAS	18	COLLIN	232
CHECK	CONTROL	SECTION	JOB	
	0091	03	021	

P-201107-01

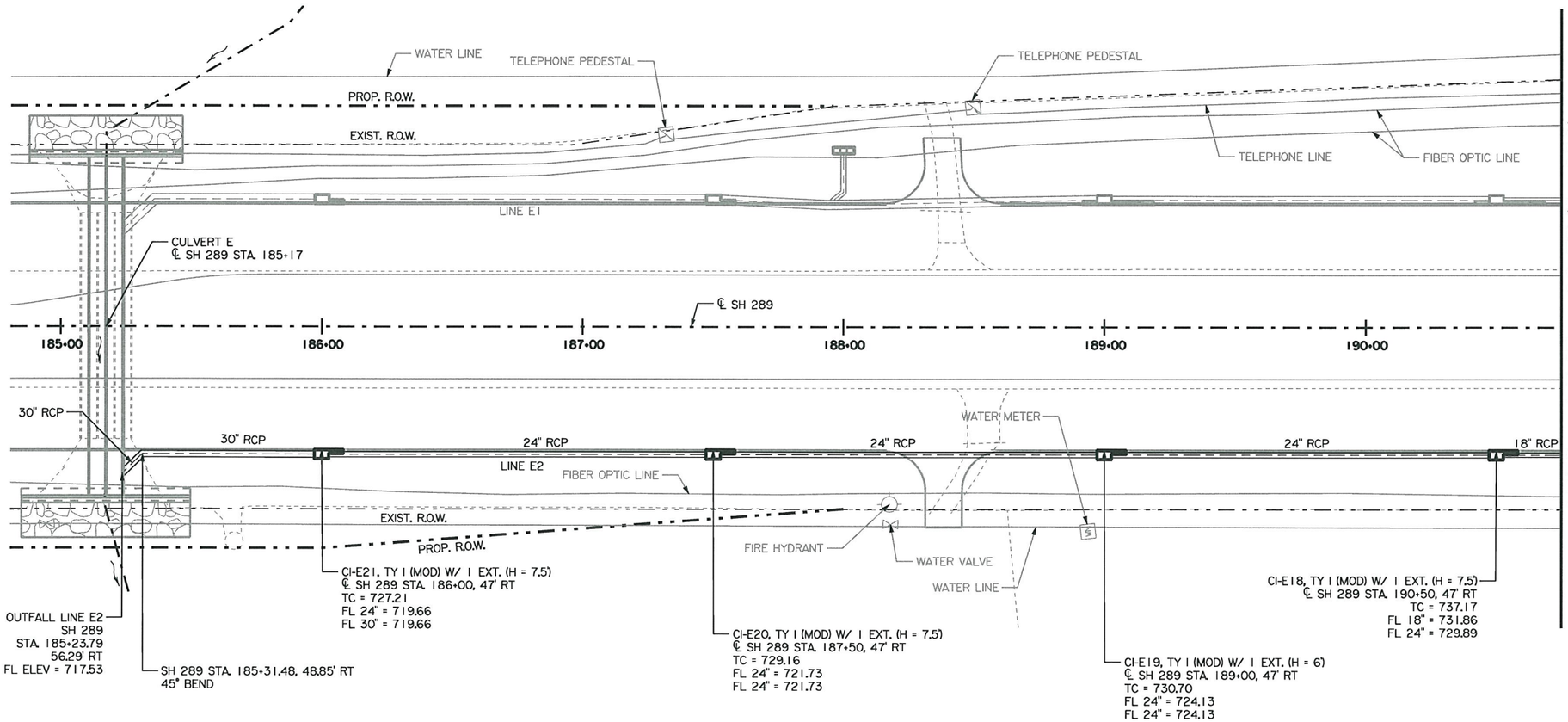

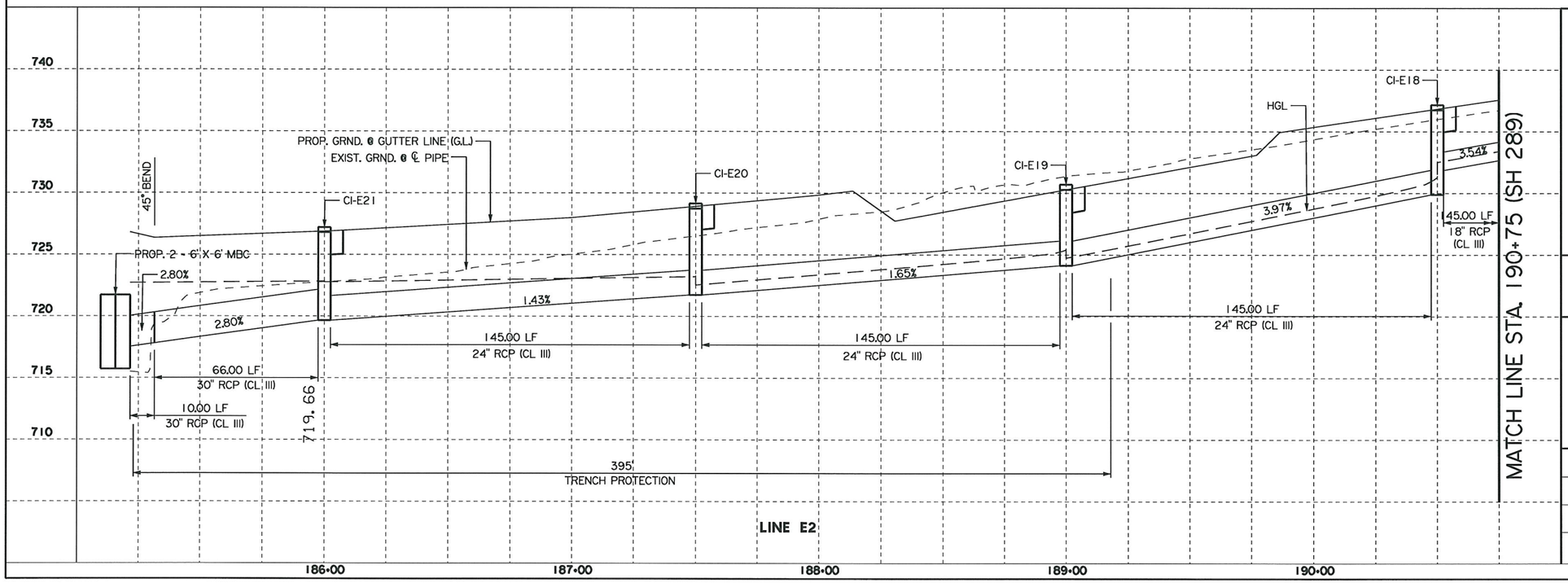

STATE OF TEXAS
HASSAN SAM MOGHADASSI
84231
LICENSED
PROFESSIONAL ENGINEER

H. Moghadassi, P.E. 07/12/11
Signature of Registrant & Date

Texas Department of Transportation
© 2011

SH 289
DRAINAGE PLAN/PROFILE
LINE E2

SCALE: 1"=50'

SHEET 4 OF 6

DESIGN	FED. RD. DIV. NO.	STATE PROJECT NO.		HIGHWAY NO.
SHM	6	SEE TITLE SHEET		SH 289
GRAPHICS	STATE	DISTRICT	COUNTY	SHEET NO.
WAV	TEXAS	18	COLLIN	233
CHECK	CONTROL	SECTION	JOB	
CHECK	0091	03	021	

P-201107-01

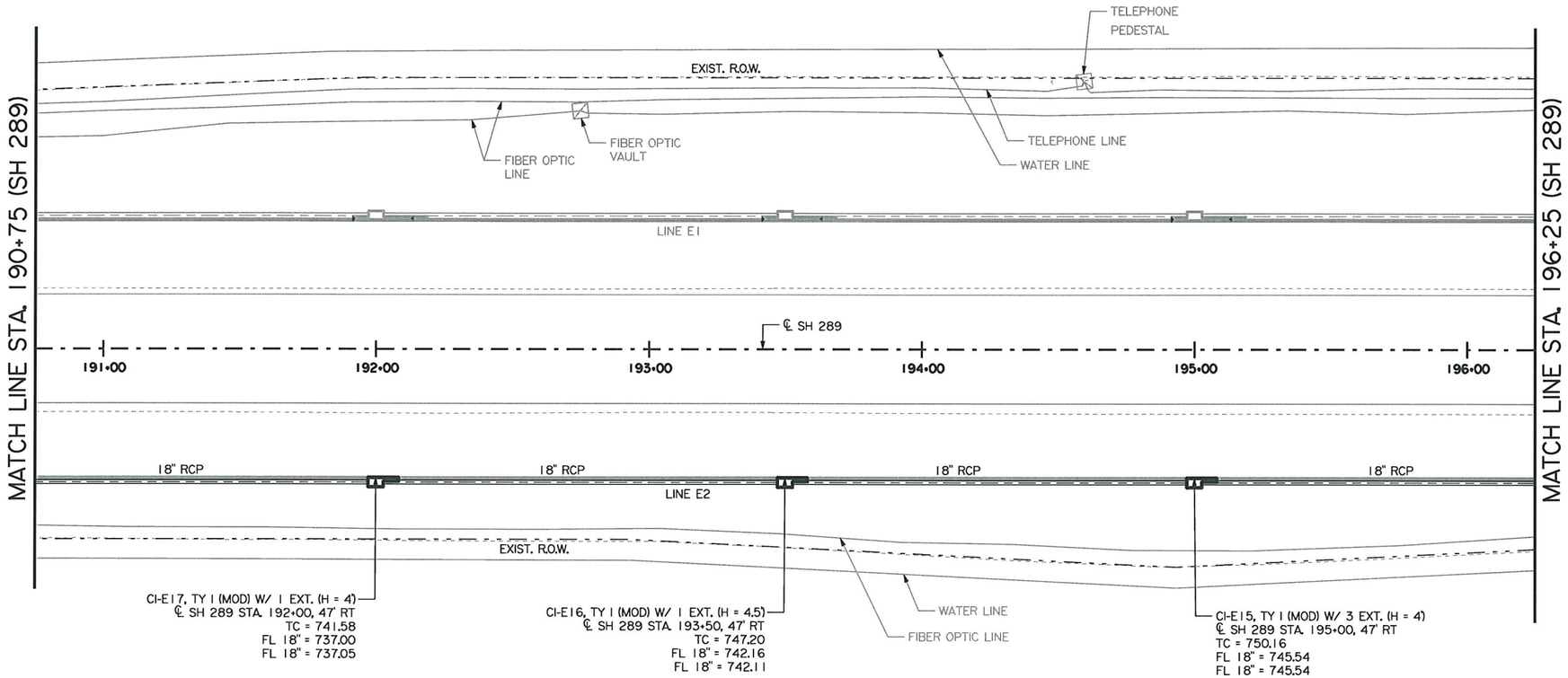

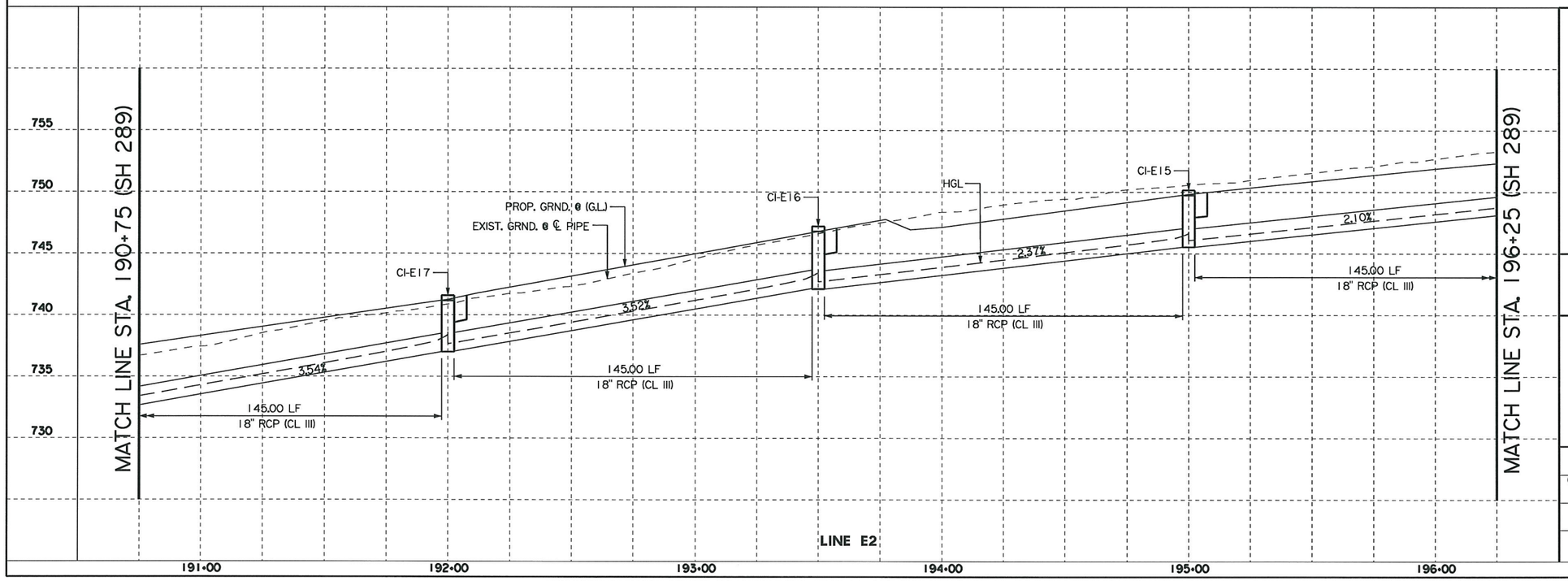

HASSAN SAM MOGHADASSI
84231
LICENSED PROFESSIONAL ENGINEER
STATE OF TEXAS

H. Moghadassi, P.E. 07/12/11
Signature of Registrant & Date

Texas Department of Transportation
© 2011

SH 289
DRAINAGE PLAN/PROFILE
LINE E2

SCALE: 1"=50' SHEET 5 OF 6

DESIGN	FED. RD. DIV. NO.	STATE PROJECT NO.		HIGHWAY NO.
SHM	6	SEE TITLE SHEET		SH 289
GRAPHICS	STATE	DISTRICT	COUNTY	SHEET NO.
WAV	TEXAS	18	COLLIN	
CHECK	CONTROL	SECTION	JOB	234
CHECK	0091	03	021	

P-201107-01

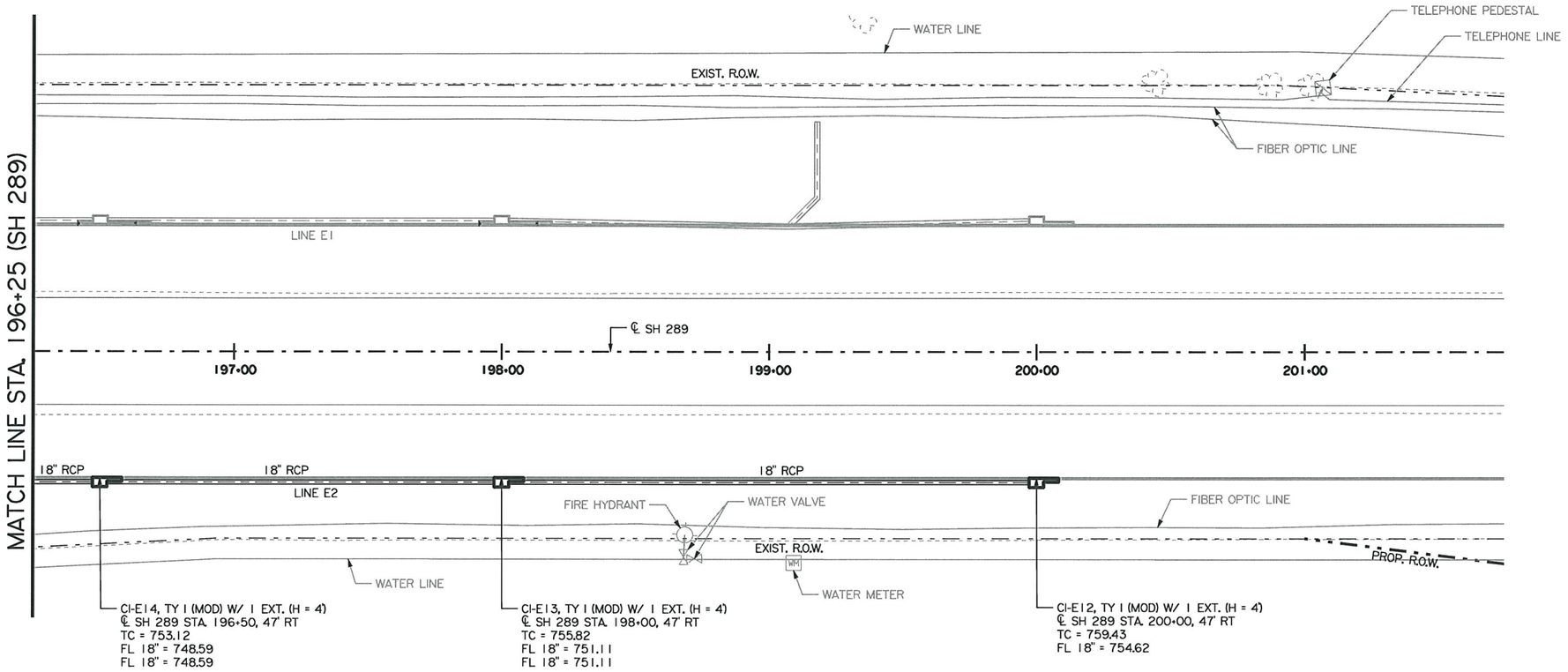

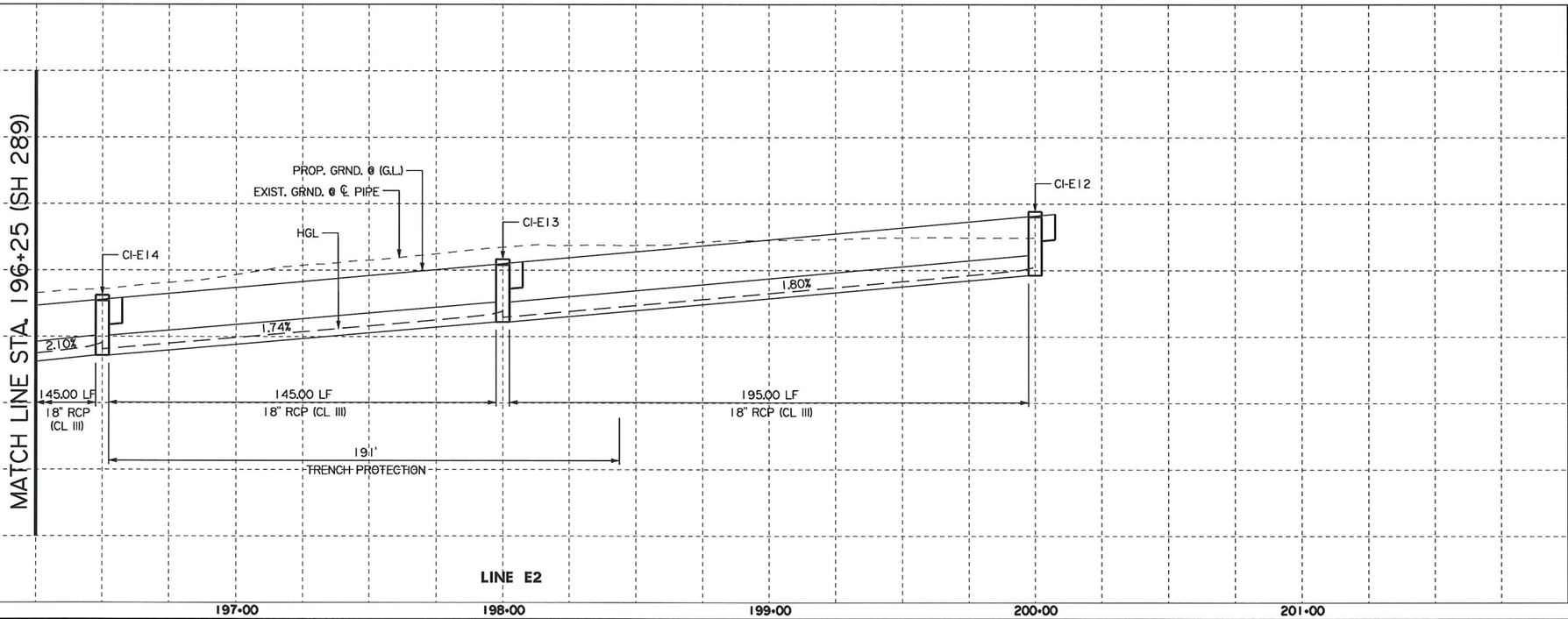

STATE OF TEXAS
HASSAN SAM MOGHADASSI
84231
LICENSED PROFESSIONAL ENGINEER

H. Moghadassi, P.E. 07/12/11
Signature of Registrant & Date

Texas Department of Transportation
© 2011

SH 289
DRAINAGE PLAN/PROFILE
LINE E2

SCALE: 1"=50' SHEET 6 OF 6

DESIGN	FED. RD. DIV. NO.	STATE PROJECT NO.		HIGHWAY NO.
SHM	6	SEE TITLE SHEET		SH 289
GRAPHICS: WAV	STATE	DISTRICT	COUNTY	SHEET NO.
CHECK	TEXAS	18	COLLIN	235
CHECK	CONTROL	SECTION	JOB	
	0091	03	021	

P-201107-01

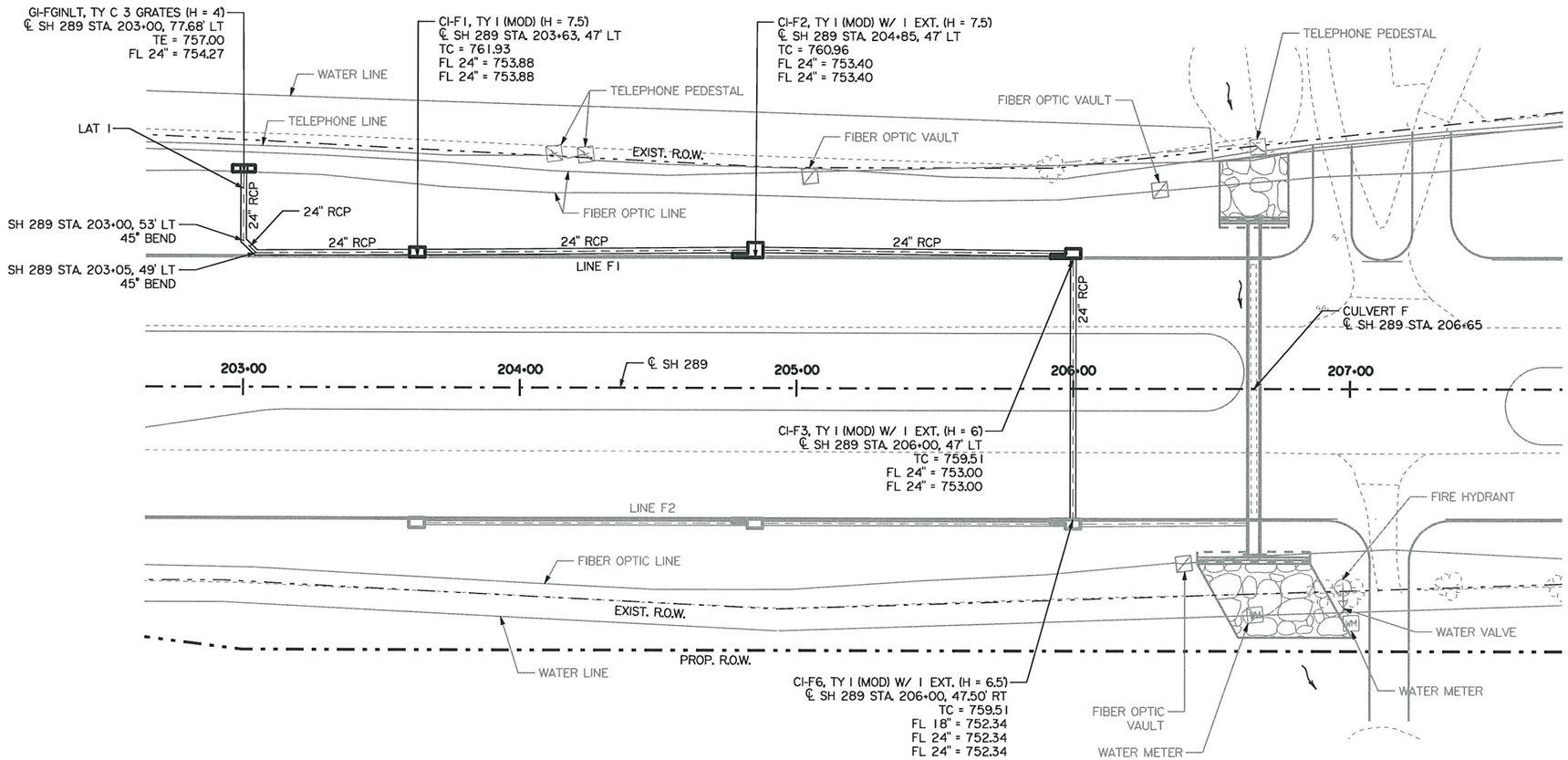

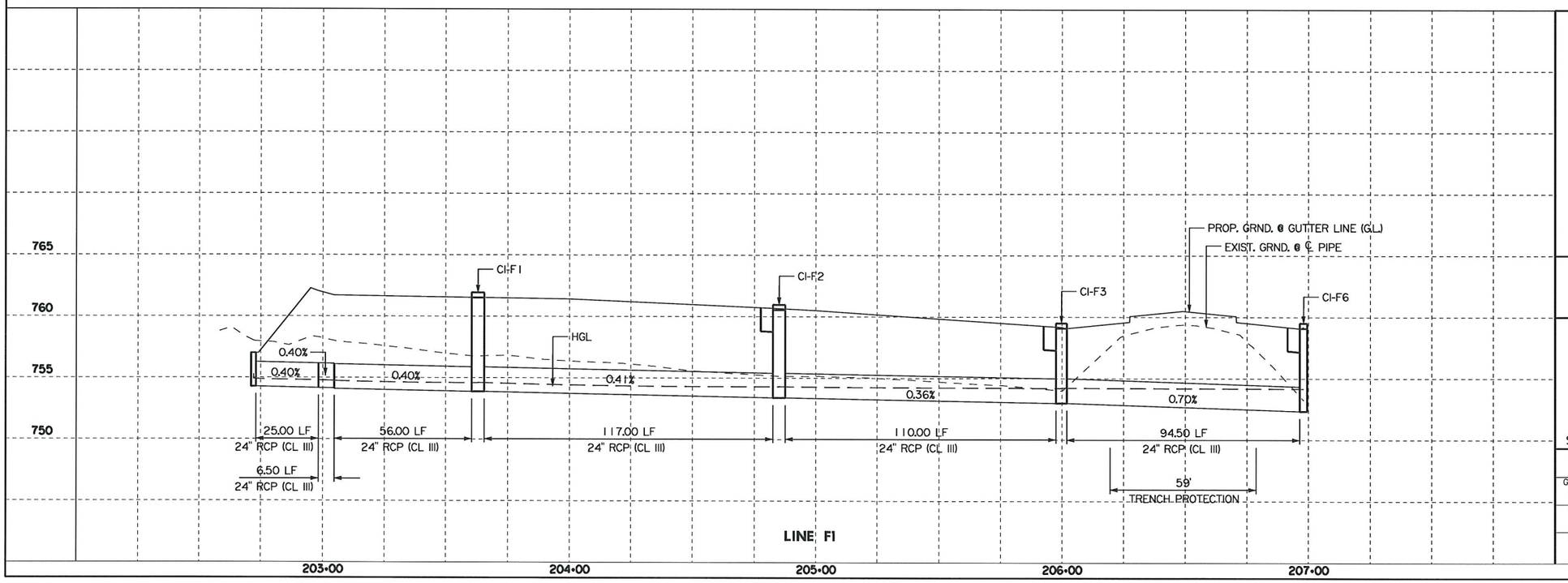

STATE OF TEXAS
HASSAN SAM MOGHADASSI
84231
LICENSED
PROFESSIONAL ENGINEER

H. Moghadassi, P.E. 07/12/11
Signature of Registrant & Date

Texas Department of Transportation
© 2011

SH 289
DRAINAGE PLAN/PROFILE
LINE F1

SCALE: 1"=50' SHEET 1 OF 2

DESIGN	FED. RD. DIV. NO.	STATE PROJECT NO.		HIGHWAY NO.
SHM	6	SEE TITLE SHEET		SH 289
GRAPHICS	STATE	DISTRICT	COUNTY	SHEET NO.
WAV	TEXAS	18	COLLIN	
CHECK	CONTROL	SECTION	JOB	236
CHECK	0091	03	021	

P-201107-01

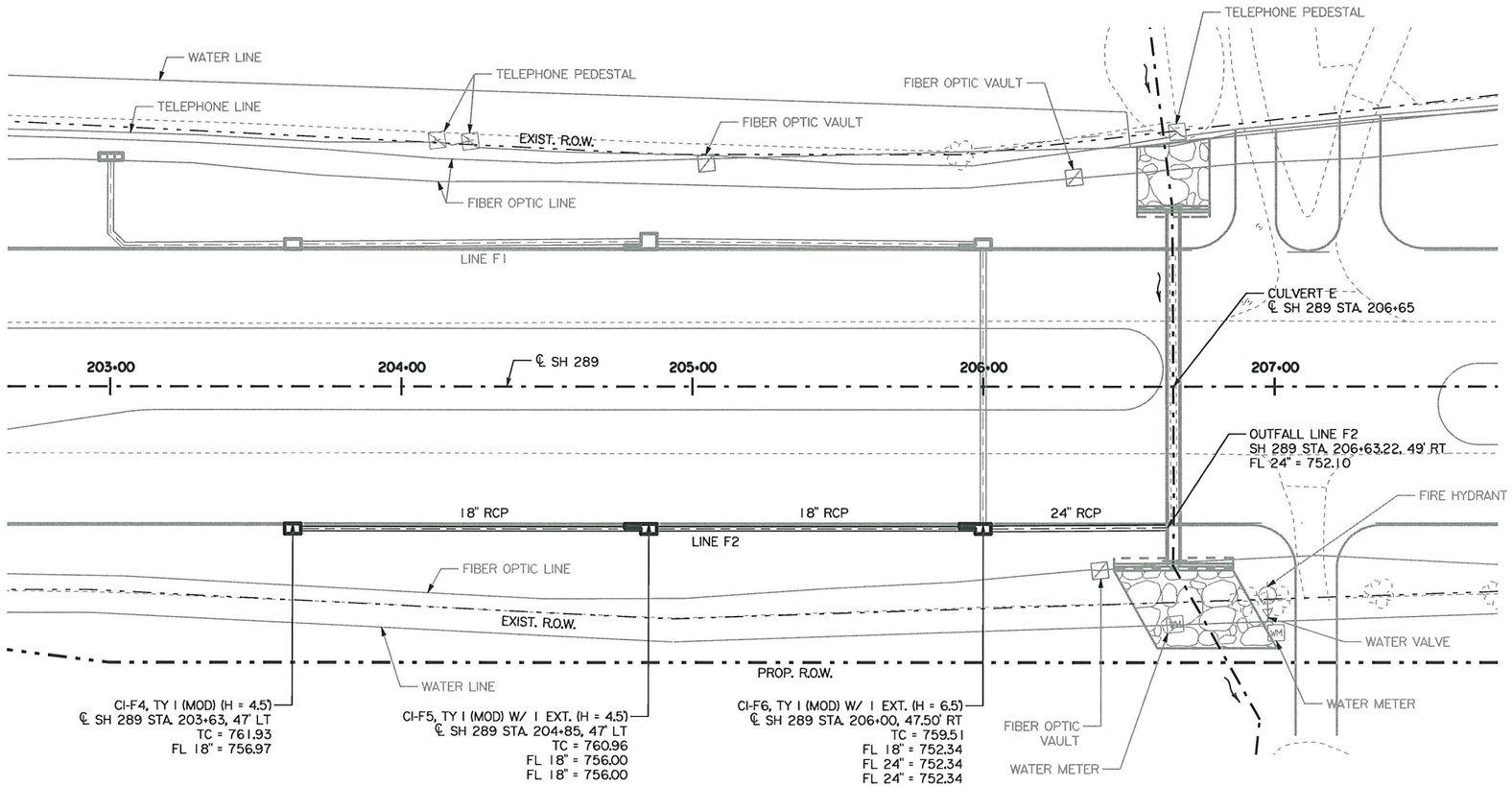

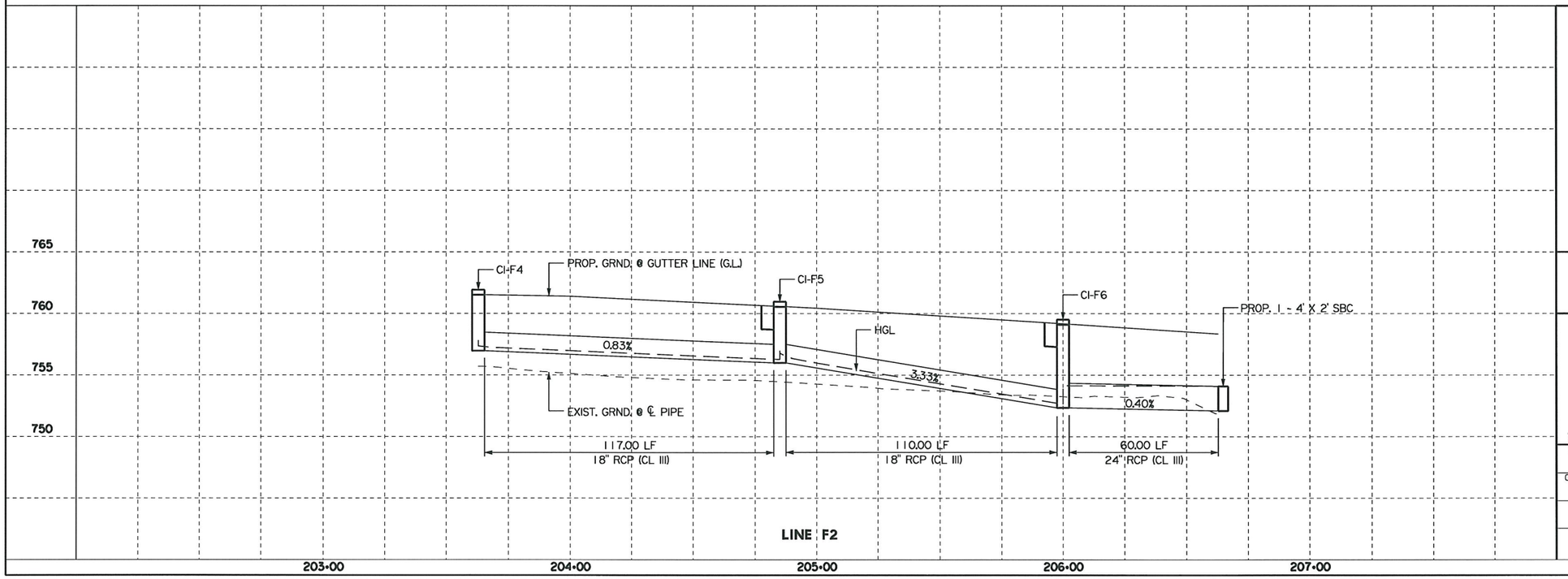

STATE OF TEXAS
HASSAN SAM MOGHADASSI
84231
LICENSED
PROFESSIONAL ENGINEER

H. Moghadassi, P.E. 07/12/11
Signature of Registrant & Date

Texas Department of Transportation
© 2011

SH 289
DRAINAGE PLAN/PROFILE
LINE F2

SCALE: 1"=50' SHEET 2 OF 2

DESIGN	FED. RD. DIV. NO.	STATE PROJECT NO.		HIGHWAY NO.
SHM	6	SEE TITLE SHEET		SH 289
GRAPHICS WAV	STATE	DISTRICT	COUNTY	SHEET NO.
CHECK	TEXAS	18	COLLIN	237
CHECK	CONTROL	SECTION	JOB	
	0091	03	021	

P-201107-01

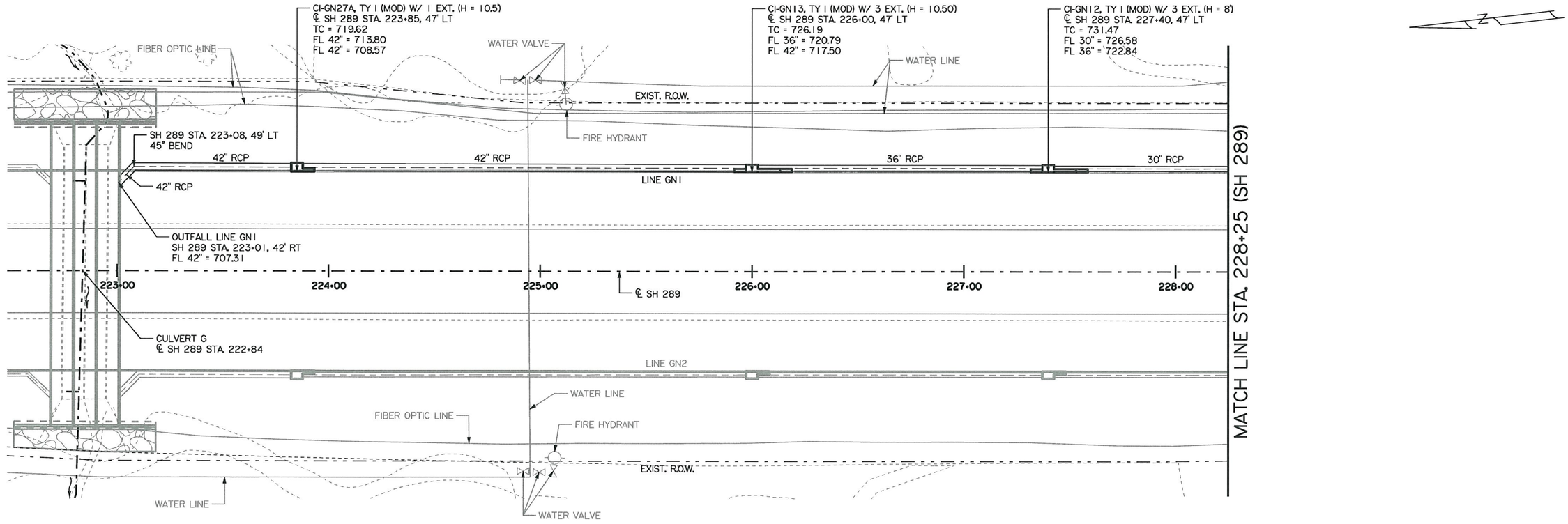

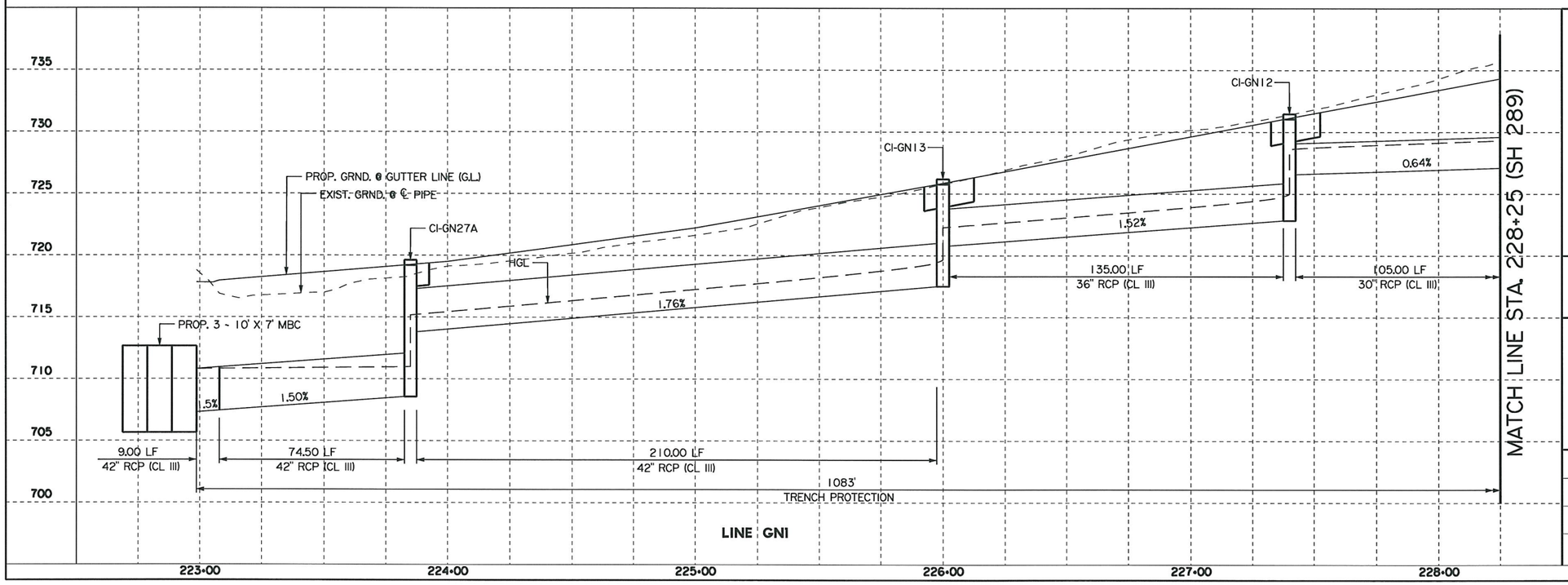

H. Moghadassi, P.E. 07/12/11
Signature of Registrant & Date

Texas Department of Transportation
© 2011

SH 289
DRAINAGE PLAN/PROFILE
LINE GN1

SCALE: 1"=50' SHEET 1 OF 14

DESIGN	FED. RD. DIV. NO.	STATE PROJECT NO.		HIGHWAY NO.
SHM	6	SEE TITLE SHEET		SH 289
GRAPHICS	STATE	DISTRICT	COUNTY	SHEET NO.
WAV	TEXAS	18	COLLIN	
CHECK	CONTROL	SECTION	JOB	238
CHECK	0091	03	021	

P-201107-01

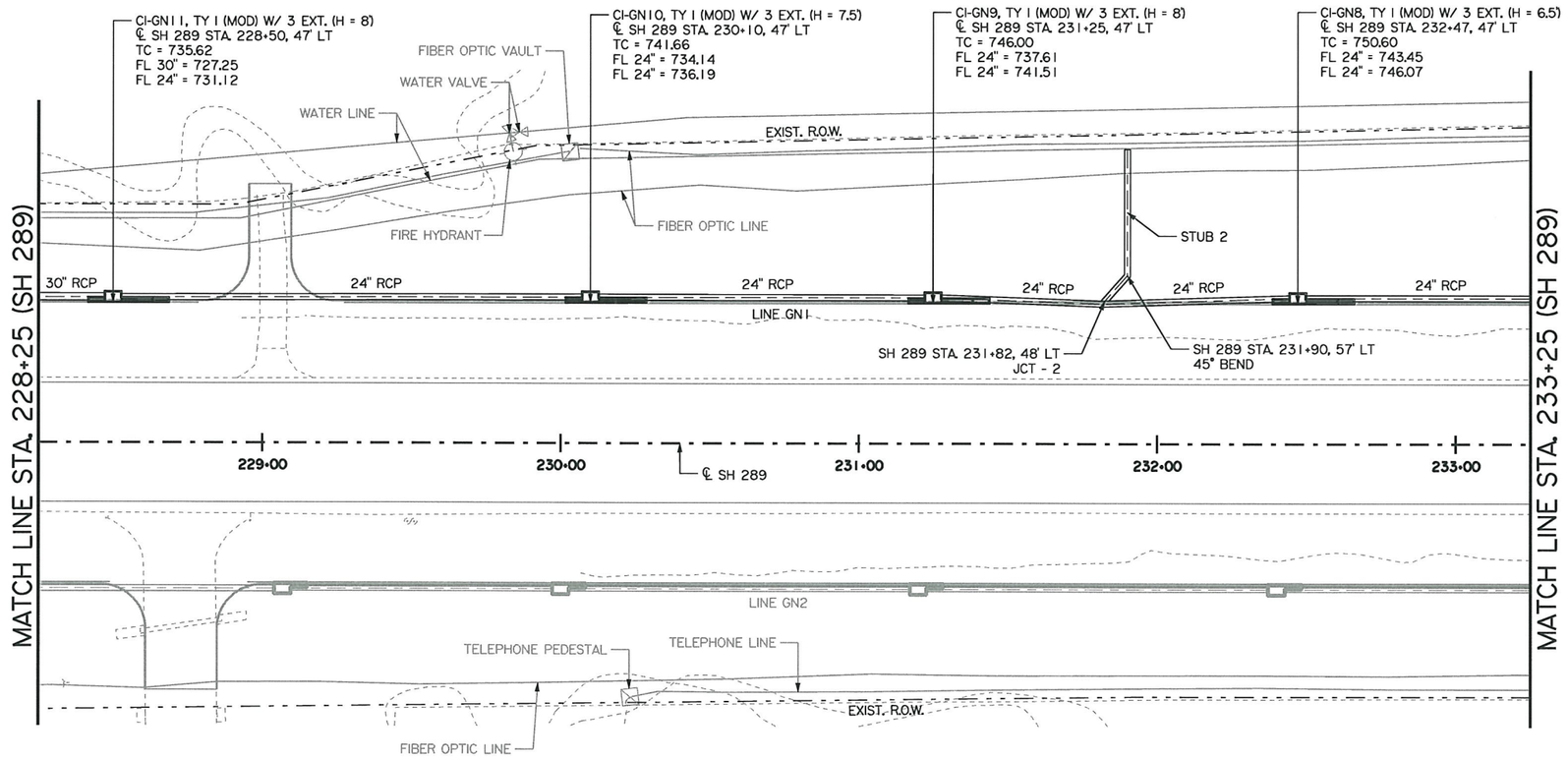

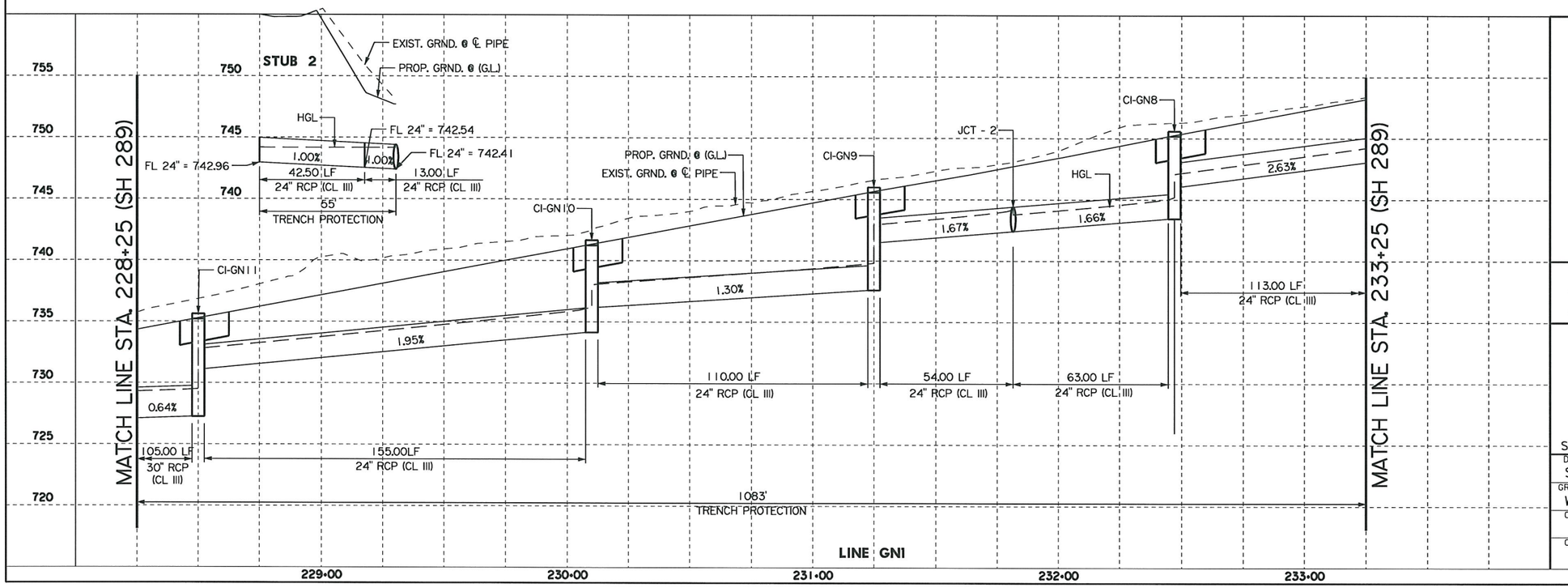

STATE OF TEXAS
HASSAN SAM MOGHADASSI
84231
LICENSED
PROFESSIONAL ENGINEER

H. Moghadassi , P.E. 07,12,11
Signature of Registrant & Date

Texas Department of Transportation
© 2011

SH 289
DRAINAGE PLAN/PROFILE
LINE GN1

SCALE: 1"=50' SHEET 2 OF 14

DESIGN	FED. RD. DIV. NO.	STATE PROJECT NO.		HIGHWAY NO.
SHM	6	SEE TITLE SHEET		SH 289
GRAPHICS	STATE	DISTRICT	COUNTY	SHEET NO.
WAV	TEXAS	18	COLLIN	239
CHECK	CONTROL	SECTION	JOB	
CHECK	0091	03	021	

P-201107-01

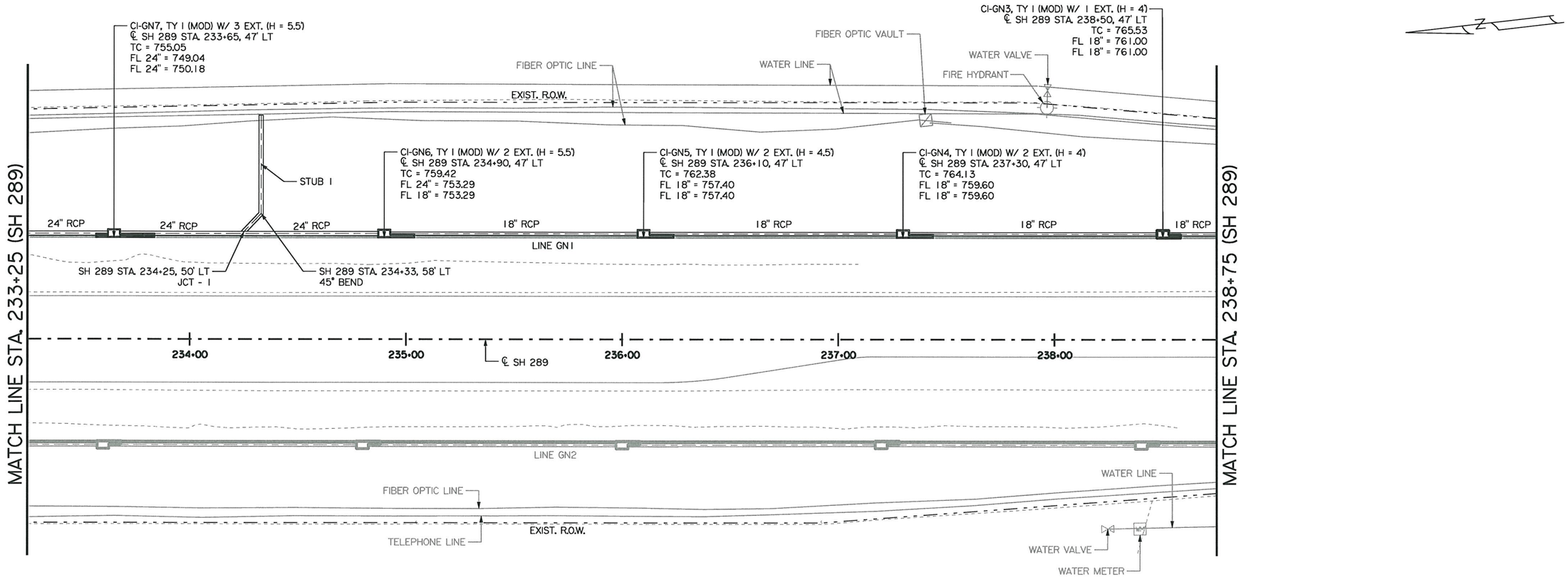

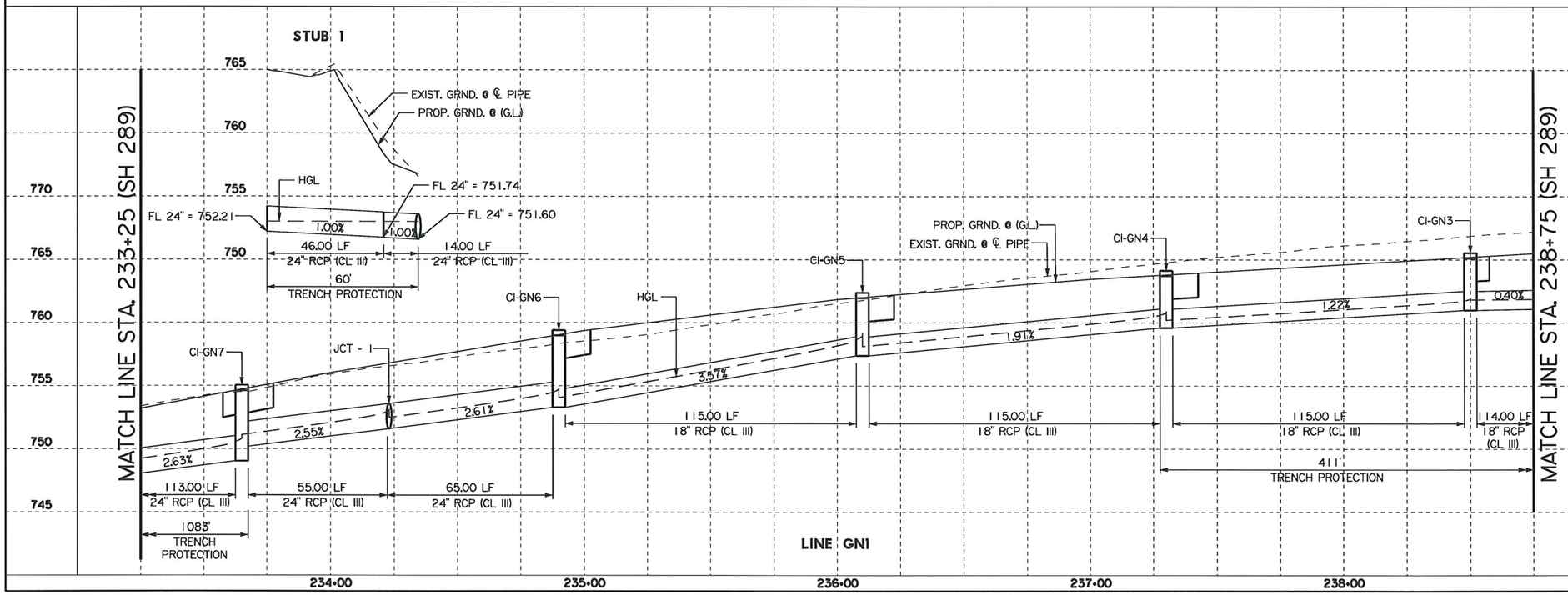

STATE OF TEXAS
HASSAN SAM MOGHADASSI
84231
LICENSED PROFESSIONAL ENGINEER

H. Moghadassi, P.E. 07/12/11
Signature of Registrant & Date

Texas Department of Transportation
© 2011

SH 289
DRAINAGE PLAN/PROFILE
LINE GN1

SCALE: 1"=50' SHEET 3 OF 14

DESIGN	FED. RD. DIV. NO.	STATE PROJECT NO.		HIGHWAY NO.
SHM	6	SEE TITLE SHEET		SH 289
GRAPHICS	STATE	DISTRICT	COUNTY	SHEET NO.
WAV	TEXAS	18	COLLIN	
CHECK	CONTROL	SECTION	JOB	240
CHECK	0091	03	021	

P-201107-01

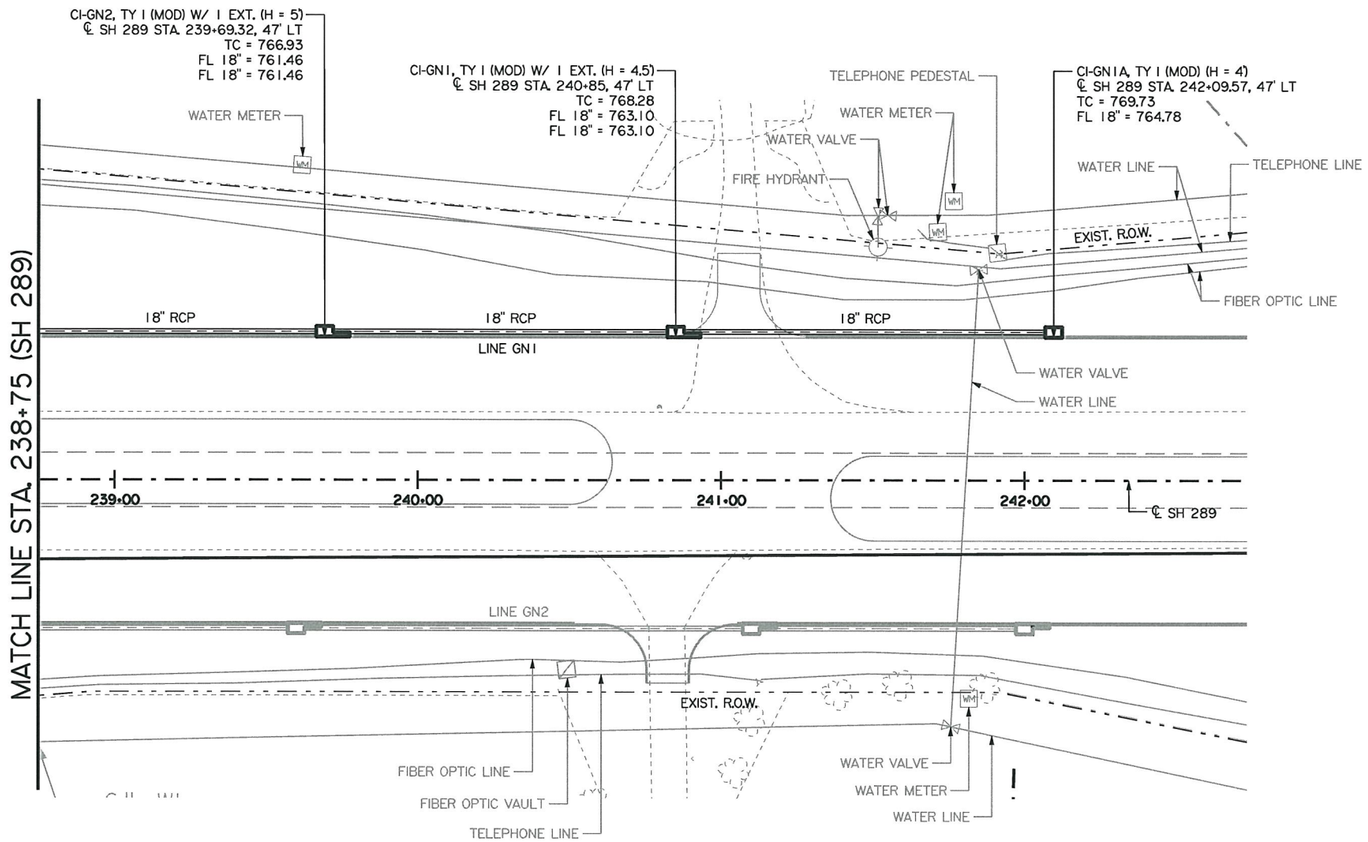

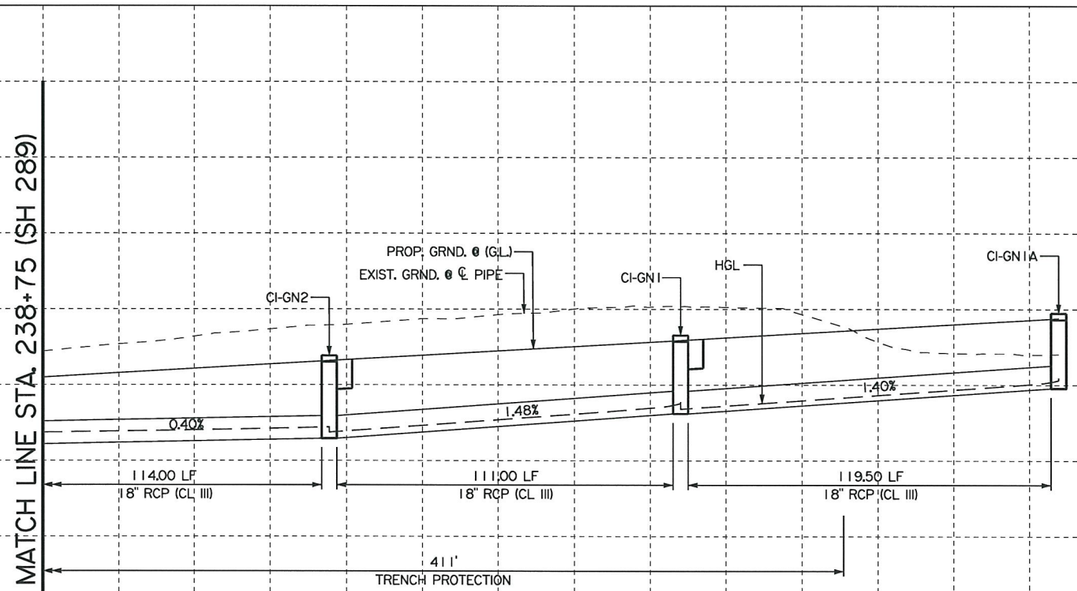

STATE OF TEXAS
HASSAN SAM MOGHADASSI
84231
LICENSED
PROFESSIONAL ENGINEER

H. Moghadassi, P.E. 07/12/11
Signature of Registrant & Date

Texas Department of Transportation
© 2011

SH 289
DRAINAGE PLAN/PROFILE
LINE GN1

SCALE: 1"=50' SHEET 4 OF 14

DESIGN	FED. RD. DIV. NO.	STATE PROJECT NO.		HIGHWAY NO.
SHM	6	SEE TITLE SHEET		SH 289
GRAPHICS WAV	STATE	DISTRICT	COUNTY	SHEET NO.
CHECK	TEXAS	18	COLLIN	241
CHECK	CONTROL	SECTION	JOB	
	0091	03	021	

P-201107-01

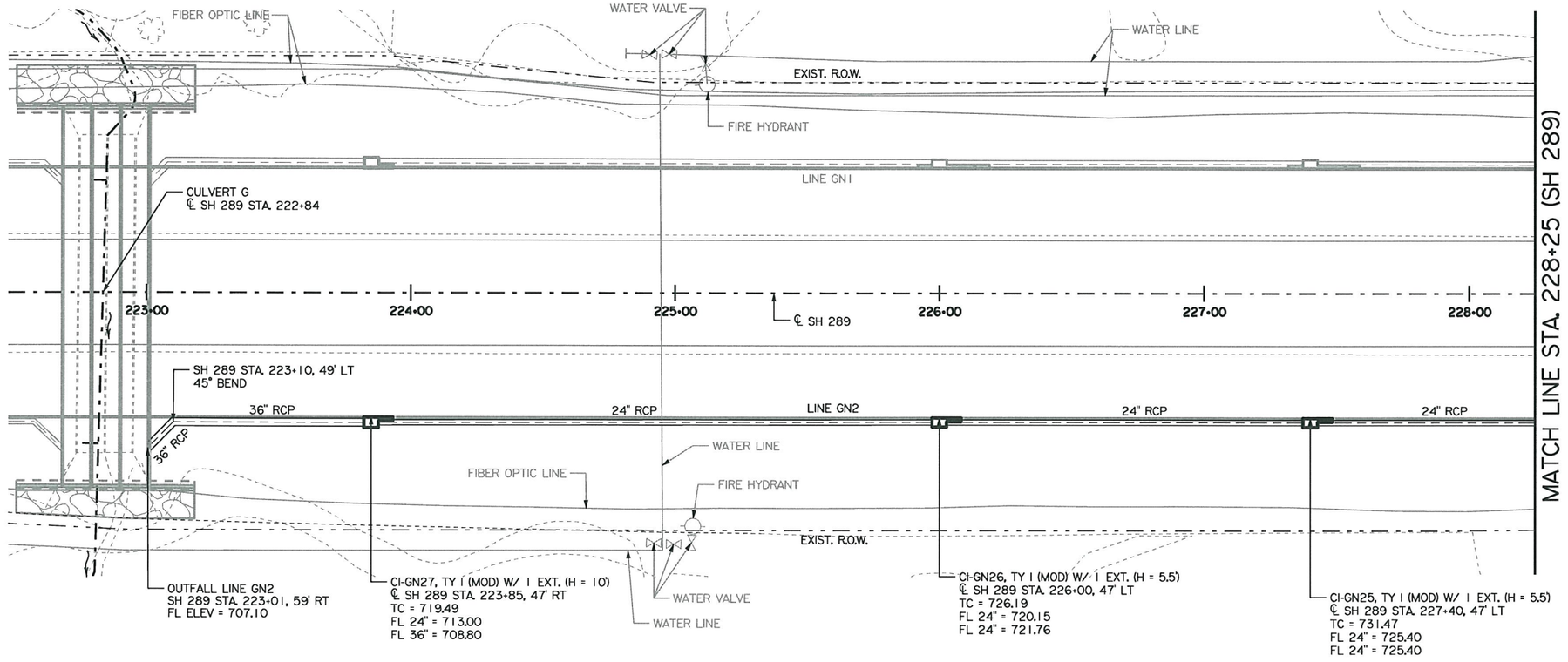

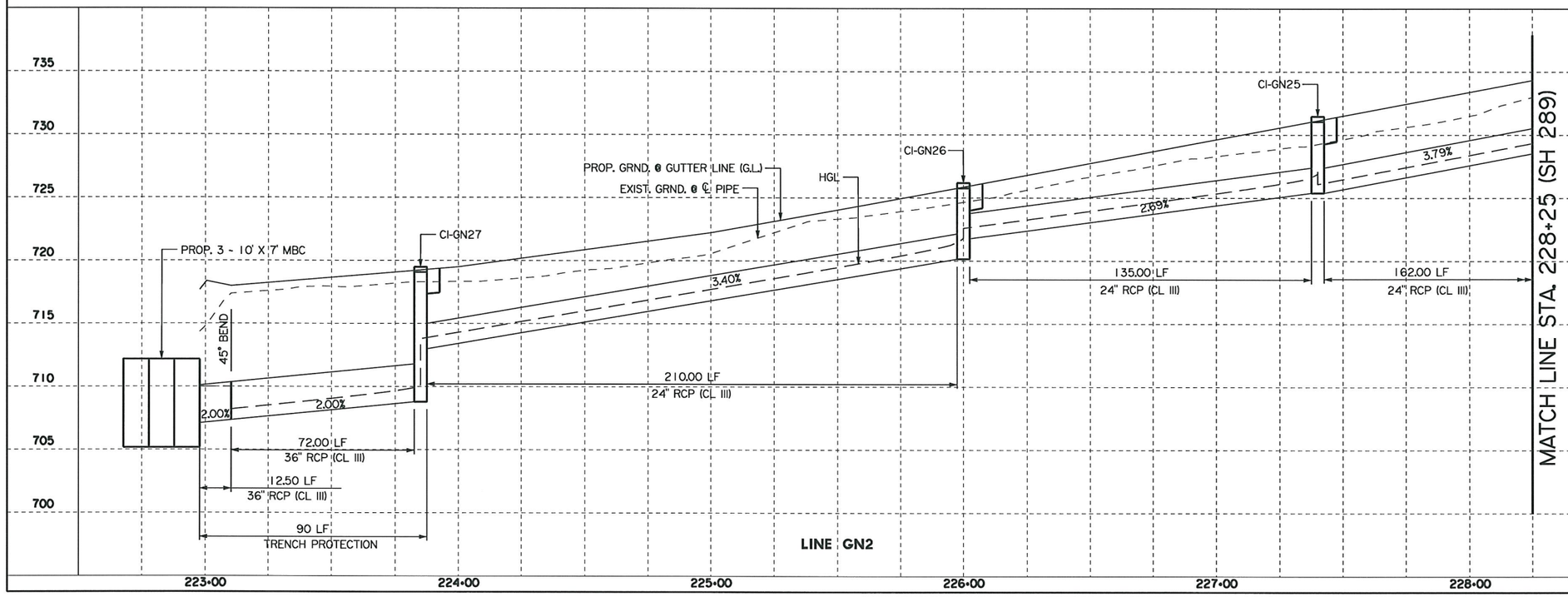

STATE OF TEXAS
HASSAN SAM MOGHADASSI
84231
LICENSED PROFESSIONAL ENGINEER

H. Moghadassi, P.E. 07/12/11
Signature of Registrant & Date

Texas Department of Transportation
© 2011

SH 289
DRAINAGE PLAN/PROFILE
LINE GN2

SCALE: 1"=50' SHEET 5 OF 14

DESIGN	FED. RD. DIV. NO.	STATE PROJECT NO.		HIGHWAY NO.
SHM	6	SEE TITLE SHEET		SH 289
GRAPHICS	STATE	DISTRICT	COUNTY	SHEET NO.
WAV	TEXAS	18	COLLIN	242
CHECK	CONTROL	SECTION	JOB	
CHECK	0091	03	021	

P-201107-01

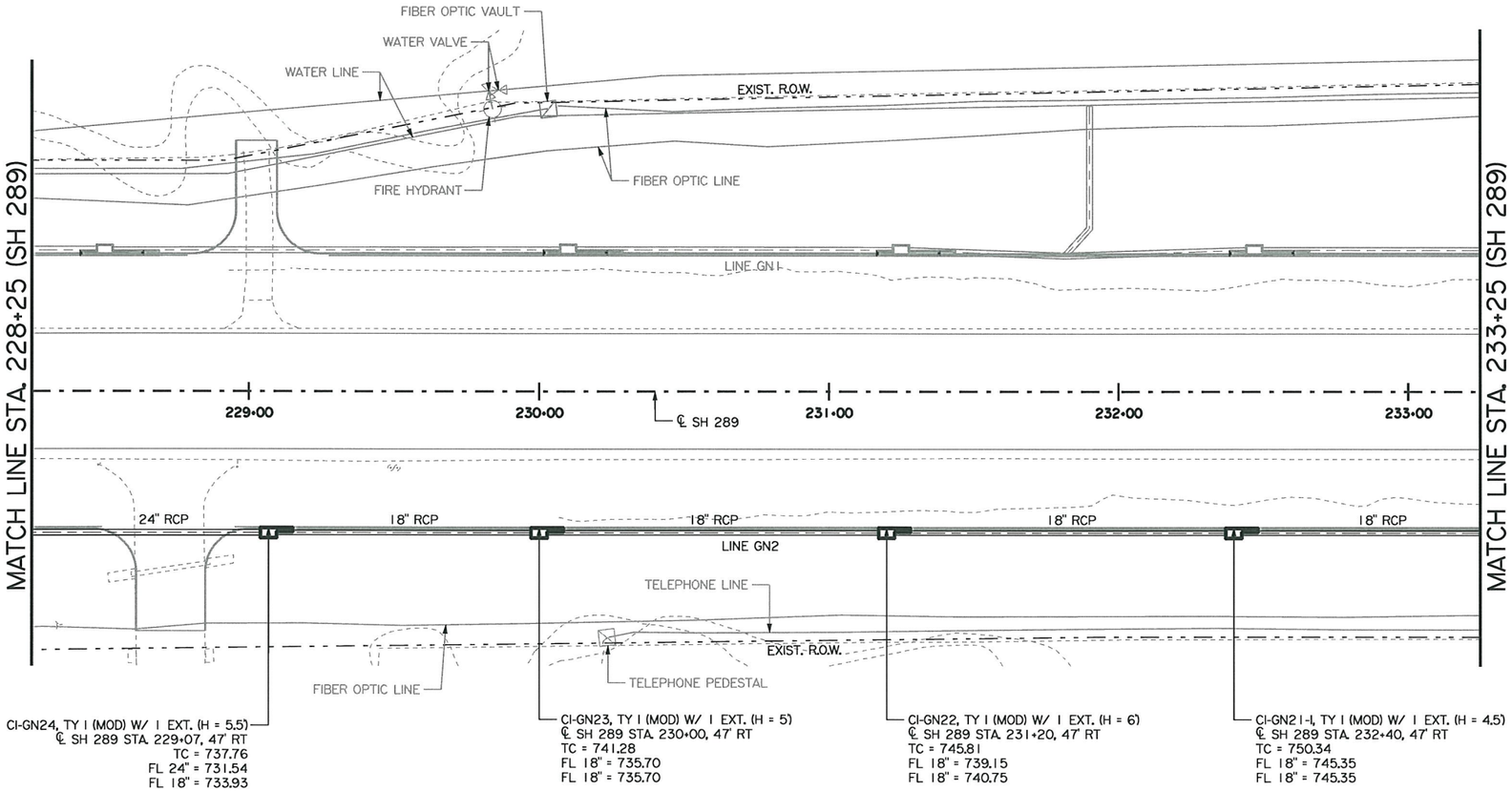

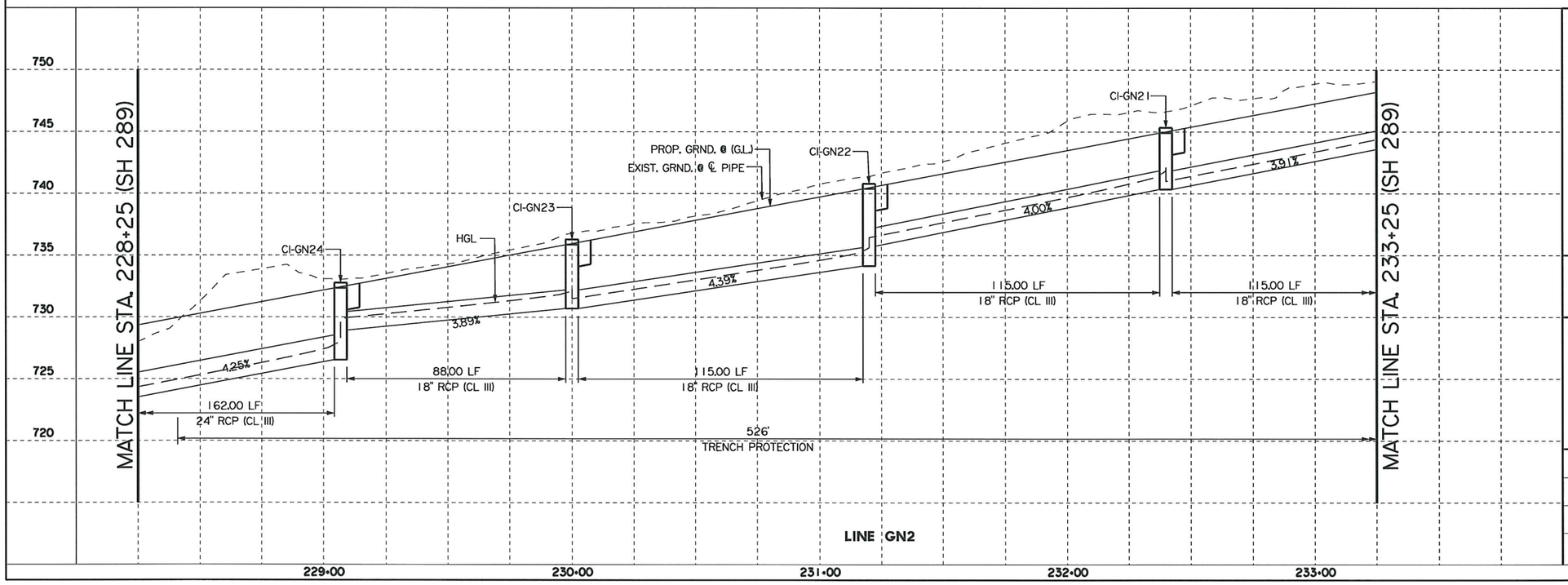

STATE OF TEXAS
HASSAN SAM MOGHADASSI
84231
LICENSED
PROFESSIONAL ENGINEER

H. Moghadassi, P.E. 07/12/11
Signature of Registrant & Date

Texas Department of Transportation
© 2011

SH 289
DRAINAGE PLAN/PROFILE
LINE GN2

SCALE: 1"=50' SHEET 6 OF 14

DESIGN	FED. RD. DIV. NO.	STATE PROJECT NO.		HIGHWAY NO.
SHM	6	SEE TITLE SHEET		SH 289
GRAPHICS WAV	STATE	DISTRICT	COUNTY	SHEET NO.
CHECK	TEXAS	18	COLLIN	243
CHECK	CONTROL	SECTION	JOB	
	0091	03	021	

P-201107-01

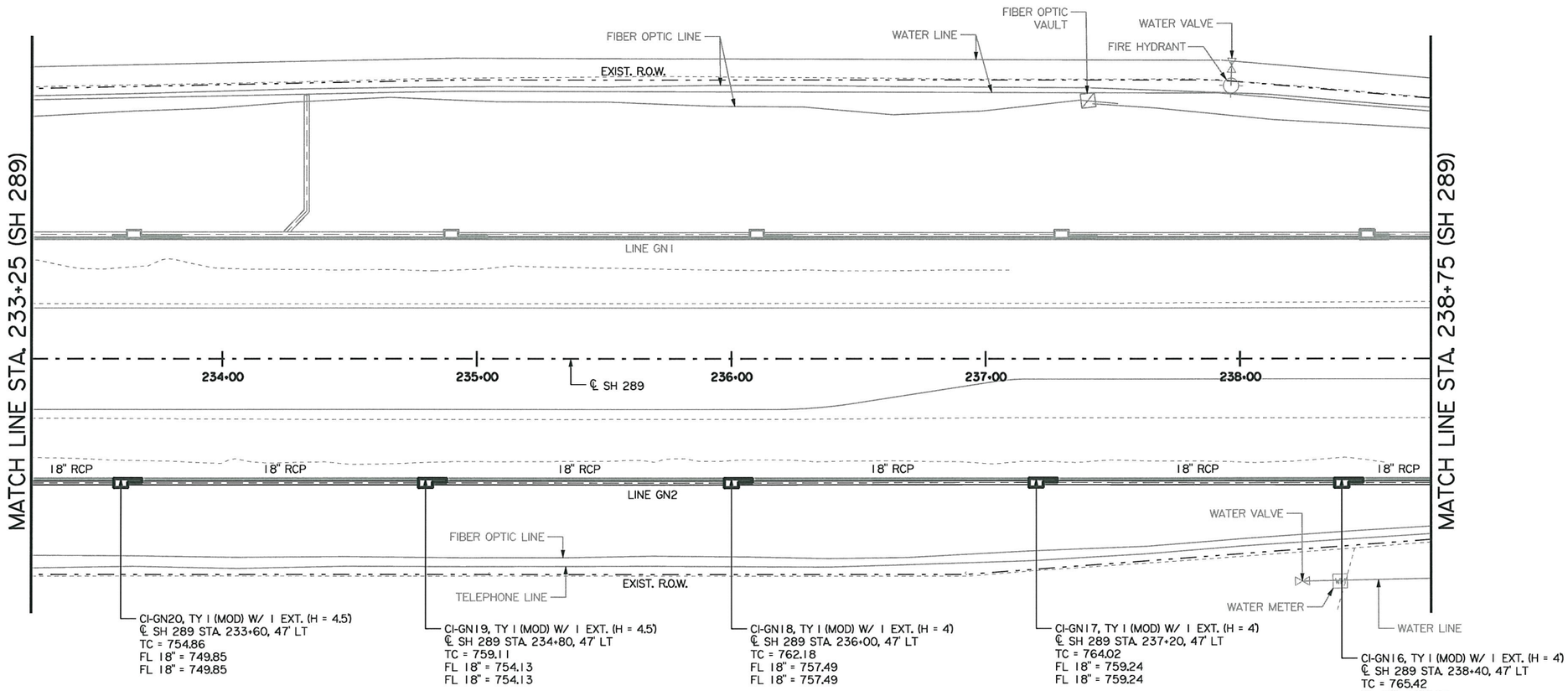

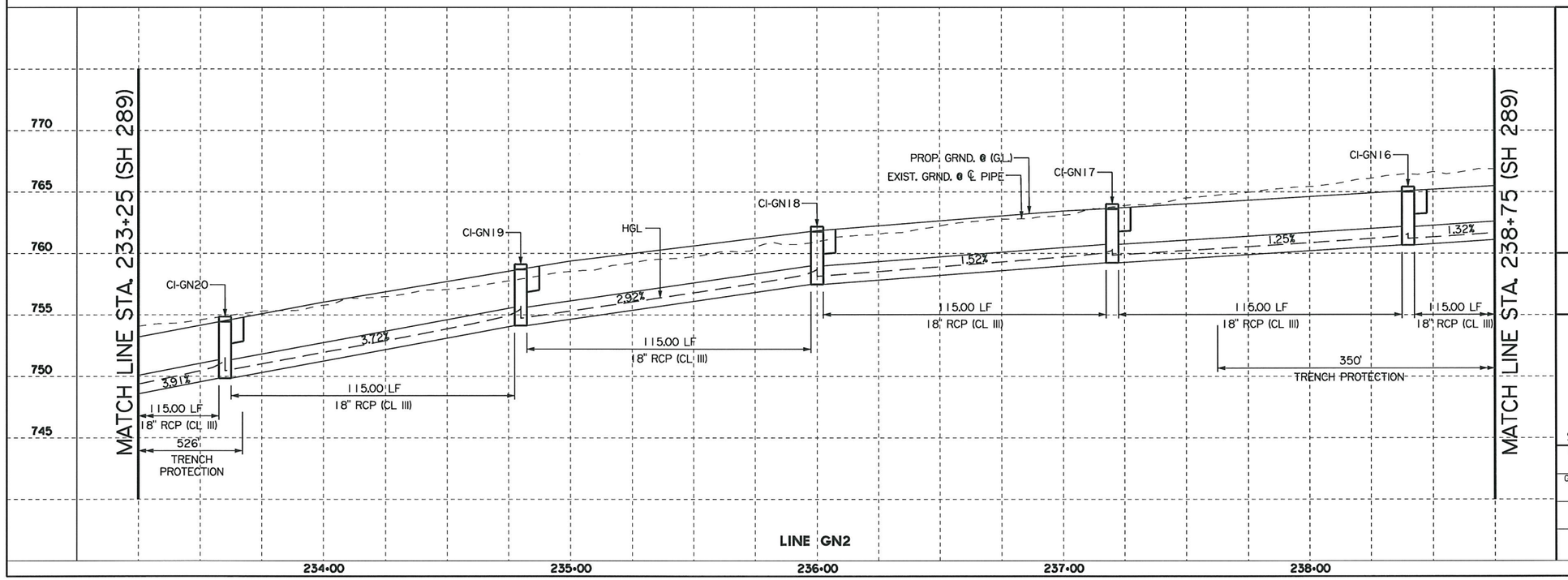

HASSAN SAM MOGHADASSI
84231
LICENSED PROFESSIONAL ENGINEER
STATE OF TEXAS

H. Moghadassi, P.E. 07/12/11
Signature of Registrant & Date

Texas Department of Transportation
© 2011

SH 289
DRAINAGE PLAN/PROFILE
LINE GN2

SCALE: 1"=50'

SHEET 7 OF 14

DESIGN	FED. RD. DIV. NO.	STATE PROJECT NO.		HIGHWAY NO.
SHM	6	SEE TITLE SHEET		SH 289
GRAPHICS: WAV	STATE	DISTRICT	COUNTY	SHEET NO.
CHECK	TEXAS	18	COLLIN	244
CHECK	CONTROL	SECTION	JOB	
	0091	03	021	

P-201107-01

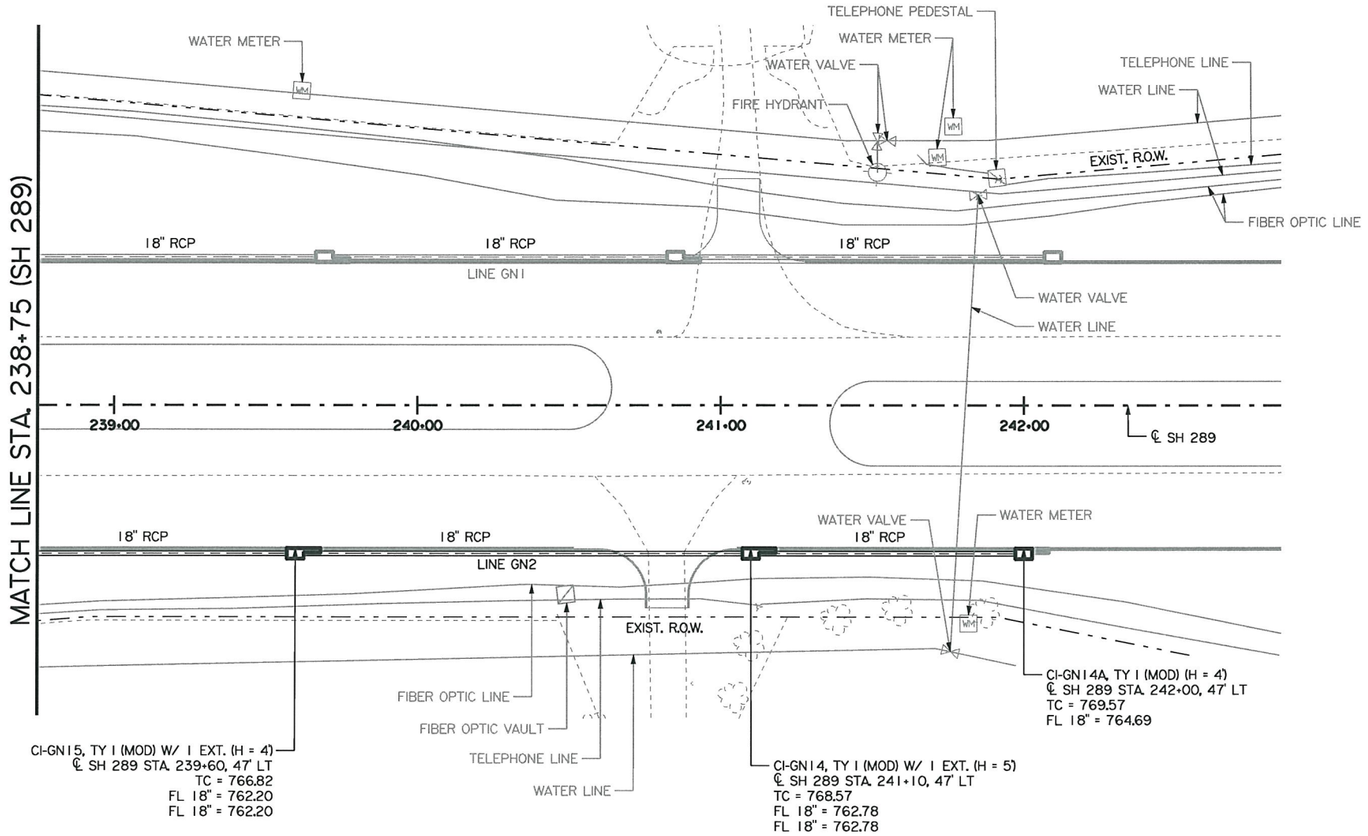

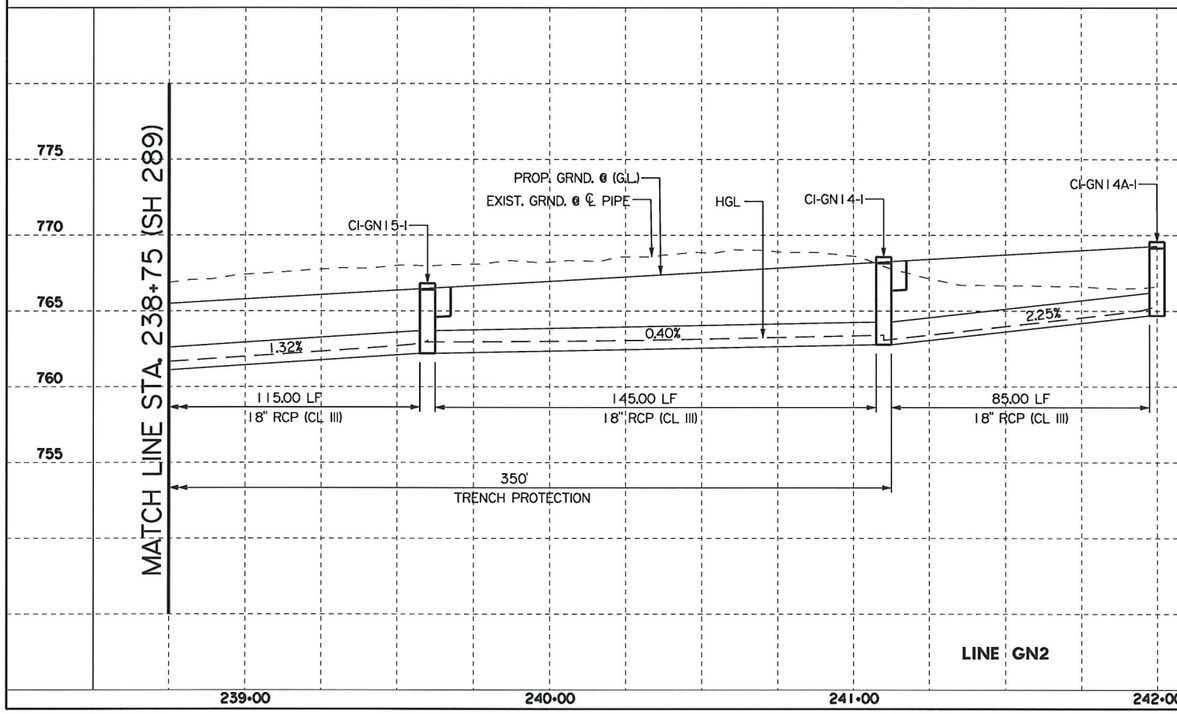

STATE OF TEXAS
HASSAN SAM MOGHADASSI
84231
LICENSED
PROFESSIONAL ENGINEER

H. Moghadassi, P.E. 07/12/11
Signature of Registrant & Date

Texas Department of Transportation
© 2011

SH 289
DRAINAGE PLAN/PROFILE
LINE GN2

SCALE: 1"=50'

SHEET 8 OF 14

DESIGN	FED. RD. DIV. NO.	STATE PROJECT NO.		HIGHWAY NO.
SHM	6	SEE TITLE SHEET		SH 289
GRAPHICS WAV	STATE	DISTRICT	COUNTY	SHEET NO.
CHECK	TEXAS	18	COLLIN	245
CHECK	CONTROL	SECTION	JOB	
	0091	03	021	

P-201107-01

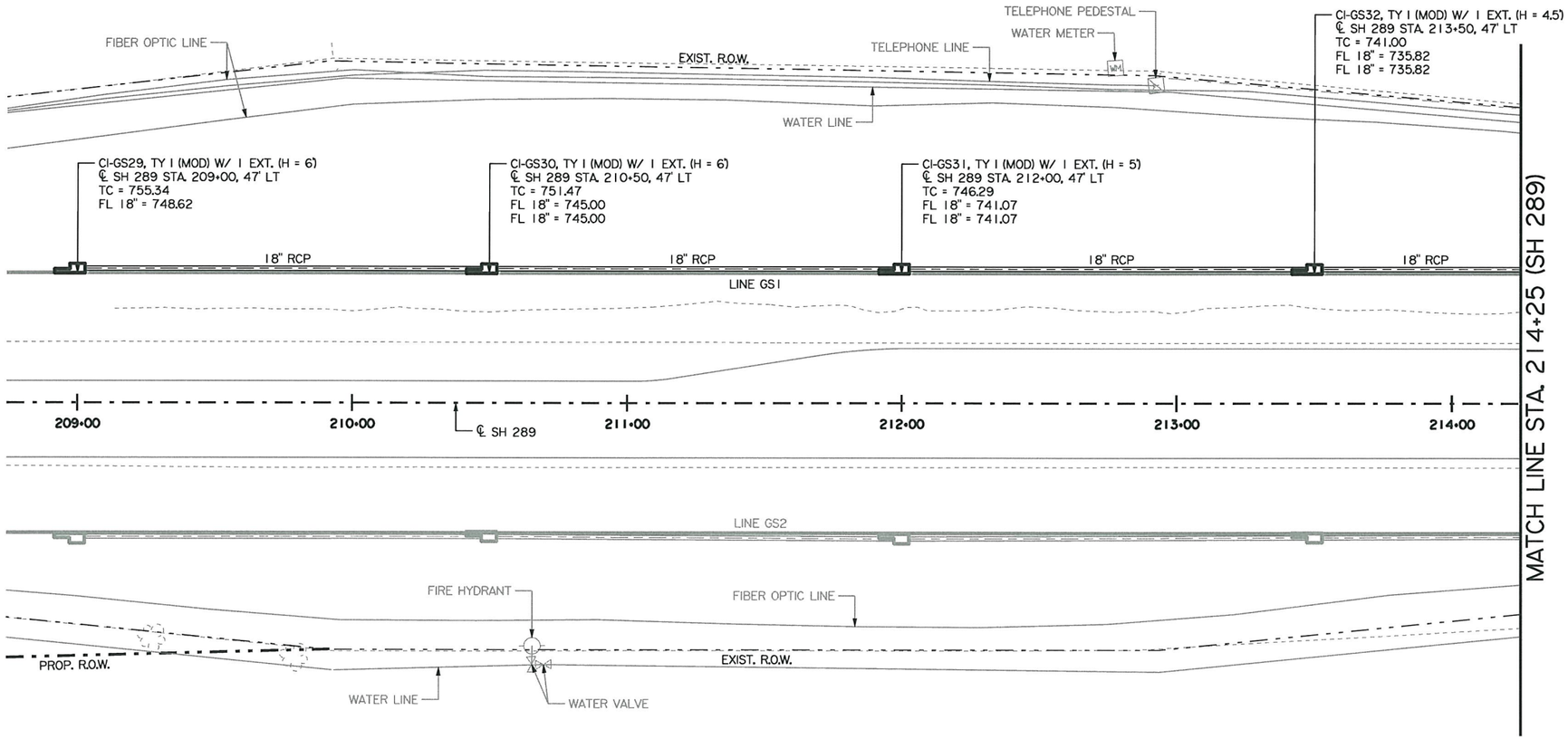

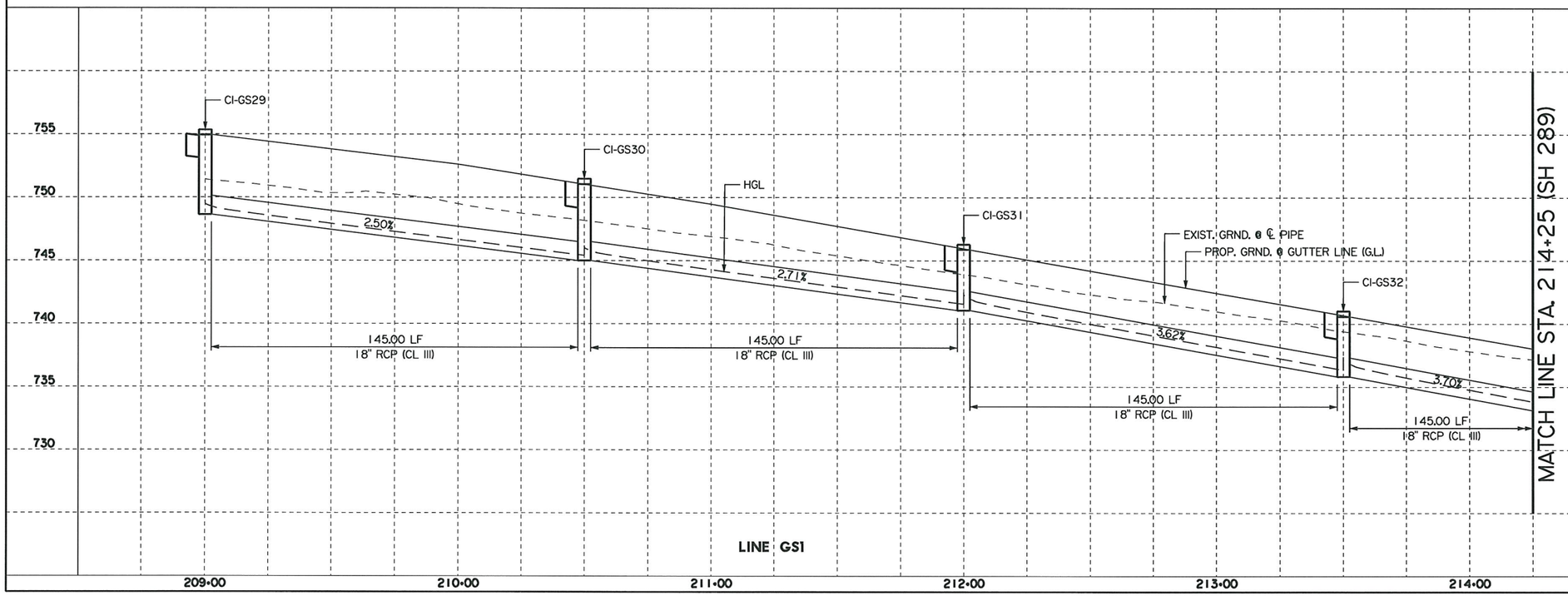

STATE OF TEXAS
HASSAN SAM MOGHADASSI
84231
LICENSED PROFESSIONAL ENGINEER

H. Moghadassi, P.E. 07/12/11
Signature of Registrant & Date

Texas Department of Transportation
© 2011

SH 289
DRAINAGE PLAN/PROFILE
LINE GS1

SCALE: 1"=50' SHEET 9 OF 14

DESIGN	FED. RD. DIV. NO.	STATE PROJECT NO.		HIGHWAY NO.
SHM	6	SEE TITLE SHEET		SH 289
GRAPHICS	STATE	DISTRICT	COUNTY	SHEET NO.
WAV	TEXAS	18	COLLIN	
CHECK	CONTROL	SECTION	JOB	246
CHECK	0091	03	021	

P-201107-01

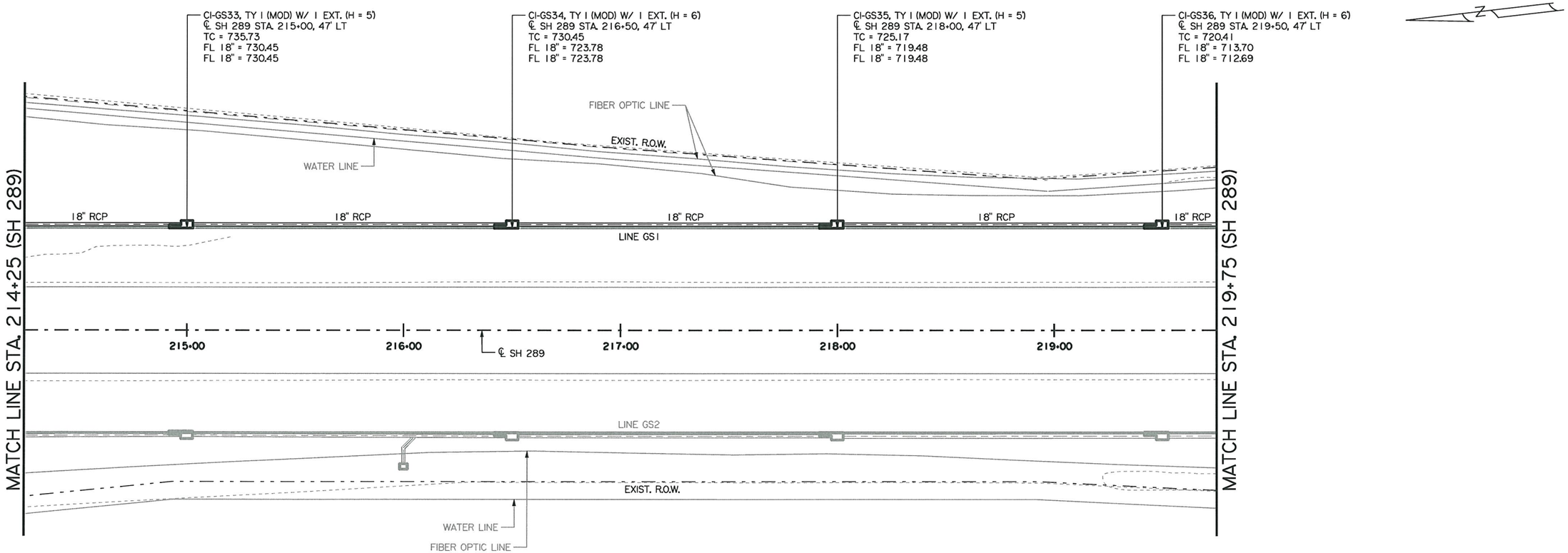

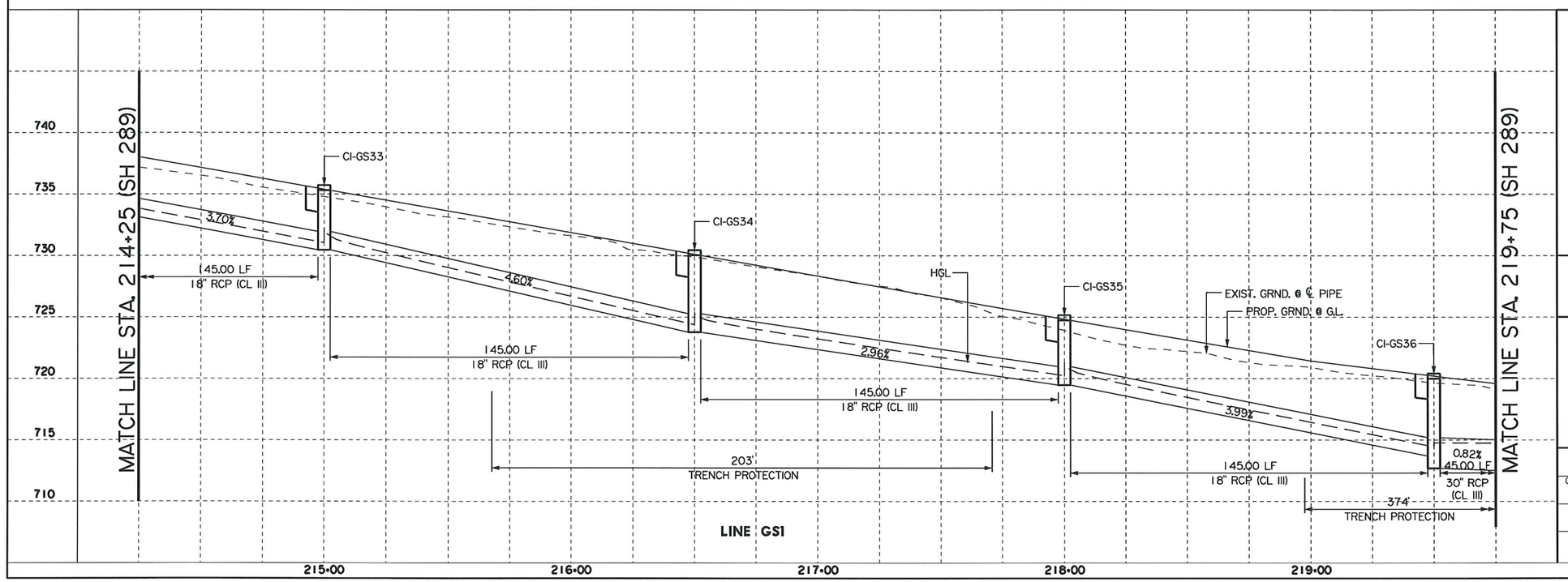

LINE GS1

HASSAN SAM MOGHADASSI
84231
LICENSED
PROFESSIONAL ENGINEER
STATE OF TEXAS

H. Moghadassi, P.E. & 07/12/11
Signature of Registrant Date

Texas Department of Transportation
© 2011

SH 289
DRAINAGE PLAN/PROFILE
LINE GS1

SCALE: 1"=50' SHEET 10 OF 14

DESIGN	FED. RD. DIV. NO.	STATE PROJECT NO.		HIGHWAY NO.
SHM	6	SEE TITLE SHEET		SH 289
GRAPHICS	STATE	DISTRICT	COUNTY	SHEET NO.
WAV	TEXAS	18	COLLIN	247
CHECK	CONTROL	SECTION	JOB	
CHECK	0091	03	021	

P-201107-01

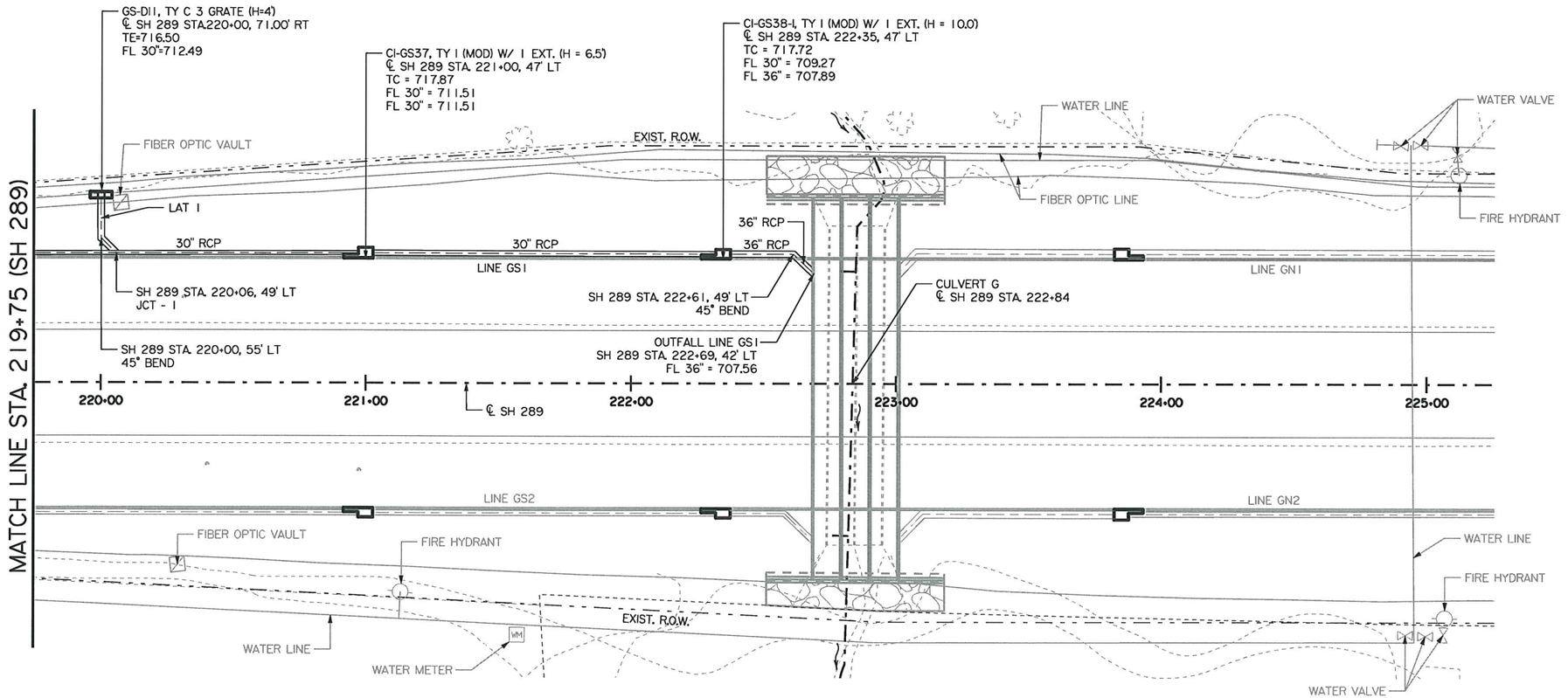

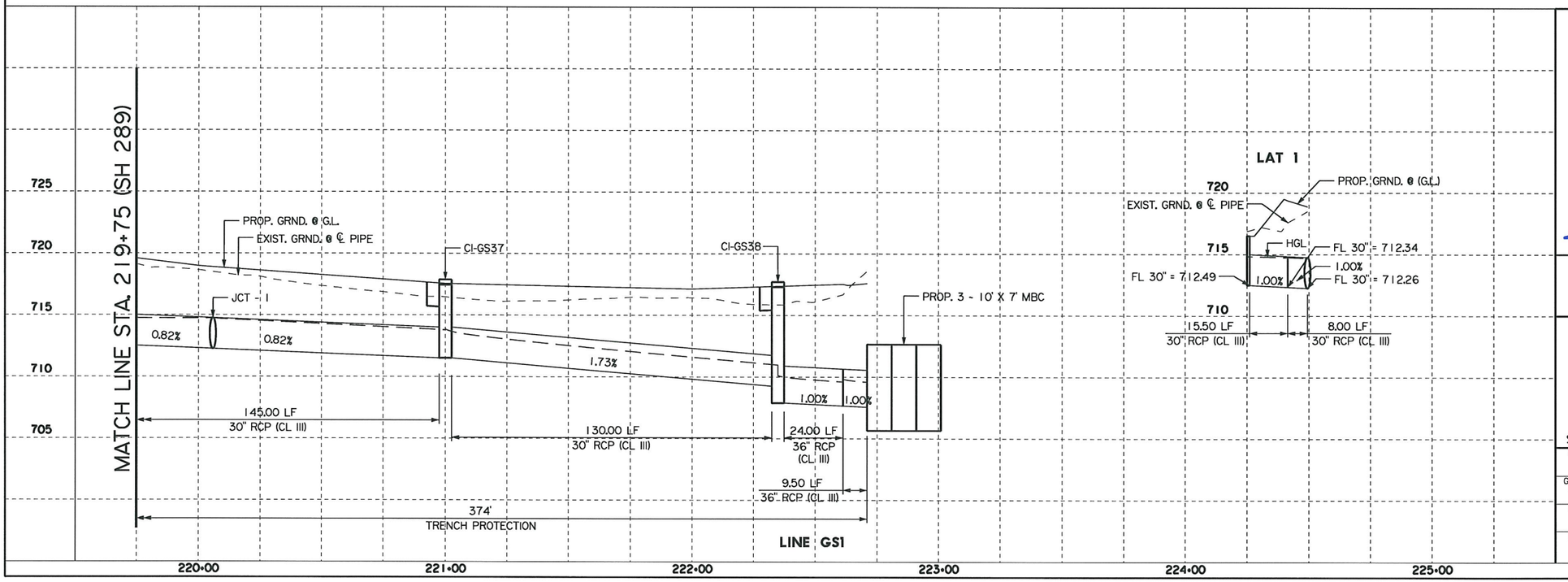

HASSAN SAM MOGHADASSI
84231
LICENSED PROFESSIONAL ENGINEER
STATE OF TEXAS

H. Moghadassi, P.E. 07/12/11
Signature of Registrant & Date

Texas Department of Transportation
© 2011

SH 289
DRAINAGE PLAN/PROFILE
LINE GS1

SCALE: 1"=50' SHEET 11 OF 14

DESIGN	FED. RD. DIV. NO.	STATE PROJECT NO.		HIGHWAY NO.
SHM	6	SEE TITLE SHEET		SH 289
GRAPHICS	STATE	DISTRICT	COUNTY	SHEET NO.
WAV	TEXAS	18	COLLIN	
CHECK	CONTROL	SECTION	JOB	248
CHECK	0091	03	021	

P-201107-01

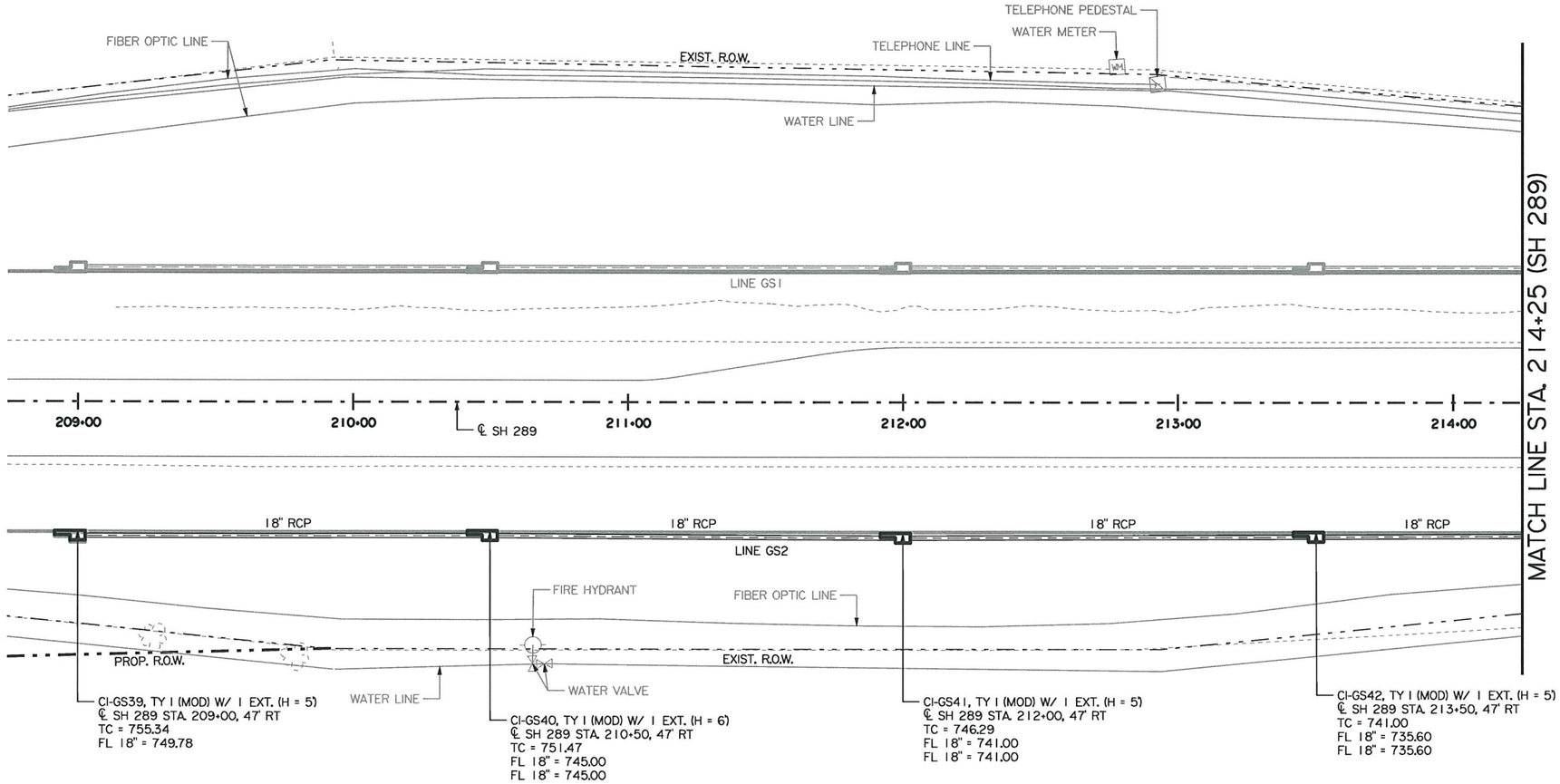

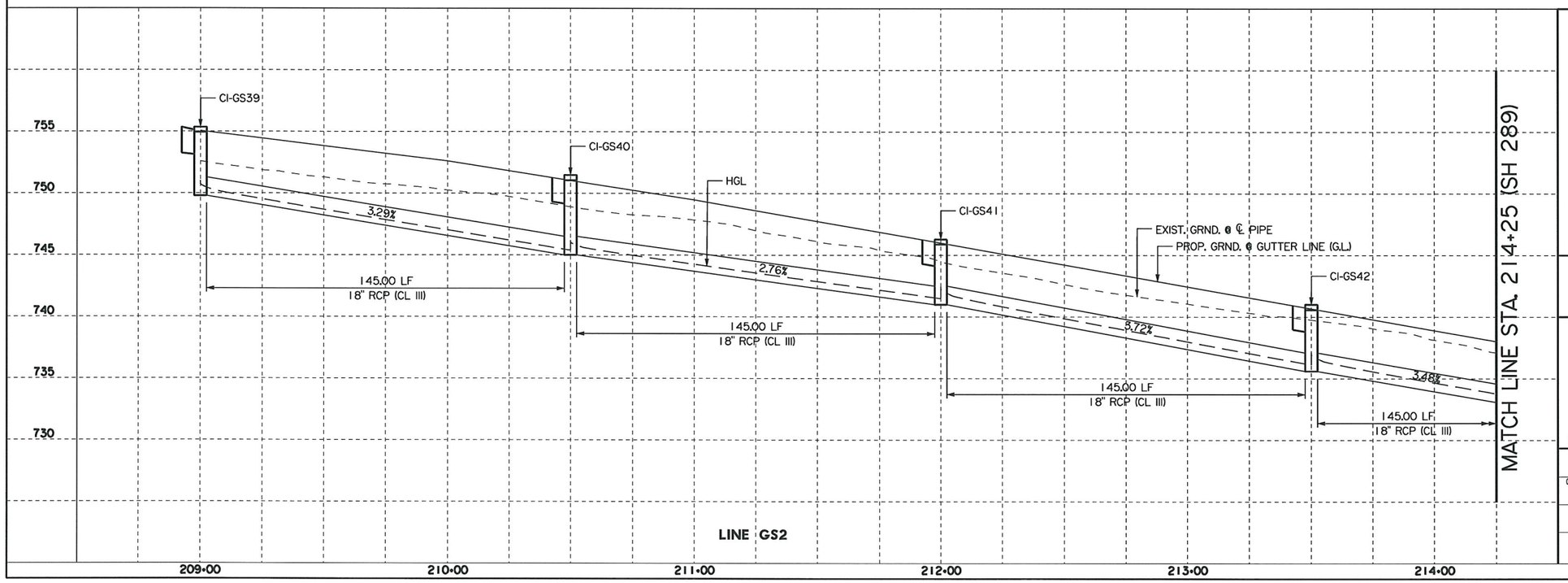

STATE OF TEXAS
HASSAN SAM MOGHADASSI
84231
LICENSED PROFESSIONAL ENGINEER

H. Moghadassi P.E. 07/12/11
Signature of Registrant & Date

Texas Department of Transportation
© 2011

SH 289
DRAINAGE PLAN/PROFILE
LINE GS2

SCALE: 1"=50' SHEET 12 OF 14

DESIGN	FED. RD. DIV. NO.	STATE PROJECT NO.		HIGHWAY NO.
SHM	6	SEE TITLE SHEET		SH 289
GRAPHICS WAV	STATE	DISTRICT	COUNTY	SHEET NO.
CHECK	TEXAS	18	COLLIN	249
CHECK	CONTROL	SECTION	JOB	
	0091	03	021	

P-201107-01

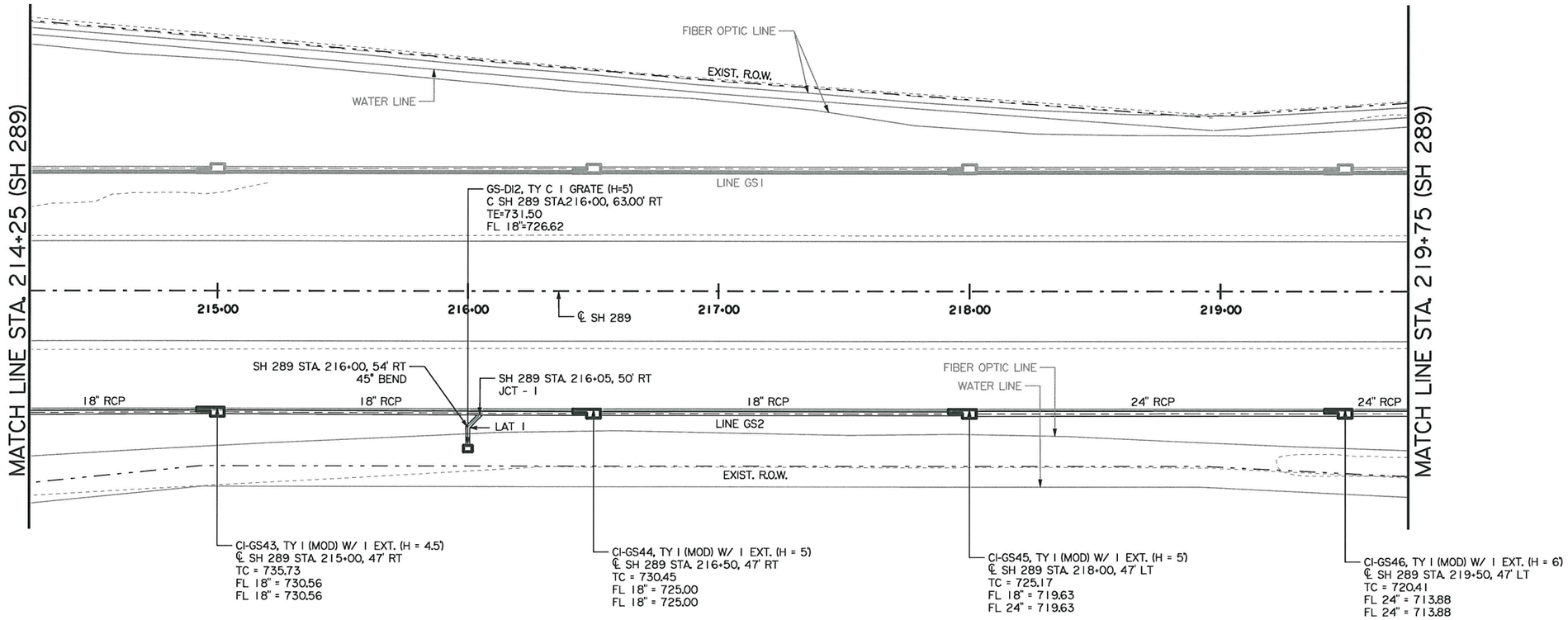

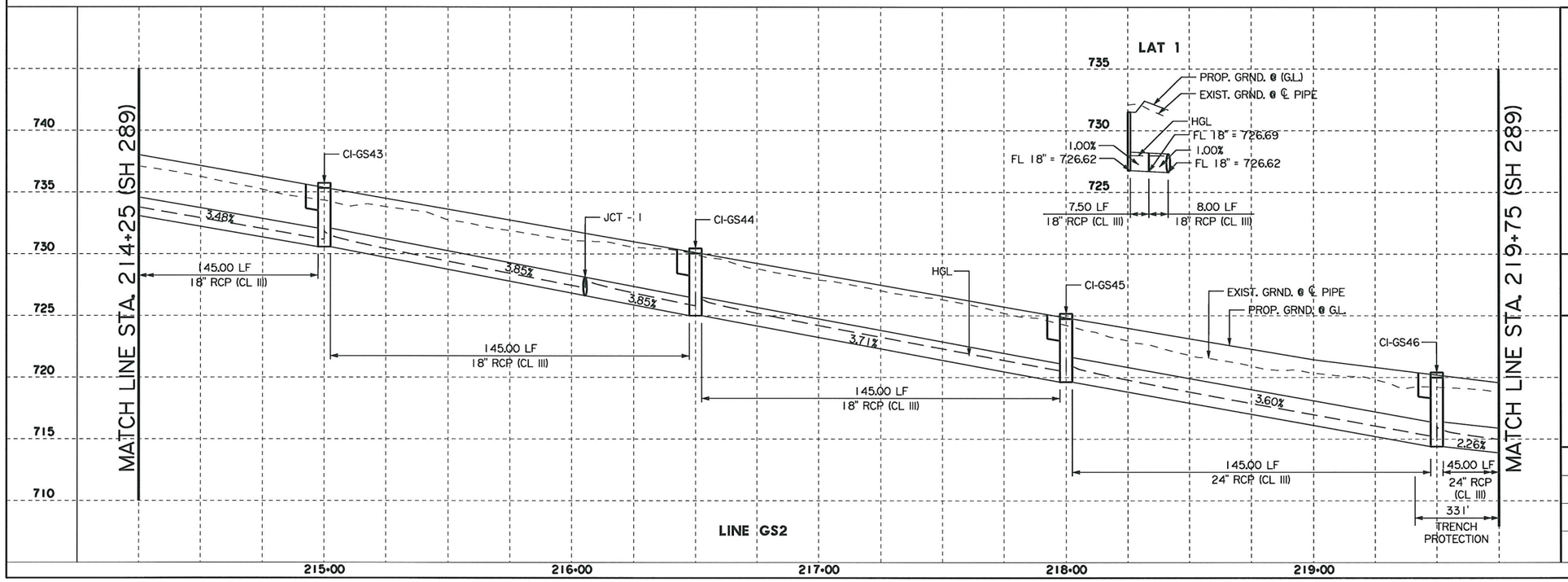

HASSAN SAM MOGHADASSI
84231
LICENSED PROFESSIONAL ENGINEER
STATE OF TEXAS

H. Moghadassi, P.E. 07/12/11
Signature of Registrant & Date

Texas Department of Transportation
© 2011

SH 289
DRAINAGE PLAN/PROFILE
LINE GS2

SCALE: 1"=50' SHEET 13 OF 14

DESIGN	FED. RD. DIV. NO.	STATE PROJECT NO.		HIGHWAY NO.
SHM	6	SEE TITLE SHEET		SH 289
GRAPHICS	STATE	DISTRICT	COUNTY	SHEET NO.
WAV	TEXAS	18	COLLIN	250
CHECK	CONTROL	SECTION	JOB	
CHECK	0091	03	021	

P-201107-01

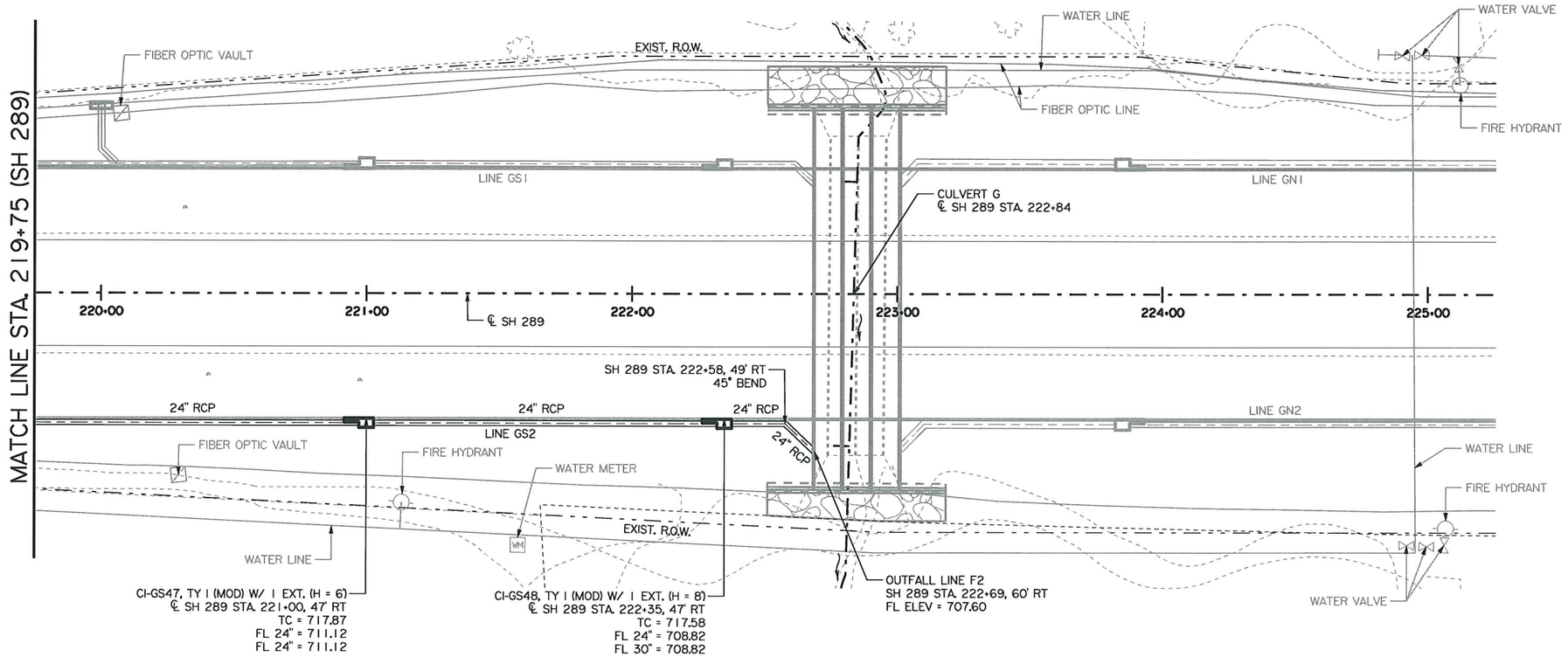

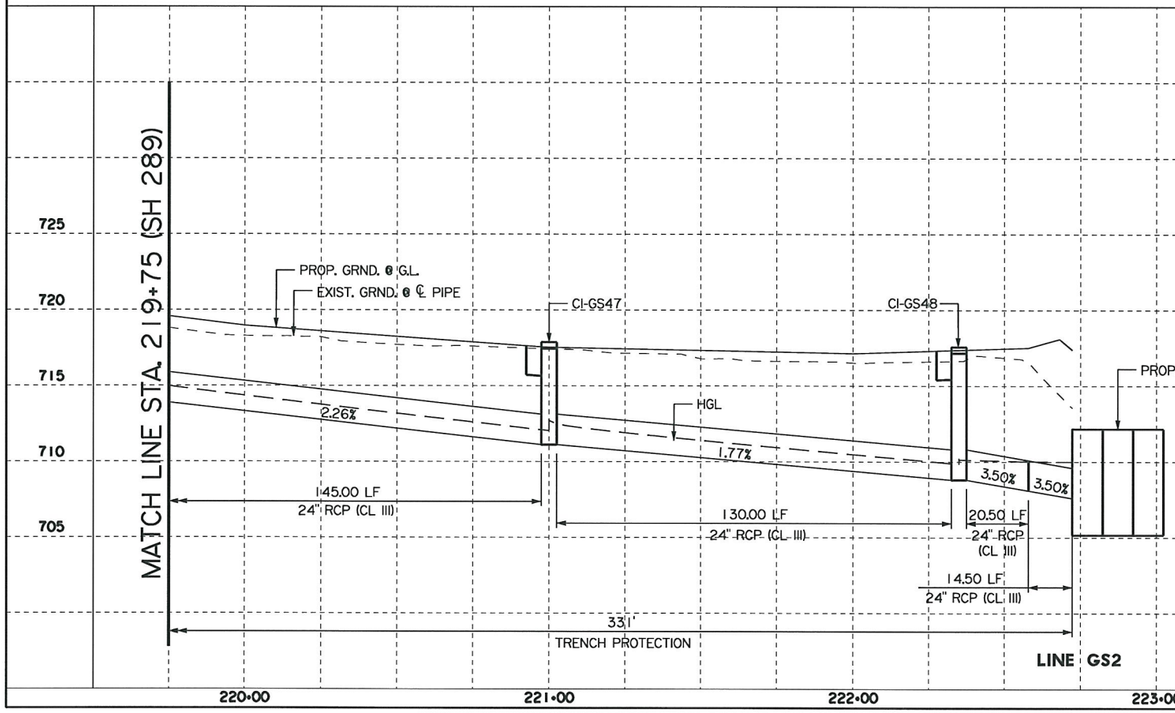

H. Moghadassi, P.E. 07/12/11
Signature of Registrant & Date

Texas Department of Transportation
© 2011

SH 289
DRAINAGE PLAN/PROFILE
LINE GS2

SCALE: 1"=50' SHEET 14 OF 14

DESIGN	FED. RD. DIV. NO.	STATE PROJECT NO.		HIGHWAY NO.
SHM	6	SEE TITLE SHEET		SH 289
GRAPHICS	STATE	DISTRICT	COUNTY	SHEET NO.
WAV	TEXAS	18	COLLIN	
CHECK	CONTROL	SECTION	JOB	251
CHECK	0091	03	021	

P-201107-01

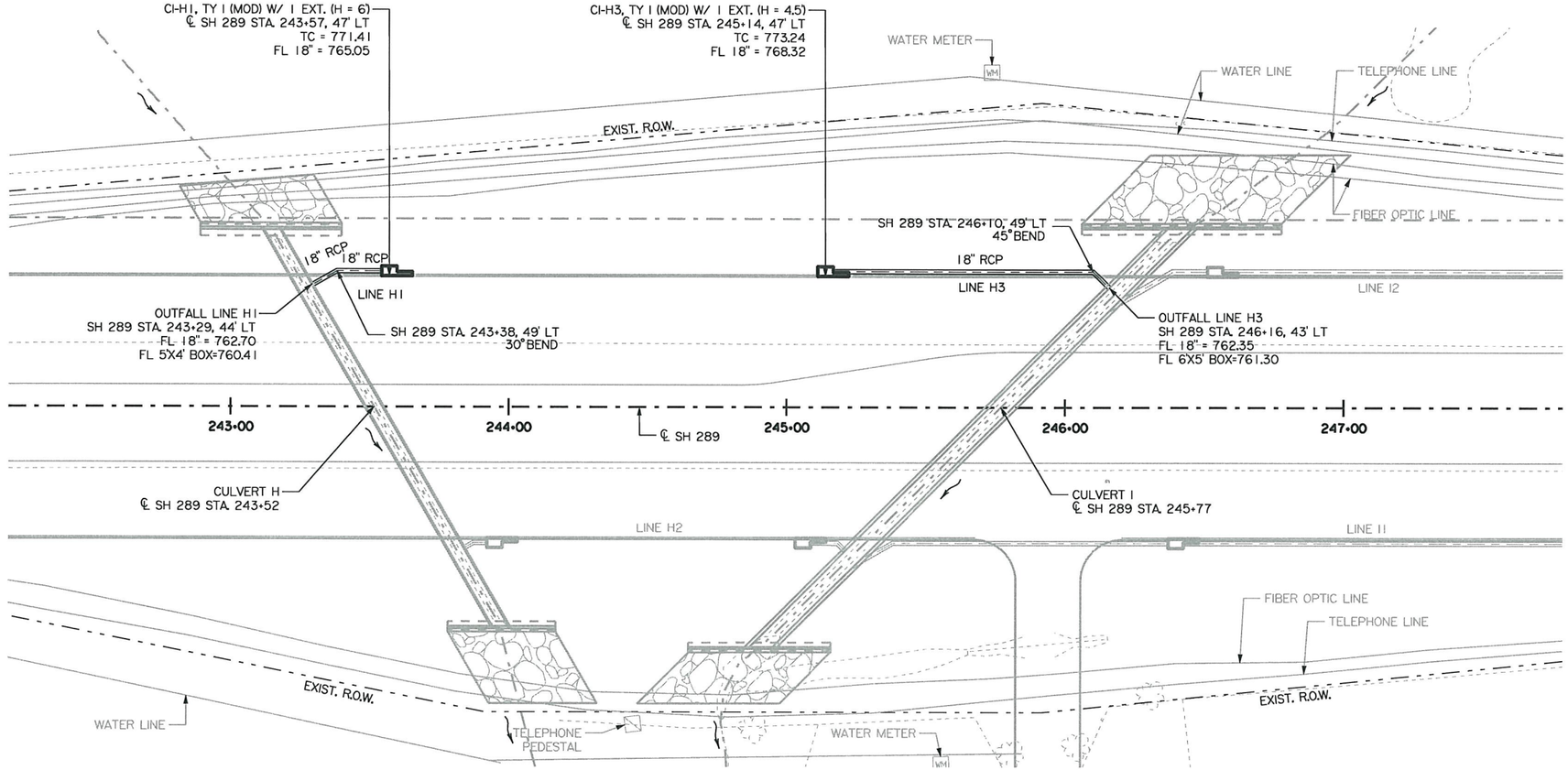

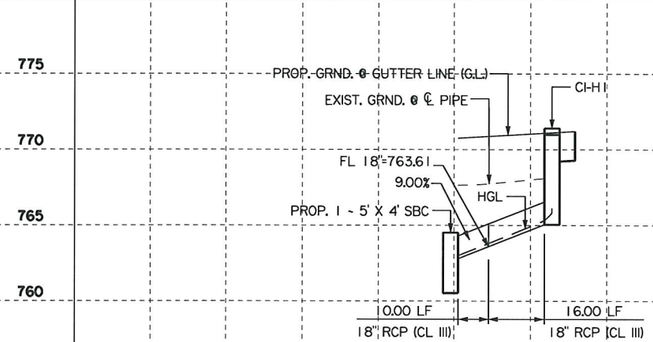

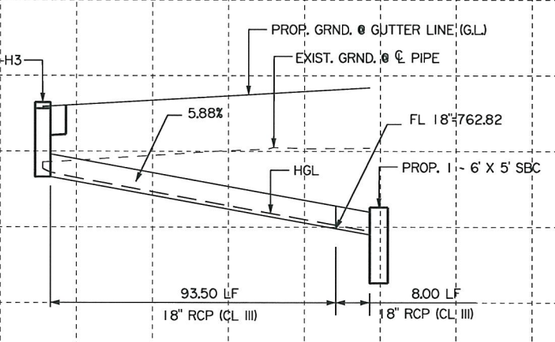

243+00 244+00 245+00 246+00 247+00

STATE OF TEXAS
HASSAN SAM MOGHADASSI
84231
LICENSED
PROFESSIONAL ENGINEER

H. Moghadassi ,P.E. 07/21/11
Signature of Registrant & Date

Texas Department of Transportation
© 2011

SH 289
DRAINAGE PLAN/PROFILE
LINE H1 & H3

SCALE: 1"=50' SHEET 1 OF 2

DESIGN	FED. RD. DIV. NO.	STATE PROJECT NO.		HIGHWAY NO.
SHM	6	SEE TITLE SHEET		SH 289
GRAPHICS WAV	STATE	DISTRICT	COUNTY	SHEET NO.
CHECK	TEXAS	18	COLLIN	252
CHECK	CONTROL	SECTION	JOB	
	0091	03	021	

P-201107-01

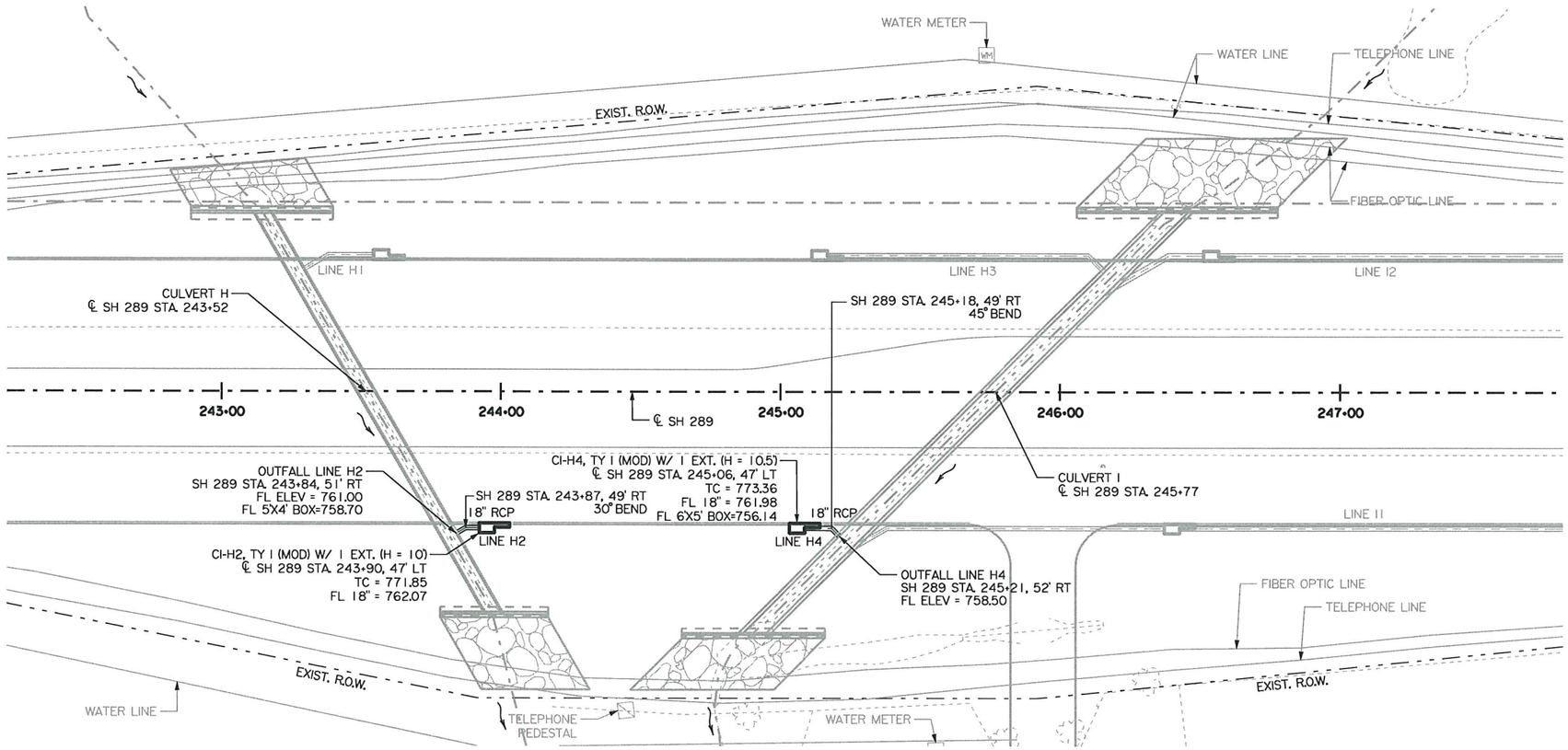

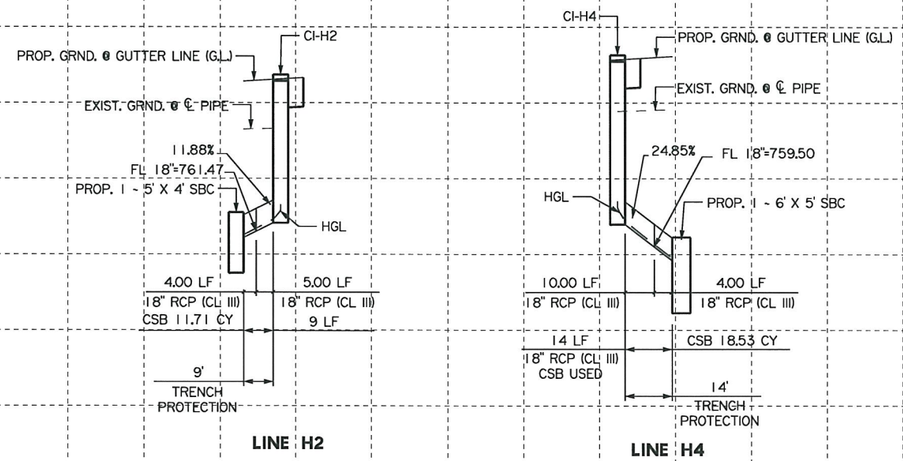

H. Moghadassi, P.E. 07/12/11
Signature of Registrant & Date

Texas Department of Transportation
© 2011

SH 289
DRAINAGE PLAN/PROFILE
LINE H2 & H4

SCALE: 1"=50' SHEET 2 OF 2

DESIGN	FED.RD. DIV.NO.	STATE PROJECT NO.		HIGHWAY NO.
SHM	6	SEE TITLE SHEET		SH 289
GRAPHICS	STATE	DISTRICT	COUNTY	SHEET NO.
WAV	TEXAS	18	COLLIN	
CHECK	CONTROL	SECTION	JOB	253
CHECK	0091	03	021	

P-201107-01

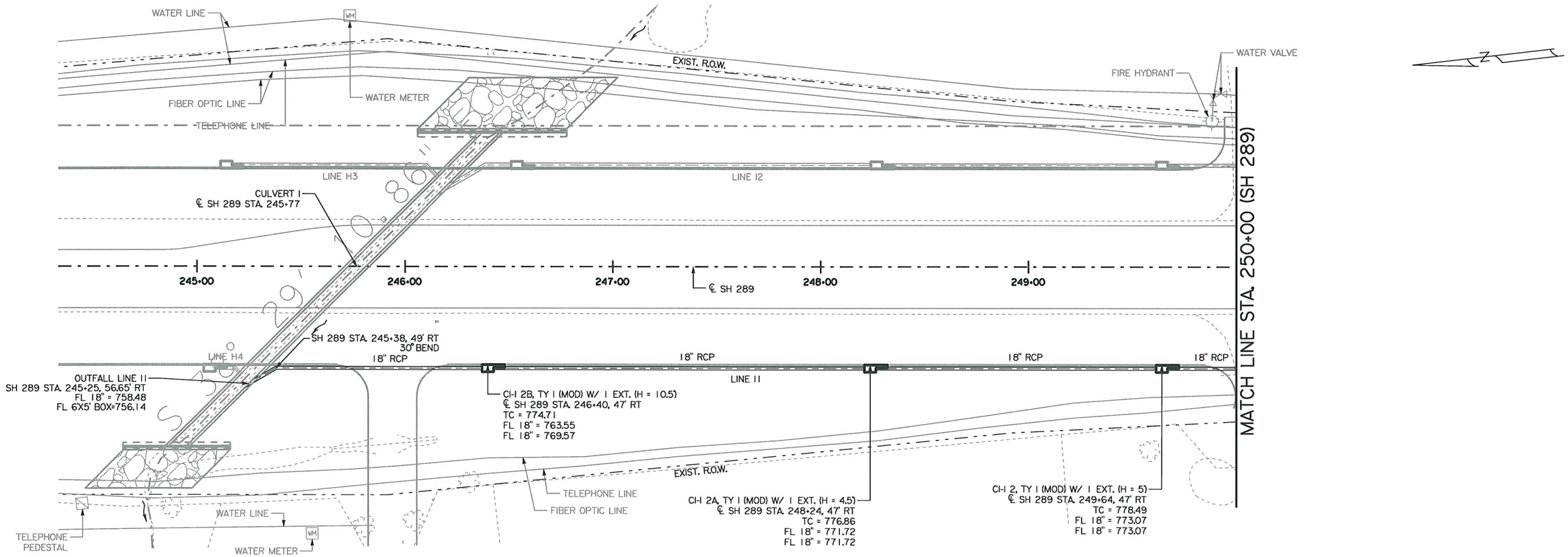

STATE OF TEXAS
HASSAN SAM MOGHADASSI
84231
LICENSED
PROFESSIONAL ENGINEER

H. Moghadassi, P.E. 07.12.11
Signature of Registrant & Date

Texas Department of Transportation
© 2011

SH 289
DRAINAGE PLAN/PROFILE
LINE 11

SCALE: 1"=50' SHEET 1 OF 6

DESIGN	FED. RD. DIV. NO.	STATE PROJECT NO.		HIGHWAY NO.
SHM	6	SEE TITLE SHEET		SH 289
GRAPHICS	STATE	DISTRICT	COUNTY	SHEET NO.
WAV	TEXAS	18	COLLIN	
CHECK	CONTROL	SECTION	JOB	254
CHECK	0091	03	021	

P-201107-01

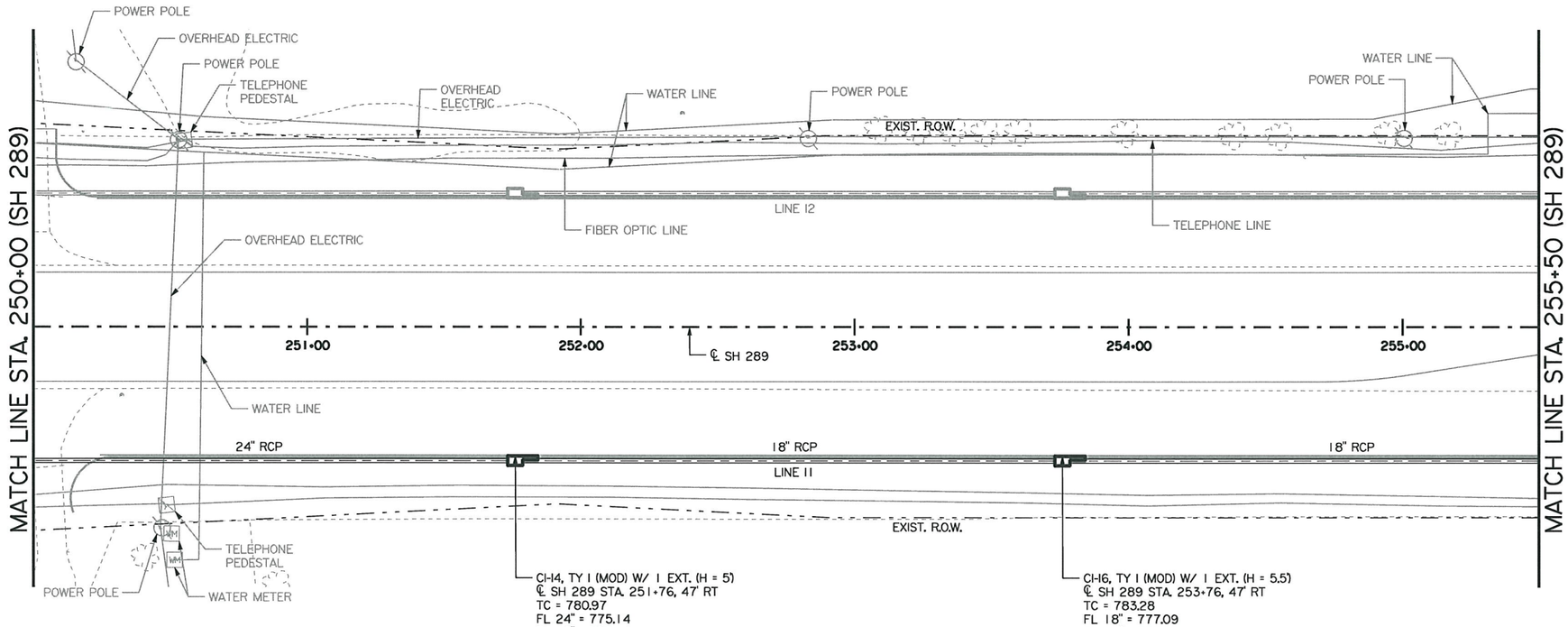

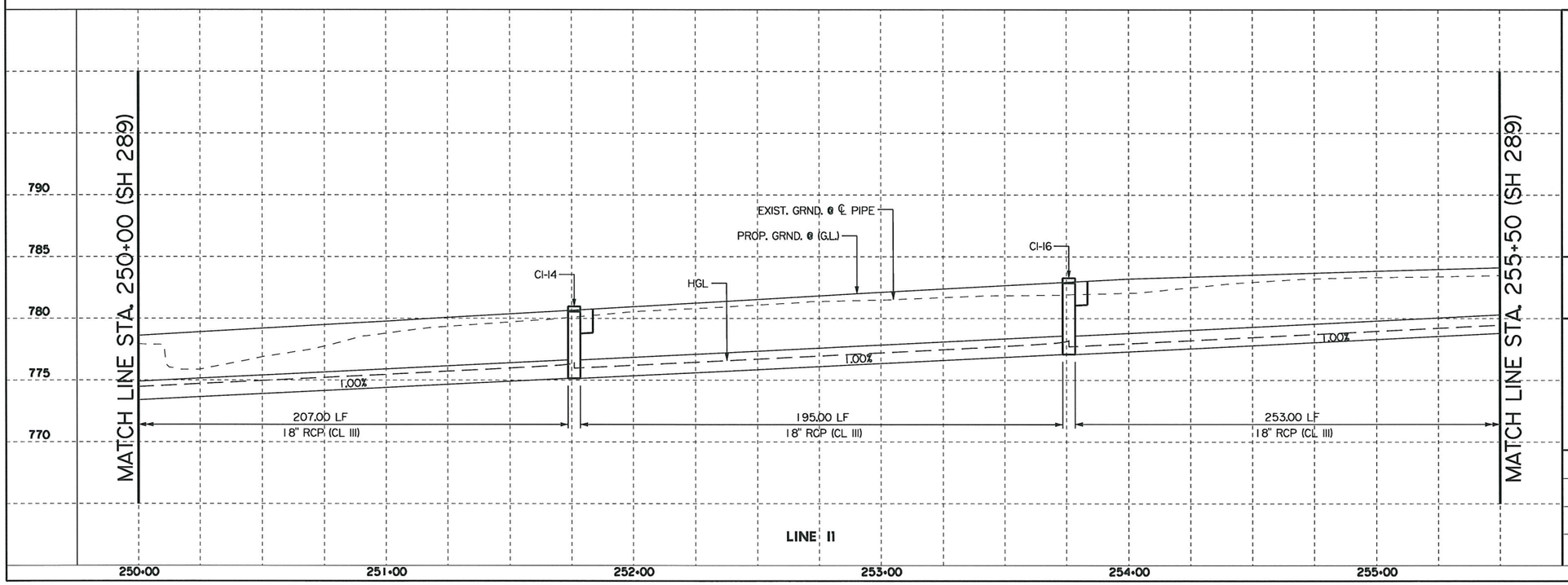

STATE OF TEXAS
HASSAN SAM MOGHADASSI
84231
LICENSED
PROFESSIONAL ENGINEER

H.M Moghadassi, P.E. 07.12.11
Signature of Registrant & Date

Texas Department of Transportation
© 2011

SH 289
DRAINAGE PLAN/PROFILE
LINE 11

SCALE: 1"=50' SHEET 2 OF 6

DESIGN	FED.RD. DIV.NO.	STATE PROJECT NO.		HIGHWAY NO.
SHM	6	SEE TITLE SHEET		SH 289
GRAPHICS WAV	STATE	DISTRICT	COUNTY	SHEET NO.
CHECK	TEXAS	18	COLLIN	255
CHECK	CONTROL	SECTION	JOB	
	0091	03	021	

P-201107-01

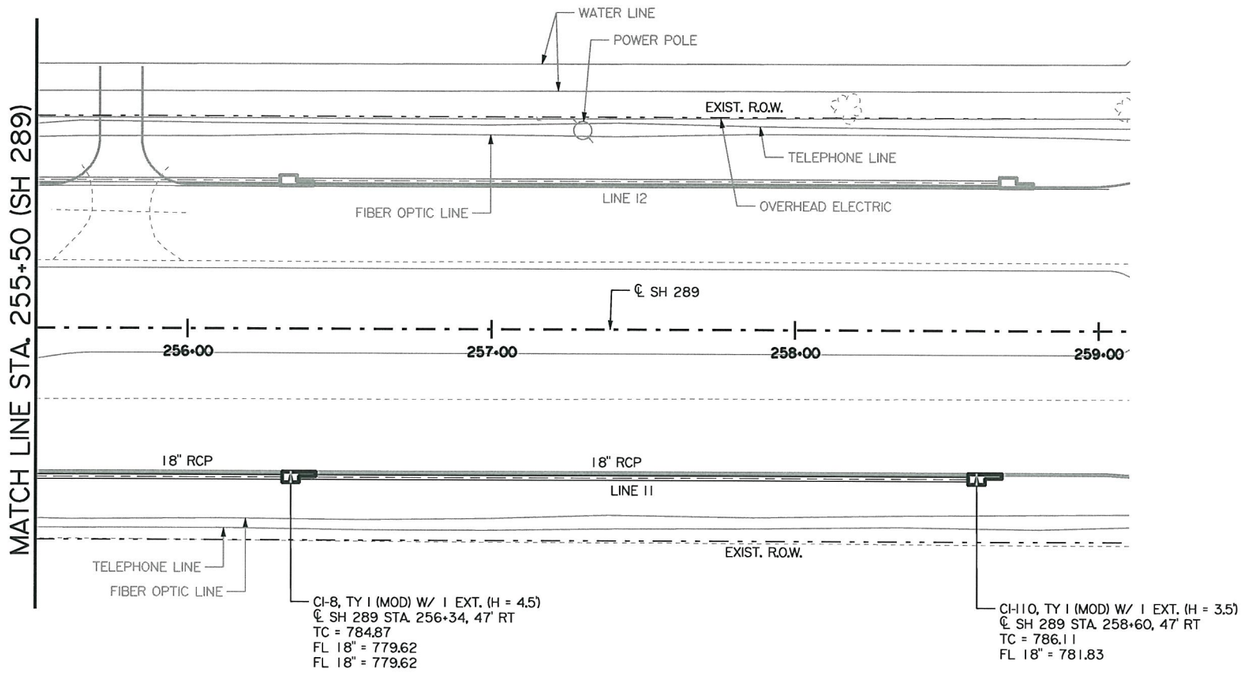

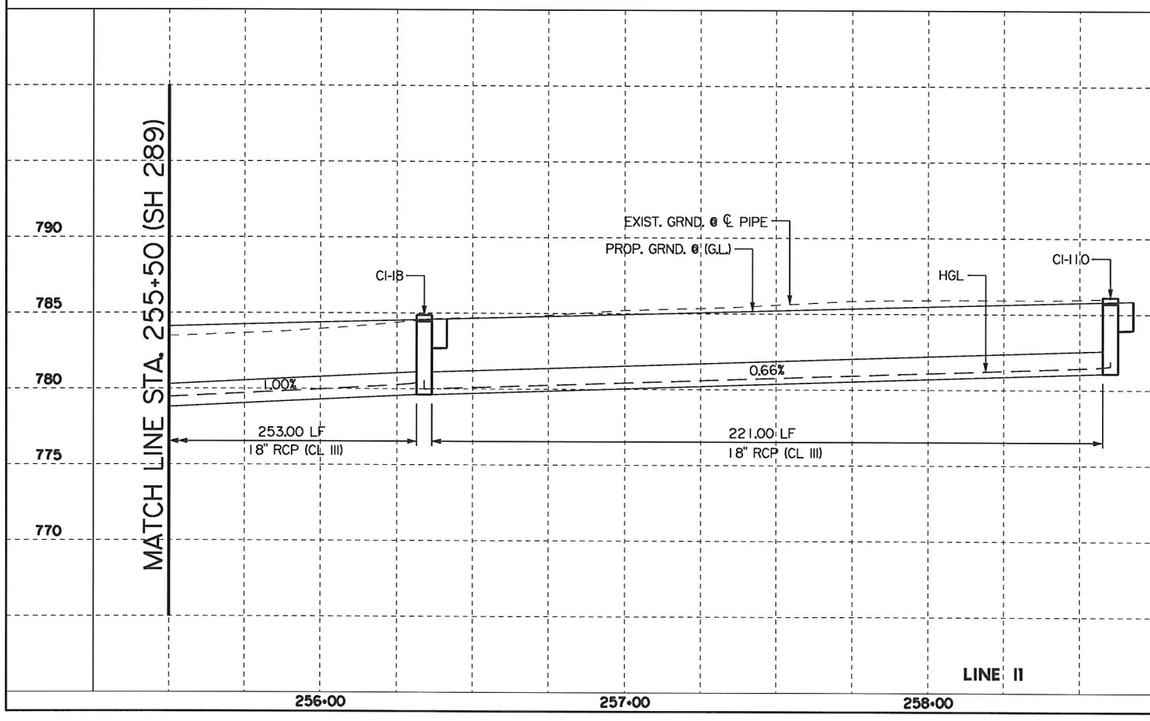

STATE OF TEXAS
HASSAN SAM MOGHADASSI
84231
LICENSED PROFESSIONAL ENGINEER

H. Moghadassi, P.E. 07.12.11
Signature of Registrant & Date

Texas Department of Transportation
© 2011

SH 289
DRAINAGE PLAN/PROFILE
LINE 11

SCALE: 1"=50'

SHEET 3 OF 6

DESIGN	FED. RD. DIV. NO.	STATE PROJECT NO.		HIGHWAY NO.
SHM	6	SEE TITLE SHEET		SH 289
GRAPHICS	STATE	DISTRICT	COUNTY	SHEET NO.
WAV	TEXAS	18	COLLIN	256
CHECK	CONTROL	SECTION	JOB	
CHECK	0091	03	021	

P-201107-01

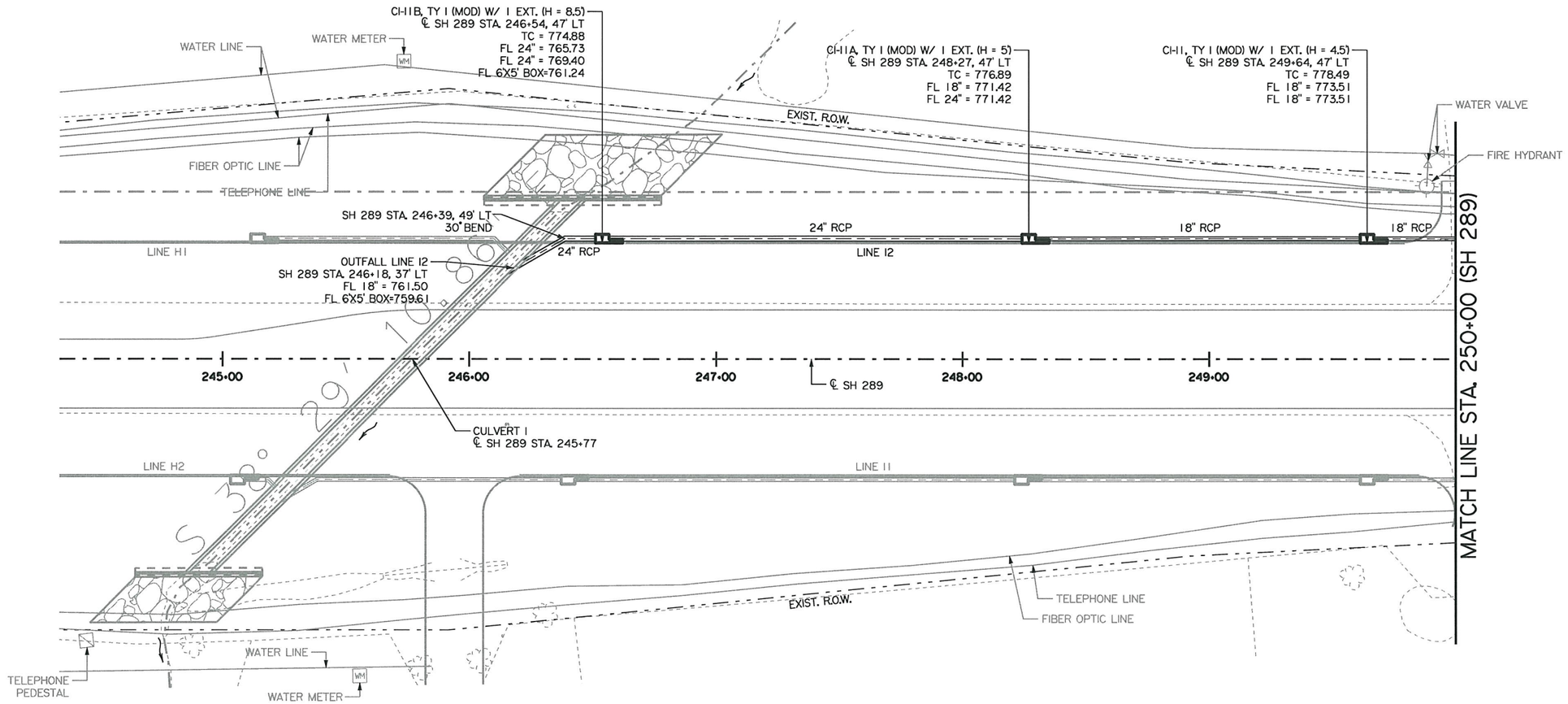

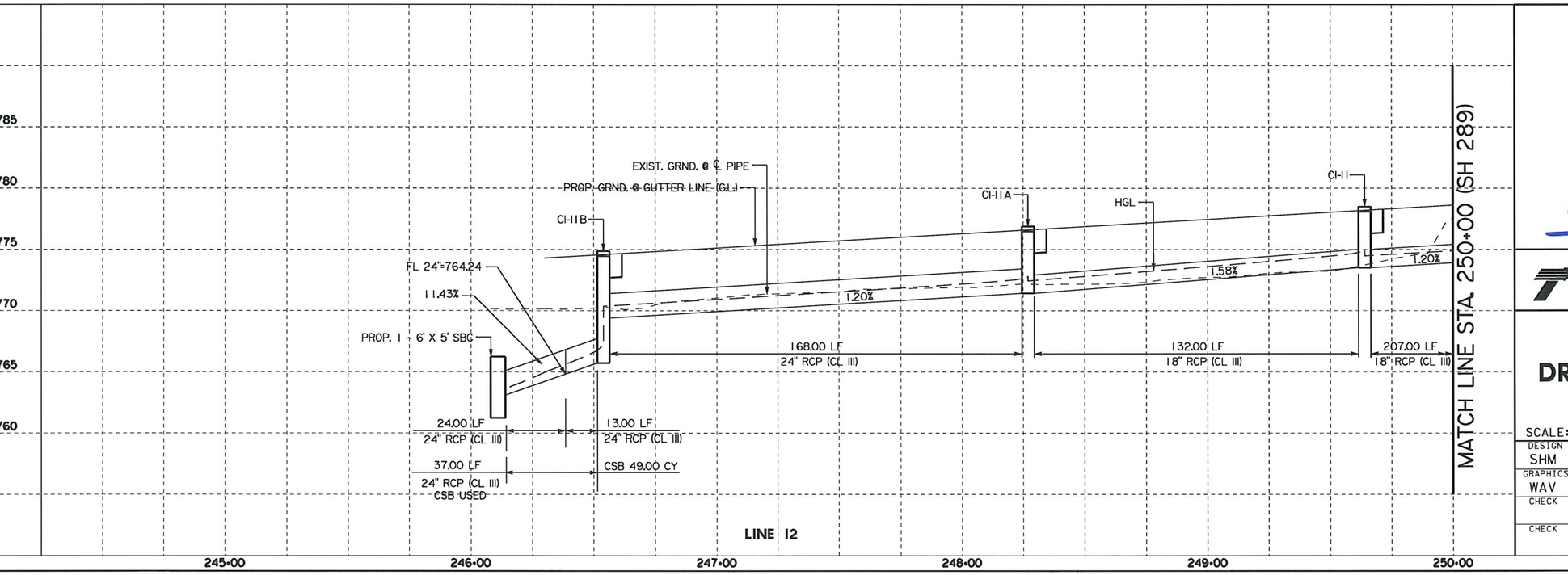

STATE OF TEXAS
HASSAN SAM MOGHADASSI
84231
LICENSED PROFESSIONAL ENGINEER

H Moghadassi, P.E. 07.12.11
Signature of Registrant & Date

Texas Department of Transportation
© 2011

SH 289
DRAINAGE PLAN/PROFILE
LINE 12

SCALE: 1"=50' SHEET 4 OF 6

DESIGN	FED. RD. DIV. NO.	STATE PROJECT NO.		HIGHWAY NO.
SHM	6	SEE TITLE SHEET		SH 289
GRAPHICS	STATE	DISTRICT	COUNTY	SHEET NO.
WAV	TEXAS	18	COLLIN	257
CHECK	CONTROL	SECTION	JOB	
CHECK	0091	03	021	

P-201107-01

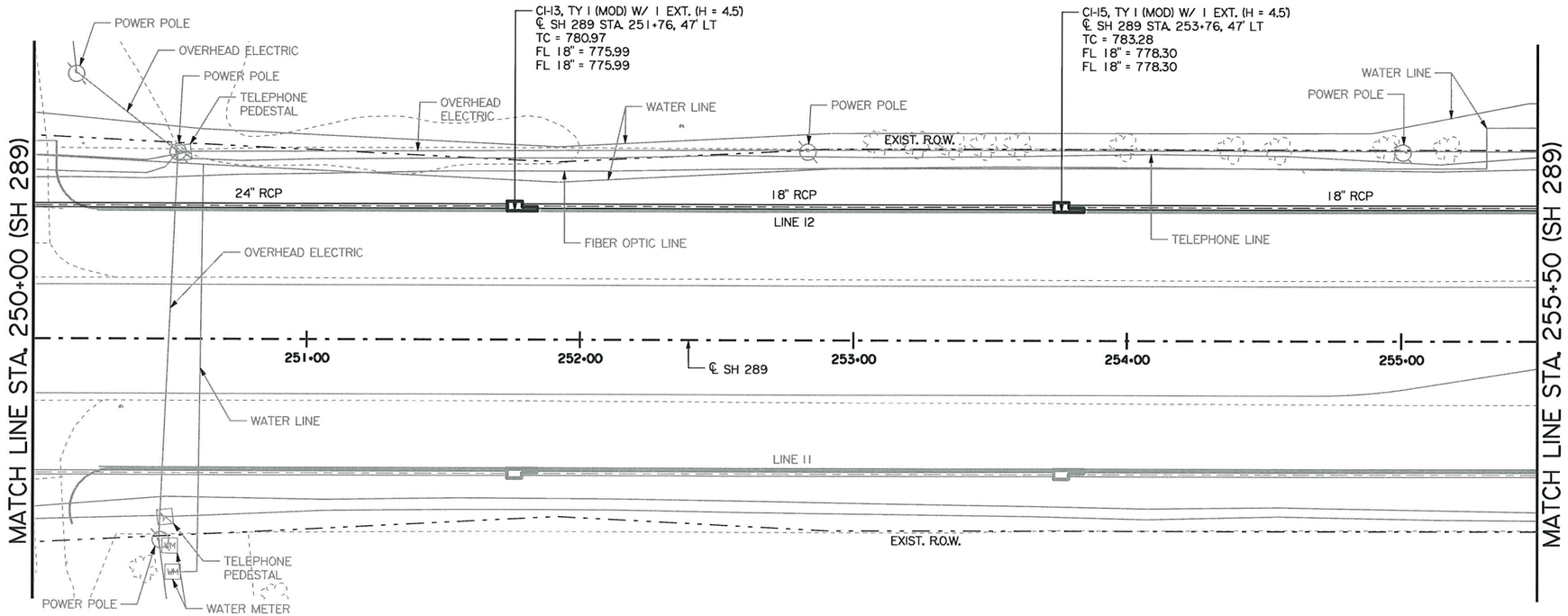

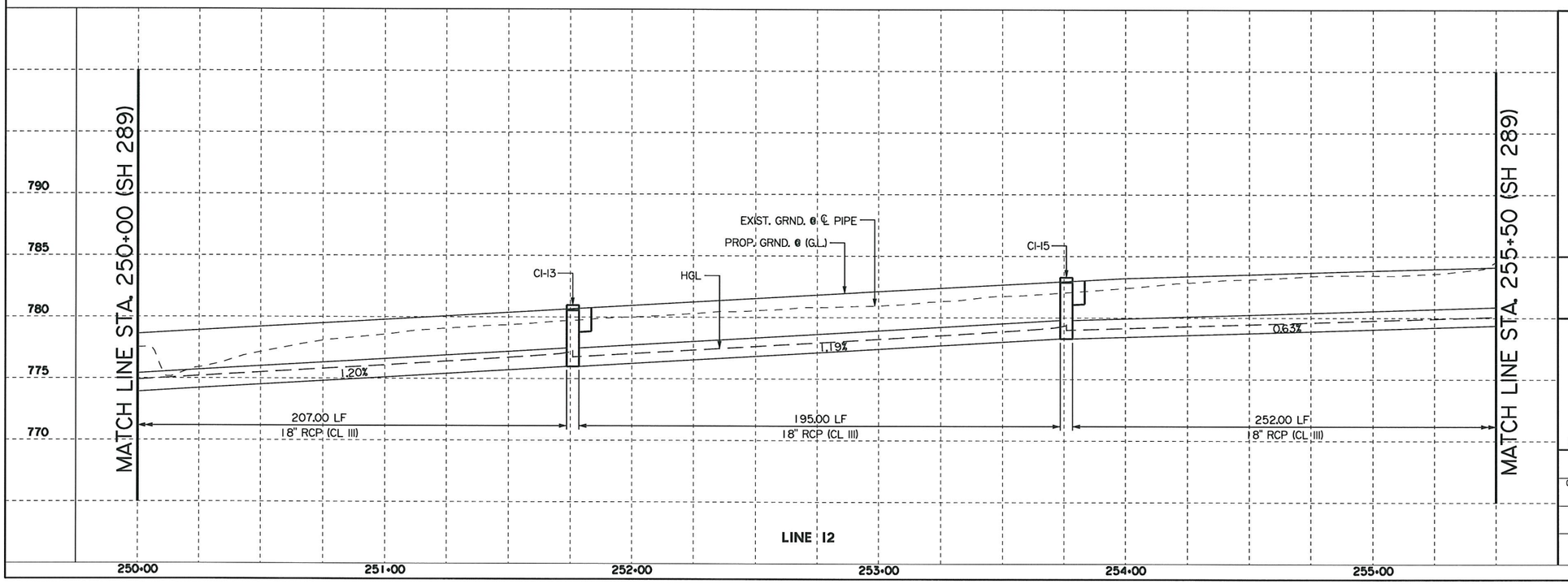

STATE OF TEXAS
HASSAN SAM MOGHADASSI
84231
LICENSED
PROFESSIONAL ENGINEER

H. Moghadassi, P.E. 07/12/11
Signature of Registrant & Date

Texas Department of Transportation
© 2011

SH 289
DRAINAGE PLAN/PROFILE
LINE 12

SCALE: 1"=50' SHEET 5 OF 6

DESIGN	FED. RD. DIV. NO.	STATE PROJECT NO.		HIGHWAY NO.
SHM	6	SEE TITLE SHEET		SH 289
GRAPHICS	STATE	DISTRICT	COUNTY	SHEET NO.
WAV	TEXAS	18	COLLIN	
CHECK	CONTROL	SECTION	JOB	258
CHECK	0091	03	021	

P-201107-01

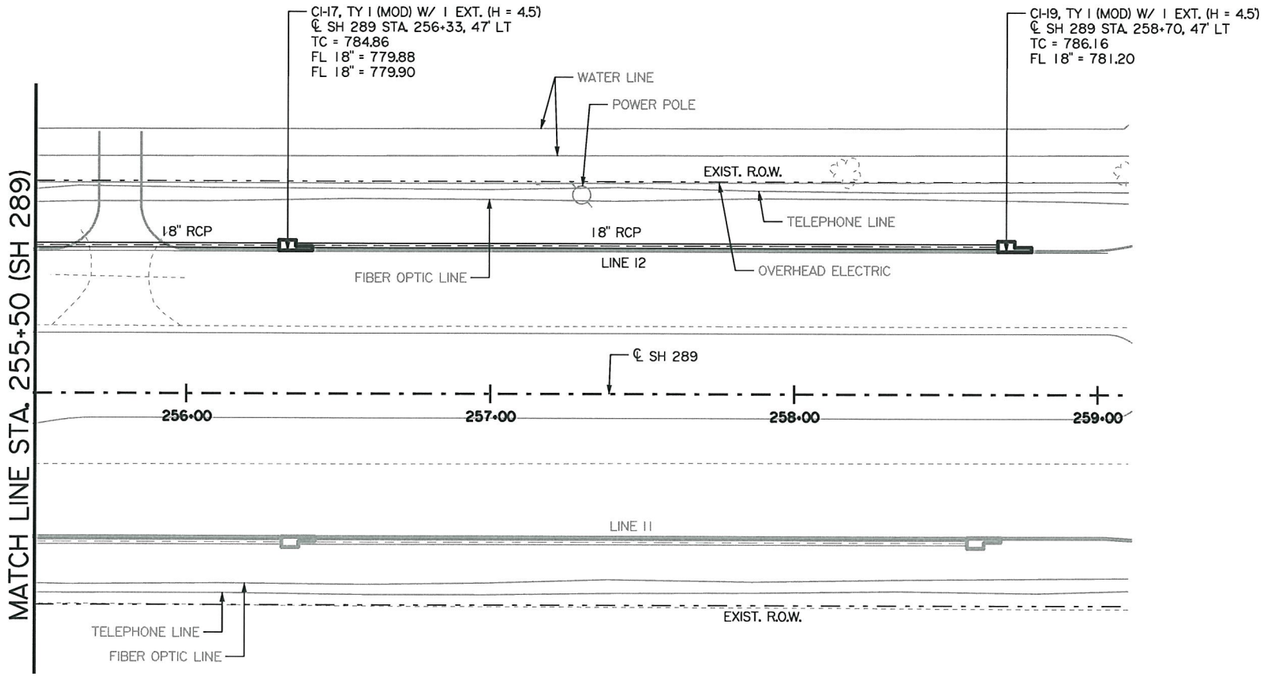

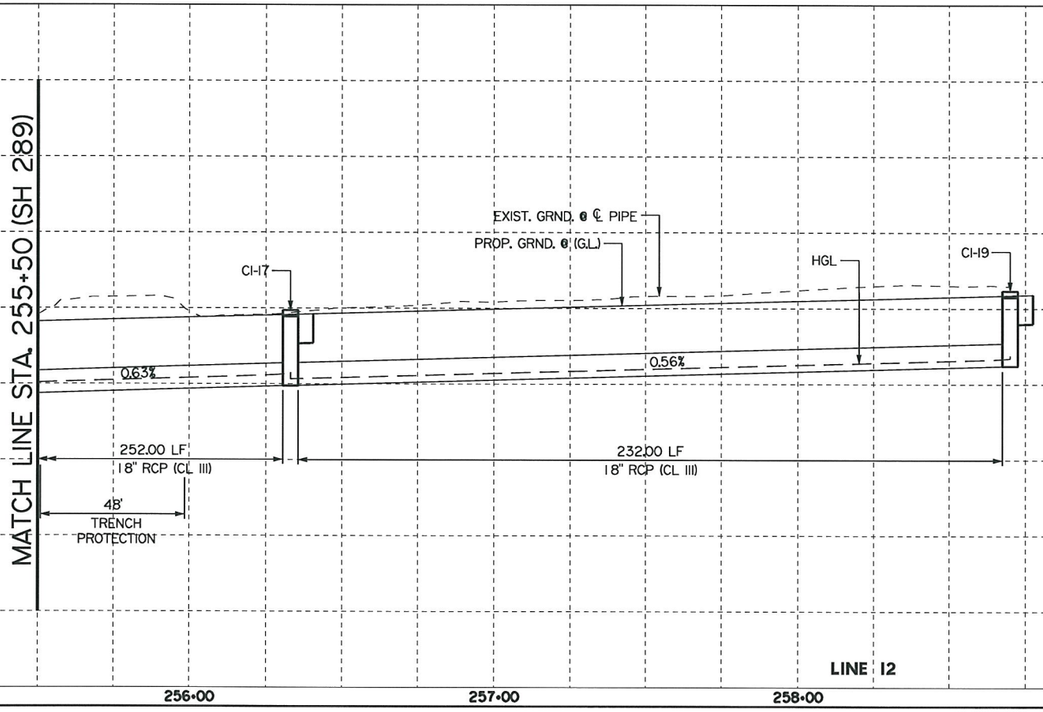

STATE OF TEXAS
HASSAN SAM MOGHADASSI
84231
LICENSED
PROFESSIONAL ENGINEER

H. Moghadassi , P.E. 07.12.11
Signature of Registrant & Date

Texas Department of Transportation
© 2011

SH 289
DRAINAGE PLAN/PROFILE
LINE 12

SCALE: 1"=50' SHEET 6 OF 6

DESIGN	FED. RD. DIV. NO.	STATE PROJECT NO.		HIGHWAY NO.
SHM	6	SEE TITLE SHEET		SH 289
GRAPHICS	STATE	DISTRICT	COUNTY	SHEET NO.
WAV	TEXAS	18	COLLIN	
CHECK	CONTROL	SECTION	JOB	259
CHECK	0091	03	021	

P-201107-01

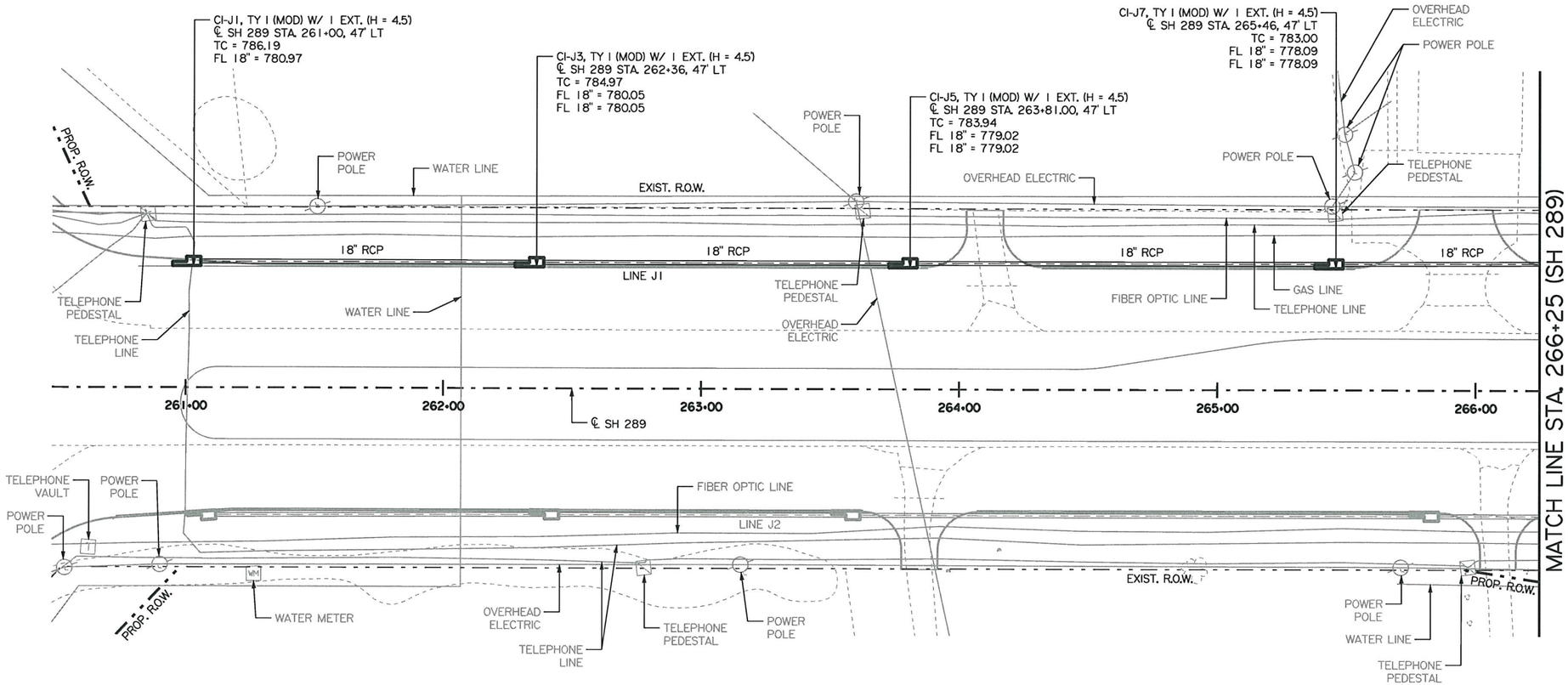

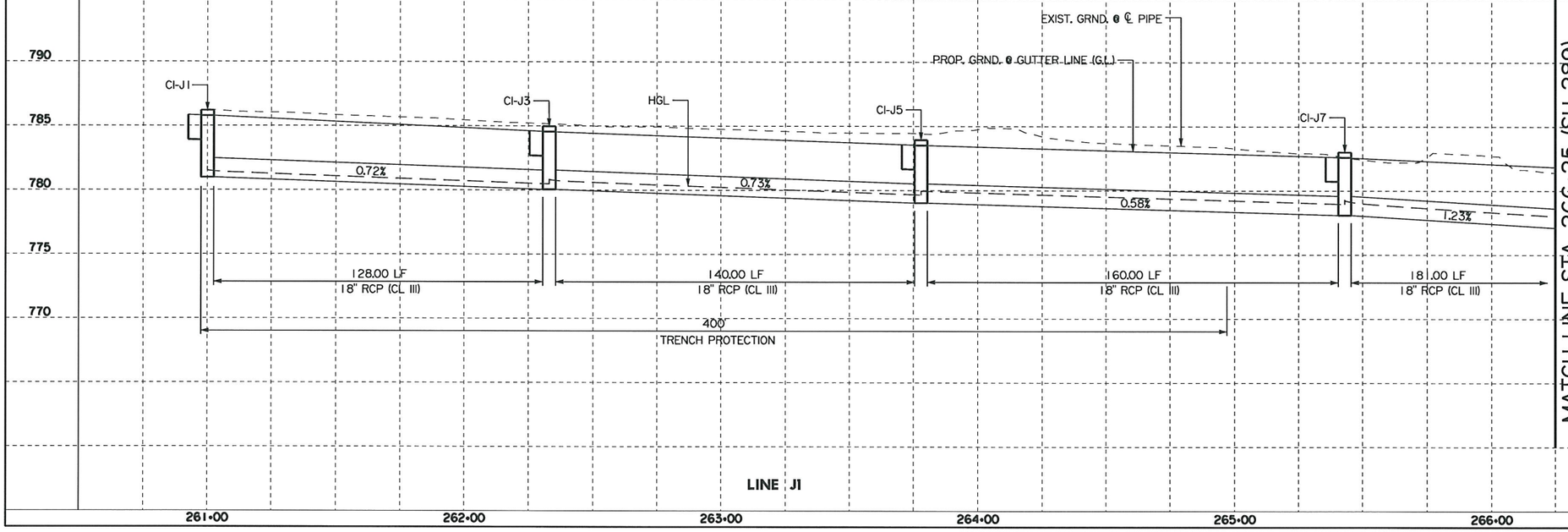

STATE OF TEXAS
HASSAN SAM MOGHADASSI
84231
LICENSED
PROFESSIONAL ENGINEER

H. Moghadassi, P.E. 07.12.11
Signature of Registrant & Date

Texas Department of Transportation
© 2011

SH 289
DRAINAGE PLAN/PROFILE
LINE J1

SCALE: 1"=50' SHEET 1 OF 16

DESIGN	FED. RD. DIV. NO.	STATE PROJECT NO.		HIGHWAY NO.
SHM	6	SEE TITLE SHEET		SH 289
GRAPHICS	STATE	DISTRICT	COUNTY	SHEET NO.
WAV	TEXAS	18	COLLIN	260
CHECK	CONTROL	SECTION	JOB	
CHECK	0091	03	021	

P-201107-01

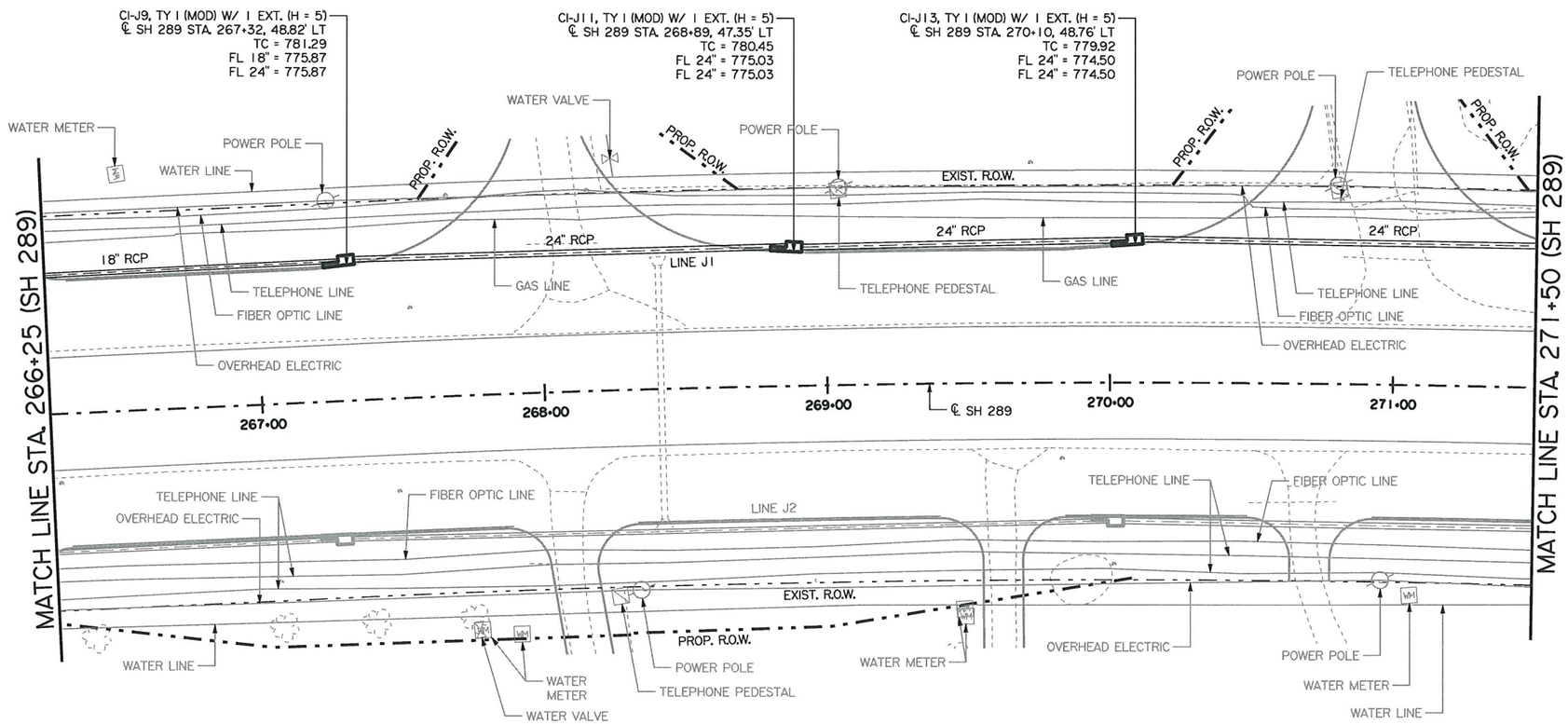

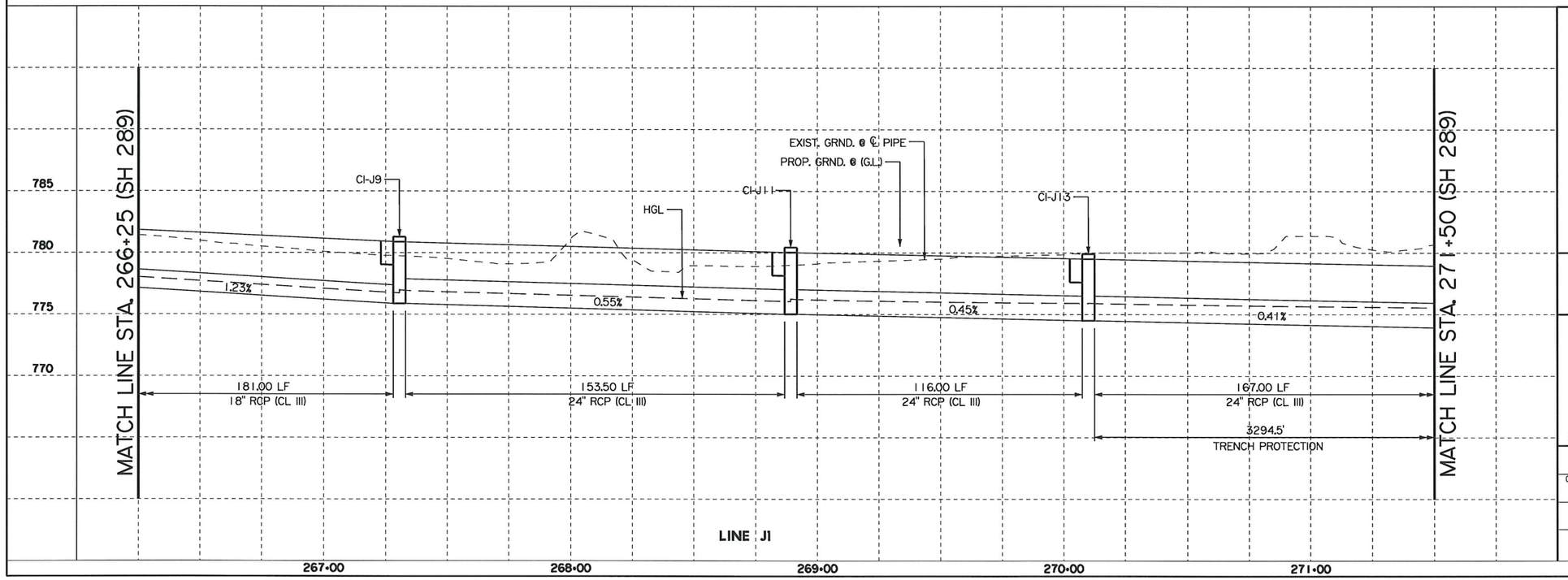

HASSAN SAM MOGHADASSI
84231
LICENSED PROFESSIONAL ENGINEER
Signature of Registrant, P.E. & Date 07/12/11

Texas Department of Transportation
© 2011

SH 289
DRAINAGE PLAN/PROFILE
LINE J1

SCALE: 1"=50'

SHEET 2 OF 16

DESIGN	FED. RD. DIV. NO.	STATE PROJECT NO.		HIGHWAY NO.
SHM	6	SEE TITLE SHEET		SH 289
GRAPHICS	STATE	DISTRICT	COUNTY	SHEET NO.
WAV	TEXAS	18	COLLIN	
CHECK	CONTROL	SECTION	JOB	261
CHECK	0091	03	021	

P-201107-01

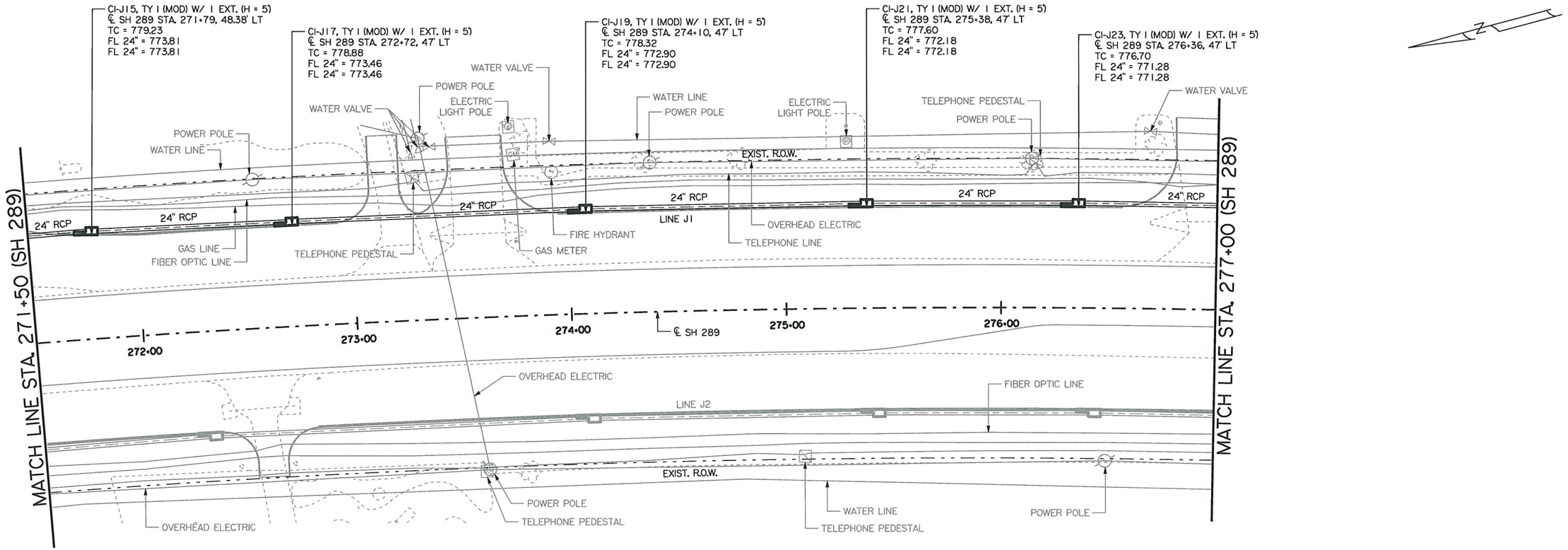

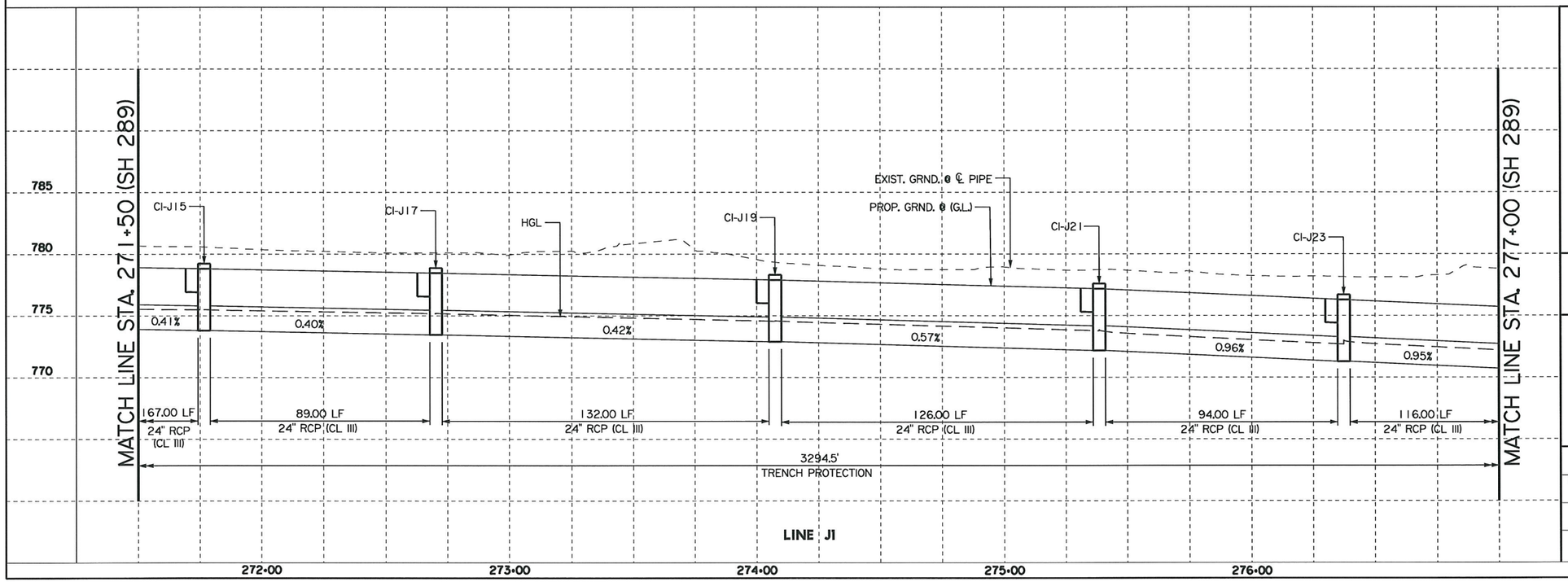

STATE OF TEXAS
HASSAN SAM MOGHADASSI
84231
LICENSED
PROFESSIONAL ENGINEER

H. Moghadassi , P.E. 07-12-11
Signature of Registrant & Date

Texas Department of Transportation
© 2011

SH 289
DRAINAGE PLAN/PROFILE
LINE J1

SCALE: 1"=50' SHEET 3 OF 16

DESIGN	FED. RD. DIV. NO.	STATE PROJECT NO.		HIGHWAY NO.
SHM	6	SEE TITLE SHEET		SH 289
GRAPHICS	STATE	DISTRICT	COUNTY	SHEET NO.
WAV	TEXAS	18	COLLIN	
CHECK	CONTROL	SECTION	JOB	262
CHECK	0091	03	021	

P-201107-01

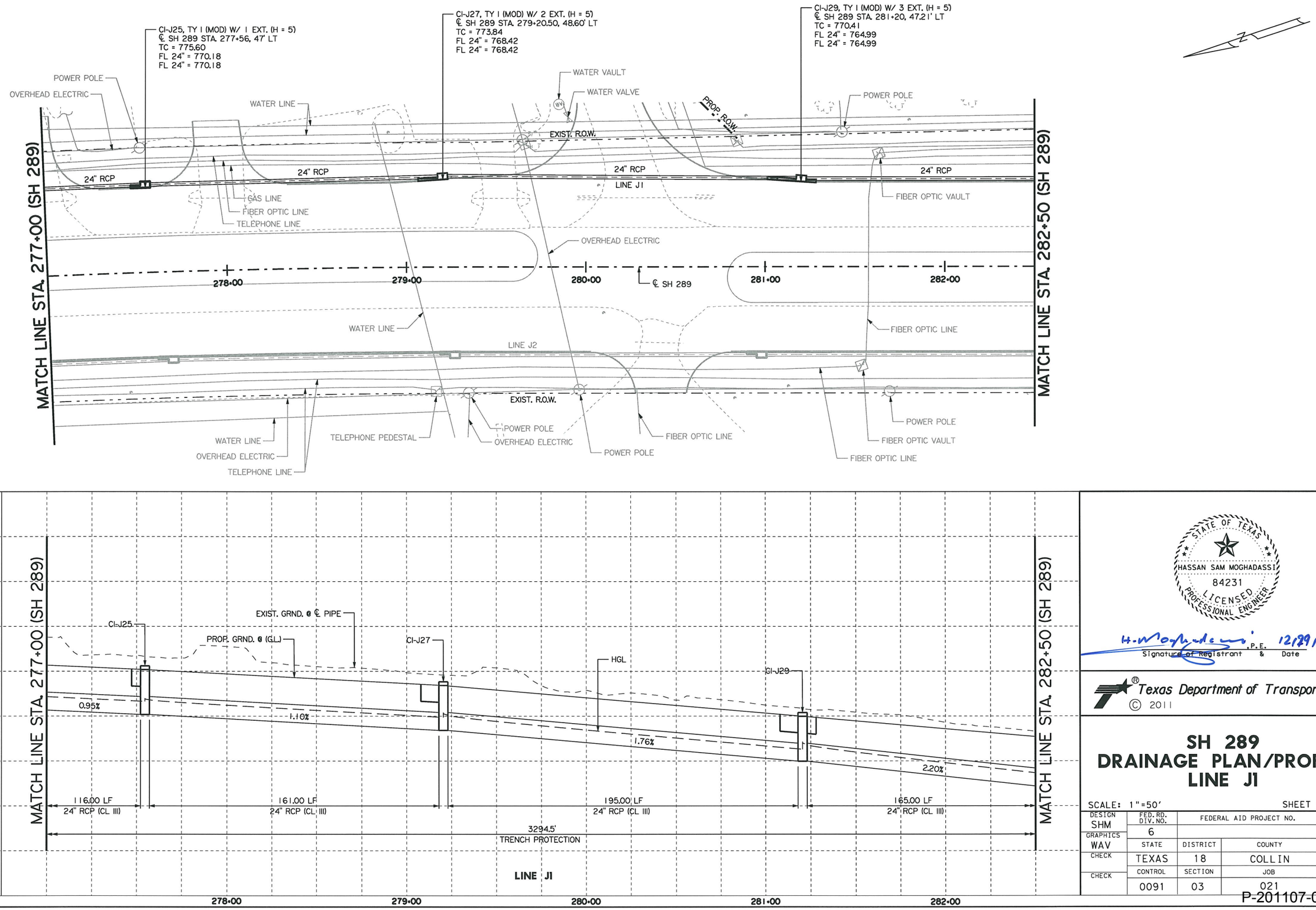

HASSAN SAM MOGHADASSI
84231
LICENSED PROFESSIONAL ENGINEER
STATE OF TEXAS

H. Moghadassi, P.E. 12/29/11
Signature of Registrant & Date

Texas Department of Transportation
© 2011

SH 289
DRAINAGE PLAN/PROFILE
LINE J1

SCALE: 1"=50' SHEET 4 OF 16

DESIGN	FED. RD. DIV. NO.	FEDERAL AID PROJECT NO.		HIGHWAY NO.
SHM	6			SH 289
GRAPHICS	STATE	DISTRICT	COUNTY	SHEET NO.
WAV	TEXAS	18	COLLIN	
CHECK	CONTROL	SECTION	JOB	263
CHECK	0091	03	021	

P-201107-01

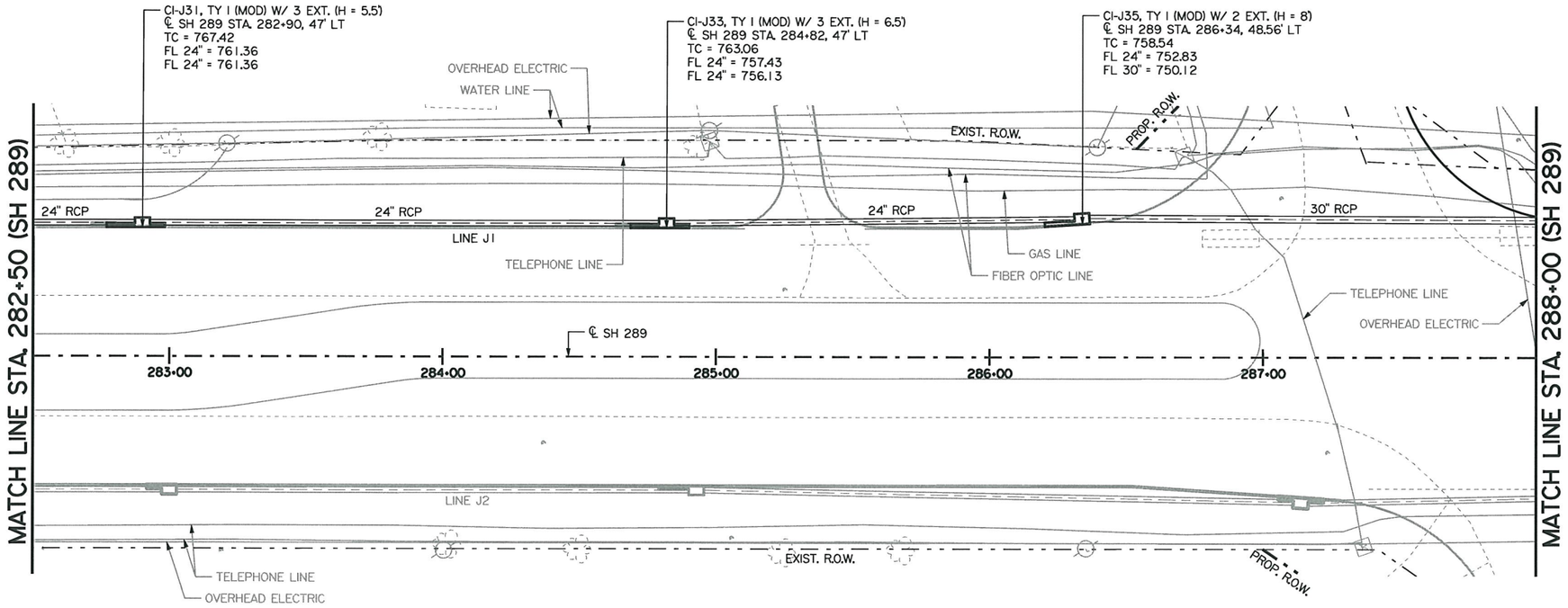

LEGEND

POWER POLE

TELEPHONE PEDESTAL

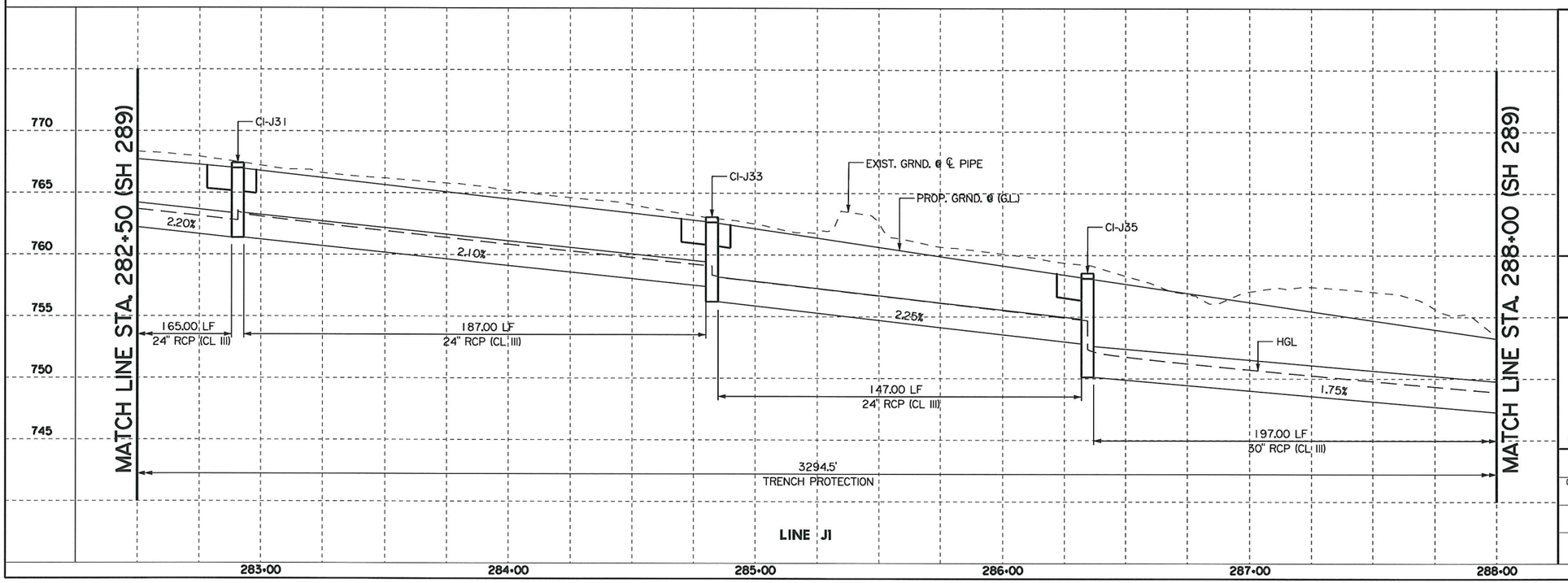

STATE OF TEXAS
HASSAN SAM MOGHADASSI
84231
LICENSED
PROFESSIONAL ENGINEER

H. Moghadassi, P.E. 07/12/11
Signature of Registrant & Date

Texas Department of Transportation
© 2011

SH 289
DRAINAGE PLAN/PROFILE
LINE J1

SCALE: 1"=50'

SHEET 5 OF 16

DESIGN	FED. RD. DIV. NO.	FEDERAL AID PROJECT NO.		HIGHWAY NO.
SHM	6			SH 289
GRAPHICS	STATE	DISTRICT	COUNTY	SHEET NO.
WAV	TEXAS	18	COLLIN	264
CHECK	CONTROL	SECTION	JOB	
CHECK	0091	03	021	

P-201107-01

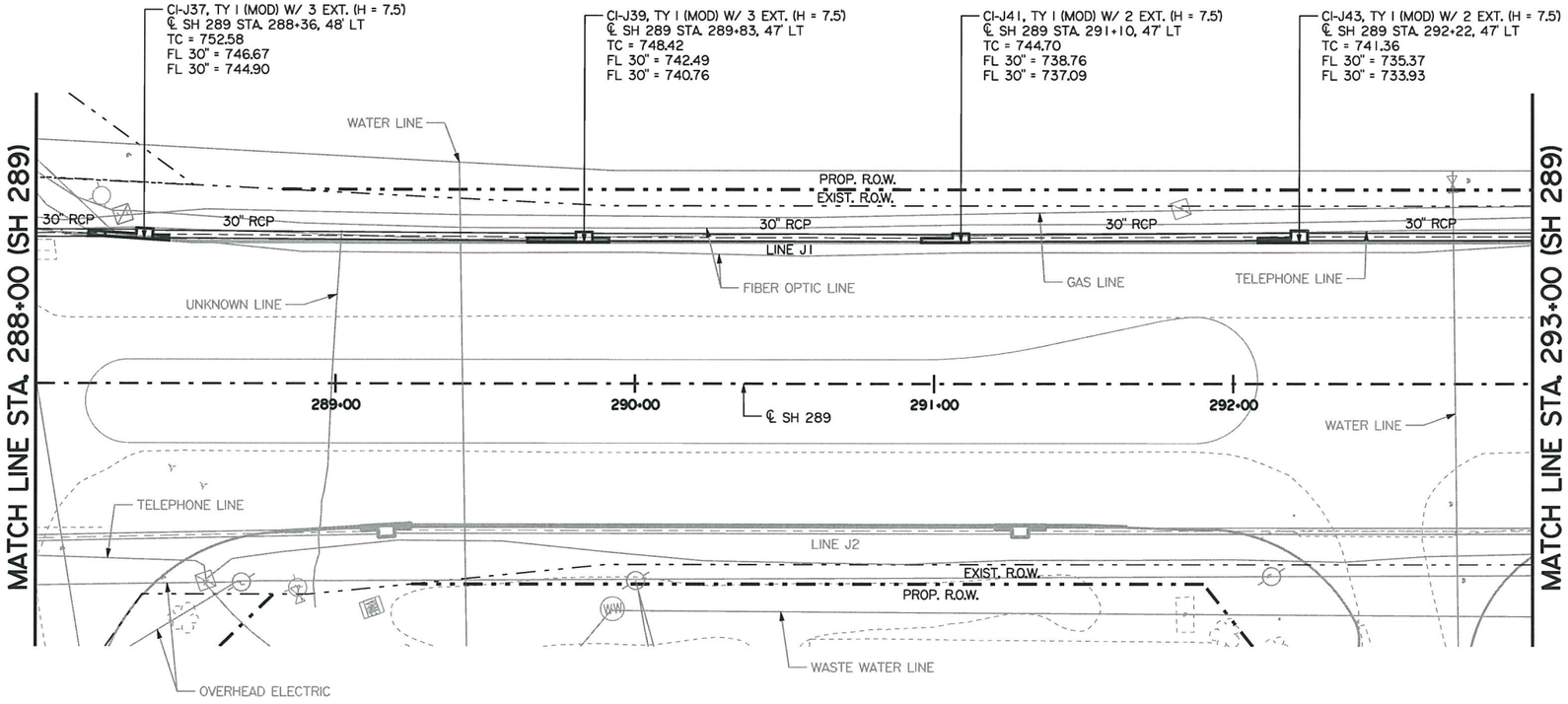

LEGEND

- POWER POLE
- TELEPHONE PEDESTAL
- WATER VALVE
- WM WATER METER
- FIRE HYDRANT
- FIBER OPTIC VAULT

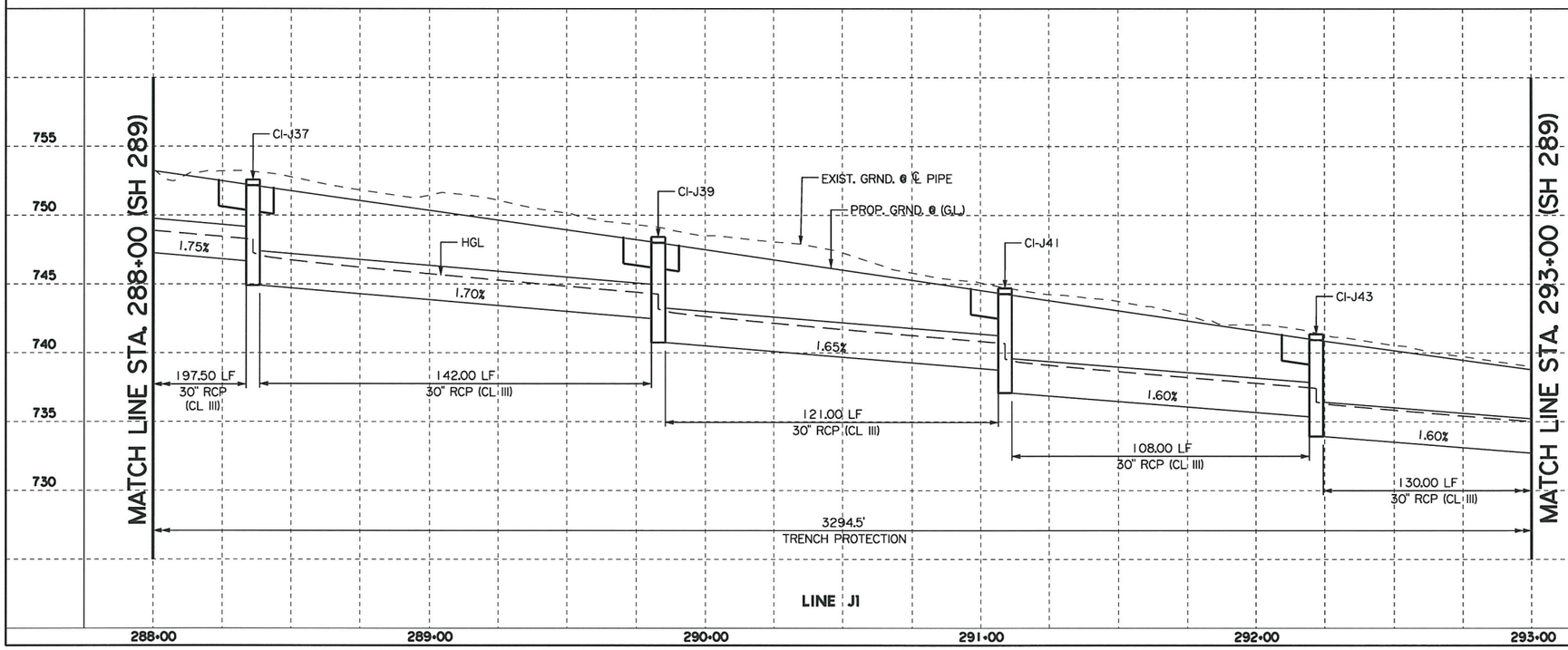

STATE OF TEXAS
HASSAN SAM MOGHADASSI
84231
LICENSED
PROFESSIONAL ENGINEER

H. Moghadassi ,P.E. 12/29/11
Signature of Registrant & Date

Texas Department of Transportation
© 2011

SH 289
DRAINAGE PLAN/PROFILE
LINE J1

SCALE: 1"=50' SHEET 6 OF 16

DESIGN	FED. RD. DIV. NO.	FEDERAL AID PROJECT NO.		HIGHWAY NO.
SHM	6			SH 289
GRAPHICS	STATE	DISTRICT	COUNTY	SHEET NO.
WAV	TEXAS	18	COLLIN	
CHECK	CONTROL	SECTION	JOB	265
CHECK	0091	03	021	

P-201107-01

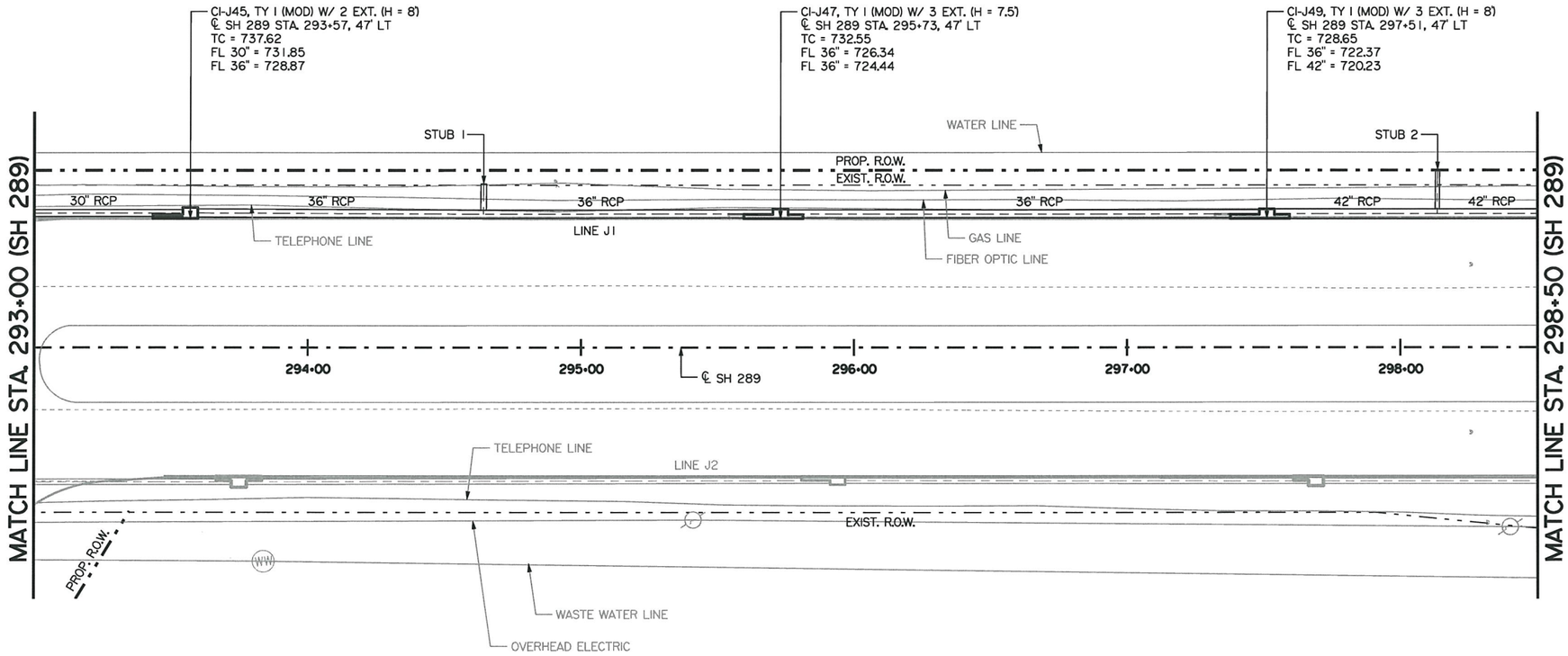

LEGEND

POWER POLE

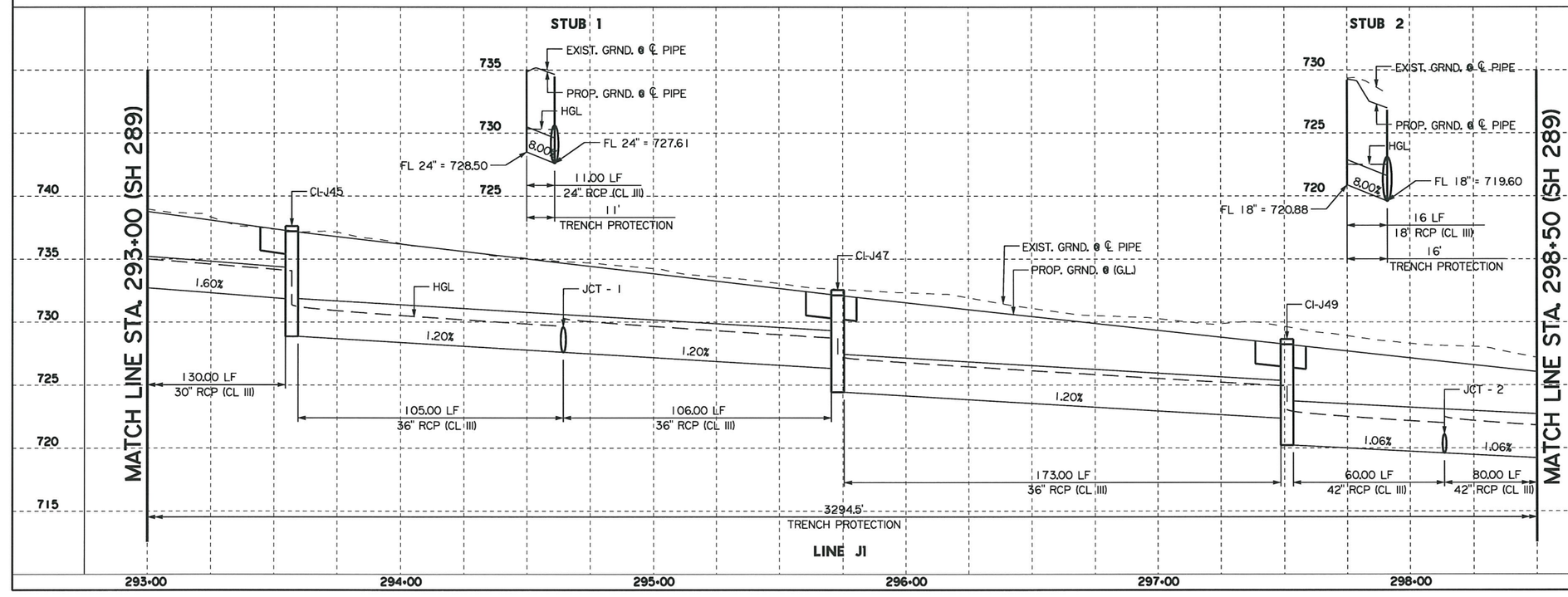

STATE OF TEXAS
HASSAN SAM MOGHADASSI
84231
LICENSED PROFESSIONAL ENGINEER

H. Moghadassi, P.E. 12/29/11
Signature of Registrant & Date

Texas Department of Transportation
© 2011

SH 289
DRAINAGE PLAN/PROFILE
LINE J1

SCALE: 1"=50'

SHEET 7 OF 16

DESIGN	FED. RD. DIV. NO.	FEDERAL AID PROJECT NO.		HIGHWAY NO.
SHM	6			SH 289
GRAPHICS	STATE	DISTRICT	COUNTY	SHEET NO.
WAV	TEXAS	18	COLLIN	
CHECK	CONTROL	SECTION	JOB	266
CHECK	0091	03	021	

P-201107-01

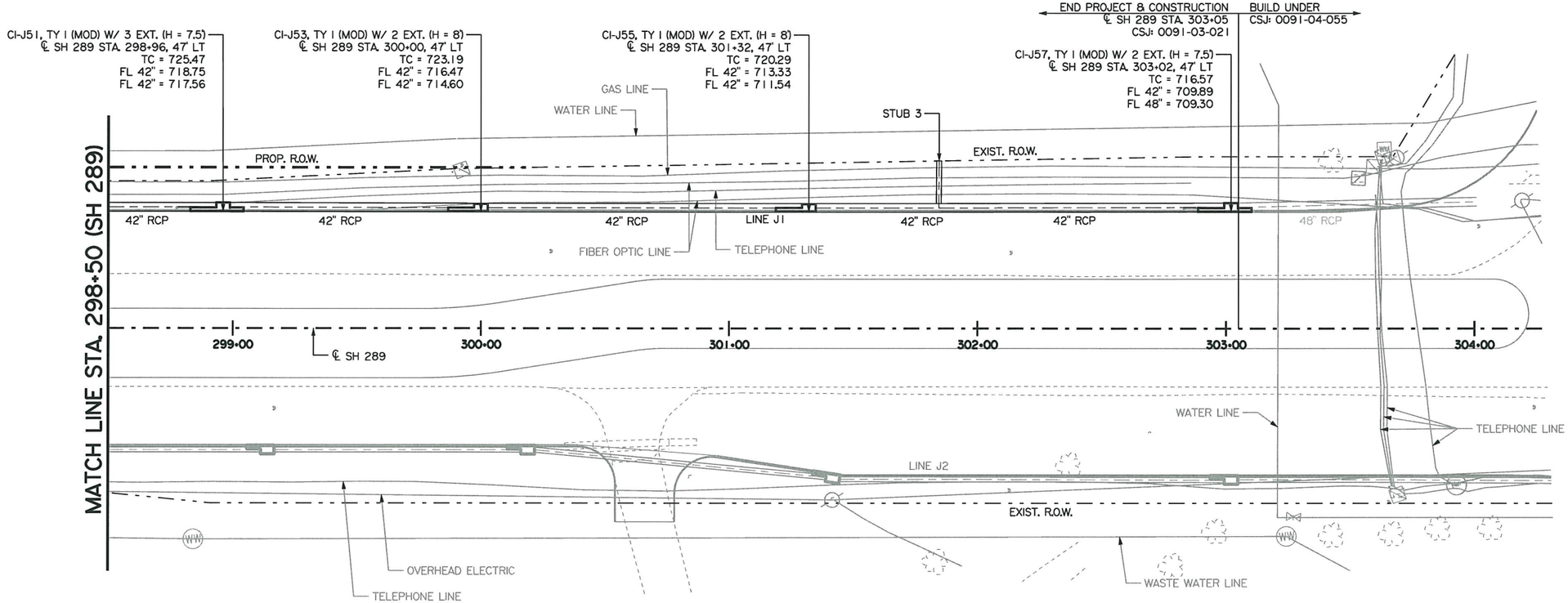

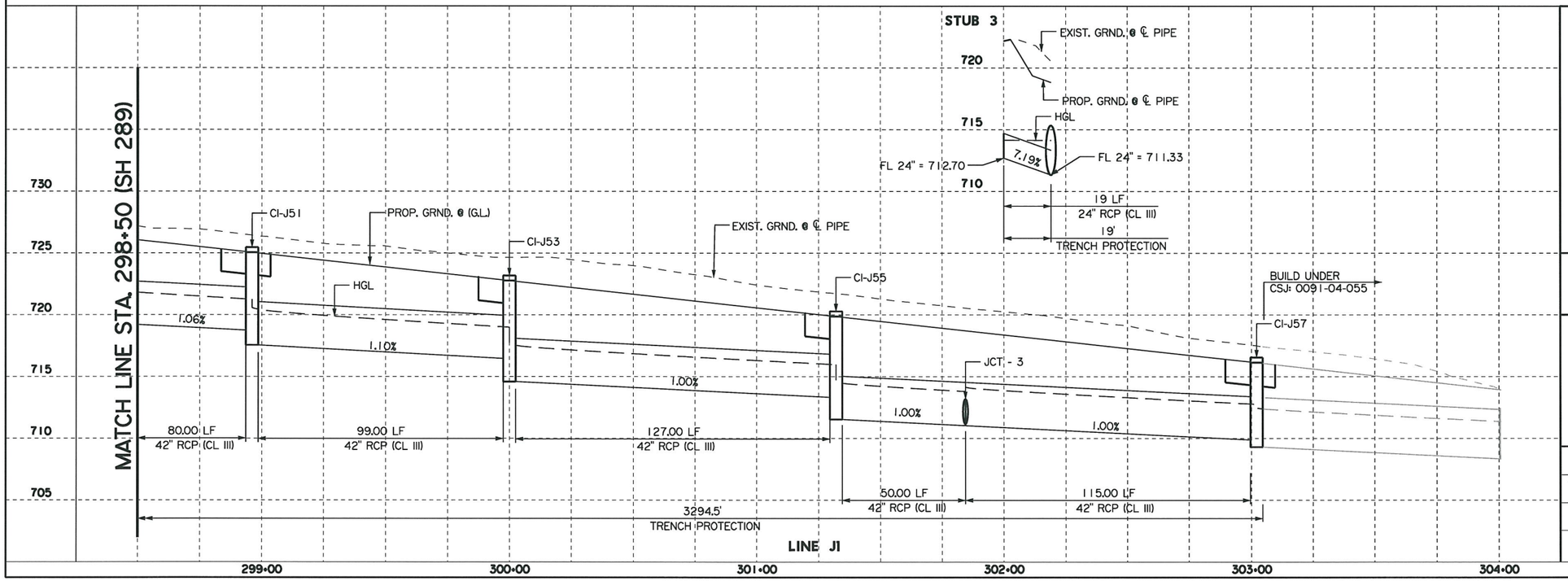

STATE OF TEXAS
HASSAN SAM MOGHADASSI
84231
LICENSED
PROFESSIONAL ENGINEER

H. Moghadassi, P.E. 12/29/11
Signature of Registrant & Date

Texas Department of Transportation
© 2011

SH 289
DRAINAGE PLAN/PROFILE
LINE J1

SCALE: 1"=50' SHEET 8 OF 16

DESIGN	FED. RD. DIV. NO.	FEDERAL AID PROJECT NO.		HIGHWAY NO.
SHM	6			SH 289
GRAPHICS	STATE	DISTRICT	COUNTY	SHEET NO.
WAV	TEXAS	18	COLLIN	
CHECK	CONTROL	SECTION	JOB	267
CHECK	0091	03	021	

P-201107-01

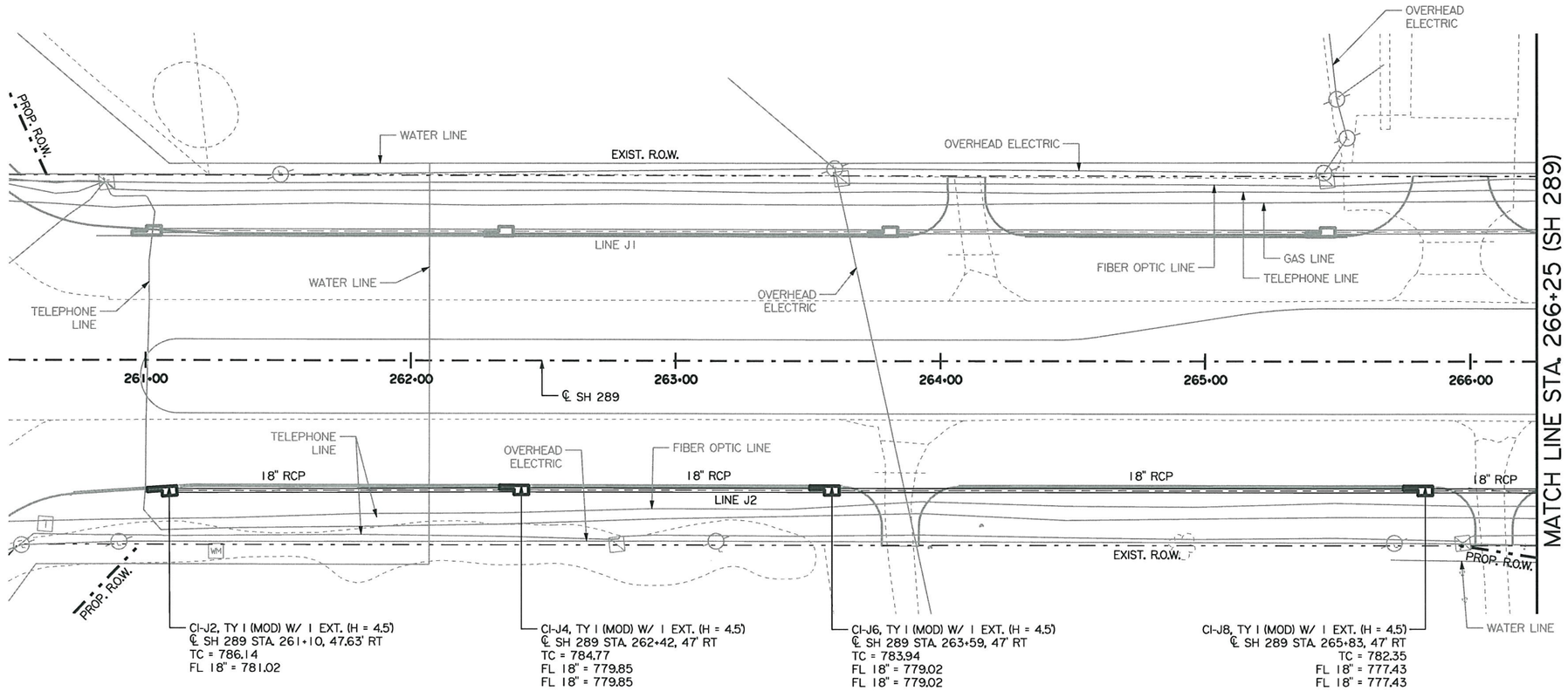

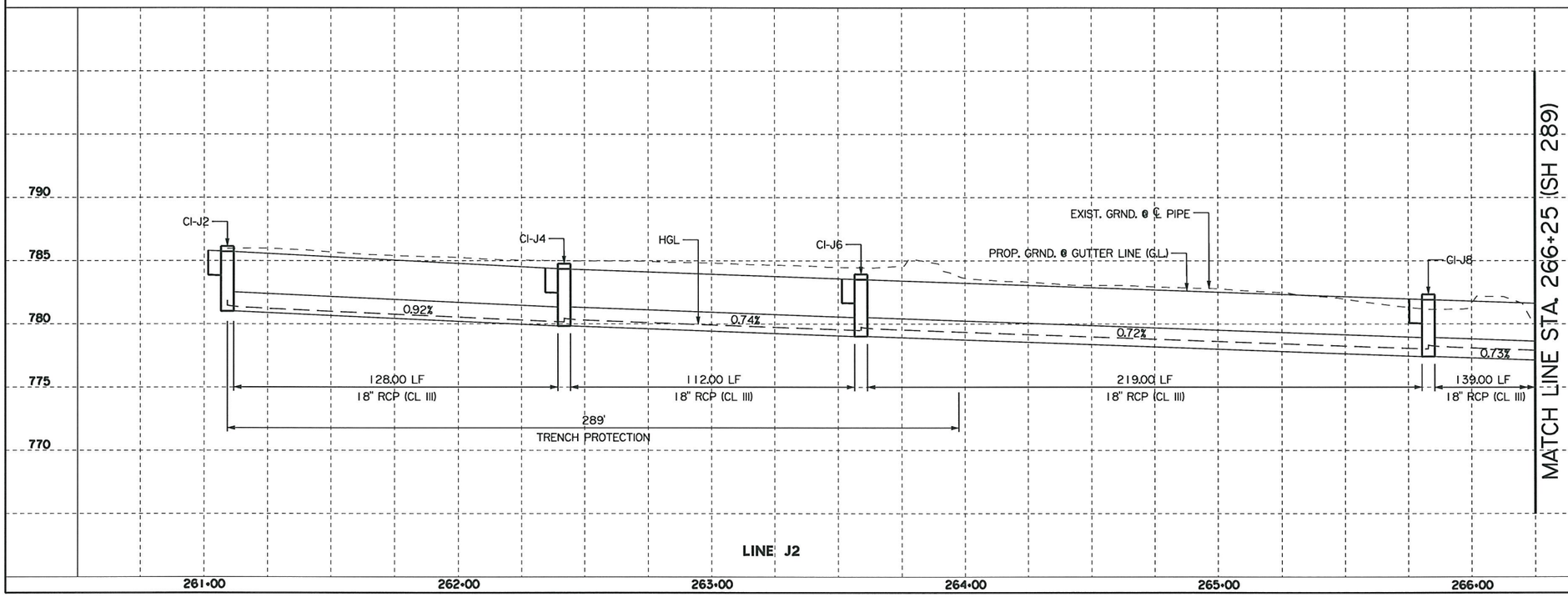

STATE OF TEXAS
HASSAN SAM MOGHADASSI
84231
LICENSED PROFESSIONAL ENGINEER

H. Moghadassi, P.E. 07-12-11
Signature of Registrant & Date

Texas Department of Transportation
© 2011

SH 289
DRAINAGE PLAN/PROFILE
LINE J2

SCALE: 1"=50'

SHEET 9 OF 16

DESIGN	FED. RD. DIV. NO.	STATE PROJECT NO.		HIGHWAY NO.
SHM	6	SEE TITLE SHEET		SH 289
GRAPHICS	STATE	DISTRICT	COUNTY	SHEET NO.
WAV	TEXAS	18	COLLIN	268
CHECK	CONTROL	SECTION	JOB	
CHECK	0091	03	021	

P-201107-01

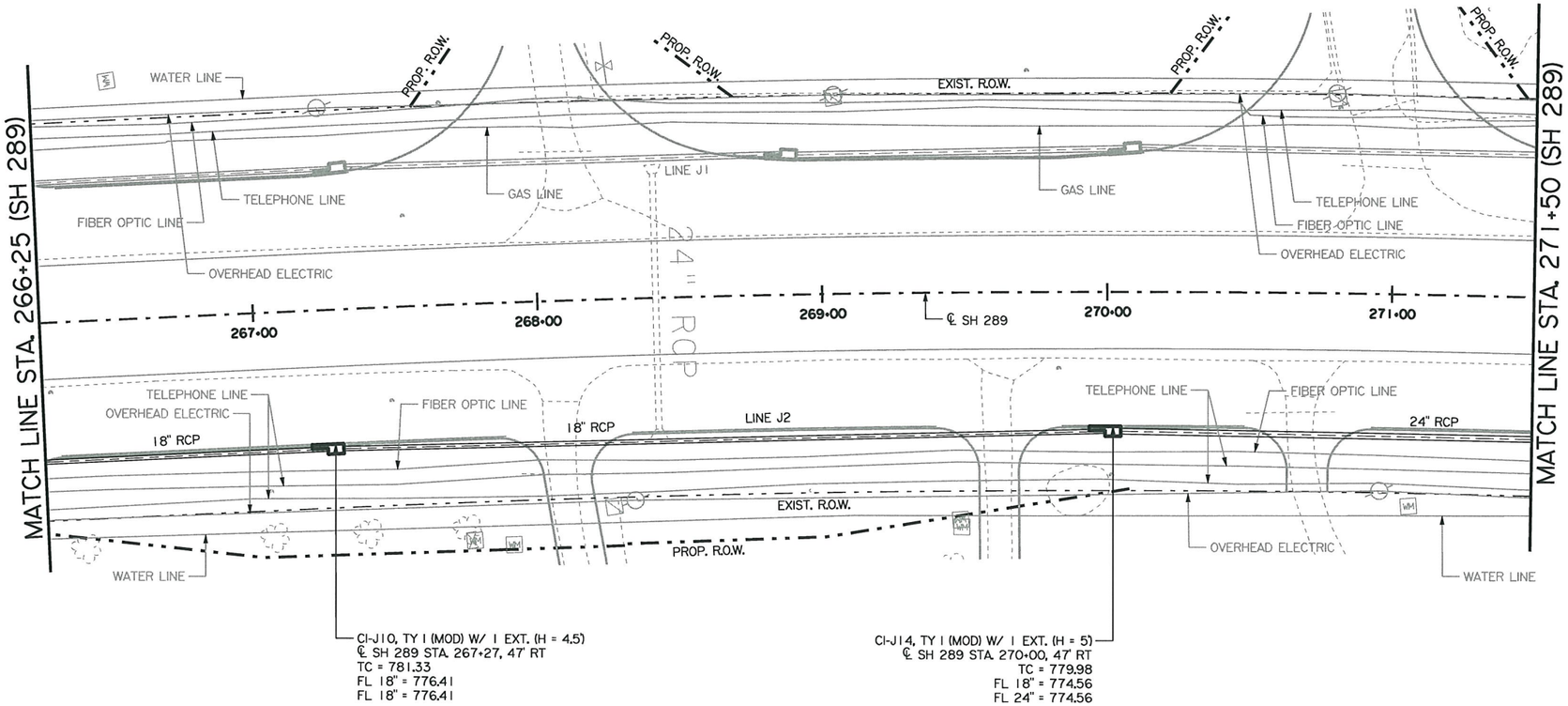

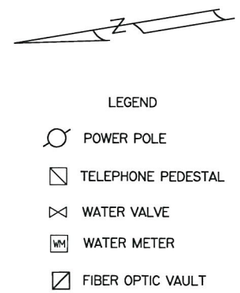

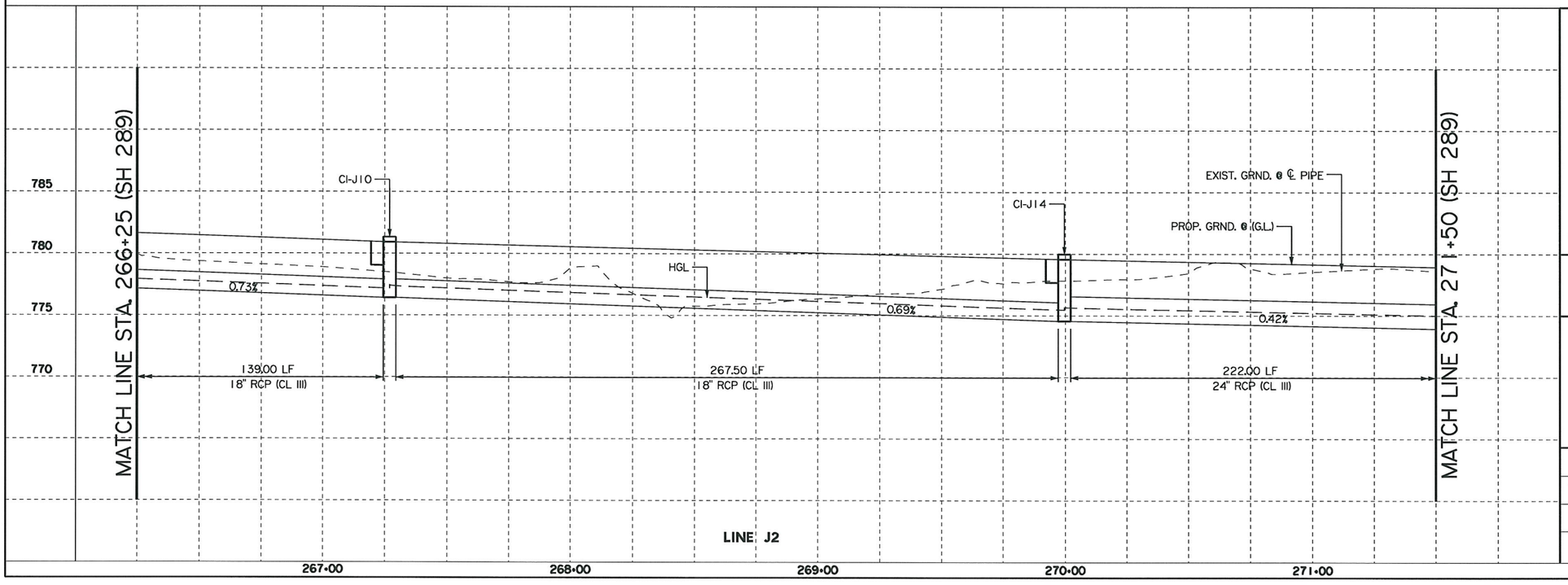

HASSAN SAM MOGHADASSI
84231
LICENSED PROFESSIONAL ENGINEER
STATE OF TEXAS

H. Moghadassi ,P.E. 07.12.11
Signature of Registrant & Date

Texas Department of Transportation
© 2011

SH 289
DRAINAGE PLAN/PROFILE
LINE J2

SCALE: 1"=50'

SHEET 10 OF 16

DESIGN	FED.RD. DIV.NO.	STATE PROJECT NO.		HIGHWAY NO.
SHM	6	SEE TITLE SHEET		SH 289
GRAPHICS WAV	STATE	DISTRICT	COUNTY	SHEET NO.
CHECK	TEXAS	18	COLLIN	
CHECK	CONTROL	SECTION	JOB	269
	0091	03	021	

P-201107-01

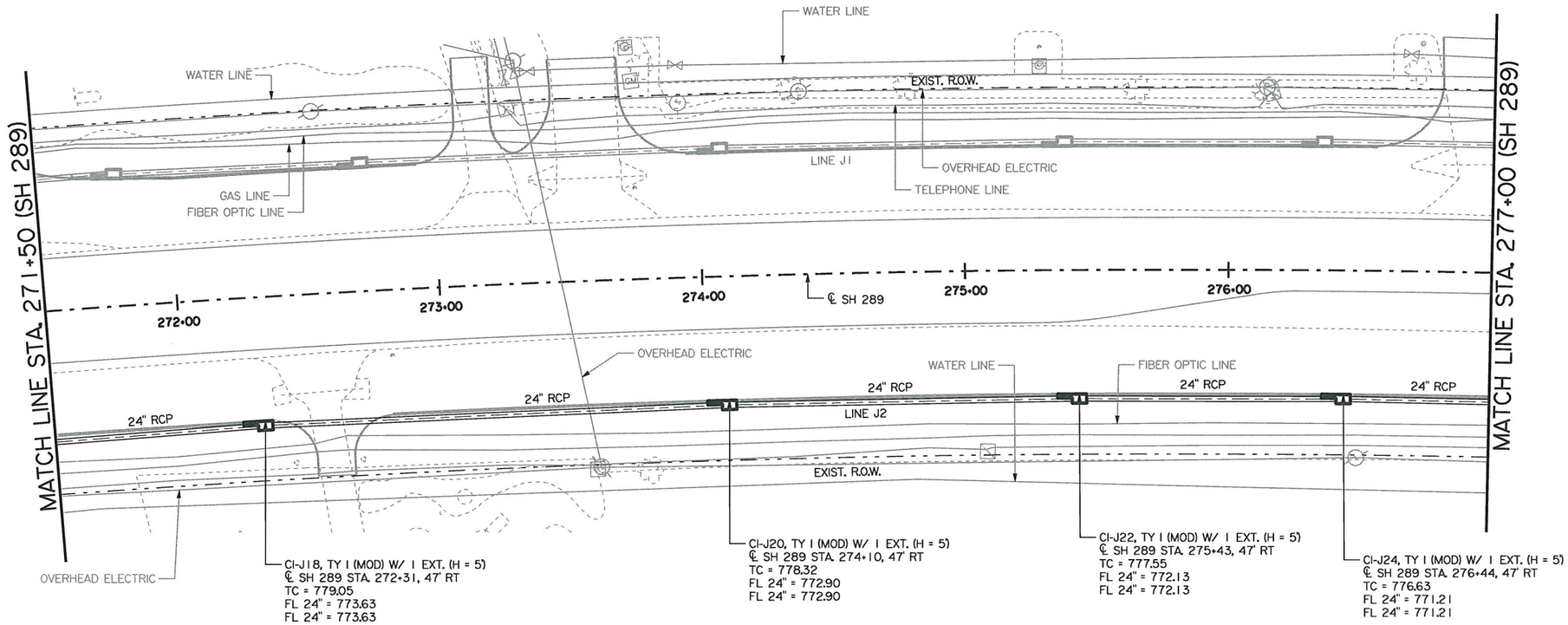

LEGEND

- POWER POLE
- TELEPHONE PEDESTAL
- WATER VALVE
- WM — WATER METER
- FIRE HYDRANT
- GM — GAS METER
- ELECTRIC LIGHT POLE

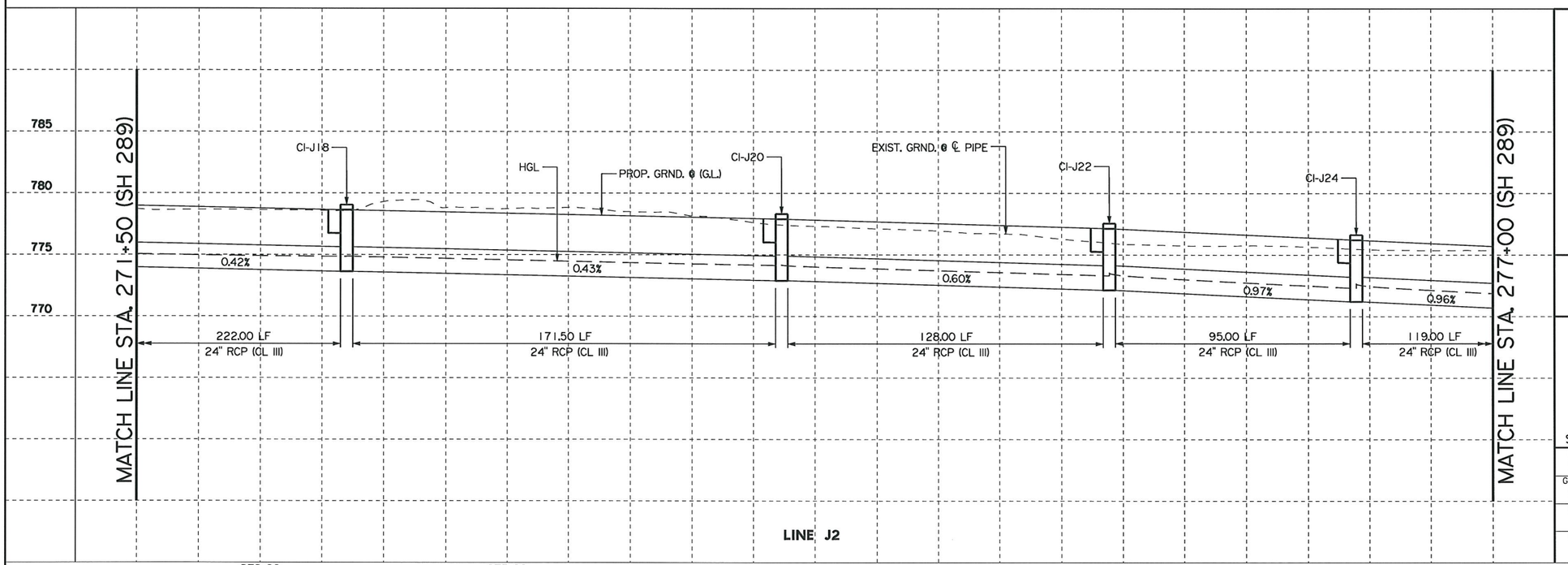

HASSAN SAM MOGHADASSI
84231
LICENSED PROFESSIONAL ENGINEER
STATE OF TEXAS

H.M Moghadassi, P.E. 07/12/11
Signature of Registrant & Date

Texas Department of Transportation
© 2011

SH 289
DRAINAGE PLAN/PROFILE
LINE J2

SCALE: 1"=50'

SHEET 11 OF 16

DESIGN	FED. RD. DIV. NO.	STATE PROJECT NO.		HIGHWAY NO.
SHM	6	SEE TITLE SHEET		SH 289
GRAPHICS	STATE	DISTRICT	COUNTY	SHEET NO.
WAV	TEXAS	18	COLLIN	
CHECK	CONTROL	SECTION	JOB	270
CHECK	0091	03	021	

P-201107-01

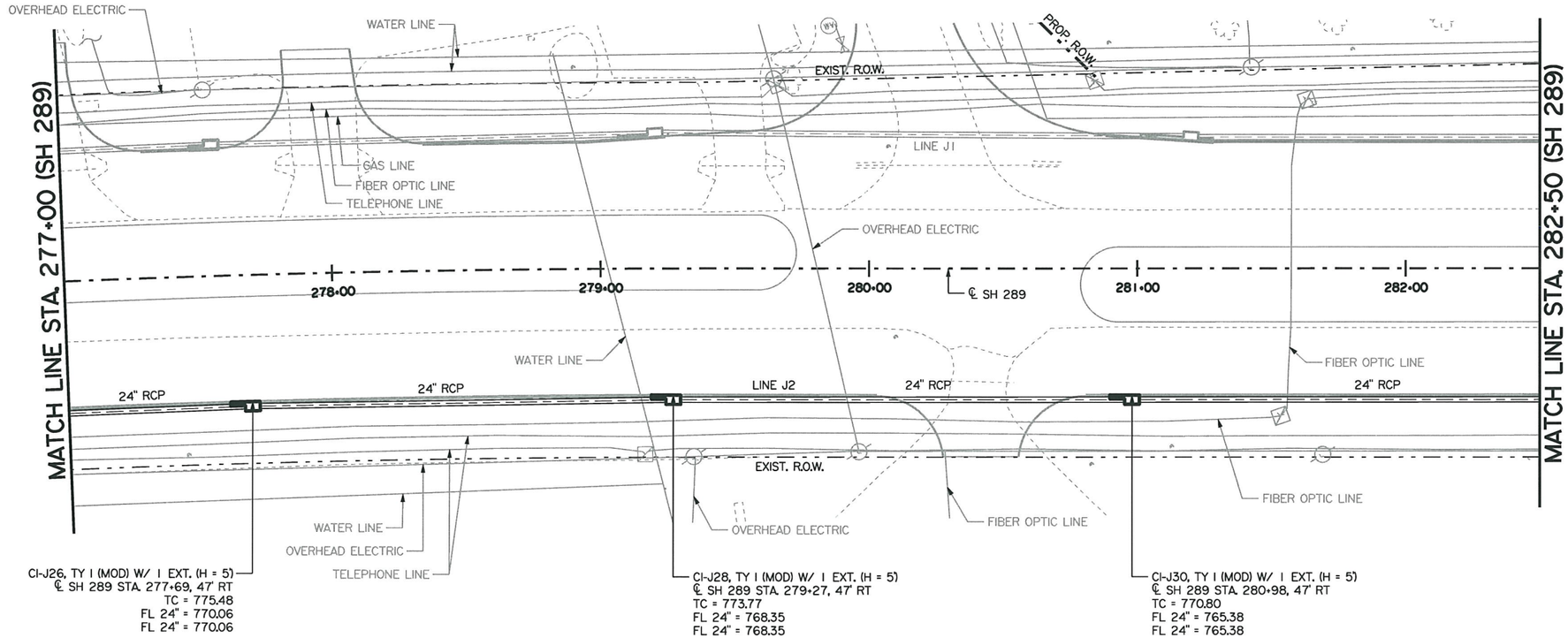

LEGEND

- POWER POLE
- TELEPHONE PEDESTAL
- WATER VALVE
- WM — WATER METER
- FIBER OPTIC VAULT
- GM — GAS METER
- ELECTRIC LIGHT POLE
- WV — WATER VAULT

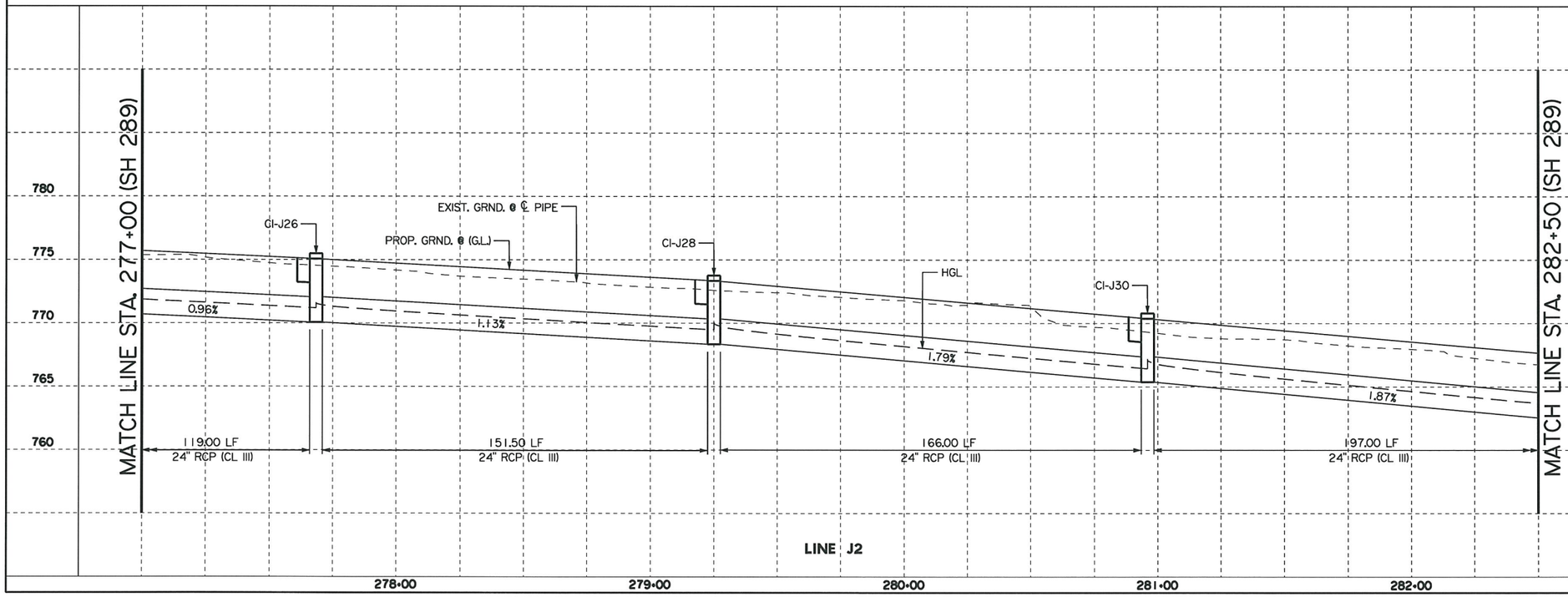

STATE OF TEXAS
HASSAN SAM MOGHADASSI
84231
LICENSED
PROFESSIONAL ENGINEER

H. Moghadassi, P.E. 12/29/11
Signature of Registrant & Date

Texas Department of Transportation
© 2011

SH 289
DRAINAGE PLAN/PROFILE
LINE J2

SCALE: 1"=50' SHEET 12 OF 16

DESIGN	FED. RD. DIV. NO.	STATE PROJECT NO.		HIGHWAY NO.
SHM	6	SEE TITLE SHEET		SH 289
GRAPHICS	STATE	DISTRICT	COUNTY	SHEET NO.
WAV	TEXAS	18	COLLIN	
CHECK	CONTROL	SECTION	JOB	271
CHECK	0091	03	021	

P-201107-01

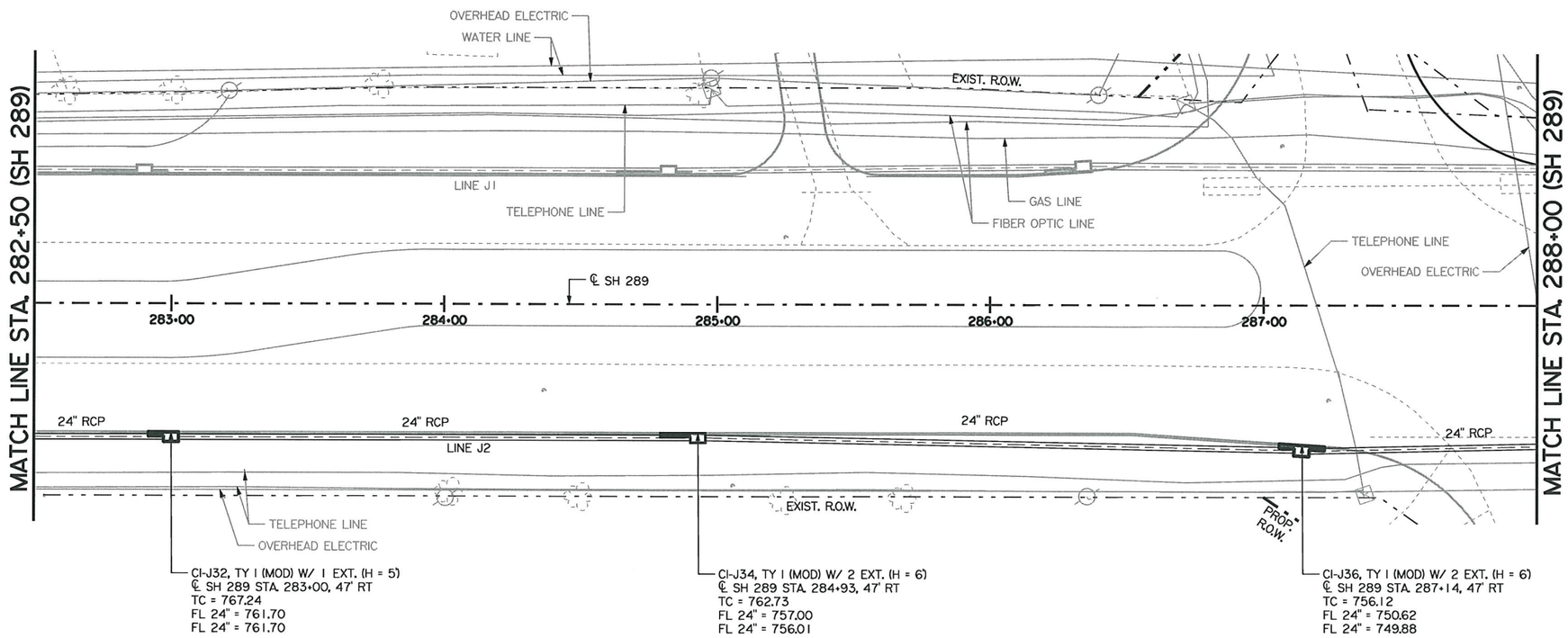

LEGEND

POWER POLE

TELEPHONE PEDESTAL

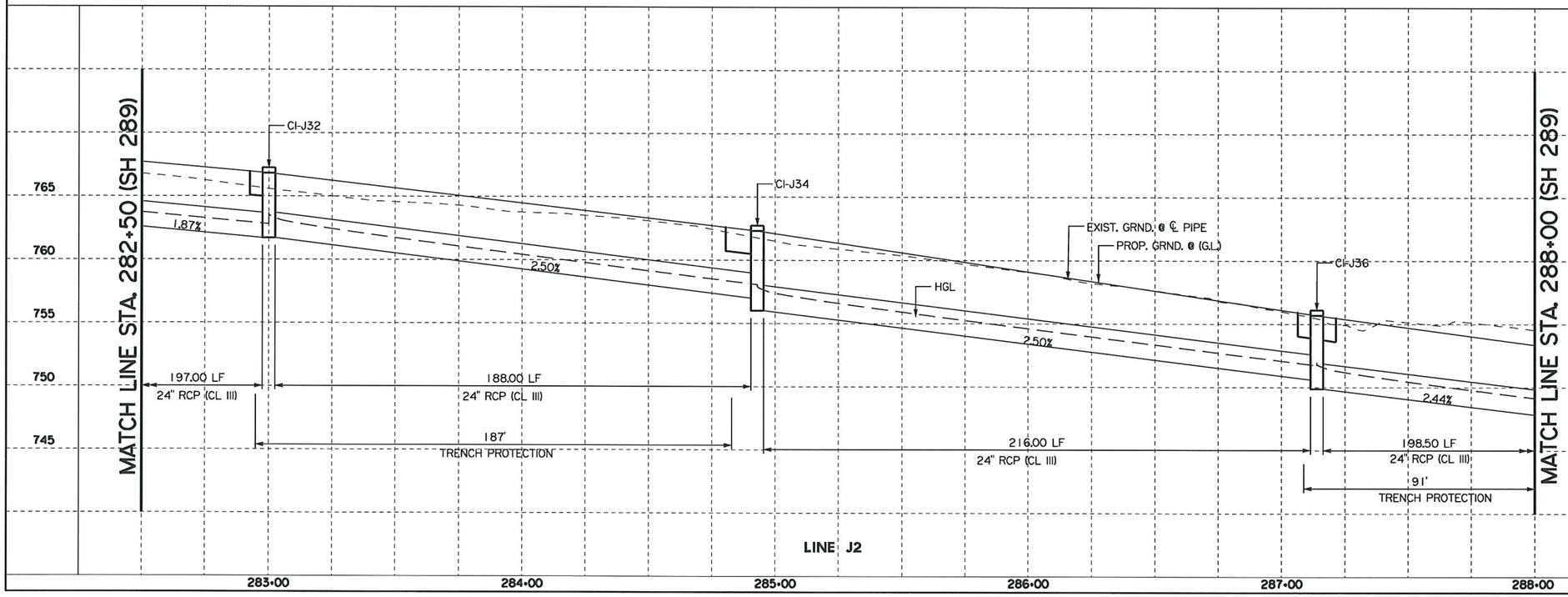

STATE OF TEXAS
HASSAN SAM MOGHADASSI
84231
LICENSED PROFESSIONAL ENGINEER

H. Moghadassi, P.E. 09/12/11
Signature of Registrant & Date

Texas Department of Transportation
© 2011

SH 289 DRAINAGE PLAN/PROFILE LINE J2

SCALE: 1"=50'

SHEET 13 OF 16

DESIGN	FED. RD. DIV. NO.	STATE PROJECT NO.		HIGHWAY NO.
SHM	6	SEE TITLE SHEET		SH 289
GRAPHICS	STATE	DISTRICT	COUNTY	SHEET NO.
WAV	TEXAS	18	COLLIN	272
CHECK	CONTROL	SECTION	JOB	
CHECK	0091	03	021	

P-201107-01

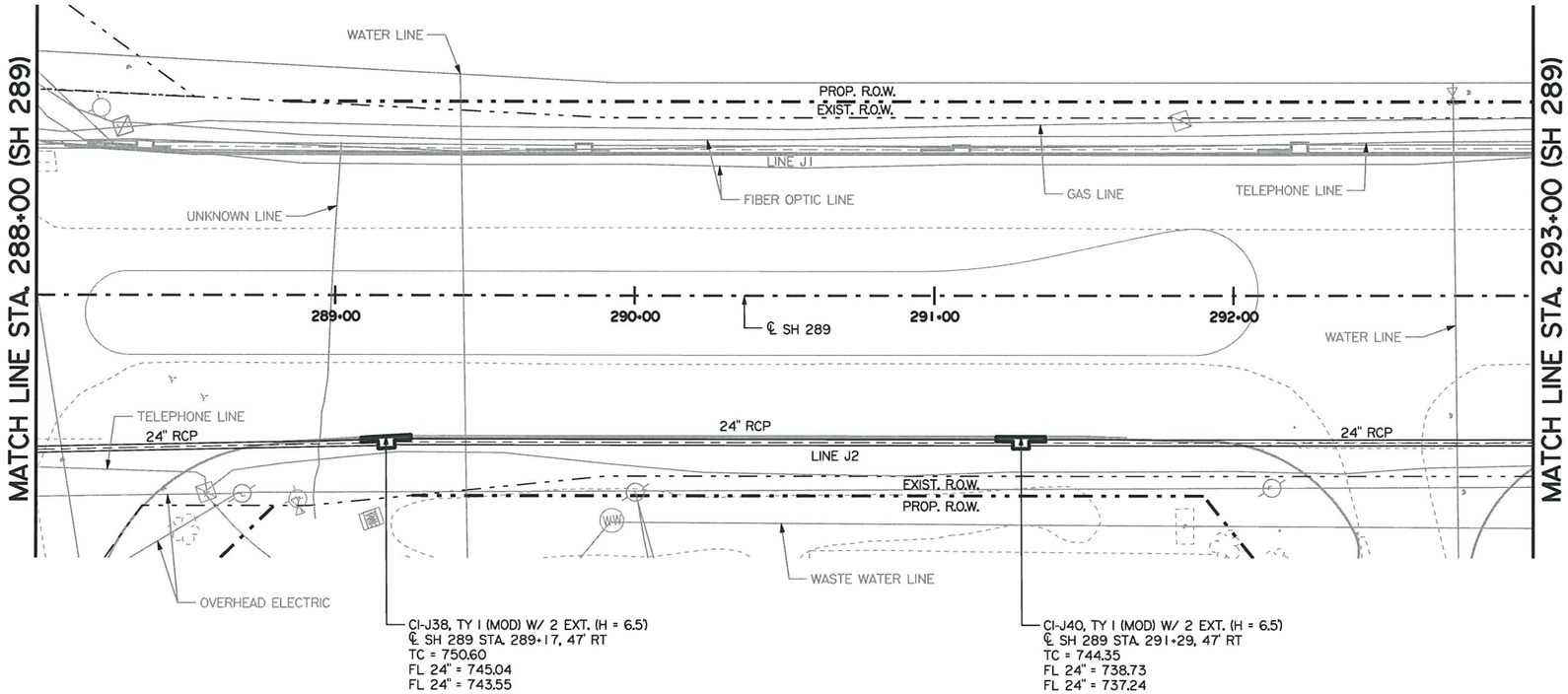

LEGEND

- POWER POLE
- TELEPHONE PEDESTAL
- WATER VALVE
- WM WATER METER
- FIRE HYDRANT
- FIBER OPTIC VAULT

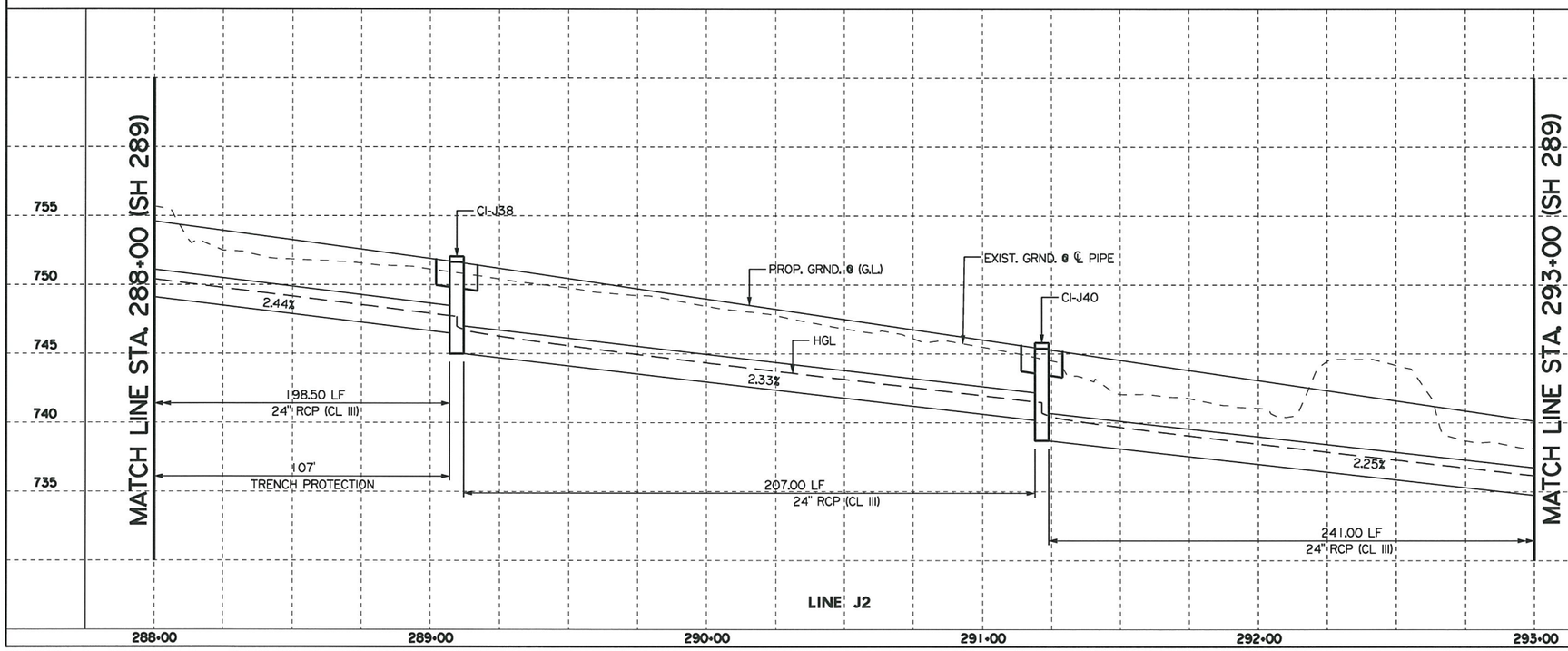

H. Moghadassi, P.E. 12-29-11
Signature of Registrant & Date

Texas Department of Transportation
© 2011

SH 289 DRAINAGE PLAN/PROFILE LINE J2

SCALE: 1"=50' SHEET 14 OF 16

DESIGN	FED. RD. DIV. NO.	STATE PROJECT NO.		HIGHWAY NO.
SHM	6	SEE TITLE SHEET		SH 289
GRAPHICS	STATE	DISTRICT	COUNTY	SHEET NO.
WAV	TEXAS	18	COLLIN	
CHECK	CONTROL	SECTION	JOB	273
CHECK	0091	03	021	

P-201107-01

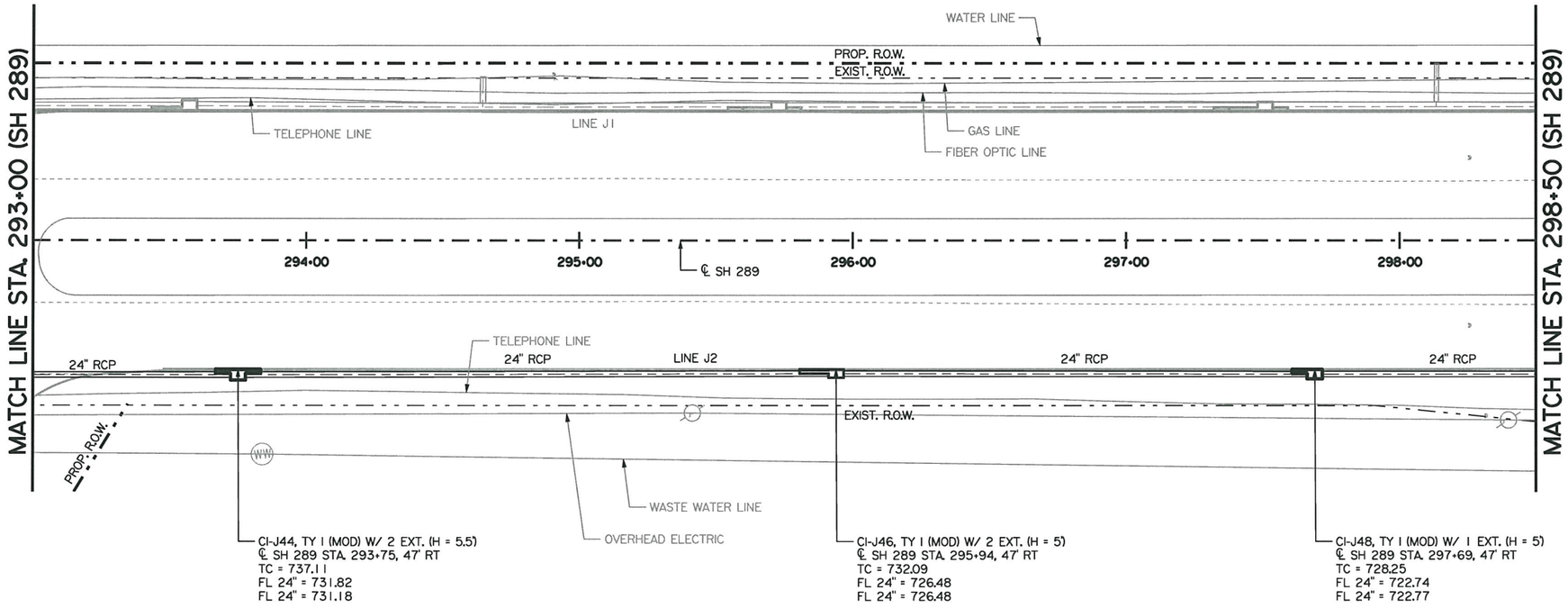

LEGEND

POWER POLE

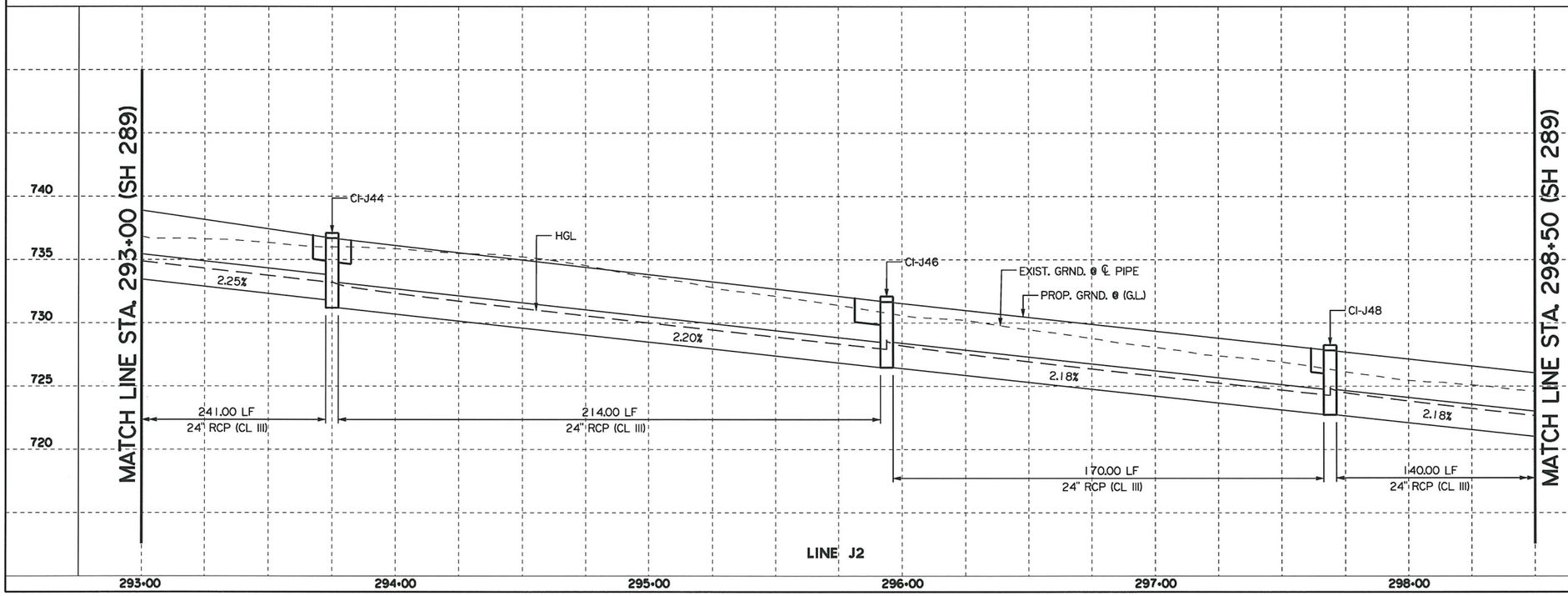

STATE OF TEXAS
HASSAN SAM MOGHADASSI
84231
LICENSED PROFESSIONAL ENGINEER

H. Moghadassi, P.E. 12/29/11
Signature of Registrant & Date

Texas Department of Transportation
© 2011

SH 289
DRAINAGE PLAN/PROFILE
LINE J2

SCALE: 1"=50'

SHEET 15 OF 16

DESIGN	FED. RD. DIV. NO.	STATE PROJECT NO.		HIGHWAY NO.
SHM	6	SEE TITLE SHEET		SH 289
GRAPHICS	STATE	DISTRICT	COUNTY	SHEET NO.
WAV	TEXAS	18	COLLIN	
CHECK	CONTROL	SECTION	JOB	274
CHECK	0091	03	021	

P-201107-01

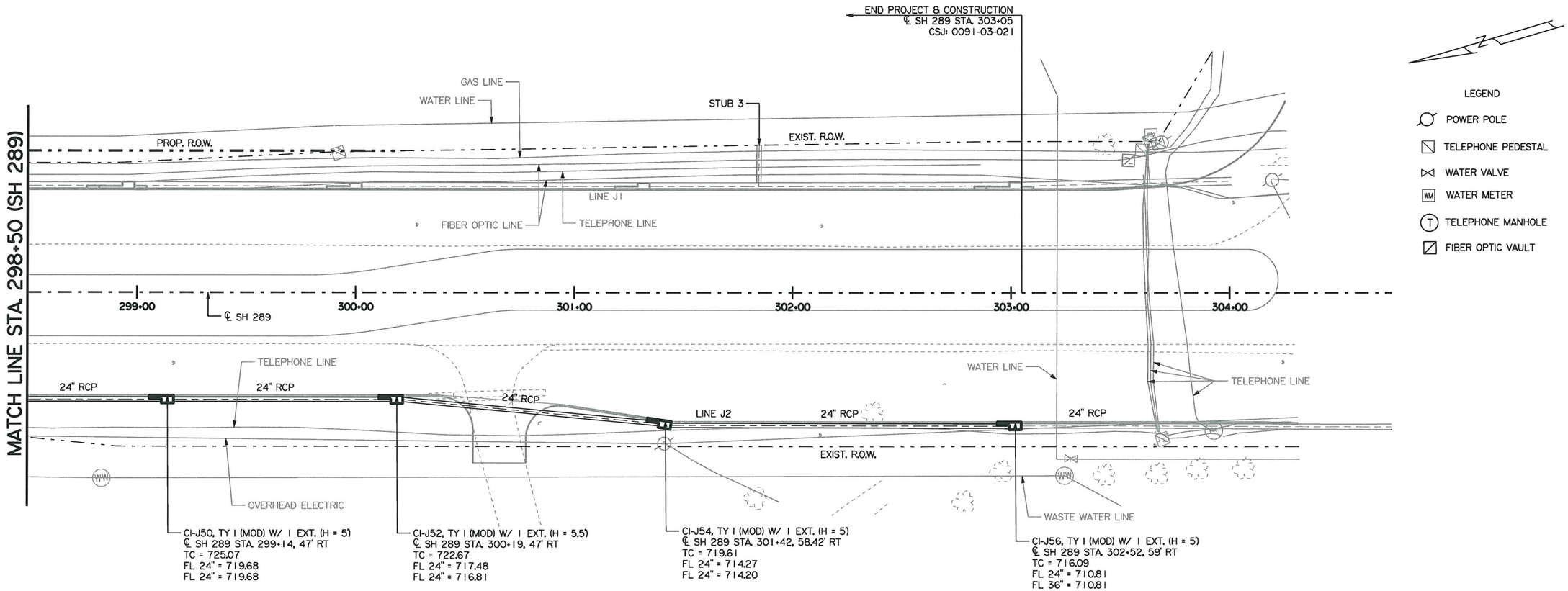

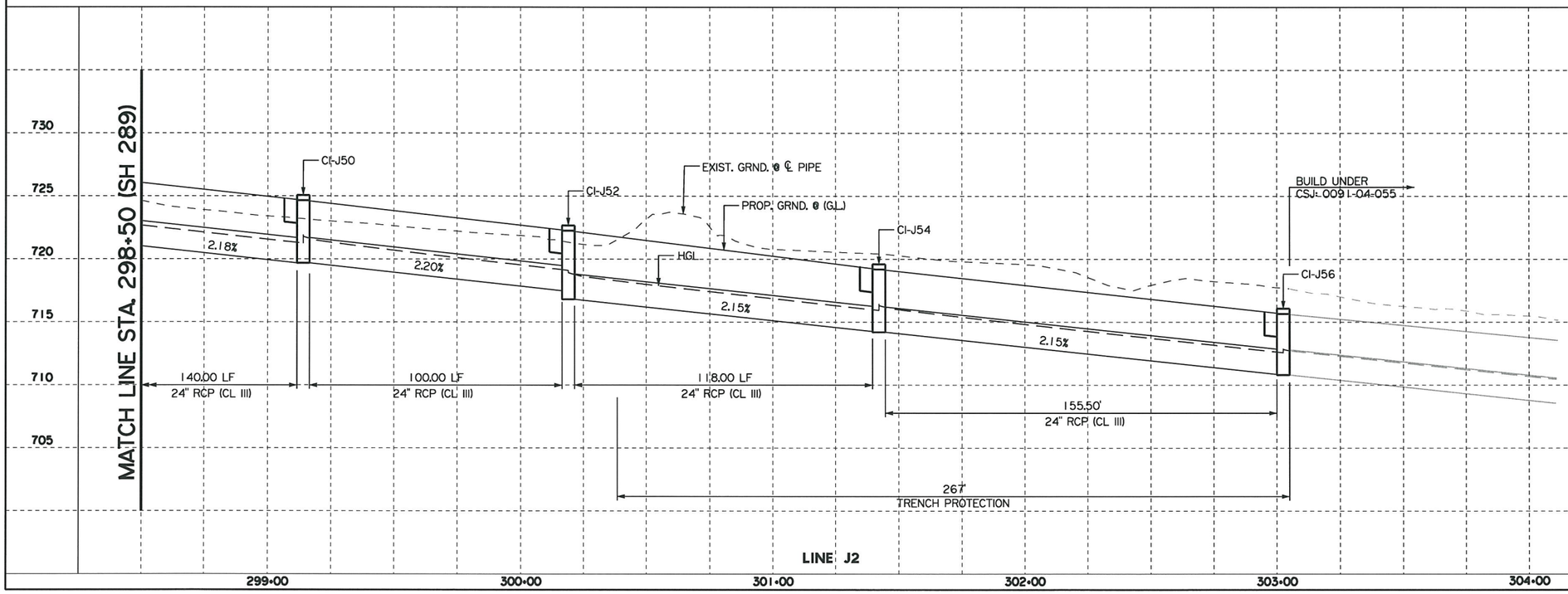

STATE OF TEXAS
HASSAN SAM MOGHADASSI
84231
LICENSED
PROFESSIONAL ENGINEER

H. Moghadassi, P.E. 12/29/11
Signature of Registrant & Date

Texas Department of Transportation
© 2011

SH 289
DRAINAGE PLAN/PROFILE
LINE J2

SCALE: 1"=50' SHEET 16 OF 16

DESIGN	FED. RD. DIV. NO.	STATE PROJECT NO.		HIGHWAY NO.
SHM	6	SEE TITLE SHEET		SH 289
GRAPHICS	STATE	DISTRICT	COUNTY	SHEET NO.
WAV	TEXAS	18	COLLIN	
CHECK	CONTROL	SECTION	JOB	275
CHECK	0091	03	021	

P-201107-01

TXDOT
20.0000 ft / IN.

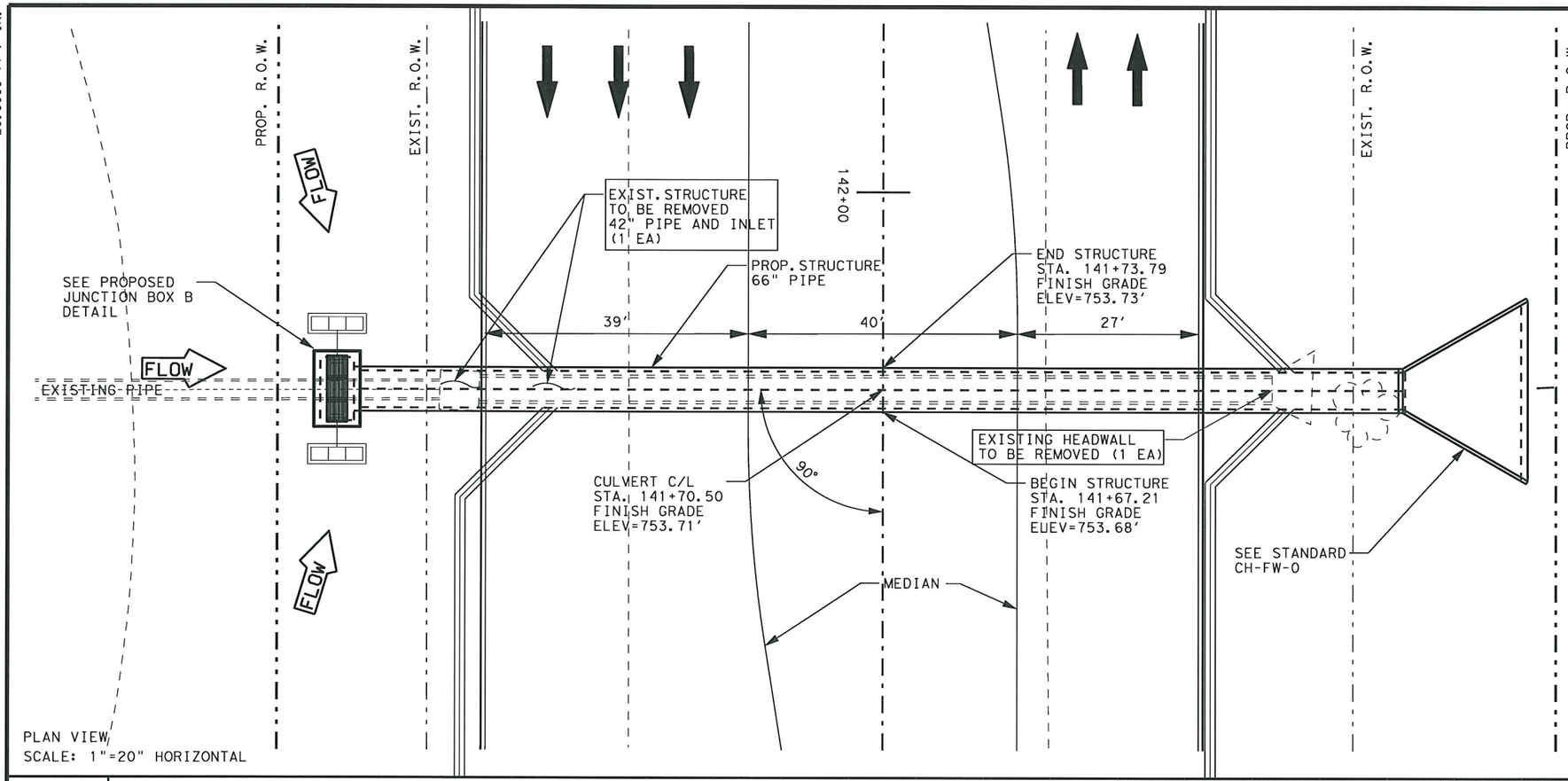

PLAN VIEW
SCALE: 1"=20" HORIZONTAL

PROPOSED HYDRAULIC DATA - DRAINAGE AREA = 23.80 ACRES			
25 YR Culvert Output		100 YR Culvert Output	
Q CulvGroup (CFS)	98.00	Q CulvGroup (CFS)	120.70
# Barrels (66")	1.00	# Barrels (66")	1.00
Q Barrels (cfs)	98.00	Q Barrels (cfs)	120.70
VEL (FPS)	9.36	VEL (FPS)	9.81
WS US (ft)	744.18	WS US (ft)	744.68
WS DS (ft)	740.98	WS DS (ft)	741.15

REQUIRED STANDARDS:

1. CH-FW-0: CONCRETE HEADWALLS WITH FLARED WINGS FOR 0° SKEW PIPE CULVERTS.
2. SEE PROPOSED JUNCTION BOX B DETAIL.

TABLE OF QUANTITIES

BID ITEMS	DESCRIPTION	QUANTITY	UNIT
402-2001	TRENCH EXCAVATION PROTECTION	156.00	FT
464-2014	RC PIPE (CL III) (66 IN)	156.00	FT
465-2211	JUNCTION BOX (SPL)	1.00	EA
466-2074	HEADWALL (CH-FW-0)(DIA= 66 IN)	1.00	EA
496-2002	REMOV STR (INLET)	1.00	EA
496-2006	REMOV STR (HEADWALL)	1.00	EA
496-2007	REMOV STR (PIPE)	1.00	EA

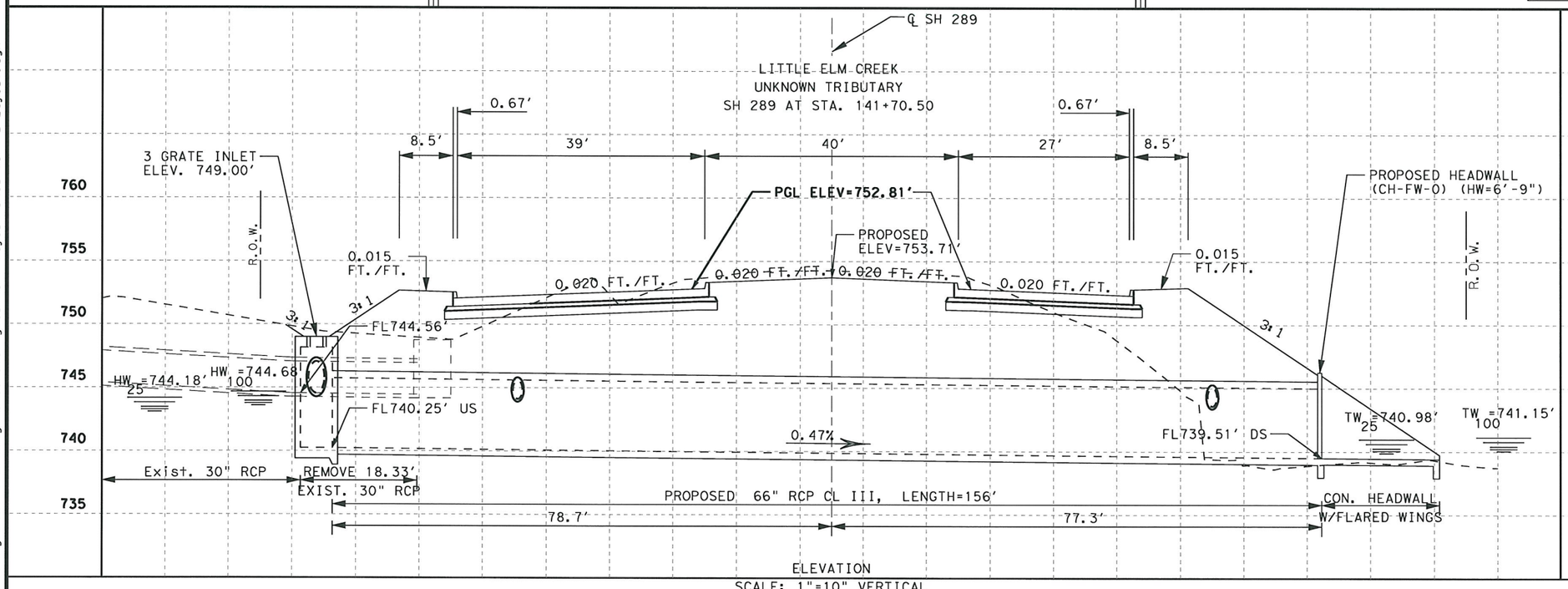

ELEVATION
SCALE: 1"=10" VERTICAL

STATE OF TEXAS
CHRISTOPHER P. ROCHA
107690
LICENSED
PROFESSIONAL ENGINEER

Chris Rocha, P.E. 7/13/11
Signature of Registrant & Date

Culvert B Layout.dgn

Texas Department of Transportation
© 2011

SH 289
CULVERT "B" LAYOUT
LITTLE ELM CREEK
UNKNOWN TRIBUTARY

SCALE: 1"= 20 H
1"= 20 V

Sheet 1 of 2

DESIGN	FED.RD. DIV.NO.	STATE PROJECT NO.		HIGHWAY NO.
CR	6	SEE TITLE SHEET		SH 289
GRAPHICS	STATE	DISTRICT	COUNTY	SHEET NO.
CR	TEXAS	DALLAS	COLLIN	
CHECK	CONTROL	SECTION	JOB	276
SM	0091	03	P-201107-01	
CHECK				

...\Culvert B Layout.dgn

7/11/2011
I:\dal\dgn*sh289\design\sheets\drng\culvert layout b\Culvert B Layout.dgn

TXDOT
20.0000 ft / IN.

HY - 8 CULVERT ANALYSIS REPORT

Table 1 - Summary of Culvert Flows at Crossing: Culvert B

Headwater Elevation (ft)	Total Discharge (cfs)	141+70.50 Discharge (cfs)	Roadway Discharge (cfs)	Iterations
743.49	70.90	70.90	0.00	1
743.63	75.88	75.88	0.00	1
743.76	80.86	80.86	0.00	1
743.89	85.84	85.84	0.00	1
744.01	90.82	90.82	0.00	1
744.13	95.80	95.80	0.00	1
744.18	98.00	98.00	0.00	1
744.35	105.76	105.76	0.00	1
744.46	110.74	110.74	0.00	1
744.57	115.72	115.72	0.00	1
744.68	120.70	120.70	0.00	1
753.71	396.03	396.03	0.00	Overtopping

Table 2 - Culvert Summary Table: 141+70.50

Total Discharge (cfs)	Culvert Discharge (cfs)	Headwater Elevation (ft)	Inlet Control Depth (ft)	Outlet Control Depth (ft)	Flow Type	Normal Depth (ft)	Critical Depth (ft)	Outlet Depth (ft)	Tailwater Depth (ft)	Outlet Velocity (ft/s)	Tailwater Velocity (ft/s)
70.90	70.90	743.49	3.242	0.509	1-S2n	2.079	2.300	2.090	1.249	8.543	5.827
75.88	75.88	743.63	3.378	0.553	1-S2n	2.163	2.380	2.170	1.293	8.706	5.943
80.86	80.86	743.76	3.509	0.596	1-S2n	2.240	2.459	2.243	1.336	8.885	6.051
85.84	85.84	743.89	3.635	0.637	1-S2n	2.313	2.539	2.329	1.377	8.962	6.151
90.82	90.82	744.01	3.757	0.678	1-S2n	2.385	2.618	2.388	1.418	9.171	6.245
95.80	95.80	744.13	3.876	0.717	1-S2n	2.458	2.698	2.458	1.457	9.316	6.341
98.00	98.00	744.18	3.927	0.734	1-S2n	2.490	2.733	2.493	1.474	9.356	6.379
105.76	105.76	744.35	4.104	0.792	1-S2n	2.603	2.839	2.608	1.532	9.524	6.515
110.74	110.74	744.46	4.214	0.829	1-S2n	2.675	2.905	2.675	1.569	9.653	6.595
115.72	115.72	744.57	4.322	0.863	1-S2n	2.748	2.972	2.751	1.603	9.738	6.679
120.70	120.70	744.68	4.430	0.897	1-S2n	2.817	3.038	2.828	1.637	9.808	6.756

****

Inlet Elevation (invert): 740.25 ft, Outlet Elevation (invert): 739.51 ft

Culvert Length: 156.00 ft, Culvert Slope: 0.0047

****

Table 3 - Downstream Channel Rating Curve (Crossing: Culvert B)

Flow (cfs)	Water Surface Elev (ft)	Depth (ft)	Velocity (ft/s)	Shear (psf)	Froude Number
70.90	740.76	1.25	5.83	1.56	1.08
75.88	740.80	1.29	5.94	1.61	1.09
80.86	740.85	1.34	6.05	1.67	1.09
85.84	740.89	1.38	6.15	1.72	1.10
90.82	740.93	1.42	6.24	1.77	1.10
95.80	740.97	1.46	6.34	1.82	1.10
98.00	740.98	1.47	6.38	1.84	1.11
105.76	741.04	1.53	6.52	1.91	1.11
110.74	741.08	1.57	6.59	1.96	1.11
115.72	741.11	1.60	6.68	2.00	1.12
120.70	741.15	1.64	6.76	2.04	1.12

Tailwater Channel Data - Culvert B

Tailwater Channel Option: Trapezoidal Channel
Bottom Width: 6.00 ft
Side Slope (H:V): 3.00 (_:1)
Channel Slope: 0.0200
Channel Manning's n: 0.0330
Channel Invert Elevation: 739.51 ft

Rating Curve Plot for Crossing: Culvert B

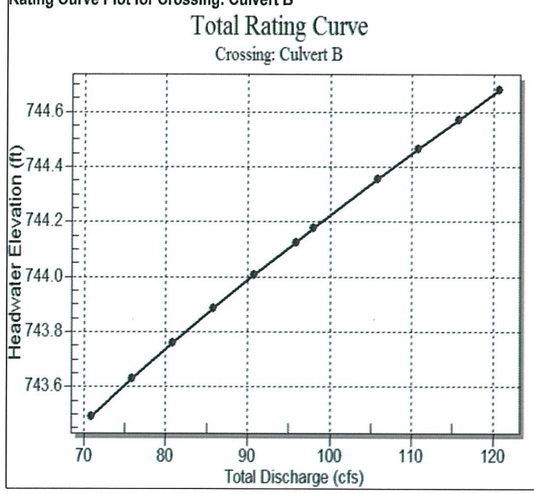

Water Surface Profile Plot for Culvert: 141+70.50

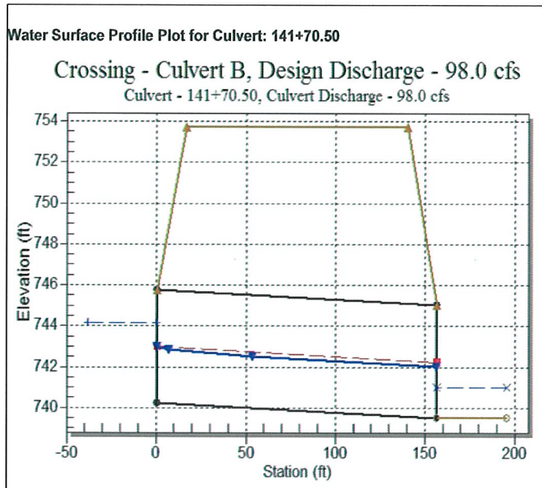

Tailwater Rating Curve Plot for Crossing: Culvert B

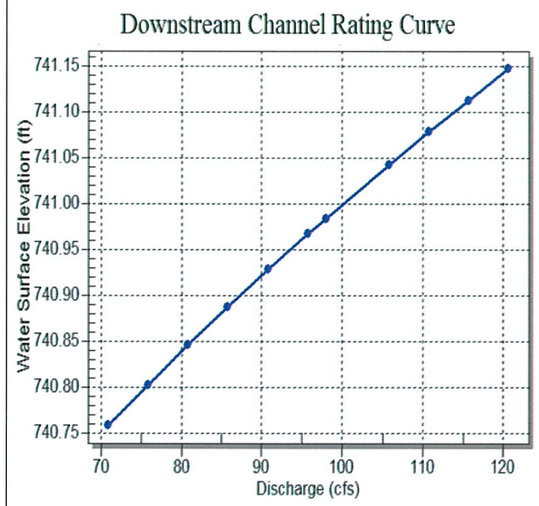

Culvert Performance Curve Plot: 141+70.50

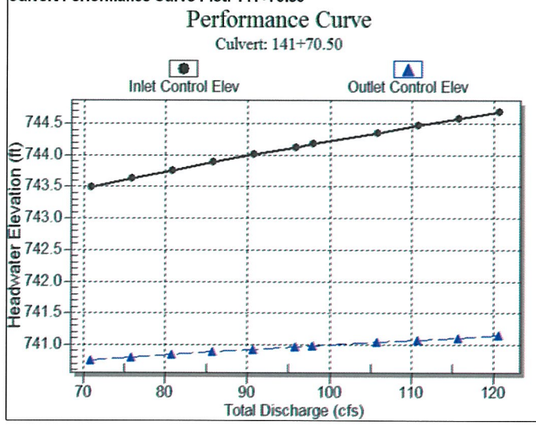

Site Data - 141+70.50

Site Data Option: Culvert Invert Data
Inlet Station: 0.00 ft
Inlet Elevation: 740.25 ft
Outlet Station: 156.00 ft
Outlet Elevation: 739.51 ft
Number of Barrels: 1

Culvert Data Summary - 141+70.50

Barrel Shape: Circular
Barrel Diameter: 5.50 ft
Barrel Material: Concrete
Embedment: 0.00 in
Barrel Manning's n: 0.0130
Inlet Type: Conventional
Inlet Edge Condition: Beveled Edge (1:1)
Inlet Depression: None

Roadway Data for Crossing: Culvert B

Roadway Profile Shape: Constant Roadway Elevation
Crest Length: 50.00 ft
Crest Elevation: 753.71 ft
Roadway Surface: Paved
Roadway Top Width: 124.00 ft

STATE OF TEXAS
CHRISTOPHER P. ROCHA
107690
LICENSED
PROFESSIONAL ENGINEER

Chris Rocha, P.E. 7/13/11
Signature of Registrant & Date

Culvert B Layout.dgn

Texas Department of Transportation
© 2010

SH 289
CULVERT B LAYOUT
DRAINAGE CALCULATIONS

Sheet 2 of 2

DESIGN	FED.RD. DIV.NO.	FEDERAL AID PROJECT NO.		HIGHWAY NO.
CR	6	SEE TITLE SHEET		SH 289
GRAPHICS CR	STATE	DISTRICT	COUNTY	SHEET NO.
CHECK SM	TEXAS	DALLAS	COLLIN	277
CHECK	CONTROL	SECTION	JOB	
	0091	03	22	

P-201107-01

...\Culvert B Layout.dgn

7/11/2011
t:\dal\dgn*s\sh289\design\sheets\drng\culvert layout b\Culvert B Layout.dgn

TXDOT
20.0000 ft / IN.

SEE P/P FOR FOR RIPRAP LIMITS & QUANTITY

PROPOSED WINGWALL (PW)

Sta. 162+29.19
Offset: 65.79'LT

EXISTING WINGWALL TO BE REMOVED (2 EA)

FLOW

6+00

EXIST. & PROP. R.O.W.

Sta. 161+24.67
Offset: 65.79'LT

162+00

27'

40'
MEDIAN

27'

EXIST. STRUCTURE TO BE REMOVED 6.5'x5' SBC

END STRUCTURE
STA. 161+58.19
FINISH GRADE
ELEV=729.20'

PROP. STRUCTURE 2-5'x5' SBC

21'

21'

5+00

90°

CULVERT C/L
STA. 161+51.94
FINISH GRADE
ELEV=729.28'

BEGIN STRUCTURE
STA. 161+45.69
FINISH GRADE
ELEV=729.36'

MEDIAN

161+00

EXISTING WINGWALL TO BE REMOVED (1 EA)

EXIST. R.O.W.

PROP. R.O.W.

Sta. 161+85.19
Offset: 71.12'RT

Sta. 161+85.19
Offset: 86.12'RT

27'

27'

27'

ITEM: 459-2011
(SY)
GABION MATTRESSES
(GALV) (12IN)

110.83

4+00 FLOW

Sta. 161+18.69
Offset: 86.12'RT

Sta. 161+18.69
Offset: 71.12'RT

PROPOSED WINGWALL (PW)

EXISTING WINGWALL TO BE REMOVED (1 EA)

PLAN VIEW
SCALE: 1"=20' HORIZONTAL

PROPOSED HYDRAULIC DATA - DRAINAGE AREA = 76.41 ACRES			
25 YR Culvert Output		100 YR Culvert Output	
Q CulvGroup (CFS)	201.30	Q CulvGroup (CFS)	248.10
# Barrels (5'x5')	2.00	# Barrels (5'x5')	2.00
Q Barrels (cfs)	100.65	Q Barrels (cfs)	124.05
VEL (FPS)	12.03	VEL (FPS)	12.68
WS US (ft)	722.20	WS US (ft)	722.74
WS DS (ft)	719.72	WS DS (ft)	720.01

REQUIRED STANDARDS:
1. PW: PARALLEL WINGS SKEWED/NON SKEWED
2. SCP-5: SINGLE BOX CULVERTS PRECAST
3. SCP-MD: PRECAST MISCELLANEOUS DETAILS
4. BCS: SUPPLEMENT WING AND END TREATMENT

TABLE OF QUANTITIES

BID ITEMS	DESCRIPTION	QUANTITY	UNIT
402-2001	TRENCH EXCAVATION PROTECTION	133.00	FT
459-2011	GABION MATTRESS (12") (GALV.)	110.83	SY
462-2009	CONC BOX CULV (5 FT x 5 FT)	266.00	FT
466-2051	WINGWALL (PW) (HW=7'-0")	1.00	EA
466-2053	WINGWALL (PW) (HW=9'-0")	1.00	EA
496-2001	REMOVE STR (BOX CULVERT)	1.00	EA
432-2001	RIPRAP CONC. (4")	0	CY

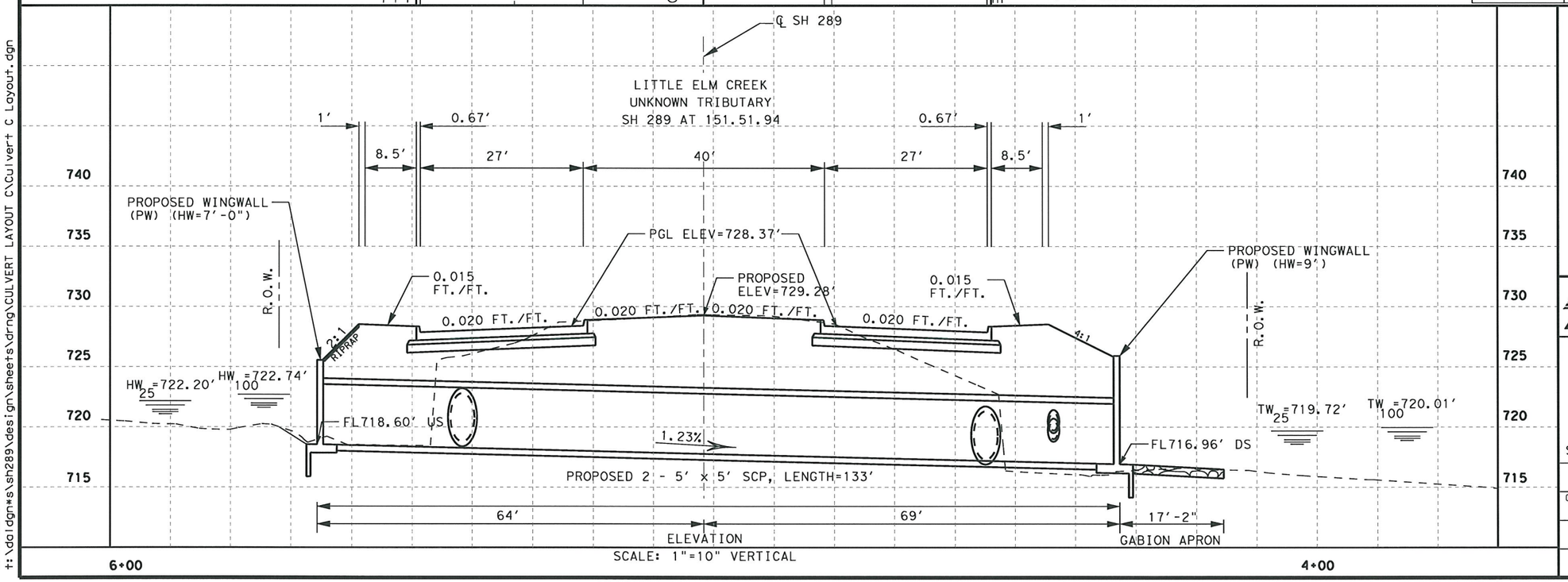

STATE OF TEXAS
CHRISTOPHER P. ROCHA
107690
LICENSED
PROFESSIONAL ENGINEER

Chris Rocha, P.E. 7/13/11
Signature of Registrant & Date

Culvert C Layout.dgn

Texas Department of Transportation
© 2011

SH 289
CULVERT "C" LAYOUT
LITTLE ELM CREEK
UNKNOWN TRIBUTARY

SCALE: 1"= 20 H

Sheet 1 of 3

DESIGN	FED. RD. DIV. NO.	STATE PROJECT NO.		HIGHWAY NO.
CR	6	SEE TITLE SHEET		SH 289
GRAPHICS CR	STATE	DISTRICT	COUNTY	SHEET NO.
CHECK SM	TEXAS	DALLAS	COLLIN	
CHECK	CONTROL	SECTION	JOB	278
	0091	03	P-201107-01	

7/11/2011
t:\dal\dgn*s\sh289\design\sheets\drng\CULVERT LAYOUT C\Culvert C Layout.dgn

...\Culvert C Layout.dgn

TXDOT
20.0000 ft / IN.

HY - 8 CULVERT ANALYSIS REPORT

Table 1 - Summary of Culvert Flows at Crossing: SH289-Culv C (Prop 2-5'x5')

Headwater Elevation (ft)	Total Discharge (cfs)	Culvert STA. at 161+52 Discharge (cfs)	Roadway Discharge (cfs)	Iterations
721.87	173.50	173.50	0.00	1
721.96	180.96	180.96	0.00	1
722.05	188.42	188.42	0.00	1
722.14	195.88	195.88	0.00	1
722.20	201.30	201.30	0.00	1
722.31	210.80	210.80	0.00	1
722.40	218.26	218.26	0.00	1
722.48	225.72	225.72	0.00	1
722.57	233.18	233.18	0.00	1
722.65	240.64	240.64	0.00	1
722.74	248.10	248.10	0.00	1
724.88	434.09	434.09	0.00	Overtopping

Table 2 - Culvert Summary Table: Culvert STA. at 161+52

Total Discharge (cfs)	Culvert Discharge (cfs)	Headwater Elevation (ft)	Inlet Control Depth (ft)	Outlet Control Depth (ft)	Flow Type	Normal Depth (ft)	Critical Depth (ft)	Outlet Depth (ft)	Tailwater Depth (ft)	Outlet Velocity (ft/s)	Tailwater Velocity (ft/s)
173.50	173.50	721.87	3.268	0.0*	1-S2n	1.443	2.111	1.450	2.577	11.965	4.903
180.96	180.96	721.96	3.358	0.0*	1-S2n	1.489	2.171	1.494	2.629	12.108	4.956
188.42	188.42	722.05	3.447	0.0*	1-S2n	1.531	2.230	1.533	2.680	12.287	5.009
195.88	195.88	722.14	3.536	0.0*	1-S2n	1.573	2.289	1.640	2.730	11.944	5.057
201.30	201.30	722.20	3.600	0.0*	1-S2n	1.603	2.331	1.674	2.764	12.025	5.096
210.80	210.80	722.31	3.711	0.0*	1-S2n	1.656	2.404	1.733	2.825	12.166	5.155
218.26	218.26	722.40	3.798	0.0*	1-S2n	1.697	2.460	1.779	2.870	12.268	5.206
225.72	225.72	722.48	3.884	0.0*	1-S2n	1.738	2.516	1.824	2.916	12.376	5.247
233.18	233.18	722.57	3.970	0.0*	1-S2n	1.780	2.571	1.781	2.960	13.093	5.295
240.64	240.64	722.65	4.055	0.0*	1-S2n	1.821	2.626	1.912	3.003	12.589	5.340
248.10	248.10	722.74	4.140	0.0*	1-S2n	1.863	2.680	1.957	3.046	12.680	5.381

* theoretical depth is impractical. Depth reported is corrected.

Inlet Elevation (invert): 718.60 ft, Outlet Elevation (invert): 716.96 ft

Culvert Length: 133.01 ft, Culvert Slope: 0.0123

Table 3 - Downstream Channel Rating Curve (Crossing: SH289-Culv C (Prop 2-5'x5'))

Flow (cfs)	Water Surface Elev (ft)	Depth (ft)	Velocity (ft/s)	Shear (psf)	Froude Number
173.50	719.54	2.58	4.90	1.03	0.67
180.96	719.59	2.63	4.96	1.05	0.67
188.42	719.64	2.68	5.01	1.07	0.68
195.88	719.69	2.73	5.06	1.09	0.68
201.30	719.72	2.76	5.10	1.10	0.68
210.80	719.78	2.82	5.16	1.13	0.68
218.26	719.83	2.87	5.21	1.15	0.68
225.72	719.88	2.92	5.25	1.16	0.68
233.18	719.92	2.96	5.30	1.18	0.69
240.64	719.96	3.00	5.34	1.20	0.69
248.10	720.01	3.05	5.38	1.22	0.69

Tailwater Channel Data - SH289-Culv C (Prop 2-5'x5')

Tailwater Channel Option: Trapezoidal Channel

Bottom Width: 6.00 ft

Side Slope (H:V): 3.00 (_:1)

Channel Slope: 0.0064

Channel Manning's n: 0.0330

Channel Invert Elevation: 716.96 ft

Rating Curve Plot for Crossing: SH289-Culv C (Prop 2-5'x5')

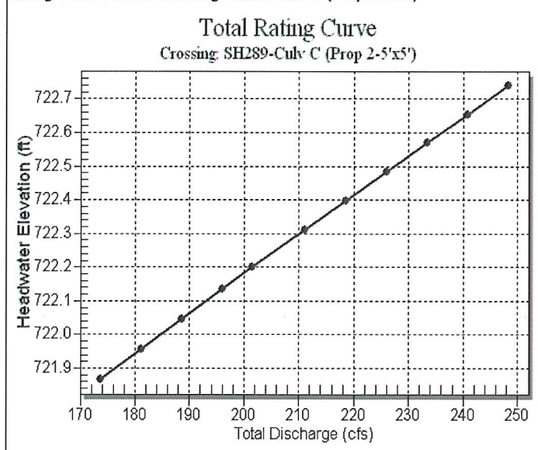

Culvert Notes: Culvert STA. at 161+52

Water Surface Profile Plot for Culvert: Culvert STA. at 161+52

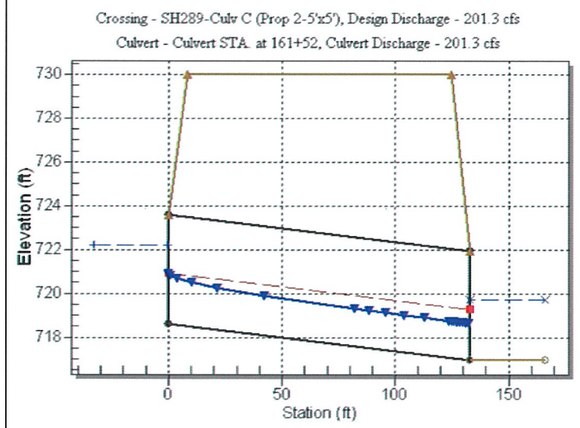

Tailwater Rating Curve Plot for Crossing: SH289-Culv C (Prop 2-5'x5')

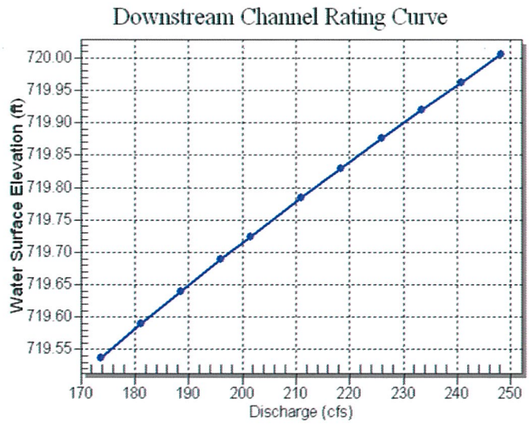

Culvert Performance Curve Plot: Culvert STA. at 161+52

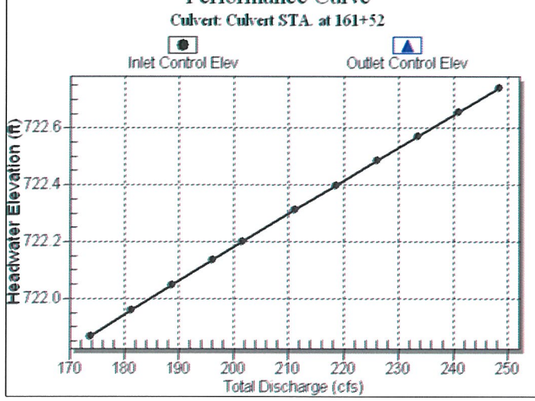

Site Data - Culvert STA. at 161+52

Site Data Option: Culvert Invert Data

Inlet Station: 0.00 ft

Inlet Elevation: 718.60 ft

Outlet Station: 133.00 ft

Outlet Elevation: 716.96 ft

Number of Barrels: 2

Culvert Data Summary - Culvert STA. at 161+52

Barrel Shape: Concrete Box

Barrel Span: 5.00 ft

Barrel Rise: 5.00 ft

Barrel Material: Concrete

Embedment: 0.00 in

Barrel Manning's n: 0.0130

Inlet Type: Conventional

Inlet Edge Condition: 1:1 Bevel Headwall

Inlet Depression: None

Roadway Data for Crossing: SH289-Culv C (Prop 2-5'x5')

Roadway Profile Shape: Irregular Roadway Shape (coordinates)

Irregular Roadway Cross-Section:

Coord No.	Station (ft)	Elevation (ft)
1	-200.00	730.00
2	-100.00	728.69
3	0.00	727.38
4	100.00	726.07
5	200.00	724.88

Roadway Surface: Paved

Roadway Top Width: 116.34 ft

STATE OF TEXAS
CHRISTOPHER P. ROCHA
107690
LICENSED
PROFESSIONAL ENGINEER

Chris Rocha, P.E. 7/13/11
Signature of Registrant & Date

Culvert C Layout.dgn

Texas Department of Transportation
© 2010

SH 289
CULVERT C LAYOUT
DRAINAGE CALCULATIONS

Sheet 2 of 3

DESIGN	FED. RD. DIV. NO.	FEDERAL AID PROJECT NO.		HIGHWAY NO.
CR	6	SEE TITLE SHEET		SH 289
GRAPHICS CR	STATE	DISTRICT	COUNTY	SHEET NO.
CHECK SM	TEXAS	DALLAS	COLLIN	
CHECK	CONTROL	SECTION	JOB	279
	0091	03	P-201107-01	

...\Culvert C Layout.dgn

7/11/2011
t:\dal\dgn\sh289\design\sheets\drng\CULVERT LAYOUT CV\Culvert C Layout.dgn

TXDOT
30.0000 ft / IN.

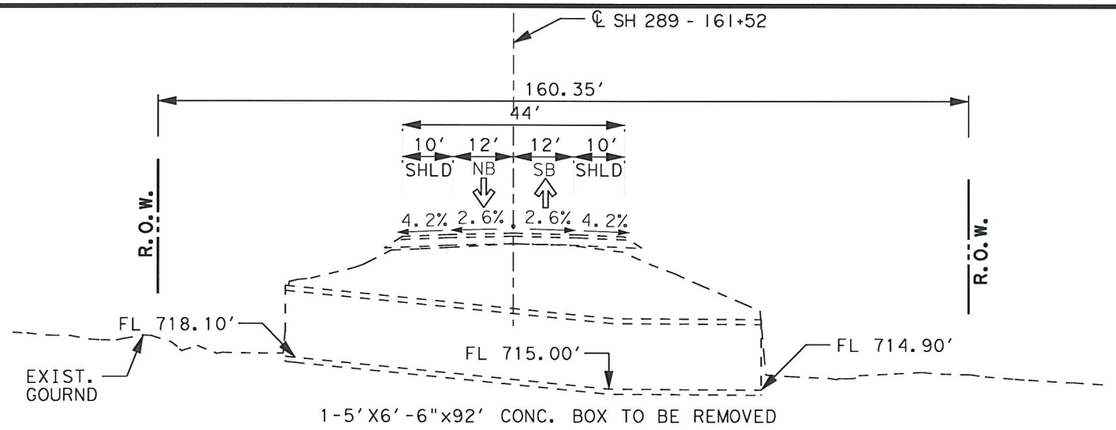

TYPICAL SECTION - EXISTING STRUCTURE

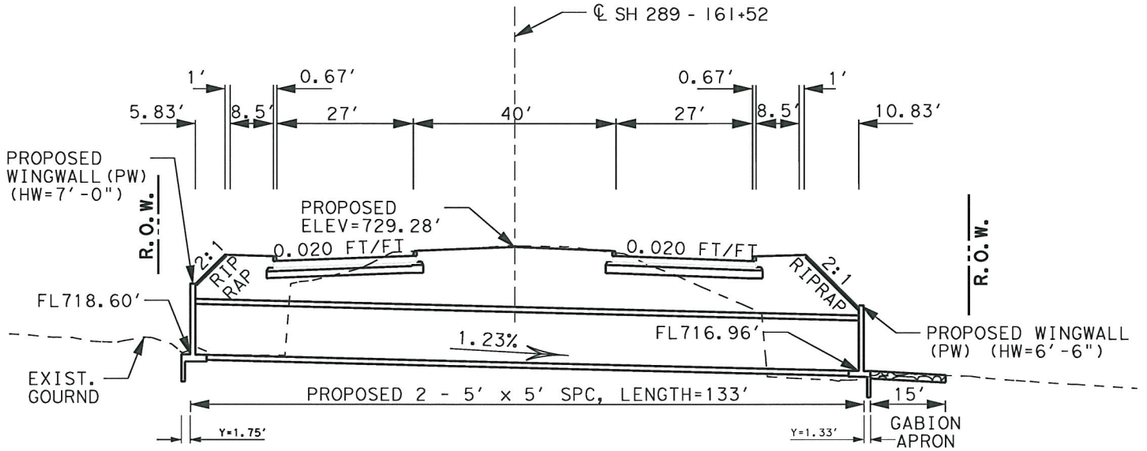

TYPICAL SECTION - COMPLETED STRUCTURE

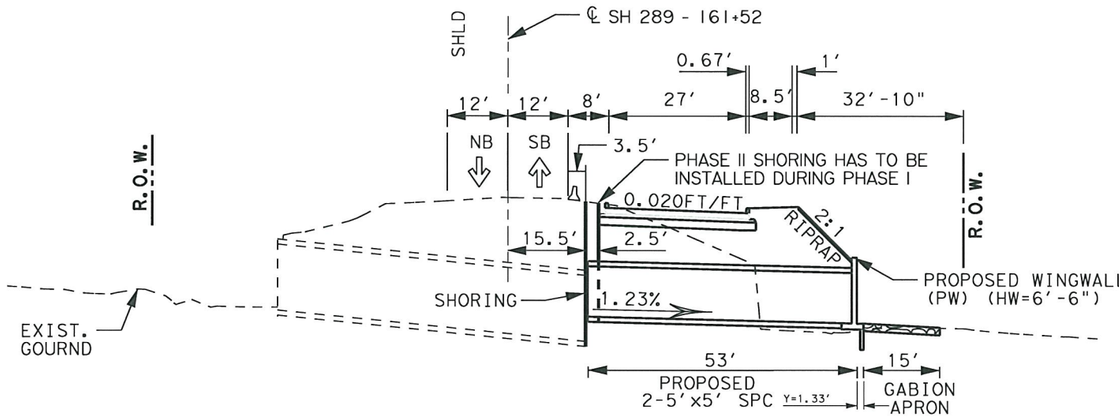

TYPICAL SECTION - PHASE 1 CONSTRUCTION (SOUTH BOUND)

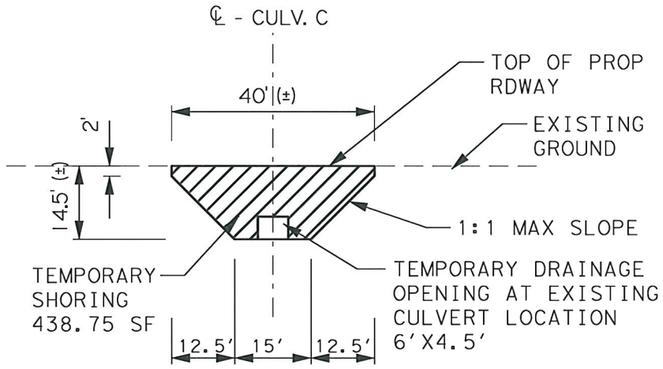

TEMPORARY SHORING PHASE 1

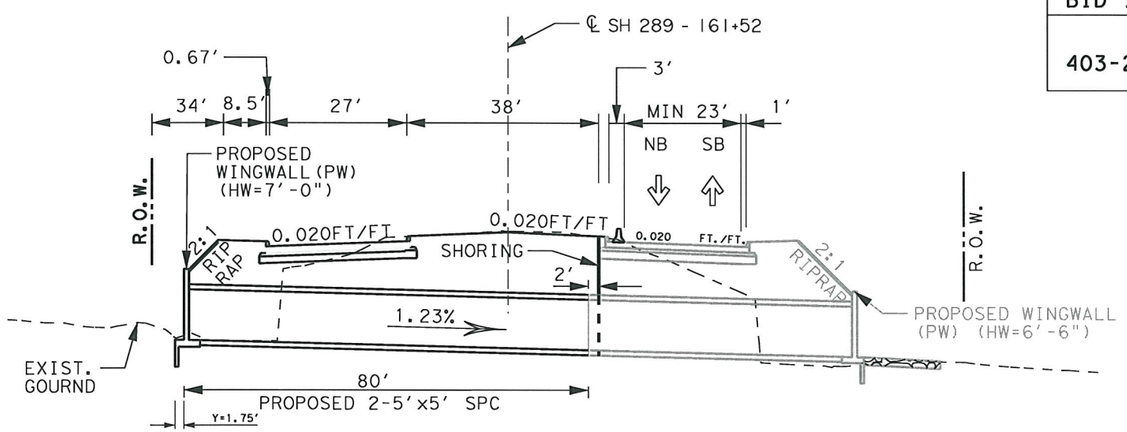

TYPICAL SECTION - PHASE 2 CONSTRUCTION (NORTH BOUND)

TABLE OF QUANTITIES

BID ITEMS	DESCRIPTION	QUANTITY	UNIT
403-2001	TEMPORARY SPL SHORING	700.71	SF

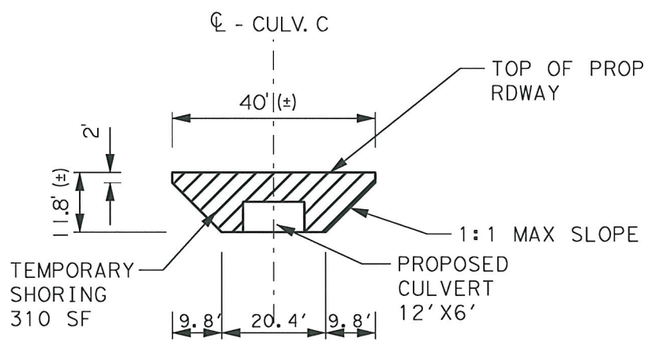

TEMPORARY SHORING PHASE 2

STATE OF TEXAS
HASSAN SAM MOGHADASSI
84231
LICENSED PROFESSIONAL ENGINEER

H. Moghadassi, P.E. 07/12/11
Signature of Registrant & Date

Culvert C Layout.dgn

Texas Department of Transportation
© 2011

SH 289
CULVERT C, UNKNOWN TRIB. LITTLE ELM CREEK PHASE CONSTRUCTION

NOT TO SCALE — Sheet 3 of 3

DESIGN	FED.RD. DIV.NO.	STATE PROJECT NO.		HIGHWAY NO.
OE	6	SEE TITLE SHEET		SH 289
GRAPHICS	STATE	DISTRICT	COUNTY	SHEET NO.
OE	TEXAS	DALLAS	COLLIN	
CHECK	CONTROL	SECTION	JOB	280
SM	0091	03		
CHECK			P-201107-01	

...\Culvert C Layout.dgn

7/11/2011
I:\dal\dgn\s\sh289\design\sheets\drng\CULVERT LAYOUT C\Culvert C Layout.dgn

TXDOT
40.0000 ft / IN.

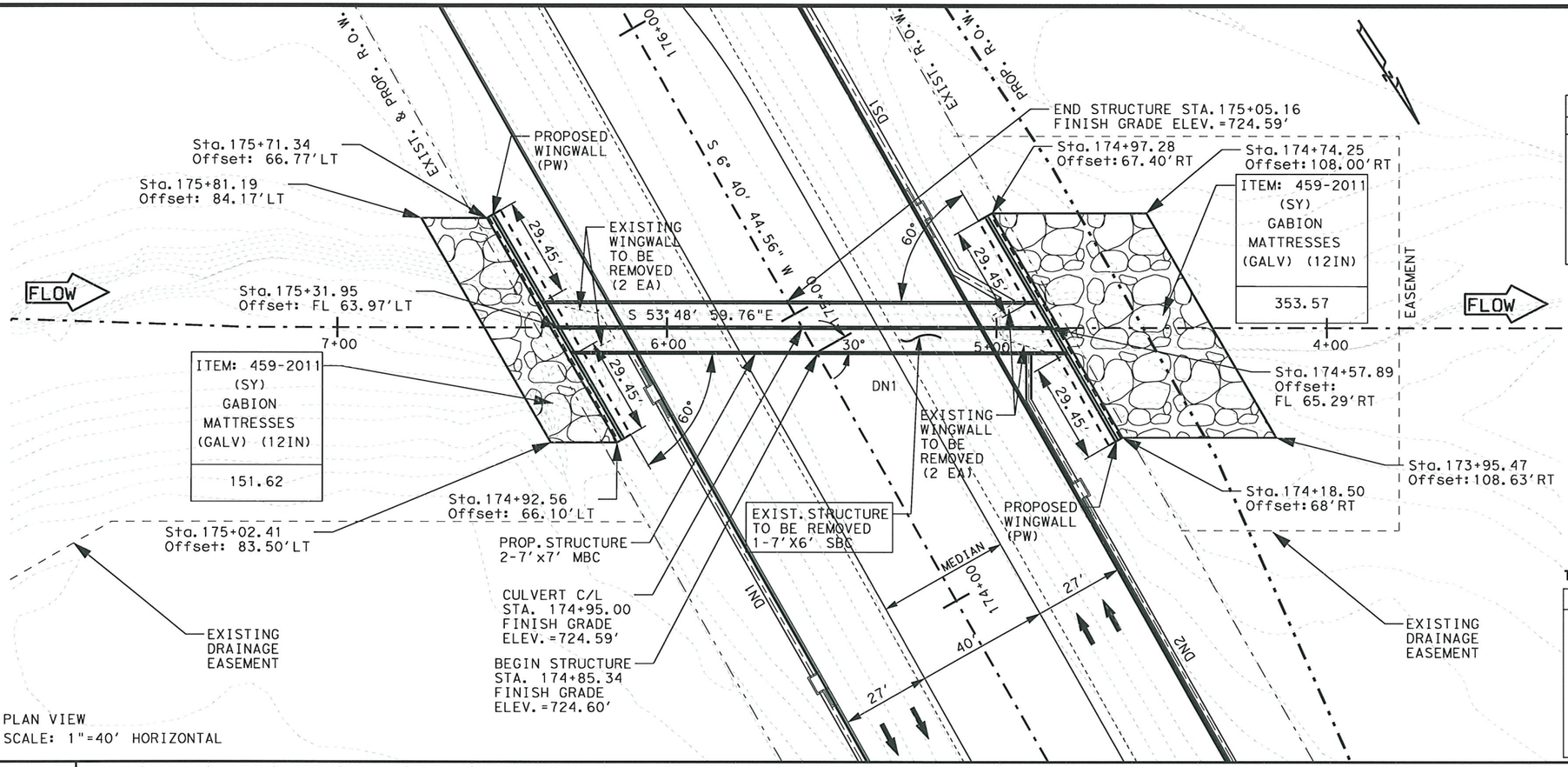

PROPOSED HYDRAULIC DATA - DRAINAGE AREA = 235.34 ACRES			
25 YR Culvert Output		100 YR Culvert Output	
Q CulvGroup (CFS)	688.37	Q CulvGroup (CFS)	881.04
# Barrels (8'x7')	2.00	# Barrels (8'x7')	2.00
Q Barrels (cfs)	344.19	Q Barrels (cfs)	440.52
TW VEL (FPS)	11.96	TW VEL (FPS)	12.77
OUTLET VEL (FPS)	11.63	OUTLET VEL (FPS)	12.63
WS US (ft)	719.16	WS DS (ft)	720.36
WS DS (ft)	715.62	WS DS (ft)	716.11

REQUIRED STANDARDS:

1. PW: PARALLEL WINGS SKEWED/NON SKEWED
2. SCP-7: SINGLE BOX CULVERTS PRECAST
3. SCP-MD: PRECAST MISCELLANEOUS DETAILS
4. BCS: SUPPLEMENT WING AND END TREATMENT

TABLE OF QUANTITIES

BID ITEMS	DESCRIPTION	QUANTITY	UNIT
402-2001	TRENCH EXCAVATION PROTECTION	150.50	FT
459-2011	GABION MATTRESS (12") (GALV.)	505.19	SY
462-2022	CONC BOX CULV (8 FT x 7 FT)	301	FT
466-2288	WINGWALL (PW) (HW=8'-6")	2	EA
496-2001	REMOV STR (BOX CULVERT)	1	EA

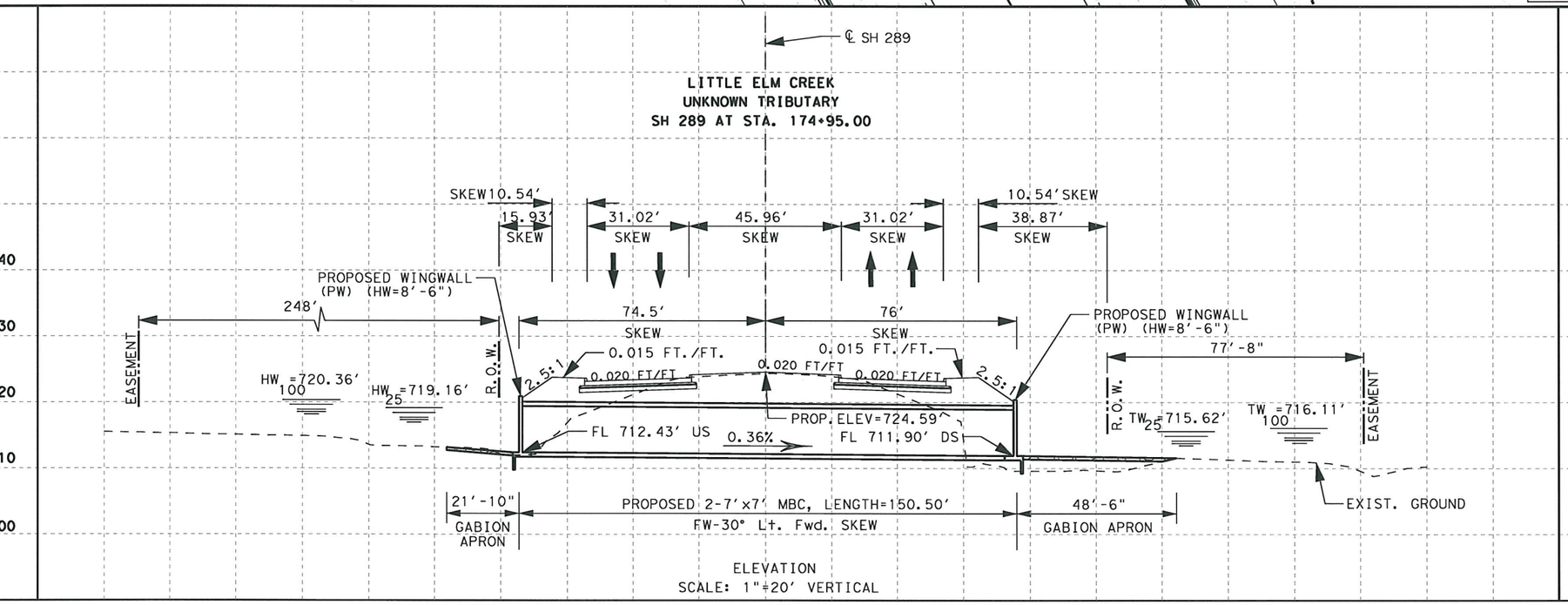

STATE OF TEXAS
HASSAN SAM MOGHADASSI
84231
LICENSED
PROFESSIONAL ENGINEER

H.S. Moghadassi ,P.E. 07.12.11
Signature of Registrant & Date

Culvert D Layout.dgn

Texas Department of Transportation
© 2011

SH 289
CULVERT "D" LAYOUT
LITTLE ELM CREEK
UNKNOWN TRIBUTARY

SCALE: 1"= 40' H Sheet 1 of 3

DESIGN	FED.RD. DIV.NO.	STATE PROJECT NO.		HIGHWAY NO.
OE	6	SEE TITLE SHEET		SH 289
GRAPHICS	STATE	DISTRICT	COUNTY	SHEET NO.
OE	TEXAS	DALLAS	COLLIN	
CHECK	CONTROL	SECTION	JOB	281
SM	0091	03	22	
CHECK				

P-201107-01

...\Culvert D Layout.dgn

7/11/2011
t:\dal\dgn*s\sh289\design\sheets\drng\CULVERT LAYOUT D\Culvert D Layout.dgn

TXDOT
20.0000 ft / IN.

HY - 8 CULVERT ANALYSIS REPORT

Table 1 - Summary of Culvert Flows at Crossing:

SH289-Culv D (Prop 2-7'x7' SBC)

Headwater Elevation (ft)	Total Discharge (cfs)	Culvert STA. at 174+95 Discharge (cfs)	Roadway Discharge (cfs)	Iterations
718.39	574.33	574.33	0.00	1
718.60	605.00	605.00	0.00	1
718.81	635.67	635.67	0.00	1
719.01	666.34	666.34	0.00	1
719.16	688.37	688.37	0.00	1
719.41	727.68	727.68	0.00	1
719.61	758.36	758.36	0.00	1
719.80	789.03	789.03	0.00	1
719.99	819.70	819.70	0.00	1
720.18	850.37	850.37	0.00	1
720.36	881.04	881.04	0.00	1

Table 2 - Culvert Summary Table: Culvert AT STA. 174+95

Total Discharge (cfs)	Culvert Discharge (cfs)	Headwater Elevation (ft)	Inlet Control Depth (ft)	Outlet Control Depth (ft)	Flow Type	Normal Depth (ft)	Critical Depth (ft)	Outlet Depth (ft)	Tailwater Depth (ft)	Outlet Velocity (ft/s)	Tailwater Velocity (ft/s)
574.33	574.33	718.39	5.819	5.960	2-M2c	3.963	3.747	3.747	3.403	10.949	11.399
605.00	605.00	718.60	6.028	6.170	2-M2c	4.125	3.879	3.879	3.493	11.140	11.556
635.67	635.67	718.81	6.237	6.377	2-M2c	4.285	4.009	4.009	3.580	11.326	11.715
666.34	666.34	719.01	6.445	6.581	2-M2c	4.442	4.137	4.137	3.666	11.505	11.857
688.37	688.37	719.16	6.594	6.725	2-M2c	4.555	4.228	4.228	3.725	11.630	11.961
727.68	727.68	719.41	6.861	6.980	2-M2c	4.757	4.387	4.387	3.828	11.848	12.142
758.36	758.36	719.61	7.070	7.175	2-M2c	4.915	4.510	4.510	3.907	12.012	12.273
789.03	789.03	719.80	7.280	7.368	2-M2c	5.069	4.630	4.630	3.983	12.171	12.406
819.70	819.70	719.99	7.491	7.559	2-M2c	5.223	4.750	4.750	4.058	12.327	12.533
850.37	850.37	720.18	7.703	7.747	2-M2c	5.377	4.867	4.867	4.133	12.479	12.649
881.04	881.04	720.36	7.918	7.933	2-M2c	5.531	4.984	4.984	4.205	12.627	12.767

****

Inlet Elevation (invert): 712.43 ft, Outlet Elevation (invert): 711.90 ft

Culvert Length: 148.50 ft, Culvert Slope: 0.0036

****

Table 3 - Downstream Channel Rating Curve

(Crossing: SH289-Culv D (Prop 2-7'x7' SBC))

Flow (cfs)	Water Surface Elev (ft)	Depth (ft)	Velocity (ft/s)	Shear (psf)	Froude Number
574.33	715.30	3.40	11.40	4.84	1.32
605.00	715.39	3.49	11.56	4.97	1.32
635.67	715.48	3.58	11.71	5.09	1.32
666.34	715.57	3.67	11.86	5.22	1.33
688.37	715.62	3.72	11.96	5.30	1.33
727.68	715.73	3.83	12.14	5.45	1.33
758.36	715.81	3.91	12.27	5.56	1.34
789.03	715.88	3.98	12.41	5.67	1.34
819.70	715.96	4.06	12.53	5.77	1.34
850.37	716.03	4.13	12.65	5.88	1.35
881.04	716.11	4.21	12.77	5.98	1.35

Rating Curve Plot for Crossing: SH289-Culv D (Prop 2-7'x7' SBC)

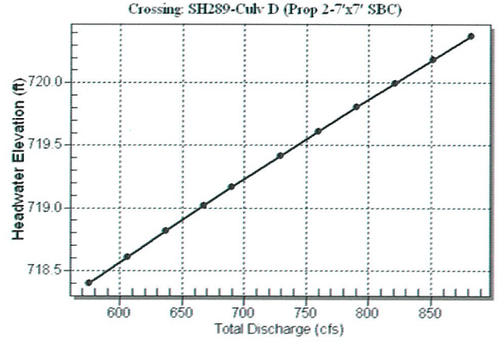

Culvert Notes: Culvert AT STA. 174+95

Culvert Performance Curve Plot: Culvert AT STA. 174+95

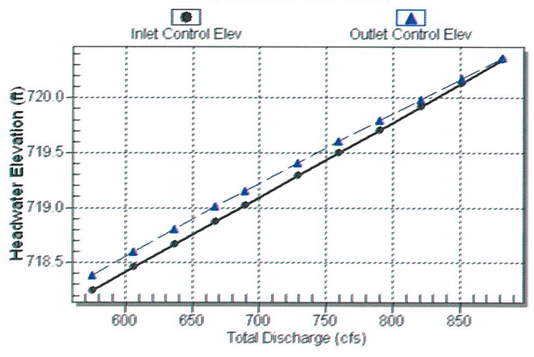

Water Surface Profile Plot for Culvert: Culvert AT STA. 174+95

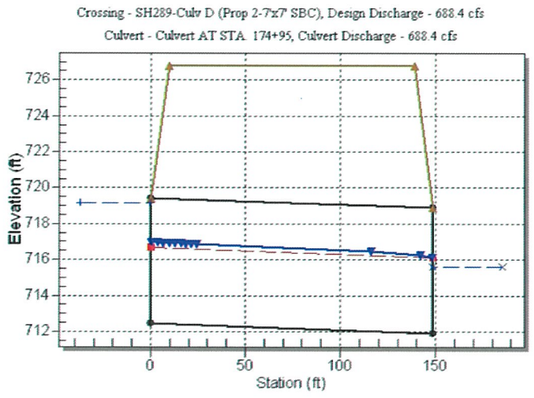

Site Data - Culvert AT STA. 174+95

Site Data Option: Culvert Invert Data
Inlet Station: 0.00 ft
Inlet Elevation: 712.43 ft
Outlet Station: 148.50 ft
Outlet Elevation: 711.90 ft
Number of Barrels: 2

Culvert Data Summary - Culvert AT STA. 174+95

Barrel Shape: Concrete Box
Barrel Span: 7.00 ft
Barrel Rise: 7.00 ft
Barrel Material: Concrete
Barrel Manning's n: 0.0130
Inlet Type: Conventional
Inlet Edge Condition: 1:1 Bevel Headwall
Inlet Depression: None

Tailwater Channel Data - SH289-Culv D (Prop 2-7'x7' SBC)

Tailwater Channel Option: Trapezoidal Channel
Bottom Width: 8.00 ft
Side Slope (H:V): 2.00 (_:1)
Channel Slope: 0.0228
Channel Manning's n: 0.0330
Channel Invert Elevation: 711.90 ft

Tailwater Rating Curve Plot for Crossing: SH289-Culv D (Prop 2-7'x7' SBC)

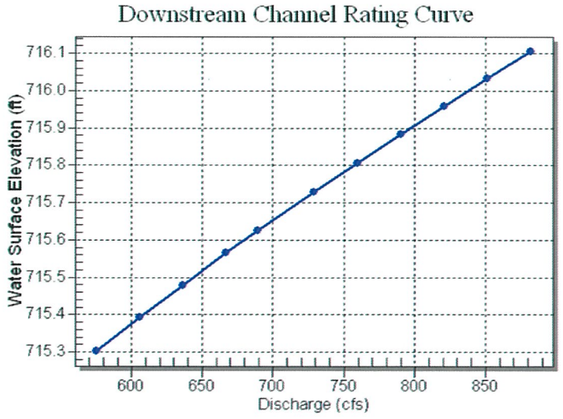

Roadway Data for Crossing: SH289-Culv D (Prop 2-7'x7' SBC)

Roadway Profile Shape: Irregular Roadway Shape (coordinates)
Irregular Roadway Cross-Section:

Coord No.	Station (ft)	Elevation (ft)
1	-400.00	726.77
2	-300.00	726.13
3	-200.00	725.48
4	-100.00	724.83
5	0.00	724.45
6	100.00	724.68
7	200.00	724.98
8	300.00	724.46
9	400.00	723.65

Roadway Surface: Paved
Roadway Top Width: 129.08 ft

STATE OF TEXAS
HASSAN SAM MOGHADASSI
84231
LICENSED
PROFESSIONAL ENGINEER

H. Moghadassi , P.E. 07/12/11
Signature of Registrant & Date

Culvert D Layout.dgn

Texas Department of Transportation
© 2011

SH 289
CULVERT "D" LAYOUT
DRAINAGE CALCULATIONS

Sheet 2 of 3

DESIGN	FED.RD. DIV.NO.	STATE PROJECT NO.		HIGHWAY NO.
OE	6	SEE TITLE SHEET		SH 289
GRAPHICS	STATE	DISTRICT	COUNTY	SHEET NO.
OE	TEXAS	DALLAS	COLLIN	
CHECK	CONTROL	SECTION	JOB	
SM	0091	03	P-201107-01	282
CHECK				

...\Culvert D Layout.dgn

7/11/2011
I:\dalgn*s\sh289\design\sheets\drng\CULVERT LAYOUT D\Culvert D Layout.dgn

TXDOT
40.0000 ft / IN.

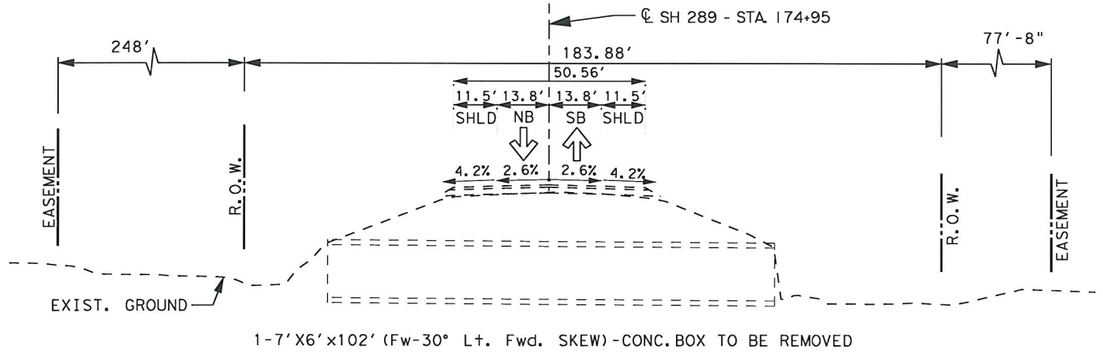

1-7'X6'x102' (Fw-30° Lt. Fwd. SKEW)-CONC. BOX TO BE REMOVED

TYPICAL SECTION - EXISTING STRUCTURE

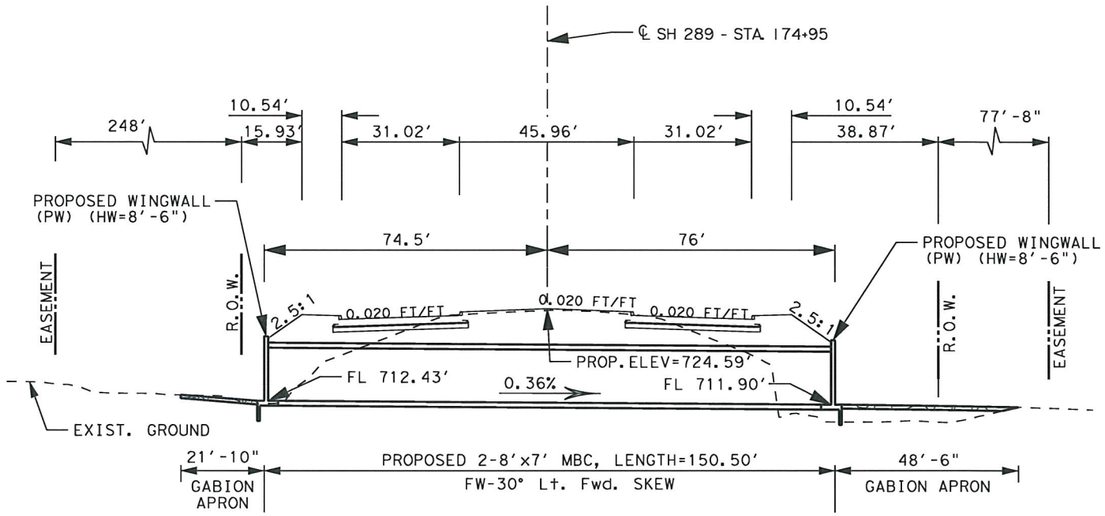

TYPICAL SECTION - COMPLETED STRUCTURE

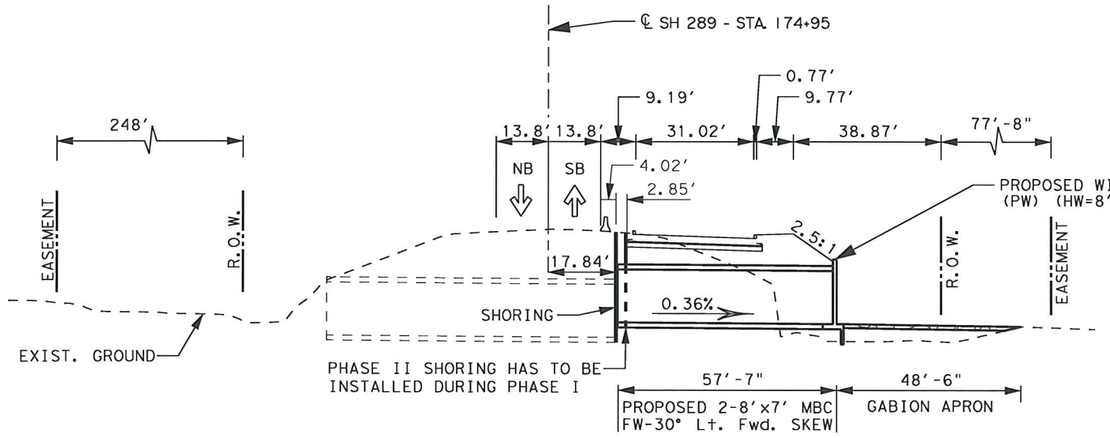

TYPICAL SECTION - PHASE 1 CONSTRUCTION (SOUTH BOUND)

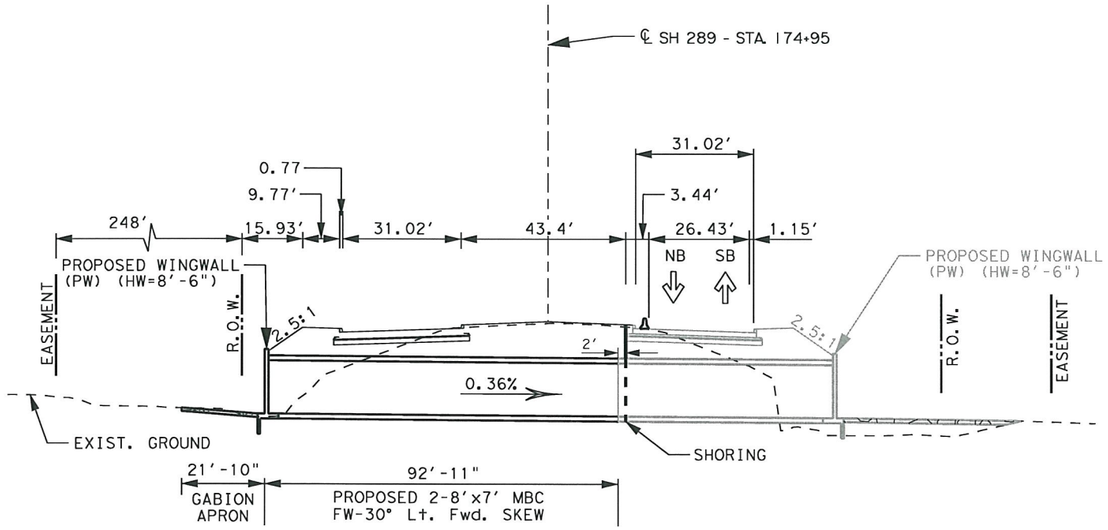

TYPICAL SECTION - PHASE 2 CONSTRUCTION (NORTH BOUND)

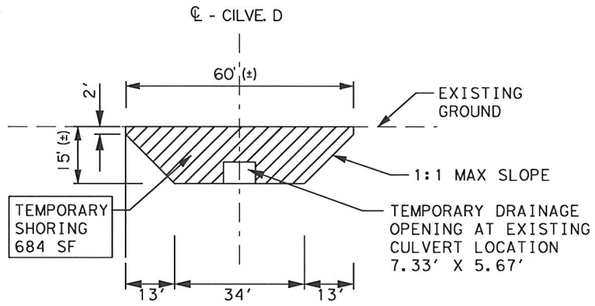

TEMPORARY SHORING PHASE 1

TABLE OF QUANTITIES

BID ITEMS	DESCRIPTION	QUANTITY	UNIT
403-2001	TEMPORARY SPL SHORING	1181.00	SF

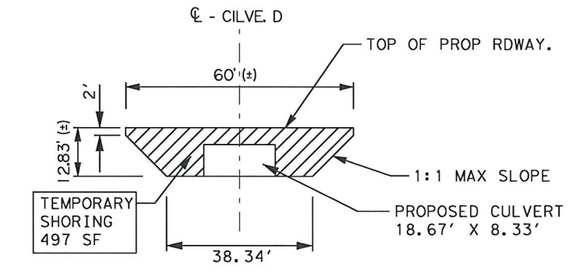

TEMPORARY SHORING PHASE 2

STATE OF TEXAS
HASSAN SAM MOGHADASSI
84231
LICENSED
PROFESSIONAL ENGINEER

H.M Moghadassi, P.E. 07/12/11
Signature of Registrant & Date

Culvert D Layout.dgn

Texas Department of Transportation
© 2011

SH 289
CULVERT D, UNKNOWN TRIB
LITTLE ELM CREEK
PHASE CONSTRUCTION

NOT TO SCALE — Sheet 3 of 3

DESIGN	FED. RD. DIV. NO.	STATE PROJECT		HIGHWAY NO.
OE	6	SEE TITLE SHEET		SH 289
GRAPHICS	STATE	DISTRICT	COUNTY	SHEET NO.
OE	TEXAS	DALLAS	COLLIN	
CHECK	CONTROL	SECTION	JOB	283
SM	0091	03	P-201107-01	
CHECK				

7/11/2011
I:\dgn*s\sh289\design\sheets\drng\CULVERT LAYOUT D\Culvert D Layout.dgn
...\Culvert D Layout.dgn

TXDOT
20.0000 ft / IN.

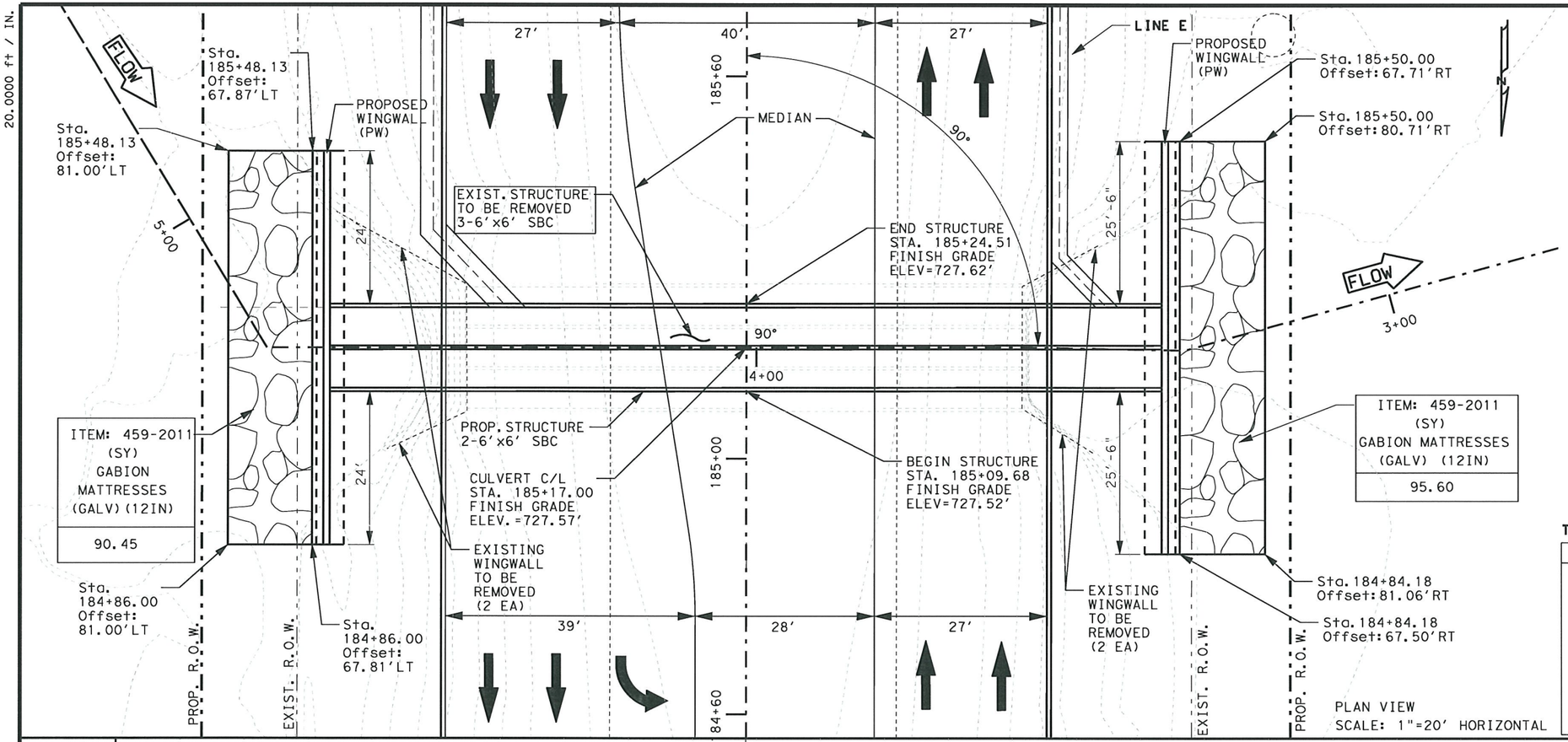

PLAN VIEW
SCALE: 1"=20' HORIZONTAL

PROPOSED HYDRAULIC DATA - DRAINAGE AREA = 185.89 ACRES			
25 YR Culvert Output		100 YR Culvert Output	
Q CulvGroup (CFS)	211.50	Q CulvGroup (CFS)	262.10
# Barrels (6'x6')	2.00	# Barrels (6'x6')	2.00
Q Barrels (cfs)	105.75	Q Barrels (cfs)	131.05
VEL (FPS)	4.15	VEL (FPS)	4.44
WS US (ft)	720.10	WS DS (ft)	720.59
WS DS (ft)	717.38	WS DS (ft)	717.59

REQUIRED STANDARDS:

1. PW: PARALLEL WINGS SKEWED/NON SKEWED
2. SCP-6: SINGLE BOX CULVERTS PRECAST
3. SCP-MD: PRECAST MISCELLANEOUS DETAILS
4. BCS: SUPPLEMENT WING AND END TREATMENT

TABLE OF QUANTITIES

BID ITEMS	DESCRIPTION	QUANTITY	UNIT
402-2001	TRENCH EXCAVATION PROTECTION	132.00	FT
459-2011	GABION MATTRESS (12") (GALV.)	186.05	SY
462-2013	CONC BOX CULV (6 FT x 6 FT)	264.00	FT
466-2052	WINGWALL (PW) (HW=8'-0")	1.00	EA
466-2288	WINGWALL (PW) (HW=8'-6")	1.00	EA
496-2001	REMOVE STR (BOX CULVERT)	3.00	EA

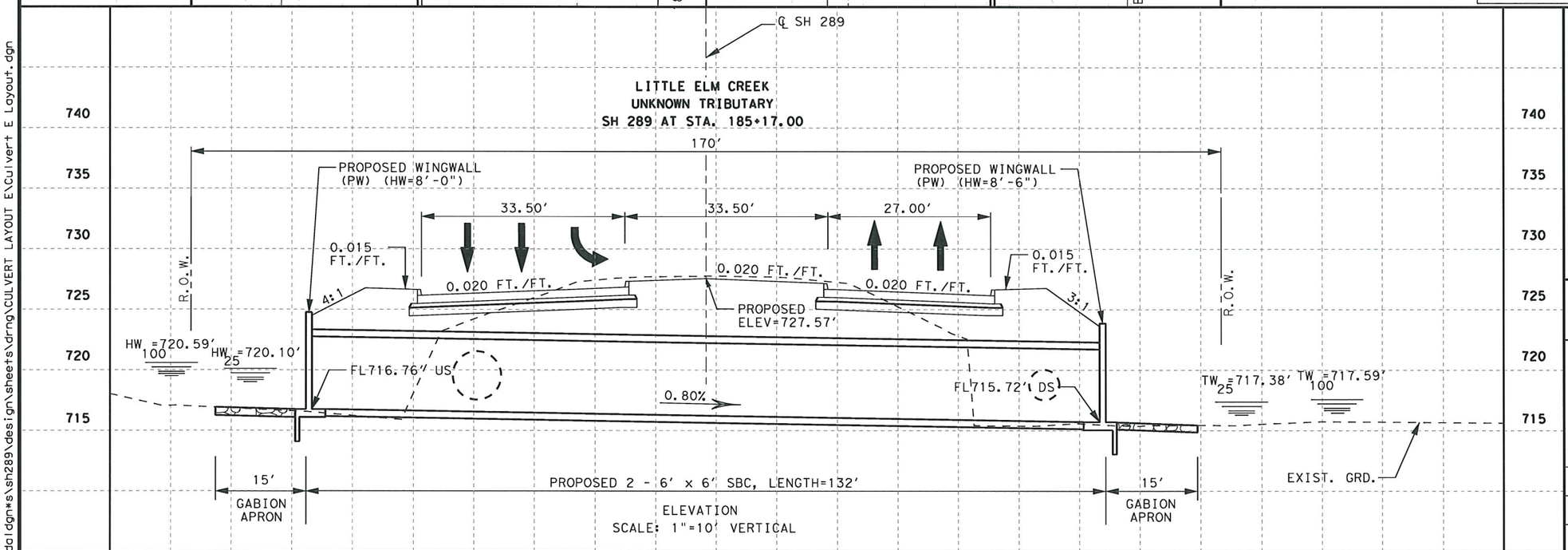

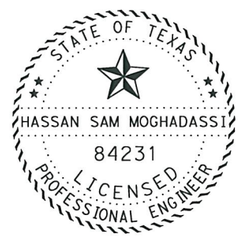

Signature of Registrant & Date, P.E. 07/12/11

Culvert E Layout.dgn

Texas Department of Transportation
© 2011

SH 289
CULVERT "E" LAYOUT
LITTLE ELM CREEK
UNKNOWN TRIBUTARY

SCALE: 1"= 20' H

Sheet 1 of 3

DESIGN	FED. RD. DIV. NO.	STATE PROJECT NO.		HIGHWAY NO.
OE	6	SEE TITLE SHEET		SH 289
GRAPHICS OE	STATE	DISTRICT	COUNTY	SHEET NO.
CHECK SM	TEXAS	DALLAS	COLLIN	
CHECK	CONTROL	SECTION	JOB	284
	0091	03		

P-201107-01

7/11/2011
I:\dgn*s\sh289\design\sheets\drng\CULVERT LAYOUT E\Culvert E Layout.dgn
...\Culvert E Layout.dgn

TXDOT
20.0000 ft / IN.

HY - 8 CULVERT ANALYSIS REPORT

Table 1 - Summary of Culvert Flows at Crossing: SH289-Culv E (Prop 2-6'x6')

Headwater Elevation (ft)	Total Discharge (cfs)	Culvert STA. at 185+17 Discharge (cfs)	Roadway Discharge (cfs)	Iterations
719.81	182.40	182.40	0.00	1
719.89	190.37	190.37	0.00	1
719.97	198.34	198.34	0.00	1
720.05	206.31	206.31	0.00	1
720.10	211.50	211.50	0.00	1
720.21	222.25	222.25	0.00	1
720.28	230.22	230.22	0.00	1
720.36	238.19	238.19	0.00	1
720.44	246.16	246.16	0.00	1
720.51	254.13	254.13	0.00	1
720.59	262.10	262.10	0.00	1

Table 2 - Culvert Summary Table: Culvert STA. at 185+17.00

Total Discharge (cfs)	Culvert Discharge (cfs)	Headwater Elevation (ft)	Inlet Control Depth (ft)	Outlet Control Depth (ft)	Flow Type	Normal Depth (ft)	Critical Depth (ft)	Outlet Depth (ft)	Tailwater Depth (ft)	Outlet Velocity (ft/s)	Tailwater Velocity (ft/s)
182.40	182.40	719.81	3.050	3.050	1-S2n	1.478	1.933	1.483	1.529	10.250	3.962
190.37	190.37	719.89	3.131	3.131	1-S2n	1.523	1.989	1.529	1.566	10.377	4.017
198.34	198.34	719.97	3.211	3.211	1-S2n	1.568	2.044	1.574	1.603	10.501	4.069
206.31	206.31	720.05	3.290	3.290	1-S2n	1.613	2.098	1.618	1.638	10.624	4.122
211.50	211.50	720.10	3.342	3.342	1-S2n	1.643	2.133	1.643	1.662	10.725	4.153
222.25	222.25	720.21	3.447	3.447	1-S2n	1.703	2.205	1.750	1.708	10.583	4.221
230.22	230.22	720.28	3.524	0.702	1-S2n	1.748	2.257	1.795	1.742	10.685	4.269
238.19	238.19	720.36	3.601	0.736	1-S2n	1.793	2.309	1.840	1.776	10.786	4.313
246.16	246.16	720.44	3.677	0.768	1-S2n	1.835	2.360	1.885	1.808	10.880	4.359
254.13	254.13	720.51	3.752	0.801	1-S2n	1.875	2.411	1.929	1.841	10.978	4.402
262.10	262.10	720.59	3.827	0.833	1-S2n	1.916	2.461	1.973	1.873	11.068	4.443

Table 3 - Downstream Channel Rating Curve (Crossing: SH289-Culv E (Prop 2-6'x6'))

Flow (cfs)	Water Surface Elev (ft)	Depth (ft)	Velocity (ft/s)	Shear (psf)	Froude Number
182.40	717.25	1.53	3.96	0.54	0.62
190.37	717.29	1.57	4.02	0.56	0.62
198.34	717.32	1.60	4.07	0.57	0.62
206.31	717.36	1.64	4.12	0.58	0.63
211.50	717.38	1.66	4.15	0.59	0.63
222.25	717.43	1.71	4.22	0.61	0.63
230.22	717.46	1.74	4.27	0.62	0.63
238.19	717.50	1.78	4.31	0.63	0.63
246.16	717.53	1.81	4.36	0.64	0.63
254.13	717.56	1.84	4.40	0.65	0.64
262.10	717.59	1.87	4.44	0.67	0.64

****

Inlet Elevation (invert): 716.76 ft, Outlet Elevation (invert): 715.72 ft

Culvert Length: 130.00 ft, Culvert Slope: 0.0080

****

Rating Curve Plot for Crossing: SH289-Culv E (Prop 2-6'x6')

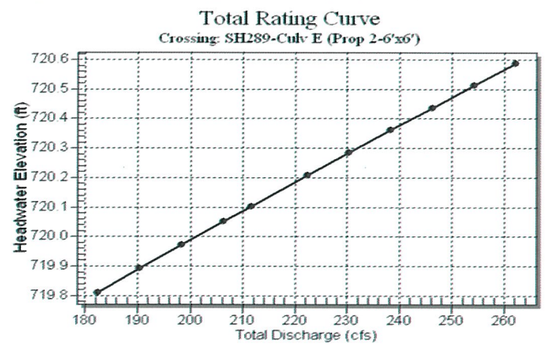

Culvert Notes: Culvert STA. at 185+17.00

Culvert Performance Curve Plot: Culvert STA. at 185+17.00

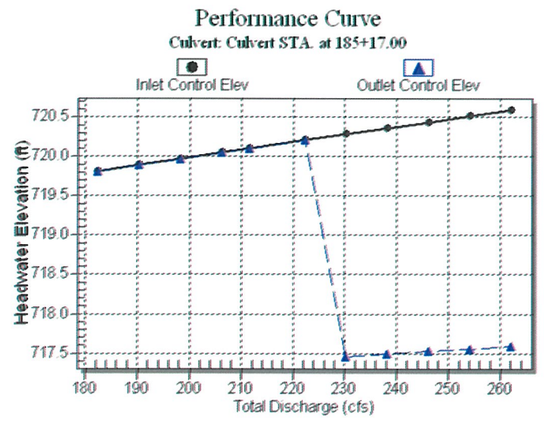

Water Surface Profile Plot for Culvert: Culvert STA. at 185+17.00

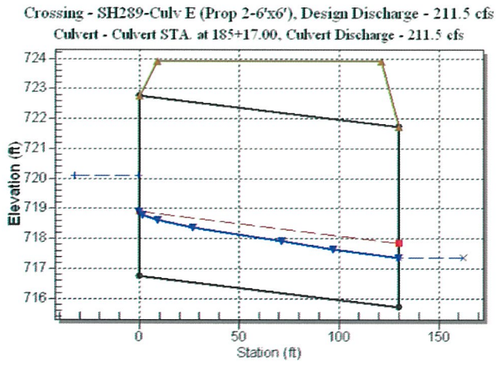

Site Data - Culvert STA. at 185+17.00

Site Data Option: Culvert Invert Data
Inlet Station: 0.00 ft
Inlet Elevation: 716.76 ft
Outlet Station: 130.00 ft
Outlet Elevation: 715.72 ft
Number of Barrels: 2

Culvert Data Summary - Culvert STA. at 185+17.00

Barrel Shape: Concrete Box
Barrel Span: 6.00 ft
Barrel Rise: 6.00 ft
Barrel Material: Concrete
Barrel Manning's n: 0.0130
Inlet Type: Conventional
Inlet Edge Condition: 1:1 Bevel Headwall
Inlet Depression: None

Tailwater Rating Curve Plot for Crossing: SH289-Culv E (Prop 2-6'x6')

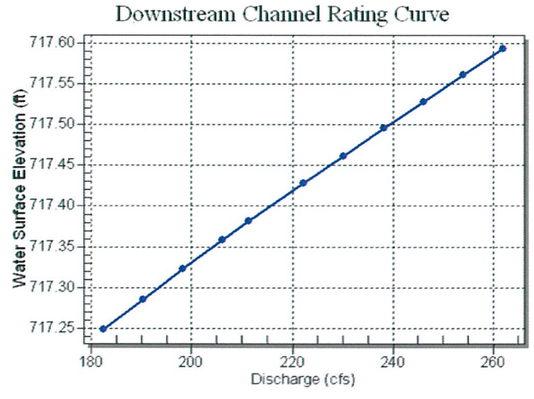

Roadway Data for Crossing: SH289-Culv E (Prop 2-6'x6')

Roadway Profile Shape: Irregular Roadway Shape (coordinates)
Irregular Roadway Cross-Section:

Coord No.	Station (ft)	Elevation (ft)
1	-300.00	723.90
2	-200.00	724.66
3	-100.00	725.41
4	0.00	726.16
5	100.00	726.93
6	200.00	728.17
7	300.00	730.14

Roadway Surface: Paved
Roadway Top Width: 112.34 ft

Tailwater Channel Data - SH289-Culv E (Prop 2-6'x6')

Tailwater Channel Option: Trapezoidal Channel
Bottom Width: 24.00 ft
Side Slope (H:V): 4.00 (_:1)
Channel Slope: 0.0057
Channel Manning's n: 0.0330
Channel Invert Elevation: 715.72 ft

H. Moghadassi ,P.E. 07/12/11
Signature of Registrant & Date

Culvert E Layout.dgn

Texas Department of Transportation
© 2011

SH 289
CULVERT "E" LAYOUT
DRAINAGE CALCULATIONS

Sheet 2 of 3

DESIGN	FED.RD. DIV.NO.	STATE PROJECT NO.		HIGHWAY NO.
SHM	6	SEE TITLE SHEET		SH 289
GRAPHICS OE	STATE	DISTRICT	COUNTY	SHEET NO.
CHECK SM	TEXAS	DALLAS	COLLIN	285
CHECK	CONTROL	SECTION	JOB	
	0091	03	P-201107-01	

...\Culvert E Layout.dgn

7/11/2011
I:\dotdgn*s\sh289\design\sheets\drng\CULVERT LAYOUT E\Culvert E Layout.dgn

TXDOT
30.0000 ft / IN.

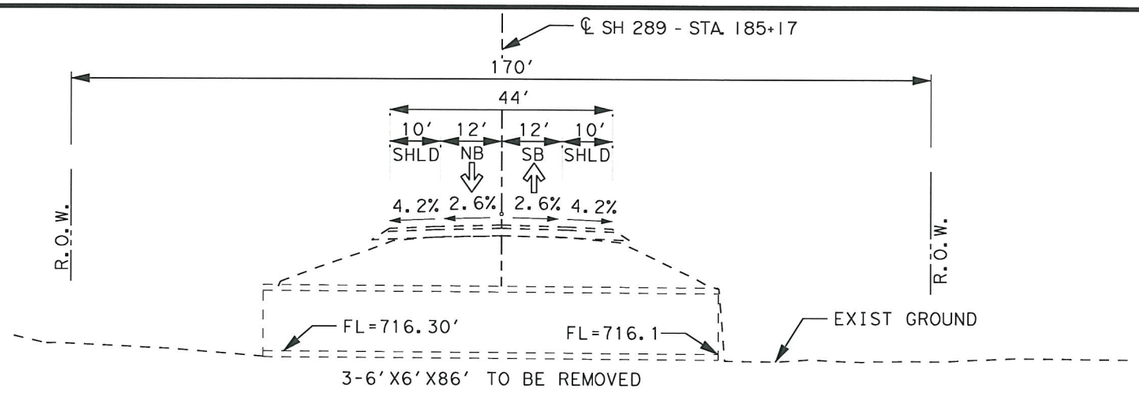

TYPICAL SECTION - EXISTING STRUCTURE

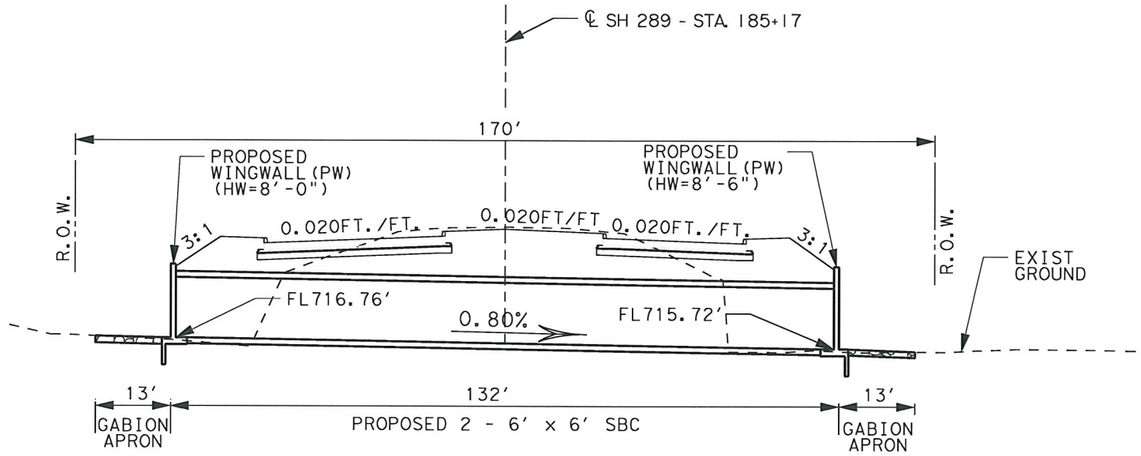

TYPICAL SECTION - COMPLETED STRUCTURE

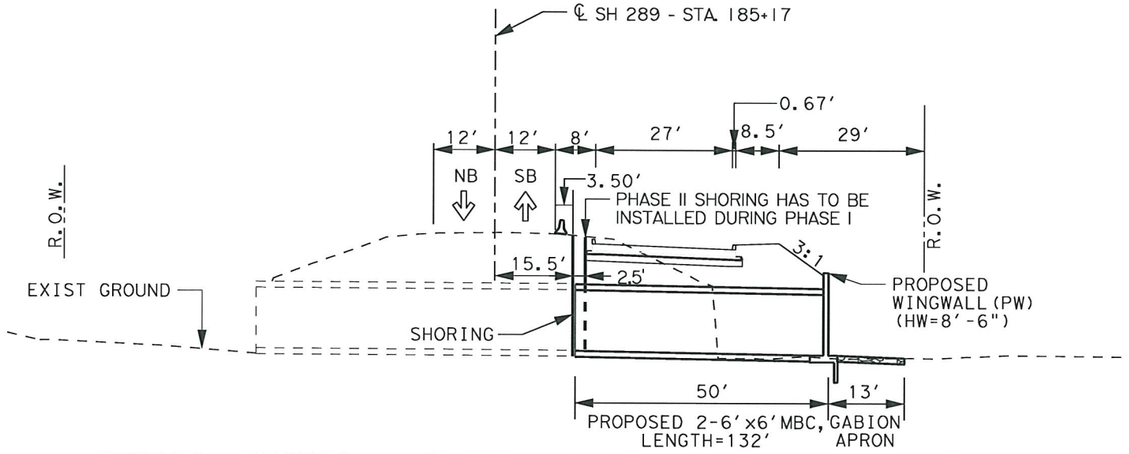

TYPICAL SECTION - PHASE 1 CONSTRUCTION (SOUTH BOUND)

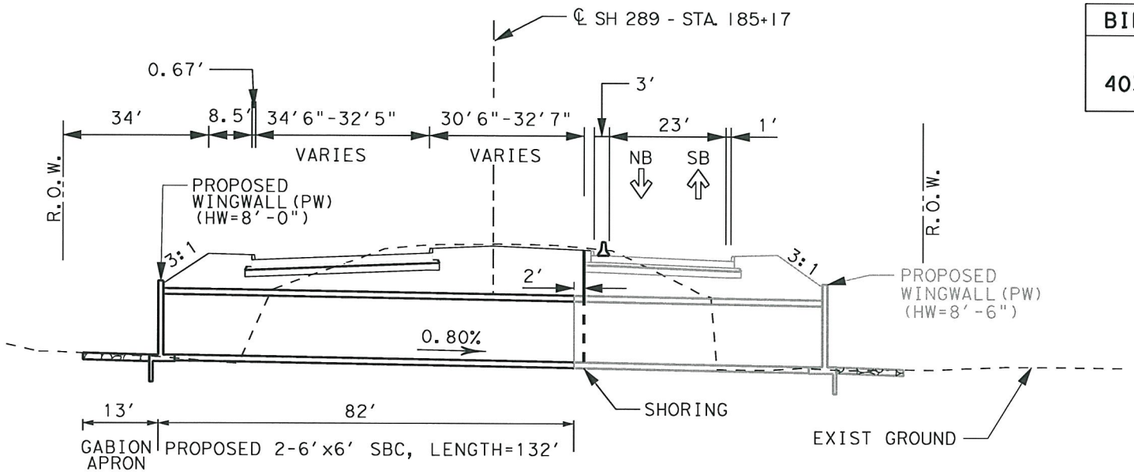

TYPICAL SECTION - PHASE 2 CONSTRUCTION (NORTH BOUND)

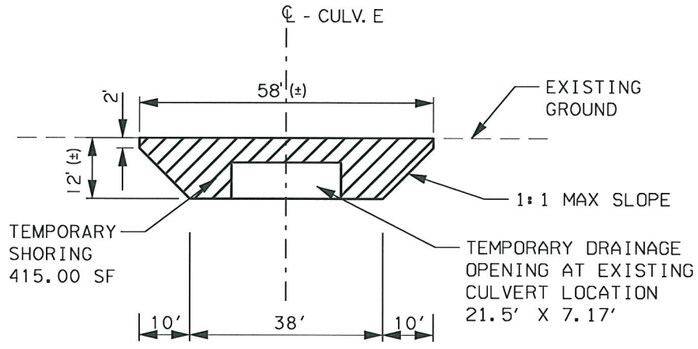

TEMPORARY SHORING PHASE 1

TABLE OF QUANTITIES

BID ITEMS	DESCRIPTION	QUANTITY	UNIT
403-2001	TEMPORARY SPL SHORING	881.00	SF

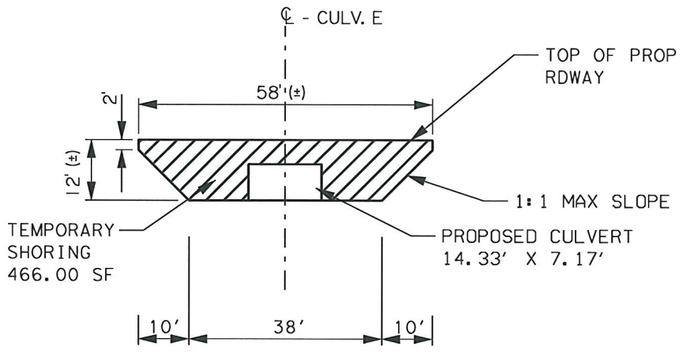

TEMPORARY SHORING PHASE 2

STATE OF TEXAS
HASSAN SAM MOGHADASSI
84231
LICENSED PROFESSIONAL ENGINEER

H. Moghadassi ,P.E. 07/12/11
Signature of Registrant & Date

Culvert E Layout.dgn

Texas Department of Transportation
© 2011

SH 289
CULVERT E, UNKNOWN TRIB
LITTLE ELM CREEK
PHASE CONSTRUCTION

NOT TO SCALE — Sheet 3 of 3

DESIGN	FED.RD. DIV.NO.	STATE PROJECT NO.		HIGHWAY NO.
OE	6	SEE TITLE SHEET		SH 289
GRAPHICS OE	STATE	DISTRICT	COUNTY	SHEET NO.
CHECK SM	TEXAS	DALLAS	COLLIN	286
CHECK	CONTROL	SECTION	JOB	
	0091	03	P-201107-01	

7/11/2011
I:\dalgns*s\sh289\design\sheets\drng\CULVERT LAYOUT E\Culvert E Layout.dgn
...\Culvert E Layout.dgn

TXDOT
20.0000 ft / IN.

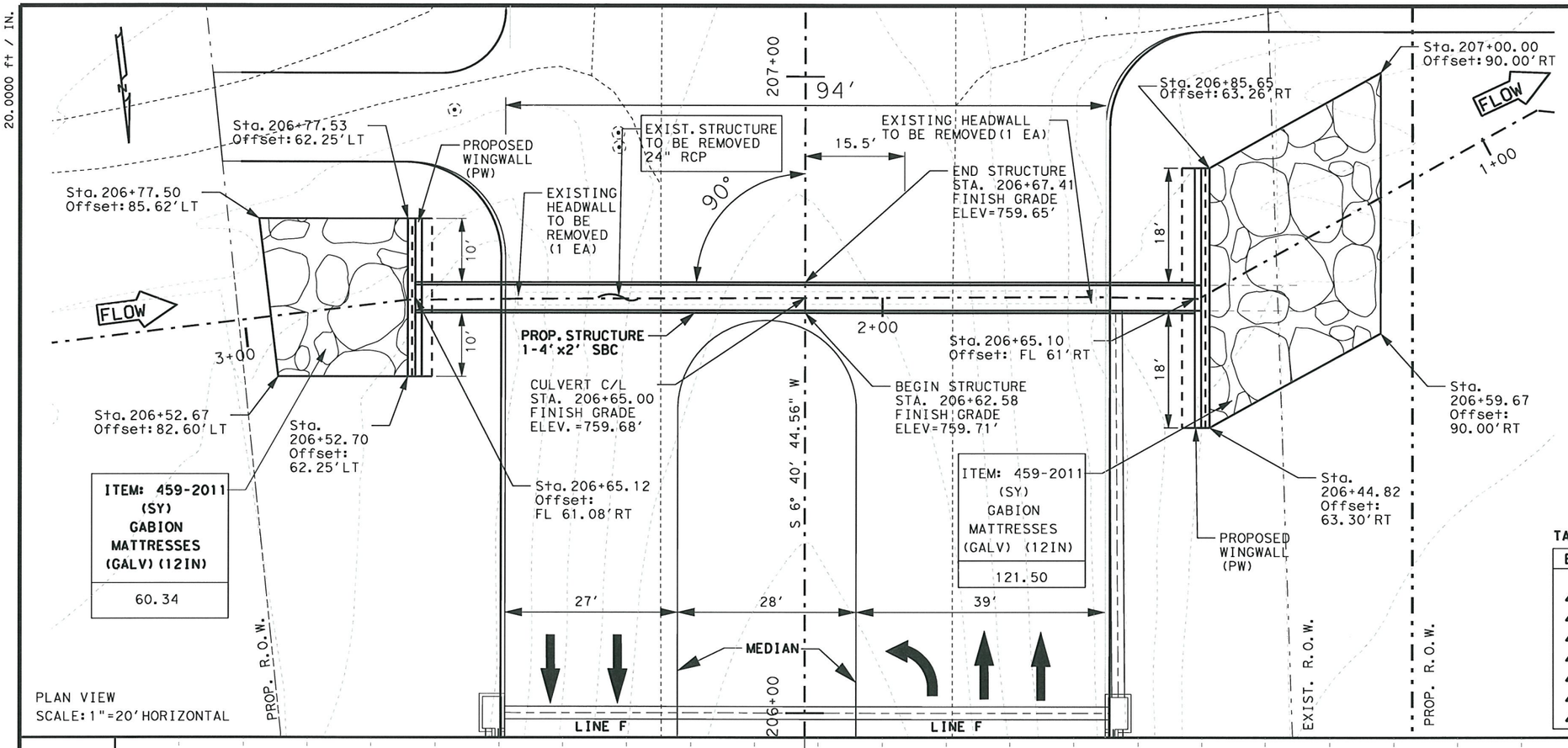

PLAN VIEW
SCALE: 1"=20' HORIZONTAL

PROPOSED HYDRAULIC DATA - DRAINAGE AREA = 185.89 ACRES			
25 YR Culvert Output		100 YR Culvert Output	
Q CulvGroup (CFS)	47.70	Q CulvGroup (CFS)	58.70
# Barrels (4'x2')	1.00	# Barrels (4'x2')	1.00
Q Barrels (cfs)	47.70	Q Barrels (cfs)	58.70
TW VEL (FPS)	3.58	TW VEL (FPS)	3.77
WS US (ft)	755.78	WS DS (ft)	756.38
WS DS (ft)	753.15	WS DS (ft)	753.25

REQUIRED STANDARDS:
1. PW: PARALLEL WINGS SKEWED/NON SKEWED
2. SCP-4: SINGLE BOX CULVERTS PRECAST
3. SCP-MD: PRECAST MISCELLANEOUS DETAILS
4. BCS: SUPPLEMENT WING AND END TREATMENT

TABLE OF QUANTITIES

BID ITEMS	DESCRIPTION	QUANTITY	UNIT
402-2001	TRENCH EXCAVATION PROTECTION	122.00	FT
459-2011	GABION MATTRESS (12") (GALV.)	181.84	SY
462-2003	CONC BOX CULV (4 FT x 2 FT)	122.00	FT
466-2049	WINGWALL (PW) (HW=5'-0")	1	EA
466-2050	WINGWALL (PW) (HW=6'-0")	1	EA
496-2006	REMOV STR (HEADWALL)	2	EA
496-2007	REMOV STR (PIPE)	1	EA

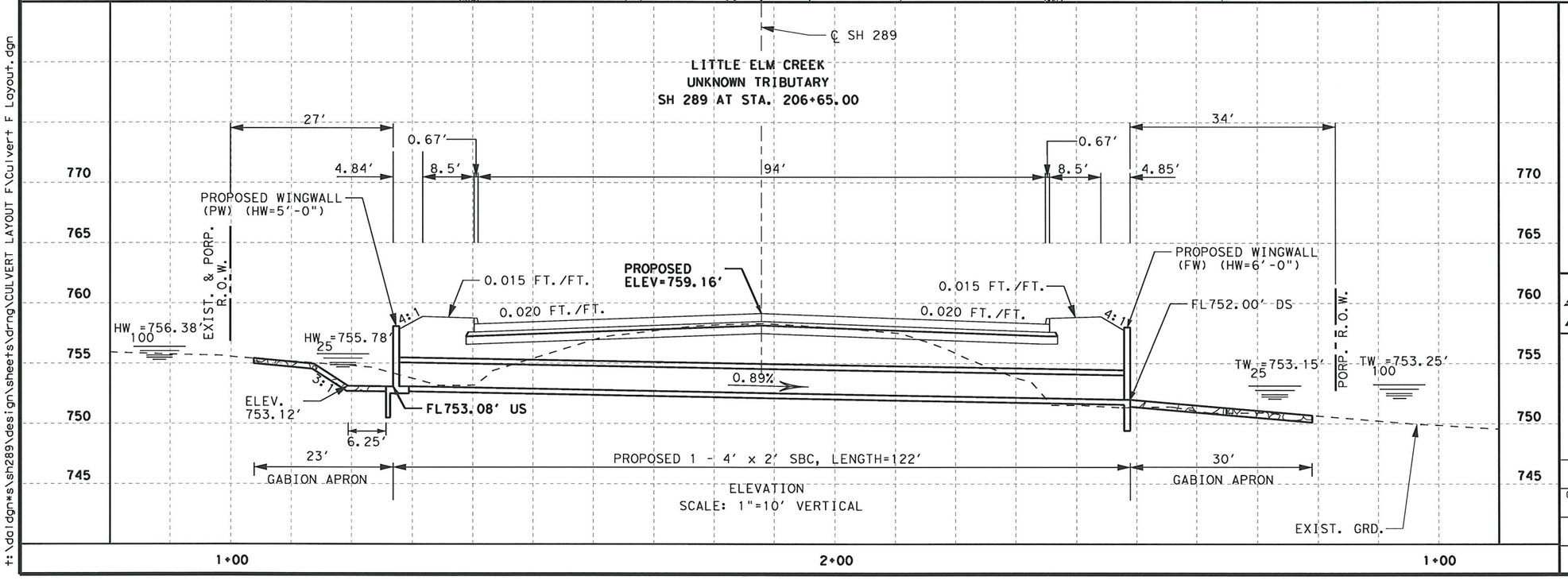

STATE OF TEXAS
HASSAN SAM MOGHADASSI
84231
LICENSED PROFESSIONAL ENGINEER

H. Moghadassi, P.E. 07/12/11
Signature of Registrant & Date

Culvert F Layout.dgn

Texas Department of Transportation
© 2011

SH 289
CULVERT "F" LAYOUT
LITTLE ELM CREEK
UNKNOWN TRIBUTARY

SCALE: 1"= 20 H
Sheet 1 of 3

DESIGN	FED.RD. DIV.NO.	STATE PROJECT NO.		HIGHWAY NO.
OE	6	SEE TITLE SHEET		SH 289
GRAPHICS OE	STATE	DISTRICT	COUNTY	SHEET NO.
CHECK SM	TEXAS	DALLAS	COLLIN	287
CHECK	CONTROL	SECTION	JOB	
	0091	03	P-201107-01	

7/11/2011
t:\dalgn*s\sh289\design\sheets\drng\CULVERT LAYOUT F\Culvert F Layout.dgn
...\Culvert F Layout.dgn

TXDOT
20.0000 ft / IN.

HY - 8 CULVERT ANALYSIS REPORT

Table 1 - Summary of Culvert Flows at Crossing: SH289-Culv F (Prop 1-4'x2')

Headwater Elevation (ft)	Total Discharge (cfs)	Culvert STA. at 206+65 Discharge (cfs)	Roadway Discharge (cfs)	Iterations
755.46	41.10	41.10	0.00	1
755.54	42.86	42.86	0.00	1
755.63	44.62	44.62	0.00	1
755.72	46.38	46.38	0.00	1
755.78	47.70	47.70	0.00	1
755.89	49.90	49.90	0.00	1
755.99	51.66	51.66	0.00	1
756.08	53.42	53.42	0.00	1
756.18	55.18	55.18	0.00	1
756.28	56.94	56.94	0.00	1
756.38	58.70	58.70	0.00	1

Table 2 - Culvert Summary Table: Culvert STA. at 206+65

Total Discharge (cfs)	Culvert Discharge (cfs)	Headwater Elevation (ft)	Inlet Control Depth (ft)	Outlet Control Depth (ft)	Flow Type	Normal Depth (ft)	Critical Depth (ft)	Outlet Depth (ft)	Tailwater Depth (ft)	Outlet Velocity (ft/s)	Tailwater Velocity (ft/s)
41.10	41.10	755.46	2.380	0.012	5-S2n	1.167	1.489	1.168	1.092	8.799	3.445
42.86	42.86	755.54	2.464	0.030	5-S2n	1.203	1.531	1.204	1.110	8.900	3.481
44.62	44.62	755.63	2.549	0.046	5-S2n	1.237	1.573	1.239	1.126	9.006	3.517
46.38	46.38	755.72	2.636	0.063	5-S2n	1.271	1.614	1.273	1.143	9.111	3.551
47.70	47.70	755.78	2.702	0.075	5-S2n	1.297	1.644	1.298	1.155	9.186	3.576
49.90	49.90	755.89	2.815	0.095	5-S2n	1.340	1.694	1.343	1.175	9.286	3.616
51.66	51.66	755.99	2.907	0.110	5-S2n	1.374	1.734	1.376	1.190	9.383	3.648
53.42	53.42	756.08	3.002	0.125	5-S2n	1.407	1.773	1.408	1.205	9.484	3.679
55.18	55.18	756.18	3.099	0.140	5-S2n	1.440	1.812	1.443	1.220	9.558	3.708
56.94	56.94	756.28	3.198	0.154	5-S2n	1.473	1.850	1.474	1.234	9.656	3.738
58.70	58.70	756.38	3.300	0.168	5-S2n	1.506	1.888	1.510	1.248	9.722	3.766

****

Inlet Elevation (invert): 753.08 ft, Outlet Elevation (invert): 752.00 ft

Culvert Length: 122.00 ft, Culvert Slope: 0.0089

****

Table 3 - Downstream Channel Rating Curve (Crossing: SH289-Culv F (Prop 1-4'x2'))

Flow (cfs)	Water Surface Elev (ft)	Depth (ft)	Velocity (ft/s)	Shear (psf)	Froude Number
41.10	753.09	1.09	3.45	0.90	0.82
42.86	753.11	1.11	3.48	0.91	0.82
44.62	753.13	1.13	3.52	0.93	0.83
46.38	753.14	1.14	3.55	0.94	0.83
47.70	753.15	1.15	3.58	0.95	0.83
49.90	753.17	1.17	3.62	0.97	0.83
51.66	753.19	1.19	3.65	0.98	0.83
53.42	753.21	1.21	3.68	0.99	0.84
55.18	753.22	1.22	3.71	1.00	0.84
56.94	753.23	1.23	3.74	1.02	0.84
58.70	753.25	1.25	3.77	1.03	0.84

Tailwater Channel Data - SH289-Culv F (Prop 1-4'x2')

Tailwater Channel Option: Triangular Channel
Side Slope (H:V): 10.00 (_:1)
Channel Slope: 0.0132
Channel Manning's n: 0.0330
Channel Invert Elevation: 752.00 ft

Rating Curve Plot for Crossing: SH289-Culv F (Prop 1-4'x2')

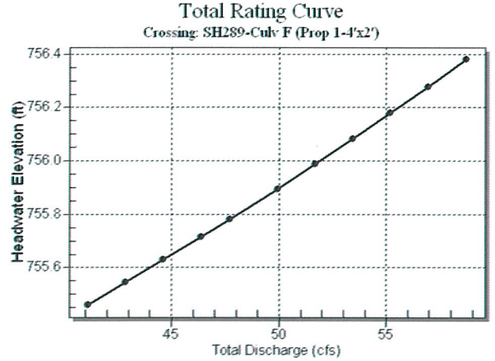

Culvert Notes: Culvert STA. at 206+65.00

Culvert Performance Curve Plot: Culvert STA. at 206+65.00

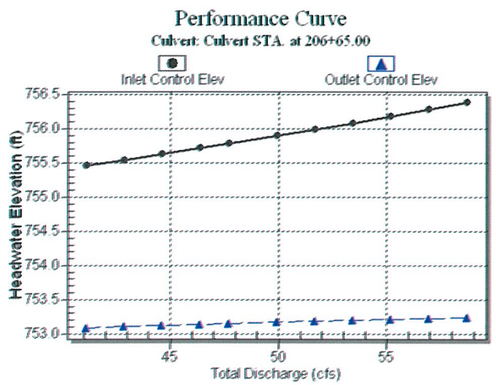

Water Surface Profile Plot for Culvert: Culvert STA. at 206+65.00

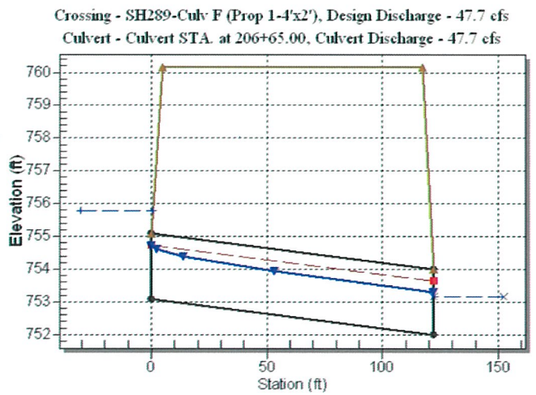

Site Data - Culvert STA. at 206+65

Site Data Option: Culvert Invert Data
Inlet Station: 0.00 ft
Inlet Elevation: 753.08 ft
Outlet Station: 122.00 ft
Outlet Elevation: 752.00 ft
Number of Barrels: 1

Culvert Data Summary - Culvert STA. at 206+65

Barrel Shape: Concrete Box
Barrel Span: 4.00 ft
Barrel Rise: 2.00 ft
Barrel Material: Concrete
Barrel Manning's n: 0.0130
Inlet Type: Conventional
Inlet Edge Condition: 1:1 Bevel Headwall
Inlet Depression: None

Tailwater Rating Curve Plot for Crossing: SH289-Culv F (Prop 1-4'x2')

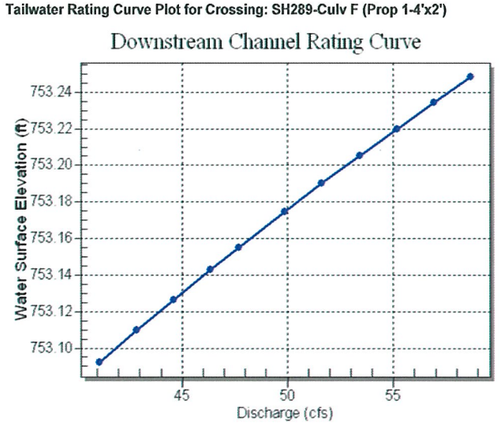

Roadway Data for Crossing: SH289-Culv F (Prop 1-4'x2')

Roadway Profile Shape: Irregular Roadway Shape (coordinates)
Irregular Roadway Cross-Section:

Coord No.	Station (ft)	Elevation (ft)
1	-100.00	760.15
2	0.00	758.88
3	100.00	757.62

Roadway Surface: Paved
Roadway Top Width: 112.34 ft

STATE OF TEXAS
HASSAN SAM MOGHADASSI
84231
LICENSED
PROFESSIONAL ENGINEER

H. Moghadassi , P.E. 07/12/11
Signature of Registrant & Date

Culvert F Layout.dgn

Texas Department of Transportation
© 2011

SH 289
CULVERT "F" LAYOUT
DRAINAGE CALCULATIONS

Sheet 2 of 3

DESIGN SM	FED.RD. DIV.NO.	STATE PROJECT NO.		HIGHWAY NO.
GRAPHICS OE	6	SEE TITLE SHEET		SH 289
CHECK SM	STATE	DISTRICT	COUNTY	SHEET NO.
CHECK	TEXAS	DALLAS	COLLIN	288
	CONTROL	SECTION	JOB	
	0091	03	P-201107-01	

...\Culvert F Layout.dgn

7/11/2011
I:\dal\dgn\s\sh289\design\sheets\drng\CULVERT LAYOUT F\Culvert F Layout.dgn

TXDOT
30.0000 ft / IN.

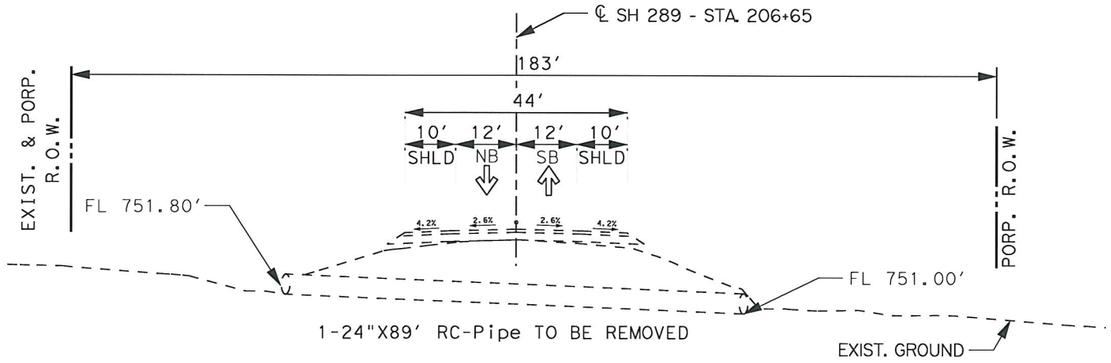

TYPICAL SECTION - EXISTING STRUCTURE

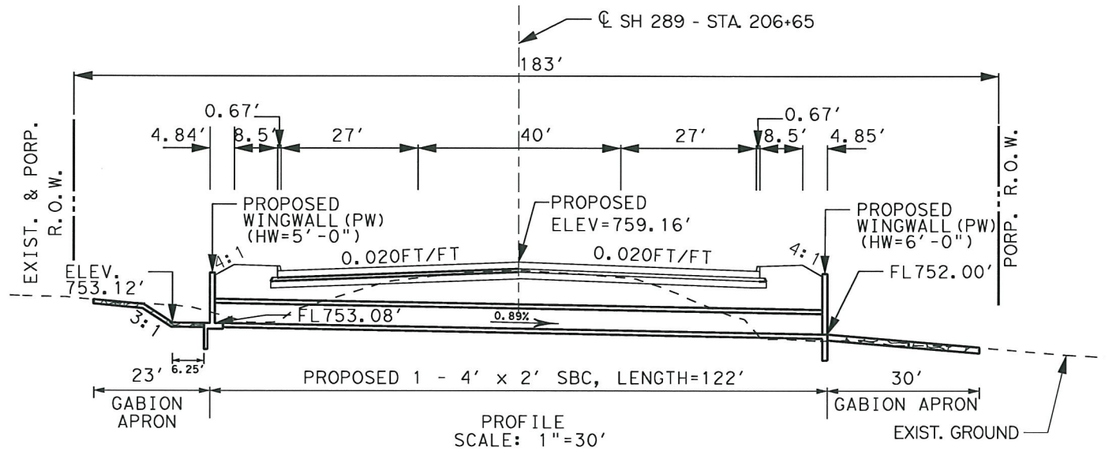

TYPICAL SECTION - COMPLETED STRUCTURE

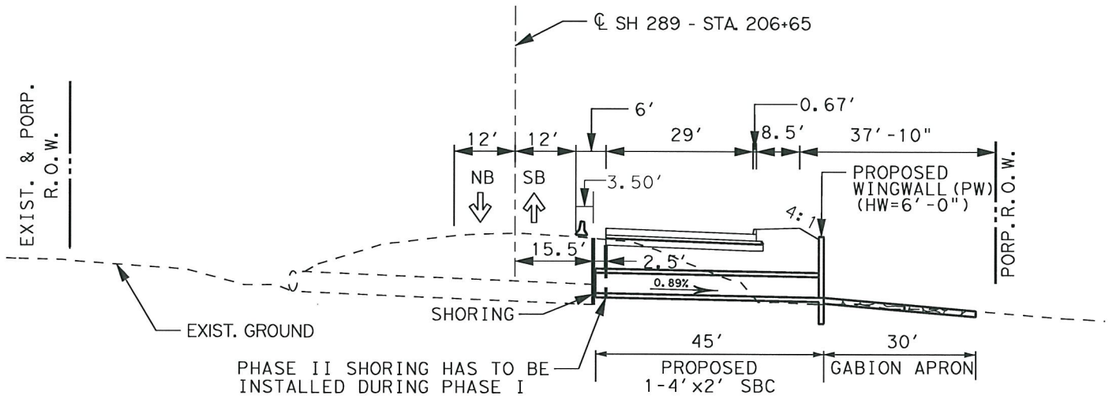

TYPICAL SECTION - PHASE 1 CONSTRUCTION (SOUTH BOUND)

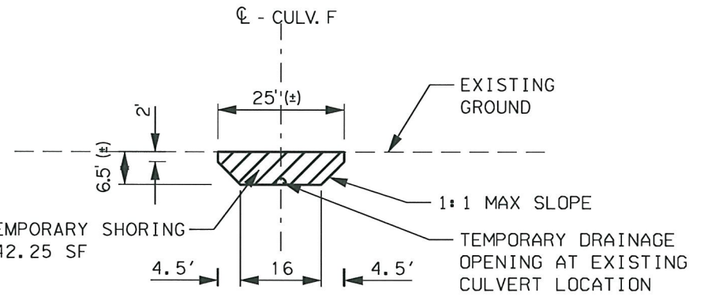

TEMPORARY SHORING PHASE 1

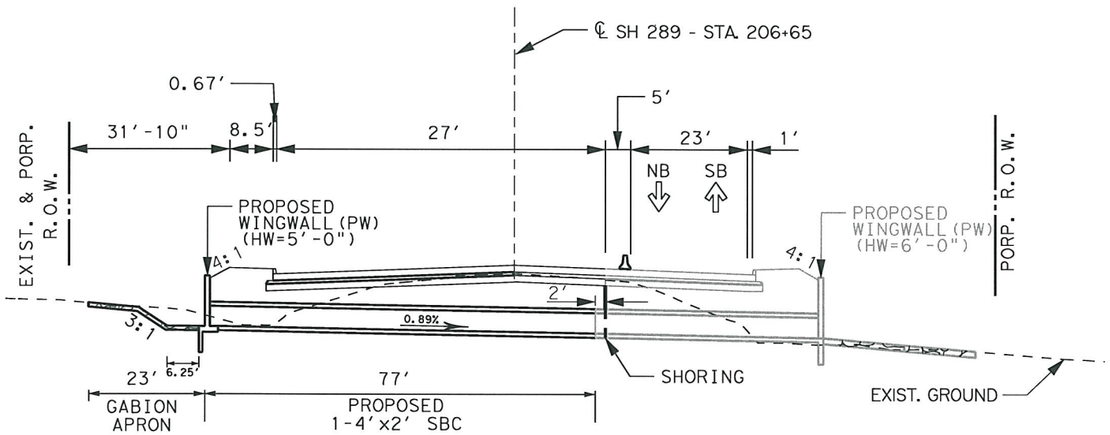

TYPICAL SECTION - PHASE 2 CONSTRUCTION (NORTH BOUND)

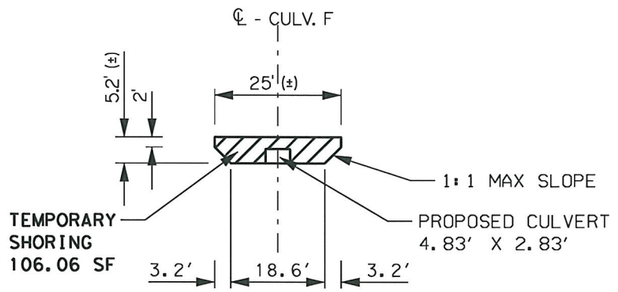

TEMPORARY SHORING PHASE 2

TABLE OF QUANTITIES

BID ITEMS	DESCRIPTION	QUANTITY	UNIT
403-2001	TEMPORARY SPL SHORING	248.31	SF

STATE OF TEXAS
HASSAN SAM MOGHADASSI
84231
LICENSED
PROFESSIONAL ENGINEER

H. Moghadassi, P.E. 07/12/11
Signature of Registrant & Date

Culvert F Layout.dgn

Texas Department of Transportation
© 2011

SH 289
CULVERT F, UNKNOWN TRIB
LITTLE ELM CREEK
PHASE CONSTRUCTION

NOT TO SCALE — Sheet 3 of 3

DESIGN SM	FED.RD. DIV.NO.	STATE PROJECT NO.		HIGHWAY NO.
GRAPHICS OE	6	SEE TITLE SHEET		SH 289
CHECK SM	STATE	DISTRICT	COUNTY	SHEET NO.
CHECK	TEXAS	DALLAS	COLLIN	289
	CONTROL	SECTION	JOB	
	0091	03	P-201107-01	

...\Culvert F Layout.dgn

7/11/2011
I:\dal\dgn\s\sh289\design\sheets\drng\CULVERT LAYOUT F\Culvert F Layout.dgn

TXDOT
40.0000 ft / IN.

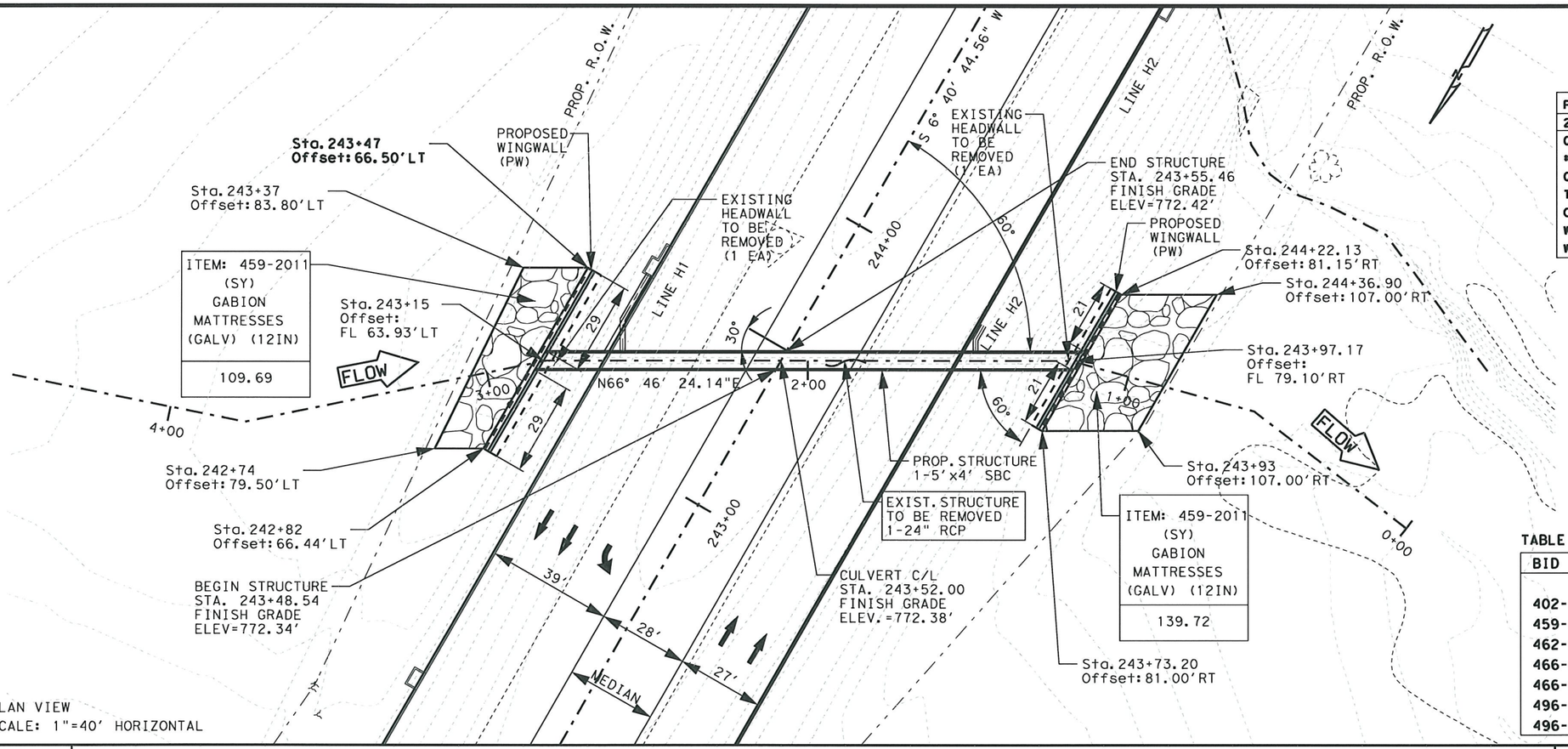

PLAN VIEW
SCALE: 1"=40' HORIZONTAL

PROPOSED HYDRAULIC DATA - DRAINAGE AREA = 21.08 ACRES			
25 YR Culvert Output		100 YR Culvert Output	
Q CulvGroup (CFS)	50.28	Q CulvGroup (CFS)	61.96
# Barrels (5'x4')	1.00	# Barrels (5'x4')	1.00
Q Barrels (cfs)	50.28	Q Barrels (cfs)	61.96
TW VEL (FPS)	8.25	TW VEL (FPS)	8.81
OUTLET VEL (FPS)	10.85	OUTLET VEL (FPS)	11.63
WS US (ft)	763.22	WS DS (ft)	763.58
WS DS (ft)	758.93	WS DS (ft)	759.01

REQUIRED STANDARDS:

1. PW: PARALLEL WINGS SKEWED/NON SKEWED
2. SCP-5: SINGLE BOX CULVERTS PRECAST
3. SCP-MD: PRECAST MISCELLANEOUS DETAILS
4. BCS: SUPPLEMENT WING AND END TREATMENT

TABLE OF QUANTITIES

BID ITEMS	DESCRIPTION	QUANTITY	UNIT
402-2001	TRENCH EXCAVATION PROTECTION	167.00	FT
459-2011	GABION MATTRESS (12") (GALV.)	249.41	SY
462-2008	CONC BOX CULV (5 FT X 4 FT)	167.00	FT
466-2288	WINGWALL (PW) (HW=8'-6")	1	EA
466-2050	WINGWALL (PW) (HW=6'-0")	1	EA
496-2006	REMOV STR (HEADWALL)	2	EA
496-2007	REMOV STR (PIPE)	1	EA

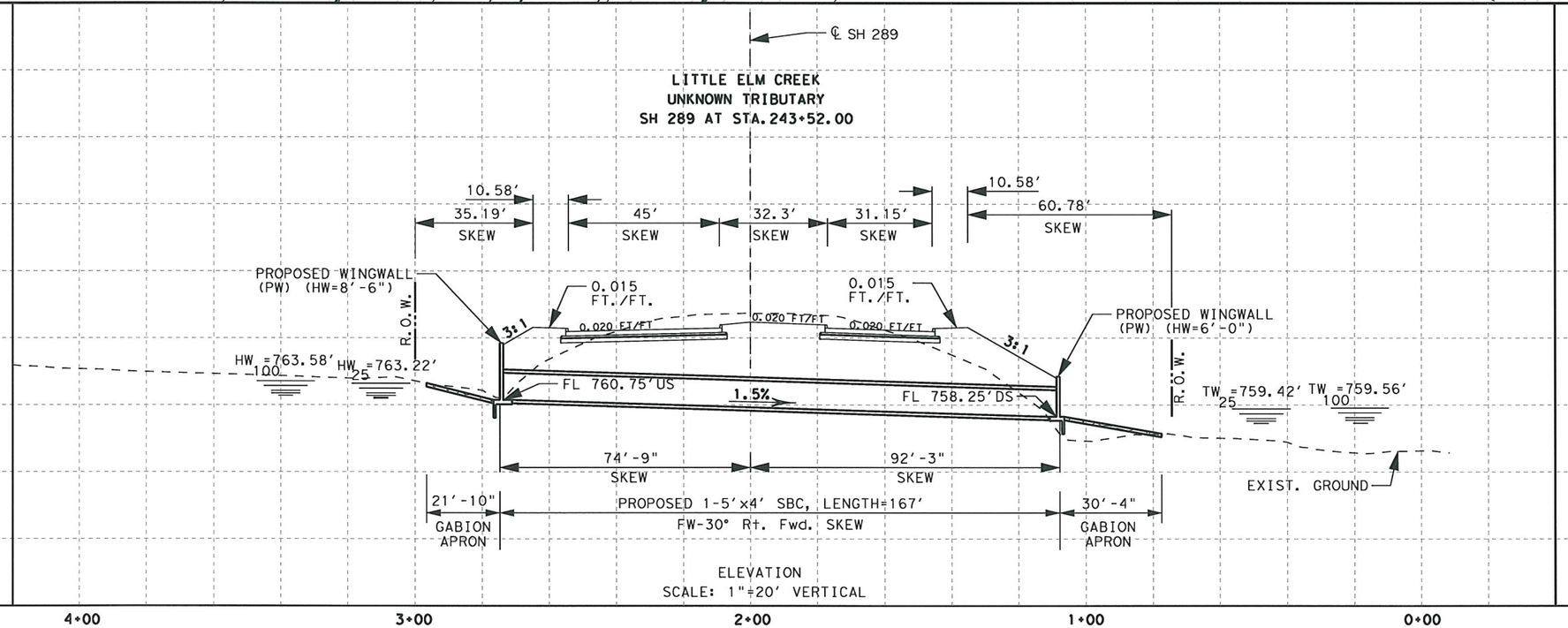

ELEVATION
SCALE: 1"=20' VERTICAL

STATE OF TEXAS
HASSAN SAM MOGHADASSI
84231
LICENSED PROFESSIONAL ENGINEER

H. Moghadassi ,P.E. 07/12/11
Signature of Registrant & Date

Culvert H Layout.dgn

Texas Department of Transportation
© 2011

SH 289
CULVERT "H" LAYOUT
LITTLE ELM CREEK
UNKNOWN TRIBUTARY

SCALE: 1"= 40'H Sheet 1 of 3

DESIGN	FED. RD. DIV. NO.	STATE PROJECT NO.		HIGHWAY NO.
OE	6	SEE TITLE SHEET		SH 289
GRAPHICS OE	STATE	DISTRICT	COUNTY	SHEET NO.
CHECK SM	TEXAS	DALLAS	COLLIN	290
CHECK	CONTROL	SECTION	JOB	
	0091	03		

P-201107-01

7/11/2011
t:\dal\dgn*s\sh289\design\sheets\drng\CULVERT LAYOUT H\Culvert H Layout.dgn

...\Culvert H Layout.dgn

TXDOT
20.0000 ft / IN.

HY - 8 CULVERT ANALYSIS REPORT

Table 1 - Summary of Culvert Flows at Crossing: SH289-Culv H (Prop 1-5x4 MBC)

Headwater Elevation (ft)	Total Discharge (cfs)	Culvert STA. at 243+52 Discharge (cfs)	Roadway Discharge (cfs)	Iterations
762.99	43.34	43.34	0.00	1
763.05	45.20	45.20	0.00	1
763.11	47.06	47.06	0.00	1
763.17	48.93	48.93	0.00	1
763.22	50.28	50.28	0.00	1
763.29	52.65	52.65	0.00	1
763.35	54.51	54.51	0.00	1
763.41	56.37	56.37	0.00	1
763.46	58.24	58.24	0.00	1
763.52	60.10	60.10	0.00	1
763.58	61.96	61.96	0.00	1

Table 2 - Culvert Summary Table: Culvert AT STA. 243+52

Total Discharge (cfs)	Culvert Discharge (cfs)	Headwater Elevation (ft)	Inlet Control Depth (ft)	Outlet Control Depth (ft)	Flow Type	Normal Depth (ft)	Critical Depth (ft)	Outlet Depth (ft)	Tailwater Depth (ft)	Outlet Velocity (ft/s)	Tailwate Velocity (ft/s)
43.34	43.34	762.99	2.237	0.000	1-S2n	0.836	1.329	0.838	0.621	10.341	7.871
45.20	45.20	763.05	2.300	0.000	1-S2n	0.858	1.367	0.866	0.636	10.439	7.975
47.06	47.06	763.11	2.361	0.000	1-S2n	0.881	1.404	0.883	0.651	10.657	8.071
48.93	48.93	763.17	2.422	0.000	1-S2n	0.903	1.441	0.910	0.665	10.752	8.178
50.28	50.28	763.22	2.465	0.000	1-S2n	0.919	1.468	0.927	0.675	10.853	8.247
52.65	52.65	763.29	2.541	0.000	1-S2n	0.948	1.513	0.957	0.693	11.006	8.371
54.51	54.51	763.35	2.599	0.000	1-S2n	0.970	1.549	0.978	0.707	11.150	8.459
56.37	56.37	763.41	2.657	0.000	1-S2n	0.993	1.584	0.994	0.720	11.344	8.541
58.24	58.24	763.46	2.714	0.000	1-S2n	1.015	1.619	1.041	0.733	11.185	8.634
60.10	60.10	763.52	2.771	0.000	1-S2n	1.038	1.653	1.043	0.746	11.526	8.723
61.96	61.96	763.58	2.827	0.000	1-S2n	1.060	1.687	1.066	0.759	11.627	8.806

****

Inlet Elevation (invert): 760.75 ft, Outlet Elevation (invert): 758.25 ft

Culvert Length: 165.02 ft, Culvert Slope: 0.0152

****

Table 3 - Downstream Channel Rating Curve (Crossing: SH289-Culv H (Prop 1-5x4 MBC))

Flow (cfs)	Water Surface Elev (ft)	Depth (ft)	Velocity (ft/s)	Shear (psf)	Froude Number
43.34	758.87	0.62	7.87	2.95	1.94
45.20	758.89	0.64	7.97	3.02	1.94
47.06	758.90	0.65	8.07	3.09	1.95
48.93	758.92	0.67	8.18	3.16	1.95
50.28	758.93	0.68	8.25	3.21	1.96
52.65	758.94	0.69	8.37	3.29	1.96
54.51	758.96	0.71	8.46	3.36	1.97
56.37	758.97	0.72	8.54	3.42	1.97
58.24	758.98	0.73	8.63	3.48	1.98
60.10	759.00	0.75	8.72	3.54	1.98
61.96	759.01	0.76	8.81	3.60	1.99

Tailwater Channel Data - SH289-Culv H (Prop 1-5x4 MBC)

Tailwater Channel Option: Trapezoidal Channel
Bottom Width: 7.00 ft
Side Slope (H:V): 3.00 (_:1)
Channel Slope: 0.0761
Channel Manning's n: 0.0330
Channel Invert Elevation: 758.25 ft

Rating Curve Plot for Crossing: SH289-Culv H (Prop 1-5x4 MBC)

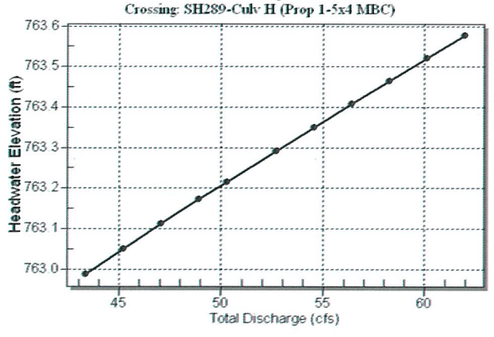

Water Surface Profile Plot for Culvert: Culvert AT STA. 243+52

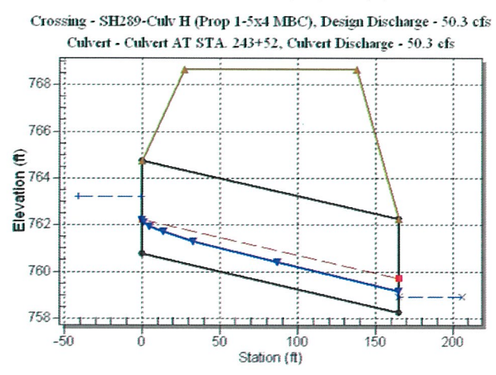

Tailwater Rating Curve Plot for Crossing: SH289-Culv H (Prop 1-5x4 MBC)

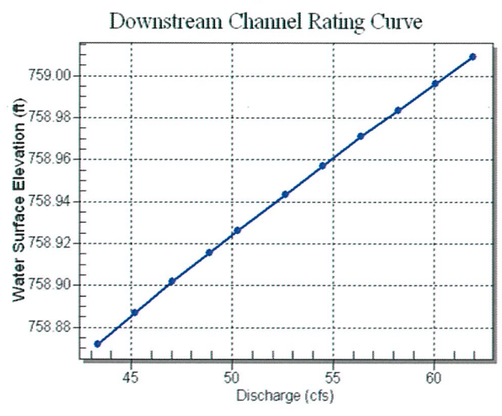

Culvert Notes: Culvert AT STA. 243+52

Culvert Performance Curve Plot: Culvert AT STA. 243+52

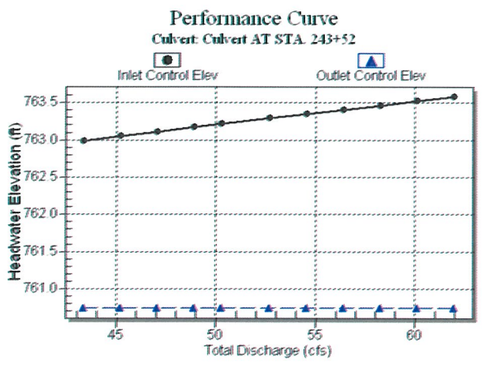

Site Data - Culvert AT STA. 243+52

Site Data Option: Culvert Invert Data
Inlet Station: 0.00 ft
Inlet Elevation: 760.75 ft
Outlet Station: 165.00 ft
Outlet Elevation: 758.25 ft
Number of Barrels: 1

Culvert Data Summary - Culvert AT STA. 243+52

Barrel Shape: Concrete Box
Barrel Span: 5.00 ft
Barrel Rise: 4.00 ft
Barrel Material: Concrete
Barrel Manning's n: 0.0130
Inlet Type: Conventional
Inlet Edge Condition: Square Edge (90°) Headwall
Inlet Depression: None

Roadway Data for Crossing: SH289-Culv H (Prop 1-5x4 MBC)

Roadway Profile Shape: Irregular Roadway Shape (coordinates)
Irregular Roadway Cross-Section:

Coord No.	Station (ft)	Elevation (ft)
1	-200.00	768.64
2	-100.00	769.80
3	0.00	770.97
4	100.00	772.14
5	200.00	773.31

Roadway Surface: Paved
Roadway Top Width: 110.00 ft

STATE OF TEXAS
HASSAN SAM MOGHADASSI
84231
LICENSED
PROFESSIONAL ENGINEER

H. Moghadassi, P.E. 07/12/11
Signature of Registrant & Date

Culvert H Layout.dgn

Texas Department of Transportation
© 2011

SH 289
CULVERT "H" LAYOUT
DRAINAGE CALCULATIONS

Sheet 2 of 3

DESIGN	FED.RD. DIV.NO.	STATE PROJECT NO.		HIGHWAY NO.
SDHM	6	SEE TITLE SHEET		SH 289
GRAPHICS OE	STATE	DISTRICT	COUNTY	SHEET NO.
CHECK SM	TEXAS	DALLAS	COLLIN	291
CHECK	CONTROL	SECTION	JOB	
	0091	03	P-201107-01	

7/11/2011
I:\dalgm*s\sh289\design\sheets\drng\CULVERT LAYOUT H\Culvert H Layout.dgn
...\Culvert H Layout.dgn

TXDOT
40.0000 ft / IN.

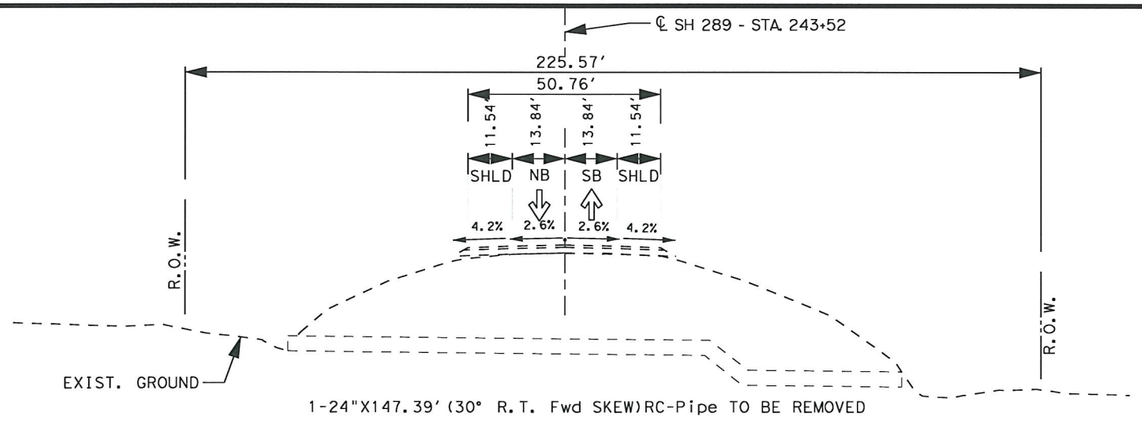

TYPICAL SECTION - EXISTING STRUCTURE

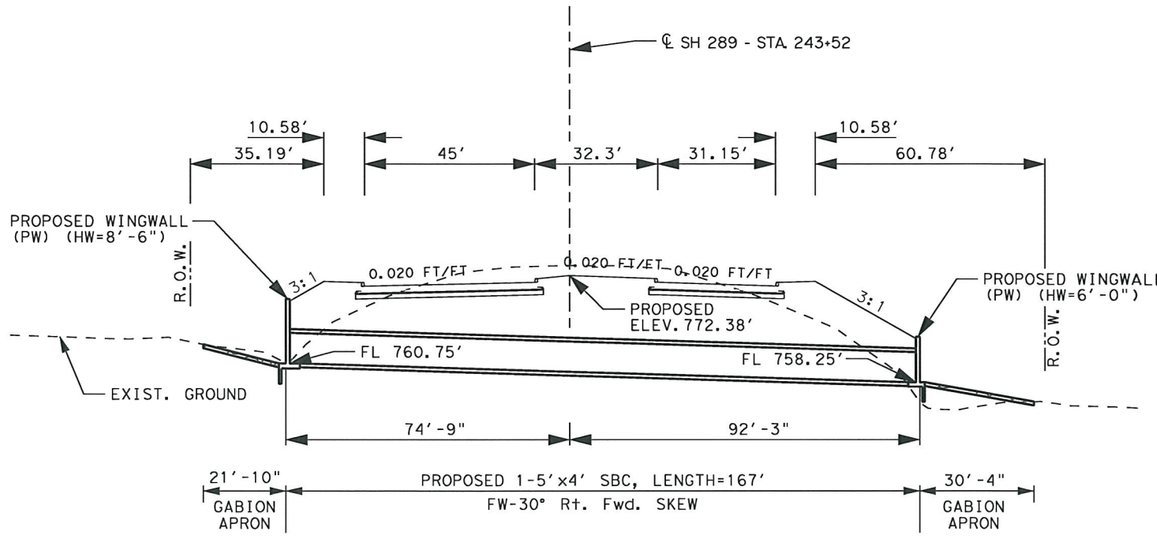

TYPICAL SECTION - COMPLETED STRUCTURE

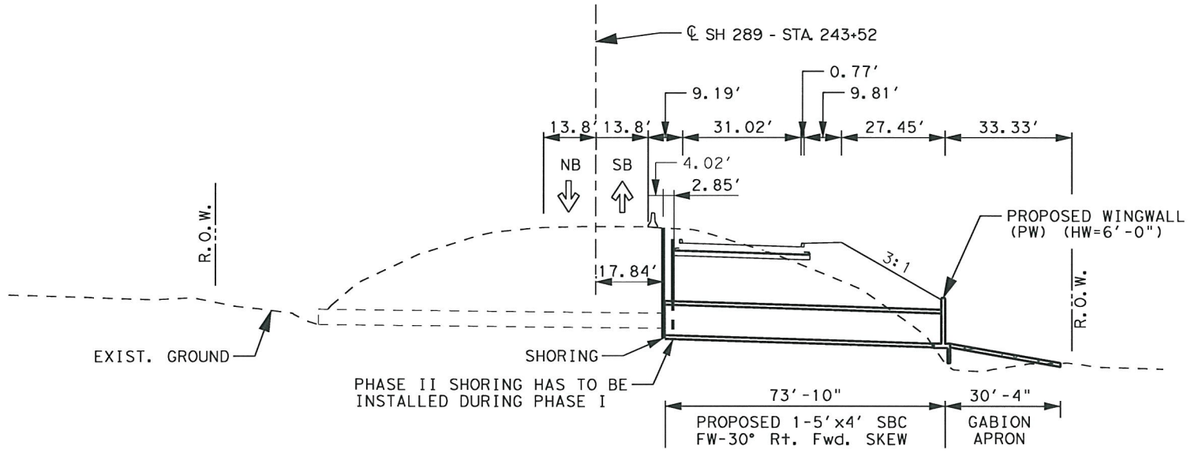

TYPICAL SECTION - PHASE 1 CONSTRUCTION (SOUTH BOUND)

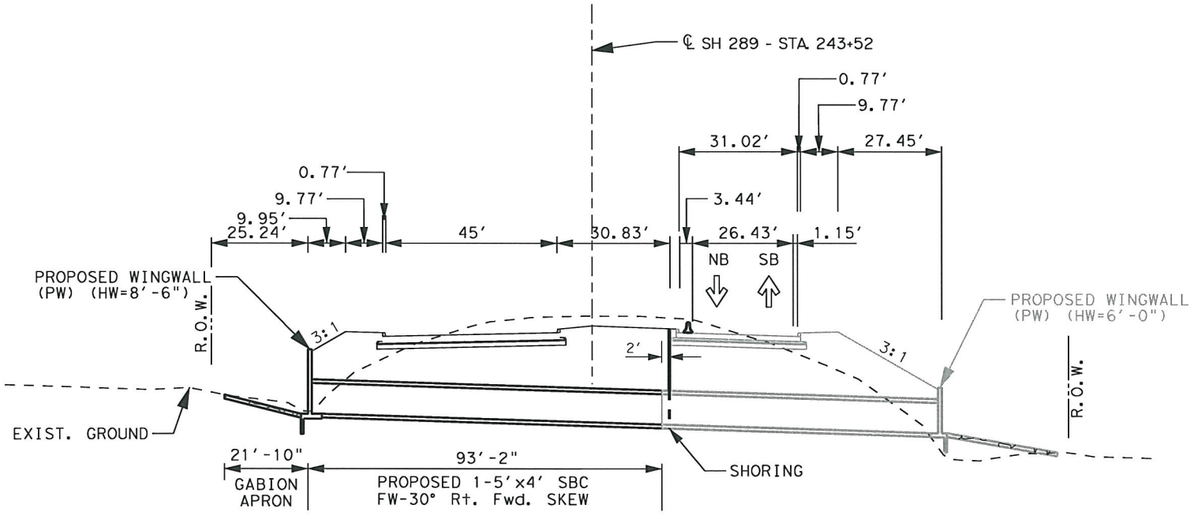

TYPICAL SECTION - PHASE 2 CONSTRUCTION (NORTH BOUND)

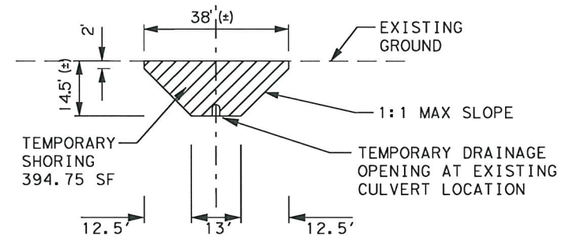

TEMPORARY SHORING PHASE 1

TABLE OF QUANTITIES

BID ITEMS	DESCRIPTION	QUANTITY	UNIT
403-2001	TEMPORARY SPL SHORING	737.75	SF

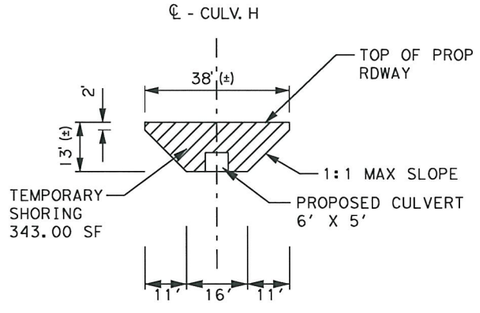

TEMPORARY SHORING PHASE 2

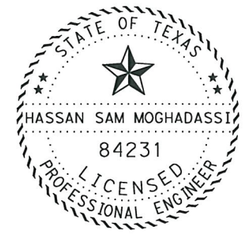

H. Moghadassi, P.E. 07/12/11
Signature of Registrant & Date

Culvert H Layout.dgn

Texas Department of Transportation
© 2011

SH 289
CULVERT H, UNKNOWN TRIB
LITTLE ELM CREEK
PHASE CONSTRUCTION

NOT TO SCALE — Sheet 3 of 3

DESIGN	FED. RD. DIV. NO.			HIGHWAY NO.
OE	6	SEE TITLE SHEET		SH 289
GRAPHICS	STATE	DISTRICT	COUNTY	SHEET NO.
OE	TEXAS	DALLAS	COLLIN	
CHECK	CONTROL	SECTION	JOB	292
SM	0091	03		
CHECK			P-201107-01	

...\Culvert H Layout.dgn

7/11/2011
I:\dal\dgn\s\sh289\design\sheets\drng\CULVERT LAYOUT H\Culvert H Layout.dgn

TXDOT
40.0000 ft / IN.

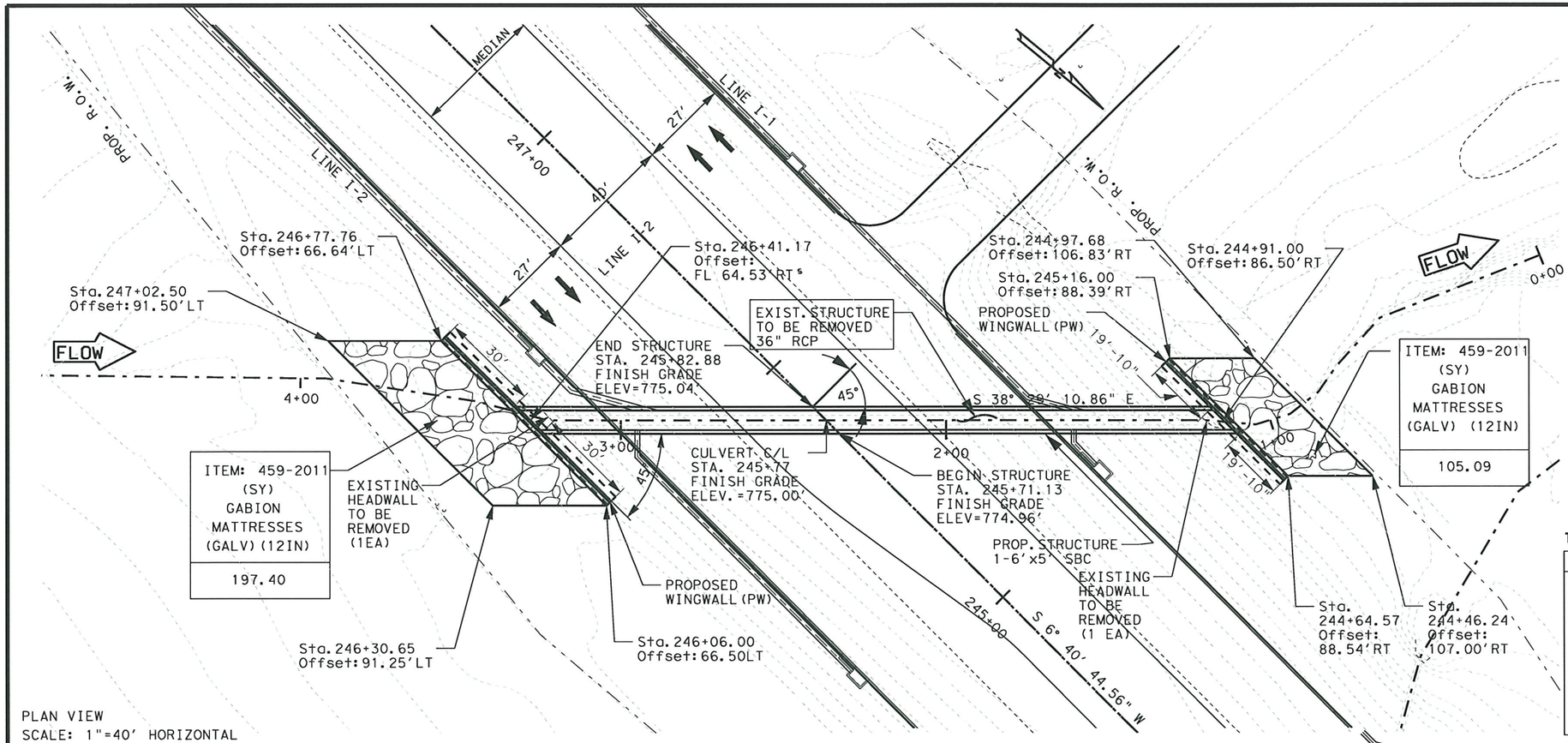

PLAN VIEW
SCALE: 1"=40' HORIZONTAL

PROPOSED HYDRAULIC DATA - DRAINAGE AREA = 185.89 ACRES			
25 YR Culvert Output		100 YR Culvert Output	
Q CulvGroup (CFS)	98.90	Q CulvGroup (CFS)	122.00
# Barrels (6'x5')	1.00	# Barrels (6'x5')	1.00
Q Barrels (cfs)	98.90	Q Barrels (cfs)	122.00
TW VEL (FPS)	8.67	TW VEL (FPS)	9.27
WS US (ft)	764.91	WS DS (ft)	765.40
WS DS (ft)	757.47	WS DS (ft)	757.63

REQUIRED STANDARDS:

1. PW: PARALLEL WINGS SKEWED/NON SKEWED
2. SCP-6: SINGLE BOX CULVERTS PRECAST
3. SCP-MD: PRECAST MISCELLANEOUS DETAILS
4. BCS: SUPPLEMENT WING AND END TREATMENT

TABLE OF QUANTITIES

BID ITEMS	DESCRIPTION	QUANTITY	UNIT
402-2001	TRENCH EXCAVATION PROTECTION	215.00	FT
459-2011	GABION MATTRESS (12") (GALV.)	302.49	SY
462-2012	CONC BOX CULV (6 FT X 5 FT)	215.00	FT
466-2052	WINGWALL (PW) (HW=8'-0")	2	EA
496-2006	REMOV STR (HEADWALL)	2	EA
496-2007	REMOV STR (PIPE)	1	EA

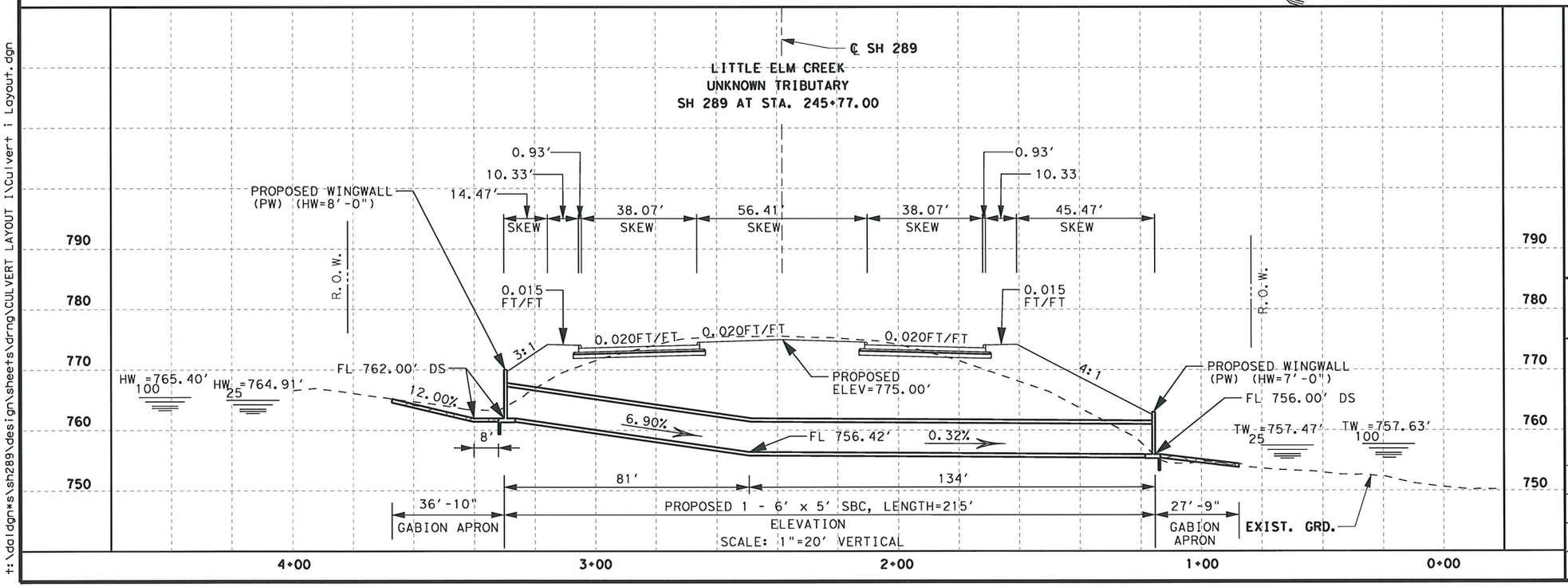

STATE OF TEXAS
HASSAN SAM MOGHADASSI
84231
LICENSED
PROFESSIONAL ENGINEER

H. Moghadassi, P.E. 07/12/11
Signature of Registrant & Date

Culvert I Layout.dgn

Texas Department of Transportation
© 2011

SH 289
CULVERT "I" LAYOUT
LITTLE ELM CREEK
UNKNOWN TRIBUTARY

SCALE: 1"= 40 H

Sheet 1 of 3

DESIGN	FED. RD. DIV. NO.	STATE PROJECT NO.		HIGHWAY NO.
OE	6	SEE TITLE SHEET		SH 289
GRAPHICS	STATE	DISTRICT	COUNTY	SHEET NO.
OE	TEXAS	DALLAS	COLLIN	
CHECK	CONTROL	SECTION	JOB	293
SM	0091	03		
CHECK				

P-201107-01

...\Culvert I Layout.dgn

7/11/2011
I:\dgn\s\sh289\design\sheets\drng\CULVERT LAYOUT I\Culvert I Layout.dgn

TXDOT
20.0000 ft / IN.

BROKEN BACK CULVERT ANALYSIS REPORT

NEBRASKA DEPARTMENT OF ROADS
Broken-Back Culvert Analysis Program (BCAP)

Project: SH289-Culv I (Prop 1-6'x5' SBC)
Station or Location: 245+77
Date: 06/24/2011

Discharge cfs	Headwater Depth ft	Inlet Control Elevation ft	Break Control Elevation ft	Critical Depth ft	Outlet Depth ft	Outlet Velocity ft/s	Outlet Froude Number	Tailwater Depth ft	Tailwater Velocity ft/s	Hydraulic Jump
85.3	2.60	764.60	.00	1.84	1.84	7.71	1.0	1.15	8.36	YES
89.0	2.68	764.68	.00	1.90	1.90	7.82	1.0	1.19	8.33	YES
92.6	2.77	764.77	.00	1.95	1.95	7.92	1.0	1.21	8.49	YES
98.9	2.91	764.91	.00	2.04	1.47	11.21	1.6	1.25	8.67	NO
100.0	2.93	764.93	.00	2.05	1.48	11.26	1.6	1.25	8.77	NO
103.7	3.01	765.01	.00	2.10	1.51	11.44	1.6	1.29	8.71	NO
107.3	3.09	765.09	.00	2.15	1.53	11.69	1.7	1.31	8.84	NO
111.0	3.17	765.17	.00	2.20	1.56	11.86	1.7	1.33	8.95	NO
114.7	3.25	765.25	.00	2.25	1.58	12.10	1.7	1.35	9.06	NO
118.3	3.32	765.32	.00	2.29	1.61	12.25	1.7	1.37	9.17	NO
122.0	3.40	765.40	.00	2.34	1.63	12.47	1.7	1.39	9.27	NO

NEBRASKA DEPARTMENT OF ROADS
Broken-Back Culvert Analysis Program (BCAP)

PROJECT INFO
Project: SH289-Culv I (Prop 1-6'x5' SBC)
Station or Location: 245+77
Date: 06/24/2011

CULVERT DATA
Discharge: 98.9 cfs
Shape: Box
Material: Concrete
Size: 1-6.0 ft x 5.0 ft
Inlet Type: Headwall, 1:1 Bevel

WATER SURFACE PROFILE
Inlet Depth: 5.00 ft
Inlet Velocity: 3.30 ft/s
Upper Break Depth: 2.34 ft
Upper Break Velocity: 7.04 ft/s
Lower Break Depth: 0.96 ft
Lower Break Velocity: 17.17 ft/s
Depth at End of Hydraulic Jump: N/A ft
Velocity at End of Hydraulic Jump: N/A ft/s
Depth at End of Hydraulic Jump: 1.25 ft
Velocity at End of Hydraulic Jump: 8.67 ft/s

OUTPUT DATA
Head Water Depth: 2.91 ft
Inlet Control Elevation: 764.91 ft
Break Control Elevation: N/A ft
Critical Depth: 2.04 ft
Tailwater Depth: 1.25 ft
Hydraulic Jump? NO
Outlet Depth: 1.47 ft
Outlet Velocity: 11.21 ft/s
Outlet Froude No.: 1.6

Project: SH289-Culv I (Prop 1-6'x5' SBC) Location: 245+77 Date: 06/24/2011

Concrete Box Culvert
Span (per barrel)= 6 ft
Rise= 5 ft

Inlet Type
Headwall, 1:1 Bevel
Rough. Coeff.= 0.013
Outlet Sec. Rough. Coeff.= 0.013

Q = 98.9 cfs

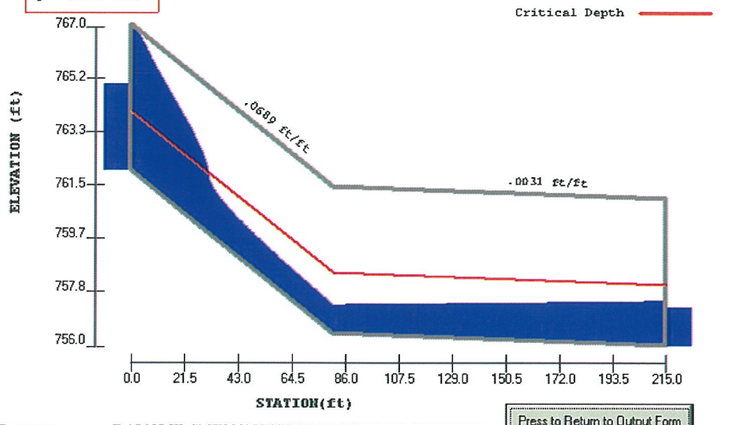

Source: T:\DALDGN_S\SH289\DESIGN\DRAINAGE\HYDRAULICS\BCAP\...AK.BCP

Press to Return to Output Form

NEBRASKA DEPARTMENT OF ROADS
Broken-Back Culvert Analysis Program (BCAP)

PROJECT INFO
Project: SH289-Culv I (Prop 1-6'x5' SBC)
Station or Location: 245+77
Date: 06/24/2011

CULVERT DATA
Discharge: 122.0 cfs
Shape: Box
Material: Concrete
Size: 1-6.0 ft x 5.0 ft
Inlet Type: Headwall, 1:1 Bevel

WATER SURFACE PROFILE
Inlet Depth: 5.00 ft
Inlet Velocity: 4.07 ft/s
Upper Break Depth: 2.34 ft
Upper Break Velocity: 8.68 ft/s
Lower Break Depth: 1.12 ft
Lower Break Velocity: 18.16 ft/s
Depth at End of Hydraulic Jump: N/A ft
Velocity at End of Hydraulic Jump: N/A ft/s
Depth at End of Hydraulic Jump: 1.39 ft
Velocity at End of Hydraulic Jump: 9.27 ft/s

OUTPUT DATA
Head Water Depth: 3.40 ft
Inlet Control Elevation: 765.40 ft
Break Control Elevation: N/A ft
Critical Depth: 2.34 ft
Tailwater Depth: 1.39 ft
Hydraulic Jump? NO
Outlet Depth: 1.63 ft
Outlet Velocity: 12.47 ft/s
Outlet Froude No.: 1.7

Project: SH289-Culv I (Prop 1-6'x5' SBC) Location: 245+77 Date: 06/24/2011

Concrete Box Culvert
Span (per barrel)= 6 ft
Rise= 5 ft

Inlet Type
Headwall, 1:1 Bevel
Rough. Coeff.= 0.013
Outlet Sec. Rough. Coeff.= 0.013

Q = 122 cfs

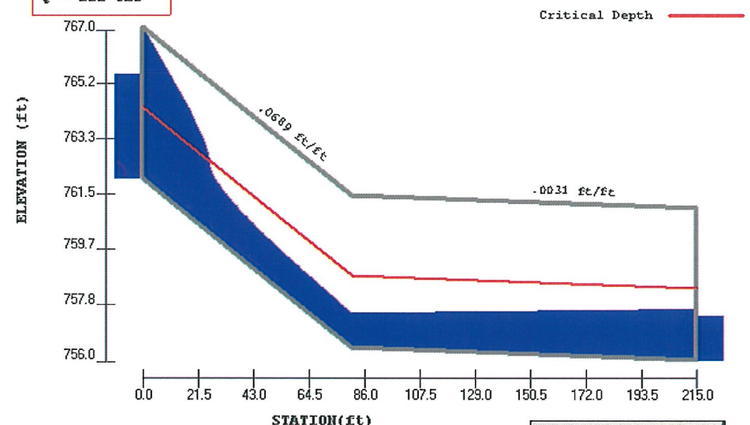

Source: T:\DALDGN_S\SH289\DESIGN\DRAINAGE\HYDRAULICS\BCAP\...AK.BCP

Press to Return to Output Form

H. Moghadassi, P.E. 07.12.11
Signature of Registrant & Date

Culvert I Layout.dgn

Texas Department of Transportation
© 2011

SH 289
CULVERT "I" LAYOUT
DRAINAGE CALCULATIONS

Sheet 1 of 3

DESIGN	FED.RD. DIV.NO.	STATE PROJECT NO.		HIGHWAY NO.
OE	6	SEE TITLE SHEET		SH 289
GRAPHICS OE	STATE	DISTRICT	COUNTY	SHEET NO.
CHECK SM	TEXAS	DALLAS	COLLIN	294
CHECK	CONTROL	SECTION	JOB	
	0091	03	P-201107-01	

...\Culvert I Layout.dgn

7/11/2011
t:\dalgm*s\sh289\design\sheets\drng\CULVERT LAYOUT I\Culvert I Layout.dgn

TXDOT
40.0000 ft / IN.

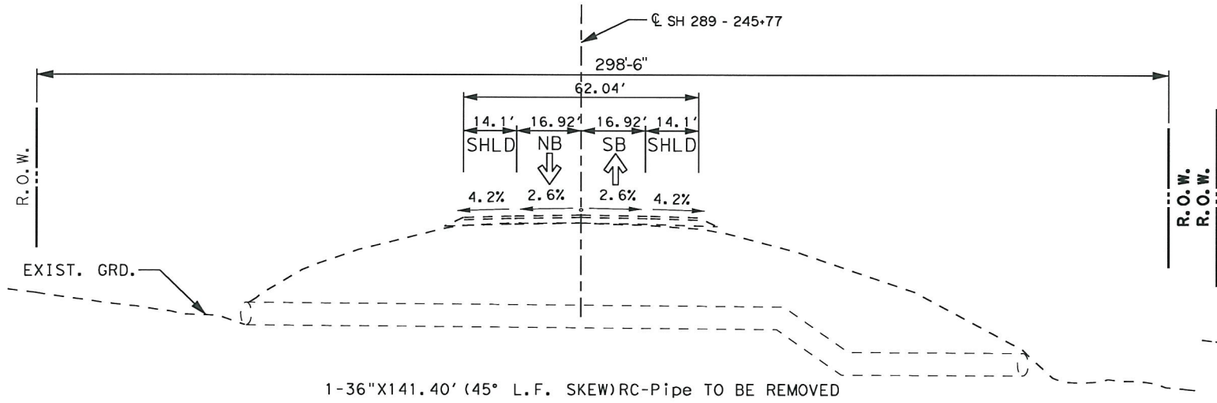

TYPICAL SECTION - EXISTING STRUCTURE

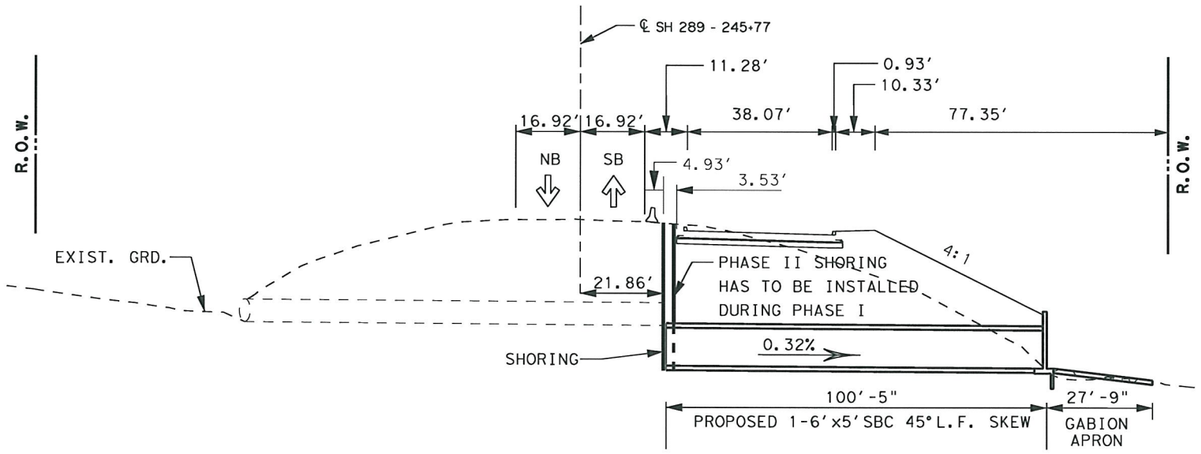

TYPICAL SECTION - PHASE 1 CONSTRUCTION (SOUTH BOUND)

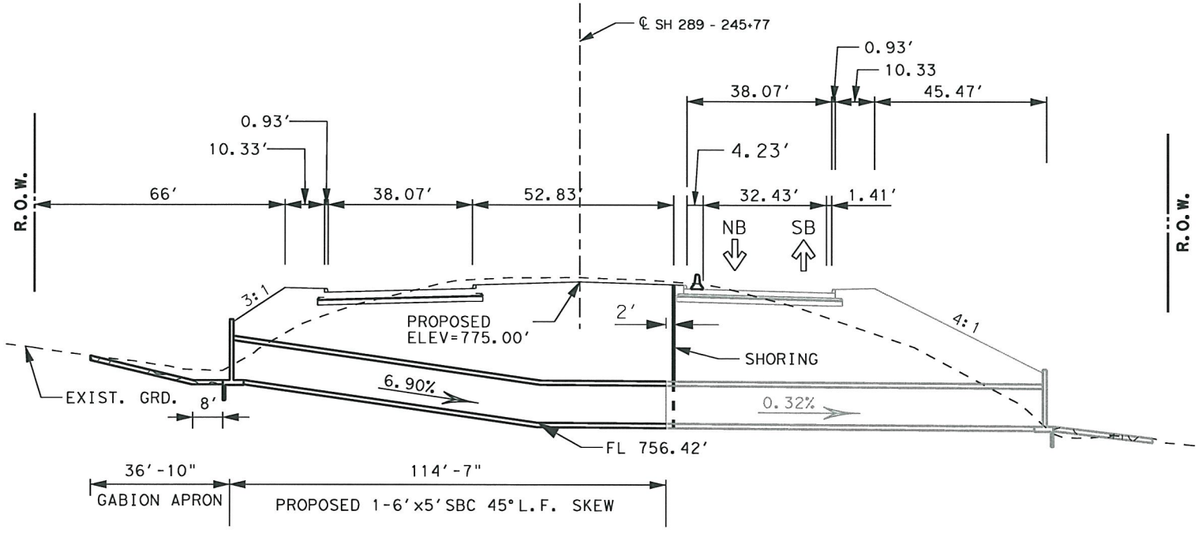

TYPICAL SECTION - PHASE 2 CONSTRUCTION (NORTH BOUND)

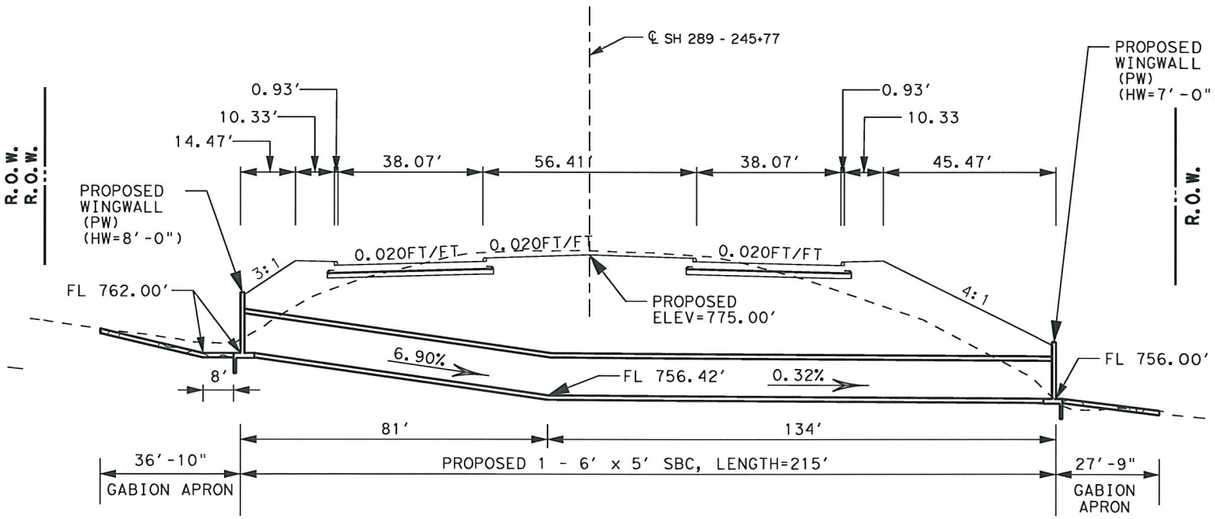

TYPICAL SECTION - COMPLETED STRUCTURE

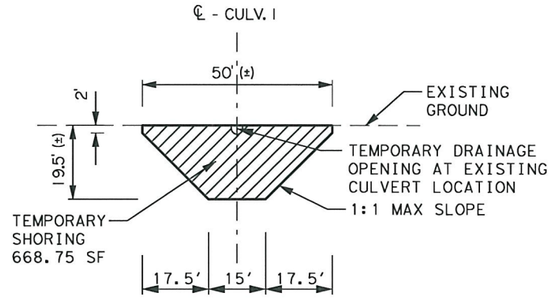

TEMPORARY SHORING PHASE 1

TABLE OF QUANTITIES

BID ITEMS	DESCRIPTION	QUANTITY	UNIT
403-2001	TEMPORARY SPL SHORING	1285.55	SF

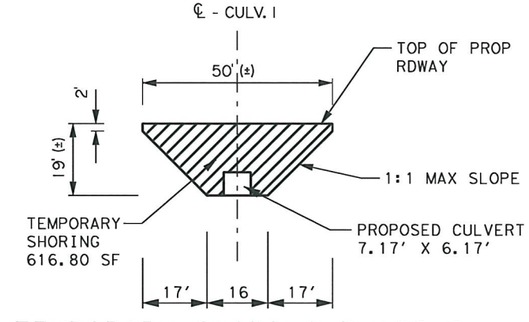

TEMPORARY SHORING PHASE 2

STATE OF TEXAS
HASSAN SAM MOGHADASSI
84231
LICENSED
PROFESSIONAL ENGINEER

H.Moghadassi, P.E. 07.12.11
Signature of Registrant & Date

Culvert I Layout.dgn

Texas Department of Transportation
© 2011

SH 289
CULVERT I, UNKNOWN TRIB
LITTLE ELM CREEK
PHASE CONSTRUCTION

NOT TO SCALE — Sheet 3 of 3

DESIGN	FED.RD. DIV.NO.			HIGHWAY NO.
OE	6	SEE TITLE SHEET		SH 289
GRAPHICS	STATE	DISTRICT	COUNTY	SHEET NO.
OE	TEXAS	DALLAS	COLLIN	
CHECK	CONTROL	SECTION	JOB	295
SM	0091	03	P-201107-01	
CHECK				

7/11/2011
t:\dal\dgn\s\sh289\design\sheets\drng\CULVERT LAYOUT I\Culvert i Layout.dgn
...\Culvert i Layout.dgn

TXDOT
100.0000 ft / IN.

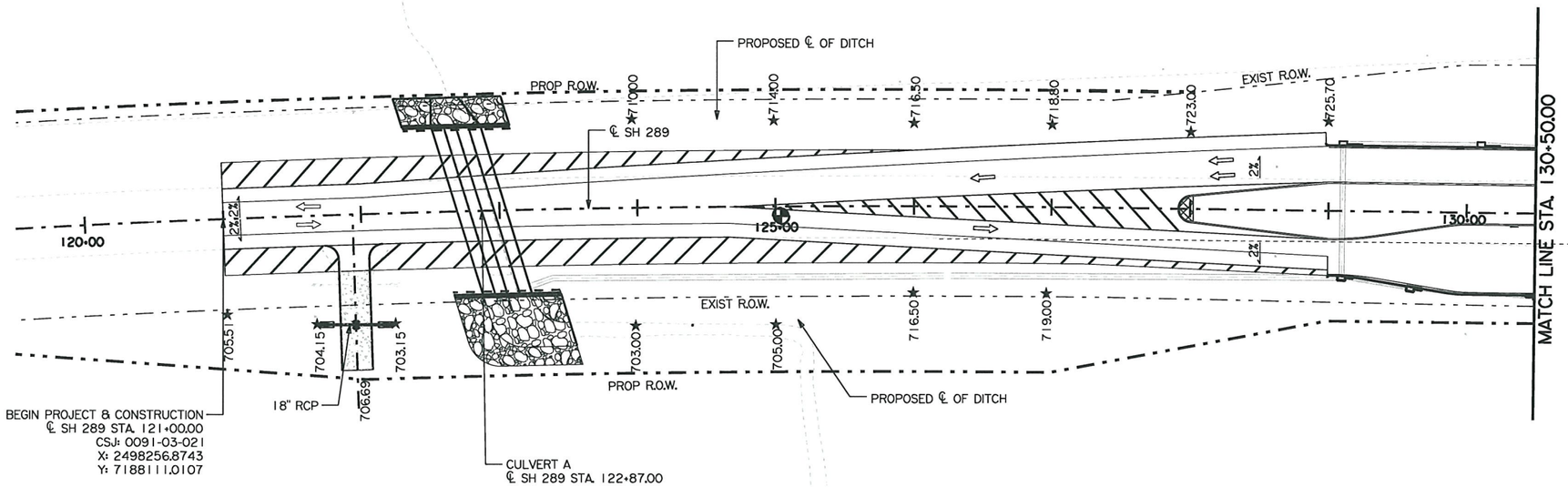

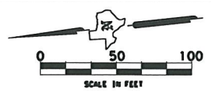

LEGEND

- FLOW DIRECTION
- ★ PROPOSED DITCH ELEVATION
- ✖ PROPOSED DRWY. ELEVATION

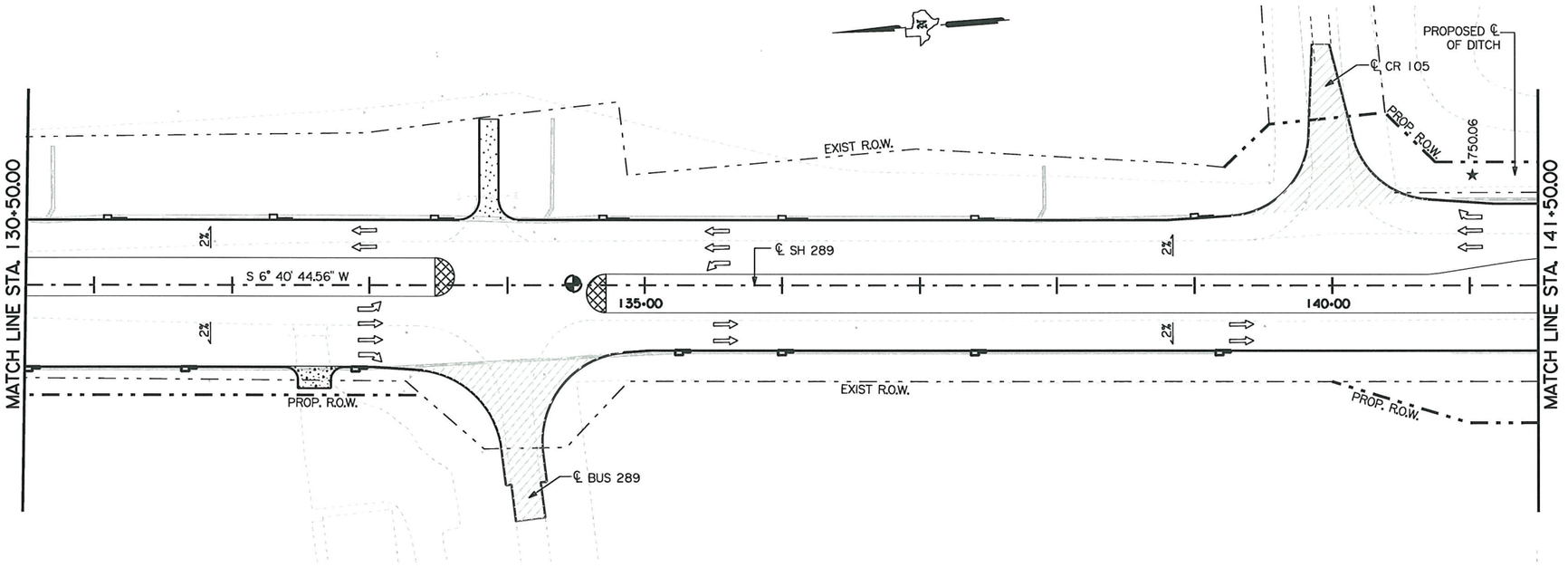

HASSAN SAM MOGHADASSI
84231
LICENSED PROFESSIONAL ENGINEER
STATE OF TEXAS

H. Moghadassi, P.E. 07/12/11
Signature of Registrant & Date

Ditchlayout*01.dgn

Texas Department of Transportation
© 2011

SH 289
FM 455 TO N BUS 289C
DITCH LAYOUT

SCALE: HORIZ: 1"=100' SHEET 1 OF 4

DESIGN	FED.RD. DIV.NO.	STATE PROJECT NO.		HIGHWAY NO.
SHM	6	SEE TITLE SHEET		SH 289
GRAPHICS	STATE	DISTRICT	COUNTY	SHEET NO.
OE	TEXAS	DALLAS	COLLIN	
CHECK SM	CONTROL	SECTION	JOB	296
CHECK	0091	03		

P-201107-01

...\Ditchlayout*01.dgn

7/11/2011
t:\dalgn*s\sh289\design\sheets\drng\ditch layout\Ditchlayout*01.dgn

TXDOT
100.0000 ft / IN.

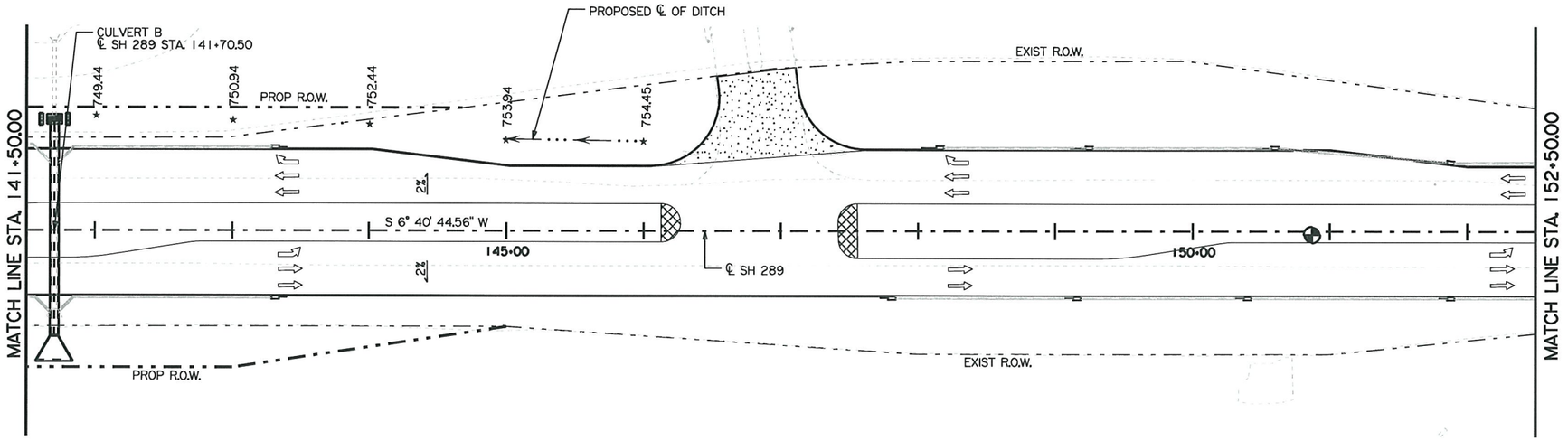

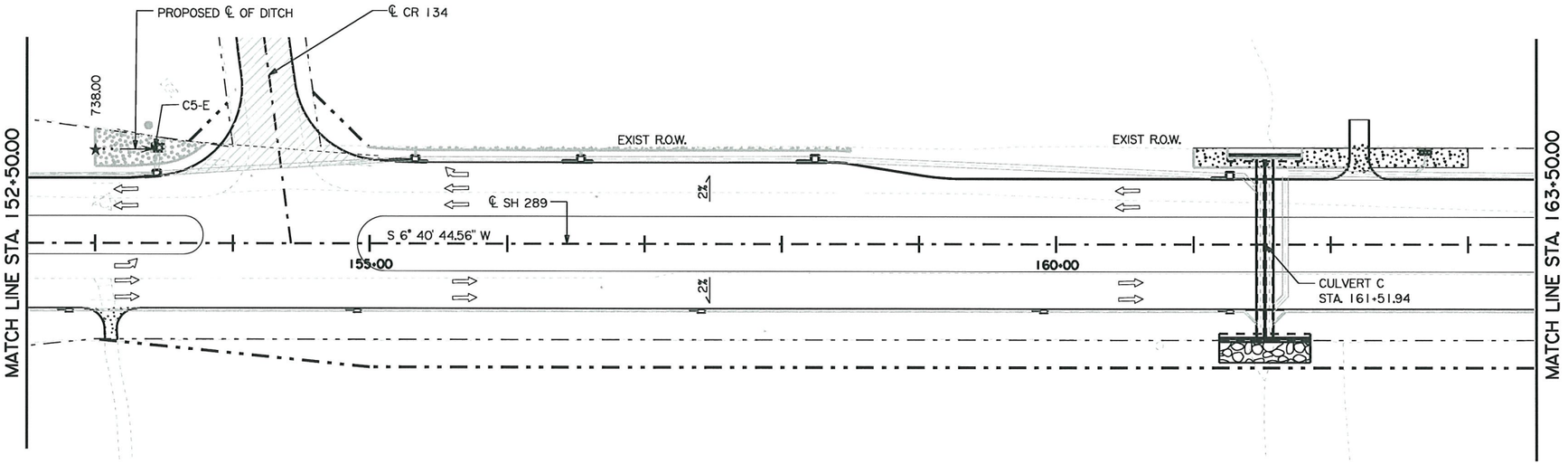

0 50 100
SCALE IN FEET

LEGEND

- ←···· FLOW DIRECTION
- ★ PROPOSED DITCH ELEVATION
- ✖ PROPOSED DRWY. ELEVATION

STATE OF TEXAS
HASSAN SAM MOGHADASSI
84231
LICENSED
PROFESSIONAL ENGINEER

H. Moghadassi , P.E. 07/12/11
Signature of Registrant & Date

Ditchlayout*02.dgn

Texas Department of Transportation
© 2011

SH 289
FM 455 TO N BUS 289C
DITCH LAYOUT

SCALE: HORIZ: 1"=100' SHEET 2 OF 4

DESIGN	FED. RD. DIV. NO.	STATE PROJECT NO.		HIGHWAY NO.
SHM	6	SEE TITLE SHEET		SH 289
GRAPHICS OE	STATE	DISTRICT	COUNTY	SHEET NO.
CHECK SM	TEXAS	DALLAS	COLLIN	297
CHECK	CONTROL	SECTION	JOB	
	0091	03	P-201107-01	

...\Ditchlayout*02.dgn

7/11/2011
I:\dal\dgn*s\sh289\design\sheets\drng\ditch layout\Ditchlayout*02.dgn

TXDOT
100.0000 ft / IN.

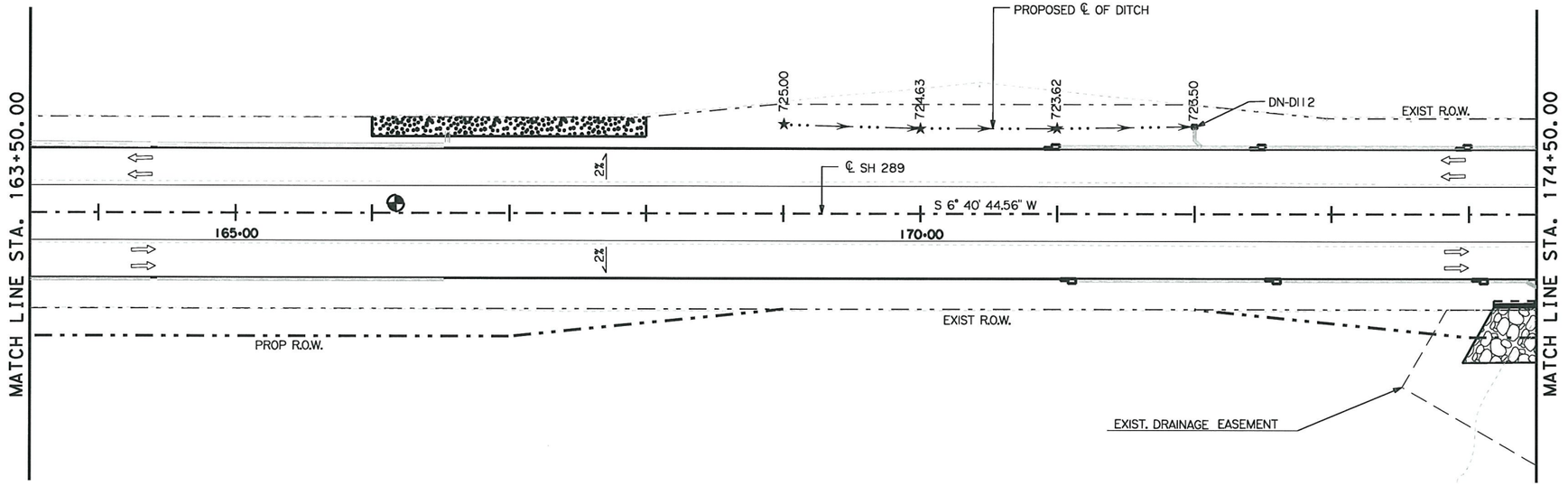

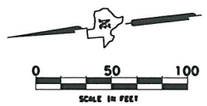

LEGEND

- FLOW DIRECTION
- PROPOSED DITCH ELEVATION
- PROPOSED DRWY. ELEVATION
- CONCRETE RIPRAP

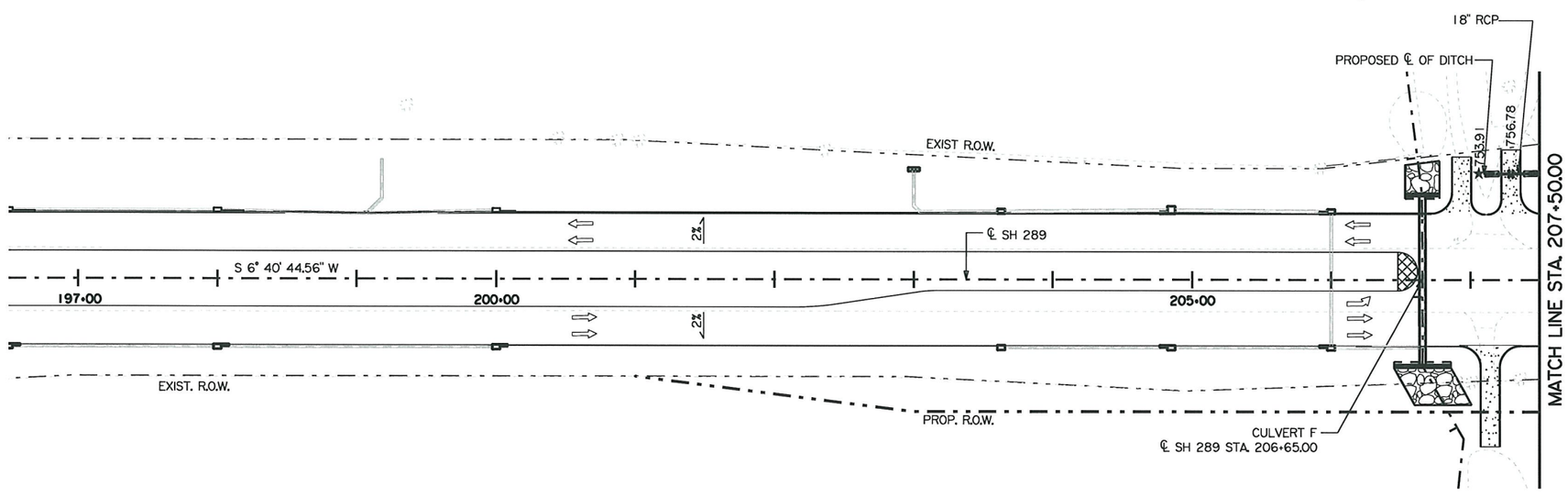

STATE OF TEXAS
HASSAN SAM MOGHADASSI
84231
LICENSED
PROFESSIONAL ENGINEER

H. Moghadassi , P.E. 07/12/11
Signature of Registrant & Date

Ditchlayout*03.dgn

Texas Department of Transportation
© 2011

SH 289
FM 455 TO N BUS 289C
DITCH LAYOUT

SCALE: HORIZ: 1"=100' SHEET 3 OF 4

DESIGN	FED. RD. DIV. NO.	STATE PROJECT NO.		HIGHWAY NO.
SHM	6	SEE TITLE SHEET		SH 289
GRAPHICS	STATE	DISTRICT	COUNTY	SHEET NO.
OE	TEXAS	DALLAS	COLLIN	
CHECK	CONTROL	SECTION	JOB	298
SM	0091	03	P-201107-01	
CHECK				

...\Ditchlayout*03.dgn

7/11/2011
I:\dal\dgn\s\sh289\design\sheets\drng\ditch layout\Ditchlayout*03.dgn

TXDOT
100.0000 ft / IN.

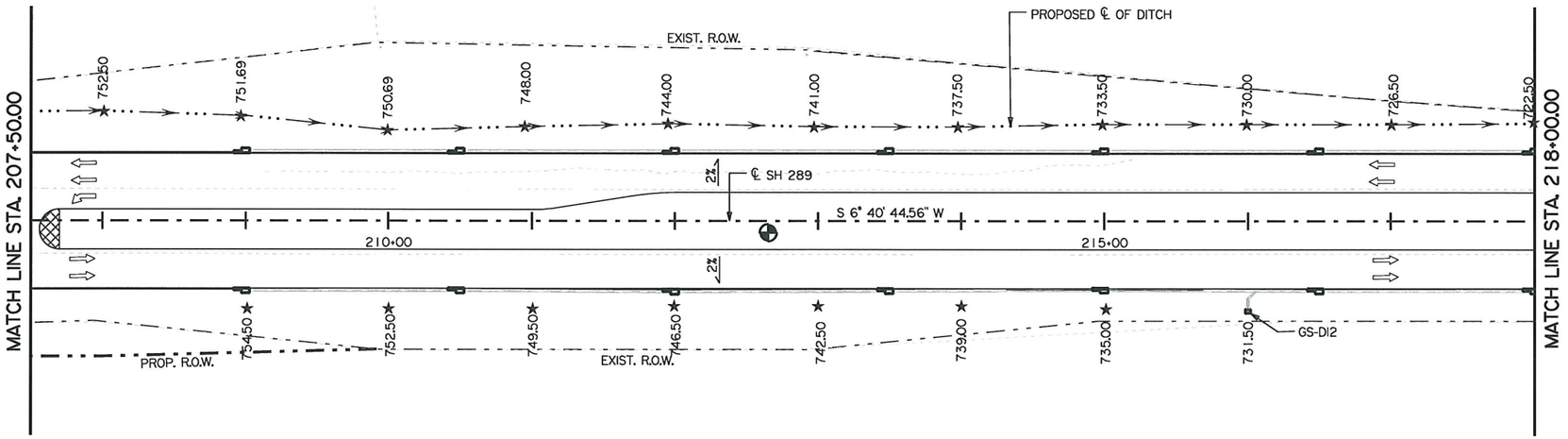

0 50 100
SCALE IN FEET

LEGEND

- FLOW DIRECTION
- ★ PROPOSED DITCH ELEVATION
- ✖ PROPOSED DRWY. ELEVATION

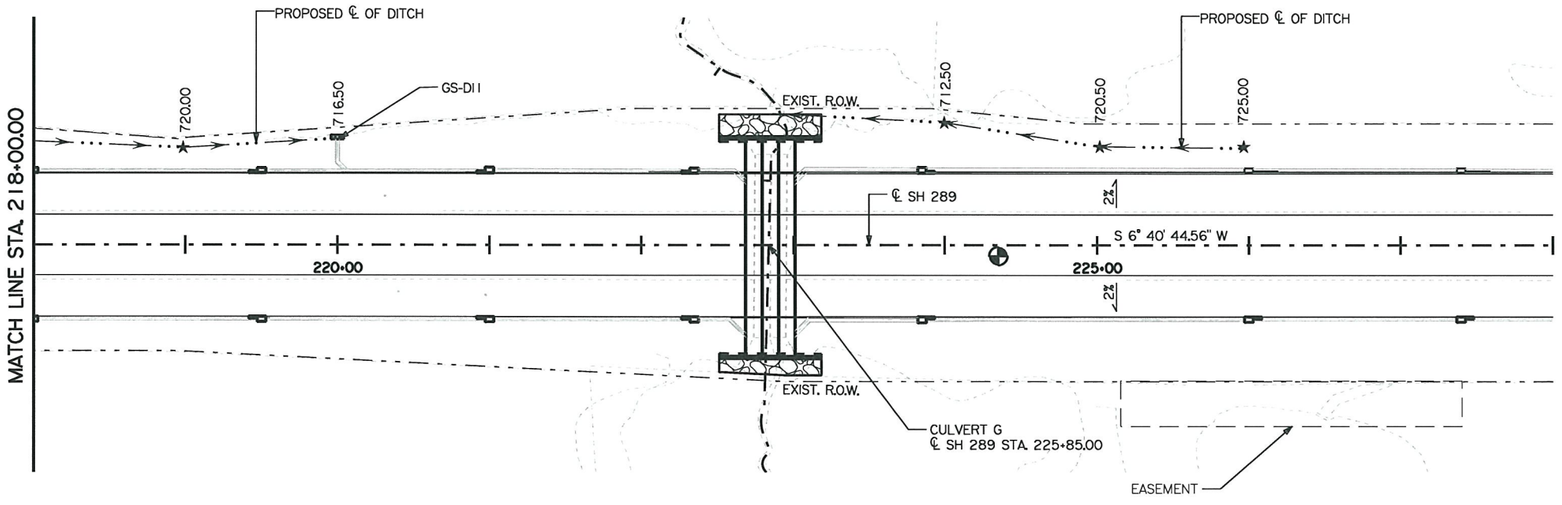

STATE OF TEXAS
HASSAN SAM MOGHADASSI
84231
LICENSED
PROFESSIONAL ENGINEER

H. Moghadassi ,P.E. 07/12/11
Signature of Registrant & Date

Ditchlayout*04.dgn

Texas Department of Transportation
© 2011

SH 289
FM 455 TO N BUS 289C
DITCH LAYOUT

SCALE: HORIZ: 1"=100' SHEET 4 OF 4

DESIGN	FED.RD. DIV.NO.	STATE PROJECT NO.		HIGHWAY NO.
SHM	6	SEE TITLE SHEET		SH 289
GRAPHICS	STATE	DISTRICT	COUNTY	SHEET NO.
OE	TEXAS	DALLAS	COLLIN	
CHECK	CONTROL	SECTION	JOB	
SM	0091	03		299
CHECK				

P-201107-01

7/11/2011
t:\dal\dgn*s\sh289\design\sheets\drng\ditch layout\Ditchlayout*04.dgn
...\Ditchlayout*04.dgn

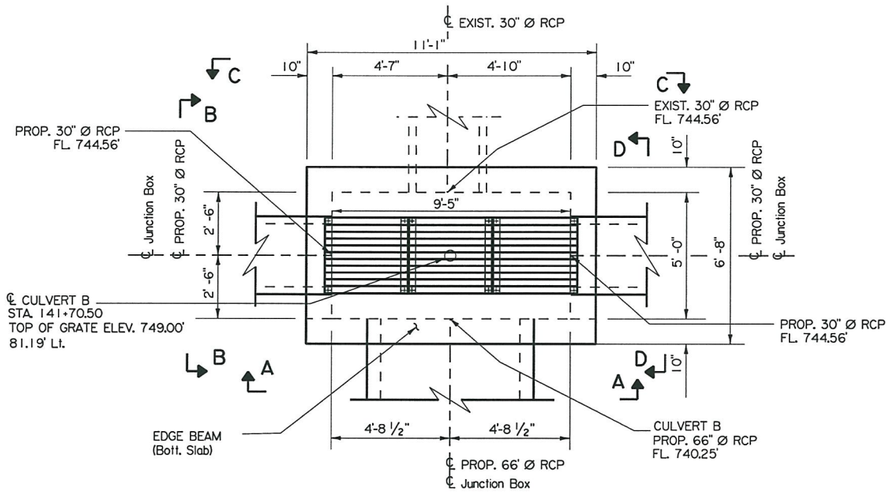

PLAN

Scale 3/16" = 1' - 0"

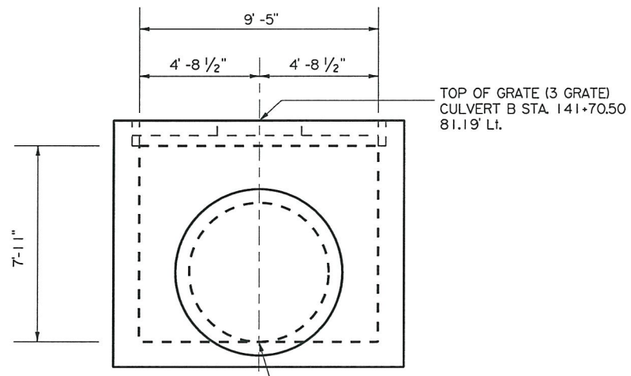

ELEVATION A-A

Scale 3/16" = 1' - 0"

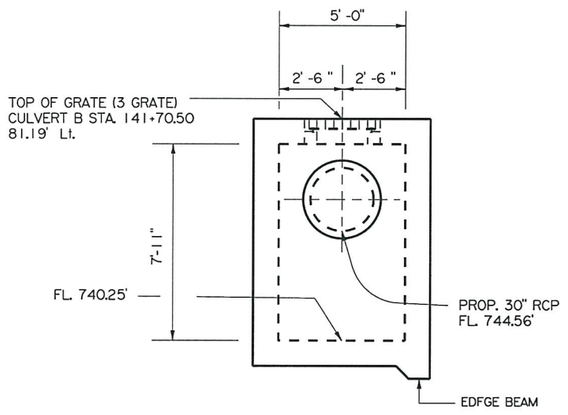

ELEVATION B-B

Scale 3/16" = 1' - 0"

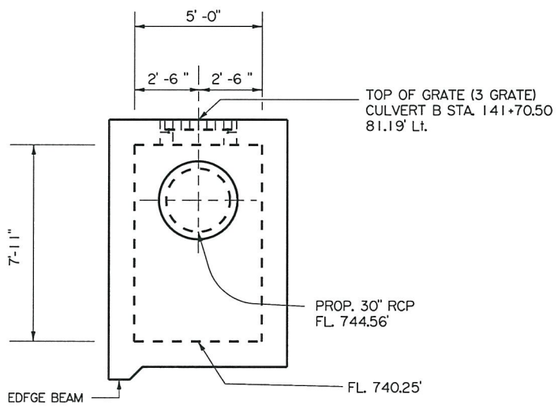

ELEVATION D-D

Scale 3/16" = 1' - 0"

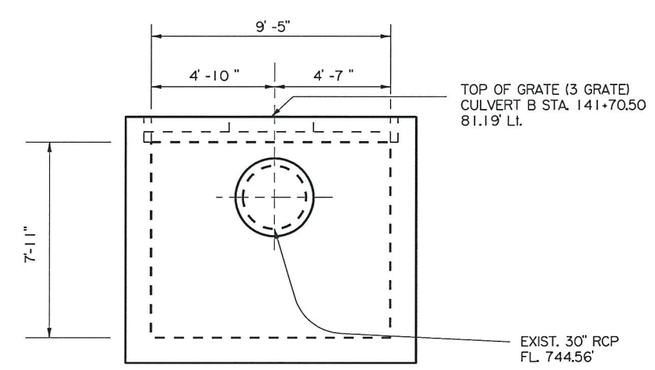

ELEVATION C-C

Scale 3/16" = 1' - 0"

STATE OF TEXAS
K. A. MENSAH
67081
LICENSED
PROFESSIONAL ENGINEER
8/17/11

Sheet 1 of 4 Sheets

Texas Department of Transportation

© 2011

SH 289
JUNCTION BOX B
LAYOUT

SCALE: 1"= 6'

DESIGN	FED. RD. DIV. NO.	FEDERAL AID PROJECT NO.		HIGHWAY NO.
CR	6	SEE TITLE SHEET		SH 289
GRAPHICS CR	STATE	DISTRICT	COUNTY	SHEET NO.
CHECK SHM	TEXAS	DALLAS	COLLIN	300
CHECK	CONTROL	SECTION	JOB	
	0091	03	P-201107-01	

DATE: 8/17/2011 TIME: 1:38:01 PM FILE: T:\DALBRDG\Inlet& Culvert\sh289-boxB\Junction Box B Layout.dgn User: mbansko

LEVELS DISPLAYED
1 2 3 4 5 6 7 8
9 10 11 12 13 14 15 16
17 18 19 20 21 22 23 24
25 26 27 28 29 30 31 32
33 34 35 36 37 38 39 40
41 42 43 44 45 46 47 48
49 50 51 52 53 54 55 56
57 58 59 60 61 62 63

$FILEABBREV$

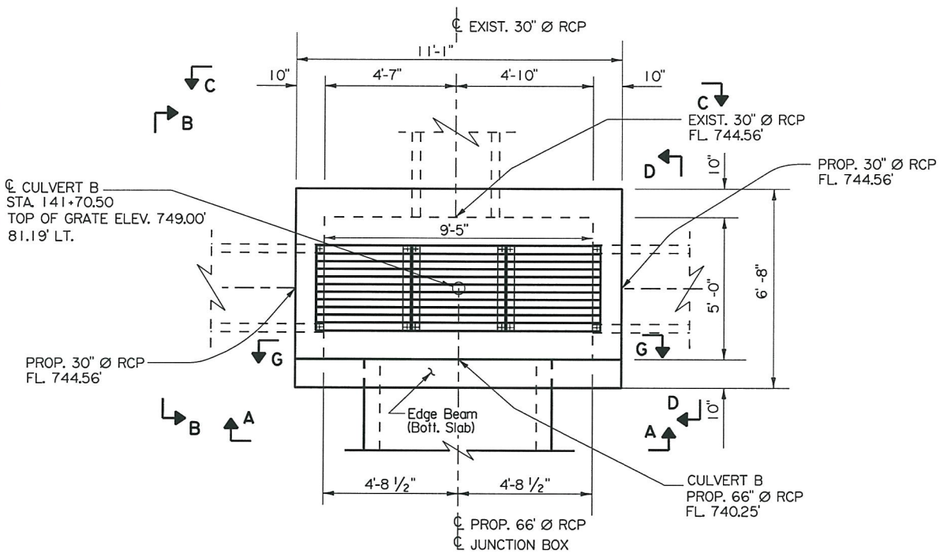

PLAN
Scale 3/16" = 1' - 0"

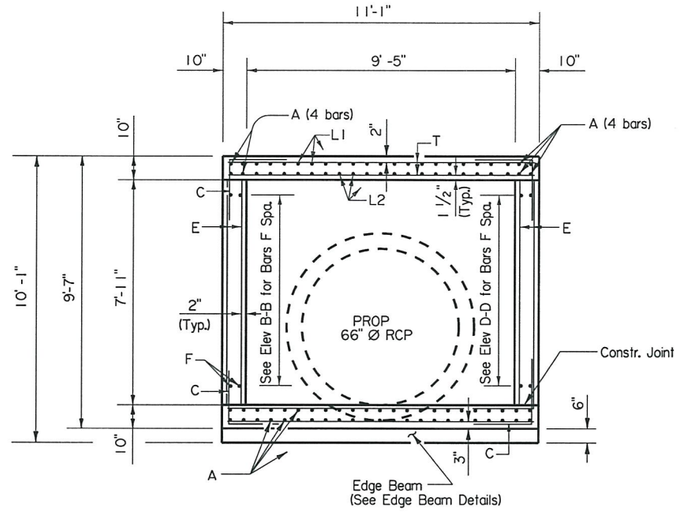

SECTION G-G
Scale 3/16" = 1' - 0"

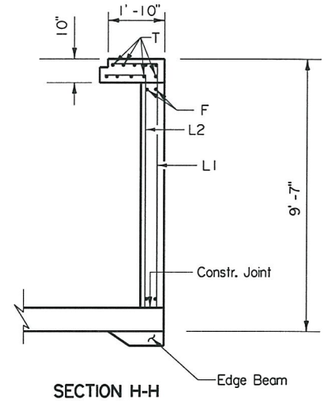

SECTION H-H

(Bottom Slab Reinforcement not shown)

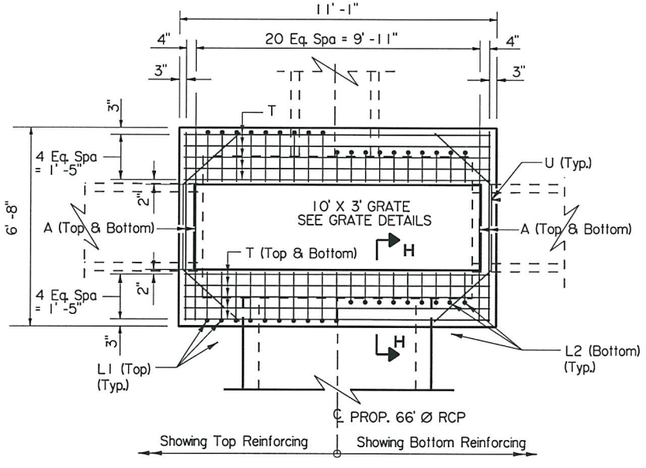

PLAN-TOP SLAB
Scale 3/16" = 1' - 0"

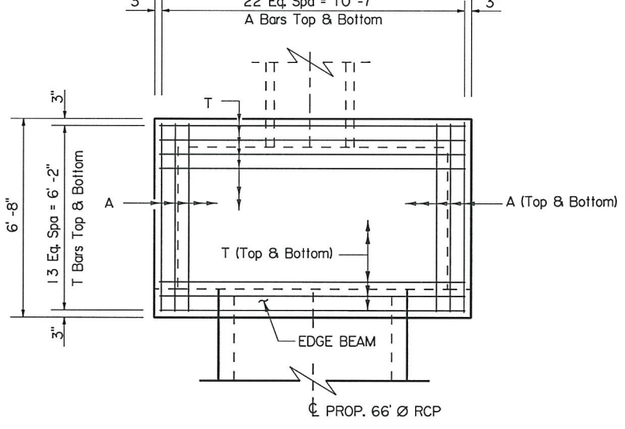

PLAN-BOTTOM SLAB
Scale 3/16" = 1' - 0"

Notes:
For General Notes and other details see Sheet 1, 3 & 4 of 4 Sheets.

STATE OF TEXAS
K. A. MENSAH
67081
LICENSED PROFESSIONAL ENGINEER

8/17/11

Sheet 2 of 4 Sheets

Texas Department of Transportation
© 2011

SH 289

JUNCTION BOX - B
DETAILS

DESIGN	FED. RD. DIV. NO.	FEDERAL AID PROJECT NO.		HIGHWAY NO.
KAM	6	(See Title Sheet)		SH 289
DESIGN CK	STATE	DISTRICT	COUNTY	SHEET NO.
MPB	TEXAS	DALLAS	COLLIN	
GRAPHICS	CONTROL	SECTION	JOB	301
MPB	0091	03	P-201107-01	
GRPH CHECK				
KAM				

User: mbansko
FILE: T:\DALBRDG\Inlet& Culvert\sh289-boxB\Junction Box B Layout.dgn
TIME: 1:38:09 PM
DATE: 8/17/2011

...S DISPLAYED

1	2	3	4	5	6	7	8
9	10	11	12	13	14	15	16
17	18	19	20	21	22	23	24
25	26	27	28	29	30	31	32
33	34	35	36	37	38	39	40
41	42	43	44	45	46	47	48
49	50	51	52	53	54	55	56
57	58	59	60	61	62	63	

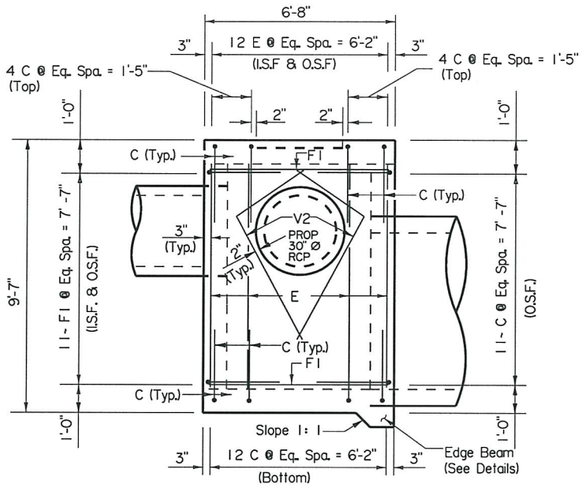

ELEVATION B-B
Scale 1/4" = 1' - 0"

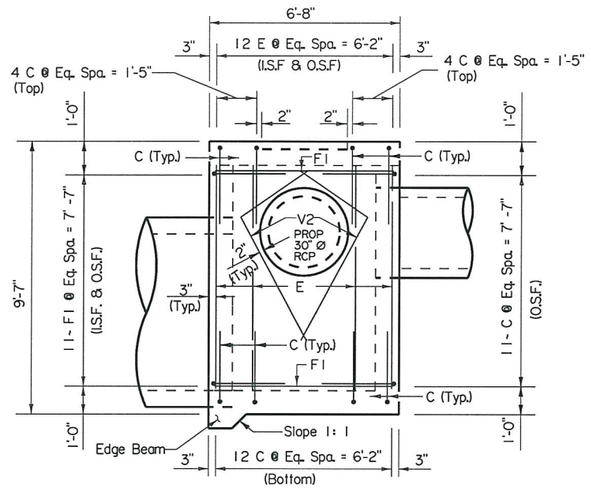

ELEVATION D-D
Scale 1/4" = 1' - 0"

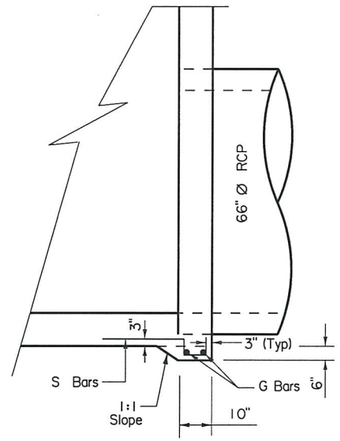

EDGE BEAM DETAILS
NTS

BAR SCHEDULE

Bar	Type	No.	Size	Length	Weight
A	St.	54	#6	6'- 4"	514
T	St.	48	#6	10'- 9"	775
L1	Bt.	36	#5	10'- 0"	375
L2	Bt.	36	#5	9'- 3"	347
C	Bt.	115	#5	5'- 0"	600
E	St.	48	#5	7'- 11"	396
F1	St.	44	#4	6'- 4"	186
F2	St.	28	#4	9'- 5"	176
G	St.	2	#5	10'- 9"	22
S	Bt.	11	#4	2'- 11"	21
U	Bt.	4	#5	8'- 4"	35
V1	Bt.	4	#4	10'- 5"	28
V2	Bt.	12	#4	7'- 10"	63
#	Reinf. Steel			LB	3,538
#	Class S Conc.			CY	9.2

- For Contractor's information only.

General Note:
Junction Box designed for HL-93 Loading.
For other details and see sheet 1 & 2 of 4 sheets.
See sheet 4 of 4 sheets for Grate Details.
I. S. F. = Inside Face.
O. S. F. = Outside Face.
All Reinf. Steel shall be Grade 60.
Class S Conc. shall be used.
Bars L1, L2, E, F1, F2, & C must be cut or bent as required to clear RCP.

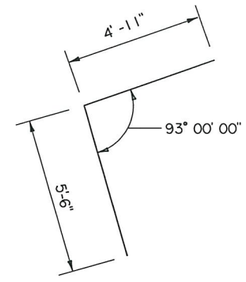

BARS V1

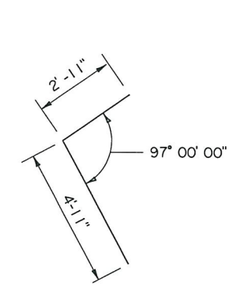

BARS V2

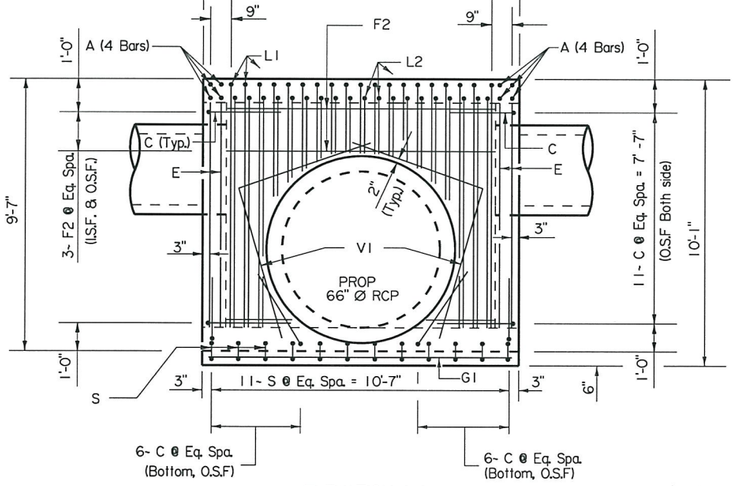

ELEVATION A-A
Scale 1/4" = 1' - 0"

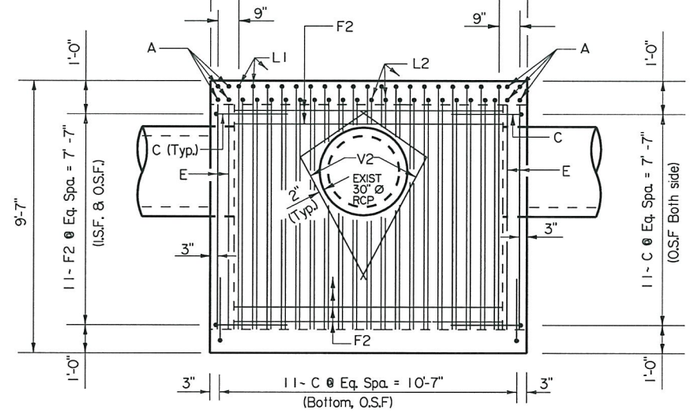

ELEVATION C-C
Scale 1/4" = 1' - 0"

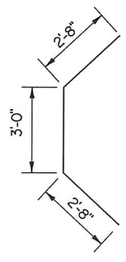

BAR U

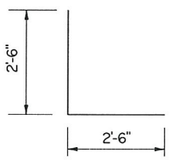

BAR C

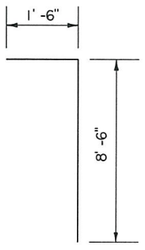

BAR L1

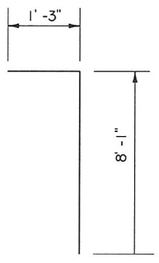

BAR L2

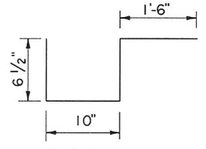

BAR S

8/17/11

Sheet 3 of 4 Sheets

Texas Department of Transportation
© 2011

SH 289

JUNCTION BOX - B
DETAILS

DESIGN	FED.RD. DIV.NO.	FEDERAL AID PROJECT NO.		HIGHWAY NO.
KAM	6	(See Title Sheet)		SH 289
DESIGN CK	STATE	DISTRICT	COUNTY	SHEET NO.
MPB	TEXAS	DALLAS	COLLIN	302
GRAPHICS	CONTROL	SECTION	JOB	
MPB	0091	03	P-201107-01	
GRPH CHECK				
KAM				

DATE: 8/17/2011 TIME: 1:38:26 PM FILE: T:\DALBRDG\Inlet& Culvert\sh289-boxB\Junction Box B Layout.dgn User: mbansko

...S DISPLAYED
1 2 3 4 5 6 7 8
9 10 11 12 13 14 15 16
17 18 19 20 21 22 23 24
25 26 27 28 29 30 31 32
33 34 35 36 37 38 39 40
41 42 43 44 45 46 47 48
49 50 51 52 53 54 55 56
57 58 59 60 61 62 63

User: mbansko
FILE: T:\DALBRDG\Inlet& Culvert\sh289-boxB\Junction Box B Layout.dgn
TIME: 1:38:17 PM
DATE: 8/17/2011

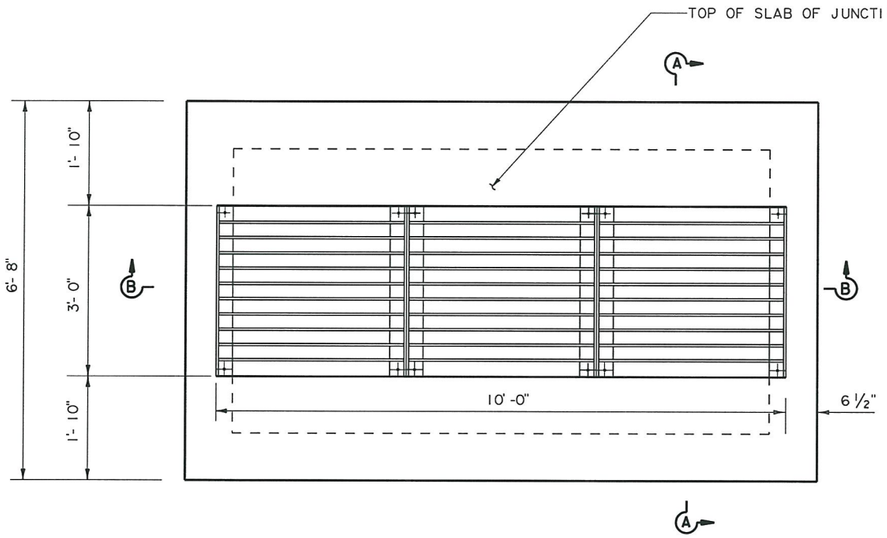

PLAN

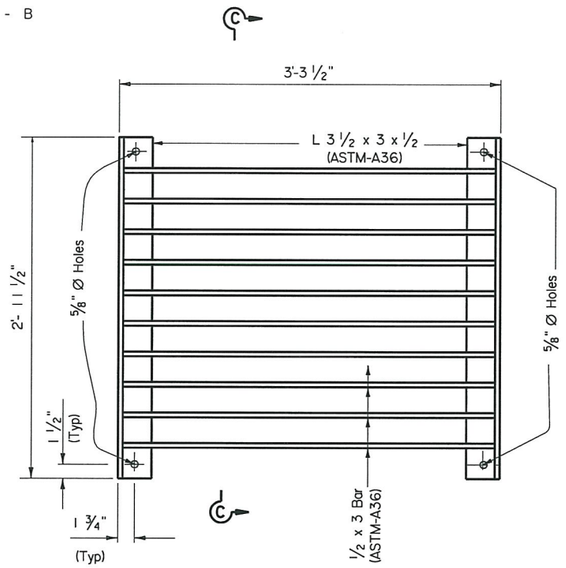

TYPICAL GRATE PLAN

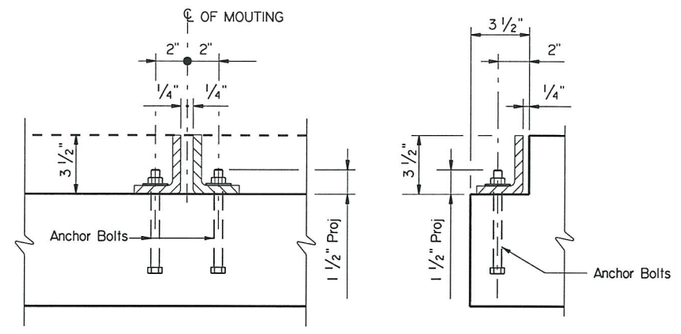

DETAIL A **DETAIL B**

GRATE MOUNTING DETAIL

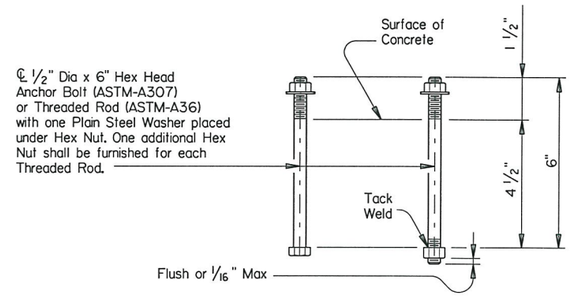

ANCHOR BOLT OPTIONS

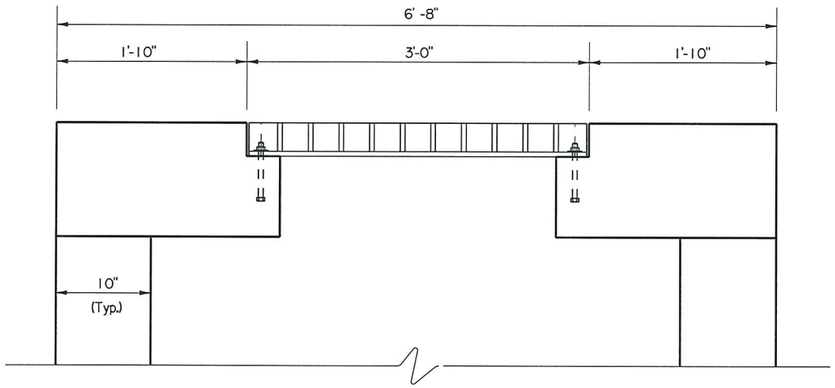

SECTION A-A

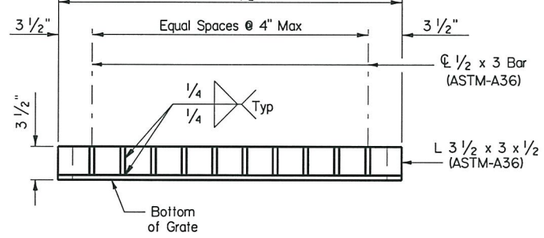

SECTION C-C

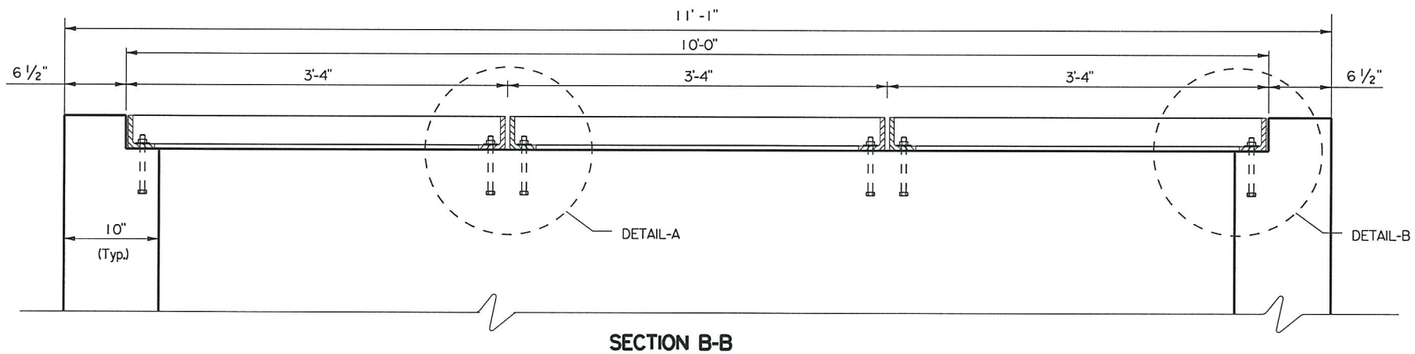

SECTION B-B

NOTES:

Anchor Bolts are 1/2" Dia ASTM A307 Grade A bolts (or A36 threaded rods with one tack welded hex head nut each) with one hex head nut and one plain steel washer.

Structural Steel for grates shall conform to the requirements of ASTM Designation A-36 or AISI Designation M1010-M1020.

All steel components except reinforcing, shall be galvanized after fabrication. Galvanizing damaged during transport or construction shall be repaired in accordance with the specifications.

Sheet 4 of 4 Sheets

Texas Department of Transportation
© 2011

SH 289

JUNCTION BOX - B

GRATE DETAILS

DESIGN	FED.RD. DIV.NO.	FEDERAL AID PROJECT NO.		HIGHWAY NO.
MPB	6	(See Title Sheet)		SH 289
DESIGN CK	STATE	DISTRICT	COUNTY	SHEET NO.
KAM	TEXAS	DALLAS	COLLIN	
GRAPHICS	CONTROL	SECTION	JOB	303
MPB	0091	03	P-201107-01	
GRPH CHECK				
KAM				

TXDOT
2.0000 FT / IN.

Culvert Station and/or Creek name followed by applicable end (Lt, Rt or Both)	Description of Box Culvert No. Spans ~ Span X Height	Max Fill Height (Ft)	Applicable Box Culvert Standard (4)	Applicable Wingwall or End Treatment Standard	Skew Angle (0°, 15°, 30° or 45°)	Side Slope or Channel Slope Ratio (SL:1)	T Culvert Top Slab Thickness (In)	U Culvert Wall Thickness (In)	C Estimated Curb Height (Ft)	Hw (1) Height of Wingwall (Ft)	A Curb to End of Wingwall (Ft)	B Offset of End of Wingwall (Ft)	Lw Length of Longest Wingwall (Ft)	Ltw Culvert Toewall Length (Ft)	Atw Anchor Toewall Length (Ft)	Riprap Apron (C.Y.)	Class "C" (2) Conc (Curb) (C.Y.)	Class "C" (3) Conc (Wingwall) (C.Y.)	Total Wingwall Area (S.F.)
STA. 122+87.20, Culv A (Both)	4 ~ 8'x 4'	10'	SCP-8	PW	15°	3:1	8"	8"	0.833'	5.500'	N/A	N/A	17.082'	40.203'	N/A	0.0	2.4	28.8	376
STA. 151+51.94, Culv C (Rt)	2 ~ 5'x 5'	5'	SCP-5	PW	0°	3:1	6"	6"	3.500'	9.000'	N/A	N/A	27.000'	12.500'	N/A	0.0	1.6	32.0	486
STA. 151+51.94, Culv C (Lt)	2 ~ 5'x 5'	5'	SCP-5	PW	0°	3:1	6"	6"	1.500'	7.000'	N/A	N/A	21.000'	12.500'	N/A	0.0	0.7	19.3	294
STA. 174+95.00, Culv D (Both)	2 ~ 7'x 7'	5'	SCP-7	PW	30°	3:1	8"	8"	0.833'	8.500'	N/A	N/A	29.445'	19.822'	N/A	0.0	1.2	62.6	1002
STA. 185+17.00, Culv E (Rt)	2 ~ 6'x 6'	5'	SCP-6	PW	0°	3:1	7"	7"	1.917'	8.500'	N/A	N/A	25.500'	14.833'	N/A	0.0	1.1	26.9	434
STA. 185+17.00, Culv E (Lt)	2 ~ 6'x 6'	5'	SCP-6	PW	0°	3:1	7"	7"	1.417'	8.000'	N/A	N/A	24.000'	14.833'	N/A	0.0	0.8	24.5	384
STA. 206+65.00, Culv F (Lt)	1 ~ 4'x 2'	5'	SCP-4	PW	0°	2:1	5"	5"	0.917'	3.333'	N/A	N/A	6.667'	4.833'	N/A	0.0	0.2	3.5	44
STA. 206+65.00, Culv F (Rt)	1 ~ 4'x 2'	5'	SCP-4	PW	0°	3:1	5"	5"	3.583'	6.000'	N/A	N/A	18.000'	4.833'	N/A	0.0	0.6	13.5	216
STA. 222+85.00, Culv G (Both)	3 ~10'x 7'	5'	SCP-10	PW	0°	2:1	10"	10"	0.167'	8.000'	N/A	N/A	16.000'	36.000'	N/A	0.0	0.4	37.6	512
STA. 243+52.00, Culv H (Rt)	1 ~ 5'x 4'	10'	SCP-5	PW	30°	3:1	6"	6"	1.500'	6.000'	N/A	N/A	20.785'	6.928'	N/A	0.0	0.4	15.7	249
STA. 243+52.00, Culv H (Lt)	1 ~ 5'x 4'	10'	SCP-5	PW	30°	3:1	6"	6"	4.000'	8.500'	N/A	N/A	29.445'	6.928'	N/A	0.0	1.0	30.1	501
STA. 245+77.00, Culv I (Rt)	1 ~ 6'x 5'	10'	SCP-6	PW	45°	2:1	7"	7"	1.417'	7.000'	N/A	N/A	19.799'	10.135'	N/A	0.0	0.5	18.0	277
STA. 245+77.00, Culv I (Lt)	1 ~ 6'x 5'	10'	SCP-6	PW	45°	2:1	7"	7"	2.417'	8.000'	N/A	N/A	30.000'	10.135'	N/A	0.0	0.9	22.7	362

DISCLAIMER:
The use of this standard is governed by the "Texas Engineering Practice Act". No warranty of any kind is made by TxDOT for any purpose whatsoever. TxDOT assumes no responsibility for the conversion of this standard to other formats or for incorrect results or damages resulting from its use.

7/11/2011
t:\dalgn*s\s ...design\sheets\drng\289BCS01.dgn
LEVELS DISABLED
COMMENTS:
1

NOTES:
Skew Angle = 0° for SW-0, FW-0, SETB-CD, SETB-SW-0, and SETB-FW-0 standards.
30° Maximum for Safety End Treatment

SL:1 = Horizontal:1 Vertical
Side Slope at culvert for Flared or Straight Wingwalls. Channel Slope for Parallel Wingwalls.
Slope shall be 3:1 or flatter for Safety End Treatments.

T = Box Culvert Top Slab Thickness. Dimension can be found on the applicable Box Culvert Standard.

U = Box Culvert Wall Thickness. Dimension can be found on the applicable Box Culvert Standard.

C = Curb Height.

See applicable wing or end treatment standards for calculations of Hw, A, B, Lw, Ltw, Atw, and Total Wingwall Area.
Hw = Height of Wingwall.
A = Distance from Face of Curb to End of Wingwall (Not applicable to Parallel or Straight Wingwalls).
B = Offset of End of Wingwall (Not applicable to Parallel or Straight Wingwalls).
Lw = Length of Longest Wingwall.
Ltw = Length of Culvert Toewall (Not applicable when using Riprap Apron).
Atw = Length of Anchor Toewall (Applicable to Safety End Treatment only).
Total Wingwall Area = Wingwall area in S.F. for two wingwalls (one structure end) if Lt or Rt.
Area for four wingwalls (two structure ends) if Both.

(1) The wall heights shown will be rounded to the nearest Foot for bidding purposes.

(2) Concrete volume shown is for box culvert curb only. For curbs using the RAC standard, quantities shown must be increased by a factor of 2. If Class "S" concrete is required for the top slab of the culvert, the curb concrete shall also be Class "S". Curb concrete is considered part of the Box Culvert for payment.

(3) Concrete volume shown is total of wing, footing, culvert toewall (if any), anchor toewall (if any) and wingwall toewall. Riprap apron, culvert and curb quantities are not included.

(4) Regardless of the type of culvert shown on this sheet, the Contractor shall have the option of furnishing cast-in-place or precast culverts unless otherwise shown elsewhere on the plans. If the Contractor elects to provide culverts of a different type than those shown on this sheet, it shall be the Contractor's responsibility to make the necessary adjustments to the dimensions and quantities shown.

SPECIAL NOTE:

This sheet is a supplement to the Box Culvert standards. It is to be filled out by the culvert specifier and provides dimensions for the construction of the Box Culvert Wingwalls and Safety End Treatments.

An Excel 97 spreadsheet to assist in completing this table can be downloaded from the Bridge Standards (English) web page on the TxDOT web site. The completed sheet shall be signed, sealed, and dated by a licensed Professional Engineer.

STATE OF TEXAS
HASSAN SAM MOGHADASSI
84231
LICENSED
PROFESSIONAL ENGINEER

H. Moghadassi, P.E. 07/12/11
Signature of Registrant & Date

289BCS01.dgn

Texas Department of Transportation
Bridge Division

BOX CULVERT SUPPLEMENT
WINGS AND END TREATMENTS

BCS

FILE: bcsstdel.dgn	DN: TxDOT	CK: TxDOT	DW: TxDOT	CK: GAF	
©TxDOT February 2010	DISTRICT	STATE PROJECT NO.			SHEET
REVISIONS	DALLAS	SEE THE TITLE SHEET			305
	COUNTY		CONTROL	SECT	JOB	HIGHWAY
	COLLIN		0918	33	021	SH289

P-20110702

...\sheets\drng\289BCS01.dgn

DISCLAIMER:
The use of this standard is governed by the "Texas Engineering Practice Act". No warranty of any kind is made by TxDOT for any purpose whatsoever. TxDOT assumes no responsibility for the conversion of this standard to other formats or for incorrect results or damages resulting from its use.

LEVELS DISPLAYED

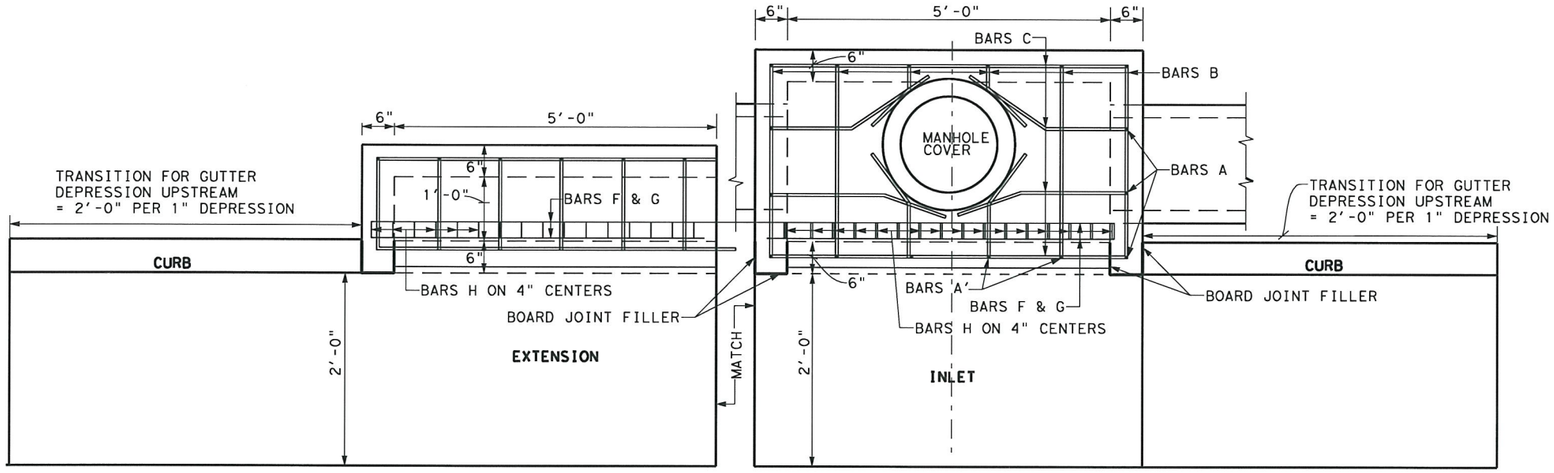

PLAN VIEW

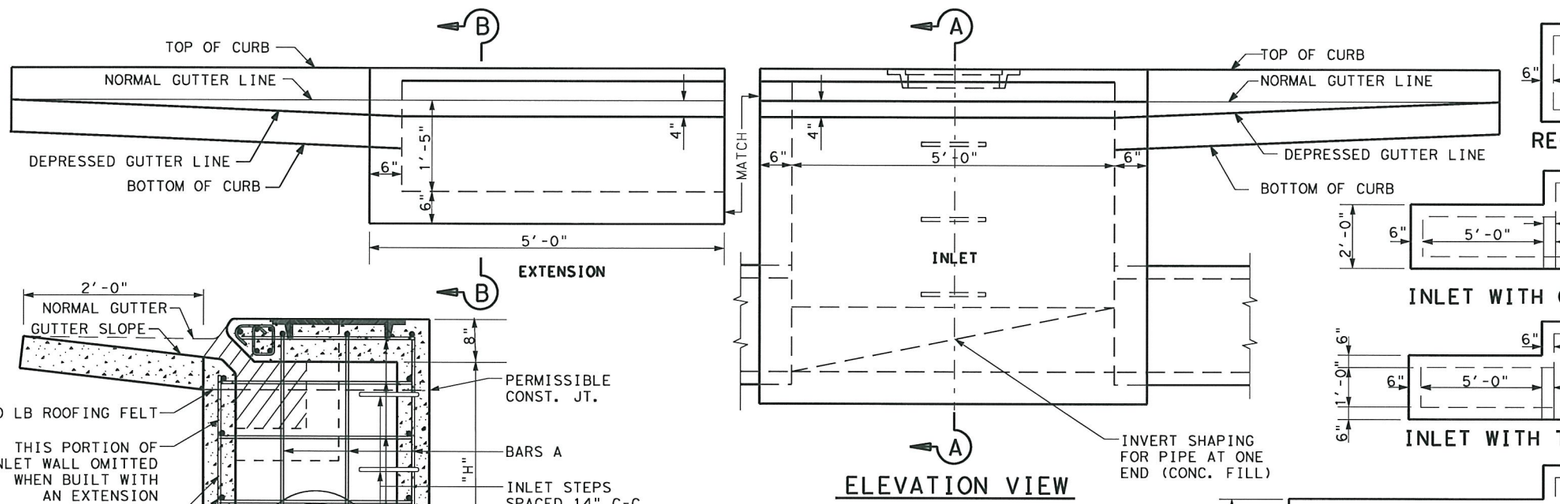

ELEVATION VIEW

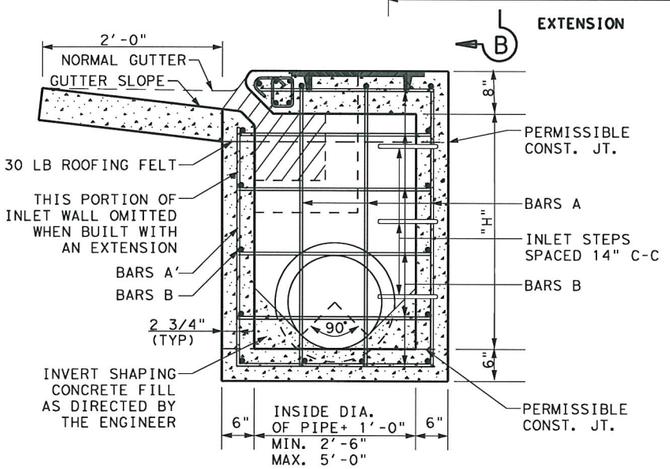

SECTION A-A

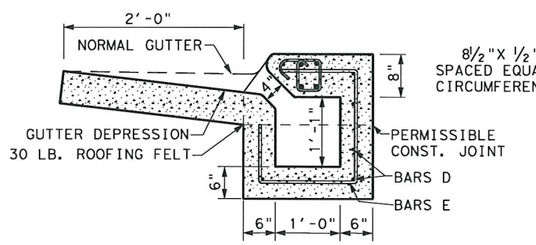

SECTION B-B

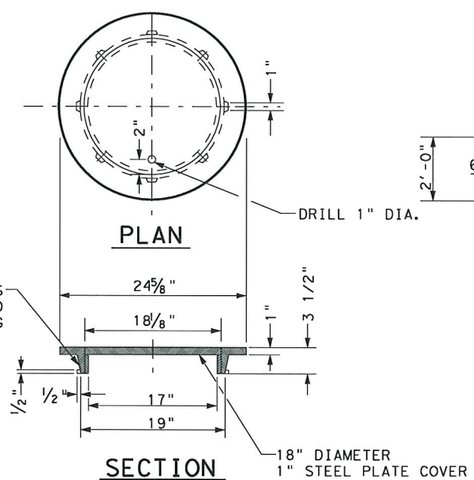

PLAN

SECTION

18" C.I. MANHOLE RING & STEEL PLATE COVER TY. A

NOTE: DIMENSIONS FOR CURB SECTIONS VARY ACCORDING TO LIMITS OF PROPOSED CURB TYPES.

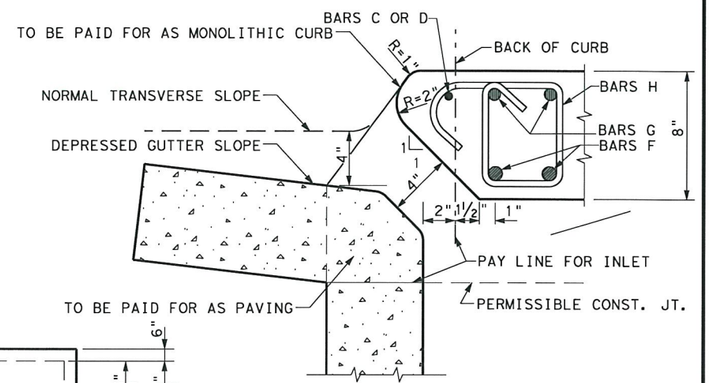

THROAT DETAIL

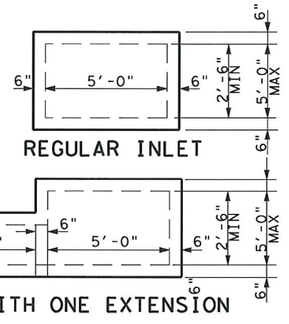

PLAN OF INLET AND EXTENSIONS

GENERAL NOTES:

1. ALL CONCRETE SHALL BE CLASS A. ALL EXPOSED CORNERS SHALL BE CHAMFERED 3/4".
2. CAST IRON STEPS, SPACED 14" AND LOCATED AS DIRECTED BY THE ENGINEER, SHALL BE PROVIDED AND INSTALLED IN ALL INLETS WHERE THE DEPTH "H" EXCEEDS 4'-0".
3. PAYMENT OF CURB INLETS AND EXTENSIONS THERETO AS SHOWN ON PLANS WILL BE MADE AT THE UNIT PRICE BID FOR "INLET (COMPLETE) (TYPE I)", "INLET EXTENSION".
4. DIMENSIONS RELATING TO REINFORCING STEEL ARE TO CENTERS OF BARS.
5. SEE SHEET NO. 2 OF 2 FOR INLET SUMMARY OF CONCRETE AND REINFORCING STEEL.

STATE OF TEXAS
HASSAN SAM MOGHADASSI
84231
LICENSED
PROFESSIONAL ENGINEER

H. Moghadassi P.E. 07/12/11
Signature of Registrant & Date

NOT TO SCALE

SHEET 1 OF 2

Texas Department of Transportation
Dallas District

CURB INLET TYPE I (MOD)

CI(TY I)-08 (MOD)

FILE: CI(TY I)-08	DN: TxDOT	CK: TxDOT	DW:	CK:
© TxDOT	DISTRICT	STATE PROJECT NO.		SHEET
	DAL	(SEE TITLE SHEET)		306
	COUNTY	CONTROL	SECT	JOB	HIGHWAY
	COLLIN	0918	47	01	SH 289

P-20110701

REINFORCING STEEL AND CONCRETE IN TYPE I - 5FT. INLETS

INLET SIZE		STEEL																										TOTALS	
		BARS A				BARS A'				BARS B				BARS C				BARS F				BARS G				BARS H				Reinf. Steel	CL A Conc
H	W	NO.	SIZE	LENGTH	WEIGHT	NO.	SIZE	LENGTH	WEIGHT	NO.	SIZE	LENGTH	WEIGHT	NO.	SIZE	LENGTH	WEIGHT	NO.	SIZE	LENGTH	WEIGHT	NO.	SIZE	LENGTH	WEIGHT	NO.	SIZE	LENGTH	WEIGHT	LBS	*C.Y.
3.0	2.5	12	4	3'-10"	31	4	4	2'-6"	7	18	4	3'-2"	38	13	4	5'-8"	49	2	7	5'-8"	23	2	6	9'-8"	29	18	3	2'-7"	17	194	1.64
3.5	2.5	12	4	4'-4"	35	4	4	3'-0"	8	18	4	3'-2"	38	13	4	5'-8"	49	2	7	5'-8"	23	2	6	9'-8"	29	18	3	2'-7"	17	199	1.80
4.0	2.5	12	4	4'-10"	39	4	4	3'-6"	9	20	4	3'-2"	42	15	4	5'-8"	57	2	7	5'-8"	23	2	6	9'-8"	29	18	3	2'-7"	17	216	1.96
4.5	2.5	12	4	5'-4"	43	4	4	4'-0"	11	20	4	3'-2"	42	15	4	5'-8"	57	2	7	5'-8"	23	2	6	9'-8"	29	18	3	2'-7"	17	222	2.11
5.0	2.5	12	4	5'-10"	47	4	4	4'-6"	12	22	4	3'-2"	47	17	4	5'-8"	64	2	7	5'-8"	23	2	6	9'-8"	29	18	3	2'-7"	17	239	2.27
5.5	2.5	12	4	6'-4"	51	4	4	5'-0"	13	22	4	3'-2"	47	17	4	5'-8"	64	2	7	5'-8"	23	2	6	9'-8"	29	18	3	2'-7"	17	244	2.42
6.0	2.5	12	4	6'-10"	55	4	4	5'-6"	15	24	4	3'-2"	51	19	4	5'-8"	72	2	7	5'-8"	23	2	6	9'-8"	29	18	3	2'-7"	17	262	2.59
6.5	2.5	12	4	7'-4"	59	4	4	6'-0"	16	24	4	3'-2"	51	19	4	5'-8"	72	2	7	5'-8"	23	2	6	9'-8"	29	18	3	2'-7"	17	267	2.74
8.0	2.5	12	4	8'-10"	71	4	4	7'-6"	20	28	4	3'-2"	59	23	4	5'-8"	87	2	7	5'-8"	23	2	6	9'-8"	29	18	3	2'-7"	17	306	3.22
8.5	2.5	12	4	9'-4"	75	4	4	8'-0"	21	28	4	3'-2"	59	23	4	5'-8"	87	2	7	5'-8"	23	2	6	9'-8"	29	18	3	2'-7"	17	311	3.37
10.0	2.5	12	4	10'-10"	87	4	4	9'-6"	25	32	4	3'-2"	68	27	4	5'-8"	102	2	7	5'-8"	23	2	6	9'-8"	29	18	3	2'-7"	17	351	3.84
10.5	2.5	12	4	11'-4"	91	4	4	10'-0"	27	32	4	3'-2"	68	27	4	5'-8"	102	2	7	5'-8"	23	2	6	9'-8"	29	18	3	2'-7"	17	357	4.00
4.0	3.0	12	4	4'-10"	39	4	4	3'-6"	9	20	4	3'-8"	49	15	4	5'-8"	57	2	7	5'-8"	23	2	6	9'-8"	29	18	3	2'-7"	17	223	2.16
4.5	3.5	14	4	5'-4"	50	4	4	4'-0"	11	20	4	4'-2"	56	17	4	5'-8"	64	2	7	5'-8"	23	2	6	9'-8"	29	18	3	2'-7"	17	250	2.54
5.5	3.5	14	4	6'-4"	59	4	4	5'-0"	13	22	4	4'-2"	61	19	4	5'-8"	72	2	7	5'-8"	23	2	6	9'-8"	29	18	3	2'-7"	17	274	2.89
7.5	4.0	16	4	8'-4"	89	4	4	7'-0"	19	26	4	4'-8"	81	25	4	5'-8"	95	2	7	5'-8"	23	2	6	9'-8"	29	18	3	2'-7"	17	353	3.87
10.0	5.0	18	4	10'-10"	130	4	4	9'-6"	25	32	4	5'-8"	121	33	4	5'-8"	125	2	7	5'-8"	23	2	6	9'-8"	29	18	3	2'-7"	17	470	5.42
7.5	5.0	18	4	8'-4"	100	4	4	7'-0"	19	26	4	5'-8"	96	29	4	5'-8"	110	2	7	5'-8"	23	2	6	9'-8"	29	18	3	2'-7"	17	394	4.09

*Does not include invert shaping

NOTE: On inlets with extensions, Bars F & G shall run continuous thru the inlet and extensions.

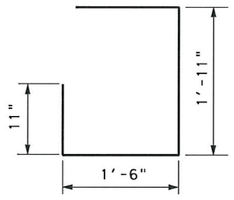

BARS E

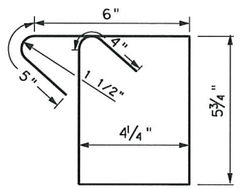

BARS H

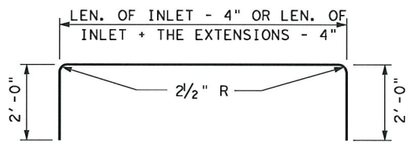

BARS G

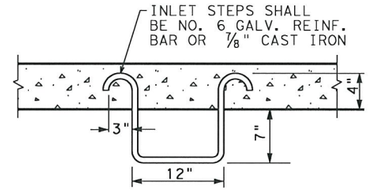

DETAIL OF INLET STEPS

CONCRETE TO BE DEDUCTED FOR PIPES	
Pipe Size	Conc. C.Y.
15"	0.04
18"	0.05
21"	0.07
24"	0.09
27"	0.11
30"	0.14
33"	0.17
36"	0.19
42"	0.26
48"	0.34
54"	0.43

NOTE:
WHERE TWO OR MORE EXTENSIONS ARE TOGETHER, BARS "D" SHALL RUN CONTINUOUS THRU THE EXTENSIONS.
* DOES NOT INCLUDE QUANTITY FOR INVERT SHAPING.

REINFORCING STEEL AND CONCRETE IN EXTENSIONS

5'-0" EXTN. NO.	BARS D				BARS E				BARS F				BARS G				BARS H				Reinf. Steel	CL A Conc
	NO.	SIZE	LENGTH	WEIGHT	NO.	SIZE	LENGTH	WEIGHT	NO.	SIZE	*LENGT	WEIGHT	NO.	SIZE	*LENGT	WEIGHT	NO.	SIZE	LENGTH	WEIGHT	LBS	C.Y.
1	8	4	5'-8"	30	6	4	5'-4"	21	2	7	5'-6"	23	2	6	5'-6"	17	16	3	2'-7"	6	97	1.64
2	8	4	11'-2"	60	12	4	5'-4"	43	2	7	11'-0"	45	2	6	11'-0"	33	33	3	2'-7"	32	213	1.80
3	Reinf. Steel is as shown for 1 Extension and as shown for 2 Extensions																					

** Length is to be added to the length as shown in the above table for Typ. I - 5'-0" Inlets*

GENERAL NOTES:

REINFORCING STEEL AND CONCRETE TABLES SHOWN
ABOVE ARE FOR INFORMATION ONLY
THESE TABLES ARE TO BE USED WITH INLET TYPE I, WITH 3" & 5"
NORMAL CURB HEIGHT AND 8" CONCRETE PAVEMENT.

STATE OF TEXAS
HASSAN SAM MOGHADASSI
84231
LICENSED
PROFESSIONAL ENGINEER

H. Moghadassi, P.E. 07.12.11
Signature of Registrant & Date

REVISED ON 9/10/08
NOT TO SCALE

SHEET 2 OF 2

Texas Department of Transportation
Dallas District

CURB INLET TYPE I (MOD)

CI(TY I)-08 (MOD)

FILE: CI(TY I)-08	DN: TxDOT	CK: TxDOT	DW:	CK:
© TxDOT	DISTRICT	STATE PROJECT NO.		SHEET
	DAL	(SEE TITLE SHEET)		307
	COUNTY	CONTROL	SECT	JOB	HIGHWAY
	COLLIN	0918	27	054	SH 289

P-2011-07-054

DISCLAIMER:
The use of this standard is governed by the "Texas Engineering Practice Act". No warranty of any kind is made by TxDOT for any purpose whatsoever. TxDOT assumes no responsibility for the conversion of this standard to other formats or for incorrect results or damages resulting from its use.

LEVELS DISPLAYED
1

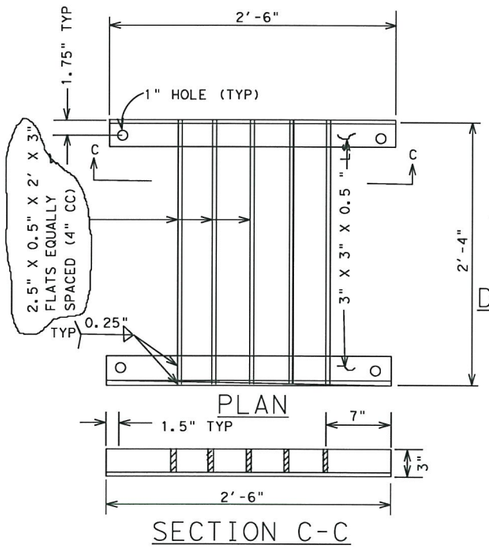

GRATE DETAILS TYPE C

SC: 1.5" = 1'-0"

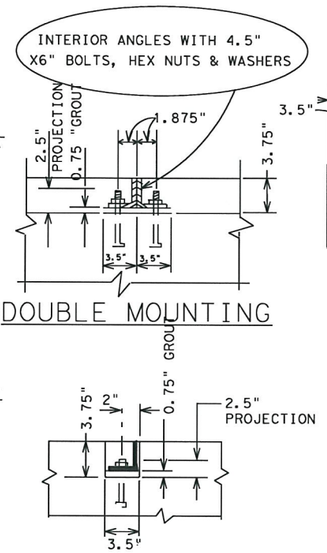

GRATE MOUNTING DETAILS

SCALE: 1.5" = 1-0"

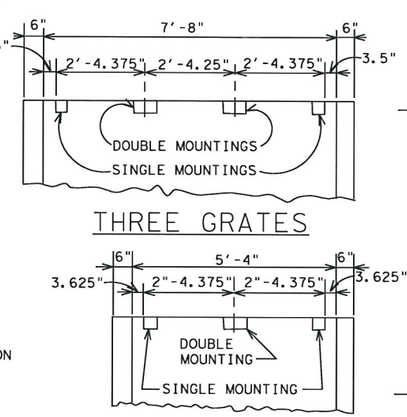

MULTIPLE GRATE INLET DETAILS

SCALE: ½" = 1'-0"

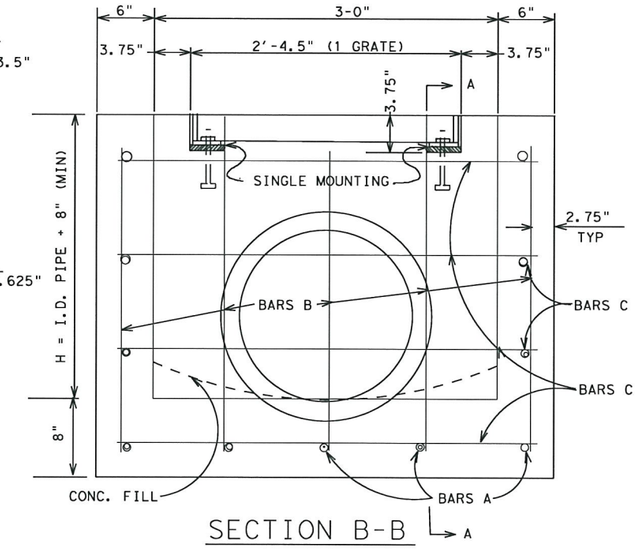

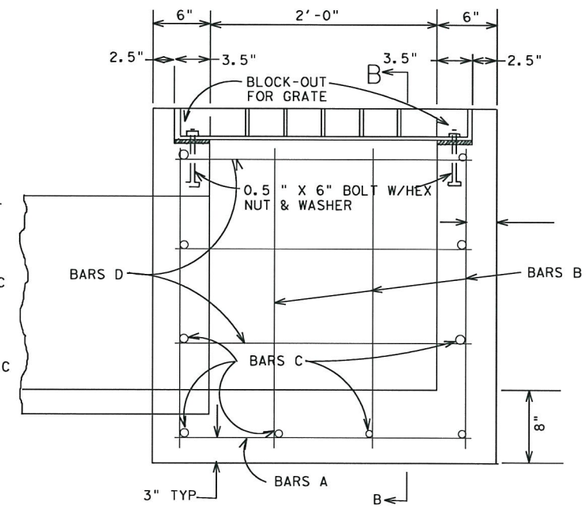

INLET DETAILS TYPE "C"

SCALE : 1.5" = 1'-0"

PIPE SIZE	CONC. C.Y.
15"	0.04
18"	0.05
21"	0.07
24"	0.09
27"	0.11
30"	0.14
33"	0.17
36"	0.20
39"	0.23
42"	0.26
48"	0.34

CONCRETE TO BE DEDUCTED FOR PIPES

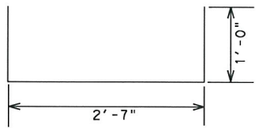

BAR "A"

TWO GRATES

BILL OF REINFORCING STEEL FOR TYPE "C" INLETS

	H	BARS A 12" C.C. NO.	LENGTH	SIZE	WT.	BARS B 12" C.C. NO.	LENGTH	SIZE	WT.	BARS C 12" C.C. NO.	LENGTH	SIZE	WT.	BARS D 12" C.C. NO.	LENGTH	SIZE	WT.	REINF. STEEL LB.	CL "A" CONC. C.Y.	GRATE
1 GRATE	2'-6"	5	4'-7"	4	15	14	2'-8"	4	25	10	3'-8"	4	24	6	2"-8"	4	11	75	0.85	95#
	3'-0"	5	↑	↑	15	14	3'-2"	↑	30	10	3'-8"	↑	24	6	↑	↑	11	80	0.96	
	3'-6"	5			15	14	3'-8"		34	12	3'-8"		29	8			14	92	1.07	
	4'-0"	5			15	14	4'-2"		39	12	3'-8"		29	8			14	97	1.18	
	4'-6"	5			15	14	4'-8"		44	14	3'-8"		34	10			18	111	1.29	
	5'-0"	5			15	14	5'-2"		48	14	3'-8"		34	10			18	115	1.40	
2-GRATE	3'-0"	7			21	18	3"-2"		38	10	6'-0"		40	6			11	110	1.38	190#
	3'-6"	7			21	18	3'-8"		44	12	6'-0"		48	8			14	127	1.53	
	4'-0"	7			21	18	4'-2"		50	12	6'-0"		48	8			14	133	1.68	
	4'-6"	7			21	18	4'-8"		56	14	6'-0"		56	10			18	151	1.83	
	5'-0"	7			21	18	5'-2"		62	14	6'-0"		56	10			18	157	1.98	
	5'-6"	7			21	18	5'-8"		68	16	6'-0"		64	12			21	174	2.13	
3-GRATE	4'-0"	10			31	24	4'-2"		67	12	8'-4"		67	8			14	178	2.22	285#
	4'-6"	10			31	24	4'-8"		75	14	8'-4"		78	10			18	202	2.41	
	5'-0"	10			31	24	5'-2"		83	14	8'-4"		78	10			18	210	2.60	
	5'-6"	10			31	24	5'-8"		91	16	8'-4"		89	12			21	232	2.79	
	6'-0"	10	↓	↓	31	24	6'-2"	↓	99	16	8'-4"	↓	89	12	↓	↓	21	240	2.98	
	6'-6"	10	4'-7"	4	31	24	6'-8"	4	107	16	8'-4"	4	100	14	2"-8"	4	25	263	3.17	

* DOES NOT INCLUDE QUANTITY FOR SHAPING OR DEDUCTION FOR PIPES

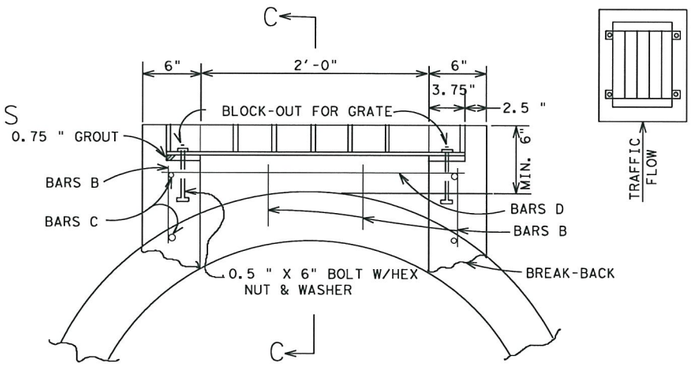

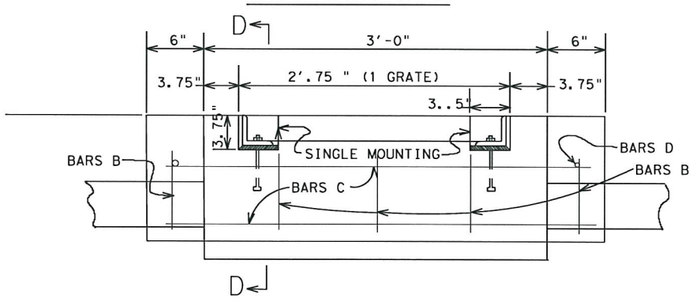

INLET DETAILS TYPE "G"

FOR USE WITH PIPES GREATER THAN 30" DIAMETER

GENERAL NOTES

1. EXPOSED EDGES SHALL BE CHAMFERED 0.75".
2. ALL CONCRETE SHALL BE CLASS "A".
3. ALL DIMENSIONS TO BE REINFORCING STEEL ARE TO CENTERS OF BARS.
4. IN AREAS OF CONFLICT BETWEEN REINFORCING STEEL, BLOCKOUTS, PIPES, ANCHOR BOLTS OR OTHER REINFORCING STEEL, THE REINFORCEMENT SHALL BE BENT OR ADJUSTED TO CLEAR AS DIRECTED BY THE ENGINEER.
5. IF POSSIBLE HORIZONTAL GRATE INLET SHOULD BE ORIENTED SUCH THAT BOTH TRAFFIC AND DITCH WATER APPROACH PARRALLEL TO BARS ON GRATE. IF THIS IS NOT POSSIBLE ORIENTATION SHOULD FAVOR TRAFFIC FLOW WHERE PIPE SIZES PERMIT.
6. STRUCTURAL STEEL FOR GRATES SHALL CONFORM TO THE REQUIREMENTS OF ASTM DESIGNATION A-36 OR AISI DESIGNATION m1010-m1020. PAYMENT FOR GRATES SHALL BE MADE UNDER THE BID ITEM "GRATE (TY C)."
   QUANTITIES FOR CONCRETE & STEEL ARE FOR CONTRACTOR'S INFORMATION ONLY.
7. PAYMENT FOR INLETS SHALL BE MADE UNDER THE BID ITEM "INLETS (COMP) (TY C-1 GRATE), (TY C-2 GRATE), (TY C=3 GRATE) OR (TY G-1 GRATE)."
8. EXISTING BARS EXPOSED BY BREAK -BACK SHALL BE CLEANED AND BENT INTO POSITION TO PROVIDE A TIE TO THE NEW CONCRETE EXTENSION FOR TYPE "G" INLET.

DROP INLET TYPE C & G DETAILS

TXDOT

DALLAS DISTRICT STANDARD

REVISED ON 9/10/08

FED. RD. DIV. NO.	STATE PROJECT NO.		SHEET NO.
6	SEE TITLE SHEET		308
STATE	STATE DIST. NO.	COUNTY	
TEXAS	18	COLLIN	
CONTROL	SECTION	JOB	HIGHWAY NO.
0091	207	01	289

P-201107-01

STD 7

DISCLAIMER:
The use of this standard is governed by the "Texas Engineering Practice Act". No warranty of any kind is made by TxDOT for any purpose whatsoever. TxDOT assumes no responsibility for conversions to other formats or for incorrect results or damages resulting from its use.

ACC:

LEVELS DISPLAYED

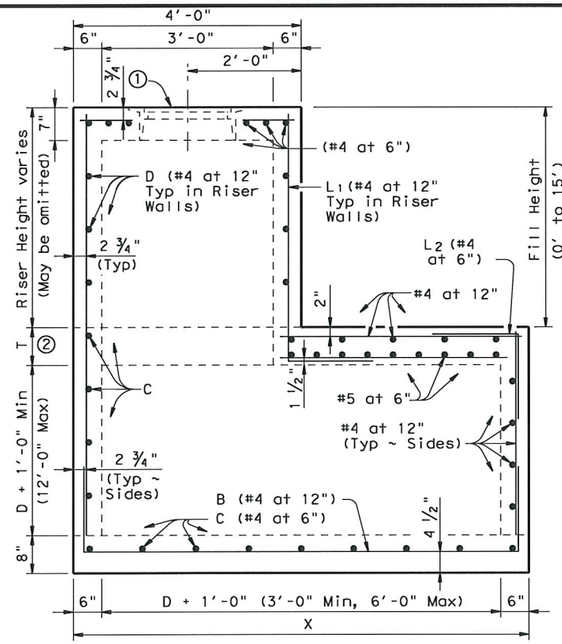

ELEVATION

D = Maximum inside diameter of any Pipe entering the side shown or the opposite side

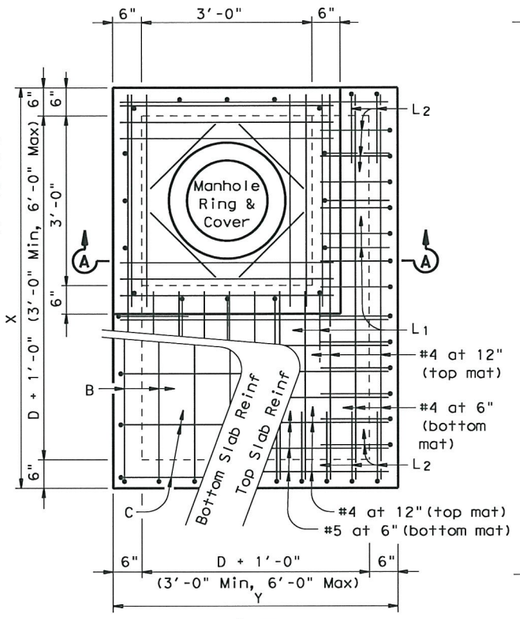

PLAN

MANHOLE WITH CAST-IN-PLACE RISER

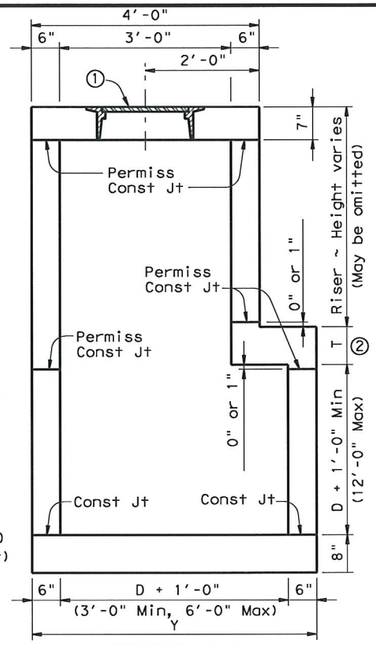

SECTION A-A

② For Fill Height less than or equal to 10', T=8".
For Fill Height between 10' and 15', T=10".

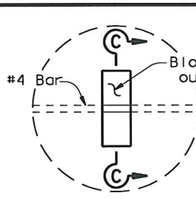

DETAIL "A"

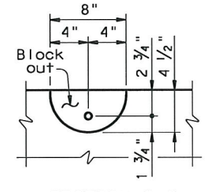

SECTION C-C

LIFTING CATCH

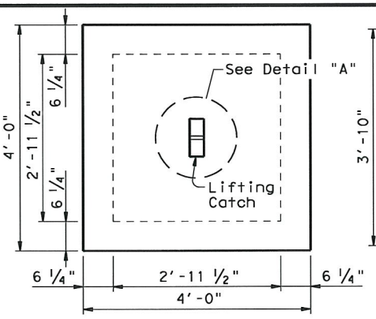

PLAN

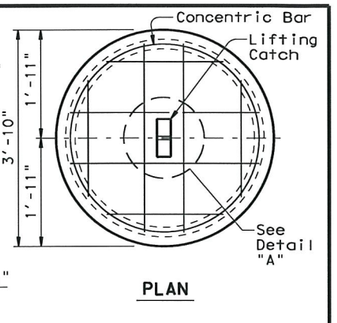

PLAN

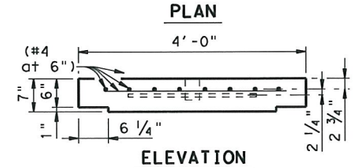

ELEVATION

CAST-IN-PLACE RISER COVER

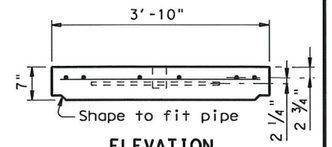

ELEVATION

CONCRETE PIPE RISER COVER

OPTIONAL PRECAST CONCRETE LIFT-OFF COVERS

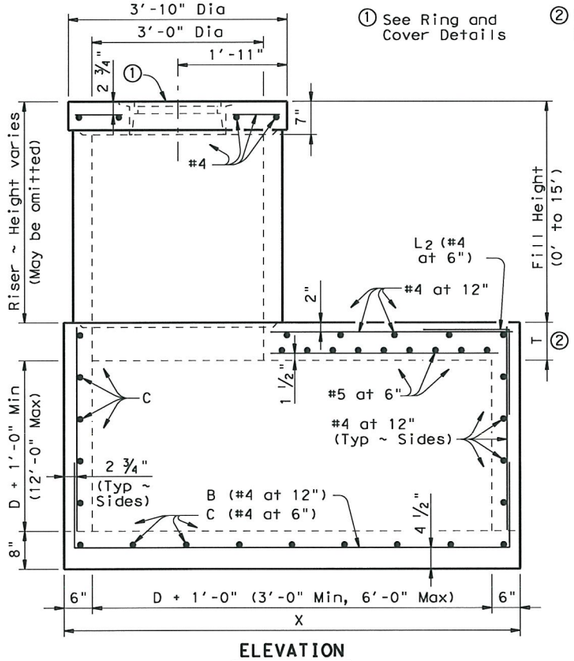

ELEVATION

① See Ring and Cover Details

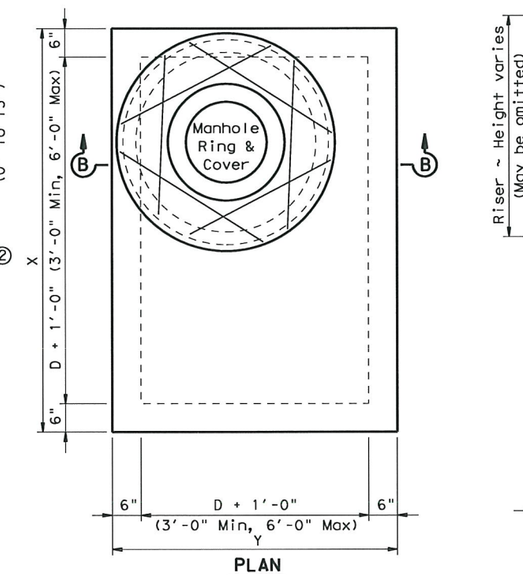

PLAN

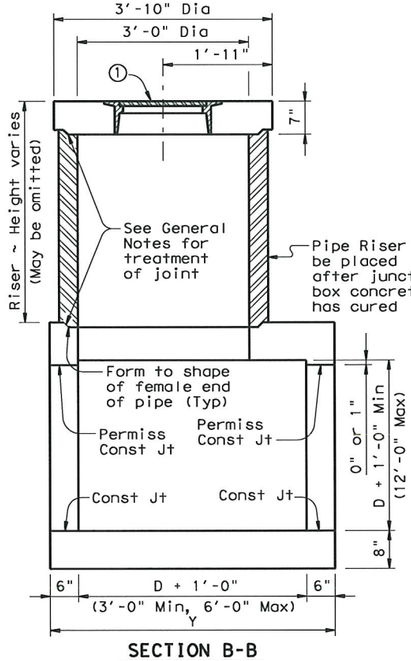

SECTION B-B

OPTIONAL MANHOLE WITH CONCRETE PIPE RISER

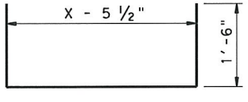

BARS B

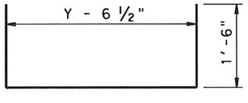

BARS C

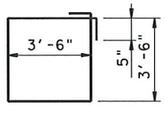

BARS D

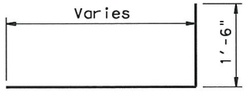

BARS L1

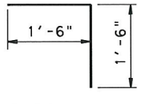

BARS L2

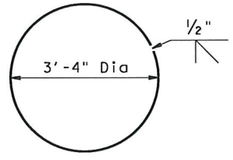

CONCENTRIC BAR

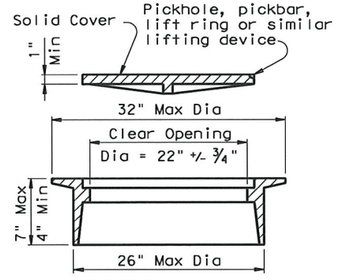

RING AND COVER DETAILS

Approximate Weight = 245 lb

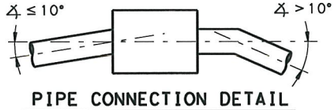

PIPE CONNECTION DETAIL

Connecting pipes should enter within 10° of normal to inlet wall. If necessary, pipe elbow or curved approach alignment should be used to stay within this limit.

GENERAL NOTES:

Unless otherwise shown in the plans, payment will be made for each manhole of the Type M.

When approved, precast inlets with equivalent structural capacity may be furnished. Sealed engineering calculations and drawings shall be submitted for approval prior to construction.

Shop drawings will not be required.

In areas of conflict between reinforcing steel, blockouts, pipes, anchor bolts or other reinforcing steel, the reinforcement shall be bent or adjusted to clear as directed by the Engineer.

The riser may be constructed of reinforced concrete as shown or of Reinforced Concrete Pipe, Class III, in accordance with ASTM Designation C-76. If pipe is used, joints shall conform to the Item "Reinforced Concrete Pipe Culverts". Precast Concrete Lift-Off Cover may be substituted for Ring and Cover.

The riser, either cast-in-place or concrete pipe, may be located in any corner.

All reinforcing steel shall be #4 unless otherwise noted.

Pipes may enter any or all walls. The maximum size of pipe that can be accommodated is 60". More than one pipe may enter a side, subject to the maximum box dimension shown. The clear distance between adjacent pipes should be 9" minimum.

Ring and cover shall conform to the requirements of AASHTO M306, "Standard Specification for Drainage Structure Castings". Materials shall conform to ASTM A48, Class 35B for gray iron castings or ASTM A536, Grade 65-45-12 for ductile iron castings. Aluminum alloy castings shall not be permitted.

All concrete shall be Class "A" (f'c = 3000 psi).

Texas Department of Transportation
Bridge Division

MANHOLE TYPE M
(JUNCTION BOX WITH ACCESS)
15' MAX FILL

MH-M

FILE: mh-mstde.dgn	DN: TxDOT	CK: TER	DW: MCB	CK: TER/GAF
© TxDOT February 2010	DISTRICT	STATE PROJECT NO.		SHEET
REVISIONS	18	SEE THE TITLE SHEET		309
	COUNTY	CONTROL	SECT	JOB	HIGHWAY
	COLL	1068	03	021	SH289

P-20110701

DISCLAIMER:
The use of this standard is governed by the "Texas Engineering Practice Act". No warranty of any kind is made by TxDOT for any purpose whatsoever. TxDOT assumes no responsibility for the conversion of this standard to other formats or for incorrect results or damages resulting from its use.

LEVELS ... LAYED

	ACC:
1	

BOX DATA

SECTION DIMENSIONS					Fill Height	M (Min)	REINFORCING (in²/ft) ②								① Lift Weight (Tons)
S (ft)	H (ft)	T_T (in)	T_B (in)	T_S (in)	(ft)	(in)	A_{S1}	A_{S2}	A_{S3}	A_{S4}	A_{S5}	A_{S6}	A_{S7}	A_{S8}	
4	2	7.5	6	5	<2	-	0.18	0.27	0.15	0.12	0.18	0.18	0.18	0.14	4.5
4	2	5	5	5	2<3	38	0.18	0.19	0.17	0.12	-	-	-	-	3.6
4	2	5	5	5	3-5	38	0.13	0.13	0.13	0.12	-	-	-	-	3.6
4	2	5	5	5	10	38	0.12	0.12	0.12	0.12	-	-	-	-	3.6
4	2	5	5	5	15	38	0.14	0.16	0.16	0.12	-	-	-	-	3.6
4	2	5	5	5	20	38	0.18	0.20	0.21	0.12	-	-	-	-	3.6
4	2	5	5	5	25	38	0.23	0.25	0.25	0.12	-	-	-	-	3.6
4	2	5	5	5	30	38	0.28	0.30	0.30	0.12	-	-	-	-	3.6
4	3	7.5	6	5	<2	-	0.18	0.31	0.18	0.12	0.18	0.18	0.18	0.14	5.0
4	3	5	5	5	2<3	38	0.15	0.23	0.20	0.12	-	-	-	-	4.1
4	3	5	5	5	3-5	38	0.12	0.16	0.16	0.12	-	-	-	-	4.1
4	3	5	5	5	10	38	0.12	0.14	0.14	0.12	-	-	-	-	4.1
4	3	5	5	5	15	38	0.12	0.18	0.18	0.12	-	-	-	-	4.1
4	3	5	5	5	20	38	0.14	0.23	0.24	0.12	-	-	-	-	4.1
4	3	5	5	5	25	38	0.17	0.29	0.29	0.12	-	-	-	-	4.1
4	3	5	5	5	30	38	0.21	0.35	0.35	0.12	-	-	-	-	4.1
4	4	7.5	6	5	<2	-	0.18	0.33	0.20	0.12	0.18	0.18	0.18	0.14	5.5
4	4	5	5	5	2<3	38	0.12	0.26	0.23	0.12	-	-	-	-	4.6
4	4	5	5	5	3-5	38	0.12	0.18	0.18	0.12	-	-	-	-	4.6
4	4	5	5	5	10	38	0.12	0.15	0.15	0.12	-	-	-	-	4.6
4	4	5	5	5	15	38	0.12	0.19	0.20	0.12	-	-	-	-	4.6
4	4	5	5	5	20	38	0.12	0.25	0.25	0.12	-	-	-	-	4.6
4	4	5	5	5	25	38	0.14	0.31	0.31	0.12	-	-	-	-	4.6
4	4	5	5	5	30	38	0.17	0.37	0.37	0.12	-	-	-	-	4.6

① For Box Length = 8'-0"

② A_{S1} thru A_{S4}, A_{S7} and A_{S8} are minimum required areas of reinforcement per linear foot of box length. A_{S6} and A_{S5} are minimum required areas of reinforcement per linear foot of box width.

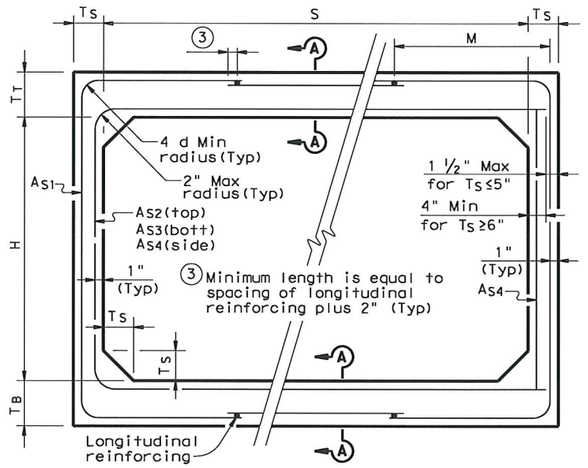

CORNER OPTION "A" CORNER OPTION "B"

FILL HEIGHT 2 FT AND GREATER

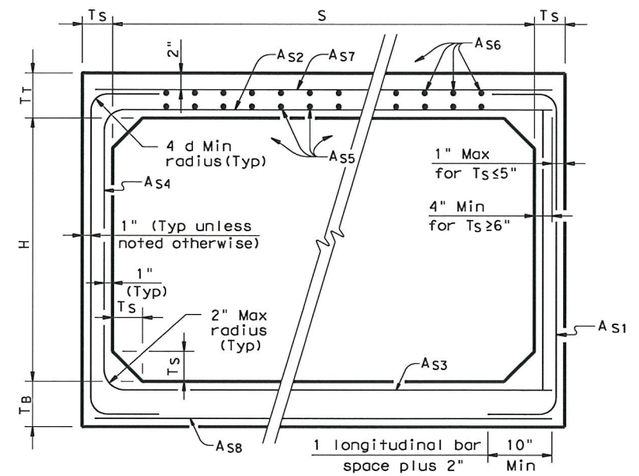

CORNER OPTION "A" CORNER OPTION "B"

FILL HEIGHT LESS THAN 2 FT

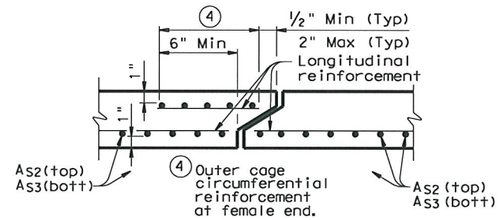

SECTION A-A

(TOP AND BOTTOM SLAB JOINT REINFORCEMENT)

GENERAL NOTES:

Designs shown conform to ASTM C1577.

Refer to ASTM C1577 for information or details not shown.

All concrete shall be Class "H" Concrete with a minimum compressive strength of 5,000 psi.

See SCP-MD standard sheet for miscellaneous details and notes not shown.

In lieu of furnishing the designs shown on this sheet, the contractor may furnish an alternate design that is equal to or exceeds the box design for the design fill height in the table. Shop plans for alternate designs shall be submitted in accordance with Item "Precast Concrete Structures".

HL93 LOADING

Texas Department of Transportation
Bridge Division

SINGLE BOX CULVERTS PRECAST
4'-0" SPAN

SCP-4

FILE: scp04ste.dgn	DN: GAF	CK: LMW	DW: BWH/TxDOT	CK: GAF
©TxDOT February 2010	DISTRICT	STATE PROJECT NO.		SHEET
REVISIONS	18	SEE TITLE SHEET		310
	COUNTY	CONTROL	SECT	JOB	HIGHWAY
	COLLIN	[illegible]	[illegible]	021	SH289

P-20100704

DISCLAIMER:
The use of this standard is governed by the "Texas Engineering Practice Act". No warranty is made by TxDOT for any purpose whatsoever. TxDOT assumes no responsibility for the conversion of this standard to other formats or for incorrect results or damages resulting from its use.

BOX DATA

SECTION DIMENSIONS					Fill Height	M (Min)	REINFORCING (in²/ft) ②								① Lift Weight (Tons)
S (ft)	H (ft)	T_T (in)	T_B (in)	T_S (in)	(ft)	(in)	A_{S1}	A_{S2}	A_{S3}	A_{S4}	A_{S5}	A_{S6}	A_{S7}	A_{S8}	
5	3	8	7	6	<2	-	0.19	0.31	0.21	0.14	0.19	0.19	0.19	0.17	6.6
5	3	6	6	6	2<3	45	0.18	0.24	0.19	0.14	-	-	-	-	5.7
5	3	6	6	6	3-5	36	0.14	0.17	0.16	0.14	-	-	-	-	5.7
5	3	6	6	6	10	36	0.14	0.16	0.17	0.14	-	-	-	-	5.7
5	3	6	6	6	15	35	0.16	0.21	0.22	0.14	-	-	-	-	5.7
5	3	6	6	6	20	35	0.21	0.27	0.28	0.14	-	-	-	-	5.7
5	3	6	6	6	25	35	0.26	0.34	0.34	0.14	-	-	-	-	5.7
5	3	6	6	6	30	35	0.31	0.41	0.41	0.14	-	-	-	-	5.7
5	4	8	7	6	<2	-	0.19	0.33	0.24	0.14	0.19	0.19	0.19	0.17	7.2
5	4	6	6	6	2<3	45	0.16	0.27	0.22	0.14	-	-	-	-	6.3
5	4	6	6	6	3-5	45	0.14	0.19	0.18	0.14	-	-	-	-	6.3
5	4	6	6	6	10	36	0.14	0.18	0.18	0.14	-	-	-	-	6.3
5	4	6	6	6	15	35	0.14	0.23	0.24	0.14	-	-	-	-	6.3
5	4	6	6	6	20	35	0.17	0.30	0.31	0.14	-	-	-	-	6.3
5	4	6	6	6	25	35	0.21	0.37	0.38	0.14	-	-	-	-	6.3
5	4	6	6	6	30	35	0.25	0.44	0.45	0.14	-	-	-	-	6.3
5	5	8	7	6	<2	-	0.19	0.35	0.26	0.14	0.19	0.19	0.19	0.17	7.8
5	5	6	6	6	2<3	45	0.14	0.29	0.24	0.14	-	-	-	-	6.9
5	5	6	6	6	3-5	45	0.14	0.21	0.20	0.14	-	-	-	-	6.9
5	5	6	6	6	10	45	0.14	0.19	0.20	0.14	-	-	-	-	6.9
5	5	6	6	6	15	36	0.14	0.24	0.25	0.14	-	-	-	-	6.9
5	5	6	6	6	20	35	0.15	0.31	0.32	0.14	-	-	-	-	6.9
5	5	6	6	6	25	35	0.18	0.38	0.39	0.14	-	-	-	-	6.9
5	5	6	6	6	30	35	0.21	0.46	0.47	0.14	-	-	-	-	6.9
5	2	8	7	6	<2	-	0.20	0.31	0.20	0.14	0.22	0.19	0.19	0.17	6.0
5	2	6	6	6	30	44	0.39	0.33	0.34	0.14	-	-	-	-	5.1

⑤

① For Box Length = 8'-0"

② A_{S1} thru A_{S4}, A_{S7} and A_{S8} are minimum required areas of reinforcement per linear foot of box length. A_{S6} and A_{S5} are minimum required areas of reinforcement per linear foot of box width.

⑤ These designs were created by TxDOT and are not shown in the ASTM Specifications.

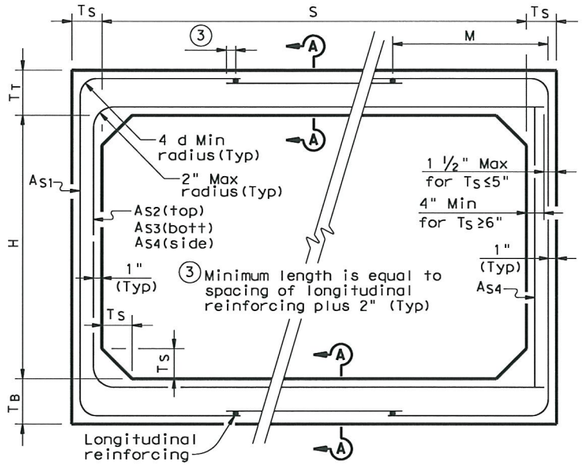

CORNER OPTION "A" CORNER OPTION "B"

FILL HEIGHT 2 FT AND GREATER

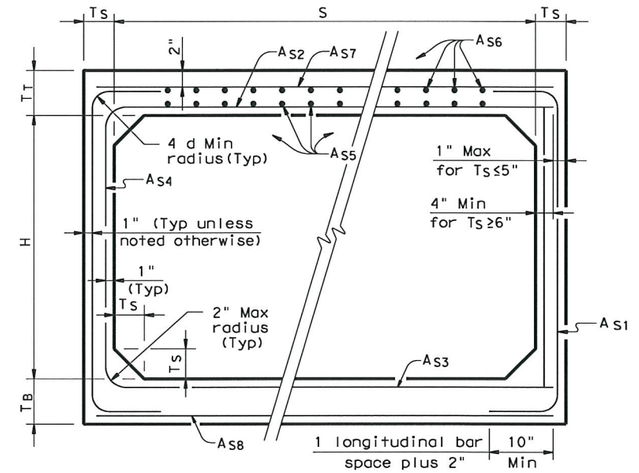

CORNER OPTION "A" CORNER OPTION "B"

FILL HEIGHT LESS THAN 2 FT

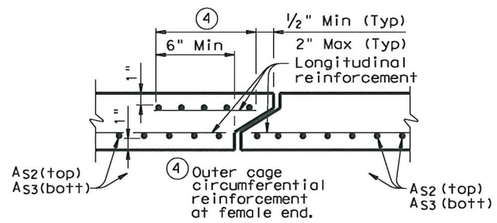

SECTION A-A

(TOP AND BOTTOM SLAB JOINT REINFORCEMENT)

GENERAL NOTES:

Designs shown conform to ASTM C1577.

Refer to ASTM C1577 for information or details not shown.

All concrete shall be Class "H" Concrete with a minimum compressive strength of 5,000 psi.

See SCP-MD standard sheet for miscellaneous details and notes not shown.

In lieu of furnishing the designs shown on this sheet, the contractor may furnish an alternate design that is equal to or exceeds the box design for the design fill height in the table. Shop plans for alternate designs shall be submitted in accordance with Item "Precast Concrete Structures".

HL93 LOADING

Texas Department of Transportation
Bridge Division

SINGLE BOX CULVERTS PRECAST
5'-0" SPAN

SCP-5

FILE: scp05ste.dgn	DN: GAF	CK: LMW	DW: BWH/TxDOT	CK: GAF
©TxDOT February 2010	DISTRICT	STATE PROJECT NO.		SHEET
REVISIONS	18	SEE TITLE SHEET		311
	COUNTY	CONTROL	SECT	JOB	HIGHWAY
	COLLIN	0918	03	021	SH289

P-2010701

LEVELS | ACC: | APVED | 1

DISCLAIMER:
The use of this standard is governed by the "Texas Engineering Practice Act". No warranty of any kind is made by TxDOT for any purpose whatsoever. TxDOT assumes no responsibility for the conversion of this standard to other formats or for incorrect results or damages resulting from its use.

BOX DATA

SECTION DIMENSIONS					Fill Height	M (Min)	REINFORCING (in²/ft) ②								① Liff Weight (Tons)
S (ft)	H (ft)	T_T (in)	T_B (in)	T_S (in)	(ft)	(in)	A_{S1}	A_{S2}	A_{S3}	A_{S4}	A_{S5}	A_{S6}	A_{S7}	A_{S8}	
6	3	8	7	7	<2	-	0.20	0.31	0.22	0.17	0.19	0.19	0.19	0.17	7.9
6	3	7	7	7	2<3	43	0.21	0.24	0.19	0.17	-	-	-	-	7.5
6	3	7	7	7	3-5	39	0.17	0.18	0.17	0.17	-	-	-	-	7.5
6	3	7	7	7	10	39	0.17	0.18	0.19	0.17	-	-	-	-	7.5
6	3	7	7	7	15	38	0.22	0.24	0.24	0.17	-	-	-	-	7.5
6	3	7	7	7	20	38	0.28	0.31	0.31	0.17	-	-	-	-	7.5
6	3	7	7	7	25	38	0.35	0.38	0.39	0.17	-	-	-	-	7.5
6	3	7	7	7	30	38	0.42	0.46	0.46	0.17	-	-	-	-	7.5
6	4	8	7	7	<2	-	0.19	0.34	0.25	0.17	0.19	0.19	0.19	0.17	8.6
6	4	7	7	7	2<3	43	0.19	0.27	0.21	0.17	-	-	-	-	8.2
6	4	7	7	7	3-5	39	0.17	0.21	0.19	0.17	-	-	-	-	8.2
6	4	7	7	7	10	39	0.17	0.20	0.21	0.17	-	-	-	-	8.2
6	4	7	7	7	15	38	0.18	0.27	0.27	0.17	-	-	-	-	8.2
6	4	7	7	7	20	38	0.24	0.34	0.35	0.17	-	-	-	-	8.2
6	4	7	7	7	25	38	0.29	0.43	0.42	0.17	-	-	-	-	8.2
6	4	7	7	7	30	38	0.35	0.51	0.52	0.17	-	-	-	-	8.2
6	5	8	7	7	<2	-	0.19	0.37	0.28	0.17	0.19	0.19	0.19	0.17	9.3
6	5	7	7	7	2<3	43	0.17	0.30	0.24	0.17	-	-	-	-	8.9
6	5	7	7	7	3-5	43	0.17	0.23	0.21	0.17	-	-	-	-	8.9
6	5	7	7	7	10	39	0.17	0.22	0.23	0.17	-	-	-	-	8.9
6	5	7	7	7	15	38	0.17	0.28	0.29	0.17	-	-	-	-	8.9
6	5	7	7	7	20	38	0.20	0.37	0.38	0.17	-	-	-	-	8.9
6	5	7	7	7	25	38	0.25	0.45	0.46	0.17	-	-	-	-	8.9
6	5	7	7	7	30	38	0.30	0.54	0.55	0.17	-	-	-	-	8.9
6	6	8	7	7	<2	-	0.19	0.38	0.30	0.17	0.19	0.19	0.19	0.17	10.0
6	6	7	7	7	2<3	52	0.17	0.32	0.26	0.17	-	-	-	-	9.6
6	6	7	7	7	3-5	52	0.17	0.24	0.22	0.17	-	-	-	-	9.6
6	6	7	7	7	10	43	0.17	0.23	0.24	0.17	-	-	-	-	9.6
6	6	7	7	7	15	39	0.17	0.29	0.31	0.17	-	-	-	-	9.6
6	6	7	7	7	20	39	0.18	0.38	0.39	0.17	-	-	-	-	9.6
6	6	7	7	7	25	38	0.23	0.46	0.48	0.17	-	-	-	-	9.6
6	6	7	7	7	30	38	0.27	0.55	0.57	0.17	-	-	-	-	9.6

① For Box Length = 8'-0"

② A_{S1} thru A_{S4}, A_{S7} and A_{S8} are minimum required areas of reinforcement per linear foot of box length. A_{S6} and A_{S5} are minimum required areas of reinforcement per linear foot of box width.

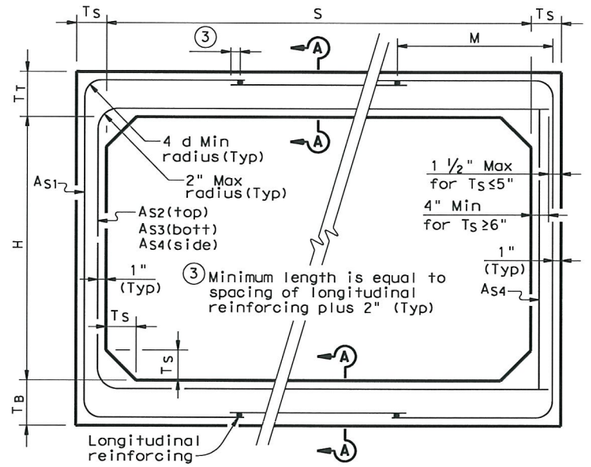

CORNER OPTION "A" CORNER OPTION "B"

FILL HEIGHT 2 FT AND GREATER

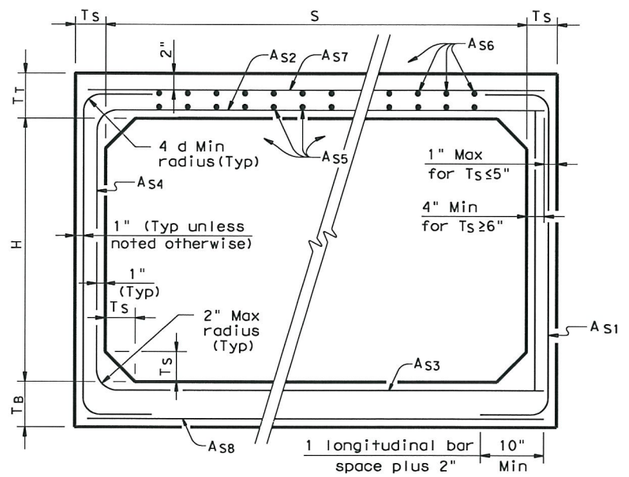

CORNER OPTION "A" CORNER OPTION "B"

FILL HEIGHT LESS THAN 2 FT

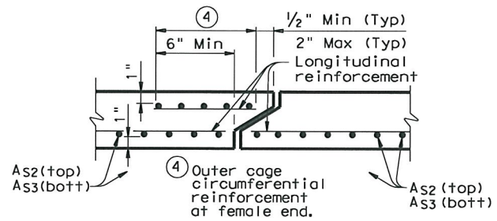

SECTION A-A

(TOP AND BOTTOM SLAB JOINT REINFORCEMENT)

GENERAL NOTES:

Designs shown conform to ASTM C1577. Refer to ASTM C1577 for information or details not shown.

All concrete shall be Class "H" Concrete with a minimum compressive strength of 5,000 psi.

See SCP-MD standard sheet for miscellaneous details and notes not shown.

In lieu of furnishing the designs shown on this sheet, the contractor may furnish an alternate design that is equal to or exceeds the box design for the design fill height in the table. Shop plans for alternate designs shall be submitted in accordance with Item "Precast Concrete Structures".

HL93 LOADING

Texas Department of Transportation
Bridge Division

SINGLE BOX CULVERTS PRECAST
6'-0" SPAN

SCP-6

FILE: scp06ste.dgn	DN: GAF	CK: LMW	DW: BWH/TxDOT	CK: GAF
©TxDOT February 2010	DISTRICT	STATE PROJECT NO.		SHEET
REVISIONS	18	SEE TITLE SHEET		312
	COUNTY	CONTROL	SECT	JOB	HIGHWAY
	COLLIN	0918	03	0021	SH289

P-201107-01

ACC:
LEVELS

DISCLAIMER:
The use of this standard is governed by the "Texas Engineering Practice Act". No warranty of any kind is made by TxDOT for any purpose whatsoever. TxDOT assumes no responsibility for the conversion of this standard to other formats or for incorrect results or damages resulting from its use.

BOX DATA

SECTION DIMENSIONS					Fill Height	M (Min)	REINFORCING (in²/ft) ②								① Liff Weight (Tons)
S (ft)	H (ft)	T_T (in)	T_B (in)	T_S (in)	(ft)	(in)	A_{S1}	A_{S2}	A_{S3}	A_{S4}	A_{S5}	A_{S6}	A_{S7}	A_{S8}	
7	4	8	8	8	<2	-	0.21	0.34	0.25	0.19	0.19	0.19	0.19	0.19	10.4
7	4	8	8	8	2<3	43	0.23	0.28	0.28	0.19	-	-	-	-	10.4
7	4	8	8	8	3-5	43	0.19	0.22	0.19	0.19	-	-	-	-	10.4
7	4	8	8	8	10	43	0.19	0.23	0.23	0.19	-	-	-	-	10.4
7	4	8	8	8	15	41	0.24	0.30	0.30	0.19	-	-	-	-	10.4
7	4	8	8	8	20	41	0.31	0.38	0.39	0.19	-	-	-	-	10.4
7	4	8	8	8	25	41	0.38	0.47	0.48	0.19	-	-	-	-	10.4
7	4	8	8	8	30	41	0.46	0.57	0.57	0.19	-	-	-	-	10.4
7	5	8	8	8	<2	-	0.19	0.36	0.27	0.19	0.19	0.19	0.19	0.19	11.2
7	5	8	8	8	2<3	47	0.21	0.31	0.31	0.19	-	-	-	-	11.2
7	5	8	8	8	3-5	43	0.19	0.24	0.21	0.19	-	-	-	-	11.2
7	5	8	8	8	10	43	0.19	0.25	0.26	0.19	-	-	-	-	11.2
7	5	8	8	8	15	41	0.21	0.32	0.33	0.19	-	-	-	-	11.2
7	5	8	8	8	20	41	0.27	0.41	0.42	0.19	-	-	-	-	11.2
7	5	8	8	8	25	41	0.33	0.51	0.52	0.19	-	-	-	-	11.2
7	5	8	8	8	30	41	0.40	0.61	0.62	0.19	-	-	-	-	11.2
7	6	8	8	8	<2	-	0.19	0.38	0.30	0.19	0.19	0.19	0.19	0.19	12.0
7	6	8	8	8	2<3	59	0.19	0.33	0.34	0.19	-	-	-	-	12.0
7	6	8	8	8	3-5	47	0.19	0.25	0.23	0.19	-	-	-	-	12.0
7	6	8	8	8	10	43	0.19	0.26	0.27	0.19	-	-	-	-	12.0
7	6	8	8	8	15	41	0.19	0.34	0.35	0.19	-	-	-	-	12.0
7	6	8	8	8	20	41	0.24	0.43	0.45	0.19	-	-	-	-	12.0
7	6	8	8	8	25	41	0.29	0.53	0.55	0.19	-	-	-	-	12.0
7	6	8	8	8	30	41	0.35	0.64	0.65	0.19	-	-	-	-	12.0
7	7	8	8	8	<2	-	0.19	0.40	0.33	0.19	0.19	0.19	0.19	0.19	12.8
7	7	8	8	8	2<3	59	0.19	0.36	0.37	0.19	-	-	-	-	12.8
7	7	8	8	8	3-5	59	0.19	0.27	0.25	0.19	-	-	-	-	12.8
7	7	8	8	8	10	47	0.19	0.27	0.29	0.19	-	-	-	-	12.8
7	7	8	8	8	15	43	0.19	0.35	0.37	0.19	-	-	-	-	12.8
7	7	8	8	8	20	43	0.22	0.44	0.46	0.19	-	-	-	-	12.8
7	7	8	8	8	25	43	0.27	0.54	0.57	0.19	-	-	-	-	12.8
7	7	8	8	8	30	41	0.32	0.65	0.67	0.19	-	-	-	-	12.8
7	3	8	8	8	<2	-	0.28	0.36	0.24	0.19	0.21	0.19	0.19	0.19	9.6
7	3	8	8	8	30	58	0.53	0.49	0.50	0.19	-	-	-	-	9.6

⑤

① For Box Length = 8'-0"

② A_{S1} thru A_{S4}, A_{S7} and A_{S8} are minimum required areas of reinforcement per linear foot of box length. A_{S6} and A_{S5} are minimum required areas of reinforcement per linear foot of box width.

⑤ These designs were created by TxDOT and are not shown in the ASTM Specifications.

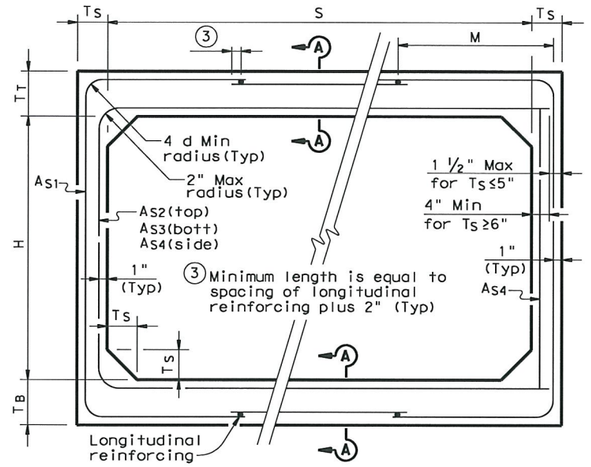

CORNER OPTION "A" CORNER OPTION "B"

FILL HEIGHT 2 FT AND GREATER

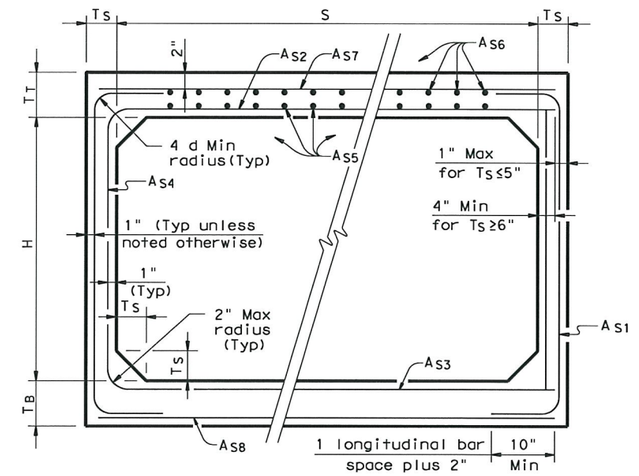

CORNER OPTION "A" CORNER OPTION "B"

FILL HEIGHT LESS THAN 2 FT

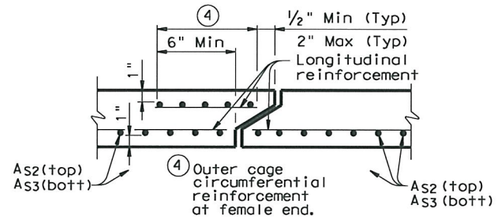

SECTION A-A

(TOP AND BOTTOM SLAB JOINT REINFORCEMENT)

GENERAL NOTES:

Designs shown conform to ASTM C1577. Refer to ASTM C1577 for information or details not shown.

All concrete shall be Class "H" Concrete with a minimum compressive strength of 5,000 psi.

See SCP-MD standard sheet for miscellaneous details and notes not shown.

In lieu of furnishing the designs shown on this sheet, the contractor may furnish an alternate design that is equal to or exceeds the box design for the design fill height in the table. Shop plans for alternate designs shall be submitted in accordance with Item "Precast Concrete Structures".

HL93 LOADING

Texas Department of Transportation
Bridge Division

SINGLE BOX CULVERTS PRECAST
7'-0" SPAN

SCP-7

FILE: scp07ste.dgn	DN: GAF	CK: LMW	DW: BWH/TxDOT	CK: GAF
©TxDOT February 2010	DISTRICT	STATE PROJECT NO.		SHEET
REVISIONS	18	SEE TITLE SHEET		313
	COUNTY	CONTROL	SECT	JOB	HIGHWAY
	COLLIN	009	07	0021	SH289

P-20100701

LEVELS U... AVED ACC:
1

DISCLAIMER:
The use of this standard is governed by the "Texas Engineering Practice Act". No warranty of any kind is made by TxDOT for any purpose whatsoever. TxDOT assumes no responsibility for the conversion of this standard to other formats or for incorrect results or damages resulting from its use.

TABLE OF DIMENSIONS & REINFORCING STEEL
(Wings for One Structure End)

Dimensions					Variable Reinforcing				Estimated ④ Quantities per ft of wing (2~Wings)		Estimated Quantities per ft of Toewall (1~Toewall)	
					Bars J1		Bars J2					
Maximum Wingwall Height Hw	W	X	Y	Z	Size	Spa	Size	Spa	Reinf (Lb/Ft)	Conc (CY/Ft)	Reinf (Lb/Ft)	Conc (CY/Ft)
2'-6"	2'-10"	10"	1'- 0"	7"	#4	1'-0"	#4	1'-0"	48.64	0.406	6.85	0.071
2'-9"	2'-10"	10"	1'- 0"	7"	#4	1'-0"	#4	1'-0"	49.31	0.424	6.85	0.071
3'-0"	2'-10"	10"	1'- 0"	7"	#4	1'-0"	#4	1'-0"	49.98	0.444	6.85	0.071
3'-3"	2'-10"	10"	1'- 0"	7"	#4	1'-0"	#4	1'-0"	53.32	0.462	6.85	0.071
3'-6"	2'-10"	10"	1'- 0"	7"	#4	1'-0"	#4	1'-0"	53.98	0.480	6.85	0.071
4'-0"	3'- 2"	1'- 2"	1'- 0"	7"	#4	1'-0"	#4	1'-0"	55.77	0.532	6.85	0.071
4'-6"	3'- 2"	1'- 2"	1'- 0"	7"	#4	1'-0"	#4	1'-0"	59.77	0.568	6.85	0.071
5'-0"	3'- 9"	1'- 7"	1'- 2"	7"	#4	1'-0"	#4	1'-0"	63.45	0.632	6.96	0.075
5'-6"	3'- 9"	1'- 7"	1'- 2"	7"	#4	1'-0"	#4	1'-0"	67.46	0.668	6.96	0.075
6'-0"	4'- 4"	2'- 0"	1'- 4"	7"	#5	1'-0"	#5	1'-0"	80.67	0.730	7.07	0.078
6'-6"	4'- 4"	2'- 0"	1'- 4"	7"	#5	1'-0"	#5	1'-0"	85.05	0.768	7.07	0.078
7'-0"	5'- 0"	2'- 3"	1'- 9"	8"	#5	1'-0"	#5	1'-0"	92.15	0.864	8.07	0.093
7'-6"	5'- 0"	2'- 3"	1'- 9"	8"	#5	1'-0"	#5	1'-0"	96.54	0.902	8.07	0.093
8'-0"	5'- 6"	2'- 8"	1'-10"	8"	#5	6"	#5	6"	139.04	0.962	8.13	0.095
8'-6"	5'- 6"	2'- 8"	1'-10"	8"	#5	6"	#5	6"	144.47	1.000	8.13	0.095
9'-6"	6'- 0"	2'-10"	2'- 2"	9"	#5	6"	#5	6"	156.93	1.136	8.41	0.110
10'-6"	6'- 5"	3'- 0"	2'- 5"	9"	#6	6"	#5	6"	196.27	1.234	8.57	0.117
11'-6"	7'- 2"	3'- 6"	2'- 8"	11"	#6	6"	#6	6"	230.13	1.438	9.52	0.140
12'-6"	7'- 8"	3'- 9"	2'-11"	1'- 0"	#7	6"	#6	6"	283.41	1.592	9.74	0.157
13'-6"	8'- 2"	4'- 0"	3'- 2"	1'- 2"	#8	6"	#6	6"	348.72	1.804	10.02	0.186
14'-6"	8'-10"	4'- 5"	3'- 5"	1'- 4"	#9	6"	#6	6"	432.94	2.046	10.30	0.218
15'-6"	9'- 6"	4'-10"	3'- 8"	1'- 6"	#9	6"	#7	6"	489.52	2.302	11.24	0.253
16'-0"	9'-11"	5'- 0"	3'-11"	1'- 7"	#9	6"	#7	6"	505.72	2.448	11.47	0.279

TABLE OF WINGWALL REINFORCING (2~Wings)

Bar	Size	No.	Spa
D1	#6	~	1'-0"
D2	#6	~	1'-0"
E1	#4	~	1'-0"
F	#4	~	1'-0"
G	#6	~	8"
M1	#4	4	~
P	#4	~	1'-0"
V	#4	~	1'-0"

TABLE OF TOEWALL REINFORCING

Bar	Size	No	Spa
J3	#4	~	1'-0"
M2	#4	2	~
E2	#4	~	1'-0"

WING DIMENSION CALCULATIONS:

Formulas: (All values are in Feet)

Hw = H + T + C

Lw = (Hw) (SL) ÷ Cosine (Θ)

For Cast-in-place culverts:

Ltw = [(N) (S) + (N + 1) (U)] ÷ (Cosine Θ)

For Precast culverts:

Ltw = [(N) (2 U + S) + (N - 1) (0.5')] ÷ (Cosine Θ)

Total Wingwall Area (Two Wings ~ S.F.) = (2) (Hw) (Lw)

Hw = Height of Wingwall
Lw = Length of Wingwall
Ltw = Culvert Toewall Length
N = Number of Culvert Spans
SL:1 = Channel Slope ratio. (Horizontal: 1 Vertical, Usual value is 2:1)
Θ = Culvert Skew

See applicable box culvert standard for S, H, T and U values.

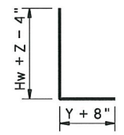

BARS J1

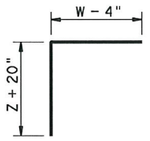

BARS J2

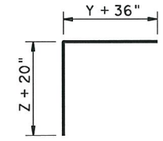

BARS J3

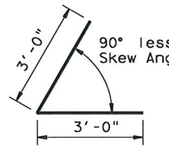

BARS D1

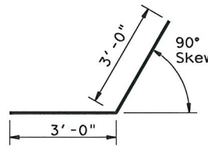

BARS D2

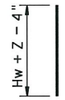

BARS V

1. Skew Angle = 0°
2. At discharge end, chamfer may be ¾".
3. For 15° Skew ~ 1"
   For 30° Skew ~ 2"
   For 45° Skew ~ 3"
4. Quantities shown are for two wings. To determine total quantities for two wings, multiply the tabulated values by Lw. Quantities shown do not include weight for Bars D.
5. Provide weepholes for Hw = 5'-0" and greater. Fill around weepholes with coarse gravel.
6. Extend Bars E2 1'-6" minimum into the wingwall footing.
7. Lap Bars M1 1'-6" minimum with Bars M2.
8. Bars G shall be equally spaced at 8" maximum, placed as shown. There shall be at least two pair Bars G per wing.
9. 0" min to 5'-0" max. Estimated curb heights are shown elsewhere in the plans. For structures with pedestrian rail, bicycle rail or curbs taller than 1'-0", refer to ECD standard. For structures with T6 bridge rail, refer to T6-CM standard. For structures with traffic rail, other than T6, refer to RAC standard.
10. For vehicle safety, the following requirements must be met:
    - For structures without bridge rail, curbs shall project no more than 3" above finished grade.
    - For structures with bridge rail, curbs shall be flush with finished grade.

    Curb heights shall be reduced, if necessary, to meet the above requirements. No changes will be made in quantities and no additional compensation will be allowed for this work.
11. 1'-0" typical. 2'-0" typical when RAC standard is referenced elsewhere in the plans.

GENERAL NOTES:

Designed according to AASHTO LRFD Specifications.
All reinforcing steel shall be Grade 60.
All concrete shall be Class "C" and shall have a minimum compressive strength of 3600 psi.
All reinforcing bars shall be adjusted to provide a minimum of 1 ½" clear cover.
When structure is founded on solid rock, depth of toewalls for culverts and wingwalls may be reduced or eliminated as directed by the Engineer.
See BCS sheet for additional dimensions and information.
The quantities for concrete and reinforcing steel resulting from the formulas given on this sheet are for Contractor's information only.

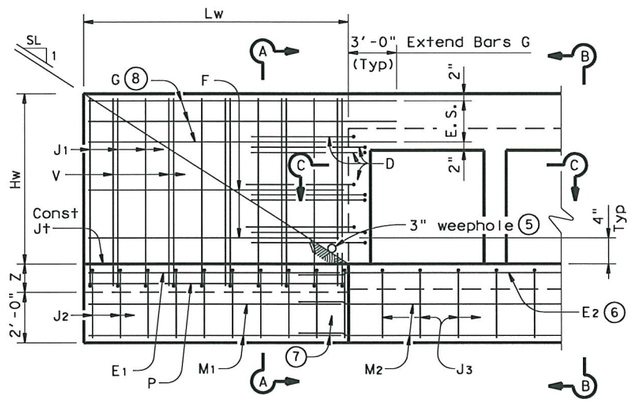

PARTIAL ELEVATION

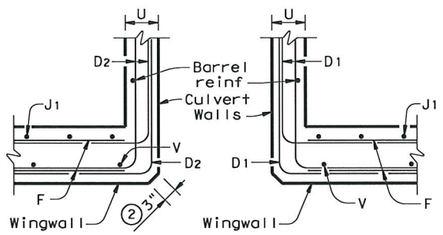

SECTION C-C

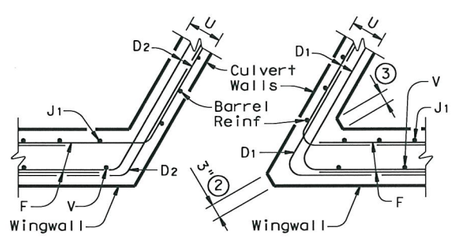

SECTION C-C

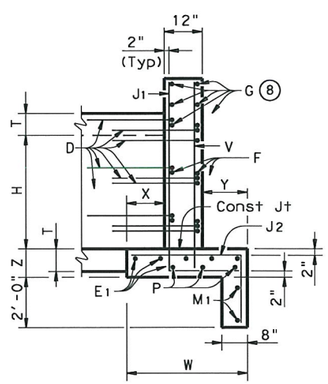

SECTION A-A
(Showing Wing Reinf)

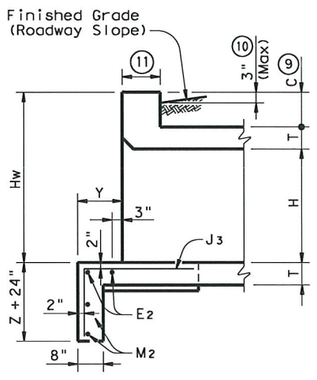

SECTION B-B
(Showing Toewall Reinf)

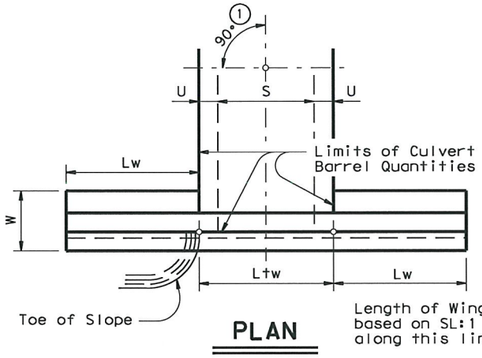

PLAN
DETAILS FOR NON-SKEWED BOX CULVERTS

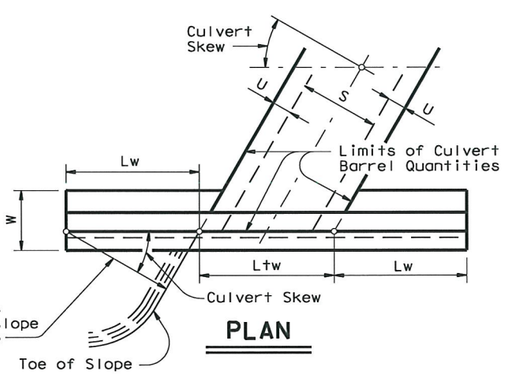

PLAN
DETAILS FOR SKEWED BOX CULVERTS
(Showing 30° Skew)

Texas Department of Transportation
Bridge Division

CONCRETE WINGWALLS
WITH PARALLEL WINGS FOR SKEWED AND NON-SKEWED BOX CULVERTS

PW

FILE: pwstde01.dgn	DN: GAF	CK: CAT	DW: TxDOT	CK: GAF
© TxDOT February 2010	DISTRICT	FEDERAL AID PROJECT		SHEET
REVISIONS	6			314
11-10: Reinforcing Quantities.	COUNTY	CONTROL	SECT	JOB	HIGHWAY
	009	0902	0091	SH 289

P-20100700

ACC:
LEVELS DISPLAYED

TABLE OF VARIABLE DIMENSIONS AND QUANTITIES FOR ONE HEADWALL (4)

SLOPE	DIA OF PIPE, D	Values for one Pipe						Values to be added for each addt'l Pipe		
		W	X	Y	L	Reinf (Lbs)	Conc (CY) (1)	X and W	Reinf (Lbs)	Conc (CY) (1)
2:1	12"	4'- 7 1/2"	2'- 6"	2'-10"	3'- 3 1/4"	84	0.6	1'- 9"	20	0.2
	15"	5'- 5 3/4"	2'- 9 1/2"	3'- 4"	3'-10 1/4"	99	0.7	2'- 2"	24	0.3
	18"	6'- 4 1/4"	3'- 1"	3'-10"	4'- 5"	120	0.9	2'- 8"	32	0.3
	21"	7'- 2 3/4"	3'- 4 1/2"	4'- 4"	5'- 0"	137	1.1	3'- 1"	43	0.4
	24"	8'- 2 1/2"	3'- 9 1/2"	4'-10"	5'- 7"	158	1.3	3'- 7"	50	0.5
	27"	9'- 1"	4'- 1"	5'- 4"	6'- 2"	173	1.5	3'-11"	56	0.6
	30"	9'-11 1/2"	4'- 4 1/2"	5'-10"	6'- 8 3/4"	197	1.7	4'- 4"	65	0.8
	33"	10'-10"	4'- 8"	6'- 4"	7'- 3 3/4"	216	2.0	4'- 8"	71	0.9
	36"	11'- 8 1/4"	4'-11 1/2"	6'-10"	7'-10 3/4"	241	2.2	5'- 1"	81	1.0
	42"	13'- 5 1/4"	5'- 6 1/2"	7'-10"	9'- 0 1/2"	290	2.8	5'-10"	97	1.3
	48"	15'- 9"	6'- 1 1/2"	9'- 4"	10'- 9 1/4"	350	3.8	6'- 7"	117	1.7
	54"	17'- 5 3/4"	6'- 8 1/2"	10'- 4"	11'-11 1/4"	415	4.5	7'- 6"	151	2.1
	60"	19'- 2 3/4"	7'- 3 1/2"	11'- 4"	13'- 1"	469	5.3	8'- 3"	174	2.5
	66"	20'-11 1/2"	7'-10 1/2"	12'- 4"	14'- 3"	530	6.2	8'- 9"	194	2.9
	72"	22'- 8 1/2"	8'- 5 1/2"	13'- 4"	15'- 4 3/4"	587	7.1	9'- 4"	213	3.3
3:1	12"	6'- 3"	2'- 6"	4'- 3"	4'-11"	114	0.8	1'- 9"	22	0.2
	15"	7'- 5"	2'- 9 1/2"	5'- 0"	5'- 9 1/4"	133	1.1	2'- 2"	28	0.3
	18"	8'- 6 3/4"	3'- 1"	5'- 9"	6'- 7 3/4"	166	1.3	2'- 8"	37	0.5
	21"	9'- 8 3/4"	3'- 4 1/2"	6'- 6"	7'- 6"	189	1.6	3'- 1"	48	0.6
	24"	11'- 0"	3'- 9 1/2"	7'- 3"	8'- 4 1/2"	221	2.0	3'- 7"	58	0.7
	27"	12'- 2"	4'- 1"	8'- 0"	9'- 2 3/4"	245	2.3	3'-11"	67	0.8
	30"	13'- 4"	4'- 4 1/2"	8'- 9"	10'- 1 1/4"	287	2.7	4'- 4"	77	1.0
	33"	14'- 5 3/4"	4'- 8"	9'- 6"	10'-11 3/4"	310	3.1	4'- 8"	84	1.2
	36"	15'- 7 3/4"	4'-11 1/2"	10'- 3"	11'-10"	343	3.5	5'- 1"	96	1.4
	42"	17'-11 1/2"	5'- 6 1/2"	11'- 9"	13'- 6 3/4"	424	4.5	5'-10"	119	1.7
	48"	21'- 1 3/4"	6'- 1 1/2"	14'- 0"	16'- 2"	527	6.1	6'- 7"	146	2.3
	54"	23'- 5 1/2"	6'- 8 1/2"	15'- 6"	17'-10 3/4"	618	7.3	7'- 6"	186	2.9
	60"	25'- 9 1/4"	7'- 3 1/2"	17'- 0"	19'- 7 1/2"	707	8.7	8'- 3"	219	3.4
	66"	28'- 1"	7'-10 1/2"	18'- 6"	21'- 4 1/4"	797	10.1	8'- 9"	242	3.9
	72"	30'- 4 3/4"	8'- 5 1/2"	20'- 0"	23'- 1 1/4"	910	11.7	9'- 4"	272	4.4
4:1	12"	7'-10 3/4"	2'- 6"	5'- 8"	6'- 6 1/2"	144	1.1	1'- 9"	24	0.3
	15"	9'- 4"	2'- 9 1/2"	6'- 8"	7'- 8 1/2"	177	1.5	2'- 2"	32	0.4
	18"	10'- 9 1/2"	3'- 1"	7'- 8"	8'-10 1/4"	217	1.9	2'- 8"	42	0.5
	21"	12'- 2 3/4"	3'- 4 1/2"	8'- 8"	10'- 0"	254	2.3	3'- 1"	57	0.7
	24"	13'- 9 1/2"	3'- 9 1/2"	9'- 8"	11'- 2"	295	2.8	3'- 7"	67	0.9
	27"	15'- 3"	4'- 1"	10'- 8"	12'- 3 3/4"	328	3.3	3'-11"	77	1.0
	30"	16'- 8 1/4"	4'- 4 1/2"	11'- 8"	13'- 5 3/4"	379	3.8	4'- 4"	89	1.3
	33"	18'- 1 3/4"	4'- 8"	12'- 8"	14'- 7 1/2"	417	4.5	4'- 8"	101	1.4
	36"	19'- 7"	4'-11 1/2"	13'- 8"	15'- 9 1/4"	464	5.1	5'-1"	115	1.7
	42"	22'- 5 3/4"	5'- 6 1/2"	15'- 8"	18'- 1"	575	6.5	5'-10"	141	2.1
	48"	26'- 6 1/4"	6'- 1 1/2"	18'- 8"	21'- 6 3/4"	720	8.9	6'- 7"	175	2.8
	54"	29'- 5"	6'- 8 1/2"	20'- 8"	23'-10 1/4"	863	10.7	7'- 6"	226	3.6
	60"	32'- 3 3/4"	7'- 3 1/2"	22'- 8"	26'- 2"	984	12.7	8'- 3"	264	4.3
	66"	35'- 2 1/2"	7'-10 1/2"	24'- 8"	28'- 5 3/4"	1126	14.9	8'- 9"	300	4.9
	72"	38'- 1 1/4"	8'- 5 1/2"	26'- 8"	30'- 9 1/2"	1283	17.3	9'- 4"	334	5.6
6:1	12"	11'- 2"	2'- 6"	8'- 6"	9'- 9 3/4"	220	1.9	1'- 9"	28	0.4
	15"	13'- 2 1/4"	2'- 9 1/2"	10'- 0"	11'- 6 1/2"	264	2.5	2'- 2"	37	0.5
	18"	15'- 2 1/2"	3'- 1"	11'- 6"	13'- 3 1/4"	326	3.2	2'- 8"	50	0.7
	21"	17'- 2 3/4"	3'- 4 1/2"	13'- 0"	15'- 0 1/4"	381	3.9	3'- 1"	69	0.9
	24"	19'- 4 1/2"	3'- 9 1/2"	14'- 6"	16'- 9"	447	4.8	3'- 7"	80	1.2
	27"	21'- 4 3/4"	4'- 1"	16'- 0"	18'- 5 3/4"	506	5.7	3'-11"	96	1.4
	30"	23'- 5 1/4"	4'- 4 1/2"	17'- 6"	20'- 2 1/2"	587	6.7	4'- 4"	110	1.7
	33"	25'- 5 1/2"	4'- 8"	19'- 0"	21'-11 1/4"	667	7.8	4'- 8"	127	2.0
	36"	27'- 5 3/4"	4'-11 1/2"	20'- 6"	23'- 8"	727	9.0	5'- 1"	144	2.3
	42"	31'- 6 1/4"	5'- 6 1/2"	23'- 6"	27'- 1 1/2"	914	11.5	5'-10"	179	3.0
	48"	37'- 3 1/2"	6'- 1 1/2"	28'- 0"	32'- 4"	1181	15.9	6'- 7"	231	4.0
	54"	41'- 4 1/4"	6'- 8 1/2"	31'- 0"	35'- 9 1/2"	1412	19.2	7'- 6"	300	5.0
	60"	45'- 4 3/4"	7'- 3 1/2"	34'- 0"	39'- 3"	1619	22.9	8'- 3"	353	6.0

DISCLAIMER:
The use of this standard is governed by the "Texas Engineering Practice Act". No warranty of any kind is made by TxDOT for any purpose whatsoever. TxDOT assumes no responsibility for the conversion of this standard to other formats or for incorrect results or damages resulting from its use.

LEVELS LAYED ACC:

ELEVATION
Showing dimensions

(1) Quantities shown are for concrete pipe and will increase slightly for metal pipe installations.

(2) For vehicle safety, curbs shall project no more than 3" above finished grade. Curb heights shall be reduced, if necessary, to meet these requirements. No changes will be made in quantities and no additional compensation will be allowed for this work.

(3) Provide a 1'-0" footing as shown where required to maintain 4" Min cover for pipes.

(4) Quantities shown are for one structure end only (one headwall).

(5) Min Length = $6" + 3" \times \left(\frac{12 \times H - 7}{12 \times L}\right)$

Max Length = $12 \times H - 3" \times \left(\frac{12 \times H - 7}{12 \times L}\right) - 1"$

(6) Lengths of wings based on SL:1 Slope along this line.

TABLE OF REINFORCING STEEL (4)

Bar	Size	Spa	No.
A	# 4	1'-0"	~
B	# 3	1'-6"	~
C	# 4	1'-0"	~
D	# 3	1'-0"	~
E	# 5	~	4
F	# 5	~	~
G	# 3	~	2
S	# 4	~	6
V	# 4	1'-0"	~
W	# 5	~	4

TABLE OF CONSTANT DIMENSIONS

DIA OF PIPE, D	G	K	H
12"	9"	1'- 0"	2'- 0"
15"	11"	1'- 0"	2'- 3"
18"	1'- 2"	1'- 0"	2'- 6"
21"	1'- 4"	1'- 0"	2'- 9"
24"	1'- 7"	1'- 0"	3'- 0"
27"	1'- 8"	1'- 0"	3'- 3"
30"	1'-10"	1'- 0"	3'- 6"
33"	1'-11"	1'- 0"	3'- 9"
36"	2'- 1"	1'- 0"	4'- 0"
42"	2'- 4"	1'- 0"	4'- 6"
48"	2'- 7"	1'- 3"	5'- 3"
54"	3'- 0"	1'- 3"	5'- 9"
60"	3'- 3"	1'- 3"	6'- 3"
66"	3'- 3"	1'- 3"	6'- 9"
72"	3'- 4"	1'- 3"	7'- 3"

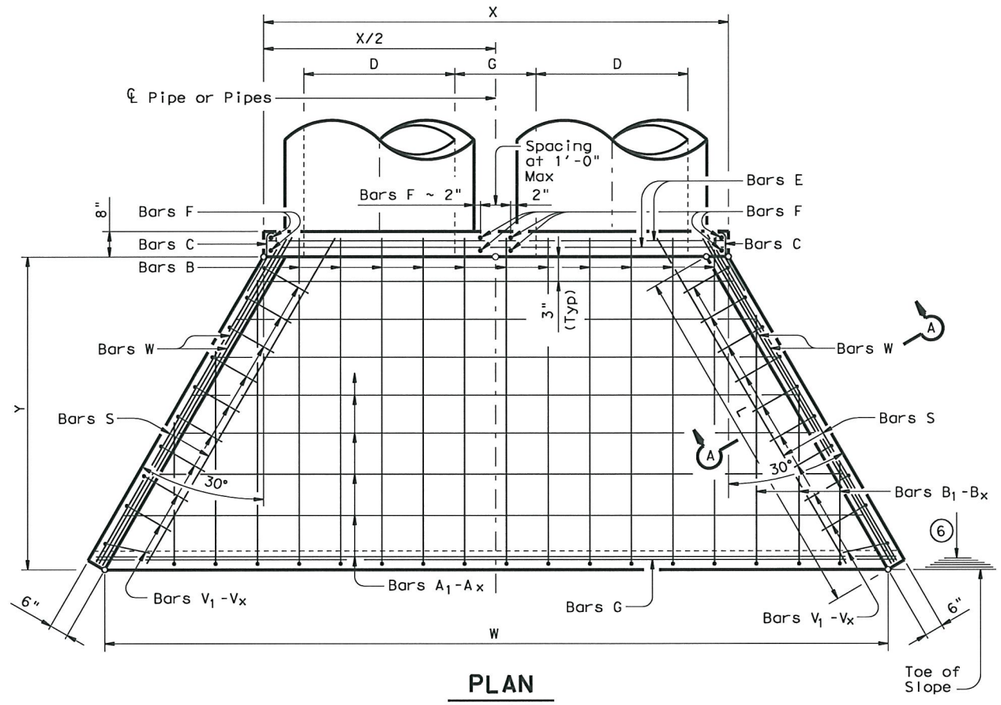

PLAN

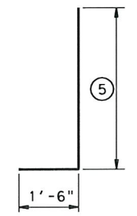

BARS V

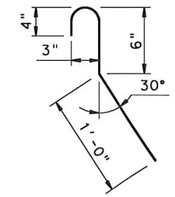

BARS C
(2'-0" long)

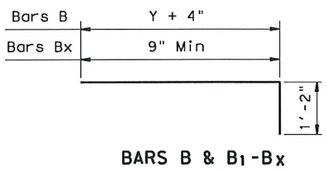

BARS B & B1-Bx

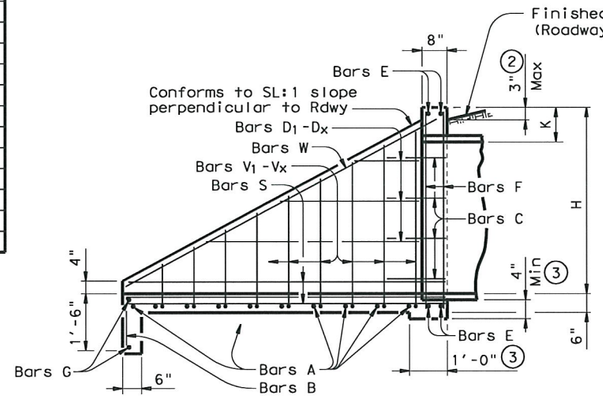

TYPICAL WING ELEVATION

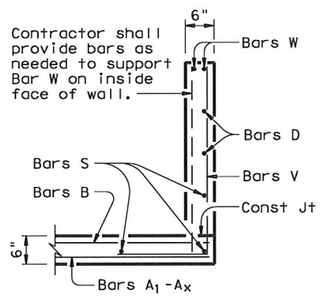

SECTION A-A

GENERAL NOTES:
Designed according to AASHTO LRFD Specifications.
Reinforcing steel shall be placed with the center of the outside layer of bars 2" from the surface of the concrete.
All reinforcing steel shall be Grade 60.
All concrete shall be Class "C" and shall have a minimum compressive strength of 3600 psi.
No bridge rails of any type may be mounted directly to these culvert headwalls.

Texas Department of Transportation
Bridge Division

CONCRETE HEADWALLS WITH FLARED WINGS FOR 0° SKEW PIPE CULVERTS

CH-FW-0

FILE: chfw00se.dgn	DN: TxDOT	CK: TxDOT	DW: TxDOT	CK: GAF
©TxDOT February 2010	DISTRICT	STATE PROJECT NO.		SHEET
REVISIONS	18	SEE TITLE SHEET		315
	COUNTY	CONTROL	SECT	JOB	HIGHWAY
	COLLIN	1068	31	021	SH289

P-20100701