91-4-59

COLLIN CO

DESIGN	FED. RD. DIV. NO.	STATE PROJECT NO.		HIGHWAY NO.
MK	6	C 91-4-55		SH 289
GRAPHICS	STATE	DISTRICT	COUNTY	SHEET NO.
AMW	TEXAS	18	COLLIN	1
CHECK	CONTROL	SECTION	JOB	
NVS / MDH	0091	04	055	

FINAL PLANS

NAME OF CONTRACTOR: _____

DATE OF LETTING: _____

DATE WORK BEGAN: _____

DATE WORK COMPLETED: _____

DATE WORK ACCEPTED: _____

SUMMARY OF CHANGE ORDERS:

STATE OF TEXAS
DEPARTMENT OF TRANSPORTATION

PLANS OF PROPOSED
STATE HIGHWAY IMPROVEMENT

STATE PROJECT

PROJECT NO. C 91-4-55
CSJ: 0091-04-055

SH 289
COLLIN COUNTY

ROADWAY	2010 ADT	2030 ADT	DESIGN SPEED
SH 289 (URBAN)	20,100	31,100	45 MPH
FM 455	4,800	6,700	40 MPH
BUS 289	3,100	4,200	30 MPH
CR & LOCAL STREETS			30 MPH

LIMITS: FROM NORTH OF FM 1461/ BS 289D
TO NORTH OF FM 455 IN CELINA

TOTAL LENGTH OF PROJECT =
ROADWAY = 21467.73 FT = 4.066 MI.
BRIDGES = 127.27 FT = 0.024 MI.
TOTAL = 21595.00 FT. = 4.090 MI.

TYPE OF WORK: FOR THE RECONSTRUCTION WIDENING OF TWO LANE RURAL HIGHWAY
CONSISTING OF: BRIDGE, PAVEMENT, DRAINAGE, STRIPING, SIGNING

BEGIN PROJECT
CSJ 0091-04-055
STA 303+05.00
TRM 0230+1.625

END PROJECT
CSJ 0091-04-055
STA 519+00.00
TRM 0234+1.812

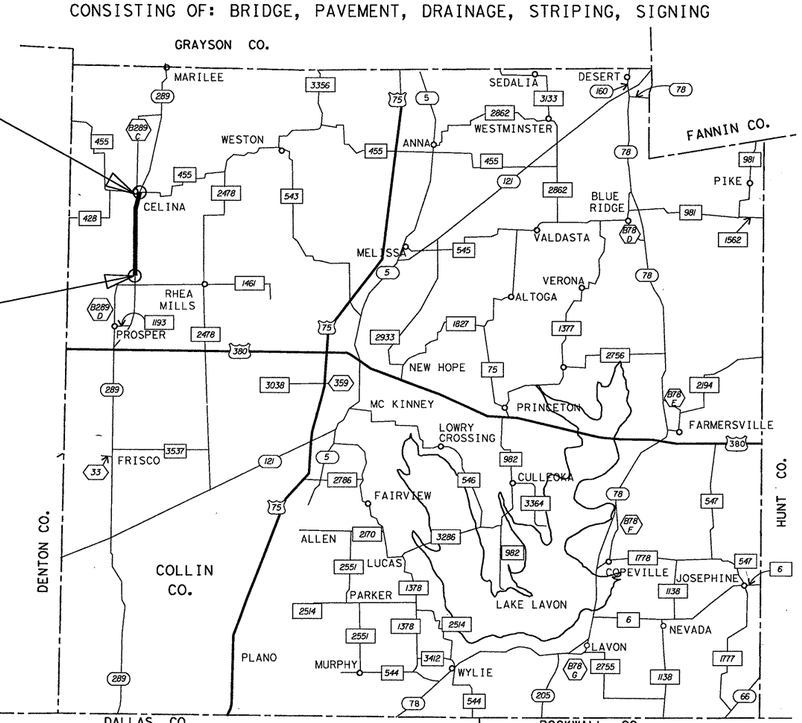

N

COLLIN COUNTY

SCALE 0 1 2 3 4 5 6 MILES

DALLAS DISTRICT

EQUATIONS: NONE
EXCEPTIONS: NONE
RAILROAD CROSSINGS: NONE

NOTE:

SPECIFICATIONS ADOPTED BY THE TEXAS DEPARTMENT OF TRANSPORTATION, JUNE 1, 2004, AND THE CONTRACT PROVISIONS LISTED AND DATED AS FOLLOWS SHALL GOVERN ON THIS PROJECT: SPECIAL LABOR PROVISIONS FOR STATE PROJECTS (000-007)

THE CONTRACTOR SHALL PROVIDE AND ERECT BARRICADES AND WARNING SIGNS IN ACCORDANCE WITH THE BC STANDARD SHEETS INCLUDED IN THIS SET OF PLANS AT POINTS INDICATED AND AT OTHER POINTS AS DIRECTED BY THE ENGINEER.

TDLR Inspection Required

TEXAS DEPARTMENT OF TRANSPORTATION

SUBMITTED FOR LETTING: 4-14 2011
Nicholas V Sena, P.E.
DESIGN ENGINEER

CONCURRENCE: April 13 2011
James R. Hogan, P.E.
TITLE: CITY MANAGER
CITY OF CELINA

RECOMMENDED FOR LETTING: 4/14 2011
Ron Stotts, P.E.
AREA ENGINEER

RECOMMENDED FOR LETTING: 4/15 2011
Moran Sagi, P.E.
DIRECTOR OF TRANSPORTATION PLANNING & DEVELOPMENT

APPROVED FOR LETTING: 20
, P.E.
DIRECTOR, TRAFFIC OPERATIONS DIVISION

RECOMMENDED FOR LETTING: 4/15 2011
Wade Hall, P.E.
DISTRICT ENGINEER

APPROVED FOR LETTING: 5.27.2011
for Ramin T. Thomasian, P.E.
DIRECTOR, DESIGN DIVISION

WORK WAS COMPLETED ACCORDING TO THE PLANS AND CONTRACT.

_____, P.E.
Signature of Registrant & Date

© 2011 by Texas Department of Transportation; all rights reserved

R-201104-01

INDEX OF SHEETS

VOLUME I

SHEET	DESCRIPTION
	I. GENERAL
1	TITLE SHEET
2	INDEX OF SHEETS
3-8	PROJECT LAYOUT WITH ADVANCED WARNING SIGNS
9-16	TYPICAL SECTIONS
17-31	GENERAL NOTES (31 omitted) △2
32-36	ESTIMATE & QUANTITY (36 omitted)
37-44	ROADWAY QUANTITY SUMMARY SHEETS
45-57	DRAINAGE QUANTITY SUMMARY SHEETS
58	TRAFFIC SIGNAL PROJECT SUMMARY SHEET
59-60	SUMMARY OF SMALL SIGNS
61-62	SUMMARY OF SMALL SIGNS FOR TRAFFIC SIGNALS
	II. TRAFFIC CONTROL PLAN
63	TRAFFIC CONTROL PLAN - PHASES NARRATIVE
64-69	TRAFFIC CONTROL PLAN - TYPICAL SECTIONS
70-81	TRAFFIC CONTROL PLAN - PHASE I
82-93	TRAFFIC CONTROL PLAN - PHASE II
94-97	TRAFFIC CONTROL PLAN - PHASE III
98	MAJOR INTERSECTIONS TCP DETAILS
99-100	CR 53/CR 88 INTERSECTION TCP DETAILS
101-103	FM 455/PECAN ST. INTERSECTION TCP DETAILS
104	TCP MISCELLANEOUS DETAILS
# 105-116	BC (1)-07 THRU BC (12)-07
# 117-118	CSB(1)-10
# 119	CSB(7)-10
# 120	TCP (2-1)-98
# 121	WZ (TD)-03
# 122	WZ (STPM)-03
# 123-124	ABSORB-10, ACZ(350)-10A
124A-B	REACT(N)-05
124C	TRACC(N)-05
	III. ROADWAY DETAILS
125-126	SURVEY CONTROL INDEX
127-128	HORIZONTAL & VERTICAL CONTROL DATA SHEETS
129-140	REMOVAL LAYOUT
141	EXISTING SOIL BORING DATA SHEET
142	TEMPORARY ASPHALT DETOUR DETAIL SHEET
143-162	PLAN AND PROFILE
163-173	INTERSECTION DETAILS
174-197	DRIVEWAY DETAILS
198-199	RIPRAP DETAILS
200-201	MISCELLANEOUS ROADWAY DETAILS
# 202	CRCP(1)-09
# 203	omitted
# 204-207	PED-05
# 208	M-10
# 209	JS-94
# 210	MBGF-09
# 211	MBGF(SR)-10A
# 212	MBGF(TL2)-09
# 213	MBGF(MS)-10
# 214, 214A	SGT(7)-10, SGT(8)-09
# 215	CRR
# 216-217	RAC
# 218-221	C402
# 222	TRF
	IV. RETAINING WALL DETAILS
	NONE
	V. DRAINAGE DETAILS
223-225	DOE BRANCH HYDRAULIC DATA
226-228	DOE BRANCH TRIBUTARY H HYDRAULIC DATA
229-231	DOE BRANCH TRIBUTARY G HYDRAULIC DATA
232-234	DOE BRANCH UNNAMED TRIBUTARY #2 HYDRAULIC DATA
235-236	DOE BRANCH BRIDGE CLASS CULVERT LAYOUT
237-238	DOE BRANCH TRIBUTARY H BRIDGE CLASS CULVERT LAYOUT
239-240	DOE BRANCH TRIBUTARY G BRIDGE CLASS CULVERT LAYOUT
241-242	DOE BRANCH UNNAMED TRIBUTARY #2 BRIDGE CLASS CULVERT LAYOUT
243	DOE BRANCH BRIDGE CLASS CULVERT CONSTRUCTION PHASING
244	DOE BRANCH TRIBUTARY H BRIDGE CLASS CULVERT CONSTRUCTION PHASING
245	DOE BRANCH TRIBUTARY G BRIDGE CLASS CULVERT CONSTRUCTION PHASING
246	DOE BRANCH UNNAMED TRIBUTARY #2 BRIDGE CLASS CULVERT CONSTRUCTION PHASING
247-248	PHASE I TEMPORARY SHORING DETAIL
249-250	PHASE II TEMPORARY SHORING DETAIL

VOLUME II

SHEET	DESCRIPTION
	V. DRAINAGE DETAILS (CONT.)
251-254	CULVERT DRAINAGE AREA MAP
255-265	CULVERT LAYOUTS
266-284	STORM SEWER HYDRAULIC DATA
285-305	STORM SEWER DRAINAGE AREAS
306-345	STORM SEWER PLAN AND PROFILE
346	MISCELLANEOUS DRAINAGE DETAILS
# 347-348	CI (TY I) - 08 (MOD) (DAL)
# 349	DROP INLET TYPE C&G DETAILS (DAL)
# 350	MH-M
# 351-352	SCP-3, SCC-3 & 4
# 353-355	SCP-6, SCC-5 & 6, MC-6-16
# 356-357	SCP-7, SCC-7
# 358-360	SCP-8, SCC-8, MC-8-13
# 361-362	SCP-9, MC-9-10
# 363-364	SCP-10, MC-10-7
# 365	SCP-12
# 366-368	SCP-MD, SCC-MD, MC-MD
# 369	PW
# 370	SW-0
# 371	FW-0
# 372	FW-S
# 373	BCS
# 374	ECD
	VI. UTILITIES
	NONE
	VII. BRIDGES
	NONE
	VIII. TRAFFIC ITEMS
375-377	TEMPORARY TRAFFIC SIGNAL LAYOUT SH 289 AT CR 53/CR 88
378-380	TEMPORARY TRAFFIC SIGNAL LAYOUT SH 289 AT FM 455/PECAN ST
381-384	TRAFFIC SIGNAL LAYOUT SH 289 AT CR 53/CR 88
385-388	TRAFFIC SIGNAL LAYOUT SH 289 AT FM 455/PECAN ST
> 389-391	CONSTRUCTION DETAILS FOR SPAN WIRE MOUNTED TRAFFIC SIGNALS (DAL)
> 392	TRAFFIC SIGNAL HEAD IDENTIFICATION (DAL)
> 393	PEDESTRIAN SIGNAL HEAD IDENTIFICATION (DAL)
> 394	VDZ-04 (DAL)
> 395	SMA-80(1)-99 (DAL)
> 396	SMA-80(2)-96 (DAL)
> 397-400	LMA (1)-01 THRU LMA (4)-01
> 401	MA-C-09
> 402	MA-D-07 (DAL)
> 403	TS-FD-99
> 404	LUM-A-99
> 405	RID(LUM1)-07
> 406	RID(LUM2)-07
> 407	TS-CF-04
> 408	INSTALLATION OF BBU (EXTERNAL MOUNT) (DAL)
> 409-413	ED(1)-03 THRU ED(5)-03
> 414	ED(7)-03
> 415	ED(9)-03
> 415A	RID(FND)-11
> 415B-415E	RIP(1)-11 THRU RIP(4)-11
	SIGNING & DELINEATION
416-427	SIGNING LAYOUT
428	GUIDE SIGN DETAILS
# 429	SMD (GEN)-08
# 430-432	SMD (SLIP-1)-08 THRU SMD(SLIP-3)-08
# 433-435	TSR (3)-08 THRU TSR (5)-08
# 436	D&OM (1)-10
# 437	D&OM (VIA)-04
	PAVEMENT MARKINGS
438-449	PAVEMENT MARKING LAYOUT
# 450	PM (1)-03
# 451	PM (2)-10
# 452	PM (4)-10
# 453-454	PM (5)-01 THRU PM (6)-01

△2 Revised 7/5/11 JB

SHEET	DESCRIPTION
	IX. ENVIRONMENTAL ISSUES
455	ENVIRONMENTAL PERMITS, ISSUES AND COMMITMENTS
456	STORMWATER POLLUTION PREVENTION PLAN (SW3P) TITLE SHEET
457-468	STORMWATER POLLUTION PREVENTION PLAN (SW3P) LAYOUT PHASE I
469-480	STORMWATER POLLUTION PREVENTION PLAN (SW3P) LAYOUT PHASE II
# 481-482	EC (2)-93 THRU EC (3)-93
# 483-484	EROSION CONTROL LOGS
# 485	STORMWATER POLLUTION PREVENTION PLAN (SW3P) PROJECT LIMITS SIGN
# 486	VEGETATION ESTABLISHMENT SHEET
# 487	VERTICAL TRACKING FOR EROSION CONTROL
	X. MISCELLANEOUS ITEMS
	NONE

STATE OF TEXAS
NICHOLAS VON SPENCER
93702
LICENSED
PROFESSIONAL ENGINEER

THE STANDARD SHEETS SPECIFICALLY IDENTIFIED WITH A "#" HAVE BEEN ISSUED BY ME AND ARE APPLICABLE TO THIS PROJECT.

Nicholas Von Spencer 4-12-11
NAME DATE

STATE OF TEXAS
LISA D. LAWSON
65131
REGISTERED
PROFESSIONAL ENGINEER

THE STANDARD SHEETS SPECIFICALLY IDENTIFIED WITH A ">" HAVE BEEN ISSUED BY ME AND ARE APPLICABLE TO THIS PROJECT.

Lisa D Lawson 4/12/11
NAME DATE

Texas Department of Transportation
© 2011

INDEX OF SHEETS

DESIGN	FED. RD. DIV. NO.	STATE PROJECT NO.		HIGHWAY NO.
AMW	6	(SEE TITLE SHEET)		SH 289
GRAPHICS AMW	STATE	DISTRICT	COUNTY	SHEET NO.
CHECK NVS	TEXAS	DALLAS	COLLIN	2
CHECK NVS	CONTROL 0091	SECTION 04	JOB 055	

R-201104-01

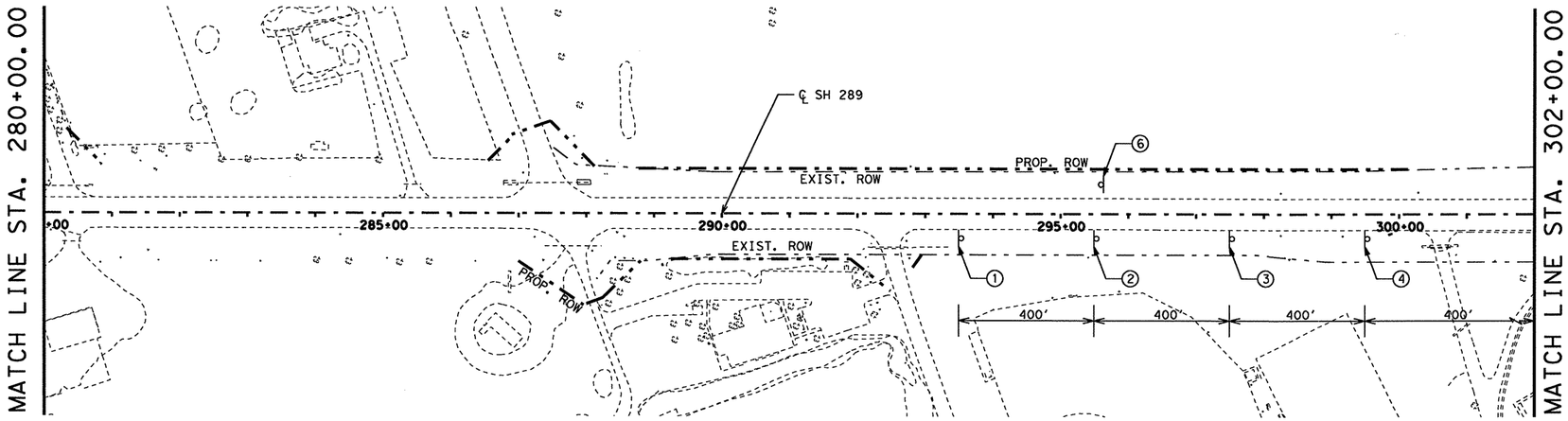

NOTES:

1. COORDINATE ADVANCE WARNING SIGNS WITH ADJACENT CONTRACTORS CONSTRUCTING THE 0091-04-050 AND 0091-03-021 CSJ PROJECTS AS NEEDED.

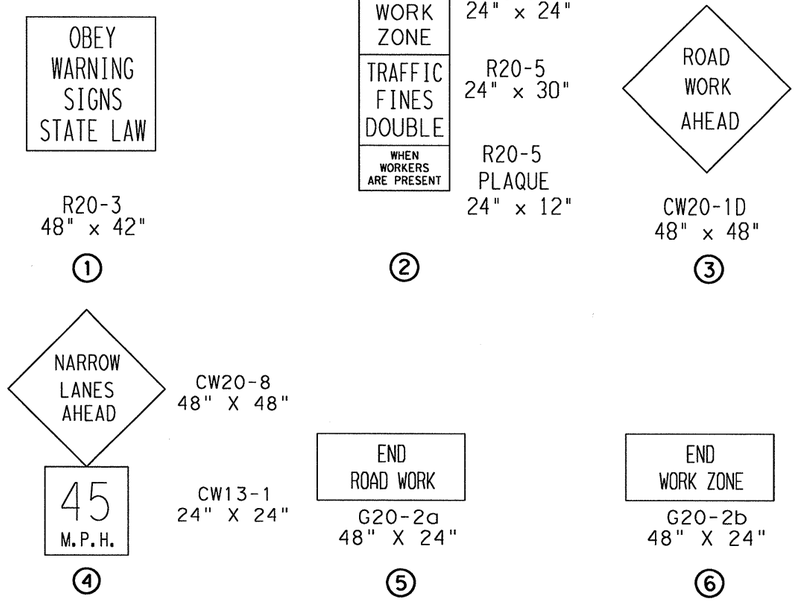

STATE OF TEXAS
NICHOLAS VON SPENCER
93702
LICENSED PROFESSIONAL ENGINEER

Nicholas V Spencer, P.E. 4-7-11
Signature of Registrant & Date

Texas Department of Transportation
© 2011

SH 289
PROJECT LAYOUT
WITH ADVANCED WARNING SIGNS

SCALE: 1"= 200' SHEET 1 OF 6

DESIGN	FED. RD. DIV. NO.	STATE PROJECT NO.		HIGHWAY NO.
AMW	6	(SEE TITLE SHEET)		SH 289
GRAPHICS AMW	STATE	DISTRICT	COUNTY	SHEET NO.
CHECK NVS	TEXAS	18	COLLIN	3
CHECK NVS	CONTROL	SECTION	JOB	
	0091	04	055	

T:\DALDGN*A\SH 289 Celina\THE PLANS\Project Plan layout\PlanLayout1.dgn
4/7/2011

R-201104-01

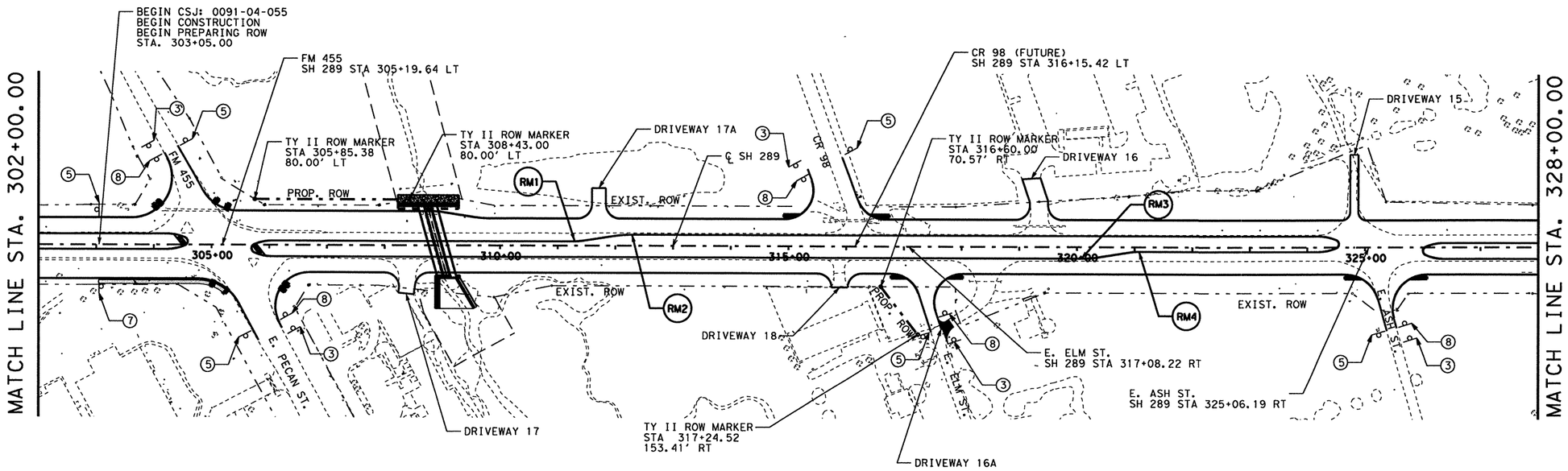

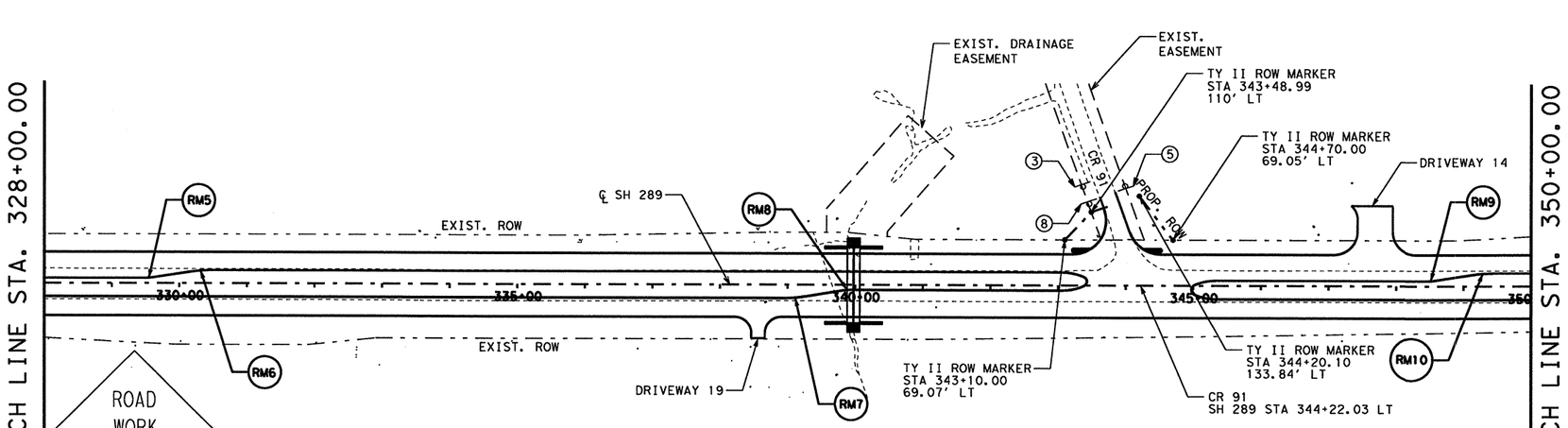

CW20-1D
48" x 48"

③

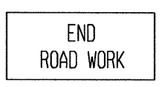

G20-2a
48" X 24"

⑤

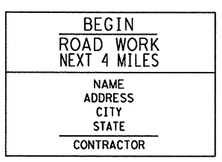

⑦

G20-5T
48" x 24"

G20-6
48" x 30"

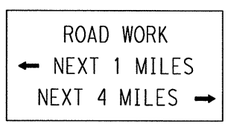

G20-1a
72" X 36"

⑧

SH 289 MEDIAN RADIUS			
RADIUS #	RADIUS (FT)	STATION PI	OFFSET (FT)
RM1	100.00	311+29.14	108 LT
RM2	200.00	312+29.14	180 RT
RM3	200.00	320+07.86	180 LT
RM4	100.00	321+07.86	108 RT
RM5	100.00	329+47.14	108 LT
RM6	200.00	330+47.14	180 RT
RM7	200.00	338+95.86	180 LT
RM8	100.00	339+95.86	108 RT
RM9	100.00	348+44.14	108 LT
RM10	200.00	349+44.14	180 RT

STATE OF TEXAS
NICHOLAS VON SPENCER
93702
LICENSED
PROFESSIONAL ENGINEER

Signature of Registrant & Date, P.E. 5-26-11

Texas Department of Transportation
© 2011

SH 289
PROJECT LAYOUT
WITH ADVANCED WARNING SIGNS

SCALE: 1"= 200' SHEET 2 OF 6

DESIGN	FED. RD. DIV. NO.	STATE PROJECT NO.		HIGHWAY NO.
AMW	6	(SEE TITLE SHEET)		SH 289
GRAPHICS	STATE	DISTRICT	COUNTY	SHEET NO.
AMW	TEXAS	18	COLLIN	4
CHECK	CONTROL	SECTION	JOB	
NVS	0091	04	055	
CHECK NVS				

T:\DALDGN*A\SH 289 Collin\THE PLANS\Project Plan layout\PlanLayout2.dgn
5/26/2011

R-201104-01

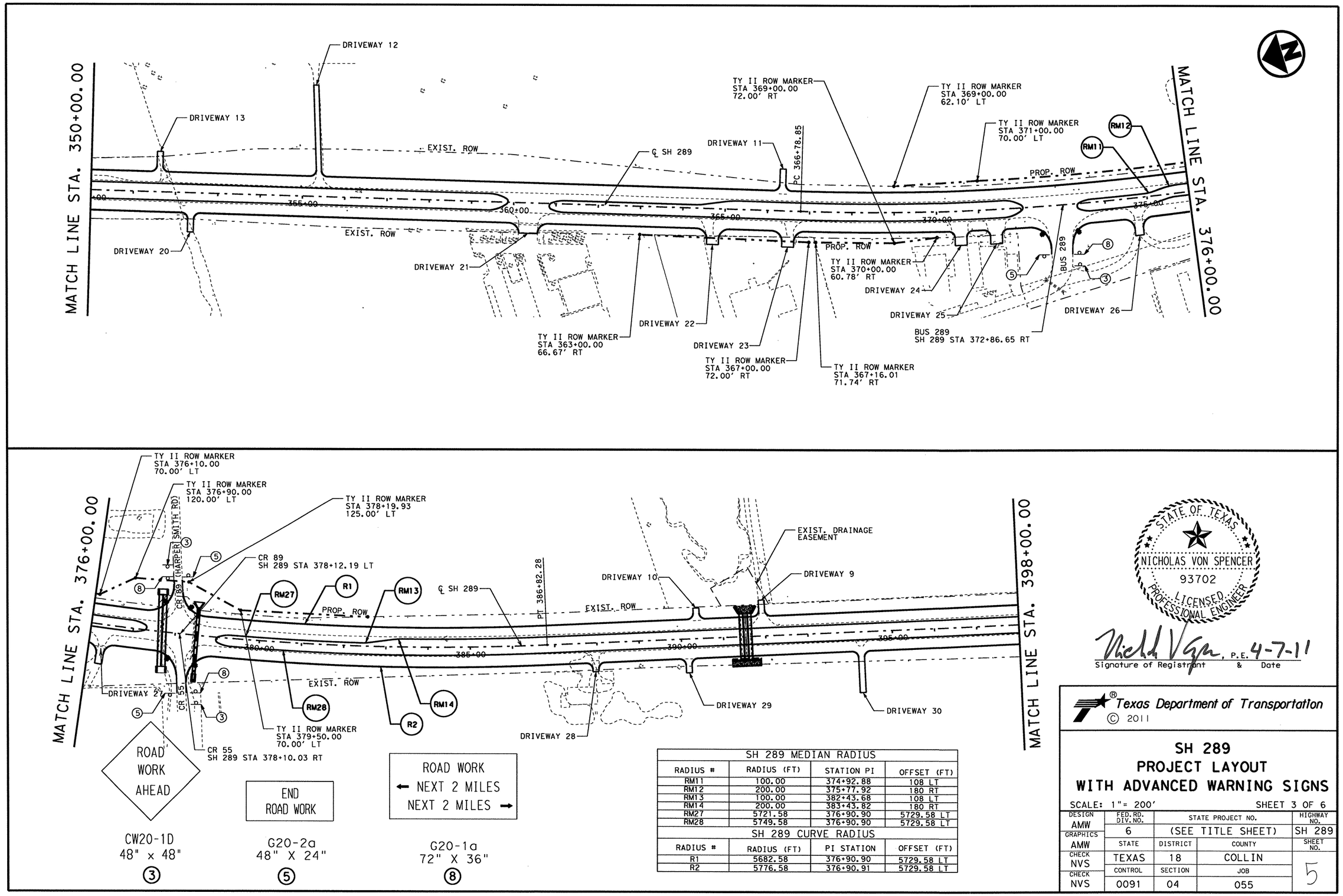

SH 289 MEDIAN RADIUS			
RADIUS #	RADIUS (FT)	STATION PI	OFFSET (FT)
RM11	100.00	374+92.88	108 LT
RM12	200.00	375+77.92	180 RT
RM13	100.00	382+43.68	108 LT
RM14	200.00	383+43.82	180 RT
RM27	5721.58	376+90.90	5729.58 LT
RM28	5749.58	376+90.90	5729.58 LT

SH 289 CURVE RADIUS			
RADIUS #	RADIUS (FT)	PI STATION	OFFSET (FT)
R1	5682.58	376+90.90	5729.58 LT
R2	5776.58	376+90.91	5729.58 LT

STATE OF TEXAS
NICHOLAS VON SPENCER
93702
LICENSED
PROFESSIONAL ENGINEER

Signature of Registrant, P.E. & Date 4-7-11

Texas Department of Transportation
© 2011

SH 289
PROJECT LAYOUT
WITH ADVANCED WARNING SIGNS

SCALE: 1"= 200' SHEET 3 OF 6

DESIGN AMW	FED. RD. DIV. NO.	STATE PROJECT NO.		HIGHWAY NO.
GRAPHICS AMW	6	(SEE TITLE SHEET)		SH 289
	STATE	DISTRICT	COUNTY	SHEET NO.
CHECK NVS	TEXAS	18	COLLIN	5
CHECK NVS	CONTROL	SECTION	JOB	
	0091	04	055	

T:\DALDGN#A\SH 289 Celina\THE PLANS\Project Plan layout\PlanLayout3.dgn

4/7/2011

R-201104-01

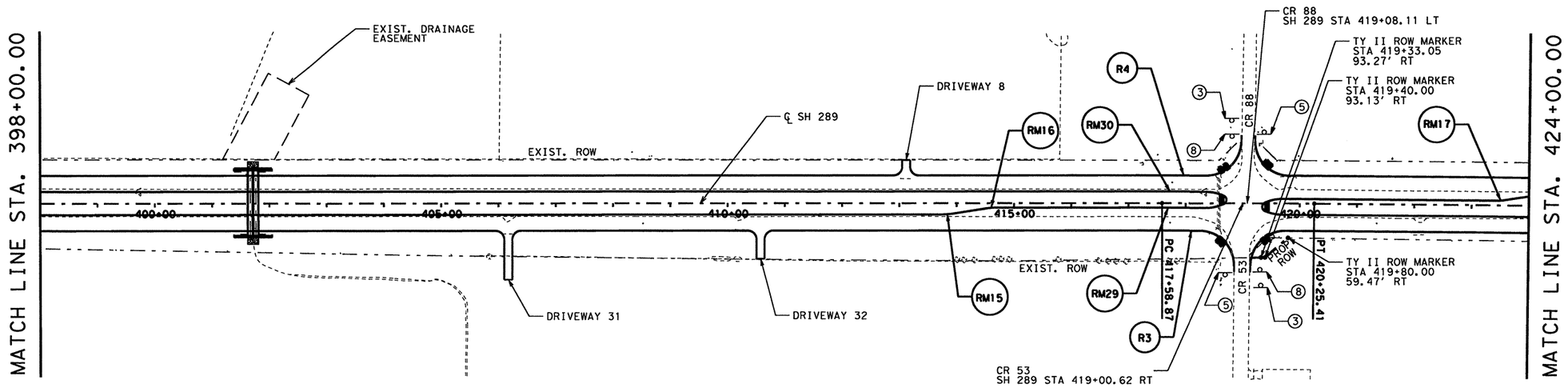

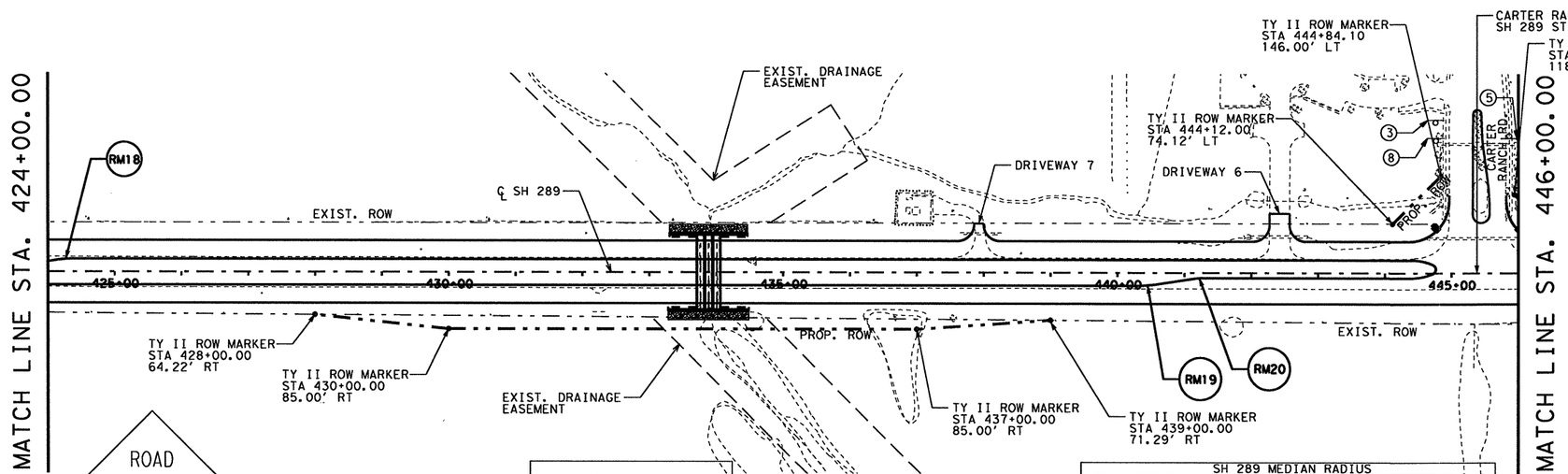

CW20-1D
48" x 48"
③

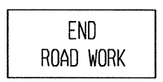

G20-2a
48" X 24"
⑤

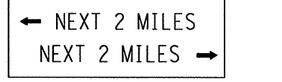

G20-1a
72" X 36"
⑧

SH 289 MEDIAN RADIUS			
RADIUS #	RADIUS (FT)	STATION PI	OFFSET (FT)
RM15	200.00	413+68.23	180 LT
RM16	100.00	414+68.23	108 RT
RM17	100.00	423+42.55	108 LT
RM18	200.00	424+42.55	180 RT
RM19	200.00	440+29.86	180 LT
RM20	100.00	441+29.86	108 RT
RM29	19992.00	418+92.14	20000 RT
RM30	20020.00	418+92.14	20000 RT
SH 289 CURVE RADIUS			
RADIUS #	RADIUS (FT)	STATION PI	OFFSET (FT)
R3	19953.00	418+92.14	20000 RT
R4	20047.00	418+92.15	20000 RT

STATE OF TEXAS
NICHOLAS VON SPENCER
93702
LICENSED
PROFESSIONAL ENGINEER

Nicholas V Spencer, P.E. 4-7-11
Signature of Registrant & Date

Texas Department of Transportation
© 2011

SH 289
PROJECT LAYOUT
WITH ADVANCED WARNING SIGNS

SCALE: 1" = 200'

SHEET 4 OF 6

DESIGN	FED. RD. DIV. NO.	STATE PROJECT NO.		HIGHWAY NO.
AMW	6	(SEE TITLE SHEET)		SH 289
GRAPHICS	STATE	DISTRICT	COUNTY	SHEET NO.
DF	TEXAS	18	COLLIN	6
CHECK	CONTROL	SECTION	JOB	
NVS	0091	04	055	
CHECK				
NVS				

T:\DALDGN*A\SH 289 Celina\THE PLANS\Project Plan layout\PlanLayout4.dgn

4/7/2011

R-201104-01

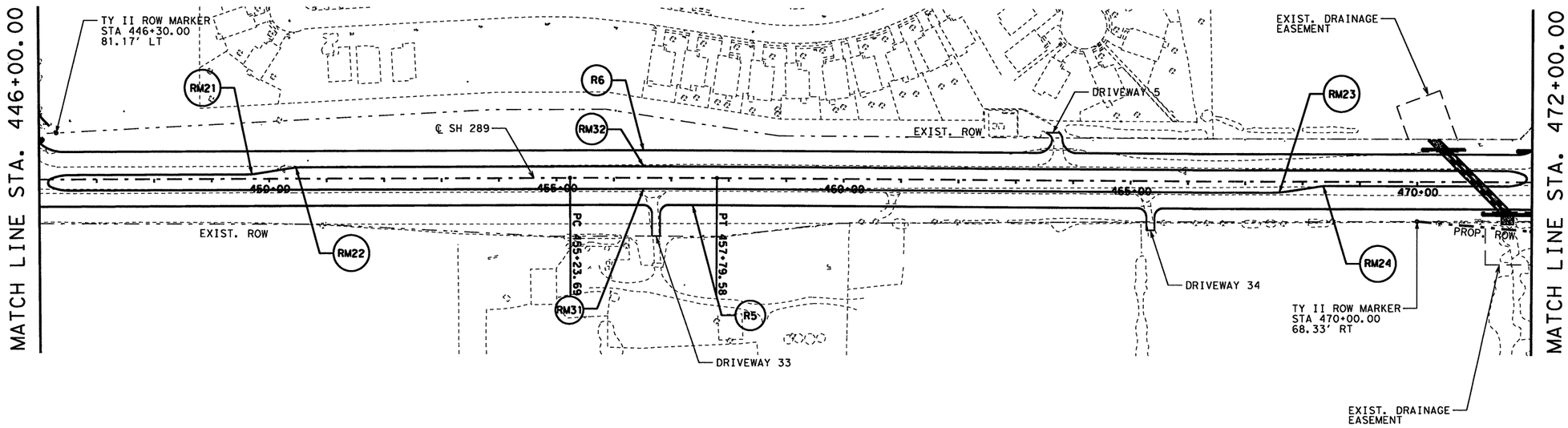

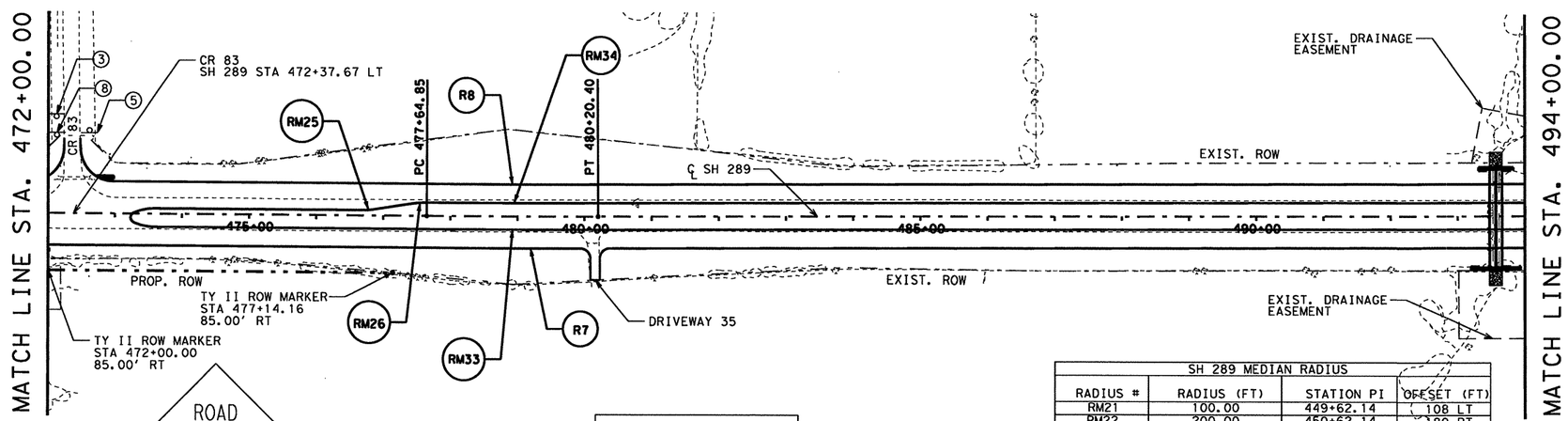

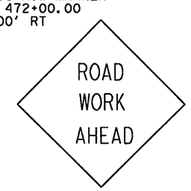

CW20-1D
48" x 48"
③

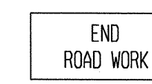

G20-2a
48" X 24"
⑤

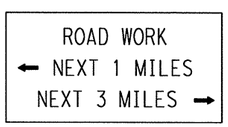

G20-1a
72" X 36"
⑧

SH 289 MEDIAN RADIUS			
RADIUS #	RADIUS (FT)	STATION PI	OFFSET (FT)
RM21	100.00	449+62.14	108 LT
RM22	200.00	450+62.14	180 RT
RM23	200.00	467+43.86	180 LT
RM24	100.00	468+43.86	108 RT
RM25	100.00	476+70.15	108 LT
RM26	200.00	477+70.15	180 RT
RM31	26980.00	456+51.64	27000 RT
RM32	27020.00	456+51.64	27000 RT
RM33	26980.00	478+92.62	27000 LT
RM34	27020.00	478+92.62	27000 LT
SH 289 CURVE RADIUS			
RADIUS #	RADIUS (FT)	STATION PI	OFFSET (FT)
R5	26953.00	456+51.64	27000 RT
R6	27047.00	456+51.65	27000 RT
R7	26953.00	478+92.62	27000 LT
R8	27047.00	478+92.63	27000 LT

STATE OF TEXAS
NICHOLAS VON SPENCER
93702
LICENSED
PROFESSIONAL ENGINEER

Signature of Registrant , P.E. & Date 4-7-11

Texas Department of Transportation
© 2011

SH 289
PROJECT LAYOUT
WITH ADVANCED WARNING SIGNS

SCALE: 1"= 200' SHEET 5 OF 6

DESIGN	FED. RD. DIV. NO.	STATE PROJECT NO.		HIGHWAY NO.
AMW	6	(SEE TITLE SEET)		SH 289
GRAPHICS	STATE	DISTRICT	COUNTY	SHEET NO.
AMW	TEXAS	18	COLLIN	7
CHECK	CONTROL	SECTION	JOB	
NVS	0091	04	055	
CHECK				
NVS				

T:\DALDGN*A\SH 289 Celina\THE PLANS\Project Plan layout\PlanLayout5.dgn

4/7/2011

R-201104-01

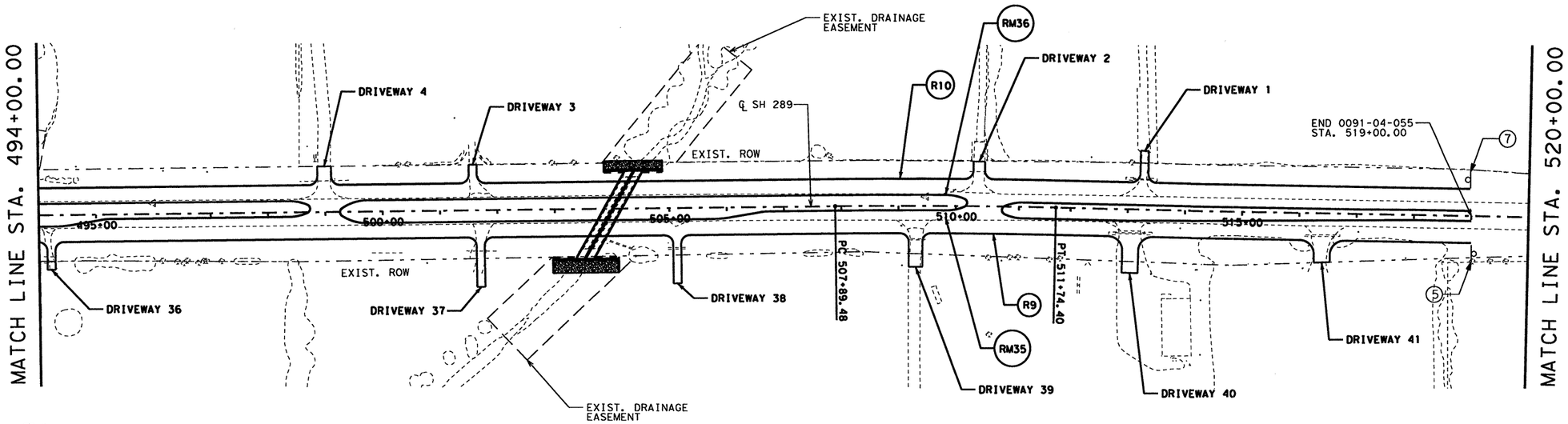

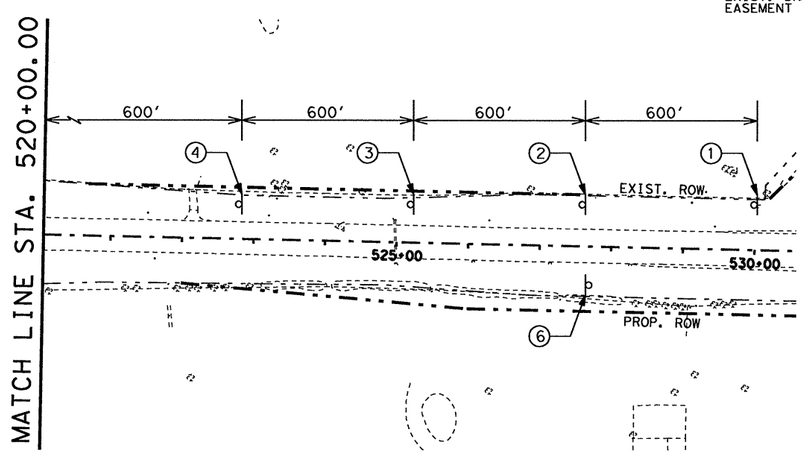

NOTES:

1. COORDINATE ADVANCE WARNING SIGNS WITH ADJACENT CONTRACTORS CONSTRUCTING THE 0091-04-050 AND 0091-03-021 CSJ PROJECTS AS NEEDED.

OBEY WARNING SIGNS STATE LAW
R20-3
48" x 42"
①

BEGIN WORK ZONE
TRAFFIC FINES DOUBLE
WHEN WORKERS ARE PRESENT
G20-9T
24" x 24"
R20-5
24" x 30"
R20-5 PLAQUE
24" x 12"
②

ROAD WORK AHEAD
CW20-1D
48" x 48"
③

NARROW LANES AHEAD
45 M.P.H.
CW20-8
48" X 48"
CW13-1
24" X 24"
④

END ROAD WORK
G20-2a
48" X 24"
⑤

END WORK ZONE
G20-2b
48" X 24"
⑥

BEGIN
ROAD WORK NEXT 4 MILES
NAME
ADDRESS
CITY
STATE
CONTRACTOR
G20-5T
48" x 24"
G20-6
48" x 30"
⑦

SH 289 MEDIAN RADIUS			
RADIUS #	RADIUS (FT)	STATION PI	OFFSET (FT)
RM35	11439.16	509+81.96	11459.16 RT
RM36	11479.16	509+81.96	11459.16 RT
SH 289 CURVE RADIUS			
RADIUS #	RADIUS (FT)	STATION PI	OFFSET (FT)
R9	11412.16	509+81.96	11459.16 RT
R10	11506.16	509+81.97	11459.16 RT

STATE OF TEXAS
NICHOLAS VON SPENCER
93702
LICENSED PROFESSIONAL ENGINEER

Nicholas V Spencer, P.E. 4-7-11
Signature of Registrant & Date

Texas Department of Transportation
© 2011

SH 289
PROJECT LAYOUT
WITH ADVANCED WARNING SIGNS

SCALE: 1"= 200' SHEET 6 OF 6

DESIGN	FED. RD. DIV. NO.	STATE PROJECT NO.		HIGHWAY NO.
AMW	6	(SEE TITLE SHEET)		SH 289
GRAPHICS	STATE	DISTRICT	COUNTY	SHEET NO.
AMW	TEXAS	18	COLLIN	8
CHECK	CONTROL	SECTION	JOB	
NVS	0091	04	055	
CHECK NVS				

T:\DALDGN*\ASH 289 Celina\THE PLANS\Project Plan layout\PlanLayout6.dgn
4/7/2011

R-201104-01

4/7/2011 3:16:18 PM

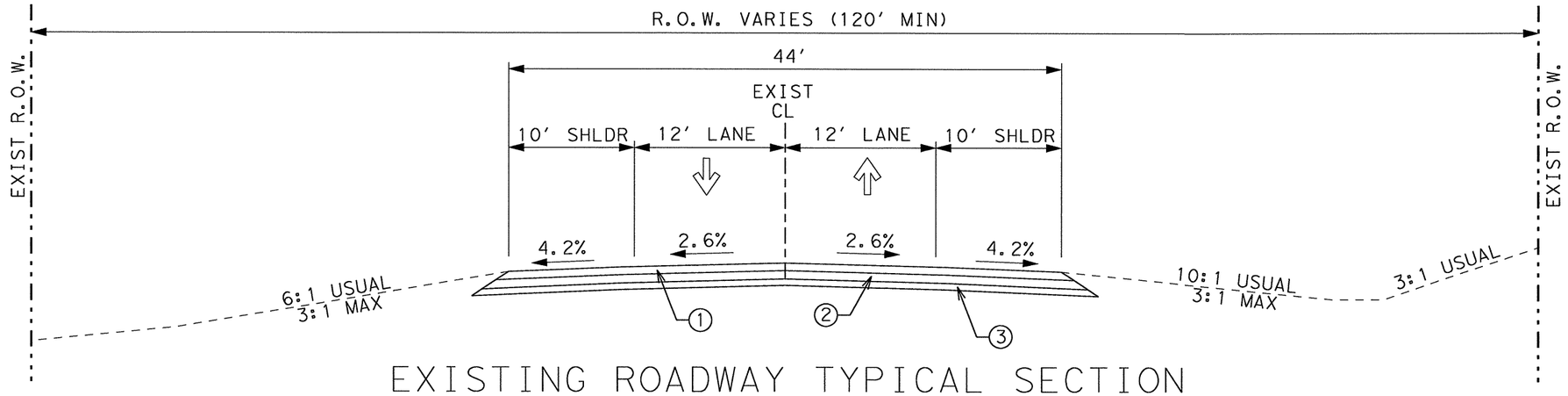

EXISTING ROADWAY TYPICAL SECTION

STA 312+50.00 TO STA 368+43.00
STA 385+85.00 TO STA 519+00.00

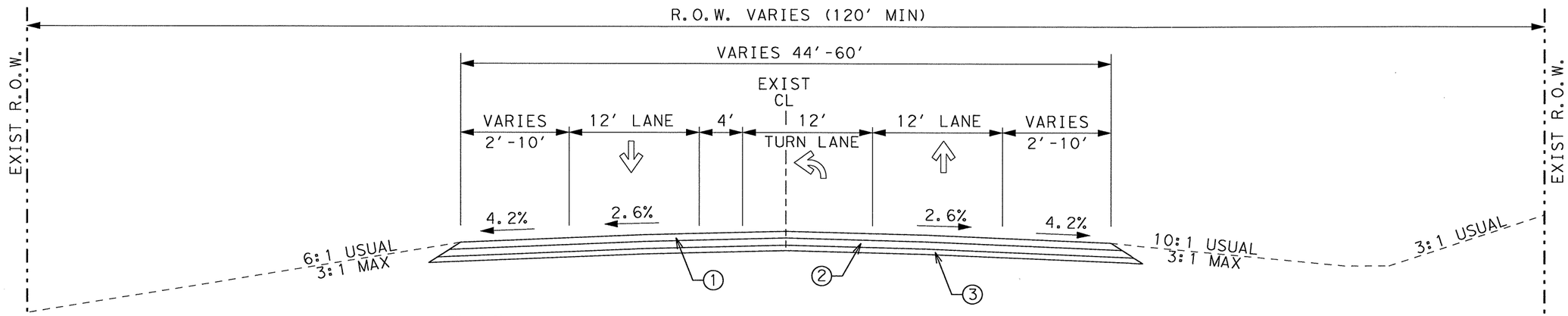

EXISTING ROADWAY TYPICAL SECTION

STA 303+05.00 TO STA 312+50.00
STA 368+43.00 TO STA 385+85.00

LEGEND

1. APPROX. 7-12" ~ 160# ACP/SY TWO COURSE SURFACE TREATMENT (HMAC)
2. APPROX 7.5" ~ 181 CLASS 1.0 CEMENT TREATED BASE
3. APPROX 6" ~ LIME TREATED SUBGRADE (4%)

SEE EXISTING SOIL BORING DATA SHEETS FOR MORE DETAILS OF EXISTING PAVEMENT DEPTHS.

STATE OF TEXAS
NICHOLAS VON SPENCER
93702
LICENSED PROFESSIONAL ENGINEER

Signature of Registrant, P.E. & Date 4-7-11

Texas Department of Transportation
© 2011

SH 289 TYPICAL SECTIONS

SCALE: 1"=10'

SHEET 1 OF 8

DESIGN	FED. RD. DIV. NO.	STATE PROJECT NO.		HIGHWAY NO.
AMW	6	(SEE TITLE SHEET)		SH 289
GRAPHICS AMW	STATE	DISTRICT	COUNTY	SHEET NO.
CHECK NVS	TEXAS	DALLAS	COLLIN	9
CHECK NVS	CONTROL	SECTION	JOB	
	0091	04	055	

T:\DALDGN#A\SH 289 Celina\THE PLANS\Typical Sections\ProjectTyps.dgn

4/7/2011 3:16:25 PM

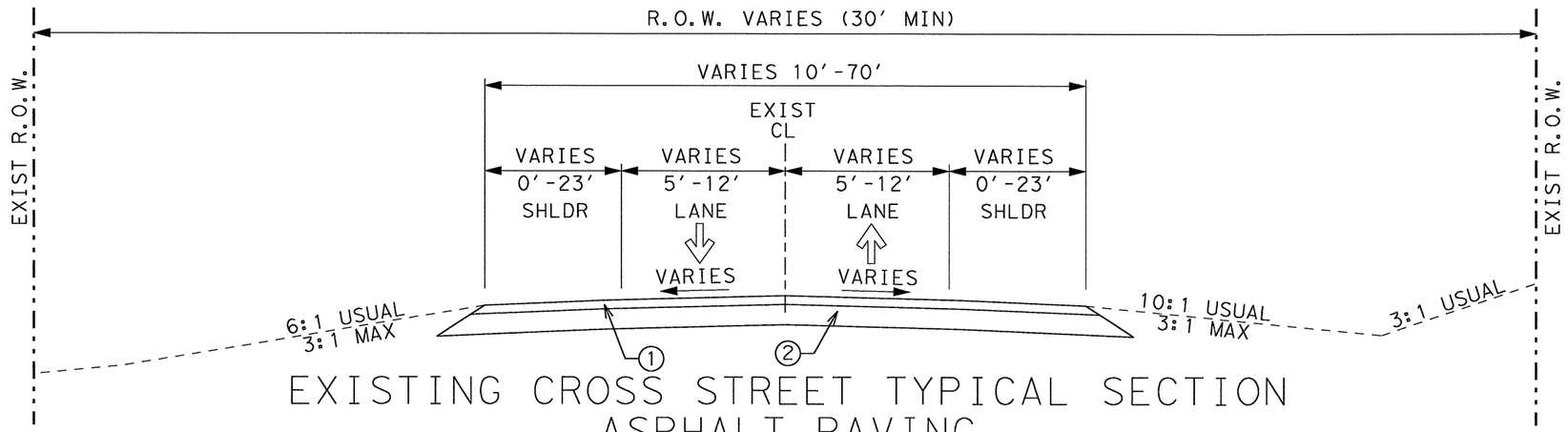

EXISTING CROSS STREET TYPICAL SECTION ASPHALT PAVING

FM 455	ASH ST.
ELM ST.	CR 91
BUS 289	CR 55
CR 83	CR 53
	CR 88

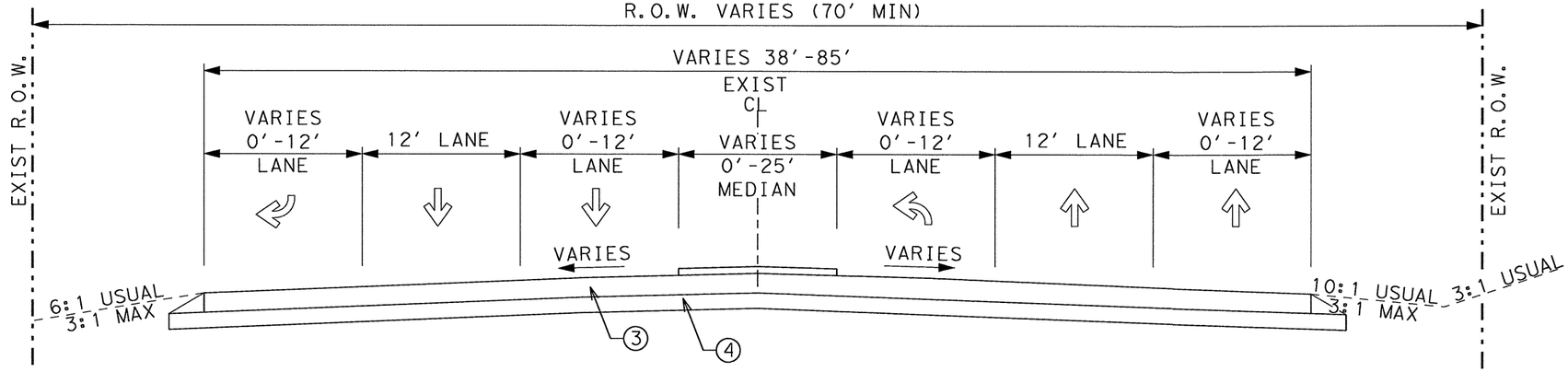

EXISTING CROSS STREET TYPICAL SECTION CONCRETE PAVING w/ MEDIAN

CARTER RANCH RD.

LEGEND

1. APPROX. 8" ~ FND. CRSE. STAB. WITH 2.5% LIME
2. APPROX. 6" ~ LIME TREATED SUBGRADE (4%)
3. APPROX. 8" ~ CONCRETE (PER ASBUILT)
4. APPROX. 6" ~ LIME TREATED SUBGRADE (4%) (PER ASBUILT)

SEE EXISTING SOIL BORING DATA SHEETS FOR MORE DETAILS OF EXISTING PAVEMENT DEPTHS.

STATE OF TEXAS
NICHOLAS VON SPENCER
93702
LICENSED PROFESSIONAL ENGINEER

Nicholas Von Spencer, P.E. 4-7-11
Signature of Registrant & Date

Texas Department of Transportation
© 2011

SH 289 TYPICAL SECTIONS

SCALE: 1"=10' SHEET 2 OF 8

DESIGN	FED. RD. DIV. NO.	STATE PROJECT NO.		HIGHWAY NO.
AMW	6	(SEE TITLE SHEET)		SH 289
GRAPHICS AMW	STATE	DISTRICT	COUNTY	SHEET NO.
CHECK NVS	TEXAS	DALLAS	COLLIN	10
CHECK NVS	CONTROL 0091	SECTION 04	JOB 055	

T:\DALDGN*A\SH 289 Celina\THE PLANS\Typical Sections\ProjectTyps.dgn

4/7/2011 3:16:29 PM
T:\DALDGN*A\SH 289 Celina\THE PLANS\Typical Sections\ProjectTyps.dgn

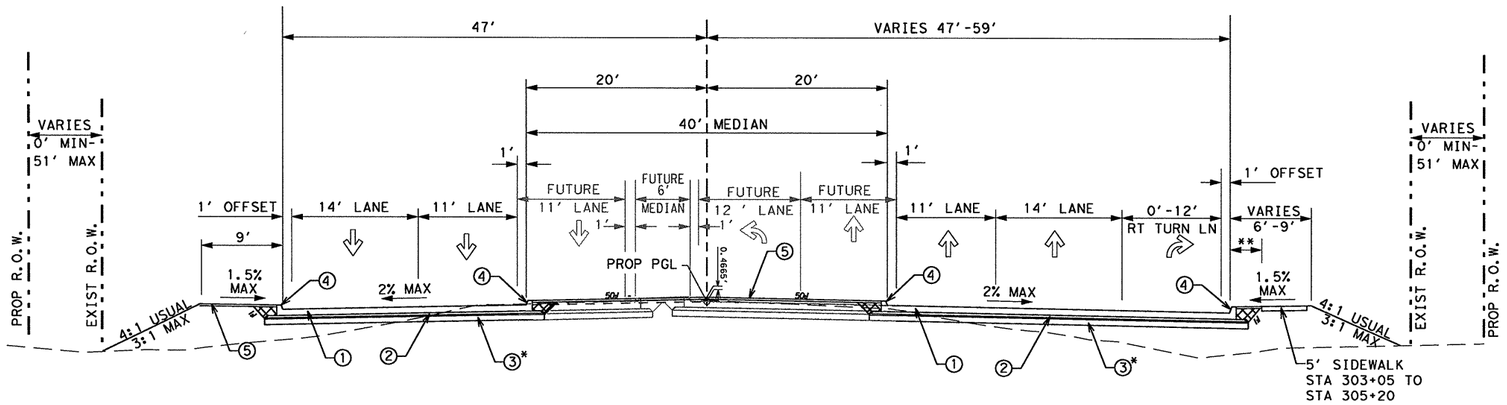

PROPOSED ROADWAY TYPICAL SECTION
4 LANE URBAN (FUTURE 6 LANE URBAN)

STA 303+05.00 TO STA 513+00.00

LEGEND

① 8.0" ~ CONTINUOUS REINFORCED CONCRETE PAVEMENT (CRCP)
② 4.0" ~ TYPE "B" ACP (PG BINDER 64-22)
③ 8.0" ~ LIME TREATED SUBGRADE (5%)
④ TY II MONO CURB
⑤ 4" TOPSOIL/DRILL SEEDING (PERM)

⊠ EMBANKMENT (TY C)

* STA 338+00 TO STA 440+00 ~ 8.0" FLEXIBLE BASE (TY D GRADE 1)
USE 0.20 GAL/SY MC-30 PRIME COAT FOR PRIMING.

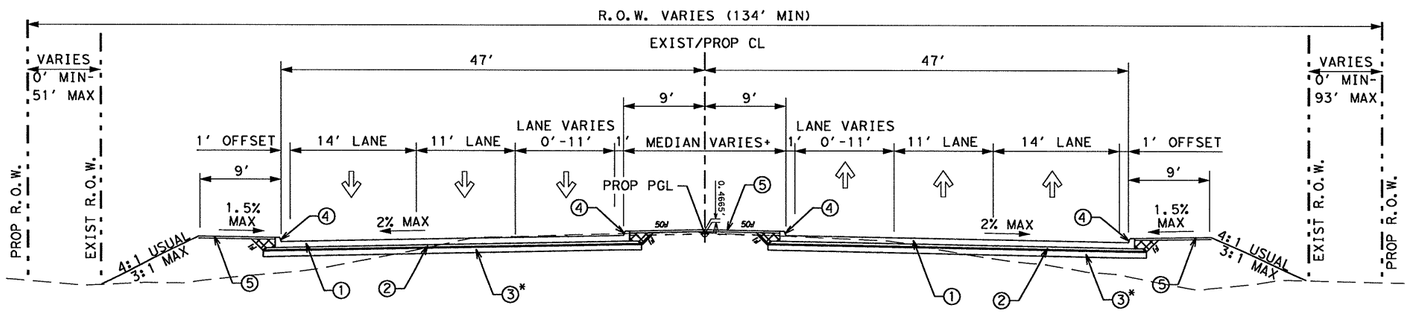

PROPOSED ROADWAY TYPICAL SECTION
4 LANE URBAN TO 6 LANE URBAN TRANSITION

STA 513+00.00 TO STA 519+00.00

+ MEDIAN WIDTH VARIES FROM 40' AT STA 513+00.00
TO 18' AT STA 519+00.00 TO MATCH CONSTRUCTION
OF CSJ: 0091-04-050

STATE OF TEXAS
NICHOLAS VON SPENCER
93702
LICENSED
PROFESSIONAL ENGINEER

Nicholas V Spencer, P.E. 4-7-11
Signature of Registrant & Date

Texas Department of Transportation
© 2011

SH 289 PROPOSED TYPICAL SECTIONS

SCALE: NTS — SHEET 3 OF 8

DESIGN	FED. RD. DIV. NO.	STATE PROJECT NO.		HIGHWAY NO.
AMW	6	(SEE TITLE SHEET)		SH 289
GRAPHICS NVS	STATE	DISTRICT	COUNTY	SHEET NO.
CHECK NVS	TEXAS	DALLAS	COLLIN	11
CHECK NVS	CONTROL 0091	SECTION 04	JOB 055	

4/7/2011 3:16:32 PM

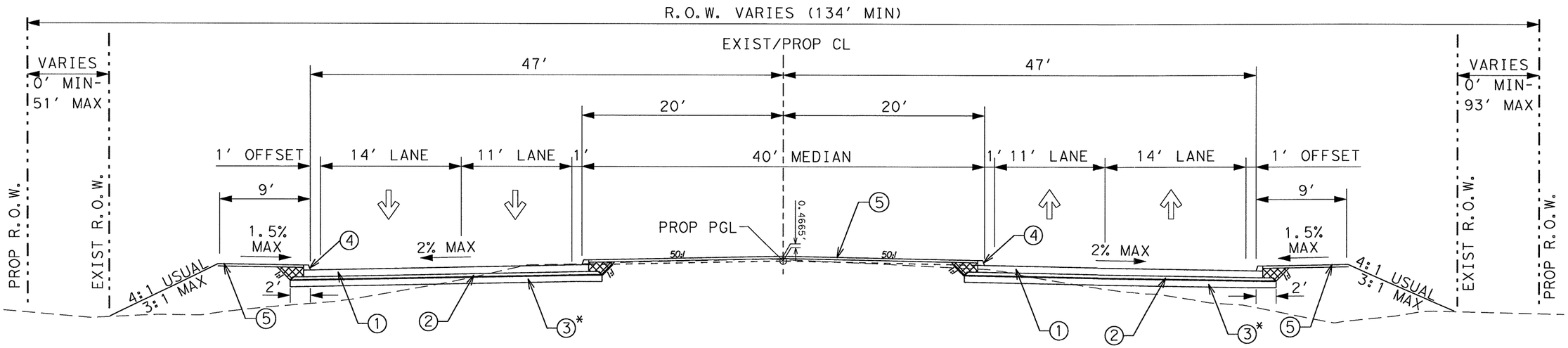

PROPOSED ROADWAY TYPICAL SECTION
4 LANE URBAN

STA 312+29.14 TO STA 320+07.86
STA 330+47.14 TO STA 338+95.86
STA 349+44.14 TO STA 359+86.64
STA 365+30.94 TO STA 372+05.15

STA 383+43.82 TO STA 413+68.23
STA 424+42.55 TO STA 440+29.86
STA 450+62.14 TO STA 467+43.86
STA 477+70.15 TO STA 494+26.68
STA 499+25.33 TO STA 513+00.00

LEGEND

① 8.0" ~ CONTINUOUS REINFORCED CONCRETE PAVEMENT (CRCP)
② 4.0" ~ TYPE "B" ACP (PG BINDER 64-22)
③ 8.0" ~ LIME TREATED SUBGRADE (5%)
④ TY II MONO CURB
⑤ 4" TOPSOIL/DRILL SEEDING (PERM)
⊠ EMBANKMENT (TY C)

* STA 338+00 TO STA 440+00 ~ 8.0" FLEXIBLE BASE (TY D GRADE 1)
USE 0.20 GAL/SY MC-30 PRIME COAT FOR PRIMING.

STATE OF TEXAS
NICHOLAS VON SPENCER
93702
LICENSED
PROFESSIONAL ENGINEER

Nicholas V Spencer, P.E. 4-7-11
Signature of Registrant & Date

Texas Department of Transportation
© 2011

SH 289
TYPICAL SECTIONS

SCALE: 1"=10' SHEET 4 OF 8

DESIGN	FED. RD. DIV. NO.	STATE PROJECT NO.		HIGHWAY NO.
AMW	6	(SEE TITLE SHEET)		SH 289
GRAPHICS AMW	STATE	DISTRICT	COUNTY	SHEET NO.
CHECK NVS	TEXAS	DALLAS	COLLIN	12
CHECK NVS	CONTROL	SECTION	JOB	
	0091	04	055	

T:\DALDGN*A\SH 289 Collna\THE PLANS\Typical Sections\ProjectTyps.dgn

4/7/2011 3:16:37 PM

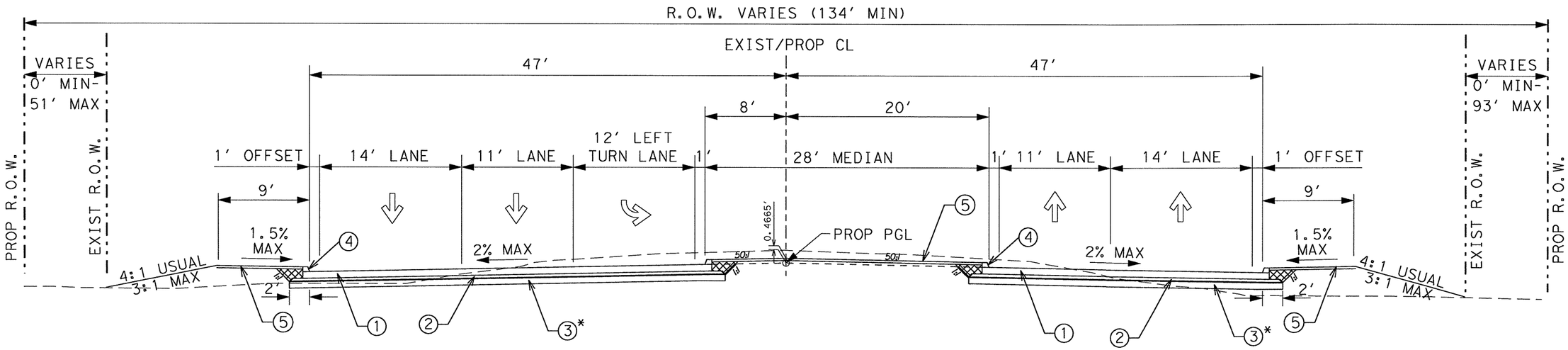

PROPOSED ROADWAY TYPICAL SECTION
4 LANE URBAN WITH LEFT TURN LANE

STA 309+84.88 TO STA 312+29.14
STA 326+00.00 TO STA 330+47.14
STA 344+97.00 TO STA 349+44.14
STA 360+83.80 TO STA 365+30.94
STA 373+33.10 TO STA 375+32.45
STA 378+96.59 TO STA 383+43.82
STA 419+95.40 TO STA 424+42.55
STA 446+15.00 TO STA 450+62.14
STA 473+23.00 TO STA 477+70.15

STATE OF TEXAS
NICHOLAS VON SPENCER
93702
LICENSED
PROFESSIONAL ENGINEER

Nicholas V Spencer, P.E. 4-7-11
Signature of Registrant & Date

LEGEND

① 8.0" ~ CONTINUOUS REINFORCED CONCRETE PAVEMENT (CRCP)
② 4.0" ~ TYPE "B" ACP (PG BINDER 64-22)
③ 8.0" ~ LIME TREATED SUBGRADE (5%)
④ TY II MONO CURB
⑤ 4" TOPSOIL/DRILL SEEDING (PERM)
⑥ 0.20 GAL/SY MC-30 PRIME COAT
⊠ EMBANKMENT (TY C)
* STA 338+00 TO STA 440+00 ~ 8.0" FLEXIBLE BASE (TY D GRADE 1)
USE 0.20 GAL/SY MC-30 PRIME COAT FOR PRIMING.

Texas Department of Transportation
© 2011

SH 289
TYPICAL SECTIONS

SCALE: 1"=10'
SHEET 5 OF 8

DESIGN	FED. RD. DIV. NO.	STATE PROJECT NO.		HIGHWAY NO.
AMW	6	(SEE TITLE SHEET)		SH 289
GRAPHICS	STATE	DISTRICT	COUNTY	SHEET NO.
AMW	TEXAS	DALLAS	COLLIN	13
CHECK	CONTROL	SECTION	JOB	
NVS	0091	04	055	
CHECK NVS				

T:\DALDGN\#A\SH 289 Celina\THE PLANS\Typical Sections\ProjectTyps.dgn

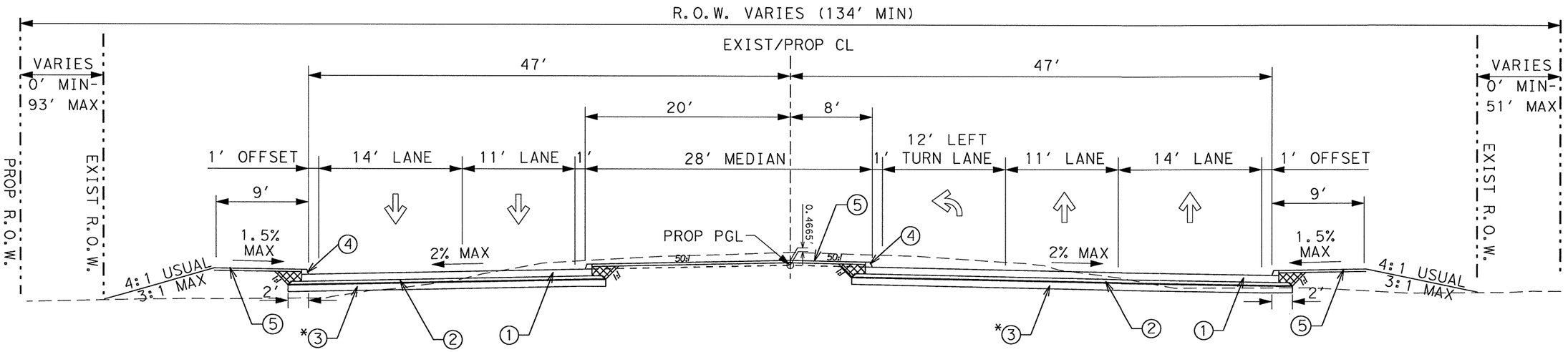

PROPOSED ROADWAY TYPICAL SECTION
4 LANE URBAN WITH LEFT TURN LANE

STA 320+07.86 TO STA 324+55.00
STA 338+95.86 TO STA 343+42.99
STA 375+32.45 TO STA 377+31.47

STA 413+68.23 TO STA 418+15.36
STA 440+29.86 TO STA 444+77.00
STA 467+43.86 TO STA 471+91.00
STA 494+26.68 TO STA 498+73.82

STATE OF TEXAS
NICHOLAS VON SPENCER
93702
LICENSED
PROFESSIONAL ENGINEER

Nicholas Von Spencer, P.E. 4-7-11
Signature of Registrant & Date

LEGEND

① 8.0" ~ CONTINUOUS REINFORCED CONCRETE PAVEMENT (CRCP)
② 4.0" ~ TYPE "B" ACP (PG BINDER 64-22)
③ 8.0" ~ LIME TREATED SUBGRADE (5%)
④ TY II MONO CURB
⑤ 4" TOPSOIL/DRILL SEEDING (PERM)
⊠ EMBANKMENT (TY C)

* STA 338+00 TO STA 440+00 ~ 8.0" FLEXIBLE BASE (TY D GRADE 1)
USE 0.20 GAL/SY MC-30 PRIME COAT FOR PRIMING.

Texas Department of Transportation
© 2011

SH 289
TYPICAL SECTIONS

SCALE: 1"=10'
SHEET 6 OF 8

DESIGN	FED. RD. DIV. NO.	STATE PROJECT NO.		HIGHWAY NO.
AMW	6	(SEE TITLE SHEET)		SH 289
GRAPHICS AMW	STATE	DISTRICT	COUNTY	SHEET NO.
CHECK NVS	TEXAS	DALLAS	COLLIN	14
CHECK NVS	CONTROL	SECTION	JOB	
	0091	04	055	

T:\DALDGN*A\SH 289 Celina\THE PLANS\Typical Sections\ProjectTyps.dgn
4/7/2011 3:16:40 PM

4/7/2011 3:16:43 PM

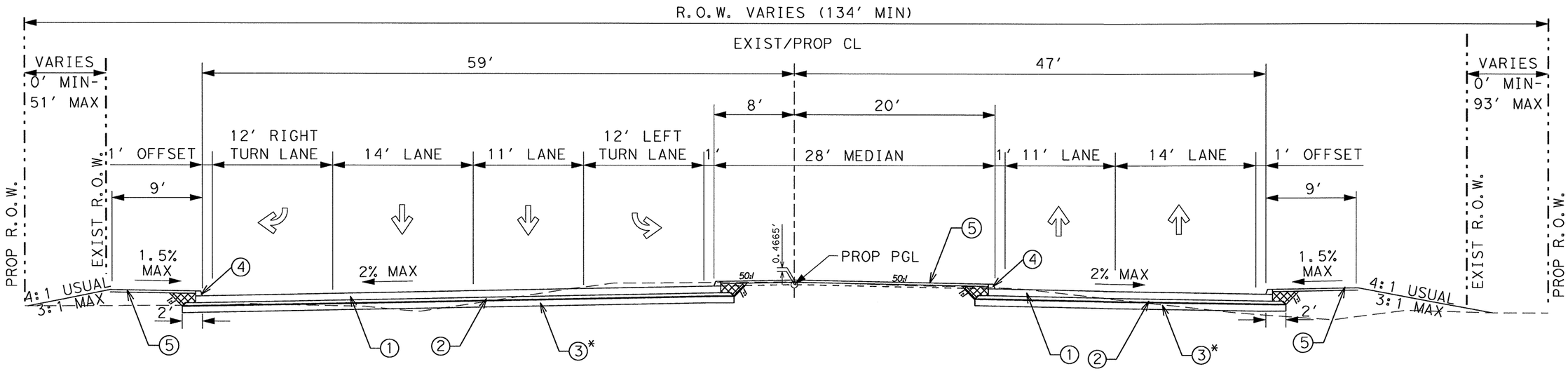

PROPOSED ROADWAY TYPICAL SECTION
4 LANE URBAN WITH LEFT AND RIGHT TURN LANES

STA 306+02.67 TO STA 309+84.88

LEGEND

① 8.0" ~ CONTINUOUS REINFORCED CONCRETE PAVEMENT (CRCP)
② 4.0" ~ TYPE "B" ACP (PG BINDER 64-22)
③ 8.0" ~ LIME TREATED SUBGRADE (5%)
④ TY II MONO CURB
⑤ 4" TOPSOIL/DRILL SEEDING (PERM)
⊠ EMBANKMENT (TY C)

* STA 338+00 TO STA 440+00 ~ 8.0" FLEXIBLE BASE (TY D GRADE 1)
USE 0.20 GAL/SY MC-30 PRIME COAT FOR PRIMING.

STATE OF TEXAS
NICHOLAS VON SPENCER
93702
LICENSED
PROFESSIONAL ENGINEER

Signature of Registrant, P.E. & Date 4-7-11

Texas Department of Transportation
© 2011

SH 289
TYPICAL SECTIONS

SCALE: 1"=10' SHEET 7 OF 8

DESIGN	FED.RD. DIV.NO.	STATE PROJECT NO.		HIGHWAY NO.
AMW	6	(SEE TITLE SHEET)		SH 289
GRAPHICS AMW	STATE	DISTRICT	COUNTY	SHEET NO.
CHECK NVS	TEXAS	DALLAS	COLLIN	15
CHECK NVS	CONTROL 0091	SECTION 04	JOB 055	

T:\DALDGN*A\SH 289 Celina\THE PLANS\Typical Sections\ProjectTyps.dgn

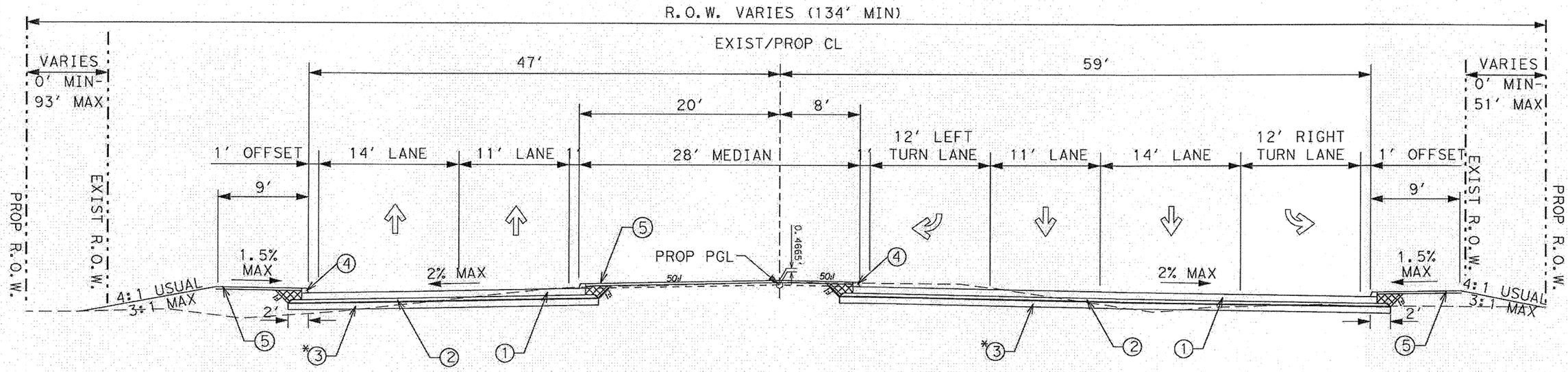

PROPOSED ROADWAY TYPICAL SECTION
4 LANE URBAN WITH LEFT AND RIGHT TURN LANES

STA 303+05.00 TO STA 304+22.33

LEGEND

① 8.0" ~ CONTINUOUS REINFORCED CONCRETE PAVEMENT (CRCP)
② 4.0" ~ TYPE "B" ACP (PG BINDER 64-22)
③ 8.0" ~ LIME TREATED SUBGRADE (5%)
④ TY II MONO CURB
⑤ 4" TOPSOIL/DRILL SEEDING (PERM)
⊠ EMBANKMENT (TY C)

*STA 338+00 TO STA 440+00 ~ 8.0" FLEXIBLE BASE (TY D GRADE 1)USE 0.20 GAL/SY MC-30 PRIME COAT FOR PRIMING.

SIDE STREET NOTES:

1. SEE INTERSECTION DETAIL SHEETS FOR LOCATION AND LIMITS.

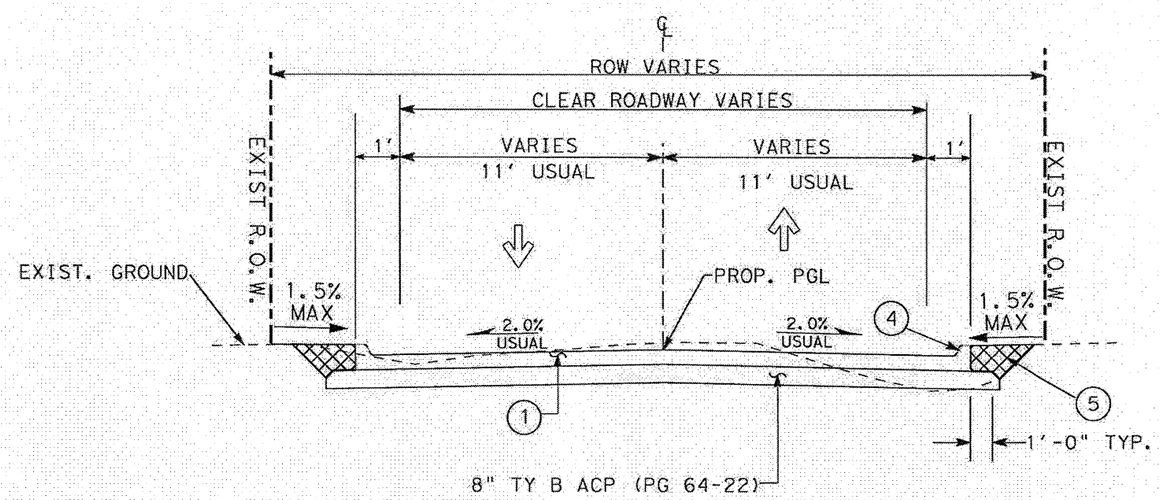

PROPOSED ROADWAY TYPICAL SECTION
SIDE STREETS

SEE INTERSECTION DETAILS FOR LOCATION

3 Replaced 7/6/11 JB

STATE OF TEXAS
NICHOLAS VON SPENCER
93702
LICENSED PROFESSIONAL ENGINEER

Signature of Registrant & Date, P.E. 7-6-11

Texas Department of Transportation
© 2011

SH 289
TYPICAL SECTIONS

SCALE: 1"=10' SHEET 8 OF 8

DESIGN	FED. RD. DIV. NO.	STATE PROJECT NO.		HIGHWAY NO.
AMW	6	(SEE TITLE SHEET)		SH 289
GRAPHICS AMW	STATE	DISTRICT	COUNTY	SHEET NO.
CHECK NVS	TEXAS	DALLAS	COLLIN	16
	CONTROL	SECTION	JOB	
CHECK NVS	0091	04	055	

7/6/2011 4:25:01 PM

T:\DALDGN\A\SH 289 Celina\THE PLANS\Typical Sections\ProjectTyps.dgn

R-201104-01

GENERAL NOTES

SW3P RESPONSIBILITIES

TxDOT Area of Responsibility

Responsible for the area defined by the limits of the subject project, except for those areas utilized and operated by the contractor. These areas include, though are not limited to, areas used for field offices, equipment and/or material storage, and concrete or asphalt plants.

TxDOT Operational Responsibility

Responsible for seeking coverage under the TPDES Construction General Permit (CGP) and operating the project within the requirements of the CGP for discharging storm water from the subject project and to notify MS4 permit holders of the intent to discharge storm water.

File a Notice of Termination with TCEQ upon completion of the project when the exposed areas have been stabilized with a vegetative cover of at least 70%.

Contractor Area of Responsibility

Responsible for all areas under their direct operational control which includes, though not limited to, areas used for field offices, equipment and/or material storage, and concrete or asphalt plants. These areas may be located on or off the subject project's R.O.W.

Contractor Operational Responsibility

Responsible for seeking coverage under the TPDES Construction General Permit (CGP) and adhering to all requirements of the permit for discharging storm water from the areas under their operational control. Perform regular inspections, prepare a written report of deficiencies, and repair deficiencies within the time frame set forth by the permit. File a Notice of Termination with TCEQ upon completion of the project when the exposed areas have been stabilized with a vegetative cover of at least 70%.

Responsible under contractual obligations to TxDOT to install, clean, repair, replace or remove sediment and erosion control devices as indicated on TxDOT's Inspection Reports, or as required by daily construction practices, within the time frame set forth by the permit.

Project Number: C 91-4-55 SHEET 17
County: Collin Control: 0091-04-055
Highway: SH 289

SPECIFICATION DATA

Table 1: Soil Constants Requirements

Item	Description	Plasticity Index		Note
		Max	Min	
132	Embk(Dens Cont) (Type C)	40	8	1

Note 1: Material excavated from the project must meet the PI requirements when used in the top 10 feet of embankment that supports the pavement structure or other locations shown in the plans. Do not use shale and obtain approval to incorporate shaley clay produced by the construction project.

Table 2: Basis of Estimate for Permanent Construction

Item	Description	Thickness	Rate		Quantity	
162	Block Sod	4"	N/A		515	SY
164	Drill Seed (Perm) (U) (C)	N/A	SEE SPEC		223184	SY
166 *	Fertilizer (12-6-6)	N/A	500	Lb/Ac	11.57	Ton
168	Vegetative Watering	N/A	140	Mg/Ac	12928	Mg
204 *	Sprinkling (dust cont)	N/A	1	Mg/Sta	6493	Mg
247	Flexible Base	8"	N/A		17728.38	CY
260	Hydrated Lime (slurry)	8"	N/A	5% by wt	834.99	Ton
310	Prime Coat (MC-30)	N/A	0.20	Gal/SY	14722.27	Gal
340	Hot Mix Asphalt (Ty B) (PG 64-22)	4"	110	Lb/(SY*In)	42145.72	Ton

* For contractor's information only

Note: (1) Base material weight based on 1.50 Ton/CY (dry- compacted)
(2) Asphalt weight based on 110 (Lb/SY*In)
(3) Subgrade weight based on 1.50 Ton/CY (dry- compacted)

Table 3: Basis of Estimate for Temporary Erosion Control Items					
Item	Description	Rate		Quantity	
164	Drill Seeding (Temp) (Warm or Cool)	See Spec		223184	SY
166*	Fertilizer (12-6-6)	500	Lb/Ac	11.57	Ton
168	Vegetative Watering	140	Mg/Ac	12928	Mg
*For contractor's information only					

GENERAL

Access will be provided to all business and residences at all times. Materials, labor and maintenance for these temporary accesses will not be paid for directly but will be considered subsidiary to the various bid items.

The construction, operation and maintenance of the proposed project will be consistent with the state implementation plan as prepared by the Texas Commission on Environmental Quality.

The disturbed area for this project, as shown on the plans is 83.6 acres. However, the Total Disturbed Area (TDA) will establish the required authorization for storm water discharges. The TDA of this project will be determined by the sum of the disturbed area in all project locations in the contract, and all disturbed area on all Project-Specific Locations (PSL) located in the project limits and/or within 1 mile of the project limits. The department will obtain an authorization to discharge storm water from the Texas Commission on Environmental Quality (TCEQ) for the construction site as shown on the plans, according to the TDA of the project. The contractor will obtain any required authorization from the TCEQ for the discharge of storm water from any PSL for construction support activities on or off of the project row according to the TDA of the project. When the TDA for the project exceeds 1 acre, provide a copy of the appropriate application of permit (NOI, or Construction Site Notice) to the engineer, for any PSL located in the project limits or within 1 mile of the project limits. Follow the directives and adhere to all requirements set forth in the TCEQ, Texas Pollution Discharge Elimination System, Construction General Permit (TPDES, CGP).

This project required formal consultation with environmental resources agencies. There is a high probability that an environmentally sensitive area could be encountered on the contractor designated Project-Specific Locations (PSL) for this project (haul roads, equipment staging areas, borrow pits, disposal sites, field offices, storage areas, parking areas, etc.). Item 7.19.F, "Project-Specific Locations", will provide a listing of regulatory agencies that may need to be contacted regarding this project.

Prior to contract letting, bidders may request electronic earthwork information by email.
Email: John.Hudspeth@txdot.gov
Or Barry.Heard@txdot.gov

Earthwork files will be provided by email or by using TxDOT's Dropbox FTP Service.

Bidders may also obtain a free computer diskette that contains earthwork information from the engineer's office. Paper copies of cross-sections may be produced by using the provided free diskette at the bidders' expense and at copying companies. This data is for non-construction purposes only and it is the responsibility of the prospective bidder to validate the enclosed data with appropriate plans, specifications and estimate for the project(s).

Leave all right of way areas undisturbed until actual construction is to be performed in said areas.

Place survey monuments, provided by the department, at points indicated and as detailed in the plans or as directed. Furnish surface coordinates and the elevation of the set monument and an azimuth from the monument to some prominent physical feature, preferably another survey monument on the project. This work will not be paid for directly, but will be considered subsidiary to the various bid items.

Use established industry and utility safety practices to erect poles, luminaries, signs or structures near any overhead or underground utility. Consult with the appropriate utility company prior to beginning such work.

Locate all utilities, both underground and above ground, in the project area prior to beginning work so that conflicts are avoided.

The Contractor is liable for all damages incurred to the above mentioned utilities when working without having the utilities located prior to excavation.

For the project to be deemed complete, permanently stabilize all unpaved disturbed areas of the project with a vegetative cover at a minimum of 70% density for the control of erosion.

Submit all shop drawings, working drawings, or other documents which require review sufficiently in advance of scheduled construction to allow no less than thirty (30) calendar days for review and response.

Portable stop signs will be used during transition period from temporary signal to permanent signal while the controller cabinet is being rewired.

Meet weekly with the engineer to notify him or her of planned work for the upcoming week.

Provide the engineer with a daily work schedule of planned work.

Submit pre-letting questions, by email only with subject line "SH 289 Question (CSJ: 0091-04-055)", to the attention of Area Engineer or Area Engineer's representative.
Email: John.Hudspeth@txdot.gov
or Barry.Heard@txdot.gov
Time permitting, answers will be provided by email.

An electronic file containing pre-letting questions and TxDOT answers will be provided upon email request.

Material On Hand (MOH) will not be used in calculating partial payments for Mobilization.

Provide the Engineer with a copy of all DBE subcontractor agreements prior to commencing work.

The following standard detail sheets have been modified:

CCCG-10A (MOD)
CI (TY I) - 08 (MOD)
DROP INLET TYPE C & G DETAILS - District Standard
SW3P - District Standard
EPIC – Dallas District Standard
Erosion Control Logs - District Standard
Vegetation Establishment Sheet - District Standard
Construction Details for Span Wire Mounted Traffic Signals - District Standard
Traffic Signal Head Identification - District Standard
Pedestrian Signal Head Identification - District Standard
VDZ-04 - District Standard
SMA-80(1)-99 - District Standard
SMA-80(2)-96 - District Standard
MA-D-07 - District Standard
Installation of BBU (External Mount) - District Standard

Item 8:
This Project will be a Six-Day Workweek in accordance with Article 8.3.A.2.

Nighttime work is allowed in accordance with Article 8.3.C.1.

The following table is to be used in accordance with Special Provision 008-125:

Intersection	Intersection TCP Phase	Free Intersection Impact Days (days)	Daily Intersection Rental Charge ($)
Signalized Intersections			
CR 53/CR 88	Phase II Steps A, B	30	$300

Item 100:
Remove and replace the existing roadway signs as shown on the plans, or as directed, during construction within the right of way.

The limits of preparing right of way will be measured from SH 289 Sta. 303+05.00 to Sta. 519+00.00 along the centerline of construction.

Remove any and all remaining items not listed and paid for under other items of the contract, including but not limited to: old/abandoned utilities & manholes, driveways, fences, tress, miscellaneous structures, house slabs, parking lots and other miscellaneous items as encountered.

Item 104:
In those areas where the pavement is not to be overlaid, provide a smooth surface after the curb removal. Planing or grinding is considered an acceptable method at these locations. Measurement and payment is in accordance with this item.

Sawing of concrete is not paid for directly, but is considered subsidiary to this item.

Item 104 and 496:
Concrete pavement removed as a result of removing the inlets will not be paid for directly but will be considered as subsidiary to Item 496.

Removal of all concrete and structures of the types specified in the plans will be paid for under the pertinent bid item. The removal of other types of obstructions encountered will be paid for under Item 100, if applicable.

Removal of miscellaneous concrete will be paid for only as approved.

Item 105:
Take possession of recycled asphalt pavement from the project and recycle the material.

Saw existing asphalt along neat lines where portions are to be left in place temporarily or permanently. Sawing is not paid for directly, but is subsidiary to this item.

Properly dispose of unsalvageable material at your own expense.

The depth of reclamation does not include base material.

Item 110:
Scarify and loosen the excavated areas, unpaved surface areas, except rock, to a depth of at least 8 inches and compact in accordance with the specifications.

Perform the following test by an approved laboratory on excavated soils when used for roadway embankment: 1- Tex-145-E (Sulfate Content in Soils), 2- Tex-106-E (Plasticity Index). Provide the above-mentioned test results on sources outside of the right of way at no expense to the department. Contact the engineer for a list of approved laboratories. Notify the engineer 72 hours before sampling and testing material. Perform split-sample verification testing with the engineer when directed. The engineer will sample and test soils produced by the construction project for specification requirements or material sources specified in the plans.

Excavated shale is not an acceptable material for embankment.

Items 110 and 132:
Excavation and embankment for driveways, sleeper slabs, alleys and intersections will not be paid for directly, but will be considered subsidiary to these items.

Scarify and loosen the excavated areas, unpaved surface areas, except rock, to a depth of at least 8 inches and compact in accordance with the specifications.

Use an approved laboratory to perform tests for sulfate and plasticity index and provide results on sources outside the right of way at no additional expense to department. Test soil for sulfate levels in accordance with Tex-145-E. Contact the engineer for a list of approved laboratories. Notify the engineer 72 hours before sampling and testing material. Perform split-sample verification testing with the engineer when directed. The engineer will sample and test material produced by the construction project for specification requirements or material sources specified in plans.

When lime treatment is allowed to reduce Plasticity Index, apply lime slurry in accordance with Item 260, "Lime Treatment (Road-Mixed)." Furnish material containing sulfate at or below the threshold of 5000 parts per million (ppm). For material with sulfate levels greater than 3000 ppm, allow the mixture to mellow for at least three days, or as directed. The engineer will test material placed or excavated to a depth of one foot below and laterally to one foot outside the proposed treatment limit. Notify the engineer 48 hours before lime treatment of the material.

Shale is not an acceptable material for embankment. Do not use shaley clays in embankment unless approved in writing.

The top 4" of material in areas which will remain unpaved shall be fertile soil, easily cultivated, free from objectionable material, have a relatively high erosion resistance and be readily able to support the growth of planting, seeding or sodding.

Items 110, 132 and 164:
Perform vertical tracking on slopes to temporarily stabilize soil. Provide equipment with a track undercarriage capable of producing a linear soil impression measuring at least 12 inches in length by 2 to 4 inches in width by ½ to 2 inches in depth. Do not exceed 12 inches between track cleats. Install continuous linear track impressions where the minimum 12 inches in length impressions is perpendicular to the direction of water flow. Vertical tracking will not be paid for directly but considered subsidiary to these items.

Item 132:
Earth embankment Type C, is mainly composed of material other than shale. Furnish material that is free from vegetation or other objectionable material and that conforms to the requirements of Table 1 (Sheet B). If necessary, add lime slurry in accordance with Item 260, "Lime Treatment (Road-Mixed)" in order to meet these requirements. Use Tex-121-E, figure 1, page 5 to calculate the amount of lime required. Furnish material containing sulfate at or below the threshold of 5000 parts per million (ppm). For material with sulfate levels greater than 3000 ppm, allow the mixture to mellow for at least three days, or as directed. Test soil for sulfate levels in accordance with Tex-145-E. Use an approved laboratory to perform tests for sulfate and plasticity index and provide results on sources outside the right of way to the department.

Contact the engineer for a list of approved laboratories. Notify the engineer 48 hours before sampling and testing material. Perform split-sample verification testing with the engineer when directed. The engineer will sample and test material produced by the construction project for specification requirements or material sources specified in the plans. The engineer will test material placed or excavated to a depth of one foot below and laterally to one foot outside the proposed treatment limit. Lime treatment and testing of this material will not be paid for directly, but will be considered subsidiary to this item.

Pay close attention during liming, high sulfates are present. Do not allow the use of borrow materials in sections where flexbase is used. See PVR report.

Do not use shaley clays in embankment unless approved in writing.

Item 164:
Limits of seeding are for estimate purposes only and are subject to field measurement.

Item 247:
Compact to at least 98% of the maximum density determined by Tex-113-E. Construct uniform layer thickness of 12 inches, or less with the required density and moisture content. Triaxial class is required for Grade 1 and 2. Minimum PI is equal to three (3) for all grades.

The use of contractor-owned recycled crushed concrete is allowed provided it meets the Departmental Material Specification, DMS-11000 requirements.

Item 260:
Furnish and distribute MS-2 smoothly and evenly at the rate of 0.20 gallons per square yard to cure lime, as directed.

Provide Hydrated Lime Slurry and apply lime by slurry placement method.

Item 301:
Provide liquid antistripping agents unless otherwise directed. Provide manufacturer's instruction for liquid antistripping agent.

Add the minimum percentage determined by the manufacturer and try subsequent trials at 0.25% increments, unless otherwise instructed by the manufacturer.

Item 310:
Do not use MC-30 on base courses placed between April 16 and September 15.

Item 320:
The use of windrow pick-up equipment is allowed except on the first course of roadway material placed over the subgrade.

Item 340:
Design for a target Laboratory-molded density of 97.0% when using the TGC (Tex-204-F, Part I)

Use aggregate that meets the Surface Aggregate Classification (SAC) requirement of Class B.

Maximum requirement for coarse aggregate 5 cycle magnesium sulfate soundness is 25%. Meet this requirement for type B hot mix only.

Provide the engineer the opportunity to witness all mixture design tests. The engineer may require a retest if not given the opportunity to witness.

Dilution of tack is not allowed.

Provide PG binder 64-22 in Type B mixture.

Item 360:
Provide dowel support assemblies in concrete pavement constructed of No. 1/0 (0.306" diameter) wire in the main vertical members. Rigidly support the dowels in parallel positions and weld them on one end to the support frame. Provide weld attachments alternately on opposite ends of successive dowels. The support assembly is subject to approval.

Use of multiple piece tiebars will be required. Provide chairs for multiple piece tiebars, threaded connectors or other adequate devices, used in concrete paving, or tie them to the pavement reinforcing steel. If approved by the engineer for specific areas, in lieu of multiple piece tiebars, drill holes into the pavement and grout straight tiebars in place with epoxy. Use a non-impact, rotary core drill to prevent damage to the pavement unless otherwise directed. Clean the drill holes and then completely fill with epoxy before inserting the tiebar. Do not bend the tiebars or insert them into plastic concrete without the approval of the engineer.

Provide curbs monolithically constructed with the concrete pavement. If continuous monolithic curb has to be temporarily omitted for any reason, provide dowelled curbs in the proposed areas, as detailed in the plans, and apply an approved epoxy resin to the pavement to receive the curb as directed. This work and materials will not be paid for directly, but is considered subsidiary to this item.

Provide grooved joints at 10-foot intervals and ¾ inch expansion joint material for doweled curb at the same locations as on the existing pavement.

Curb transition is paid for as Type II curb.

The installation of curb openings is not paid for directly, but is considered subsidiary to this item.

Stockpile the concrete aggregates at the plant site.

Provide pavement widening joints, as detailed in the plans, at all locations where concrete pavement is placed adjacent to existing concrete pavement. Installation of these joints is not paid for directly, but is considered subsidiary to this item.

Payment for furnishing and installing the pre-molded expansion joint material between the retaining walls and concrete pavement is not paid for directly, but is considered subsidiary to this item.

Provide a curing machine equipped with rubber tires, or other acceptable arrangement, so that the machine will span the pavement and monolithic curb.

Place construction, sawed and contraction joints in accordance with the pavement detail sheet and as directed. Joint locations, other than as shown on the plans, are subject to approval. Pavement leaveouts are required on this project as necessary to provide for traffic at driveways and side streets as shown in the plans or as directed. The cost of providing these leaveouts, including the construction of a suitable crossover connection at each site, is not paid for directly but is considered subsidiary to this item.

If a traveling form paver is used, provide one equipped with an electronically operated horizontal control device.
Provide tiebars in longitudinal joints but do not place them within 15 inches of transverse joints.

Use "mechanical steel placing equipment" at the discretion of the engineer.

Provide Class HES concrete at the locations specified on the Major Intersections, Traffic Control Detail Sheet. Provide Class HES concrete to attain a minimum average compressive strength of 1800 psi within 4 hours.

Contractor personnel performing job-control testing on concrete must be ACI- Certified. Provide a copy of certification paper to the Engineer upon arrival and before testing at job site. Furnish hard copies of calibration reports for testing equipment when non-TxDOT approved equipment is used to test concrete.

The engineer may allow the use of local commercial laboratories under contract to provide these services.

Item 400:
Structural Excavation is not paid for directly but is considered subsidiary to pertinent Items.

When placing concrete storm drain pipe on slopes of greater than 10 percent, provide cement stabilized backfill to a depth shown on the plans. The aggregate shall conform to the requirements of Article 421.2.E.2.

Item 416:
Provide a formed smooth finish for all portions of drill shafts extending above proposed ground. Include cost for this work in the unit bid price for this item.

Traffic signal pole foundations will be paid for once regardless of extra work caused by obstructions.

Install a 5/8"x10' copper clad ground rod in each traffic signal pole foundation. The ground rod for each foundation will protrude above the finish grade of the foundation a minimum of 1" and a maximum of 2".

Form the above-grade portion of drill shafts, or the top two inches if flush with the grade, and provide a smooth finish for all portions of drill shafts extending above proposed ground. Include cost for this work in the unit bid price for this item.

Use concrete classified as "miscellaneous concrete" for ground mounted sign foundations, with the exception of large roadside signs and overhead sign structures.

Do not install PVC and/or rigid metal conduit in sign foundations for sign structures without sign lights.

CL A concrete shall be used for non-reinforced foundations. CL C concrete shall be used for reinforced foundations.

Payment will be made only once for drilling the shaft regardless of the extra work caused by obstructions.

Item 420:
Apply an ordinary surface finish to all concrete surfaces within 30 days after form removal.

NATIONAL BRIDGE INVENTORY NUMBERS:
Provide National Bridge Inventory (NBI) numbers on all bridge structures and bridge class culverts.

For Bridge Class Culverts, place National Bridge Inventory numbers at the middle of the downstream headwall using 3" block letters.

For all conditions, use appropriate die cut stencils and black paint for placement. All materials, labor and incidentals associated with placing NBI numbers are subsidiary to the various bid items.

Item 421:
Furnish mix designs to the Engineer in a format compatible to the latest version of the Department's Construction Management System (Site Manager). Mix Design templates will be provided by the Engineer.

Provide High Performance Concrete (HPC) of the class specified for all bridge approach slabs, abutments, bents, columns, slabs, sidewalks and medians.

Provide High Performance Concrete (HPC) of the class specified for all railing and permanent concrete traffic barrier placed on bridges or approach slabs.

Provide sulfate resistant concrete for box culverts and all drill shafts. High performance concrete meets the requirement for sulfate resistant concrete when Class C fly ash and Type I cement is not used in the mix design.
Strength evaluation using maturity testing, Tex-426-A, may be used for all concrete elements except drill shafts.

2 Replaced 7/5/11 JB

Fiber Reinforced Concrete (FRC) can be used as a substitute for Non-Structural Class Reinforced Concrete in Mow-Strip and Rip Rap Items as approved. FRC may also be used for other Non-Structural Class Reinforced Concrete Items as approved.

Provide a digital hydraulic compression testing Machine and accessories. The machine shall have a minimum testing range of 2500 pounds force to 250,000 pounds force with a hydraulic switching valve to allow for rapid advancing, hold, controlled advancing and rapid retracting. The machine shall have a load cell to measure compressive forces within the testing range and shall be calibrated and verified in accordance with ASTM latest version. The Machine can meet or exceed the following when approved by the Engineer: ELE International ACCU-TEK250 Digital Compression Tester including accessories or Forney F-250EX Standard Compression Machine including accessories or TxDOT approved equal.

Air-entrain all concrete except for Class "B" and concrete used in drilled shafts. For structural concrete, if the air content is more than 1.5% below the required air, follow manufacturer recommendations to add the necessary approved air bags to increase the air content at the job site. Limit the adding of air bags in the field to one trial. For structural concrete in abutments, bents and columns do not reject the load of concrete due to low air content; accept concrete based on strength tests. Structural concrete in approach slabs, slabs, sidewalks, medians and rails shall meet the provisions of the specification.

Item 449:
Use Crouse Hinds TL-2, OZ/Gedney Stl, Thomas & Betts Kopr-Shield or other approved electrically conducting lubricant compound.

Item 464:
All reinforced concrete storm drain pipe will be Class III unless noted otherwise on the plans.

The concrete collars and the connections of pipes to existing or proposed concrete boxes or pipe will not be paid for directly but will be considered subsidiary to the various bid items.

At locations where storm drains dead-end, plug with a concrete plug of a thickness equal to 1 ½ inches per foot of diameter of pipe with a minimum thickness of 3 inches. The cost of the plugs shall be included in the unit price bid per foot of the various storm drain pipes.

Item 471:
Tackweld all inlet grates and manhole covers to the frame with two 1-inch welds. Supply un-painted cast iron inlet grate and frame and/or cast iron manhole frame and cover.

Item 479:
Accept ownership of inlet grates and manhole covers and properly dispose of them outside the limits of the right of way in accordance with federal, state and local regulations.
Submit a plan detailing proposed methods of handling phased construction at manholes and water valves.

Payment for the phase construction will be considered subsidiary to this item.

Item 496:
Concrete pavement removed as a result of removing the inlets will not be paid for directly but will be considered as subsidiary to Item 496.

Inlet grates and manhole covers become the property of the contractor for disposal.

Item 502:
Provide written proposed lane closure information by 1:00 pm on the business day prior to the proposed closures. Do not close lanes when this requirement is not met.

Sequence work with consideration of the impact on the traveling public.

When excavation is required next to a pavement lane carrying traffic and the widening is not completed by the end of the work day, backfill against the edge of the pavement with at least a 3:1 slope using an acceptable material to support vehicular traffic. Carefully remove and dispose of this material when work resumes. Backfilling pavement edges, and the materials required for the work will be subsidiary to this item.

Place barricades and signs in locations that do not obstruct the sight distance of drivers entering the highway from driveways or side streets.

The Contractor shall keep the travel surfaces used in his hauling operations clear and free of dirt or other objectionable material.

Provide rectangular shape (CW12-2P) Temporary Clearance Signs on all bridges where the existing vertical clearance has changed. Install Signs to the satisfaction of the Engineer prior to opening to traffic. Plywood sign blanks will have minimum dimensions of 84" X 12". Work performed and materials are subsidiary to this item.

Do not operate or park any equipment/machinery closer than 30 feet from the traveled roadway after sunset unless authorized by the engineer.

When moving unlicensed equipment on or across any pavement or public highways, protect the pavement from all damage using an acceptable method.

Provide 1 shadow vehicle equipped with truck mounted attenuators as shown on the traffic control plan.

Additional lanes may be closed during Off Peak Times or Lowest Times with written permission of the Engineer. Lane Closures during Off Peak Times may be started earlier or be extended later with written permission of the Engineer.

Traffic Control Plans with Lane Closures causing backups of 20 minutes or greater in duration will be modified by the Engineer.

Limit lane closures along SH 289 to the hours between 9:00 am and 3:30 pm. Work in other areas of the project is not restricted to this time frame.

Provide and maintain temporary all-weather access to each business and/or residence adjacent to the project throughout the project except for permitted closures as shown on the plans. All-weather access may be ACP or compacted RAP or other materials approved by the Engineer.

Item 504:
Furnish one Field Office and Laboratory (Type B) at the project site, one Field Laboratory (type A) at the concrete batch plant and one Asphalt Mix Control Laboratory (Type D) at the asphalt mixing plant.

Meet the dimensional requirements specified for a Field Laboratory (Type A) for the Asphalt Mix Control Laboratory (Type D).

Provide one local phone line to the field office. Supply one phone jack and one telephone per each room in the field office. The cost of the phone installation and various monthly phone service charges will be the contractor's responsibility.

Parking shall be provided for 5 vehicles.

Chain link fencing will be provided around the field office/laboratory and parking areas.

Provide an all in one printer/scanner/fax/copier that is capable of accepting and producing 11"x17" prints with software that is compatible with TxDOT equipment, cost not in excess of $300. This is subsidiary to the various bid items.

When the contractor furnishes beam curing tanks, the tanks shall be elevated as directed by the Engineer to a maximum height of one foot.

Item 506:
Take all practicable precautions to prevent debris from being discharged into the Waters of Texas or a designated wetland. Install Best Management Practices before demolition begins and maintain them during the demolition. Remove any debris or construction material that escapes containment devices and are discharged into the restricted areas, before the next rain event or within 24 hours of the discharge.

If temporary construction stream crossings are allowed under a Nationwide Permit, submit in writing for approval the type and location of each temporary stream crossing. Use temporary bridges, timber mats, or other structurally sound and non-eroding material for temporary stream crossings. A temporary culvert crossing will consist of storm sewer pipes and 4- to 8-inch nominal size rock. Temporary stream crossings must not cause more than minimal changes to the hydraulic flow characteristics of the stream, increase flooding, or cause more than minimal degradation of water quality. Remove the temporary stream crossings in their entirety and return the affected areas to their pre-existing elevation. All work and materials use for temporary construction stream crossings will not be paid for directly but are subsidiary to pertinent Items.

SW3P Maintenance Reports are made every seven calendar days. Make corrections as soon as possible before the next anticipated rain event or within seven calendar days after being able to enter the site to work for each BMP. A BMP site being "Too Wet to Work" is the only

2 Replaced 7/5/11 JB

acceptable reason for not accomplishing the corrections with the seven calendar day time limit and should be thoroughly documented on Form 2118. If maintenance corrections are not made within this time frame then all work will cease, time charges will continue until SW3P is brought into compliance and is documented on Form 2118 after TxDOT review.

This in no way releases the contractor of liability for noncompliance.

Obtain from the Engineer a copy of the project's TPDES Storm Water Program and Notice of Intent or Construction Site Notice. Laminate the sheets and bond with adhesive to 36" X 48" plywood sign blanks. Ensure the sheets remain dry. Apply Type C Blue reflective sheeting as the background and add the text "SW3P" in 5" white lettering, centered at the top. Attach the signs to approved temporary mounts and locate at each of the project limits or as directed by the Engineer. SW3P Signs, maintenance, and repostings will be subsidiary to Item 502.

Item 508:
Testing of materials used in the construction of a temporary detour may be waived when approved by the Engineer.

Item 512:
The contractor will furnish pre-cast F Shape Barriers for traffic control, and remove and retain possession of non-permanent barriers at the end of the project. Pre-cast F Shape Barriers must have drainage slots as detailed on the Concrete Safety Barrier Standards. Submit for approval the type of barrier joint connection proposed for the project.

Alternative approved shapes (in addition to F-shape) will be allowed.

Provide one shape type to be used exclusively throughout construction.

Item 530:
Provide Class HES concrete at the locations specified on the Major Intersections, Traffic Control Detail Sheet.

Item 536:
Use Class "B" concrete for concrete medians and directional islands.

Item 538:
A Registered Professional Land Surveyor is required.

The Engineer will provide ROW maps.

Provide Type II markers at P.C.'s/P.T.'s of curves, on tangents longer than 1500' as Points on Tangents, and at break points in the ROW lines (including at intersection side streets).

Bronze disks may be ordered through the Survey Department, delivery time is approximately 60 days.

Project Number: C 91-4-55 SHEET 24

County: Collin Control: 0091-04-055

Highway: SH 289

Item 542:
Metal Beam Guard Fence deemed salvageable by the Engineer is to be removed from this project, hauled and stockpiled at 2205 South State Highway 5, McKinney, TX 75069. The work involved in hauling this material will not be paid for directly, but will be considered subsidiary to this item.

Item 545:
All crash cushion attenuators, both permanent and temporary, are designed for 45-mph unidirectional traffic and will be attached to the concrete barrier per the plans,

Item 585:
Use Surface Test Type A on all intersections and driveways.

Use Surface Test Type B pay adjustment schedule 2 on the travel lanes.

Item 618:
The location of conduits and ground boxes are diagrammatic only and may be shifted to accommodate field conditions as directed.

Secure permission and approval from the proper authority prior to cutting into or removing any sidewalks or curbs for installation of this Item.

Place conduit under existing pavement by an approved boring method. Do not place boring pits closer than 2 feet from the edge of the pavement unless otherwise directed. Do not use water jetting. When boring is used for under pavement conduit installations, the maximum allowable over-cut is 1" in diameter. When conduits are bored, do not exceed 18 inches in the vertical and horizontal tolerances as measured from the intended target point.

Do not use a pneumatically driven device for punching holes beneath the pavement (commonly known as a "missile").

Furnish and install a non-metallic pull rope in conduit runs in excess of 50 feet.

Use a colored cleaner-primer on all PVC to PVC joints before application of PVC cement.

Seal all conduit ends with a permanently soft, non-toxic duct seal. Use a duct seal that does not adversely affect other plastic materials or corrode metals.

Furnish and install non-metallic pull ropes in conduit installed for future use and cap using standard weather-tight conduit caps, as approved. This work will not be paid for directly, but is subsidiary to this Item.

Item 620:
The grounding conductor and equipment grounding conductor shall be identified by a continuous green colored jacket insulation or bare wire. Grounded conductors (Neutral) shall be identified by a continuous white colored jacket. Ungrounded conductors (Hot) in a 120/240v or 240/480v system shall be identified by each pole or leg. One leg shall be identified by a continuous black colored jacket and the other leg by a continuous red colored jacket.

2 Replaced 7/5/11 JB

For Ped poles (Item 687) within the project, provide single-pole breakaway disconnects. Use Bussman HEBW, Littlefuse LEB, Ferraz-Shawmut FEB, or equal on ungrounded conductors. For all grounded conductors use Bussman HET, Littlefuse LET, Ferraz-Shawmut FEBN, or equal. These breakaway connectors have a white colored marking and a permanently installed solid neutral.

Item 627:
Use the timber pole heights, as shown on the plans and in the material summary, for bidding purposes only. Coordinate pole locations, and make field measurements before construction to ensure a vertical clearance of 17 to 19 feet from the highest point on the roadway surface to the span. In addition, place the signal heads a minimum of 40 feet and a maximum of 180 feet from the stop line. If the nearest signal must be more than 180 feet from the stop line, place a supplemental near-side signal head. Determine the field measurements and elevations from the actual field location of the poles, considering all above and below ground utilities and existing roadway elevations.

Item 628:
Contact the appropriate utility company during the first three weeks of the project lead-time period to allow adequate time for any necessary utility adjustments, transformer installation, etc.

Granite concrete service pole embedment shall be 10'.

Label the service enclosures indicating service address as well as all required information as shown on the Electrical Detail (ED) standard sheets. Labeling shall be silk screening or other acceptable method. This work will not be paid for directly, but is subsidiary to this Item.

When concrete for service pole foundations is required, use Class A in accordance with Item 421, "Hydraulic Cement Concrete", except consider the concrete subsidiary to Item 628 for payment purposes. When reinforcing steel for service pole foundations is required, it will be in accordance with Item 440,"Reinforcing Steel", except consider the steel subsidiary to Item 628 for payment purposes.

Use only white insulated wire for neutral wire.

Bill the electrical service power usage to the Texas Department of Transportation.

Item 644:
Prior to taking elevation to determine lengths for fabrication of sign posts and/or sign support towers, obtain verification of all proposed locations.

Provide field galvanizing and metalizing equipment, as per Item 445, at all times and make repairs to galvanized surfaces according to the above specification item at intervals as directed.

After sign supports with signs attached have been erected, wash individual units requiring cleaning with an approved cleaning solution to remove all grease, oil, dirt, smears, streaks, and other foreign particles.

△2 Replaced 7/5/11 JB

Provide six (6) sets of shop drawings for signs. The shop drawings shall show the details of the panels, wind beams, stiffeners, joint backing plates, splices, fasteners, brackets, and sign support connections. The shop drawings shall show letter types and sizes, interline spacing and message arrangements.

Affix a sign identification decal to the back of all signs in accordance with Item 643.

Item 656:
Form a 3/4-inch chamfer on the top edge of each signal pole foundation.

Probe for utilities and underground structures prior to drilling foundations. Foundations shall be paid for once regardless of extra work caused by obstructions.

Item 680:
Requirements for this Item include the following work, all of which are subsidiary to this Item:

1. Notify the District Signal Maintenance Office at (214)320-6682 and Construction Office at (214)320-6694 one week before beginning any work involving traffic signals.
2. Provide submittal literature for all traffic signal equipment before installation.
3. Connect all field wiring to the existing controller assembly, including SSR coaxial cable termination into the polyphaser. The District will assist in determining how the detection cables are to be connected, and will also program the controller for operation, hook up the malfunction management unit (MMU) or conflict monitor, detector units, and other equipment, and turn on the controller. Have a qualified technician and a representative from the controller supplier on the project site to place the traffic signals in operation.
4. Relocate existing signs as shown. Furnish and install all other sign panels for mounting on poles, mast arms, and span wires. Fabricate the sign panels in accordance with Item 636, and mount with Astro-Sign Brac, Signfix aluminum channel, or equal as approved by the Engineer. Submit five (5) sets of shop drawings for street name signs.
5. Use multi-tap ballasts (120/240 volts) for luminaires on signal poles.
6. Use qualified personnel to respond to and diagnose all trouble calls during the thirty-day test period. Repair any malfunction to Contractor-supplied signal equipment. Provide to the Engineer a local telephone number, not subject to frequent changes and available on a 24-hour basis, for reporting trouble calls. Response time to reported calls must be less than 2 hours. Make appropriate repairs within 24 hours. Place a logbook in the controller cabinet and keep a record of each trouble call reported. Notify the Engineer of each trouble call. Do not clear the error log in the conflict monitor or MMU during the thirty-day test period without approval.
7. Prevent any damage to property owner's poles, fences, shrubs, mailboxes, etc. Protect all underground and overhead utilities and repair any damage. Provide access to all driveways during construction.
8. Integrate the proposed traffic signal(s) into the existing closed loop system as shown on the plans. Aries closed loop software, which utilizes Econolite controllers, is currently in use in the Dallas District.
9. Relocate SSR antenna from timber pole T4 to mast arm P7 at the intersection of SH 289 and CR 53/CR 88. Provide all necessary mounting hardware.

10. Clean and relocate VIVDS cameras from the temporary signals to the permanent signals at SH 289 at FM 455/ Pecan St. and SH 289 at CR 53/ CR 88. Provide all necessary mounting hardware.
11. Relocate radar detectors from the temporary signals to the permanent signals at SH 289 at FM 455/ Pecan St. and SH 289 at CR 53/ CR 88. Provide all necessary mounting hardware.

Item 681:
Requirements for this Item include the following work, all of which are subsidiary to this Item:

1. Re-guy signal heads and re-strap the cable after making adjustments to head locations. Accomplish relocation of signal heads for a phase change during the same day.
2. Bottom tether cable for signal heads and signs will be required.
3. Provide submittal literature for all traffic signal equipment before installation.
4. Furnish and install a new eight-phase NEMA TS2 Type 2 controller and cabinet, meeting the requirements of Departmental Materials Specifications DMS-11170. Provide the cabinet (NEMA TS2 Type 1) with an "A" connector harness (for NEMA TS2 Type2 controller). Provide detector toggle switches with a fixed position that additionally permit the user to disconnect the detector. For both ground- and pole-mounted cabinets, provide cabinet configuration 4 (16 position load bay) in a TS2 Size 6 cabinet.
5. Deliver the cabinet, controller, and accessories (with all cabinet components completely connected and securely strapped down) to the District Signal Shop, 4777 E Hwy 80, Mesquite, for testing. Notify the District Signal Shop two working days before delivery at (214)320-6682.
6. Install the controller cabinet in an orientation as directed.
7. Connect all field wiring to the controller assembly, including SSR coaxial cable termination into the polyphaser. The District will assist in determining how the detection cables are to be connected, and will also program the controller for operation, hook up the malfunction management unit (MMU) or conflict monitor, detector units, and other equipment, and turn on the controller. Pick up the signal cabinet from the District Signal Shop. Have a qualified technician and a representative from the controller supplier on the project site to place the traffic signals in operation.
8. Operation and maintenance of the temporary signal includes repair of Contractor-supplied equipment, providing of telephone number to the District for trouble calls, adjustment of timing, and the generation and implementation of traffic signal timing during all phases of the project. Make traffic turning movement volume counts on weekdays between 6 AM and 9 AM, between 11 AM and 1 PM, and between 4 PM and 7 PM and on Saturday and Sunday between 10 AM and 4 PM to generate the signal timing. Signal may be required to operate fixed-time. Use the timing plan generation software known as "Synchro" to generate the timing cycle lengths and splits. Prepare the timing plan under the supervision of a registered Traffic Engineer, and submit for approval. Load the approved timing plan into the controller and fine-tune the timing with field observations. Make timing adjustments for capacity and roadway alignment changes.
9. Integrate the proposed traffic signal(s) into the existing closed loop system as shown on the plans. Aries closed loop software, which utilizes Econolite controllers, is currently in use in the Dallas District. Provide controllers on this project that fully communicate with the existing closed loop system.
10. Relocate existing signs as shown.

11. Provide eight (8) hours of operational and maintenance training for all brands of closed loop systems provided on this project to designated personnel. Provide this training for a maximum of 10 people, at a time and location approved by the Engineer. Provide training which includes, but not be limited to, "hands-on" operation for each type of equipment, explanation of all system commands, functions, and usage; required preventative maintenance procedures; and system "trouble-shooting" or problem identification. Submit an outline of the proposed training material for approval at least 60 days before the training begins.
12. Relocate SSR equipment from existing controller cabinet to the proposed controller cabinet at SH 289 and CR 53/ CR 88 and SH 289 and FM 455/ Pecan St. Relocate SSR antenna from the existing signals on to the temporary signal, timber pole T4, at SH 289 and CR 53/ CR 88 and on the roadway illumination pole, P1, at SH 289 and FM 455/ Pecan St. Provide all necessary hardware to relocate SSR antennas.

Item 682:
Install signal head attachments so that the wiring to each signal head passes from the mast arm through the attachment hardware to the signal head. Do not leave cable or wiring exposed.

Provide signal head attachments that allow for adjustment about the horizontal and vertical axis.

Provide aluminum signal heads and aluminum tubing in the following color: Federal Yellow #13538 of Federal Standard 595. Provide back plates, louvers, and the inside of visors with a flat black finish. Provide polycarbonate back plates for all traffic signal heads.

Turn down signal heads or cover with burlap or other material, as approved, until traffic signal is placed in operation.

Mount signal heads level and plumb and aimed as directed.

Item 684:
Provide stranded 14 AWG Type A signal cables.

Provide a separate multi-conductor signal cable (14 AWG) inside pedestal poles and signal poles from the terminal strip to each signal head as shown on the plans.

Identify each cable as shown on the plans (cable 1, etc.) with permanent marking labels (Panduit Type PLM standard single marker tie, Thomas&Betts Type 548M, or equal) at each ground box, pole base, and controller.

Item 686:
Provide 12 circuit Buchanan Type 112SN, Kulka Type 985-GP-12 CU, or equal terminal strips in the signal pole access compartment. Provide additional terminal strips of 8 circuits each when more than 12 circuits are required. The conductors for the Line and Load side of the terminal strip shall be identified with a plastic label with two straps per tag. The line side shall have each signal head, PED head, and push button identified on the tag.

2 Replaced 7/5/11 JB

Mark pole shafts and mast arms with the identification numbers from the plans to facilitate field-assembly. Identify pole shafts and mast arms by intersection for projects with multiple intersections.

Provide nuts on top and bottom (double nuts) of the base plate as shown on the plans.

Set anchor bolts for mast arm signal poles and strain poles so that two are in tension and two are in compression. Obtain approval of anchor bolt placement before placing concrete.

Use the traffic signal pole heights and mast arm lengths shown on the plans and in the material summary for bidding purposes only. Make field measurements to determine the actual pole height and mast arm length required. Provide vertical clearance of 17 to 19 feet from the roadway to the lowest point of the signal head or mast arm. Place signal heads 40 feet minimum and 180 feet maximum from the stop line. If the nearest signal is more than 180 feet from the stop line, place a supplemental near-side signal head. Determine the field measurements and elevations from the actual field location of the poles, considering all above and below ground utilities and existing roadway elevations.

Provide vibration dampers for mast arms 28 feet long and longer. Use dampers 18"x48" for arms up to 48 feet long, and 16"x66" for longer mast arms. Install using Astro-sign Brac, Signfix aluminum channel, or equal, at a maximum of 3 feet from the end of the mast arm.

Item 688:
Verify the location of the push button assemblies and the direction of the arrows on the signs prior to installation.

Item 730:
Mow non-paved areas within the project prior to placement of permanent vegetation. Mow up to three (3) cycles per growing season.

Item 6006:
Supply one spare omni-directional and one uni-directional antenna, and two spare spread spectrum radios. Deliver to the District Signal Shop at 4777 E. Hwy 80, Mesquite.

Install the coaxial cable so that it is not exposed to the outdoor environment.

Item 6007:
Salvage the existing traffic signals at SH 289 & CR 53/ CR 88 and SH 289 & FM 455/ Pecan St. as shown on the plans. At the intersection of SH 289 & CR 53/ 88 salvage cabinet, service pole, signal heads, VIVDS and any other equipment as directed. At the intersection of SH 289 & FM 455/ Pecan St. salvage cabinet, service pole and equipment, signal heads, VIVDS and any other equipment as directed. This equipment remains the property of the Texas Department of Transportation, and is to be stockpiled at a TxDOT maintenance yard as directed. All other material removed in this project will become the property of the Contractor. Dispose of material off the right of way in accordance with federal, state, and local regulations. Maintain the operation of the existing traffic signal until directed to remove it.

Completely remove timber poles not set in concrete without cutting off the pole.

Item 6266:
Provide a Video Processor System (VPS) that can provide up to twenty-four (24) detector outputs to the controller from up to eight (8) camera/video processor units (C/VPU). Route the detector outputs through the detector panel and the detector test switches. For each C/VPU, provide a field of view with a minimum of twenty-four (24) virtual detection zones for vehicle detection.
(Note: Use one processor system per intersection)
If not terminated through the backplane of the card rack, wire the outputs as follows:

Output	Detector	Output	Detector
1	1-1	13	Spare
2	6-1	14	Spare
3	6-2	15	Spare
4	5-1	16	Spare
5	2-1	17	Spare
6	2-2	18	Spare
7	3-1	19	Spare
8	8-1	20	Spare
9	8-2	21	Spare
10	7-1	22	Spare
11	4-1	23	Spare
12	4-2	24	Spare

Provide 11 cameras for this project, including one (1) spare camera.

Central control will not be required on this project.

Provide a set-up system. Load required set-up software onto all of the District Signal Shop's notebook computers and provide all necessary licensing. The Contractor does not provide computers as part of the set-up system.

Supply an interface software package that will operate with Windows 98, 2000, 7, NT and Vista.

Ensure the C/VPU operational software is stored internally in flash memory and capable of being updated without the removal and replacement of memory devices.

Install the VIVDS detection zones as directed. Have qualified personnel on site at the time of the signal turn-on to assist with the installation of VIVDS detection zones.

If the camera locations shown in the plans do not allow for proper sight of the proposed detection zones, relocate the cameras as needed and as directed. This labor and material cost will not be paid separately, but is subsidiary to this item.

Provide Field Communications Link required by the manufacturer of the video detection system. These cables will be paid for as the type shown in the plans regardless of actual type of cable.

2 Replaced 7/5/11 JB

Project Number: C 91-4-55 **SHEET 28**

County: Collin **Control: 0091-04-055**

Highway: SH 289

The list of material below is for the Contractor's information only.
It is the responsibility of the Contractor to verify
all items and quantities listed below.

LIST OF MATERIAL/LABOR
SH 289 at CR 53/ CR 88
SUBSIDIARY TO ITEM 680

DESCRIPTION	UNIT	QUANTITY
250W HPS LUMINAIRE	EA	2
REGULATORY SIGN PANEL (R10-12, ETC)	EA	2
SINGLE STREET NAME SIGN PANEL	EA	2
DUAL STREET NAME SIGN PANEL	EA	2
REWIRE EXISTING CONTROLLER	EA	1
RELOCATE EXISTING SSR ANTENNA	EA	1
CLEAN AND RELOCATE EXISTING VIVDS CAMERAS	EA	4
RELOCATE EXISTING RADAR DETECTORS	EA	2
RADAR DETECTION COAXIAL CABLE	LF	460

Project Number: C 91-4-55 **SHEET 28**

County: Collin **Control: 0091-04-055**

Highway: SH 289

LIST OF MATERIAL/LABOR
SH 289 at FM 455/ PECAN ST
SUBSIDIARY TO ITEM 680

DESCRIPTION	UNIT	QUANTITY
250W HPS LUMINAIRE	EA	3
REGULATORY SIGN PANEL (R10-12, ETC)	EA	2
SINGLE STREET NAME SIGN PANEL	EA	2
DUAL STREET NAME SIGN PANEL	EA	2
REWIRE EXISTING CONTROLLER	EA	1
CLEAN AND RELOCATE EXISTING VIVDS CAMERAS	EA	6
RELOCATE EXISTING RADAR DETECTORS	EA	2
RADAR DECTECTION COAXIAL CABLE	LF	611

2 Replaced 7/5/11 JB

Project Number: C 91-4-55 **SHEET 29**

County: Collin **Control: 0091-04-055**

Highway: SH 289

LIST OF MATERIAL/LABOR
SH 289 at CR 53/ CR 88
SUBSIDIARY TO ITEM 681

DESCRIPTION	UNIT	QUANTITY
40 FT TIMBER POLE (CLASS 2)	EA	4
8 FT LUMINAIRE MAST ARM FOR WOOD POLE MOUNTING W/ 250W HPS LUMINAIRE	EA	2
CABLE STRAPS	EA	1,141
3/8 INCH ZINC-COATED STRANDED STEEL CABLE	LF	2,113
1/4 INCH ZINC-COATED STRANDED STEEL CABLE	LF	571
GROUND ANCHORS	EA	8
YELLOW PLASTIC GUY GUARD	EA	8
DOUBLE EYE ANCHOR ROD	EA	8
5/8" X 8' COPPERCLAD GROUND ROD W/CLAMP	EA	1
2 INCH WEATHERHEAD	EA	6
4 INCH WEATHERHEAD	EA	1
8 PHASE NEMA CONTROLLER COMPLETE W/ CABINET AND ACCESSORIES	EA	1
TRAFFIC SIGNAL CONTROLLER FOUNDATION	EA	1
RELOCATE REGULATORY SIGN PANEL (R10-12, ETC)	EA	2
RELOCATE SINGLE STREET NAME SIGN PANEL	EA	4
CONCRETE PAD (8' X 9' X 6", CLASS B)	CY	1.3
RELOCATE EXISTING SSR	EA	1
RELOCATE EXISTING SSR ANTENNA	EA	1
CONDT (PVC) (SCHD 40) 2"	LF	7
CONDT (PVC) (SCHD 40) 4"	LF	52

△2 Replaced 7/5/11 JB

Project Number: C 91-4-55 **SHEET 29**

County: Collin **Control: 0091-04-055**

Highway: SH 289

CONDT (RM) (2")	LF	54
CONDT (RM) (4")	LF	19
ELEC CONDR (NO. 6) BARE	LF	39
ELEC CONDR (NO. 6) INSULATED	LF	46
ELEC CONDR (NO. 8) BARE	LF	93
ELEC CONDR (NO. 8) INSULATED	LF	796
GROUND BOX TY C (162911) W/ APRON	EA	1
BACK PLATE (12 IN) (3 SEC)	EA	5
BACK PLATE (12 IN) (4 SEC)	EA	2
BACK PLATE (12 IN) (5 SEC)	EA	1
VEH SIG SEC (12 IN) LED (GRN ARW)	EA	3
VEH SIG SEC (12 IN) LED (GRN)	EA	8
VEH SIG SEC (12 IN) LED (YEL ARW)	EA	1
VEH SIG SEC (12 IN) LED (YEL)	EA	8
VEH SIG SEC (12 IN) LED (RED)	EA	8
TRF SIG CBL (TY A) (14 AWG) (10 CONDR)	LF	835
SSR COAXIAL CABLE	LF	65
BBU SYSTEM (EXTERNAL BATT CABINET)	EA	1
VIVDS PROCESSOR SYSTEM	EA	1
VIVDS CAMERA ASSEMBLY	EA	4
VIVDS COMMUNICATION CABLE (COAXIAL)	LF	826
VIVDS SET-UP SYSTEM	EA	1
RADAR ADVANCE DETECTION DEVICE	EA	2

LIST OF MATERIAL/LABOR
SH 289 at FM 455/ PECAN ST
SUBSIDIARY TO ITEM 681

DESCRIPTION	UNIT	QUANTITY
40 FT TIMBER POLE (CLASS 2)	EA	4
8 FT LUMINAIRE MAST ARM FOR WOOD POLE MOUNTING W/ 250W HPS LUMINAIRE	EA	3
CABLE STRAPS	EA	1,622
3/8 INCH ZINC-COATED STRANDED STEEL CABLE	LF	2,914
1/4 INCH ZINC-COATED STRANDED STEEL CABLE	LF	658
GROUND ANCHORS	EA	8
YELLOW PLASTIC GUY GUARD	EA	8
DOUBLE EYE ANCHOR ROD	EA	8
5/8" X 8' COPPERCLAD GROUND ROD W/CLAMP	EA	1
2 INCH WEATHERHEAD	EA	7
4 INCH WEATHERHEAD	EA	1
8 PHASE NEMA CONTROLLER COMPLETE W/ CABINET AND ACCESSORIES	EA	1
TRAFFIC SIGNAL CONTROLLER FOUNDATION	EA	1
RELOCATE REGULATORY SIGN PANEL (R10-12, ETC)	EA	2
RELOCATE SINGLE STREET NAME SIGN PANEL	EA	4
CONCRETE PAD (8' X 9' X 6", CLASS B)	CY	1.3
RELOCATE EXISTING SSR	EA	1
RELOCATE EXISTING SSR ANTENNA	EA	1
CONDT (PVC) (SCHD 40) 2"	LF	23
CONDT (PVC) (SCHD 40) 4"	LF	83

△2 Replaced 7/5/11 JB

Project Number: C 91-4-55 SHEET 30
County: Collin Control: 0091-04-055
Highway: SH 289

CONDT (RM) (2")	LF	61
CONDT (RM) (4")	LF	19
ELEC CONDR (NO. 6) BARE	LF	78
ELEC CONDR (NO. 6) INSULATED	LF	72
ELEC CONDR (NO. 8) BARE	LF	108
ELEC CONDR (NO. 8) INSULATED	LF	1,258
GROUND BOX TY C (162911) W/ APRON	EA	1
BACK PLATE (12 IN) (3 SEC)	EA	7
BACK PLATE (12 IN) (4 SEC)	EA	2
BACK PLATE (12 IN) (5 SEC)	EA	2
VEH SIG SEC (12 IN) LED (GRN ARW)	EA	4
VEH SIG SEC (12 IN) LED (GRN)	EA	11
VEH SIG SEC (12 IN) LED (YEL ARW)	EA	2
VEH SIG SEC (12 IN) LED (YEL)	EA	11
VEH SIG SEC (12 IN) LED (RED)	EA	11
TRF SIG CBL (TY A) (14 AWG) (12 CONDR)	LF	1,033
SSR COAXIAL CABLE	LF	79
BBU SYSTEM (EXTERNAL BATT CABINET)	EA	1
VIVDS PROCESSOR SYSTEM	EA	1
VIVDS CAMERA ASSEMBLY	EA	6
VIVDS COMMUNICATION CABLE (COAXIAL)	LF	1,423
VIVDS SET-UP SYSTEM	EA	1
RADAR ADVANCE DETECTION DEVICE	EA	2

ESTIMATE SUMMARY

EST	FINAL	EST	FINAL	EST	FINAL	CONTROL 0091-04-055 SH 289 EST	FINAL	ALT	ITEM CODE: ITEM CODE	DESC CODE	SP NO	DESCRIPTION	UNIT	TOTAL EST	FINAL
						216.000			100	2002	002	PREPARING ROW	STA	216.000	
						1215.000			104	2001		REMOVING CONC (PAV)	SY	1215.000	
						43.500			104	2009		REMOVING CONC (RIPRAP)	SY	43.500	
						6242.190			104	2017		REMOVING CONC (DRIVEWAYS)	SY	6242.190	
						115863.000			105	2061		REMOV STAB BASE & ASPH PAV (8"-20")	SY	115863.000	
						78713.820			110	2001		EXCAVATION (ROADWAY)	CY	78713.820	
						95302.850			132	2006		EMBANKMENT (FINAL)(DENS CONT)(TY C)	CY	95302.850	
						515.000			162	2002		BLOCK SODDING	SY	515.000	
						223184.000			164	2039	002	DRILL SEEDING (PERM) (URBAN) (CLAY)	SY	223184.000	
						223184.000			164	2051	002	DRILL SEED (TEMP)(WARM OR COOL)	SY	223184.000	
						12928.000			168	2001		VEGETATIVE WATERING	MG	12928.000	
						18108.370			247	2053	033	FL BS (CMP IN PLC)(TY D GR 1)(FNAL POS)	CY	18108.370	
						1659.660			260	2002	002	LIME (HYDRATED LIME (SLURRY))	TON	1659.660	
						99535.810			260	2027	002	LIME TRT (EXST MATL)(8")	SY	99535.810	
						14453.050			310	2005		PRIME COAT (MC-30 OR AE-P)	GAL	14453.050	
						43285.910			340	2011	003	D-GR HMA(METH) TY-B PG64-22	TON	43285.910	
						161276.060			360	2001	003	CONC PVMT (CONT REINF-CRCP)(8")	SY	161276.060	
						86159.000			360	2018	003	CURB (TYPE II)	LF	86159.000	
						13.000			400	2005		CEM STABIL BKFL	CY	13.000	
						15147.000			402	2001		TRENCH EXCAVATION PROTECTION	LF	15147.000	
						10217.000			403	2001		TEMPORARY SPL SHORING	SF	10217.000	
						10.000			416	2029	001	DRILL SHAFT (RDWY ILL POLE) (30 IN)	LF	10.000	
						78.000			416	2032	001	DRILL SHAFT (TRF SIG POLE) (36 IN)	LF	78.000	
						44.000			416	2034	001	DRILL SHAFT (TRF SIG POLE) (48 IN)	LF	44.000	
						54.000			432	2001		RIPRAP (CONC)(4 IN)	CY	54.000	
						27.500			432	2039		RIPRAP (MOW STRIP)(4 IN)	CY	27.500	
						490.000			450	2071	001	RAIL (TY C402)	LF	490.000	
						1619.000			459	2012		GABION MATTRESSES (GALV)(18 IN)	SY	1619.000	
						867.000			462	2001	011	CONC BOX CULV (3 FT X 2 FT)	LF	867.000	
						158.000			462	2010	011	CONC BOX CULV (6 FT X 3 FT)	LF	158.000	
						317.000			462	2011	011	CONC BOX CULV (6 FT X 4 FT)	LF	317.000	
						376.000			462	2015	011	CONC BOX CULV (7 FT X 4 FT)	LF	376.000	
						921.000			462	2019	011	CONC BOX CULV (8 FT X 4 FT)	LF	921.000	
						336.000			462	2020	011	CONC BOX CULV (8 FT X 5 FT)	LF	336.000	
						224.000			462	2021	011	CONC BOX CULV (8 FT X 6 FT)	LF	224.000	
						342.000			462	2024	011	CONC BOX CULV (9 FT X 5 FT)	LF	342.000	
						387.000			462	2027	011	CONC BOX CULV (9 FT X 8 FT)	LF	387.000	
						336.000			462	2029	011	CONC BOX CULV (10 FT X 5 FT)	LF	336.000	
						357.000			462	2062	011	CONC BOX CULV (12 FT X 6 FT)	LF	357.000	
						17.000			464	2003	003	RC PIPE (CL III)(18 IN)	LF	17.000	
						27484.000			464	2005	003	RC PIPE (CL III)(24 IN)	LF	27484.000	
						1119.000			464	2006	003	RC PIPE (CL III)(27 IN)	LF	1119.000	
						5004.000			464	2007	003	RC PIPE (CL III)(30 IN)	LF	5004.000	
						2125.000			464	2009	003	RC PIPE (CL III)(36 IN)	LF	2125.000	
						413.000			464	2010	003	RC PIPE (CL III)(42 IN)	LF	413.000	
						598.000			464	2011	003	RC PIPE (CL III)(48 IN)	LF	598.000	
						9.000			465	2005	001	MANH (COMPL)(TY M)	EA	9.000	
						211.000			465	2115	001	INLET (COMPL)(TY I)(MOD)	EA	211.000	
						328.000			465	2221	001	INLET EXT (TY I)	EA	328.000	
						13.000			465	2500	001	INLET(COMPL)(DROP)(TY C)(3-GRATE)	EA	13.000	

3 REPLACED 7/6/11 JB

ESTIMATE & QUANTITY SHEET

DIST	COUNTY	CCSJ	SHEET
18	COLLIN	0091-04-055	32

ESTIMATE SUMMARY

						CONTROL 0091-04-055 SH 289		ALT	ITEM CODE			DESCRIPTION	UNIT	TOTAL	
EST	FINAL	EST	FINAL	EST	FINAL	EST	FINAL		ITEM CODE	DESC CODE	SP NO			EST	FINAL
						5.000			465	2507	001	INLET (COMPL)(DROP)(TY C)(1-GRATE)	EA	5.000	
						8.000			465	2508	001	INLET (COMPL)(DROP)(TY C)(2-GRATE)	EA	8.000	
						1.000			466	2007		WINGWALL (SW-0)(HW=5 FT)	EA	1.000	
						1.000			466	2009		WINGWALL (SW-0)(HW=7 FT)	EA	1.000	
						1.000			466	2010		WINGWALL (SW-0)(HW=8 FT)	EA	1.000	
						1.000			466	2021		WINGWALL (FW-0)(HW=5 FT)	EA	1.000	
						1.000			466	2026		WINGWALL (FW-0)(HW=10 FT)	EA	1.000	
						1.000			466	2043		WINGWALL (FW-S)(HW=13 FT)	EA	1.000	
						1.000			466	2050		WINGWALL (PW)(HW=6 FT)	EA	1.000	
						1.000			466	2051		WINGWALL (PW)(HW=7 FT)	EA	1.000	
						3.000			466	2052		WINGWALL (PW)(HW=8 FT)	EA	3.000	
						4.000			466	2054		WINGWALL (PW)(HW=10 FT)	EA	4.000	
						4.000			466	2055		WINGWALL (PW)(HW=11 FT)	EA	4.000	
						1.000			466	2056		WINGWALL (PW)(HW=12 FT)	EA	1.000	
						31.000			472	2005		REMOV & RE-LAY PIPE (24 IN)	LF	31.000	
						1.000			496	2002		REMOV STR (INLET)	EA	1.000	
						26.000			496	2004		REMOV STR (SET)	EA	26.000	
						24.000			496	2005		REMOV STR (WINGWALL)	EA	24.000	
						13.000			496	2006		REMOV STR (HEADWALL)	EA	13.000	
					1	2070.000			496	2007		REMOV STR (PIPE)	LF	2070.000	
						2183.000			496	2008		REMOV STR (BOX CULVERT)	LF	2183.000	
						1.000			500	2001	005	MOBILIZATION	LS	1.000	
						20.000			502	2001	033	BARRICADES, SIGNS AND TRAFFIC HANDLING	MO	20.000	
						1495.000			506	2003	010	ROCK FILTER DAMS (INSTALL) (TY 3)	LF	1495.000	
						1495.000			506	2009	010	ROCK FILTER DAMS (REMOVE)	LF	1495.000	
						589.000			506	2016	010	CONSTRUCTION EXITS (INSTALL) (TY 1)	SY	589.000	
						589.000			506	2019	010	CONSTRUCTION EXITS (REMOVE)	SY	589.000	
						14008.000			508	2002		CONSTRUCTING DETOURS	SY	14008.000	
						19730.000			512	2048	002	PORT CTB (FUR & INST)(F-SHAPE)(TY 1)	LF	19730.000	
						19400.000			512	2050	002	PORT CTB (MOVE)(F-SHAPE)(TY 1)	LF	19400.000	
						19730.000			512	2052	002	PORT CTB (REMOVE)(F-SHAPE)(TY 1)	LF	19730.000	
						4316.920			530	2010		DRIVEWAYS (CONC)	SY	4316.920	
						1355.400			530	2011		DRIVEWAYS (ACP)	SY	1355.400	
						5893.000			530	2056		INTERSECTIONS (CONC)(HES)	SY	5893.000	
						10.000			531	2010		CURB RAMPS (TY 7)	EA	10.000	
						24.000			531	2012		CURB RAMPS (TY 9)	EA	24.000	
						126.000			531	2015		CONC SIDEWALKS (4")	SY	126.000	
						4.000			531	2017		CURB RAMPS (TY 21)	EA	4.000	
						34.000			538	2001		RIGHT OF WAY MARKERS	EA	34.000	
						884.000			540	2001	023	MTL W-BEAM GD FEN (TIM POST)	LF	884.000	
						6.000			540	2012	023	MTL BEAM GD FEN TRANS (TL2)	EA	6.000	
						3.000			540	2036	023	DRIVEWAY TERMINAL ANCHOR SECTION	EA	3.000	
						56.000			540	2037	023	MTL W - BEAM GD FEN(CRT POST)(SHRT RAD)	LF	56.000	
						280.000			542	2001		REMOVING METAL BEAM GUARD FENCE	LF	280.000	
						5.000			544	2001		GUARDRAIL END TREATMENT (INSTALL)	EA	5.000	
						52.000			545	2049		CRASH CUSH ATTEN (INSTL)(WORK ZONE)	EA	52.000	
						42.000			545	2050		CRASH CUSH ATTEN(MOV&RESET)(WORK ZONE)	EA	42.000	
						52.000			545	2051		CRASH CUSH ATTEN (REMOVE)(WORK ZONE)	EA	52.000	
					1	10.000			560	2015	001	MAILBOX INSTALL-S(TWW-POST)TY 4 FND-TB	EA	10.000	
						1.000			610	2042	010	INS RD IL AM (TY SA) 50T-8 (.4 KW)S	EA	1.000	

ESTIMATE & QUANTITY SHEET

1 Replaced 4/29/11 JB

DIST	COUNTY	CCSJ	SHEET
18	COLLIN	0091-04-055	33

ESTIMATE SUMMARY

EST	FINAL	EST	FINAL	EST	FINAL	CONTROL 0091-04-055 SH 289 EST	FINAL	ALT	ITEM CODE: ITEM CODE	DESC CODE	SP NO	DESCRIPTION	UNIT	TOTAL EST	FINAL
						136.000			618	2018		CONDT (PVC) (SCHD 40) (2")	LF	136.000	
						176.000			618	2022		CONDT (PVC) (SCHD 40) (3")	LF	176.000	
						800.000			618	2023		CONDT (PVC) (SCHD 40) (3") (BORE)	LF	800.000	
						26.000			618	2024		CONDT (PVC) (SCHD 40) (4")	LF	26.000	
						135.000			618	2025		CONDT (PVC) (SCHD 40) (4") (BORE)	LF	135.000	
						1273.000			620	2011	001	ELEC CONDR (NO. 8) BARE	LF	1273.000	
						1410.000			620	2012	001	ELEC CONDR (NO. 8) INSULATED	LF	1410.000	
						400.000			620	2016	001	ELEC CONDR (NO.12) INSULATED	LF	400.000	
						4.000			624	2008	014	GROUND BOX TY A (122311) W/APRON	EA	4.000	
						3.000			624	2012	014	GROUND BOX TY C (162911) W/APRON	EA	3.000	
						2.000			628	2099	003	ELC SRV TY D 120/240 070 (NS)SS(E)GC(O)	EA	2.000	
						31.000			644	2001		IN SM RD SN SUP&AM TY10BWG(1)SA(P)	EA	31.000	
						1.000			644	2004		IN SM RD SN SUP&AM TY10BWG(1)SA(T)	EA	1.000	
						1.000			644	2006		IN SM RD SN SUP&AM TY10BWG(1)SA(U)	EA	1.000	
						8.000			644	2027		IN SM RD SN SUP&AM TYS80(1)SA(U)	EA	8.000	
						1.000			644	2030		IN SM RD SN SUP&AM TYS80(1)SA(U-BM)	EA	1.000	
						52.000			644	2060		REMOVE SM RD SN SUP & AM	EA	52.000	
					1	26.000			658	2240		INSTL DEL ASSM (D-SW)SZ 1(FLX)GF2	EA	26.000	
						18.000			658	2316		INSTL OM ASSM (OM-2Z)(FLX)GND	EA	18.000	
						67118.000			662	2067		WK ZN PAV MRK REMOV (W) 4" (SLD)	LF	67118.000	
						54921.000			662	2108		WK ZN PAV MRK REMOV (Y) 4" (SLD W/MRKR)	LF	54921.000	
						10740.000			666	2003		REFL PAV MRK TY I (W) 4" (BRK)(100MIL)	LF	10740.000	
						40945.000			666	2012		REFL PAV MRK TY I (W) 4" (SLD)(100MIL)	LF	40945.000	
						6033.000			666	2036		REFL PAV MRK TY I (W) 8" (SLD)(100MIL)	LF	6033.000	
						1521.000			666	2042		REFL PAV MRK TY I (W) 12"(SLD)(100MIL)	LF	1521.000	
						313.000			666	2048		REFL PAV MRK TY I (W) 24"(SLD)(100MIL)	LF	313.000	
						36.000			666	2054		REFL PAV MRK TY I (W) (ARROW) (100MIL)	EA	36.000	
						36.000			666	2096		REFL PAV MRK TY I (W) (WORD) (100MIL)	EA	36.000	
						41921.000			666	2111		REFL PAV MRK TY I (Y) 4" (SLD)(100MIL)	LF	41921.000	
						420.000			666	2132		REFL PAV MRK TY I (Y) 24"(SLD)(100MIL)	LF	420.000	
						10740.000			666	2142		REF PAV MRK TY II (W) 4" (BRK)	LF	10740.000	
						40945.000			666	2145		REF PAV MRK TY II (W) 4" (SLD)	LF	40945.000	
						6033.000			666	2153		REF PAV MRK TY II (W) 8" (SLD)	LF	6033.000	
						1521.000			666	2155		REF PAV MRK TY II (W) 12" (SLD)	LF	1521.000	
						313.000			666	2157		REF PAV MRK TY II (W) 24" (SLD)	LF	313.000	
						36.000			666	2160		REF PAV MRK TY II (W) (ARROW)	EA	36.000	
						36.000			666	2173		REF PAV MRK TY II (W) (WORD)	EA	36.000	
						41921.000			666	2178		REF PAV MRK TY II (Y) 4" (SLD)	LF	41921.000	
						420.000			666	2185		REF PAV MRK TY II (Y) 24" (SLD)	LF	420.000	
						531.000			672	2017	034	REFL PAV MRKR TY II-C-R	EA	531.000	
						1275.000			677	2005		ELIM EXT PAV MRK & MRKS (12")	LF	1275.000	
						8705.000			677	2007		ELIM EXT PAV MRK & MRKS (24")	LF	8705.000	
						13.000			677	2008		ELIM EXT PAV MRK & MRKS (ARROW)	EA	13.000	
						8.000			677	2018		ELIM EXT PAV MRK & MRKS (WORD)	EA	8.000	
						93606.000			678	2001		PAV SURF PREP FOR MRK (4")	LF	93606.000	
						6033.000			678	2003		PAV SURF PREP FOR MRK (8")	LF	6033.000	
						1521.000			678	2004		PAV SURF PREP FOR MRK (12")	LF	1521.000	
						733.000			678	2006		PAV SURF PREP FOR MRK (24")	LF	733.000	
						36.000			678	2007		PAV SURF PREP FOR MRK (ARROW)	EA	36.000	
						36.000			678	2018		PAV SURF PREP FOR MRK (WORD)	EA	36.000	

ESTIMATE & QUANTITY SHEET

DIST	COUNTY	CCSJ	SHEET
18	COLLIN	0091-04-055	34

1 Replaced 6/29/11 JB

ESTIMATE SUMMARY

EST	FINAL	EST	FINAL	EST	FINAL	CONTROL 0091-04-055 SH 289 EST	FINAL	ALT	ITEM CODE: ITEM CODE	DESC CODE	SP NO	DESCRIPTION	UNIT	TOTAL EST	FINAL
						2.000			680	2002		INSTALL HWY TRF SIG (ISOLATED)	EA	2.000	
						2.000			681	2001	002	TEMP TRAF SIGNALS	EA	2.000	
						16.000			682	2001	001	BACK PLATE (12 IN) (3 SEC)	EA	16.000	
						4.000			682	2002	001	BACK PLATE (12 IN) (4 SEC)	EA	4.000	
						4.000			682	2003	001	BACK PLATE (12 IN) (5 SEC)	EA	4.000	
						8.000			682	2022	001	VEH SIG SEC (12 IN) LED (GRN ARW)	EA	8.000	
						24.000			682	2023	001	VEH SIG SEC (12 IN) LED (GRN)	EA	24.000	
						4.000			682	2024	001	VEH SIG SEC (12 IN) LED (YEL ARW)	EA	4.000	
						24.000			682	2025	001	VEH SIG SEC (12 IN) LED (YEL)	EA	24.000	
						24.000			682	2027	001	VEH SIG SEC (12 IN) LED (RED)	EA	24.000	
						964.000			684	2031		TRF SIG CBL (TY A) (14 AWG) (5 CONDR)	LF	964.000	
						510.000			684	2033		TRF SIG CBL (TY A) (14 AWG) (7 CONDR)	LF	510.000	
						850.000			684	2036		TRF SIG CBL (TY A) (14 AWG) (10 CONDR)	LF	850.000	
						1566.000			684	2042		TRF SIG CBL (TY A) (14 AWG) (16 CONDR)	LF	1566.000	
						1.000			686	2039		INS TRF SIG PL AM(S) 1 ARM (40')	EA	1.000	
						1.000			686	2043		INS TRF SIG PL AM(S) 1 ARM (44')	EA	1.000	
						1.000			686	2045		INS TRF SIG PL AM(S) 1 ARM (44') LUM	EA	1.000	
						1.000			686	2047		INS TRF SIG PL AM(S) 1 ARM (48')	EA	1.000	
						2.000			686	2049		INS TRF SIG PL AM(S) 1 ARM (48') LUM	EA	2.000	
						1.000			686	2061		INS TRF SIG PL AM(S) 1 ARM (60') LUM	EA	1.000	
						1.000			686	2065		INS TRF SIG PL AM(S) 1 ARM (65') LUM	EA	1.000	
						8.000			687	2001	004	PED POLE ASSEMBLY	EA	8.000	
						232.000			730	2002		FULL-WIDTH MOWING	AC	232.000	
						5452.000			5049	2001		BIODGRD EROSION CONTROL LOGS (8" DIA)	LF	5452.000	
						2.000			6006	2001		SPREAD SPECTRUM RADIO	EA	2.000	
						60.000			6006	2002		COAXIAL CABLE	LF	60.000	
						1.000			6006	2004		ANTENNA (OMNI-DIRECTIONAL)	EA	1.000	
						1.000			6006	2005		ANTENNA (UNI-DIRECTIONAL)	EA	1.000	
						2.000			6007	2001		REMOVING TRAFFIC SIGNALS	EA	2.000	
						2593.000			6266	2005	017	VIVDS COMMUNICATION CABLE (COAXIAL)	LF	2593.000	
						2.000			6834	2002		PORTABLE CHANGEABLE MESSAGE SIGN	EA	2.000	
						16.000			8206	2001		LED COUNTDOWN PED SIGNAL MOD W HOUSING	EA	16.000	
						16.000			8703	2001		ACCESSIBLE PEDESTRIAN SIGNAL UNITS	EA	16.000	

ESTIMATE & QUANTITY SHEET

⚠ Replaced 6/29/11 JB

DIST	COUNTY	CCSJ	SHEET
18	COLLIN	0091-04-055	35

201106291315353

SUMMARY OF WORKZONE TRAFFIC CONTROL ITEMS

LOCATION	472 2005	508 2002	512 2048	512 2050	512 2052	545 2049	545 2050	545 2051	662 2067	662 2108	677 2005	677 2007	677 2008	677 2018	6834 2002
	REMOV & RE-LAY PIPE (24 IN)	CONSTRUCTING DETOURS	PORT CTB (FUR & INST)(F-SHAPE)(TY 1)	PORT CTB (MOVE)(F-SHAPE) (TY 1)	PORT CTB (REMOVE)(F-SHAP E)(TY 1)	CRASH CUSH ATTEN (INSTL)(WORK ZONE)	CRASH CUSH ATTEN(MOV&RESET)(WORK ZONE)	CRASH CUSH ATTEN (REMOVE)(WORK ZONE)	WK ZN PAV MRK REMOV (W) 4" (SLD)	WK ZN PAV MRK REMOV (Y) 4" (SLD W/MRKR)	ELIM EXT PAV MRK & MRKS (12")	ELIM EXT PAV MRK & MRKS (24")	ELIM EXT PAV MRK & MRKS (ARROW)	ELIM EXT PAV MRK & MRKS (WORD)	PORTABLE CHANGEABLE MESSAGE SIGN
	LF	SY	LF	LF	LF	EA	EA	EA	LF	LF	LF	LF	EA	EA	EA
TRAFFIC CONTROL PLAN PHASE I	31		19400			52			25883	10002	1275	8705	13	8	2
TRAFFIC CONTROL PLAN PHASE II		977	330	19400	19730		42	52	41235	44919		3200	4	2	
TRAFFIC CONTROL PLAN PHASE III															
ASPHALT TRANSITION DETAIL SHEET		4573													
TRAFFIC CONTROL PLAN DETOUR A		4446													
TRAFFIC CONTROL PLAN DETOUR B		4012													
PROJECT TOTALS	**31**	**14008**	**19730**	**19400**	**19730**	**52**	**42**	**52**	**67118**	**54921**	**1275**	**8705**	**13**	**8**	**2**

SUMMARY OF REMOVAL ITEMS

LOCATION	104 2001	104 2009	104 2017	105 2061	496 2002	496 2004	496 2005	496 2006	496 2007	496 2008	542 2001	644 2060
	REMOVING CONC (PAV)	REMOVING CONC (RIPRAP)	REMOVING CONC (DRIVEWAYS)	REMOV STAB BASE & ASPH PAV (8"-20")	REMOV STR (INLET)	REMOV STR (SET)	REMOV STR (WINGWALL)	REMOV STR (HEADWALL)	REMOV STR (PIPE)	REMOV STR (BOX CULVERT)	REMOVING METAL BEAM GUARD FENCE	REMOVE SM RD SN SUP & AM
	SY	SY	SY	SY	EA	EA	EA	EA	LF	LF	LF	EA
REMOVAL LAYOUT SHEET 1		43.5	1100.29	10425.5	1	6	2	4	469	432		19
REMOVAL LAYOUT SHEET 2			455.79	10530.5		6	4		232	178		5
REMOVAL LAYOUT SHEET 3	370.5		900.44	10168.5		2			274		280	4
REMOVAL LAYOUT SHEET 4			1165.16	10621			2		46	182		9
REMOVAL LAYOUT SHEET 5			308.21	10308.5			4		196	364		5
REMOVAL LAYOUT SHEET 6				9836.5			2			172		1
REMOVAL LAYOUT SHEET 7				10587			4		180	372		5
REMOVAL LAYOUT SHEET 8	844.5		349.33	9710.5		6			219			1
REMOVAL LAYOUT SHEET 9			355.74	10055.5		2	2	2	194			1
REMOVAL LAYOUT SHEET 10			125	9826.5								
REMOVAL LAYOUT SHEET 11			833.96	9753.5			4	5	112	483		
REMOVAL LAYOUT SHEET 12			648.27	4039.5		4		2	148			2
PROJECT TOTALS	**1215**	**43.5**	**6242.19**	**115863**	**1**	**26**	**24**	**13**	**2070**	**2183**	**280**	**52**

1

SUMMARY OF EROSION CONTROL ITEMS

LOCATION	162 2002	164 2039	164 2051	168 2001	*	506 2003	506 2009	506 2016	506 2019	730 2002	5049 2001
	BLOCK SODDING	DRILL SEEDING (PERM) (URBAN) (CLAY)	DRILL SEED (TEMP)(WARM OR COOL)	VEGETATIVE WATERING	SPRINKLING (DUST CONTROL)	ROCK FILTER DAMS (INSTALL) (TY 3)	ROCK FILTER DAMS (REMOVE)	CONSTRUCTION EXITS (INSTALL) (TY 1)	CONSTRUCTION EXITS (REMOVE)	FULL-WIDTH MOWING	BIODGRD EROSION CONTROL LOGS (8" DIA)
	SY	SY	SY	MG	MG	LF	LF	SY	SY	AC	LF
SW3P LAYOUT PHASE I											
SHEET 1	30	2665	2665	155	78	75	75	140	140	3	173
SHEET 2	0	7338	7338	425	212	0	0	0	0	8	189
SHEET 3	30	5658	5658	328	165	90	90	0	0	6	235
SHEET 4	0	4510	4510	261	130	0	0	0	0	5	189
SHEET 5	50	9775	9775	567	284	105	105	0	0	10	197
SHEET 6	25	7919	7919	459	230	75	75	0	0	8	189
SHEET 7	0	6275	6275	363	182	0	0	0	0	6	126
SHEET 8	45	6212	6212	361	181	125	125	0	0	6	168
SHEET 9	25	7095	7095	411	206	90	90	0	0	7	147
SHEET 10	0	8136	8136	471	235	0	0	0	0	8	168
SHEET 11	65	7702	7702	447	225	195	195	0	0	8	168
SHEET 12	0	2433	2433	141	70	0	0	85	85	3	63
SW3P LAYOUT PHASE II											
SHEET 1	40	5331	5331	310	155	110	110	257	257	6	241
SHEET 2	0	10100	10100	584	292	0	0	0	0	10	480
SHEET 3	25	12542	12542	726	364	90	90	0	0	13	538
SHEET 4	0	16351	16351	946	473	0	0	0	0	17	465
SHEET 5	50	12983	12983	753	377	100	100	0	0	13	259
SHEET 6	20	14377	14377	832	416	90	90	0	0	15	220
SHEET 7	0	12323	12323	713	356	0	0	0	0	13	289
SHEET 8	37	14451	14451	837	419	80	80	0	0	15	231
SHEET 9	21	15005	15005	869	435	85	85	0	0	16	277
SHEET 10	0	16981	16981	982	491	0	0	0	0	18	230
SHEET 11	52	13433	13433	779	390	185	185	0	0	14	147
SHEET 12	0	3589	3589	208	104	0	0	107	107	4	63
PROJECT TOTALS	**515**	**223184**	**223184**	**12928.00**	**6470 ***	**1495**	**1495**	**589**	**589**	**232**	**5452**

* FOR CONTRACTOR'S INFORMATION ONLY

1 Replaced 6/29/11 JB

Texas Department of Transportation
© 2011

SH 289 ROADWAY SUMMARY SHEETS

SHEET 1 OF 8

DESIGN	FED. RD. DIV. NO.	STATE PROJECT NO.		HIGHWAY NO.
AMW	6	(SEE TITLE SHEET)		SH 289
GRAPHICS AMW	STATE	DISTRICT	COUNTY	SHEET NO.
CHECK NVS	TEXAS	DALLAS	COLLIN	37
CHECK NVS	CONTROL 0091	SECTION 04	JOB 055	

SUMMARY OF PAVEMENT MARKING ITEMS

LOCATION	666 2003	666 2012	666 2036	666 2042	666 2048	666 2054	666 2096	666 2111	666 2132	666 2142	666 2145	666 2153
	REFL PAV MRK TY I (W) 4" (BRK) (100MIL)	REFL PAV MRK TY I (W) 4" (SLD) (100MIL)	REFL PAV MRK TY I (W) 8" (SLD) (100MIL)	REFL PAV MRK TY I (W) 12" (SLD) (100MIL)	REFL PAV MRK TY I (W) 24" (SLD) (100MIL)	REFL PAV MRK TY I (W) (ARROW) (100MIL)	REFL PAV MRK TY I (W) (WORD) (100MIL)	REFL PAV MRK TY I (Y) 4" (SLD) (100MIL)	REFL PAV MRK TY I (Y) 24" (SLD) (100MIL)	REF PAV MRK TY II (W) 4" (BRK)	REF PAV MRK TY II (W) 4" (SLD)	REF PAV MRK TY II (W) 8" (SLD)
	LF	LF	LF	LF	LF	EA	EA	LF	LF	LF	LF	LF
PAVEMENT MARKING SHEET 1	840	3485	1139	887	165	8	8	3367	0	840	3485	1139
PAVEMENT MARKING SHEET 2	940	3735	656	0	0	4	4	3539	0	940	3735	656
PAVEMENT MARKING SHEET 3	960	3573	624	0	0	4	4	3521	0	960	3573	624
PAVEMENT MARKING SHEET 4	1000	3560	589	0	0	2	2	3452	0	1000	3560	589
PAVEMENT MARKING SHEET 5	910	3404	319	0	0	2	2	3623	0	910	3404	319
PAVEMENT MARKING SHEET 6	940	3668	132	0	0	1	1	3800	0	940	3668	132
PAVEMENT MARKING SHEET 7	920	3888	649	634	148	3	3	3705	0	920	3888	649
PAVEMENT MARKING SHEET 8	960	3443	624	0	0	4	4	3554	0	960	3443	624
PAVEMENT MARKING SHEET 9	940	3677	337	0	0	2	2	3597	0	940	3677	337
PAVEMENT MARKING SHEET 10	960	3757	312	0	0	2	2	3725	0	960	3757	312
PAVEMENT MARKING SHEET 11	940	3355	652	0	0	4	4	3638	0	940	3355	652
PAVEMENT MARKING SHEET 12	430	1400	0	0	0	0	0	2400	420	430	1400	0
PROJECT TOTALS	**10740**	**40945**	**6033**	**1521**	**313**	**36**	**36**	**41921**	**420**	**10740**	**40945**	**6033**

SUMMARY OF PAVEMENT MARKING ITEMS

LOCATION	666 2155	666 2157	666 2160	666 2173	666 2178	666 2185	672 2017	678 2001	678 2003	678 2004	678 2006	678 2007	678 2018
	REF PAV MRK TY II (W) 12" (SLD)	REF PAV MRK TY II (W) 24" (SLD)	REF PAV MRK TY II (W) (ARROW)	REF PAV MRK TY II (W) (WORD)	REF PAV MRK TY II (Y) 4" (SLD)	REF PAV MRK TY II (Y) 24" (SLD)	REFL PAV MRKR TY II-C-R	PAV SURF PREP FOR MRK (4")	PAV SURF PREP FOR MRK (8")	PAV SURF PREP FOR MRK (12")	PAV SURF PREP FOR MRK (24")	PAV SURF PREP FOR MRK (ARROW)	PAV SURF PREP FOR MRK (WORD)
	LF	LF	EA	EA	LF	LF	EA	LF	LF	LF	LF	EA	EA
PAVEMENT MARKING SHEET 1	887	165	8	8	3367	0	40	7692	1139	887	165	8	8
PAVEMENT MARKING SHEET 2	0	0	4	4	3539	0	48	8214	656	0	0	4	4
PAVEMENT MARKING SHEET 3	0	0	4	4	3521	0	47	8054	624	0	0	4	4
PAVEMENT MARKING SHEET 4	0	0	2	2	3452	0	50	8012	589	0	0	2	2
PAVEMENT MARKING SHEET 5	0	0	2	2	3623	0	44	7937	319	0	0	2	2
PAVEMENT MARKING SHEET 6	0	0	1	1	3800	0	48	8408	132	0	0	1	1
PAVEMENT MARKING SHEET 7	634	148	3	3	3705	0	44	8513	649	634	148	3	3
PAVEMENT MARKING SHEET 8	0	0	4	4	3554	0	48	7957	624	0	0	4	4
PAVEMENT MARKING SHEET 9	0	0	2	2	3597	0	48	8214	337	0	0	2	2
PAVEMENT MARKING SHEET 10	0	0	2	2	3725	0	46	8442	312	0	0	2	2
PAVEMENT MARKING SHEET 11	0	0	4	4	3638	0	48	7933	652	0	0	4	4
PAVEMENT MARKING SHEET 12	0	0	0	0	2400	420	20	4230	0	0	420	0	0
PROJECT TOTALS	**1521**	**313**	**36**	**36**	**41921**	**420**	**531**	**93606**	**6033**	**1521**	**733**	**36**	**36**

SUMMARY OF SIGNING ITEMS

LOCATION	644 2001	644 2004	644 2006	644 2027	644 2030	658 2316
	INS SM RD SN SUP&AM TY 10BWG(1) SA(P)	INS SM RD SN SUP&AM TY 10BWG(1) SA(T)	INS SM RD SN SUP&AM TY 10BWG(1) SA(U)	INS SM RD SN SUP&AM TY S80(1) SA(U)	INS SM RD SN SUP&AM TY S80(1) SA(U-BM)	INSTL OM ASSM (OM-2Z)(FLX)GND
	EA	EA	EA	EA	EA	EA
PROJECT TOTALS	**31**	**1**	**1**	**8**	**1**	**18**

SUMMARY OF MISC ITEMS

	560 2015
1	MAILBOX INSTALL-S(TWW-POST)TY 4 FND-TB
	EA
PROJECT TOTALS	10

1 Replaced 6/29/11 JB

SUMMARY OF RAIL AND MBGF ITEMS

LOCATION	432 2039	450 2071	540 2001	540 2012	540 2036	540 2037	544 2001	658 2240
	RIPRAP (MOW STRIP)(4 IN)	RAIL (TY C402)	MTL W-BEAM GD FEN (TIM POST)	MTL BEAM GD FEN TRANS (TL2)	DRIVEWAY TERMINAL ANCHOR SECTION	MTL W - BEAM GD FEN(CRT POST)(SHRT RAD)	GUARDRAIL END TREATMENT (INSTALL)	INSTL DEL ASSM (D-SW)SZ 1(FLX)GF2
	CY	LF	LF	EA	EA	LF	EA	EA
DOE BRANCH	5.2	147	14	2	1	22	1	6
DOE BRANCH TRIB H	6.2	103	70	2	2	34		6
DOE BRANCH TRIB G	6.5	240	25	2			2	6
DOE BRANCH UNNAMED TRIB 2	9.6		775				2	8
PROJECT TOTALS	**27.5**	**490**	**884**	**6**	**3**	**56**	**5**	**26**

1

Texas Department of Transportation
© 2011

SH 289 ROADWAY SUMMARY SHEETS

SHEET 2 OF 8

DESIGN	FED. RD. DIV. NO.	STATE PROJECT NO.		HIGHWAY NO.
AMW	6	(SEE TITLE SHEET)		SH 289
GRAPHICS AMW	STATE	DISTRICT	COUNTY	SHEET NO.
CHECK NVS	TEXAS	DALLAS	COLLIN	38
CHECK NVS	CONTROL 0091	SECTION 04	JOB 055	

T:\DALDGN*A\SH 289 Collin\THE PLANS\Summary Sheets\ashton*summaries.dgn

SH 289

PLAN & PROFILE SHEET RANGE	FROM STA	TO STA	FT	*EXCAV RDWY END AREA SF AVG	*EMBK DC TY C END AREA SF AVG	BACKFILL *EMBK DC TY C END AREA SF AVG	ITEM 100-2002 PREPARING ROW STA	** ITEM 110-2001 EXCAV RDWY CY △1	** ITEM 132-2006 BKFILL EMBK (FINAL) (DENS CONT) (TY C) CY	** ITEM 132-2006 EMBK (FINAL) (DENS CONT) (TY C) CY △1
1	303+05.00	313+00.00	995	255.85	10.90	10.92	9.95	8,267.70	402.42	401.69
2	313+00.00	324+00.00	1,100.00	245.2	18.40	9.92	11.00	9,238.48	404.15	1,176.08
3	324+00.00	335+00.00	1,100.00	212.6	39.45	9.54	11.00	7,568.37	388.67	1,696.82
4	335+00.00	346+00.00	1,100.00	212.45	99.15	9.54	11.00	7,097.11	388.67	4,039.44
5	346+00.00	357+00.00	1,100.00	139.8	75.85	8.16	11.00	4,379.48	332.44	3,411.31
6	357+00.00	368+00.00	1,100.00	66.15	21.90	8.16	11.00	1,842.39	332.44	1,086.28
7	368+00.00	379+00.00	1,100.00	67.8	72.40	6.81	11.00	2,006.33	277.24	3,393.00
8	379+00.00	390+00.00	1,100.00	41.25	74.10	5.42	11.00	1,620.93	220.61	4,184.11
9	390+00.00	401+00.00	1,100.00	37.75	148.15	4.08	11.00	1,528.15	166.02	7,495.07
10	401+00.00	412+00.00	1,100.00	38.05	158.95	4.08	11.00	412.73	166.02	6,475.74
11	412+00.00	423+00.00	1,100.00	62.1	51.45	5.38	11.00	1,416.28	219.19	2,096.11
12	423+00.00	434+00.00	1,100.00	37.1	227.45	5.38	11.00	1,324.31	219.19	10,146.07
13	434+00.00	445+00.00	1,100.00	56.05	217.80	4.05	11.00	2,229.09	165.00	10,358.93
14	445+00.00	456+00.00	1,100.00	73.35	29.10	4.05	11.00	2,951.30	165.00	2,518.44
15	456+00.00	467+00.00	1,100.00	50.15	30.60	6.77	11.00	785.42	275.81	2,427.76
16	467+00.00	478+00.00	1,100.00	52.15	36.00	8.16	11.00	726.56	332.44	2,777.26
17	478+00.00	489+00.00	1,100.00	44.2	88.35	6.77	11.00	968.39	275.81	6,214.74
18	489+00.00	500+00.00	1,100.00	28.05	187.15	4.05	11.00	554.65	165.00	9,390.93
19	500+00.00	511+00.00	1,100.00	192.75	134.50	6.82	11.00	4,770.11	277.85	6,025.46
20	511+00.00	519+00.00	800	244.15	90.75	5.46	8.00	6,130.31	161.78	3,225.43
						TOTALS	216	65,818.09	5,335.76	88,540.68

*FOR CONTRACTORS INFORMATION ONLY

**NOT SUMMARIZED HERE ALSO SEE ROADWAY SUMMARY SHEETS FOR INTERSECTIONS

△1 Replaced 6/29/11 JB

Texas Department of Transportation
© 2011

SH 289
ROADWAY SUMMARY SHEET
EARTHWORK

SHEET 3 OF 8

DESIGN	FED.RD. DIV.NO.	STATE PROJECT NO.		HIGHWAY NO.
NVS	6	(SEE TITLE SHEET)		SH 289
GRAPHICS NVS	STATE	DISTRICT	COUNTY	SHEET NO.
CHECK	TEXAS	DALLAS	COLLIN	39
	CONTROL	SECTION	JOB	
CHECK	0091	04	055	

6/24/11 12:35 PM

R-201104-01

LOCATION FROM STA	LOCATION TO STA	LENGTH FT	*FLEX BASE END AREA SF AVG	*FLEX BASE END AREA W AVG	*LIME END AREA W AVG	*HMAC END AREA W AVG	*CONC. W AVG	*FLEX BASE SY	** ITEM 247-2053 FL BS (CMP IN PLACE) (TY D GR1) (FNAL POS) CY	** ITEM 260-2002 LIME (HYDRATED LIME) (SLURRY) TON	** ITEM 260-2027 LIME TREAT (EXST MATL) (8") SY	** ITEM 310-2005 PRIME COAT (MC - 30 OR AEP) GAL	** ITEM 340-2011 D-GR HMA (METH) TY-B PG64-22 TONS	** ITEM 360-2001 CONC. PVMT. (CONT REINF CRCP) (8") SY	** ITEM 360-2018 CURB (TY II) LF
303+05.00	313+00.00	995.00	--	--	62.46	62.52	56.70	--	--	115.15	6905.57	--	1520.74	6268.50	4340
313+00.00	324+00.00	1100.00	--	--	62.52	62.50	56.70	--	--	76.42	7641.92	--	1680.45	6930.00	4367
324+00.00	335+00.00	1100.00	--	--	62.90	62.59	56.70	--	--	76.88	7687.68	--	1682.90	6930.00	4378
335+00.00	346+00.00	1100.00	45.20	63.02	62.77	62.50	56.70	7702.93	1339.26	--	7672.43	1534.49	1680.64	6930.00	3980
346+00.00	357+00.00	1100.00	45.20	63.09	62.60	62.47	56.70	7710.56	1841.48	--	--	1540.59	1679.71	6930.00	4356
357+00.00	368+00.00	1100.00	41.40	63.34	62.48	62.46	56.70	7741.07	1455.31	--	--	1333.89	1450.50	5888.89	4323
368+00.00	379+00.00	1100.00	45.20	62.40	62.52	62.54	56.70	7626.67	1841.48	--	--	1548.21	1681.56	6930.00	4170
379+00.00	390+00.00	1100.00	45.20	63.52	62.48	62.40	56.70	7763.95	1841.48	--	--	1525.33	1677.87	6930.00	3936
390+00.00	401+00.00	1100.00	45.20	62.40	62.51	62.47	56.70	7626.67	1841.48	--	--	1552.79	1679.71	6930.00	4290
401+00.00	412+00.00	1100.00	41.40	62.84	62.47	62.47	56.70	7680.05	1686.67	--	--	1525.33	1679.88	6930.00	4400
412+00.00	423+00.00	1100.00	44.95	62.40	62.54	62.47	56.70	7626.67	1831.30	--	--	1536.01	1679.86	6930.00	4144
423+00.00	434+00.00	1100.00	44.95	62.46	62.47	62.52	56.70	7634.29	1831.30	--	--	1525.33	1681.22	6930.00	4400
434+00.00	445+00.00	1100.00	41.40	62.65	62.59	62.47	56.70	7657.17	1004.33	--	--	--	1679.70	6930.00	4302
445+00.00	456+00.00	1100.00	--	--	62.71	62.54	56.70	--	--	76.65	7664.80	--	1681.61	6930.00	4010
456+00.00	467+00.00	1100.00	--	--	62.49	62.52	56.70	--	--	76.38	7638.11	--	1681.22	6930.00	4400
467+00.00	478+00.00	1100.00	--	--	62.50	62.51	56.70	--	--	76.39	7639.40	--	1680.89	6930.00	4056
478+00.00	489+00.00	1100.00	--	--	62.46	62.47	56.70	--	--	76.34	7634.29	--	1679.88	6930.00	4400
489+00.00	500+00.00	1100.00	--	--	62.52	62.46	56.70	--	--	54.12	6805.66	--	1495.62	6093.89	4236
500+00.00	511+00.00	1100.00	--	--	62.49	62.52	56.70	--	--	38.46	6215.55	--	1368.33	5507.78	4612
511+00.00	519+00.00	800.00	--	--	63.24	62.46	56.70	--	--	56.21	5621.16	--	1221.36	5040.00	2710
							PROJECT TOTALS		16,514.10	723.00	79,126.60	13,621.98	32,263.70	132,749.10	83,810

*FOR CONTRACTORS INFORMATION ONLY

**NOT SUMMARIZED HERE ALSO SEE ROADWAY SUMMARY SHEETS FOR INTERSECTIONS

Texas Department of Transportation

© 2011

SH 289
ROADWAY SUMMARY SHEET
PAVEMENT

SHEET 4 OF 8

DESIGN	FED.RD. DIV.NO.	STATE PROJECT NO.		HIGHWAY NO.
NVS	6	(SEE TITLE SHEET)		SH 289
GRAPHICS NVS	STATE	DISTRICT	COUNTY	SHEET NO.
CHECK	TEXAS	DALLAS	COLLIN	40
	CONTROL	SECTION	JOB	
CHECK	0091	04	055	

5/26/11 7:17 AM

PLAN & PROFILE SHEET NO.	LOCATION FROM STA	LOCATION TO STA	LENGTH FT	** ITEM 247-2053 FL BS (CMP IN PLACE) (TY D GR1) (FNAL POS) CY	** ITEM 260-2002 LIME (HYDRATED LIME) (SLURRY) TON	** ITEM 260-2027 LIME TREAT (EXST MATL) (8") SY	** ITEM 310-2005 PRIME COAT (MC - 30 OR AEP) GAL	** ITEM 340-2011 D-GR HMA (METH) TY-B PG64-22 TONS	** ITEM 360-2001 CONC. PVMT. (CONT REINF CRCP) (8") SY	** ITEM 360-2018 CURB (TY II) LF
1	303+05.00	313+00.00	995.00	--	162.05	8409.24	--	1825.65	7180.70	4340
2	313+00.00	324+00.00	1100.00	--	174.33	9145.59	--	1985.36	7842.20	4367
3	324+00.00	335+00.00	1100.00	--	175.09	9191.35	--	1987.81	7842.20	4378
4	335+00.00	346+00.00	1100.00	1445.60	--	9176.10	1835.22	1985.54	7842.20	3980
5	346+00.00	357+00.00	1100.00	1947.82	--	--	1540.59	1984.62	7842.20	4356
6	357+00.00	368+00.00	1100.00	1561.65	--	--	1333.89	1755.41	6801.09	4323
7	368+00.00	379+00.00	1100.00	1947.82	--	--	1548.21	1986.46	7842.20	4170
8	379+00.00	390+00.00	1100.00	1947.82	--	--	1525.33	1982.77	7842.20	3936
9	390+00.00	401+00.00	1100.00	1947.82	--	--	1552.79	1984.62	7842.20	4290
10	401+00.00	412+00.00	1100.00	1793.01	--	--	1525.33	1984.79	7842.20	4400
11	412+00.00	423+00.00	1100.00	1937.64	--	--	1536.01	1984.77	7842.20	4144
12	423+00.00	434+00.00	1100.00	1937.64	--	--	1525.33	1986.13	7842.20	4400
13	434+00.00	445+00.00	1100.00	1110.67	--	--	--	1984.60	7842.20	4302
14	445+00.00	456+00.00	1100.00	--	174.71	9168.47	--	1986.52	7842.20	4010
15	456+00.00	467+00.00	1100.00	--	174.27	9141.78	--	1986.13	7842.20	4400
16	467+00.00	478+00.00	1100.00	--	174.29	9143.07	--	1985.79	7842.20	4056
17	478+00.00	489+00.00	1100.00	--	174.20	9137.96	--	1984.79	7842.20	4400
18	489+00.00	500+00.00	1100.00	--	118.74	8309.33	--	1800.53	7006.09	4236
19	500+00.00	511+00.00	1100.00	--	126.85	7719.22	--	1673.24	6419.98	4612
20	511+00.00	519+00.00	800.00	--	140.64	7124.83	--	1526.27	5952.20	2710
	PROJECT TOTALS			17,577.50	1,595.20	95,666.90	13,922.71	38,361.80	150,993.10	83,810

*FOR CONTRACTORS INFORMATION ONLY

**NOT SUMMARIZED HERE ALSO SEE ROADWAY SUMMARY SHEETS FOR INTERSECTIONS

3 Replaced 7/6/11 JB

Texas Department of Transportation
© 2011

SH 289
ROADWAY SUMMARY SHEET
PAVEMENT

SHEET 4 OF 8

DESIGN	FED.RD. DIV.NO.	STATE PROJECT NO.		HIGHWAY NO.
NVS	6	(SEE TITLE SHEET)		SH 289
GRAPHICS NVS	STATE	DISTRICT	COUNTY	SHEET NO.
CHECK	TEXAS	DALLAS	COLLIN	40
	CONTROL	SECTION	JOB	
CHECK	0091	04	055	

7/6/11 4:48 PM

R-201104-01

LOCATION	STA	** ITEM 110-2001 EXCAV RDWY CY	** ITEM 132-2006 EMBK (FINAL) (DENS CONT) (TY C) CY	** ITEM 247-2053 FL BS (CMP IN PLACE) (TY D GR1) (FNAL POS) CY	** ITEM 260-2002 LIME (HYDRATED LIME) (SLURRY) TON	** ITEM 260-2027 LIME TREAT (EXST MATL) (8") SY	** ITEM 310-2005 PRIME COAT (MC - 30 OR AEP) GAL	** ITEM 340-2011 D-GR HMA (METH) TY-B PG64-22 TON	** ITEM 360-2001 CONC. PVMT. (CONT REINF CRCP) (8") SY	** ITEM 360-2018 CURB (TYPE II) LF
SH 289 AT CR 83	472+37.67	318.83						271.85	318.22	155
SH 289 AT CARTER RANCH	445+37.99	857.62						496.27	847.71	186
SH 289 AT CR 88	419+08.11	381.76		146.17				146.17	381.13	188
SH 289 AT CR 53	419+00.62		397.81	153.30				153.30	412.26	189
SH 289 AT CR 89 (HARPER SMITH RD)	378+12.19	42.23	288.69					312.88	365.25	187
SH 289 AT CR 55	378+10.03		447.34					376.85	423.55	185
SH 289 AT BUS 289	373+00.17	970.69						338.60	521.47	153
SH 289 AT CR 91	344+22.03	638.14						338.49	419.56	155
SH 289 AT E ASH ST	325+06.19	51.18	89.46					376.63	412.12	187
SH 289 AT E ELM ST	317+08.22	1,002.68						346.64	375.71	154
SH 289 AT CR 98	316+38.16	4,296.20						451.76	895.96	187
SH 289 AT E PECAN ST	305+19.64	1,256.62			14.53	871.42	174.28	304.36	871.42	423
SH 289 AT FM 455		1,979.96			12.33	739.19	147.84	284.39	739.19	
	TOTALS	11,795.92	1,223.30	299.47	26.86	1,610.61	322.12	4,198.21	6,983.56	2,349.00

CROSS STREET	PHASE	STAGE	MAIN LANE CONSTRUCTION	*ITEM 530-2056 INTERSECTIONS (CONC) (HES) SY
FM 455./PECAN ST.	I	I-A	SB	787
FM 455./PECAN ST.	I	I-B	SB	1,267
FM 455./PECAN ST.	II	II-A	NB	1,002
FM 455./PECAN ST.	II	II-B	NB	504
CR 53 / CR 88	I	I-A	SB	481
CR 53 / CR 88	I	I-B	SB	308
CR 53 / CR 88	I	I-C	SB	127
CR 53 / CR 88	II	II-A	NB	685
CR 53 / CR 88	II	II-B	NB	732
			TOTALS	5,893

*SEE TRAFFIC CONTROL DETAIL INTERSECTIONS AT MAJOR CROSS STREETS

**NOT SUMMARIZED HERE ALSO SEE ROADWAY SUMMARY SHEETS

3 Replaced 7/6/11 JB

Texas Department of Transportation

© 2011

SH 289
ROADWAY SUMMARY SHEET
INTERSECTIONS

SHEET 5 OF 8

DESIGN NVS/HJL	FED.RD. DIV.NO.	STATE PROJECT NO.		HIGHWAY NO.
GRAPHICS NVS/HJL	6	(SEE TITLE SHEET)		SH 289
	STATE	DISTRICT	COUNTY	SHEET NO.
CHECK	TEXAS	DALLAS	COLLIN	41
	CONTROL	SECTION	JOB	
CHECK	0091	04	055	

7/6/11 4:48 PM

R-201104-01

RIPRAP SUMMARY

RIPRAP DETAIL SHEET NO.	LOCATION	ITEM 432-2001 RIPRAP (CONC) 4" CY
1	LOCATION #1 PROPOSED SH 289 RIPRAP STA 351+05 TO STA 352+29.81	12
1	LOCATION #2 PROPOSED SH 289 RIPRAP STA 351+05 TO STA 352+29.81	6
1	LOCATION #2A PROPOSED SH 289 RIPRAP	2
1	LOCATION #2B PROPOSED SH 289 RIPRAP	3
2	LOCATION #3 PROPOSED SH 289 RIPRAP STA 391+66.78 TO STA 391+83.26	2
2	LOCATION #4 PROPOSED SH 289 RIPRAP STA 419+74.12 TO STA 425+05	29
	TOTAL	54

SIDEWALK SUMMARY

SH 289 PLAN AND PROFILE SHEET NO.	LOCATION	ITEM 531-2015 CONC. SIDEWALKS (4") SY
1	LOCATION #1 PROPOSED SH 289 STA 303+05 TO STA 305+20	122
11	STA 419+47.79 TO STA 419+54.04	4
	TOTAL	126

CURB RAMPS SUMMARY

ITEM 531-2010 CURB RAMPS (TY 7) EA	ITEM 531-2012 CURB RAMPS (TY 9) EA	ITEM 531-2017 CURB RAMPS (TY 21) EA
10	24	4

ROW MARKERS SUMMARY

*ITEM 538-2001 RIGHT OF WAY MARKERS EA
34

*NOTES
1. SEE PROJECT LAYOUT FOR LOCATION AND M-10 STANDARD
2. ALSO SEE SURVEY CONTROL SHEETS

Texas Department of Transportation

© 2011

SH 289
MISCELLANEOUS
SUMMARY SHEET

SHEET 7 OF 8

DESIGN	FED.RD. DIV.NO.	FEDERAL AID PROJECT NO.		HIGHWAY NO.
NVS	6	(SEE TITLE SHEET)		SH 289
GRAPHICS	STATE	DISTRICT	COUNTY	SHEET NO.
NVS	TEXAS	DALLAS	COLLIN	43
CHECK	CONTROL	SECTION	JOB	
CHECK	0091	04	055	

5/15/11 9:14 AM

R-201104-01

MEDIAN OPENING SUMMARY

PLAN & PROFILE SHEET NO.	LOCATION STA	ITEM 110-2001 EXCAV RDWY CY	ITEM 132-2006 EMBK (FINAL) (DENS CONT) (TY C) CY	ITEM 247-2053 FL BS (CMP IN PLACE) (TY D GR1) (FNAL POS) CY	ITEM 260-2002 LIME (HYDRATED LIME) (SLURRY) TON	ITEM 260-2027 LIME TREAT (EXST MATL) (8") SY	ITEM 310-2005 PRIME COAT (MC - 30 OR AEP) GAL	ITEM 340-2011 D-GR HMA (METH) TY-B PG64-22 TONS	ITEM 360-2001 CONC. PVMT. (CONT REINF CRCP) (8") SY
6	360+00.00	347.04	173.52	231.36	--	--	208.22	229.04	1041.11
18	499+00.00	278.70	139.35	--	13.94	836.11	--	183.94	836.11
19	510+00.00	474.07	237.04	--	23.70	1422.22	--	312.89	1422.22
	PROJECT TOTALS	1,099.81	549.90	231.40	37.60	2,258.30	208.22	725.90	3,299.40

Texas Department of Transportation

© 2011

CITY OF CELINA
MEDIAN OPENINGS
SUMMARY SHEET

SHEET 8 OF 8

DESIGN	FED.RD. DIV.NO.	FEDERAL AID PROJECT NO.		HIGHWAY NO.
NVS	6	(SEE TITLE SHEET)		SH 289
GRAPHICS NVS	STATE	DISTRICT	COUNTY	SHEET NO.
CHECK	TEXAS	DALLAS	COLLIN	44
	CONTROL	SECTION	JOB	
CHECK	0091	04	055	

4/11/11 12:45 PM

6/24/2011 12:27:13 PM

SUMMARY OF CULVERT DRAINAGE ITEMS

LOCATION	*	*	402 2001	403 2001	459 2012	462 2010	462 2011	462 2019	462 2021
	STRUCT EXCAV	STRUCT EXCAV (BOX)	TRENCH EXCAVATION PROTECTION	TEMPORARY SPL SHORING	GABION MATTRESSES (GALV) (18 IN)	CONC BOX CULV (6 FT X 3 FT)	CONC BOX CULV (6 FT X 4 FT)	CONC BOX CULV (8 FT X 4 FT)	CONC BOX CULV (8 FT X 6 FT)
	CY	CY	LF	SF	SY	LF	LF	LF	LF
CULVERT 2	218	399		1462	41				224
CULVERT 3	32	570	120						
CULVERT 4	124	106	130		15	158			
CULVERT 6	42	266		649	52			224	
CULVERT 8	559	282		1322	70		317		
CULVERT 9	380	347		1056	94			292	
CULVERT DRAINAGE TOTALS	**1355 ***	**1970 ***	**250**	**4489**	**272**	**158**	**317**	**516**	**224**

SUMMARY OF CULVERT DRAINAGE ITEMS

LOCATION	462 2024	466 2007	466 2009	466 2010	466 2021	466 2050	466 2051	466 2052	466 2054	466 2055
	CONC BOX CULV (9 FT X 5 FT)	WINGWALL (SW-0) (HW=5 FT)	WINGWALL (SW-0) (HW=7 FT)	WINGWALL (SW-0) (HW=8 FT)	WINGWALL (FW-0) (HW=5 FT)	WINGWALL (PW) (HW=6 FT)	WINGWALL (PW) (HW=7 FT)	WINGWALL (PW) (HW=8 FT)	WINGWALL (PW) (HW=10 FT)	WINGWALL (PW) (HW=11 FT)
	LF	EA	EA	EA	EA	EA	EA	EA	EA	EA
CULVERT 2									1	1
CULVERT 3	342		1	1						
CULVERT 4		1			1					
CULVERT 6								2		
CULVERT 8							1	1		
CULVERT 9						1			1	
CULVERT DRAINAGE TOTALS	**342**	**1**	**1**	**1**	**1**	**1**	**1**	**3**	**2**	**1**

* FOR CONTRACTOR'S INFORMATION ONLY

△1 Replaced 6/29/11 JB

Texas Department of Transportation
© 2011

SH 289 DRAINAGE SUMMARY SHEET

SMALL STRUCTURE SUMMARY

SHEET 1 OF 13

DESIGN	FED. RD. DIV. NO.	STATE PROJECT NO.		HIGHWAY NO.
AMW	6	(SEE TITLE SHEET)		SH 289
GRAPHICS AMW	STATE	DISTRICT	COUNTY	SHEET NO.
CHECK NVS	TEXAS	DALLAS	COLLIN	45
CHECK NVS	CONTROL 0091	SECTION 04	JOB 055	

T:\DALDGN*A\SH 289 Collin\THE PLANS\Summary Sheets\drainagesummarysheets.dgn

R-201104-01

SUMMARY OF DOE BRANCH ITEMS							
	*	*	403 2001	459 2012	462 2027	466 2043	466 2055
	STRUCT EXCAV	STRUCT EXCAV (BOX)	TEMPORARY SPL SHORING	GABION MATTRESSES (GALV) (18 IN)	CONC BOX CULV (9 FT X 8 FT)	WINGWALL (FW-S) (HW=13 FT)	WINGWALL (PW) (HW=11 FT)
	CY	CY	SF	SY	LF	EA	EA
DOE BRANCH TOTALS	**314 ***	**1030 ***	**1175**	**425**	**387**	**1**	**1**

SUMMARY OF DOE BRANCH TRIBUTARY H ITEMS							
	*	*	403 2001	459 2012	462 2020	466 2026	466 2054
	STRUCT EXCAV	STRUCT EXCAV (BOX)	TEMPORARY SPL SHORING	GABION MATTRESSES (GALV) (18 IN)	CONC BOX CULV (8 FT X 5 FT)	WINGWALL (FW-O) (HW=10 FT)	WINGWALL (PW) (HW=10 FT)
	CY	CY	SF	SY	LF	EA	EA
DOE BRANCH TRIB. H TOTALS	**73 ***	**498 ***	**1178**	**159**	**336**	**1**	**1**

SUMMARY OF DOE BRANCH TRIBUTARY G ITEMS						
	*	*	403 2001	459 2012	462 2029	466 2055
	STRUCT EXCAV	STRUCT EXCAV (BOX)	TEMPORARY SPL SHORING	GABION MATTRESSES (GALV) (18 IN)	CONC BOX CULV (10 FT X 5 FT)	WINGWALL (PW) (HW=11 FT)
	CY	CY	SF	SY	LF	EA
DOE BRANCH TRIB. G TOTALS	**124 ***	**623 ***	**1523**	**316**	**336**	**2**

SUMMARY OF DOE BRANCH UNNAMED TRIBUTARY 2 ITEMS							
	*	*	403 2001	459 2012	462 2062	466 2054	466 2056
	STRUCT EXCAV	STRUCT EXCAV (BOX)	TEMPORARY SPL SHORING	GABION MATTRESSES (GALV) (18 IN)	CONC BOX CULV (12 FT X 6 FT)	WINGWALL (PW) (HW=10 FT)	WINGWALL (PW) (HW=12 FT)
	CY	CY	SF	SY	LF	EA	EA
DOE BRANCH UNNAMED TRIB. 2 TOTALS	**281 ***	**952 ***	**1852**	**447**	**357**	**1**	**1**

* FOR CONTRACTOR'S INFORMATION ONLY

△1 Replaced 4/29/11 JB

Texas Department of Transportation
© 2011

SH 289 DRAINAGE SUMMARY SHEET

BRIDGE SUMMARY

SHEET 2 OF 13

DESIGN	FED. RD. DIV. NO.	STATE PROJECT NO.		HIGHWAY NO.
AMW	6	(SEE TITLE SHEET)		SH 289
GRAPHICS AMW	STATE	DISTRICT	COUNTY	SHEET NO.
CHECK NVS	TEXAS	DALLAS	COLLIN	46
CHECK NVS	CONTROL 0091	SECTION 04	JOB 055	

R-201104-01

T:\DALDGN*A\SH 289 Celina\THE PLANS\Summary Sheets\drainagesummarysheets.dgn

SUMMARY OF INLET ITEMS

NW ID	INLET ID	INLET LOCATION					L (FT)	W (FT)	HT (FT)	CURB INLET 465 2115 INLET (COMPL) TY-I MOD (EA)	CURB INLET 465 2221 INLET EXT TY-I (EA)	CURB INLET RING & COVER (EA)*	DROP INLET 465 2507 INLET (COMPL) (DROP) (TY-C) (1-GRATE) (EA)	DROP INLET 465 2508 INLET (COMPL) (DROP) (TY-C) (2-GRATE) (EA)	DROP INLET 465 2500 INLET (COMPL) (DROP) (TY-C) (3-GRATE) (EA)
NBB	CI-NBB1	59	FT	L	289PRO	308+00.00	15	4.5	6.465	1	2	1	0	0	0
	CI-NBB2	59	FT	L	289PRO	306+00.00	15	4.5	8.333	1	2	1	0	0	0
	GI-NBB1	77	FT	L	289PRO	305+28.32			7.227	0	0		1	0	0
	GI-NBB2	82	FT	L	289PRO	304+00.45			5.141	0	0		0	0	1
SBB	CI-SBB2	47	FT	R	289PRO	307+89.35	15	5	5.053	1	2	1	0	0	0
	CI-SBB1	47	FT	R	289PRO	307+17.00	15	4	5.333	1	2	1	0	0	0
	CI-SBB0	59	FT	R	289PRO	304+76.42	15	4	6.333	1	2	1	0	0	0
	GI-SBB1	100	FT	R	289PRO	305+13.88			6.261	0	0		0	0	1
NB	CI-NB15	52	FT	L	289PRO	309+37.54	15	4.5	6.237	1	2	1	0	0	0
	CI-NB11	47	FT	L	289PRO	309+86.00	15	4	5.82	1	2	1	0	0	0
	CI-NB10	47	FT	L	289PRO	310+98.09	15	4	5.333	1	2	1	0	0	0
	CI-NB9	47	FT	L	289PRO	312+36.00	15	4	5.333	1	2	1	0	0	0
	CI-NB8	47	FT	L	289PRO	313+48.00	15	4	5.333	1	2	1	0	0	0
	CI-NB7	47	FT	L	289PRO	314+60.00	15	4	4.833	1	2	1	0	0	0
	CI-CR 98	124	FT	L	289PRO	315+36.55	10	3	4.333	1	1	1	0	0	0
	CI-NB6	47	FT	L	289PRO	316+82.00	15	4	4.833	1	2	1	0	0	0
	GI-NB1	76	FT	L	289PRO	316+53.97			7.923	0	0		0	0	1
	CI-NB5	47	FT	L	289PRO	317+32.00	15	4	4.833	1	2	1	0	0	0
	CI-NB4	47	FT	L	289PRO	317+82.00	15	4	4.333	1	2	1	0	0	0
	CI-NB3	47	FT	L	289PRO	318+32.00	15	4	4.333	1	2	1	0	0	0
	CI-NB2	48	FT	L	289PRO	318+77.00	15	3	4.333	1	2	1	0	0	0
	CI-NB1	48	FT	L	289PRO	319+94.00	15	3	4.333	1	2	1	0	0	0
SB	CI-SB6	47	FT	R	289PRO	309+37.80	15	3	6.544	1	2	1	0	0	0
	CI-SB5	47	FT	R	289PRO	311+36.00	15	3	4.333	1	2	1	0	0	0
	CI-SB4	47	FT	R	289PRO	313+48.00	15	3	4.333	1	2	1	0	0	0
	CI-SB3	47	FT	R	289PRO	316+52.70	15	3	4.333	1	2	1	0	0	0
	CI-SB2	47	FT	R	289PRO	318+05.00	15	3	4.333	1	2	1	0	0	0
	CI-SB1	47	FT	R	289PRO	320+00.00	15	3	4.333	1	2	1	0	0	0
NCC	CI-NCC18	47	FT	L	289PRO	338+10.00	15	4.5	5.833	1	2	1	0	0	0
	GI-NCC1B	67	FT	L	289PRO	338+54.29			3.737	0	0		0	0	1
	CI-NCC17	47	FT	L	289PRO	337+57.50	15	4.5	5.833	1	2	1	0	0	0
	CI-NCC16	47	FT	L	289PRO	337+05.00	15	4.5	5.833	1	2	1	0	0	0
	CI-NCC15	47	FT	L	289PRO	336+52.50	15	4.5	5.833	1	2	1	0	0	0
	CI-NCC14	47	FT	L	289PRO	336+00.00	15	4.5	5.833	1	2	1	0	0	0
	CI-NCC13	47	FT	L	289PRO	335+50.00	15	4	6	1	2	1	0	0	0
	CI-NCC12	47	FT	L	289PRO	335+00.00	15	4	4.833	1	2	1	0	0	0
	CI-NCC11	47	FT	L	289PRO	334+00.00	15	4	4.833	1	2	1	0	0	0
	CI-NCC10	47	FT	L	289PRO	333+00.00	15	4	4.833	1	2	1	0	0	0
	CI-NCC9	47	FT	L	289PRO	332+00.00	15	4	4.833	1	2	1	0	0	0
	CI-NCC8	47	FT	L	289PRO	330+00.00	15	4	4.833	1	2	1	0	0	0
	GI-NCC1A	66	FT	L	289PRO	331+50.02			2.5	0	0		0	1	0
	CI-NCC7	47	FT	L	289PRO	329+00.00	15	4	4.833	1	2	1	0	0	0
	CI-NCC6	47	FT	L	289PRO	328+00.00	15	4	4.833	1	2	1	0	0	0
	CI-NCC5	47	FT	L	289PRO	327+00.00	15	3.5	4.833	1	2	1	0	0	0
	CI-NCC4	47	FT	L	289PRO	326+00.00	15	3.5	4.833	1	2	1	0	0	0
	CI-NCC3	47	FT	L	289PRO	325+17.29	15	3.5	4.833	1	2	1	0	0	0
	CI-NCC2	47	FT	L	289PRO	324+24.29	15	3.5	4.833	1	2	1	0	0	0
	CI-NCC1	47	FT	L	289PRO	323+07.38	15	3.5	4.833	1	2	1	0	0	0

* FOR CONTRACTOR'S INFORMATION ONLY

Texas Department of Transportation
© 2011

SH 289 DRAINAGE SUMMARY SHEET

SHEET 3 OF 13

DESIGN	FED. RD. DIV. NO.	STATE PROJECT NO.			HIGHWAY NO.
AMW	6	(SEE TITLE SHEET)			SH 289
GRAPHICS AMW	STATE	DISTRICT	COUNTY		SHEET NO.
CHECK NVS	TEXAS	DALLAS	COLLIN		47
CHECK NVS	CONTROL 0091	SECTION 04	JOB 055		

T:\DALDGN*A\SH 289 Collin\THE PLANS\Summary Sheets\drainagesummarysheets.dgn
5/22/2011 9:54:51 AM

SUMMARY OF INLET ITEMS

NW ID	INLET ID	INLET LOCATION					L (FT)	W (FT)	HT (FT)	CURB INLET 465 2115 INLET (COMPL) TY-I MOD (EA)	CURB INLET 465 2221 INLET EXT TY-I (EA)	CURB INLET RING & COVER (EA)*	DROP INLET 465 2507 INLET (COMPL) (DROP) (TY-C) (1-GRATE) (EA)	DROP INLET 465 2508 INLET (COMPL) (DROP) (TY-C) (2-GRATE) (EA)	DROP INLET 465 2500 INLET (COMPL) (DROP) (TY-C) (3-GRATE) (EA)
SCC	CI-SCC8	47	FT	R	289PRO	338+10.00	15	3	8.194	1	2	1	0	0	0
	CI-SCC7	47	FT	R	289PRO	336+00.00	15	3	7.693	1	2	1	0	0	0
	CI-SCC6	47	FT	R	289PRO	334+00.00	15	3	4.333	1	2	1	0	0	0
	CI-SCC5	47	FT	R	289PRO	332+00.00	15	3	4.333	1	2	1	0	0	0
	CI-SCC4	47	FT	R	289PRO	330+00.00	15	3	4.333	1	2	1	0	0	0
	CI-SCC3	47	FT	R	289PRO	328+00.00	15	3	4.333	1	2	1	0	0	0
	CI-SCC2	47	FT	R	289PRO	326+10.00	10	3	5	1	1	1	0	0	0
	CI-SCC1	47	FT	R	289PRO	324+24.29	15	3	4.333	1	2	1	0	0	0
NC	CI-NC13	47	FT	L	289PRO	340+50.70	15	3	5.427	1	2	1	0	0	0
	CI-NC12	47	FT	L	289PRO	341+55.00	15	3	5.459	1	2	1	0	0	0
	CI-NC11	47	FT	L	289PRO	344+76.26	15	3	6.68	1	2	1	0	0	0
	GI-NC4	67	FT	L	289PRO	346+29.53			3.411	0	0		0	0	1
	CI-NC10	47	FT	L	289PRO	346+76.27	15	3	5.39	1	2	1	0	0	0
	GI-NC3	67	FT	L	289PRO	348+24.05			2.706	0	0		0	0	1
	CI-NC9	47	FT	L	289PRO	348+97.49	15	4	4.699	1	2	1	0	0	0
	CI-NC8	47	FT	L	289PRO	349+70.42	15	4	3.861	1	2	1	0	0	0
	CI-NC7	47	FT	L	289PRO	350+75.00	15	4	4.292	1	2	1	0	0	0
	GI-NC2	58	FT	L	289PRO	351+79.44			5.712	0	0		0	1	0
	CI-NC6	47	FT	L	289PRO	352+10.00	15	3.5	4.053	1	2	1	0	0	0
	CI-NC5	47	FT	L	289PRO	352+96.00	15	3.5	4.109	1	2	1	0	0	0
	CI-NC4	47	FT	L	289PRO	353+72.50	15	3	3.376	1	2	1	0	0	0
	CI-NC3	47	FT	L	289PRO	354+74.00	15	3	3.333	1	2	1	0	0	0
	GI-NC1	58	FT	L	289PRO	355+53.77			7	0	0		0	1	0
	CI-NC2	47	FT	L	289PRO	355+92.00	15	3	3.333	1	2	1	0	0	0
	CI-NC1	47	FT	L	289PRO	356+53.00	15	3	3.333	1	2	1	0	0	0
SC	CI-SC8	47	FT	R	289PRO	340+50.70	15	3.5	8.28	1	2	1	0	0	0
	CI-SC7	47	FT	R	289PRO	340+99.12	15	3.5	8.167	1	2	1	0	0	0
	CI-SC6	47	FT	R	289PRO	344+76.26	10	3.5	7.107	1	1	1	0	0	0
	CI-SC5	47	FT	R	289PRO	347+50.00	10	3	5.333	1	1	1	0	0	0
	CI-SC4	47	FT	R	289PRO	348+97.49	15	3.5	4.353	1	2	1	0	0	0
	CI-SC3	47	FT	R	289PRO	350+75.00	10	3	4.333	1	1	1	0	0	0
	CI-SC2	47	FT	R	289PRO	352+75.00	10	3	5	1	1	1	0	0	0
	CI-SC1	47	FT	R	289PRO	354+70.00	10	3	4.333	1	1	1	0	0	0
ND	CI-ND14	47	FT	L	289PRO	376+99.51	15	5	7.443	1	2	1	0	0	0
	CI-ND13	47	FT	L	289PRO	372+17.07	15	5	6.157	1	2	1	0	0	0
	GI-ND1A	65	FT	L	289PRO	372+17.04			5.22	0	0		0	0	1
	CI-ND12	47	FT	L	289PRO	371+00.00	15	5	5.333	1	2	1	0	0	0
	CI-ND11	47	FT	L	289PRO	369+50.00	15	5	5.333	1	2	1	0	0	0
	GI-ND1B	62	FT	L	289PRO	370+91.12			5	0	0		0	0	1
	CI-ND10	47	FT	L	289PRO	368+34.10	15	5	6	1	2	1	0	0	0
	CI-ND9	47	FT	L	289PRO	367+10.00	15	5	5.333	1	2	1	0	0	0
	CI-ND8	47	FT	L	289PRO	366+00.00	15	4	5.333	1	2	1	0	0	0
	CI-ND7	47	FT	L	289PRO	365+50.00	15	4	5.333	1	2	1	0	0	0
	CI-ND6	47	FT	L	289PRO	364+65.00	15	4	5.333	1	2	1	0	0	0
	CI-ND5	47	FT	L	289PRO	363+80.00	15	4	5.333	1	2	1	0	0	0
	CI-ND4	47	FT	L	289PRO	362+55.00	15	4	5.333	1	2	1	0	0	0
	CI-ND3	47	FT	L	289PRO	361+30.00	15	4	5.333	1	2	1	0	0	0
	CI-ND2	47	FT	L	289PRO	360+30.00	15	4	5.333	1	2	1	0	0	0
	CI-ND1	47	FT	L	289PRO	359+30.10	15	4	5.333	1	2	1	0	0	0
	CI-ND0	47	FT	L	289PRO	358+21.68	15	4	5.333	1	2	1	0	0	0

* FOR CONTRACTOR'S INFORMATION ONLY

Texas Department of Transportation
© 2011

SH 289 DRAINAGE SUMMARY SHEET

SHEET 4 OF 13

DESIGN	FED. RD. DIV. NO.	STATE PROJECT NO.		HIGHWAY NO.
AMW	6	(SEE TITLE SHEET)		SH 289
GRAPHICS AMW	STATE	DISTRICT	COUNTY	SHEET NO.
CHECK NVS	TEXAS	DALLAS	COLLIN	48
CHECK NVS	CONTROL 0091	SECTION 04	JOB 055	

SUMMARY OF INLET ITEMS

NW ID	INLET ID	INLET LOCATION					L (FT)	W (FT)	HT (FT)	CURB INLET 465 2115 INLET (COMPL) TY-I MOD (EA)	CURB INLET 465 2221 INLET EXT TY-I (EA)	CURB INLET RING & COVER (EA)*	DROP INLET 465 2507 INLET (COMPL) (DROP) (TY-C) (1-GRATE) (EA)	DROP INLET 465 2508 INLET (COMPL) (DROP) (TY-C) (2-GRATE) (EA)	DROP INLET 465 2500 INLET (COMPL) (DROP) (TY-C) (3-GRATE) (EA)
SD	CI-SD0	47	FT	R	289PRO	376+99.51	15	3.5	6.801	1	2	1	0	0	0
	CI-SD1	47	FT	R	289PRO	372+17.07	15	3.5	5.415	1	2	1	0	0	0
	CI-SD2	47	FT	R	289PRO	371+00.00	15	3.25	4.583	1	2	1	0	0	0
	CI-SD3	47	FT	R	289PRO	369+50.00	10	3	4.583	1	1	1	0	0	0
	CI-SD4	47	FT	R	289PRO	367+10.00	10	3	4.333	1	1	1	0	0	0
	CI-SD5	47	FT	R	289PRO	365+50.00	10	3	4.333	1	1	1	0	0	0
	CI-SD6	47	FT	R	289PRO	363+80.00	10	3	5	1	1	1	0	0	0
	CI-SD7	47	FT	R	289PRO	361+30.00	10	3	4.333	1	1	1	0	0	0
	CI-SD8	47	FT	R	289PRO	359+30.10	10	3	4.333	1	1	1	0	0	0
NGG	CI-NGG1	47	FT	L	289PRO	390+97.88	15	4.5	7.099	1	2	1	0	0	0
	CI-NGG2	47	FT	L	289PRO	389+50.00	15	4.5	6.997	1	2	1	0	0	0
	CI-NGG3	47	FT	L	289PRO	386+50.00	15	4	6.589	1	2	1	0	0	0
	CI-NGG4	47	FT	L	289PRO	383+50.00	15	4	6.689	1	2	1	0	0	0
	CI-NGG5	47	FT	L	289PRO	380+50.00	15	4	6.79	1	2	1	0	0	0
	CI-NGG6	47	FT	L	289PRO	379+07.41	15	4	5.333	1	2	1	0	0	0
	GI-NGG1A	68	FT	L	289PRO	380+44.36			5	0	0		0	0	1
SGG	CI-SGG1	47	FT	R	289PRO	390+97.88	10	3	4.996	1	1	1	0	0	0
	CI-SGG2	47	FT	R	289PRO	389+50.00	10	3	5.144	1	1	1	0	0	0
	CI-SGG3	47	FT	R	289PRO	386+50.00	10	3	4.983	1	1	1	0	0	0
	CI-SGG4	47	FT	R	289PRO	383+50.00	10	3	5.063	1	1	1	0	0	0
	CI-SGG5	47	FT	R	289PRO	380+50.00	10	3	4.333	1	1	1	0	0	0
	CI-SGG6	47	FT	R	289PRO	379+07.41	10	3.5	4.333	1	1	1	0	0	0
NG	GI-NG1C	68	FT	L	289PRO	392+09.97			3	0	0		0	0	1
	CI-NG1	47	FT	L	289PRO	393+50.00	10	3.5	5.808	1	1	1	0	0	0
	GI-NG1A	68	FT	L	289PRO	394+16.25			3	0	0		0	0	1
SG	CI-SG1	47	FT	R	289PRO	393+50.00	10	3	5.333	1	1	1	0	0	0
NHH	CI-NHH3	47	FT	L	289PRO	400+50.00	10.0	3	4.3	1	1	1	0	0	0
	CI-NHH2	47	FT	L	289PRO	398+50.00	10.0	3	4.3	1	1	1	0	0	0
	CI-NHH1	47	FT	L	289PRO	396+50.00	5.0	3	3.3	1	0	1	0	0	0
SHH	CI-SHH3	47	FT	R	289PRO	400+50.00	10.0	3	4.3	1	1	1	0	0	0
	CI-SHH2	47	FT	R	289PRO	398+50.00	10.0	3	4.3	1	1	1	0	0	0
	CI-SHH1	47	FT	R	289PRO	396+50.00	5.0	3	3.3	1	0	1	0	0	0
NH	CI-NH10	47	FT	L	289PRO	402+30.00	15.0	3.5	5.9	1	2	1	0	0	0
	CI-NH9	47	FT	L	289PRO	404+00.00	10.0	3.5	5.8	1	1	1	0	0	0
	CI-NH8	47	FT	L	289PRO	407+00.00	10.0	3.5	5.8	1	1	1	0	0	0
	CI-NH7	47	FT	L	289PRO	410+00.00	10.0	3.5	5.8	1	1	1	0	0	0
	CI-NH6	47	FT	L	289PRO	411+75.00	10.0	3.5	5.8	1	1	1	0	0	0
	CI-NH5	47	FT	L	289PRO	414+00.00	10.0	3.5	5.8	1	1	1	0	0	0
	CI-NH4	47	FT	L	289PRO	416+25.00	10.0	3.5	6.5	1	1	1	0	0	0
	GI-NH3	65	FT	L	289PRO	416+25.00			5.5	0	0		0	1	0
	GI-NH2	65	FT	L	289PRO	417+25.00			4.5	0	0		0	1	0
	GI-NH1	65	FT	L	289PRO	418+10.00			3.5	0	0		0	1	0
SH	CI-SH6	47	FT	R	289PRO	402+30.00	15.0	3	5.3	1	2	1	0	0	0
	CI-SH5	47	FT	R	289PRO	404+00.00	10.0	3	4.3	1	1	1	0	0	0
	CI-SH4	47	FT	R	289PRO	407+00.00	10.0	3	4.3	1	1	1	0	0	0
	CI-SH3	47	FT	R	289PRO	410+00.00	10.0	3	4.3	1	1	1	0	0	0
	CI-SH2	47	FT	R	289PRO	413+00.00	10.0	3	4.3	1	1	1	0	0	0
	CI-SH1	47	FT	R	289PRO	416+00.00	10.0	3	3.3	1	1	1	0	0	0

* FOR CONTRACTOR'S INFORMATION ONLY

Texas Department of Transportation
© 2011

SH 289 DRAINAGE SUMMARY SHEET

SHEET 5 OF 13

DESIGN	FED. RD. DIV. NO.	STATE PROJECT NO.		HIGHWAY NO.
AMW	6	(SEE TITLE SHEET)		SH 289
GRAPHICS AMW	STATE	DISTRICT	COUNTY	SHEET NO.
CHECK NVS	TEXAS	DALLAS	COLLIN	49
CHECK NVS	CONTROL	SECTION	JOB	
	0091	04	055	

4/11/2011 11:35:25 AM
T:\DALDGN*A\SH 289 Celina\THE PLANS\Summary Sheets\drainagesummarysheets.dgn

SUMMARY OF INLET ITEMS

NW ID	INLET ID	INLET LOCATION					L (FT)	W (FT)	HT (FT)	CURB INLET 465 2115 INLET (COMPL) TY-I MOD (EA)	CURB INLET 465 2221 INLET EXT TY-I (EA)	CURB INLET RING & COVER (EA)*	DROP INLET 465 2507 INLET (COMPL) (DROP) (TY-C) (1-GRATE) (EA)	DROP INLET 465 2508 INLET (COMPL) (DROP) (TY-C) (2-GRATE) (EA)	DROP INLET 465 2500 INLET (COMPL) (DROP) (TY-C) (3-GRATE) (EA)
NJJ	CI-NJJ10	47	FT	L	289PRO	433+00.00	10.0	3.5	7.3	1	1	1	0	0	0
	CI-NJJ9	47	FT	L	289PRO	430+00.00	10.0	3.5	6.3	1	1	1	0	0	0
	CI-NJJ8	47	FT	L	289PRO	427+00.00	10.0	3	5.3	1	1	1	0	0	0
	CI-NJJ7	47	FT	L	289PRO	424+00.00	10.0	3	5.3	1	1	1	0	0	0
	CI-NJJ6	47	FT	L	289PRO	422+00.00	10.0	3	5.3	1	1	1	0	0	0
	CI-NJJ5	47	FT	L	289PRO	420+00.00	10.0	3	5.4	1	1	1	0	0	0
	GI-NJJ2	130	FT	L	289PRO	419+26.00			4.5	0	0		1	0	0
	GI-NJJ1	110	FT	L	289PRO	418+90.00			3.5	0	0		0	1	0
SJJ	CI-SJJ5	47	FT	R	289PRO	433+00.00	10.0	3	6.3	1	1	1	0	0	0
	CI-SJJ4	47	FT	R	289PRO	430+00.00	10.0	3	4.3	1	1	1	0	0	0
	CI-SJJ3	47	FT	R	289PRO	427+00.00	10.0	3	4.3	1	1	1	0	0	0
	CI-SJJ2	47	FT	R	289PRO	424+00.00	10.0	3	4.3	1	1	1	0	0	0
	CI-SJJ1	47	FT	R	289PRO	421+00.00	10.0	3	4.3	1	1	1	0	0	0
NJ	CI-NJ11	47	FT	L	289PRO	434+47.00	15.0	3.5	7.8	1	2	1	0	0	0
	CI-NJ10	47	FT	L	289PRO	436+00.00	10.0	3.5	6.8	1	1	1	0	0	0
	CI-NJ9	47	FT	L	289PRO	438+75.00	10.0	3.5	5.8	1	1	1	0	0	0
	CI-NJ8	47	FT	L	289PRO	441+00.00	10.0	3.5	5.8	1	1	1	0	0	0
	CI-NJ7	47	FT	L	289PRO	444+00.00	15.0	3	4.3	1	2	1	0	0	0
	GI-NJ6	70	FT	L	289PRO	446+15.00			3.5	0	0		1	0	0
	CI-NJ5	47	FT	L	289PRO	447+00.00	10.0	3	5.0	1	1	1	0	0	0
	CI-NJ4	47	FT	L	289PRO	448+50.00	15.0	3	4.3	1	2	1	0	0	0
	CI-NJ3	47	FT	L	289PRO	450+00.00	15.0	3	4.3	1	2	1	0	0	0
	CI-NJ2	47	FT	L	289PRO	451+25.00	15.0	3	4.3	1	2	1	0	0	0
	CI-NJ1	47	FT	L	289PRO	452+50.00	15.0	3	4.3	1	2	1	0	0	0
SJ	CI-SJ8	47	FT	R	289PRO	434+47.00	15.0	3	7.3	1	2	1	0	0	0
	CI-SJ7	47	FT	R	289PRO	436+00.00	10.0	3	4.3	1	1	1	0	0	0
	CI-SJ6	47	FT	R	289PRO	438+00.00	10.0	3	4.3	1	1	1	0	0	0
	CI-SJ5	47	FT	R	289PRO	441+00.00	10.0	3	4.3	1	1	1	0	0	0
	CI-SJ4	47	FT	R	289PRO	444+00.00	10.0	3	4.3	1	1	1	0	0	0
	CI-SJ3	47	FT	R	289PRO	447+00.00	10.0	3	4.3	1	1	1	0	0	0
	CI-SJ2	47	FT	R	289PRO	450+00.00	10.0	3	5.0	1	1	1	0	0	0
	CI-SJ1	47	FT	R	289PRO	452+50.00	10.0	3	4.3	1	1	1	0	0	0
NKK	CI-NKK10	47	FT	L	289PRO	469+52.00	15.0	3.5	4.6	1	2	1	0	0	0
	CI-NKK9	47	FT	L	289PRO	467+75.00	10.0	3.5	4.6	1	1	1	0	0	0
	CI-NKK8	47	FT	L	289PRO	466+25.00	10.0	3.5	4.6	1	1	1	0	0	0
	CI-NKK7	47	FT	L	289PRO	464+75.00	15.0	3.5	4.6	1	2	1	0	0	0
	CI-NKK6	47	FT	L	289PRO	463+20.00	15.0	3	4.3	1	2	1	0	0	0
	CI-NKK5	47	FT	L	289PRO	461+75.00	15.0	3	4.3	1	2	1	0	0	0
	CI-NKK4	47	FT	L	289PRO	460+50.00	15.0	3	5.0	1	2	1	0	0	0
	CI-NKK3	47	FT	L	289PRO	459+00.00	15.0	3	4.3	1	2	1	0	0	0
	CI-NKK2	47	FT	L	289PRO	457+50.00	15.0	3	4.3	1	2	1	0	0	0
	CI-NKK1	47	FT	L	289PRO	456+00.00	15.0	3	4.3	1	2	1	0	0	0
SKK	CI-SKK6	47	FT	R	289PRO	469+52.00	15.0	3	4.4	1	2	1	0	0	0
	CI-SKK5	47	FT	R	289PRO	467+75.00	10.0	3	4.3	1	1	1	0	0	0
	CI-SKK4	47	FT	R	289PRO	464+75.00	10.0	3	4.3	1	1	1	0	0	0
	CI-SKK3	47	FT	R	289PRO	462+00.00	15.0	3	4.3	1	2	1	0	0	0
	CI-SKK2	47	FT	R	289PRO	459+00.00	15.0	3	4.3	1	2	1	0	0	0
	CI-SKK1	47	FT	R	289PRO	456+00.00	10.0	3	4.3	1	1	1	0	0	0

* FOR CONTRACTOR'S INFORMATION ONLY

Texas Department of Transportation
© 2011

SH 289 DRAINAGE SUMMARY SHEET

SHEET 6 OF 13

DESIGN	FED. RD. DIV. NO.	STATE PROJECT NO.		HIGHWAY NO.
AMW	6	(SEE TITLE SHEET)		SH 289
GRAPHICS AMW	STATE	DISTRICT	COUNTY	SHEET NO.
CHECK NVS	TEXAS	DALLAS	COLLIN	50
CHECK NVS	CONTROL 0091	SECTION 04	JOB 055	

4/11/2011 11:35:28 AM
T:\DALDGN*A\SH 289 Celina\THE PLANS\Summary Sheets\drainagesummarysheets.dgn

SUMMARY OF INLET ITEMS

NW ID	INLET ID	INLET LOCATION					L (FT)	W (FT)	HT (FT)	CURB INLET 465 2115 INLET (COMPL) TY-I MOD (EA)	CURB INLET 465 2221 INLET EXT TY-I (EA)	CURB INLET RING & COVER (EA)*	DROP INLET 465 2507 INLET (COMPL) (DROP) (TY-C) (1-GRATE) (EA)	DROP INLET 465 2508 INLET (COMPL) (DROP) (TY-C) (2-GRATE) (EA)	DROP INLET 465 2500 INLET (COMPL) (DROP) (TY-C) (3-GRATE) (EA)
NK	CI-NK5	47	FT	L	289PRO	471+50.00	10.0	3.5	5.4	1	1	1	0	0	0
	GI-NK3B	70	FT	L	289PRO	473+17.00			4.6	0	0		0	0	1
	CI-NK2	47	FT	L	289PRO	473+50.00	10.0	3	4.3	1	1	1	0	0	0
	GI-NK4	103	FT	L	289PRO	472+55.00			3.0	0	0		0	1	0
	GI-NK4A	103	FT	L	289PRO	472+17.00			3.0	0	0		1	0	0
	GI-NK3A	70	FT	L	289PRO	473+32.00			4.0	0	0		0	0	1
	CI-NK1	47	FT	L	289PRO	476+00.00	10.0	3	4.0	1	1	1	0	0	0
SK	CI-SK3	47	FT	R	289PRO	472+00.00	10.0	3	5.3	1	1	1	0	0	0
	CI-SK2	47	FT	R	289PRO	473+50.00	10.0	3	4.3	1	1	1	0	0	0
	CI-SK1	47	FT	R	289PRO	476+00.00	10.0	3	3.3	1	1	1	0	0	0
NLL	CI-NLL6	47	FT	L	289PRO	493+00.00	15.0	3	5.3	1	2	1	0	0	0
	CI-NLL5	47	FT	L	289PRO	491+00.00	10.0	3	4.3	1	1	1	0	0	0
	CI-NLL4	47	FT	L	289PRO	488+00.00	10.0	3	4.3	1	1	1	0	0	0
	CI-NLL3	47	FT	L	289PRO	485+00.00	10.0	3	4.3	1	1	1	0	0	0
	CI-NLL2	47	FT	L	289PRO	482+00.00	15.0	3	4.3	1	2	1	0	0	0
	CI-NLL1	47	FT	L	289PRO	479+00.00	10.0	3	4.3	1	1	1	0	0	0
SLL	CI-SLL6	47	FT	R	289PRO	493+00.00	15.0	3	8.3	1	2	1	0	0	0
	CI-SLL5	47	FT	R	289PRO	491+00.00	10.0	3	5.3	1	1	1	0	0	0
	CI-SLL4	47	FT	R	289PRO	488+00.00	10.0	3	4.3	1	1	1	0	0	0
	CI-SLL3	47	FT	R	289PRO	485+00.00	10.0	3	4.3	1	1	1	0	0	0
	CI-SLL2	47	FT	R	289PRO	482+00.00	15.0	3	4.3	1	2	1	0	0	0
	CI-SLL1	47	FT	R	289PRO	479+00.00	10.0	3	4.3	1	1	1	0	0	0
NL	CI-NL4	47	FT	L	289PRO	494+60.00	10.0	3	5.3	1	1	1	0	0	0
	CI-NL3	47	FT	L	289PRO	496+40.00	10.0	3	4.3	1	1	1	0	0	0
	CI-NL2	47	FT	L	289PRO	499+40.00	10.0	3	4.3	1	1	1	0	0	0
	CI-NL1	47	FT	L	289PRO	502+10.00	10.0	3	3.3	1	1	1	0	0	0
SL	CI-SL4	47	FT	R	289PRO	494+60.00	10.0	3	6.3	1	1	1	0	0	0
	CI-SL3	47	FT	R	289PRO	496+40.00	10.0	3	5.3	1	1	1	0	0	0
	CI-SL2	47	FT	R	289PRO	499+40.00	10.0	3	4.3	1	1	1	0	0	0
	CI-SL1	47	FT	R	289PRO	502+10.00	10.0	3	3.3	1	1	1	0	0	0
NM	CI-NM5	47	FT	L	289PRO	505+00.00	10.0	3	8.8	1	1	1	0	0	0
	CI-NM4	47	FT	L	289PRO	508+00.00	15.0	3	8.3	1	2	1	0	0	0
	CI-NM3	47	FT	L	289PRO	511+00.00	15.0	3	7.8	1	2	1	0	0	0
	CI-NM2	47	FT	L	289PRO	513+75.00	15.0	3	6.8	1	2	1	0	0	0
	CI-NM1	47	FT	L	289PRO	516+00.00	15.0	3	6.3	1	2	1	0	0	0
	EXIST CI-A1	47	FT	L	289PRO	519+20.00	10.0	3	5.2						
SM	CI-SM6	47	FT	R	289PRO	504+30.00	10.0	3	9.3	1	1	1	0	0	0
	CI-SM5	47	FT	R	289PRO	506+00.00	10.0	3	7.3	1	1	1	0	0	0
	CI-SM4	47	FT	R	289PRO	508+50.00	15.0	3	7.3	1	2	1	0	0	0
	CI-SM3	47	FT	R	289PRO	511+50.00	15.0	3	6.8	1	2	1	0	0	0
	CI-SM2	47	FT	R	289PRO	514+40.00	15.0	3	4.3	1	2	1	0	0	0
	CI-SM1	47	FT	R	289PRO	517+00.00	10.0	3	4.3	1	1	1	0	0	0
	EXIST CI-B1	47	FT	R	289PRO	519+20.00	10.0	3	5.3						
CELINA	CI-CELINA SC LTD	15	FT	R	HLDWC1	0+77.09	10	3	4.333	1	1	1	0	0	0
	GI-CELINA SC LTD	16	FT	L	HLDWC1	0+78.11			3	0	0		1	0	0
						PROJECT TOTAL				**211**	**328**	**211**	**5**	**8**	**13**

* FOR CONTRACTOR'S INFORMATION ONLY

Texas Department of Transportation
© 2011

SH 289 DRAINAGE SUMMARY SHEET

SHEET 7 OF 13

DESIGN	FED. RD. DIV. NO.	STATE PROJECT NO.		HIGHWAY NO.
AMW	6	(SEE TITLE SHEET)		SH 289
GRAPHICS AMW	STATE	DISTRICT	COUNTY	SHEET NO.
CHECK NVS	TEXAS	DALLAS	COLLIN	51
CHECK NVS	CONTROL 0091	SECTION 04	JOB 055	

T:\DALDGN*A\SH 289 Celina\THE PLANS\Summary Sheets\drainagesummarysheets.dgn

5/22/2011 9:55:10 AM

R-201104-01

5/22/2011 9:55:27 AM
T:\DALDGN*A\SH 289 Collin\THE PLANS\Summary Sheets\drainagesummarysheets.dgn

SUMMARY OF STORM SEWER ITEMS

NW. ID	LINE	FROM	TO	* STRUCT EXCAV (PIPE) (CY)	400 2005 CEMENT STABL BKFL (CY)	402 2001 TRENCH EXCAV PROTECT (LF)	464 2003 RC PIPE CL III 18" (LF)	464 2005 RC PIPE CL III 24" (LF)	464 2006 RC PIPE CL III 27" (LF)	464 2007 RC PIPE CL III 30" (LF)	464 2009 RC PIPE CL III 36" (LF)	464 2010 RC PIPE CL III 42" (LF)	464 2011 RC PIPE CL III 48" (LF)	462 2015 CONC BOX CULV 7' X 4' (LF)	462 2019 CONC BOX CULV 8' X 4' (LF)	462 2001 CONC BOX CULV 3' X 2' (LF)
NBB	LINE NBB8	JOINT NBB3	OUTLET NBB	62.9		35							45.8			
	LINE NBB7	CI-NBB1	JOINT NBB3	28.1		16							15.7			
	LINE NBB6	CI-NBB2	CI-NBB1	360.4		195							195.0			
	LINE NBB5	JOINT NBB2	CI-NBB2	138.5		69							68.7			
	LINE NBB2	JOINT NBB1	JOINT NBB2	298.6		128							127.8			
	LINE NBB4	GI-NBB1	JOINT NBB2	24.6	0.90	17					16.7					
	LINE NBB3	GI-NBB2	JOINT NBB1	30.2	1.58	29					29.4					
	LINE J57 021	JOINT-J57 021	JOINT NBB1	189.5		102							101.8			
SBB	LINE SBB5	CI-SBB2	OUTLET SBB	118.2		98					97.6					
	LINE SBB4	CI-SBB1	CI-SBB2	69.1		68					67.4					
	LINE SBB2	JOINT SBB1	CI-SBB1	264.9		201					200.7					
	LINE SBB0	CI-SBB0	JOINT SBB1	46.7		36					35.3					
	LINE SBB1	GI-SBB1	JOINT SBB1	43.9		43		42.4								
	LINE J56 021	JOINT-J54	CI-SBB0	241.4		175					174.5					
NB	LINE NB18	JOINT NB3	OUTLET NB	19.6							29.0					
	LINE NB17	CI-NB15	JOINT NB3	10.4							11.7					
	LINE NB16	CI-NB11	CI-NB15	41.0							48.3					
	LINE NB12	CI-NB10	CI-NB11	106.1		86					112.1					
	LINE NB11A	JOINT NB4	CI-NB10	68.8		71					70.8					
	LINE NB11	CI-NB9	JOINT NB4	61.0		63					62.2					
	LINE NB11B	MH NB2	JOINT NB4	7.5		5		10.1								
	LINE NB10	CI-NB8	CI-NB9	111.3		107					107.0					
	LINE NB9	CI-NB7	CI-NB8	99.1		107				107.0						
	LINE NB8D	JOINT NB2A	CI-NB7	69.0		74				73.8						
	LINE NB8B	JOINT NB2	JOINT NB2A	93.1	0.21	77				76.6						
	LINE CR 98B	JOINT NB2B	JOINT NB2A	25.3	1.19	32		31.6								
	LINE NB8	JOINT NB1	JOINT NB2	56.8		41				41.0						
	LINE NB8A	EXIST CR98 30"	JOINT NB2	25.9	1.16	16					16.3					
	LINE CR 98A	CI-CR 98	JOINT NB2B	23.2				45.8								
	LINE NB6	CI-NB6	JOINT NB1	29.6		26				25.5						
	LINE NB7	GI-NB1	JOINT NB1	30.7	1.02	27		26.5								
	LINE NB5	CI-NB5	CI-NB6	58.3		45				45.0						
	LINE NB4	CI-NB4	CI-NB5	46.9		45		45.0								
	LINE NB3	CI-NB3	CI-NB4	40.1		45		45.0								
	LINE NB2	CI-NB2	CI-NB3	29.1		15		40.0								
	LINE NB1	CI-NB1	CI-NB2	102.0		75		112.0								
SB	LINE SB6	CI-SB6	OUTLET SB	8.5				11.9								
	LINE SB5	CI-SB5	CI-SB6	105.8				193.2								
	LINE SB4	CI-SB4	CI-SB5	121.0				207.0								
	LINE SB3	CI-SB3	CI-SB4	228.8		150		299.7								
	LINE SB2	CI-SB2	CI-SB3	138.9		147		147.3								
	LINE SB1	CI-SB1	CI-SB2	140.8		70		190.0								
NCC	LINE NCC20	JOINT NCC2	OUTLET NCC	138.5		50						135.9				
	LINE NCC19	CI-NCC18	JOINT NCC2	34.1								41.8				
	LINE NCCG1B	GI-NCC1B	JOINT NCC2	12.5							17.8					
	LINE NCC18	CI-NCC17	CI-NCC18	37.0								47.5				
	LINE NCC17	CI-NCC16	CI-NCC17	40.8								47.5				
	LINE NCC16	CI-NCC15	CI-NCC16	46.4		5						47.5				
	LINE NCC15	CI-NCC14	CI-NCC15	53.4		48						47.5				
	LINE NCC14	CI-NCC13	CI-NCC14	53.9		45						45.0				
	LINE NCC13	CI-NCC12	CI-NCC13	42.5		45				45.0						
	LINE NCC12	CI-NCC11	CI-NCC12	90.1		95				95.0						
	LINE NCC11	CI-NCC10	CI-NCC11	96.8		95				95.0						
	LINE NCC10	CI-NCC9	CI-NCC10	93.4		95				95.0						
	LINE NCC9	JOINT NCC1	CI-NCC9	33.6		17				47.5						
	LINE NCC8	CI-NCC8	JOINT NCC1	110.7	0.21					147.5						
	LINE NCC4A	GI-NCC1A	JOINT NCC1	6.0			17.1									

* FOR CONTRACTOR'S INFORMATION ONLY

Texas Department of Transportation
© 2011

SH 289 DRAINAGE SUMMARY SHEET

SHEET 8 OF 13

DESIGN	FED. RD. DIV. NO.	STATE PROJECT NO.		HIGHWAY NO.
AMW	6	(SEE TITLE SHEET)		SH 289
GRAPHICS AMW	STATE	DISTRICT	COUNTY	SHEET NO.
CHECK NVS	TEXAS	DALLAS	COLLIN	52
CHECK NVS	CONTROL 0091	SECTION 04	JOB 055	

4/11/2011 11:35:37 AM
T:\DALDGN*A\SH 289 Celina\THE PLANS\Summary Sheets\drainagesummarysheets.dgn

SUMMARY OF STORM SEWER ITEMS

NW. ID	LINE	FROM	TO	* STRUCT EXCAV (PIPE) (CY)	400 2005 CEMENT STABL BKFL (CY)	402 2001 TRENCH EXCAV PROTECT (LF)	464 2003 RC PIPE CL III 18" (LF)	464 2005 RC PIPE CL III 24" (LF)	464 2006 RC PIPE CL III 27" (LF)	464 2007 RC PIPE CL III 30" (LF)	464 2009 RC PIPE CL III 36" (LF)	464 2010 RC PIPE CL III 42" (LF)	464 2011 RC PIPE CL III 48" (LF)	462 2015 CONC BOX CULV 7' X 4' (LF)	462 2019 CONC BOX CULV 8' X 4' (LF)	462 2001 CONC BOX CULV 3' X 2' (LF)
NCC (CONT.)	LINE NCC7	CI-NCC7	CI-NCC8	67.1						95.0						
	LINE NCC6	CI-NCC6	CI-NCC7	85.5		85				95.0						
	LINE NCC5	CI-NCC5	CI-NCC6	100.9		95				95.0						
	LINE NCC4	CI-NCC4	CI-NCC5	100.3		95				95.0						
	LINE NCC3	CI-NCC3	CI-NCC4	80.6		78				77.7						
	LINE NCC2	CI-NCC2	CI-NCC3	91.7		88				88.0						
	LINE NCC1	CI-NCC1	CI-NCC2	125.5		112				111.9						
SCC	LINE SCC8	CI-SCC8	OUTLET SCC	145.7		75		177.4								
	LINE SCC7	CI-SCC7	CI-SCC8	158.5		205		205.0								
	LINE SCC6	CI-SCC6	CI-SCC7	124.9				195.0								
	LINE SCC5	CI-SCC5	CI-SCC6	104.9				195.0								
	LINE SCC4	CI-SCC4	CI-SCC5	126.4		10		195.0								
	LINE SCC3	CI-SCC3	CI-SCC4	115.5				195.0								
	LINE SCC2	CI-SCC2	CI-SCC3	144.9		185		185.0								
	LINE SCC1	CI-SCC1	CI-SCC2	111.1				180.7								
NC	LINE NC20	JOINT NC19	OUTLET NC	129.0		45							0.0	0.0	45.0	0.0
	LAT NC13	CI-NC13	JOINT NC19	5.1	0.25	8		7.5						0.0	0.0	0.0
	LINE NC19	JOINT NC18	JOINT NC19	288.3		104							0.0	0.0	104.3	0.0
	LAT NC12	CI-NC12	JOINT NC18	4.4	0.25			7.5						0.0	0.0	0.0
	LINE NC18	JOINT NC17	JOINT NC18	683.1		255							0.0	0.0	255.2	0.0
	LAT CTC B	CTC MH B	JOINT NC17	40.1	3.35	24							20.6	0.0	0.0	0.0
	LINE NC17	JOINT NC16	JOINT NC17	164.0		66							0.0	66.0	0.0	0.0
	LAT NC11	CI-NC11	JOINT NC16	5.9	0.25	5		7.5						0.0	0.0	0.0
	LINE NC16	JOINT NC15	JOINT NC16	310.3		153							0.0	153.3	0.0	0.0
	LINE NC15	JOINT NC14	JOINT NC15	85.6		47							0.0	46.7	0.0	0.0
	LAT GI-NC4	GI-NC4	JOINT NC15	14.5		3		25.8						0.0	0.0	0.0
	LAT NC10	CI-NC10	JOINT NC14	4.9	0.25	2		7.5						0.0	0.0	0.0
	LINE NC14	JOINT NC13	JOINT NC14	205.2		110							0.0	109.8	0.0	0.0
	LAT CTC A	CTC MH A	JOINT NC13	17.5		4							22.6	0.0	0.0	0.0
	LINE NC12	JOINT NC12	JOINT NC13	40.7		38		0.0						0.0	0.0	38.0
	LINE NC11	JOINT NC11	JOINT NC12	76.7		73		0.0						0.0	0.0	73.4
	LAT GI-NC3	GI-NC3	JOINT NC12	11.1				25.8						0.0	0.0	0.0
	LAT NC9	CI-NC9	JOINT NC11	5.1	0.25	2		7.5						0.0	0.0	0.0
	LINE NC10	JOINT NC10	JOINT NC11	72.9		73		0.0						0.0	0.0	72.9
	LAT NC8	CI-NC8	JOINT NC10	4.9	0.25	2		7.5						0.0	0.0	0.0
	LINE NC9	JOINT NC9	JOINT NC10	104.9		105		0.0						0.0	0.0	104.6
	LAT NC7	CI-NC7	JOINT NC9	4.9	0.25			7.5						0.0	0.0	0.0
	LINE NC8	JOINT NC8	JOINT NC9	84.5		87		0.0						0.0	0.0	86.8
	LINE NC7	JOINT NC7	JOINT NC8	51.6		48		0.0						0.0	0.0	48.2
	LAT GI-NC2	GI-NC2	JOINT NC8	6.8		27		24.9						0.0	0.0	0.0
	LAT NC6	CI-NC6	JOINT NC7	5.3	0.25			7.5						0.0	0.0	0.0
	LINE NC6	JOINT NC6	JOINT NC7	76.8		25		0.0						0.0	0.0	86.0
	LAT NC5	CI-NC5	JOINT NC6	4.9	0.25			7.5						0.0	0.0	0.0
	LINE NC5	JOINT NC5	JOINT NC6	61.6				0.0						0.0	0.0	76.5
	LAT NC4	CI-NC4	JOINT NC5	4.5	0.25			7.5						0.0	0.0	0.0
	LINE NC4	JOINT NC4	JOINT NC5	72.7				0.0						0.0	0.0	101.5
	LAT NC3	CI-NC3	JOINT NC4	4.5				7.5						0.0	0.0	0.0
	LINE NC3	JOINT NC3	JOINT NC4	51.4		12		0.0						0.0	0.0	62.0
	LINE NC2	JOINT NC2	JOINT NC3	49.4		20		0.0						0.0	0.0	56.0
	LAT GI-NC1	GI-NC1	JOINT NC3	7.4		25		25.0						0.0	0.0	0.0
	LAT NC2	CI-NC2	JOINT NC2	4.3				7.5						0.0	0.0	0.0
	LINE NC1	JOINT NC1	JOINT NC2	35.8				0.0						0.0	0.0	61.0
	LAT NC1	CI-NC1	JOINT NC1	3.6				7.5						0.0	0.0	0.0
SC	LINE SC8	CI-SC8	OUTLET SC	32.6		30		43.2								
	LINE SC7	CI-SC7	CI-SC8	32.2		21		43.4								
	LINE SC6A	MH SC1	CI-SC7	168.4		206		206.0								
	LINE SC6	CI-SC6	MH SC1	125.5		101		163.3								
	LINE SC5	CI-SC5	CI-SC6	146.3				268.7								
	LINE SC4	CI-SC4	CI-SC5	59.4				142.5								

* FOR CONTRACTOR'S INFORMATION ONLY

Texas Department of Transportation
© 2011

SH 289
DRAINAGE
SUMMARY SHEET

SHEET 9 OF 13

DESIGN	FED. RD. DIV. NO.	STATE PROJECT NO.		HIGHWAY NO.
AMW	6	(SEE TITLE SHEET)		SH 289
GRAPHICS AMW	STATE	DISTRICT	COUNTY	SHEET NO.
CHECK NVS	TEXAS	DALLAS	COLLIN	53
CHECK NVS	CONTROL 0091	SECTION 04	JOB 055	

SUMMARY OF STORM SEWER ITEMS

NW. ID	LINE	FROM	TO	* STRUCT EXCAV (PIPE) (CY)	400 2005 CEMENT STABL BKFL (CY)	402 2001 TRENCH EXCAV PROTECT (LF)	464 2003 RC PIPE CL III 18" (LF)	464 2005 RC PIPE CL III 24" (LF)	464 2006 RC PIPE CL III 27" (LF)	464 2007 RC PIPE CL III 30" (LF)	464 2009 RC PIPE CL III 36" (LF)	464 2010 RC PIPE CL III 42" (LF)	464 2011 RC PIPE CL III 48" (LF)	462 2015 CONC BOX CULV 7' X 4' (LF)	462 2019 CONC BOX CULV 8' X 4' (LF)	462 2001 CONC BOX CULV 3' X 2' (LF)
SC (CONT.)	LINE SC3	CI-SC3	CI-SC4	50.3				172.5								
	LINE SC2	CI-SC2	CI-SC3	63.7				195.0								
	LINE SC1	CI-SC1	CI-SC2	89.1				190.0								
ND	LINE ND17	CI-ND14	OUTLET ND	113.1							52.6					
	LINE ND16	MH NG2	CI-ND14	76.0							116.2					
	LINE ND15	MH NG1	MH NG2	127.3							175.6					
	LINE ND14	CI-ND13	MH NG1	167.5		95					177.5					
	LINE ND12	GI-ND1A	CI-ND13	3.2	0.59	11					11.0					
	LINE ND13	CI-ND12	CI-ND13	125.0		111					111.0					
	LINE ND10	CI-ND11	CI-ND12	171.1		144					143.7					
	LINE ND11	GI-ND1B	CI-ND12	13.5		13					12.8					
	LINE ND9	CI-ND10	CI-ND11	124.2		110					109.9					
	LINE ND8	CI-ND9	CI-ND10	130.1		118					118.0					
	LINE ND7	CI-ND8	CI-ND9	92.5		105		104.7								
	LINE ND6A	CI-ND7	CI-ND8	40.9		45		45.0								
	LINE ND6	CI-ND6	CI-ND7	73.0		80		80.0								
	LINE ND5	CI-ND5	CI-ND6	78.1		80		80.0								
	LINE ND4	CI-ND4	CI-ND5	114.7		120		120.0								
	LINE ND3	CI-ND3	CI-ND4	128.9		120		120.0								
	LINE ND2	CI-ND2	CI-ND3	96.5		95		95.0								
	LINE ND1	CI-ND1	CI-ND2	88.4		95		94.9								
	LINE ND0	CI-ND0	CI-ND1	90.5		104		103.4								
SD	LINE SD11	CI-SD0	OUTLET SD	35.7					61.1							
	LINE SD10	MH SD2	CI-SD0	79.7		40			107.1							
	LINE SD9	MH SD1	MH SD2	150.9		95			190.8							
	LINE SD8	CI-SD1	MH SD1	209.0		178			177.6							
	LINE SD7	CI-SD2	CI-SD1	109.8		113			113.0							
	LINE SD6	CI-SD3	CI-SD2	138.8		146			146.3							
	LINE SD5	CI-SD4	CI-SD3	135.0				237.0								
	LINE SD4	CI-SD5	CI-SD4	73.4				155.3								
	LINE SD3	CI-SD6	CI-SD5	68.8				165.0								
	LINE SD2	CI-SD7	CI-SD6	100.9				245.0								
	LINE SD1	CI-SD8	CI-SD7	112.9		50		194.9								
NGG	LINE NGG7	CI-NGG1	OUTLET NGG	33.5				38.4								
	LINE NGG6	CI-NGG2	CI-NGG1	183.5		143		142.9								
	LINE NGG5	CI-NGG3	CI-NGG2	360.2		295		294.7								
	LINE NGG4	CI-NGG4	CI-NGG3	341.7		292		292.4								
	LINE NGG3	CI-NGG5	CI-NGG4	287.2		215		292.4								
	LINE NGG1	CI-NGG6	CI-NGG5	86.2				136.4								
	LINE NGG2	GI-NGG1A	CI-NGG5	14.5				16.3								
SGG	LINE SGG6	CI-SGG1	OUTLET SGG	12.0				38.4								
	LINE SGG5	CI-SGG2	CI-SGG1	80.6					142.9							
	LINE SGG4	CI-SGG3	CI-SGG2	199.7		50		295.3								
	LINE SGG3	CI-SGG4	CI-SGG3	191.9				297.5								
	LINE SGG2	CI-SGG5	CI-SGG4	121.7				297.5								
	LINE SGG1	CI-SGG6	CI-SGG5	28.5				138.8								
NG	LINE NG6	JOINT J2NG	OUTLET NG	17.9		15			25.3							
	LINE NG4	GI-NG1C	JOINT J2NG	15.1				24.1								
	LINE NG2	CI-NG1	JOINT J2NG	78.9					154.4							
	LINE NG1	GI-NG1A	CI-NG1	27.7				62.6								
SG	LINE SG1	CI-SG1	OUTLET SG	77.1				179.8								
NHH	LINE NHH3	CI-NHH3	OUTLET NHH	11.9				108.6								
	LINE NHH2	CI-NHH2	CI-NHH3	0.3				195.0								
	LINE NHH1	CI-NHH1	CI-NHH2	0.4				195.0								

1 1 1

* FOR CONTRACTOR'S INFORMATION ONLY

1 Replaced 4/29/11 JB

Texas Department of Transportation
© 2011

SH 289 DRAINAGE SUMMARY SHEET

SHEET 10 OF 13

DESIGN	FED. RD. DIV. NO.	STATE PROJECT NO.		HIGHWAY NO.
AMW	6	(SEE TITLE SHEET)		SH 289
GRAPHICS	STATE	DISTRICT	COUNTY	SHEET NO.
AMW	TEXAS	DALLAS	COLLIN	54
CHECK	CONTROL	SECTION	JOB	
NVS	0091	04	055	
CHECK NVS				

R-201104-01

T:\DALDGN*A\SH 289 Celina\THE PLANS\Summary Sheets\drainagesummarysheets.dgn

6/24/2011 12:27:33 PM

SUMMARY OF STORM SEWER ITEMS

NW. ID	LINE	FROM	TO	* STRUCT EXCAV (PIPE) (CY)	400 2005 CEMENT STABL BKFL (CY)	402 2001 TRENCH EXCAV PROTECT (LF)	464 2003 RC PIPE CL III 18" (LF)	464 2005 RC PIPE CL III 24" (LF)	464 2006 RC PIPE CL III 27" (LF)	464 2007 RC PIPE CL III 30" (LF)	464 2009 RC PIPE CL III 36" (LF)	464 2010 RC PIPE CL III 42" (LF)	464 2011 RC PIPE CL III 48" (LF)	462 2015 CONC BOX CULV 7' X 4' (LF)	462 2019 CONC BOX CULV 8' X 4' (LF)	462 2001 CONC BOX CULV 3' X 2' (LF)
SHH	LINE SHH3	CI-SHH3	OUTLET SHH	5.1				108.5								
	LINE SHH2	CI-SHH2	CI-SHH3	17.0				195.0								
	LINE SHH1	CI-SHH1	CI-SHH2	23.6				195.0								
NH	LINE NH10	CI-NH10	OUTLET NH	17.8						47.3						
	LINE NH9	CI-NH9	CI-NH10	60.4						165.0						
	LINE NH8	CI-NH8	CI-NH9	106.6						295.0						
	LINE NH7	CI-NH7	CI-NH8	152.3						295.0						
	LINE NH6	CI-NH6	CI-NH7	130.4		50				170.0						
	LINE NH5	CI-NH5	CI-NH6	214.9		220				220.0						
	LINE NH4	CI-NH4	CI-NH5	211.9		220				220.0						
	LINE NH3	GI-NH3	CI-NH4	12.1		13				13.0						
	LINE NH2	GI-NH2	GI-NH3	79.8		57				94.7						
	LINE NH1	GI-NH1	GI-NH2	52.5						79.8						
SH	LINE SH6	CI-SH6	OUTLET SH	11.5				47.3								
	LINE SH5	CI-SH5	CI-SH6	34.7				165.0								
	LINE SH4	CI-SH4	CI-SH5	40.4				295.0								
	LINE SH3	CI-SH3	CI-SH4	64.8				295.0								
	LINE SH2	CI-SH2	CI-SH3	138.3				295.0								
	LINE SH1	CI-SH1	CI-SH2	147.2				295.0								
NJJ	LINE NJJ10	CI-NJJ10	OUTLET NJJ	33.2						68.0						
	LINE NJJ9	CI-NJJ9	CI-NJJ10	167.3						295.0						
	LINE NJJ8	CI-NJJ8	CI-NJJ9	199.2		125		295.0								
	LINE NJJ7	CI-NJJ7	CI-NJJ8	212.6		110		295.0								
	LINE NJJ6	CI-NJJ6	CI-NJJ7	130.7				195.0								
	LINE NJJ5	CI-NJJ5	CI-NJJ6	117.3				195.1								
	LINE NJJ4	JOINT NJJ4	CI-NJJ5	31.2		15		45.8								
	LAT NJJ3	JOINT NJJ3	JOINT NJJ4	24.4		5		36.7								
	LAT NJJ2	JOINT NJJ2	JOINT NJJ3	25.9		35		35.1								
	LAT NJJ1	GI-NJJ2	JOINT NJJ2	13.1				18.5								
	LINE NJJ1	GI-NJJ1	JOINT NJJ2	21.1		15		35.2								
SJJ	LINE SJJ5	CI-SJJ5	OUTLET SJJ	38.9				68.0								
	LINE SJJ4	CI-SJJ4	CI-SJJ5	101.4				295.0								
	LINE SJJ3	CI-SJJ3	CI-SJJ4	126.9				295.0								
	LINE SJJ2	CI-SJJ2	CI-SJJ3	121.8				295.0								
	LINE SJJ1	CI-SJJ1	CI-SJJ2	102.9				295.0								
NJ	LINE NJ12	CI-NJ11	OUTLET NJ	18.9						38.0						
	LINE NJ11	CI-NJ10	CI-NJ11	86.1						148.0						
	LINE NJ10	CI-NJ9	CI-NJ10	158.3		35				270.0						
	LINE NJ9	CI-NJ8	CI-NJ9	133.2						220.0						
	LINE NJ8	CI-NJ7	CI-NJ8	184.1		70		295.0								
	LINE NJ7	JOINT NJ6	CI-NJ7	121.3		95		212.3								
	LAT NJ6	GI-NJ6	JOINT NJ6	8.0				20.0								
	LINE NJ5	CI-NJ5	JOINT NJ6	42.2				82.7								
	LINE NJ4	CI-NJ4	CI-NJ5	90.3				145.0								
	LINE NJ3	CI-NJ3	CI-NJ4	105.2		90		145.0								
	LINE NJ2	CI-NJ2	CI-NJ3	89.3		120		120.0								
	LINE NJ1	CI-NJ1	CI-NJ2	92.8		120		120.0								
SJ	LINE SJ8	CI-SJ8	OUTLET SJ	19.0				38.0								
	LINE SJ7	CI-SJ7	CI-SJ8	42.2				148.0								
	LINE SJ6	CI-SJ6	CI-SJ7	16.1				195.0								
	LINE SJ5	CI-SJ5	CI-SJ6	48.8				295.0								
	LINE SJ4	CI-SJ4	CI-SJ5	101.4				295.0								
	LINE SJ3	CI-SJ3	CI-SJ4	129.1				295.0								
	LINE SJ2	CI-SJ2	CI-SJ3	123.2				295.0								
	LINE SJ1	CI-SJ1	CI-SJ2	162.8				245.0								

* FOR CONTRACTOR'S INFORMATION ONLY

Texas Department of Transportation
© 2011

SH 289 DRAINAGE SUMMARY SHEET

SHEET 11 OF 13

DESIGN	FED. RD. DIV. NO.	STATE PROJECT NO.		HIGHWAY NO.
AMW	6	(SEE TITLE SHEET)		SH 289
GRAPHICS AMW	STATE	DISTRICT	COUNTY	SHEET NO.
CHECK NVS	TEXAS	DALLAS	COLLIN	55
CHECK NVS	CONTROL 0091	SECTION 04	JOB 055	

T:\DALDGN*A\SH 289 Celina\THE PLANS\Summary Sheets\drainagesummarysheets.dgn 4/11/2011 11:35:44 AM

4/11/2011 11:35:47 AM

SUMMARY OF STORM SEWER ITEMS

NW. ID	LINE	FROM	TO	* STRUCT EXCAV (PIPE) (CY)	400 2005 CEMENT STABL BKFL (CY)	402 2001 TRENCH EXCAV PROTECT (LF)	464 2003 RC PIPE CL III 18" (LF)	464 2005 RC PIPE CL III 24" (LF)	464 2006 RC PIPE CL III 27" (LF)	464 2007 RC PIPE CL III 30" (LF)	464 2009 RC PIPE CL III 36" (LF)	464 2010 RC PIPE CL III 42" (LF)	464 2011 RC PIPE CL III 48" (LF)	462 2015 CONC BOX CULV 7' X 4' (LF)	462 2019 CONC BOX CULV 8' X 4' (LF)	462 2001 CONC BOX CULV 3' X 2' (LF)
NKK	LINE NKK10	CI-NKK10	OUTLET NKK	55.4						88.2						
	LINE NKK9	CI-NKK9	CI-NKK10	124.8						172.0						
	LINE NKK8	CI-NKK8	CI-NKK9	117.8		145				145.0						
	LINE NKK7	CI-NKK7	CI-NKK8	126.8		145				145.0						
	LINE NKK6	CI-NKK6	CI-NKK7	108.6		60		150.1								
	LINE NKK5	CI-NKK5	CI-NKK6	97.5		107		140.0								
	LINE NKK4	CI-NKK4	CI-NKK5	98.9		120		120.0								
	LINE NKK3	CI-NKK3	CI-NKK4	136.6		145		145.0								
	LINE NKK2	CI-NKK2	CI-NKK3	140.6		145		145.1								
	LINE NKK1	CI-NKK1	CI-NKK2	145.6		145		145.3								
SKK	LINE SKK6	CI-SKK6	OUTLET SKK	91.2				186.2								
	LINE SKK5	CI-SKK5	CI-SKK6	66.9				172.0								
	LINE SKK4	CI-SKK4	CI-SKK5	147.2				295.0								
	LINE SKK3	CI-SKK3	CI-SKK4	132.9				270.0								
	LINE SKK2	CI-SKK2	CI-SKK3	228.8		200		295.0								
	LINE SKK1	CI-SKK1	CI-SKK2	236.6		295		294.6								
NK	LINE NK7	JOINT NK6	OUTLET NK	6.5						11.2						
	LINE NK6	CI-NK5	JOINT NK6	36.5						67.5						
	LINE NK5	JOINT NK5	CI-NK5	33.9						52.5						
	LAT NK5	JOINT NK4B	JOINT NK5	18.1		5		28.3								
	LINE NK3	JOINT NK3	JOINT NK5	102.8		60				112.0						
	LAT NK4B	JOINT NK4A	JOINT NK4B	25.3		34		34.0								
	LAT NK3B	GI-NK3B	JOINT NK3	14.8						20.0						
	LINE NK2	CI-NK2	JOINT NK3	13.9				30.5								
	LAT NK4	GI-NK4	JOINT NK4A	20.8		17		29.0								
	LAT NK4A	GI-NK4A	JOINT NK4A	4.4		7		7.0								
	LAT NK3A	GI-NK3A	GI-NK3B	8.8				7.3								
	LINE NK1	CI-NK1	CI-NK2	88.2				245.0								
SK	LINE SK3	CI-SK3	OUTLET SK	12.1				35.1								
	LINE SK2	CI-SK2	CI-SK3	30.6				145.0								
	LINE SK1	CI-SK1	CI-SK2	35.4				245.0								
NLL	LINE NLL6	CI-NLL6	OUTLET NLL	23.9				44.7								
	LINE NLL5	CI-NLL5	CI-NLL6	71.3				195.0								
	LINE NLL4	CI-NLL4	CI-NLL5	83.7				295.0								
	LINE NLL3	CI-NLL3	CI-NLL4	84.5				295.0								
	LINE NLL2	CI-NLL2	CI-NLL3	134.7				295.0								
	LINE NLL1	CI-NLL1	CI-NLL2	199.7		153		294.8								
SLL	LINE SLL6	CI-SLL6	OUTLET SLL	48.0		44		43.8								
	LINE SLL5	CI-SLL5	CI-SLL6	153.3		140		195.0								
	LINE SLL4	CI-SLL4	CI-SLL5	120.2				295.0								
	LINE SLL3	CI-SLL3	CI-SLL4	48.9				295.0								
	LINE SLL2	CI-SLL2	CI-SLL3	95.4				295.0								
	LINE SLL1	CI-SLL1	CI-SLL2	191.2				295.2								
NL	LINE NL4	CI-NL4	OUTLET NL	51.6				91.1								
	LINE NL3	CI-NL3	CI-NL4	69.4				175.0								
	LINE NL2	CI-NL2	CI-NL3	105.3		40		295.0								
	LINE NL1	CI-NL1	CI-NL2	38.7				265.0								
SL	LINE SL4	CI-SL4	OUTLET SL	87.5		92		92.0								
	LINE SL3	CI-SL3	CI-SL4	87.6				175.0								
	LINE SL2	CI-SL2	CI-SL3	73.7				295.0								
	LINE SL1	CI-SL1	CI-SL2	34.8				265.0								

* FOR CONTRACTOR'S INFORMATION ONLY

Texas Department of Transportation
© 2011

SH 289 DRAINAGE SUMMARY SHEET

SHEET 12 OF 13

DESIGN	FED. RD. DIV. NO.	STATE PROJECT NO.		HIGHWAY NO.
AMW	6	(SEE TITLE SHEET)		SH 289
GRAPHICS	STATE	DISTRICT	COUNTY	SHEET NO.
AMW	TEXAS	DALLAS	COLLIN	56
CHECK	CONTROL	SECTION	JOB	
NVS	0091	04	055	
CHECK				
NVS				

T:\DALDGN*A\SH 289 Celina\THE PLANS\Summary Sheets\drainagesummarysheets.dgn

R-201104-01

SUMMARY OF STORM SEWER ITEMS

NW. ID	LINE	FROM	TO	* STRUCT EXCAV (PIPE) (CY)	400 2005 CEMENT STABL BKFL (CY)	402 2001 TRENCH EXCAV PROTECT (LF)	464 2003 RC PIPE CL III 18" (LF)	464 2005 RC PIPE CL III 24" (LF)	464 2006 RC PIPE CL III 27" (LF)	464 2007 RC PIPE CL III 30" (LF)	464 2009 RC PIPE CL III 36" (LF)	464 2010 RC PIPE CL III 42" (LF)	464 2011 RC PIPE CL III 48" (LF)	462 2015 CONC BOX CULV 7' X 4' (LF)	462 2019 CONC BOX CULV 8' X 4' (LF)	462 2001 CONC BOX CULV 3' X 2' (LF)
NM	LINE NM6	CI-NM5	OUTLET NM	54.9		52		51.9								
	LINE NM5	CI-NM4	CI-NM5	309.4		295		295.1								
	LINE NM4	CI-NM3	CI-NM4	384.8		296		296.3								
	LINE NM3	CI-NM2	CI-NM3	333.9		270		270.3								
	LINE NM2	CI-NM1	CI-NM2	247.0		220		220.0								
	LINE NM1	EXIST CI-A1	CI-NM1	254.2		125		315.0								
SM	LINE SM7	CI-SM6	OUTLET SM	48.9		38		37.5								
	LINE SM6	CI-SM5	CI-SM6	176.2		165		165.0								
	LINE SM5	CI-SM4	CI-SM5	223.9		245		244.8								
	LINE SM4	CI-SM3	CI-SM4	334.6		294		293.7								
	LINE SM3	CI-SM2	CI-SM3	329.9		285		284.9								
	LINE SM2	CI-SM1	CI-SM2	191.7		220		255.0								
	LINE SM1	EXIST CI-B1	CI-SM1	110.7				215.0								
CELINA	LINE CSCLTD4	JOINT CSCLTD2	OUTLET CSCLTD	18.6		20		62.4								
	LINE CSCLTD3	JOINT CSCLTD1	JOINT CSCLTD2	27.3		20		47.8								
	LINE CSCLTD2	CI-CELINA SC LTD	JOINT CSCLTD1	8.2				20.7								
	LINE CSCLTD1	GI-CELINA SC LTD	CI-CELINA SC LTD	12.3				30.8								
	STORM SEWER DRAINAGE TOTAL			**27339 ***	**13**	**14897**	**17**	**27484**	**1119**	**5004**	**2125**	**413**	**598**	**376**	**405**	**867**

1 1 1

MANHOLE SUMMARY

MANHOLE ID	MANHOLE LOCATION					L (FT)	W (FT)	HT (FT)	465 2005 MANH (COMPL) TY M (EA)
MH NB2	60.48	FT	L	289PRO	311+71.34	4	4	5.00	1
MH NG1	43.80	FT	L	289PRO	373+98.48	4	4	8.13	1
MH NG2	44.36	FT	L	289PRO	375+78.47	4	4	8.22	1
MH SC1	44.71	FT	R	289PRO	343+09.07	4	4	8.33	1
MH SD1	43.86	FT	R	289PRO	373+97.11	4	4	7.40	1
MH SD2	43.68	FT	R	289PRO	375+89.48	4	4	7.49	1
CTC MH A	65.00	FT	L	289PRO	347+86.07	5	5	4.50	1
CTC MH B	66.00	FT	L	289PRO	344+09.80	5	5	5.73	1
EXIST CR98 30"	67.22	FT	L	289PRO	316+13.49	5	5	7.71	1
0091-04-055 TOTAL:									**9**

* FOR CONTRACTOR'S INFORMATION ONLY

1 Replaced 4/29/11 JB

Texas Department of Transportation
© 2011

SH 289 DRAINAGE SUMMARY SHEET

SHEET 13 OF 13

DESIGN	FED. RD. DIV. NO.	STATE PROJECT NO.		HIGHWAY NO.
AMW	6	(SEE TITLE SHEET)		SH 289
GRAPHICS AMW	STATE	DISTRICT	COUNTY	SHEET NO.
CHECK NVS	TEXAS	DALLAS	COLLIN	57
	CONTROL	SECTION	JOB	
CHECK NVS	0091	04	055	

ITEM 416 SIGNAL FOUNDATION SUMMARY

LOCATION	DRILLED SHAFT LENGTH		
	36" DIA TYPE A	48" DIA TYPE A	30" DIA RDWY ILL
	LF	LF	LF
SH 289 AT CR 53/ CR 88	52.0		
SH 289 AT FM 455	26.0	44.0	10.0
PROJECT TOTAL	78.0	44.0	10.0

ITEM 610 RDWY ILL POLE ASSEMBLY SUMMARY

LOCATION	(TY SA)50T-8(.4 KW)S
	EA.
SH 289 AT CR 53/ CR 88	
SH 289 AT FM 455	1
PROJECT TOTALS	1

ITEM 618 CONDUIT SUMMARY

LOCATION	TYPE				
	2" PVC	3" PVC	3" PVC BORED	4" PVC	4" PVC BORED
	LF	LF	LF	LF	LF
SH 289 AT CR 53/ CR 88	81.0	85.0	398.0		
SH 289 AT FM 455	55.0	91.0	402.0	26.0	135.0
PROJECT TOTALS	136.0	176.0	800.0	26.0	135.0

ITEM 620 ELECTRICAL CONDUCTOR SUMMARY

LOCATION	SIZE/TYPE		
	NO. 8 AWG BARE	NO. 8 AWG XHHW	NO. 12 AWG XHHW
	LF	LF	LF
SH 289 AT CR 53/ CR 88	564.0	590.0	160.0
SH 289 AT FM 455	709.0	820.0	240.0
PROJECT TOTALS	1273.0	1410.0	400.0

ITEM 624 GROUND BOX SUMMARY

LOCATION	TYPE A W/APRON	TYPE C W/APRON
	EA.	EA.
SH 289 AT CR 53/ CR 88	2	1
SH 289 AT FM 455	2	2
PROJECT TOTALS	4	3

ITEM 628 ELEC SERVICE SUMMARY

LOCATION	TY D 120/240 070 (NS)SS(E)GC(O)
	EA.
SH 289 AT CR 53/ CR 88	1
SH 289 AT FM 455	1
PROJECT TOTALS	2

ALUMINUM SIGNS SUMMARY

LOCATION	RELOCATE * R10-12	RELOCATE STREET * NAME SIGNS	R10-12 **	STREET ** NAME SIGNS
	EA.	EA.	EA.	EA.
SH 289 AT CR 53/ CR 88	2	4	2	4
SH 289 AT FM 455	2	4	2	4
PROJECT TOTALS	4	8	4	8

* SUBSIDIARY TO ITEM 681

** SUBSIDIARY TO ITEM 680

ITEM 680 INST OF HWY TRAF SIG SUMMARY

LOCATION	ISOLATED
	EA
SH 289 AT CR 53/ CR 88	1
SH 289 AT FM 455	1
PROJECT TOTAL	2

ITEM 681 INST OF TEMPORARY TRAF SIG SUMMARY

LOCATION	EA
SH 289 AT CR 53/ CR 88	1
SH 289 AT FM 455	1
PROJECT TOTAL	2

ITEM 682 SIGNAL SECTION SUMMARY

LOCATION	12" BACK PLATE			12" VEH SIGNAL W/ LED LAMP				
	3 HEAD	4 HEAD	5 HEAD	GRN ARW	GRN	YEL ARW	YEL	RED
	EA	EA	EA	EA	EA	EA	EA	EA
SH 289 AT CR 53/ CR 88	6	2	2	4	10	2	10	10
SH 289 AT FM 455	10	2	2	4	14	2	14	14
PROJECT TOTALS	16	4	4	8	24	4	24	24

ITEM 684 TRAFFIC SIGNAL CABLE SUMMARY

LOCATION	TYPE A			
	5 CNDR. 14 AWG	7 CNDR. 14 AWG	10 CNDR. 14 AWG	16 CNDR. 14 AWG
	LF	LF	LF	LF
SH 289 AT CR 53/ CR 88	528.0	250.0		667.0
SH 289 AT FM 455	436.0	260.0	850.0	899.0
PROJECT TOTALS	964.0	510.0	850.0	1566.0

ITEM 686 TRAFFIC SIGNAL POLE ASSEMBLIES

LOCATION	40' MAST ARM	44' MAST ARM	44' MAST ARM W/ LUMINAIRE ARM	48' MAST ARM	48' MAST ARM W/ LUMINAIRE ARM	60' MAST ARM W/ LUMINAIRE ARM	65' MAST ARM W/ LUMINAIRE ARM
	EA	EA	EA	EA	EA	EA	EA
SH 289 AT CR 53/ CR 88		1		1	2		
SH 289 AT FM 455	1		1			1	1
PROJECT TOTAL	1	1	1	1	2	1	1

ITEM 687 PEDESTAL POLE ASSEMBLY SUMMARY

LOCATION	PED POLE ASSEMBLY EA
SH 289 AT CR 53/ CR 88	4
SH 289 AT FM 455	4
PROJECT TOTAL	8

ITEM 8703 ACCESSIBLE PEDESTRIAN SIGNAL UNITS

LOCATION	EA
SH 289 AT CR 53/ CR 88	8
SH 289 AT FM 455	8
PROJECT TOTAL	16

ITEM 6006 SPREAD SPECTRUM RADIO SUMMARY

LOCATION	SSR RECEIVER	OMNIDIRECTIONAL ANTENNA	UNIDIRECTIONAL ANTENNA	COAXIAL CABLE
	EA	EA	EA	LF
SH 289 AT CR 53/ CR 88				60.0
SH 289 AT FM 455				
SPARE	2	1	1	
PROJECT TOTALS	2	1	1	60.0

ITEM 6007 REMOVING TRAFFIC SIGNALS SUMMARY

LOCATION	EA
SH 289 AT CR 53/ CR 88	1
SH 289 AT FM 455	1
PROJECT TOTAL	2

ITEM 6266 VIVDS EQUIPMENT SUMMARY **

LOCATION	COAXIAL CABLE
	LF
SH 289 AT CR 53/ CR 88	889.0
SH 289 AT FM 455	1704.0
SPARE	
PROJECT TOTAL	2593.0

** CONTRACTOR IS RESPONSIBLE FOR CLEANING AND RELOCATING CAMERAS

ITEM 8206 LED COUNTDOWN PED SIGNAL MODULE W/ HOUSING

LOCATION	EA
SH 289 AT FM CR 53/ CR 88	8
SH 289 AT FM 455	8
PROJECT TOTAL	16

Texas Department of Transportation
© 2011

SH 289 TRAFFIC SIGNALS PROJECT SUMMARY

SHEET 1 OF 1

DESIGN	FED. RD. DIV. NO.	FEDERAL AID PROJECT NO.		HIGHWAY NO.
JAB	6	(SEE TITLE SHEET)		SH 289
GRAPHICS JAB	STATE	DISTRICT	COUNTY	SHEET NO.
CHECK LDL	TEXAS	18	COLLIN	58
CHECK	CONTROL	SECTION	JOB	
APM	0091	04	055	

FILE: U:\US 289, 0091-04-055\SH 289 Project Summary.dgn

DISCLAIMER: The use of this standard is governed by the "Texas Engineering Practice Act". No warranty of any kind is made by TxDOT for any purpose whatsoever. TxDOT assumes no responsibility for the conversion of this standard to other formats or for incorrect results or damages resulting from its use.

DATE:
FILE:

SUMMARY OF SMALL SIGNS

SM RD SGN ASSM TY XXXXX(X)XX(X-XXXX)

Post Type: FRP = Fiberglass; TWT = Thin-Wall; 10BWG = 10 BWG; S80 = Sch 80

Posts (1 or 2)

Anchor Type: UA=Univer-Conc; UB=Univer-Bolt; SA=Slip-Conc; SB=Slip-Bolt; WS=Wedge Steel; WP=Wedge Plastic

Mounting Designation: P = Prefab. "Plain"; T = Prefab. "T"; U = Prefab. "U"; 1EXT or 2EXT = # of Ext.; BM = Extruded Wind Beam; WC = 1.12 #/ft Wing Chan.; EXAL= Extruded Aluminum

PLAN SHEET NO.	SIGN NO.	SIGN NOMENCLATURE	SIGN TEXT	DIMENSIONS	ALUMINUM TYPE A	ALUMINUM TYPE G	Post Type	Posts (1 or 2)	Anchor Type	Mounting Designation	
		M3-4	WEST	24" X 12"	X						
		M1-6F	455	24" X 24"	X						
1	1	M6-1	ARROW	21" X 15"	X						
		M3-2	EAST	24" X 12"	X		S80	1	SA	U	
		M1-6F	455	24" X 24"	X						
		M6-1	ARROW	21" X 15"	X						
		M3-2	EAST	24" X 12"	X						
		M1-6F	455	24" X 24"	X						
1	2	M6-1	ARROW	21" X 15"	X		S80	1	SA	U	
		M3-4	WEST	24" X 12"	X						
		M1-6F	455	24" X 24"	X						
		M6-1	ARROW	21" X 15"	X						
		M3-3	SOUTH	24" X 12"	X		10BWG	1	SA	P	
1	3	M1-6T	289	24" X 24"	X						
1	4	R2-1	SPEED LIMIT	24" X 30"	X		10BWG	1	SA	P	
1	5	D1-2	← Pilot Point Weston →	90" X 30"	X		S80	1	SA	U	BM
1	6	R1-1	STOP	36" X 36"	X		10BWG	1	SA	P	
1	7	R6-1R	ONE WAY	36" X 12"	X		10BWG	1	SA	P	
1	8	R6-1R	ONE WAY	36" X 12"	X		10BWG	1	SA	P	
1	9	D2-1	Prosper 5 Frisco 9	66" X 30"	X		10BWG	1	SA	U	
1	10	R1-1	STOP	36" X 36"	X		10BWG	1	SA	P	
		M2-1	JCT	24" X 18"	X		10BWG	1	SA	P	
2	1	M1-6F	455	24" X 24"	X						
2	2	R1-1	STOP	36" X 36"	X		10BWG	1	SA	P	
2	3	R1-1	STOP	36" X 36"	X		10BWG	1	SA	P	
3	1	R1-1	STOP	36" X 36"	X		10BWG	1	SA	P	
3	2	R1-1	STOP	36" X 36"	X		10BWG	1	SA	P	
3	3	R6-1R	ONE WAY	36" X 12"	X		10BWG	1	SA	P	
		M3-3	SOUTH	24" X 12"	X						
		M1-6T	289	24" X 24"	X						
		M6-1	ARROW	21" X 15"	X		S80	1	SA	U	
3	4	M3-1	NORTH	24" X 12"	X						
		M1-6T	289	24" X 24"	X						
		M6-1	ARROW	21" X 15"	X						
		M2-1	JCT	24" X 18"	X		10BWG	1	SA	P	
3	5	M1-6TB	BUSINESS	24" X 24"	X						
			289								
		M3-1	NORTH	24" X 12"	X						
		M1-6T	289	24" X 24"	X						
		M6-1	ARROW	21" X 15"	X		S80	1	SA	U	
4	1	M3-3	SOUTH	24" X 12"	X						
		M1-6T	289	24" X 24"	X						
		M6-1	ARROW	21" X 15"	X						

ALUMINUM SIGN BLANKS (TYPE A)

Square Ft.	Min. Thickness
Less than 7.5	0.080"
7.5 to 15	0.100"
Greater than 15	0.125"

Sign supports shall be located as shown on the plans, except that the Engineer may shift the sign supports within design guidelines, where necessary to secure a more desirable location or to avoid conflict with utilities. Unless otherwise shown on the plans, the Contractor shall stake and the Engineer will verify all sign support locations.

SHEET 1 OF 2

SUMMARY OF SMALL SIGNS

SOSS

© TxDOT May 1987

REVISIONS
DN:TxDOT 11-93 7-02
CK:TxDOT 8-95 2-07
DW:TxDOT 1-02 9-08
CK:TxDOT

DIST	COUNTY	SHEET NO.
18	COLLIN	59

CONT	SECT	JOB	HIGHWAY
0091	04	055	SH 289

18

R-201104-01

DA1
FILL

DISCLAIMER: The use of this standard is governed by the "Texas Engineering Practice Act". No warranty of any kind is made by TxDOT for any purpose whatsoever. TxDOT assumes no responsibility for the conversion of this standard to other formats or for incorrect results or damages resulting from its use.

SUMMARY OF SMALL SIGNS

SM RD SGN ASSM TY XXXXX(X)XX(X-XXXX)

Post Type: FRP = Fiberglass, TWT = Thin-Wall, 10BWG = 10 BWG, S80 = Sch 80

Posts (1 or 2)

Anchor Type: UA=Univer-Conc, UB=Univer-Bolt, SA=Slip-Conc, SB=Slip-Bolt, WS=Wedge Steel, WP=Wedge Plastic

Mounting Designation: P = Prefab. "Plain", T = Prefab. "T", U = Prefab. "U"

1EXT or 2EXT = # of Ext., BM = Extruded Wind Beam, WC = 1.12 #/ft Wing Chan., EXAL= Extruded Aluminum

PLAN SHEET NO.	SIGN NO.	SIGN NOMENCLATURE	SIGN TEXT	DIMENSIONS	ALUMINUM TYPE A	ALUMINUM TYPE G	Post Type	Posts (1 or 2)	Anchor Type	Mounting Designation	
4	2	R1-1	STOP	36" X 36"	X		10BWG	1	SA	P	
4	3	R1-1	STOP	36" X 36"	X		10BWG	1	SA	P	
4	4	R1-1	STOP	36" X 36"	X		10BWG	1	SA	P	
		M3-1	NORTH	24" X 12"	X		10BWG	1	SA	P	
4	5	M1-6T	289	24" X 24"	X						
		M3-3	SOUTH	24" X 12"	X		10BWG	1	SA	P	
4	6	M1-6T	289	24" X 24"	X						
4	7	R2-1	SPEED LIMIT	24" X 30"	X		10BWG	1	SA	P	
		M2-1	JCT	24" X 18"	X		10BWG	1	SA	P	
5	1	M1-6TB	BUSINESS	24" X 24"	X						
			289								
5	2	R2-1	SPEED LIMIT	24" X 30"	X		10BWG	1	SA	P	
6	1	D2-1	SPEED LIMIT	24" X 30"	X		10BWG	1	SA	P	
6	2	R2-1	Gunter 12	66" X 18"	X		10BWG	1	SA	T	
		M3-1	NORTH	24" X 12"	X		10BWG	1	SA	P	
7	1	M1-6T	289	24" X 24"	X						
		M3-3	SOUTH	24" X 12"	X						
		M1-6T	289	24" X 24"	X						
7	2	M6-1	ARROW	21" X 15"	X						
		M3-1	NORTH	24" X 12"	X		S80	1	SA	U	
		M1-6T	289	24" X 24"	X						
		M6-1	ARROW	21" X 15"	X						
		M3-1	NORTH	24" X 12"	X						
		M1-6T	289	24" X 24"	X						
7	3	M6-1	ARROW	21" X 15"	X						
		M3-3	SOUTH	24" X 12"	X		S80	1	SA	U	
		M1-6T	289	24" X 24"	X						
		M6-1	ARROW	21" X 15"	X						
		M3-3	SOUTH	24" X 12"	X		10BWG	1	SA	P	
7	4	M1-6T	289	24" X 24"	X						
7	5	R2-1	SPEED LIMIT	24" X 30"	X		10BWG	1	SA	P	
8	1	R1-1	STOP	36" X 36"	X		10BWG	1	SA	P	
		M3-3	SOUTH	24" X 12"	X						
		M1-6T	289	24" X 24"	X						
8	2	M6-1	ARROW	21" X 15"	X		S80	1	SA	U	
		M3-1	NORTH	24" X 12"	X						
		M1-6T	289	24" X 24"	X						
		M6-1	ARROW	21" X 15"	X						
9	1	R2-1	SPEED LIMIT	24" X 30"	X		10BWG	1	SA	P	
9	2	M3-1	NORTH	24" X 12"	X		10BWG	1	SA	P	
		M1-6T	289	24" X 24"	X						
9	3	R1-1	STOP	36" X 36"	X		10BWG	1	SA	P	
		M3-3	SOUTH	24" X 12"	X						
		M1-6T	289	24" X 24"	X						
9	4	M6-1	ARROW	21" X 15"	X		S80	1	SA	U	
		M3-1	NORTH	24" X 12"	X						
		M1-6T	289	24" X 24"	X						
		M6-1	ARROW	21" X 15"	X						
		M3-3	SOUTH	24" X 12"	X		10BWG	1	SA	P	
10	1	M1-6T	289	24" X 24"	X						
10	2	R2-1	SPEED LIMIT	24" X 30"	X		10BWG	1	SA	P	

ALUMINUM SIGN BLANKS (TYPE A)

Square Ft.	Min. Thickness
Less than 7.5	0.080"
7.5 to 15	0.100"
Greater than 15	0.125"

Sign supports shall be located as shown on the plans, except that the Engineer may shift the sign supports, within design guidelines, where necessary to secure a more desirable location or to avoid conflict with utilities, obstructions, or otherwise shown on the plans. The Contractor shall stake and the Engineer will verify all sign support locations.

© TxDOT May 1987

DN:-TxDOT 11-93 7-02
CK:-TxDOT 8-95 2-07
DW:-TxDOT 1-02 9-08
CK:-TxDOT REVISIONS

SUMMARY OF SMALL SIGNS

SOSS

SHEET 2 OF 2

DIST	CONT	SECT	JOB	HIGHWAY
18	0091	04	055	SH 289

COUNTY	SHEET NO.
COLLIN	60

18

R-201104-01

DATE: 4/11/2011 2:36:01 PM
FILE: U:\US 289, 0091-04-055\SUMS08.dgn

DISCLAIMER: Use of this standard is governed by the "Texas Engineering Practice Act". No warranty of any kind is made by TxDOT for any purpose whatsoever. TxDOT assumes no responsibility for the conversion of this standard to other formats or for incorrect results or damages resulting from its use.

SUMMARY OF SMALL SIGNS

SM RD SGN ASSM TY XXXXX(X)XX(X-XXXX)

Post Type: FRP = Fiberglass; TWT = Thin-Wall; 10BWG = 10 BWG; S80 = Sch 80

Posts (1 or 2)

Anchor Type: UA=Univer-Conc; UB=Univer-Bolt; SA=Slip-Conc; SB=Slip-Bolt; WS=Wedge Steel; WP=Wedge Plastic

Mounting Designation: P = Prefab. "Plain"; T = Prefab. "T"; U = Prefab. "U"; 1EXT or 2EXT = # of Ext.; BM = Extruded Wind Beam; WC = 1.12 #/ft Wing Chan.; EXAL= Extruded Aluminum

PLAN SHEET NO.	SIGN NO.	SIGN NOMENCLATURE	SIGN TEXT	DIMENSIONS	ALUMINUM TYPE A	ALUMINUM TYPE G	Post Type	Posts (1 or 2)	Anchor Type	Mounting Designation	
			SH 289 AT CR 53/ CR 88 TEMPORARY SIGNALS								
	A	R10-12**	LEFT TURN YIELD ON GREEN 2 EA	24" X 30"	X				RELOCATE TO SPAN T1-T2 AND T3-T4		
	B	**	SINGLE STREET NAME SIGNS, 4 EA. TO BE RELOCATED FROM EXISTING SPANS						RELOCATE TO SPAN T1-T2, T2-T3, T3-T4 AND T4-T1		
			SH 289 AT CR 53/ CR 88 PERMANENT SIGNALS								
	A	R10-12*	LEFT TURN YIELD ON GREEN 2 EA	24" X 30"	X				MOUNT ON P3 AND P7 MAST ARMS		
	C	*	TEXAS 289 Preston Rd 2300 2200 1 EA	130" X 24"	X				MOUNT ON POLE P1		
	D	*	TEXAS 289 Preston Rd 2200 2300 1 EA	130" X 24"	X				MOUNT ON POLE P5		
	E	*	← 100 County Rd 53 County Rd 88 100 → 1 EA	112" X 24"	X				MOUNT ON POLE P3		
	F	*	← 100 County Rd 88 County Rd 53 100 → 1 EA	110" X 24"	X				MOUNT ON POLE P7		
	G	R10-3eL ***	4 EA	9" X 15"	X				MOUNT ON POLES P1, P3, P5, AND P7		
	H	R10-3eR ***	4 EA	9" X 15"	X				MOUNT ON POLES P2, P4, P6, AND P8		
			SH 289 AT FM 455/ PECAN ST TEMPORARY SIGNALS								
	A	R10-12**	LEFT TURN YIELD ON GREEN 2 EA	24" X 30"	X				RELOCATE TO SPAN T1-T2 AND T3-T4		
	B	**	SINGLE STREET NAME SIGNS, 4 EA. TO BE RELOCATED FROM EXISTING SPANS						RELOCATE TO SPAN T1-T2, T2-T3, T3-T4 AND T4-T1		

*SUBSIDIARY TO ITEM 680
**SUBSIDIARY TO ITEM 681
***SUBSIDIARY TO ITEM 8703

ALUMINUM SIGN BLANKS (TYPE A)

Square Ft.	Min. Thickness
Less than 7.5	0.080"
7.5 to 15	0.100"
Greater than 15	0.125"

Sign supports shall be located as shown on the plans, except that the Engineer may shift the sign supports, within design guidelines, where necessary to secure a more desirable location or to avoid conflict with utilities. Unless otherwise shown on the plans, the Contractor shall stake and the Engineer will verify all sign support locations.

SUMMARY OF SMALL SIGNS FOR TRAFFIC SIGNALS SOSS

© TxDOT May 1987

REVISIONS

DN: TxDOT
CK: TxDOT
DW: TxDOT
CK: TxDOT

DIST	COUNTY	HIGHWAY	CONT	SECT	JOB
18	COLLIN	SH 289	0091	04	055

SHEET 1 OF 2

SHEET NO. (2)

TR

R-201104-01

DISCLAIMER: The use of this standard is governed by the "Texas Engineering Practice Act". No warranty of any kind is made by TxDOT for any purpose whatsoever. TxDOT assumes no responsibility for the conversion of this standard to other formats or for incorrect results or damages resulting from its use.

DATE: 4/11/2011 2:36:04 PM
FILE: U:\US 289, 0091-04-055\SUMS08.dgn

SUMMARY OF SMALL SIGNS

SM RD SGN ASSM TY XXXXX(X)XX(X-XXXX)

Post Type: FRP = Fiberglass; TWT = Thin-Wall; 10BWG = 10 BWG; S80 = Sch 80

Posts (1 or 2)

Anchor Type: UA=Univer-Conc; UB=Univer-Bolt; SA=Slip-Conc; SB=Slip-Bolt; WS=Wedge Steel; WP=Wedge Plastic

Mounting Designation: P = Prefab. "Plain"; T = Prefab. "T"; U = Prefab. "U"; 1EXT or 2EXT = # of Ext.; BM = Extruded Wind Beam; WC = 1.12 #/ft Wing Chan.; EXAL= Extruded Aluminum

PLAN SHEET NO.	SIGN NO.	SIGN NOMENCLATURE	SIGN TEXT	DIMENSIONS	ALUMINUM TYPE A	ALUMINUM TYPE G	Post Type	Posts (1 or 2)	Anchor Type	Mounting Designation
			SH 289 AT FM 455/ PECAN ST PERMANENT SIGNALS							
	A	R10-12*	LEFT TURN YIELD ON GREEN 2 EA	24" X 30"	X				MOUNT ON P3 AND P7 MAST ARMS	
	I	*	TEXAS 289 S Preston Rd N 100 100 1 EA	148" X 24"	X				MOUNT ON POLE P9	
	J	*	TEXAS 289 N Preston Rd S 100 100 1 EA	148" X 24"	X				MOUNT ON POLE P5	
	K	*	← 800 Pecan St FM 455 900 → 1 EA	72" X 24"	X				MOUNT ON POLE P3	
	L	*	← 900 FM 455 Pecan St 800 → 1 EA	70" X 24"	X				MOUNT ON POLE P7	
	G	R10-3eL***	4 EA	9" X 15"	X				MOUNT ON POLES P3, P5, P7, AND P9	
	H	R10-3eR***	4 EA	9" X 15"	X				MOUNT ON POLES P2, P4, P6, AND P8	

*SUBSIDIARY TO ITEM 680
**SUBSIDIARY TO ITEM 681
***SUBSIDIARY TO ITEM 8703

ALUMINUM SIGN BLANKS (TYPE A)

Square Ft.	Min. Thickness
Less than 7.5	0.080"
7.5 to 15	0.100"
Greater than 15	0.125"

Sign supports shall be located as shown on the plans, except that the Engineer may shift the sign supports, within design guidelines, where necessary to secure a more desirable location or to avoid conflict with utilities. Unless otherwise shown on the plans, the Contractor shall stake and the Engineer will verify all sign support locations.

© TxDOT May 1987

DN: TxDOT
CK: TxDOT
DW: TxDOT
CK: TxDOT

REVISIONS

SUMMARY OF SMALL SIGNS FOR TRAFFIC SIGNALS
SOSS

SHEET 2 OF 2

DIST	CONT	SECT	JOB	HIGHWAY
18	0091	04	055	SH 289

COUNTY: COLLIN

SHEET NO. 102

1A

R-201104-01

SH 289 SB PHASE I: CONSTRUCTION

1. PLACE ADVANCE WARNING SIGNS TO BE USED FOR THE DURATION OF THE PROJECT.

2. INSTALL SW3P FOR PHASE I.

3. BUILD TEMPORARY PAVEMENT "DETOUR A" BEFORE THE START OF PHASE I. SEE PHASE I TRAFFIC CONTROL PLAN FOR LOCATIONS.

4. RELOCATE EXISTING TRAFFIC SIGNALS AT FM 455/PECAN ST. AND CR 88/CR 53 AND INSTALL TEMPORARY SIGNALS.

5. INSTALL TRAFFIC CONTROL DEVICES AND PLACE WORK ZONE PAVEMENT MARKINGS FOR PHASE I. EXISTING PAVEMENT MARKINGS TO REMAIN DURING PHASE I EXCEPT WHERE NOTED IN THE PLANS OR WHERE MARKINGS ARE WORN, PROVIDE WORK ZONE PAVEMENT MARKINGS AS NEEDED.

6. PERFORM REMOVAL OPERATIONS IN PHASE I WORK ZONE SHOWN IN THE PLANS.

7. CONSTRUCT SOUTHBOUND CONCRETE PAVEMENT LANES, INCLUDING CURBS, GRADING, DRAINAGE, TRAFFIC CONDUITS, PULL BOXES, CURB AND GUTTERS WITHIN CONSTRUCTION ZONE SHOWN IN THE PLANS.

8. CONSTRUCT DOWNSTREAM SECTION OF CULVERTS AS SHOWN IN CULVERT PHASE OF TCP TYPICAL SECTIONS.

9. BUILD TEMPORARY PAVEMENT "DETOUR B" BEFORE THE START OF PHASE II. SEE PHASE I TRAFFIC CONTROL PLAN FOR LOCATIONS.

SH 289 NB PHASE II: CONSTRUCTION

1. INSTALL TRAFFIC CONTROL DEVICES AND PLACE WORK ZONE PAVEMENT MARKINGS FOR PHASE II.

2. ALTER TEMPORARY TRAFFIC SIGNALS AT FM 455/PECAN ST. AND CR 88/CR 53 TO ACCOMMODATE PHASE II OPERATIONS.

3. RE-ROUTE TRAFFIC TO NEW SB PAVEMENT BUILT IN PHASE I.

4. BUILD TEMPORARY DETOUR FOR DRIVEWAY/CROSS STREET ACCESS AS SHOWN.

5. INSTALL SW3P FOR PHASE II.

6. REMOVE TEMPORARY "DETOUR A" PAVEMENT AND PERFORM REMOVAL OPERATIONS IN PHASE II WORK ZONE AREA SHOWN IN THE PLANS.

7. CONSTRUCT NORTHBOUND CONCRETE PAVEMENT LANES, AND SOUTHBOUND TURN LANES SHOWN IN PHASE II TCP SHEETS INCLUDING CURBS, GRADING, DRAINAGE, TRAFFIC CONDUITS, PULL BOXES, CURB AND GUTTERS WITHIN CONSTRUCTION ZONE SHOWN IN THE PLANS.

8. CONSTRUCT UPSTREAM SECTION OF CULVERTS AS SHOWN IN CULVERT PHASE OF TCP TYPICAL SECTIONS.

SH 289 PHASE III: CONSTRUCTION

1. REMOVE TRAFFIC BARRIERS AND PLACE TEMPORARY TRAFFIC CONTROL DEVICES FOR PHASE III CONSTRUCTION.

2. REMOVE TEMPORARY "DETOUR B" PAVEMENT PRIOR TO PHASE III CONSTRUTION.

3. CONSTRUCT MEDIAN AREA AS SHOWN IN TCP FOR PHASE III.

4. PLACE TOPSOIL AND SOD FOR PERMANENT EROSION CONTROL.

5. REMOVE ALL APPLICABLE CONSTRUCTION MARKINGS AND PLACE PERMANENT PAVEMENT MARKINGS AS SHOWN IN PLANS.

6. REMOVE TRAFFIC CONTROL DEVICES, ADVANCED WARNING SIGNS, SW3P, AND COMPLETE REMAINING ITEMS INCLUDING GENERAL CLEANUP.

STORM SEWERS

1. ALL STORM SEWER WORK SHALL BE DONE WITH THE PHASE INDICATED IN THE TCP. INLETS WILL BE CONSTRUCTED AS TWO STAGE INLETS TO PROVIDE TEMPORARY DRAINAGE:

SOUTHBOUND STORM SEWER WILL BE BUILT DURING PHASE I.
NORTHBOUND STORM SEWER WILL BE BUILT DURING PHASE II.

2. DOWNSTREAM SECTIONS OF STORM SEWER SHALL BE CONSTRUCTED FIRST WHILE MAINTAINING ACCESS TO DRIVEWAYS AND CROSS STREETS.

3. INSTALL PLUGS IN STORM SEWER INLETS OR PIPES TO PREVENT MUD FROM ENTERING THE STORM SEWER SYSTEM TO ADJOINING PROJECTS/ TIEIN LOCATION CURRENTLY UNDER CONSTRUCTION OR TO BE CONSTRUCTED.

DRIVEWAYS & INTERSECTIONS

1. CONSTRUCT DRIVEWAYS AND INTERSECTIONS AS SHOWN IN THE PLANS OR AS APPROVED BY THE ENGINEER. ACCESS TO ABBUTTING PROPERTIES SHALL BE MAINTAINED AND OPEN AT ALL TIMES.

2. SEE TCP DETAILS FOR TYPICAL DRIVEWAYS AND INTERSECTIONS AT MAJOR CROSS STREETS.

3. SEE FM 455/ PECAN ST. & CR 53 / CR 88 INTERSECTION TRAFFIC CONTROL PLAN FOR PHASE I & II.

4. VARIOUS INTERSECTIONS AND DRIVEWAYS ARE DESIGNATED AS A RENTAL CHARGE LOCATION. SEE SPECIAL PROVISION ITEM 008 " PROSECUTION AND PROGRESS". ALSO SEE GENERAL NOTES FOR LOCATION, IMPACT DAYS, AND RENTAL CHARGES.

5. TO EXPEDITE CONSTRUCTION OF SIDE STREETS AT NON-SIGNALIZED INTERSECTIONS, 4 INCHES OF TY B HMAC (PG 64-22) MAY BE SUBSTITUTED FOR 8 INCHES OF LIME TREATED SUBGRADE OR FLEX BASE AS SHOWN ON THE TYPICAL SECTIONS. THIS WILL BE PAID FOR UNDER ITEM 340-2011. EXTRA EXCAVATION OR EMBANKMENT (IF REQUIRED) WILL BE PAID FOR UNDER THE APPROPRIATE BID ITEMS.

△2 Replaced 7/5/11 SB

STATE OF TEXAS
NICHOLAS VON SPENCER
93702
LICENSED PROFESSIONAL ENGINEER

Signature of Registrant , P.E. & Date 7-5-11

Texas Department of Transportation
© 2011

TRAFFIC CONTROL PLAN PHASE NARRATIVE

DESIGN	FED. RD. DIV. NO.	STATE PROJECT NO.		HIGHWAY NO.
AMW	6	SEE TITLE SHEET		SH 289
GRAPHICS AMW	STATE	DISTRICT	COUNTY	SHEET NO.
CHECK NVS	TEXAS	DALLAS	COLLIN	63
CHECK NVS	CONTROL	SECTION	JOB	
	0091	04	055	

R-201104-01

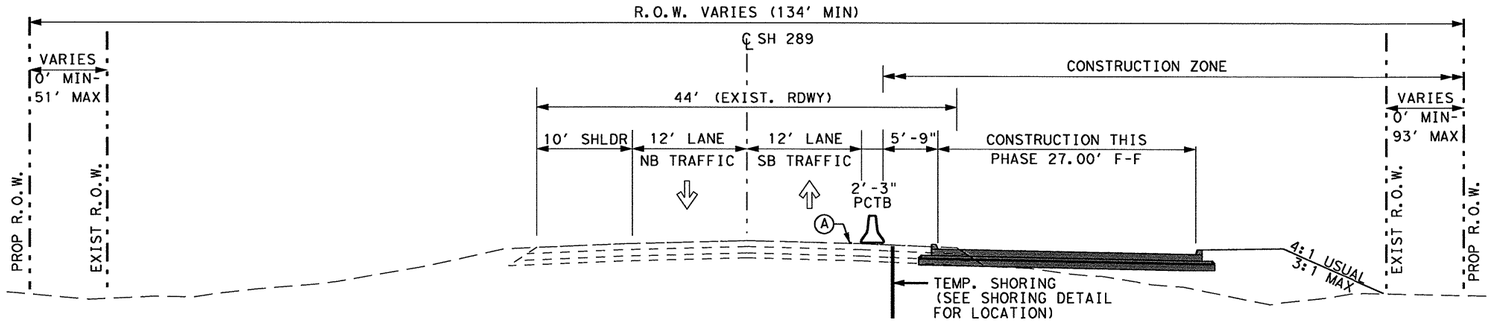

TYPICAL SECTION - PHASE I CONSTRUCTION

STA 311+00.00 TO STA 336+00.00
STA 351+30.00 TO STA 367+00.00
STA 383+00.00 TO STA 513+00.00

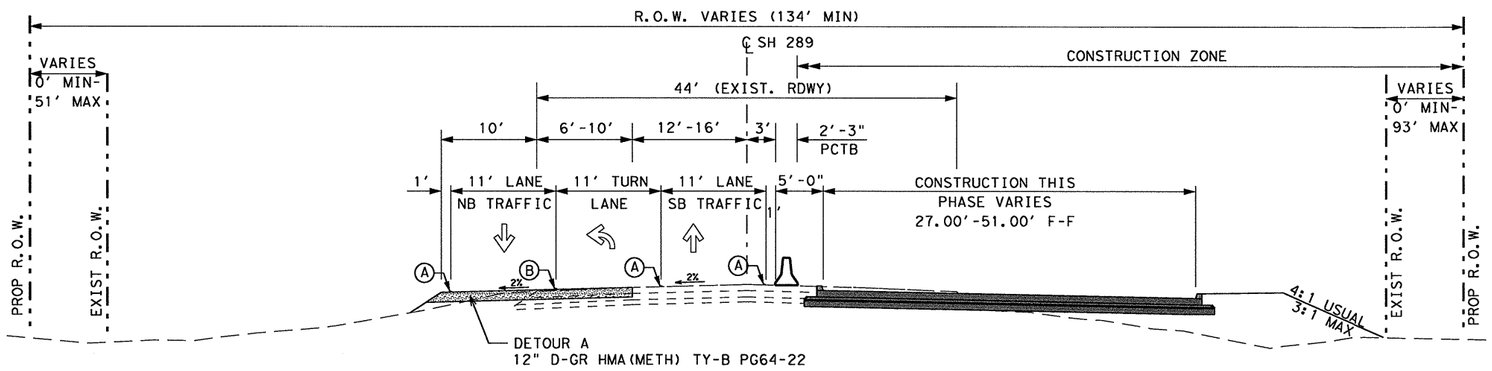

TYPICAL SECTION - PHASE I CONSTRUCTION

STA 303+05.00 TO STA 306+00.00
STA 336+00.00 TO STA 345+00.00
STA 375+50.00 TO STA 379+00.00

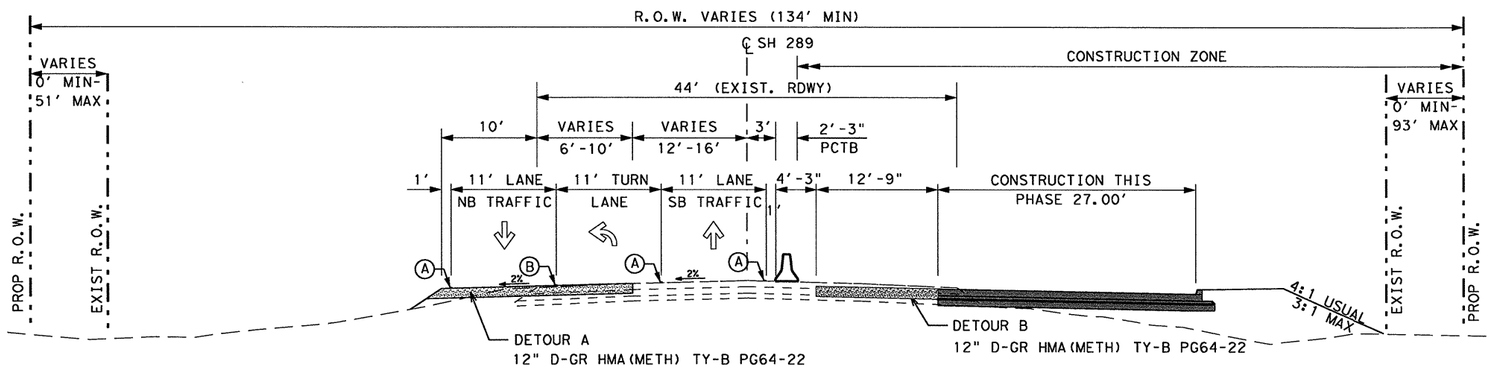

TYPICAL SECTION - PHASE I CONSTRUCTION

STA 306+00.00 TO STA 311+00.00
STA 345+00.00 TO STA 351+30.00
STA 367+00.00 TO STA 375+50.00
STA 379+00.00 TO STA 383+00.00

- PAVEMENT CONSTRUCTION THIS PHASE
- PAVEMENT CONSTRUCTION PREVIOUS PHASE
- TEMPORARY ASPHALT PAVEMENT THIS PHASE
- TEMPORARY ASPHALT PAVEMENT PREVIOUS PHASE
- (A) WK ZN PAV MRK. REMOV (W) 4" (SLD)
- (B) WK ZN PAV MRK. REMOV (Y) 4" (SLD W/MRKR)

STATE OF TEXAS
NICHOLAS VON SPENCER
93702
LICENSED PROFESSIONAL ENGINEER

Nicholas V Spencer, P.E. 4-8-11
Signature of Registrant & Date

Texas Department of Transportation
© 2011

SH 289
TRAFFIC CONTROL PLAN
TYPICAL SECTIONS
PHASE I

SCALE: NTS SHEET 1 OF 6

DESIGN	FED. RD. DIV. NO.	STATE PROJECT NO.		HIGHWAY NO.
AMW	6	(SEE TITLE SHEET)		SH 289
GRAPHICS	STATE	DISTRICT	COUNTY	SHEET NO.
AMW	TEXAS	DALLAS	COLLIN	64
CHECK	CONTROL	SECTION	JOB	
NVS	0091	04	055	
CHECK				
NVS				

3:26:29 PM 4/7/2011

T:\DALDCN\A\SH 289 Collin\THE PLANS\Traffic Control\TCP\Typs.dgn

R-201104-01

PAVEMENT CONSTRUCTION THIS PHASE
PAVEMENT CONSTRUCTION PREVIOUS PHASE
TEMPORARY ASPHALT PAVEMENT THIS PHASE
TEMPORARY ASPHALT PAVEMENT PREVIOUS PHASE
(A) WK ZN PAV MRK. REMOV (W) 4" (SLD)
(B) WK ZN PAV MRK. REMOV (Y) 4" (SLD W/MRKR)

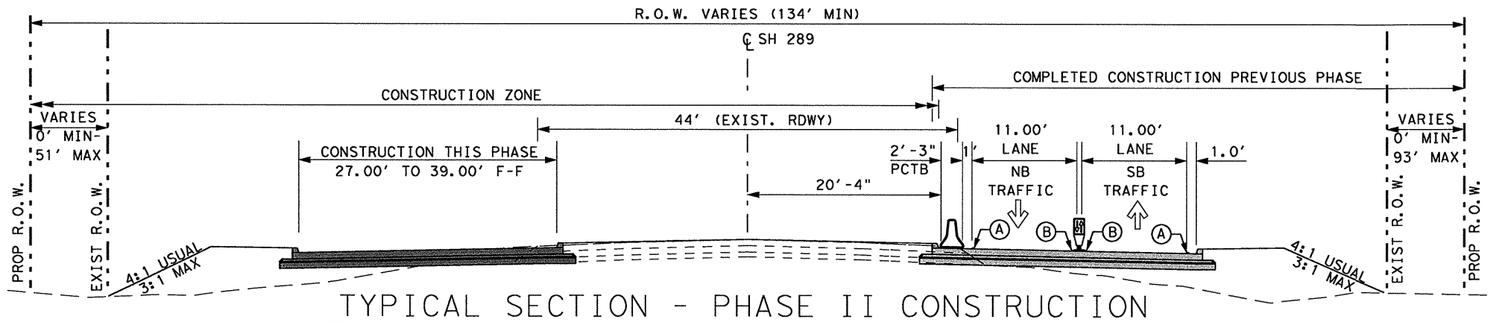

TYPICAL SECTION - PHASE II CONSTRUCTION

STA 311+00.00 TO STA 320+00.00
STA 326+00.00 TO STA 339+00.00
STA 351+30.00 TO STA 369+00.00
STA 383+00.00 TO STA 413+70.00
STA 420+00.00 TO STA 440+30.00
STA 446+00.00 TO STA 467+40.00
STA 473+60.00 TO STA 494+25.00
STA 499+25.00 TO STA 519+00.00

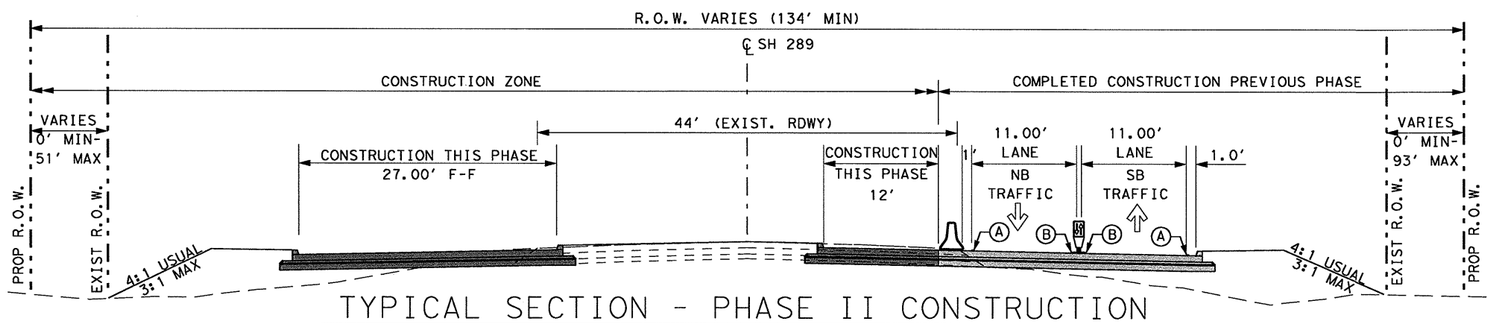

TYPICAL SECTION - PHASE II CONSTRUCTION

STA 320+00.00 TO STA 326+00.00
STA 413+70.00 TO STA 420+00.00
STA 440+30.00 TO STA 446+00.00
STA 467+40.00 TO STA 473+60.00
STA 494+25.00 TO STA 499+25.00

STATE OF TEXAS
NICHOLAS VON SPENCER
93702
LICENSED
PROFESSIONAL ENGINEER

Nicholas V Spencer, P.E. 4-8-11
Signature of Registrant & Date

Texas Department of Transportation
© 2011

SH 289
TRAFFIC CONTROL PLAN
TYPICAL SECTIONS
PHASE II

SCALE: NTS
SHEET 2 OF 6

DESIGN	FED. RD. DIV. NO.	STATE PROJECT NO.		HIGHWAY NO.
AMW	6	(SEE TITLE SHEET)		SH 289
GRAPHICS	STATE	DISTRICT	COUNTY	SHEET NO.
AMW	TEXAS	DALLAS	COLLIN	65
CHECK	CONTROL	SECTION	JOB	
NVS	0091	04	055	
CHECK				
NVS				

3:26:55 PM
4/7/2011

R-201104-01

- PAVEMENT CONSTRUCTION THIS PHASE
- PAVEMENT CONSTRUCTION PREVIOUS PHASE
- TEMPORARY ASPHALT PAVEMENT THIS PHASE
- TEMPORARY ASPHALT PAVEMENT PREVIOUS PHASE
- (A) WK ZN PAV MRK. REMOV (W) 4" (SLD)
- (B) WK ZN PAV MRK. REMOV (Y) 4" (SLD W/MRKR)

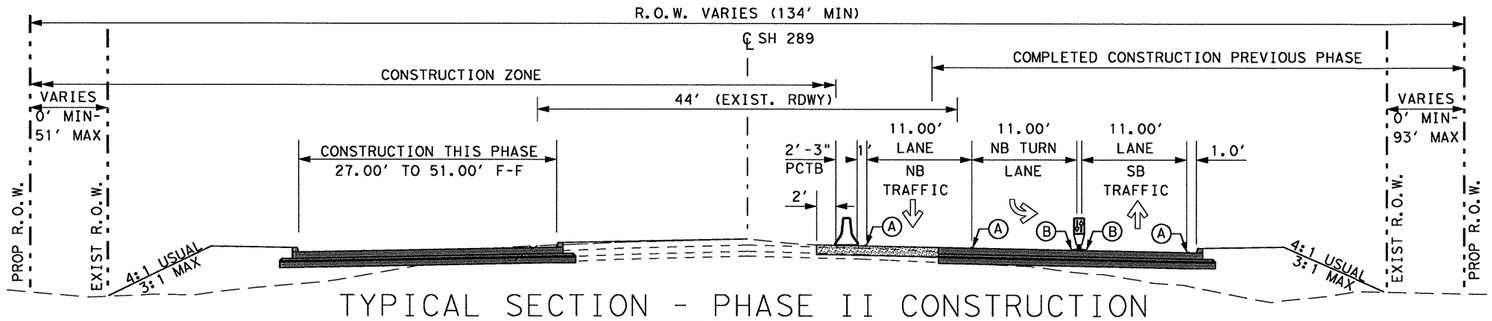

TYPICAL SECTION - PHASE II CONSTRUCTION

STA 306+00.00 TO STA 311+00.00
STA 345+00.00 TO STA 351+30.00
STA 369+00.00 TO STA 372+00.00

STA 373+30.00 TO STA 375+50.00
STA 379+00.00 TO STA 383+00.00

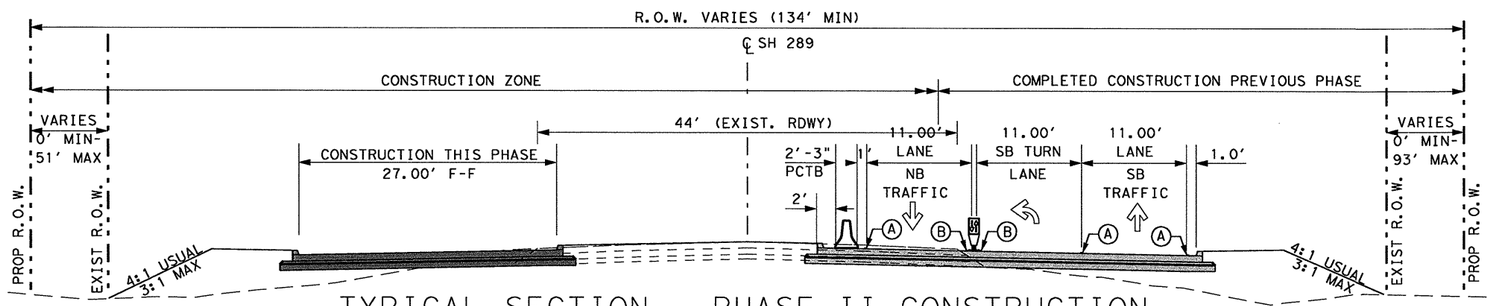

TYPICAL SECTION - PHASE II CONSTRUCTION

STA 303+05.00 TO STA 306+00.00
STA 339+00.00 TO STA 345+00.00
STA 375+50.00 TO STA 378+00.00

STATE OF TEXAS
NICHOLAS VON SPENCER
93702
LICENSED PROFESSIONAL ENGINEER

Nicholas V Spencer, P.E. 4-8-11
Signature of Registrant & Date

Texas Department of Transportation
© 2011

SH 289
TRAFFIC CONTROL PLAN
TYPICAL SECTIONS
PHASE II

SCALE: NTS — SHEET 3 OF 6

DESIGN	FED. RD. DIV. NO.	STATE PROJECT NO.		HIGHWAY NO.
AMW	6	(SEE TITLE SHEET)		SH 289
GRAPHICS	STATE	DISTRICT	COUNTY	SHEET NO.
AMW	TEXAS	DALLAS	COLLIN	66
CHECK	CONTROL	SECTION	JOB	
NVS	0091	04	055	
CHECK				
NVS				

3:26:38 PM
4/7/2011

R-201104-01

PAVEMENT CONSTRUCTION THIS PHASE
PAVEMENT CONSTRUCTION PREVIOUS PHASE
TEMPORARY ASPHALT PAVEMENT THIS PHASE
TEMPORARY ASPHALT PAVEMENT PREVIOUS PHASE
(A) WK ZN PAV MRK. REMOV (W) 4" (SLD)
(B) WK ZN PAV MRK. REMOV (Y) 4" (SLD W/MRKR)

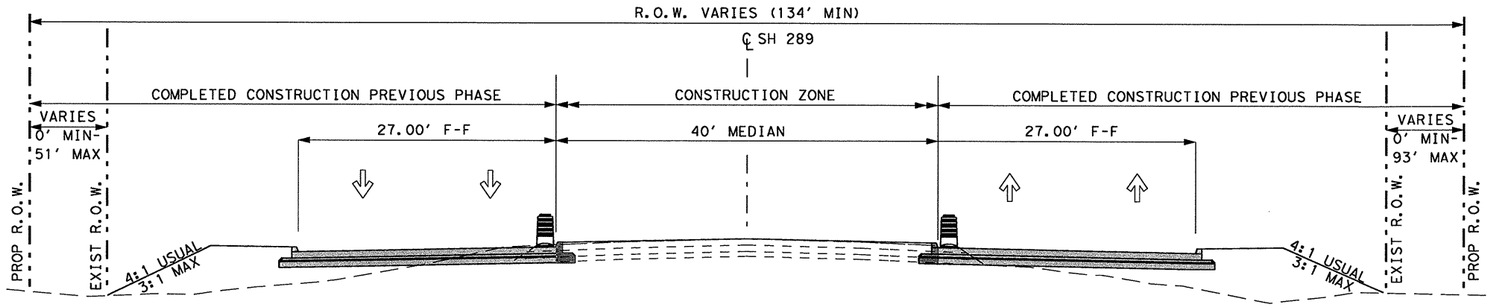

TYPICAL SECTION - PHASE III CONSTRUCTION

STA 360+00.00 TO STA 372+00.00

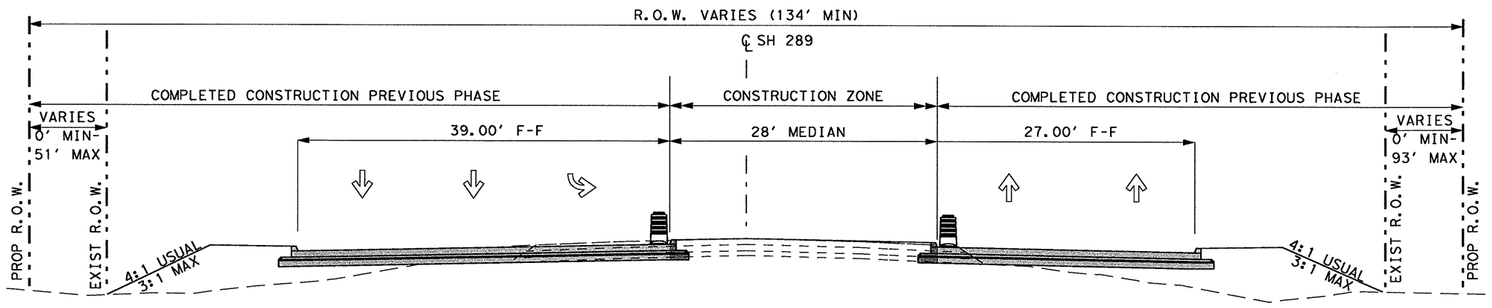

TYPICAL SECTION - PHASE III CONSTRUCTION

STA 306+00.00 TO STA 311+00.00
STA 345+00.00 TO STA 351+30.00
STA 373+30.00 TO STA 375+50.00
STA 379+00.00 TO STA 383+00.00

STATE OF TEXAS
NICHOLAS VON SPENCER
93702
LICENSED
PROFESSIONAL ENGINEER

Nicholas V Spencer P.E. 4-8-11
Signature of Registrant & Date

Texas Department of Transportation
© 2011

SH 289
TRAFFIC CONTROL PLAN
TYPICAL SECTIONS
PHASE III

SCALE: NTS
SHEET 4 OF 6

DESIGN	FED. RD. DIV. NO.	STATE PROJECT NO.		HIGHWAY NO.
AMW	6	(SEE TITLE SHEET)		SH 289
GRAPHICS	STATE	DISTRICT	COUNTY	SHEET NO.
AMW	TEXAS	DALLAS	COLLIN	67
CHECK	CONTROL	SECTION	JOB	
NVS	0091	04	055	
CHECK				
NVS				

4/7/2011 3:26:42 PM

R-201104-01

PAVEMENT CONSTRUCTION THIS PHASE
PAVEMENT CONSTRUCTION PREVIOUS PHASE
TEMPORARY ASPHALT PAVEMENT DETOUR B
TEMPORARY ASPHALT PAVEMENT DETOUR A
Ⓐ WK ZN PAV MRK. REMOV (W) 4" (SLD)
Ⓑ WK ZN PAV MRK. REMOV (Y) 4" (SLD W/MRKR)

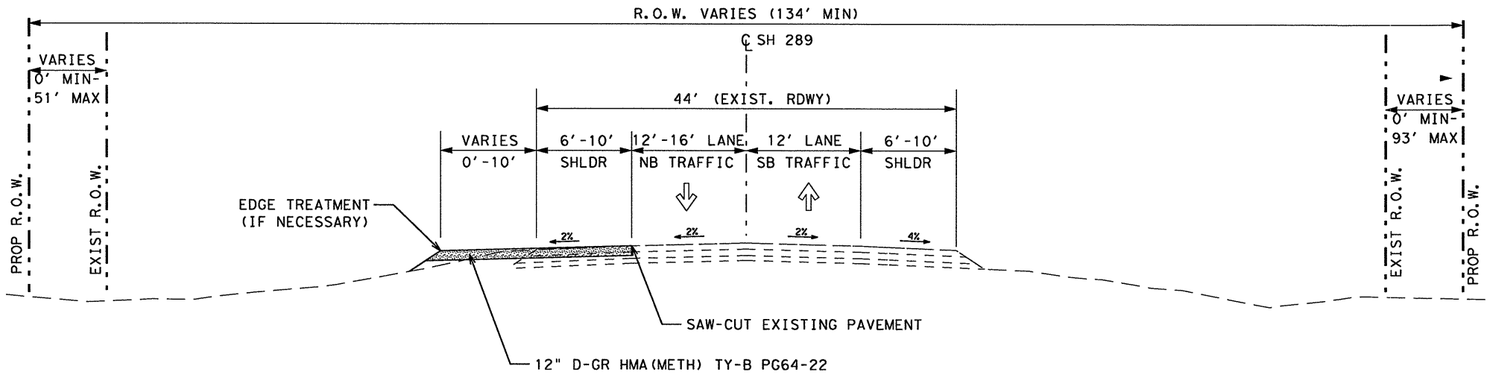

TYPICAL SECTION - DETOUR A

STA 295+00.00 TO STA 304+00.00
STA 305+50.00 TO STA 310+00.00
STA 336+00.00 TO STA 343+50.00
STA 344+50.00 TO STA 347+00.00
STA 367+00.00 TO STA 377+50.00
STA 378+50.00 TO STA 383+00.00

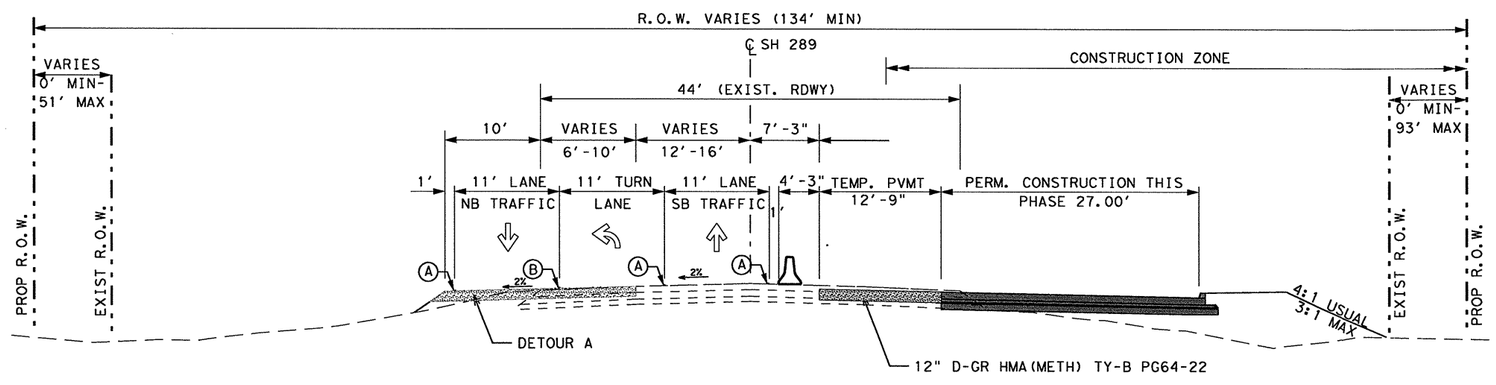

TYPICAL SECTION - DETOUR B

STA 305+70.00 TO STA 311+00.00
STA 345+00.00 TO STA 351+30.00
STA 369+00.00 TO STA 372+00.00
STA 373+30.00 TO STA 375+50.00
STA 379+00.00 TO STA 383+00.00

STATE OF TEXAS
NICHOLAS VON SPENCER
93702
LICENSED PROFESSIONAL ENGINEER

Nicholas V Spencer, P.E. 4-8-11
Signature of Registrant & Date

Texas Department of Transportation
© 2011

SH 289
TRAFFIC CONTROL PLAN
TYPICAL SECTIONS
DETOURS

SCALE: NTS
SHEET 5 OF 6

DESIGN	FED. RD. DIV. NO.	STATE PROJECT NO.		HIGHWAY NO.
AMW	6	(SEE TITLE SHEET)		SH 289
GRAPHICS	STATE	DISTRICT	COUNTY	SHEET NO.
AMW	TEXAS	DALLAS	COLLIN	68
CHECK	CONTROL	SECTION	JOB	
NVS	0091	04	055	
CHECK				
NVS				

4/7/2011 3:26:16 PM

R-201104-01

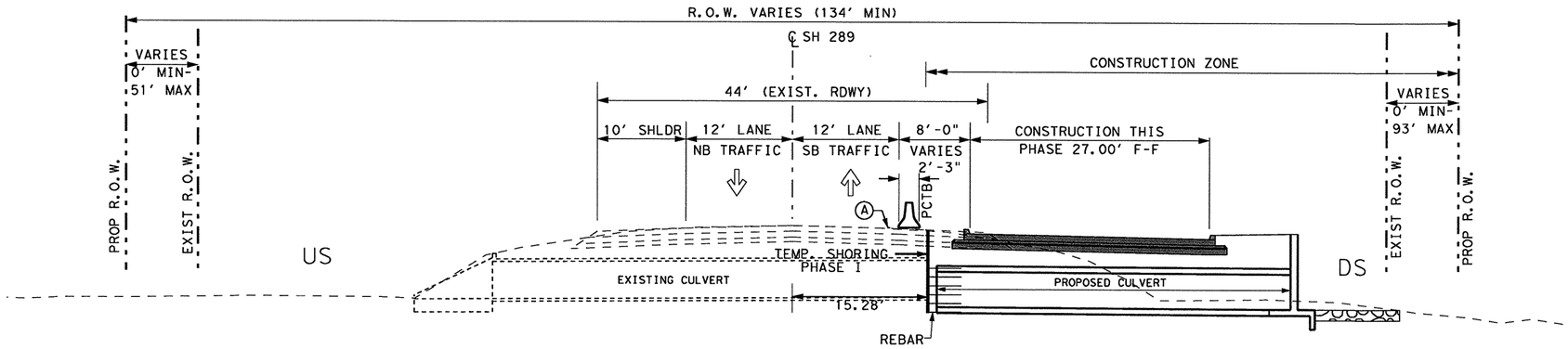

TYPICAL SECTION - CULVERT PHASE I CONSTRUCTION
BUILD DOWNSTREAM SIDE

NOTE:

1. CONTRACTOR REQUIRED TO MAINTAIN POSITIVE DRAINAGE DURING CONSTRUCTION AT ALL TIMES.

2. SEE CULVERT LAYOUTS FOR LIMITS.

3. SEE TEMPORARY SHORING DETAIL FOR SHORING LOCATIONS.

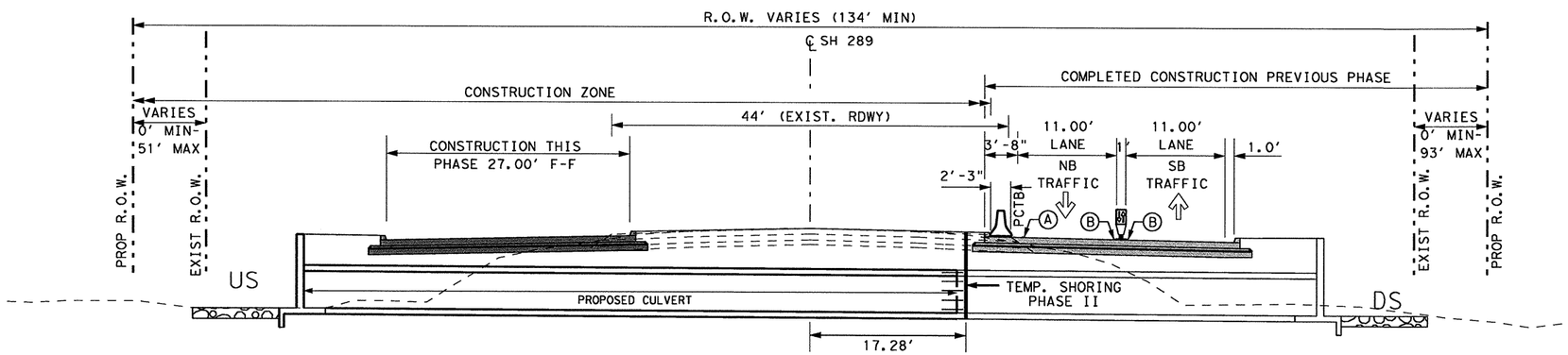

TYPICAL SECTION - CULVERT PHASE II CONSTRUCTION
BUILD UPSTREAM SIDE

STATE OF TEXAS
NICHOLAS VON SPENCER
93702
LICENSED
PROFESSIONAL ENGINEER

Nicholas V Spencer, P.E. 4-8-11
Signature of Registrant & Date

Texas Department of Transportation
© 2011

SH 289
TRAFFIC CONTROL PLAN
TYPICAL SECTIONS
CULVERT PHASE

SCALE: NTS — SHEET 6 OF 6

DESIGN	FED. RD. DIV. NO.	STATE PROJECT NO.		HIGHWAY NO.
AMW	6	(SEE TITLE SHEET)		SH 289
GRAPHICS	STATE	DISTRICT	COUNTY	SHEET NO.
AMW	TEXAS	DALLAS	COLLIN	69
CHECK	CONTROL	SECTION	JOB	
NVS	0091	04	055	
CHECK				
NVS				

3:26:49 PM
4/7/2011

R-201104-01

4/7/2011 3:27:16 PM

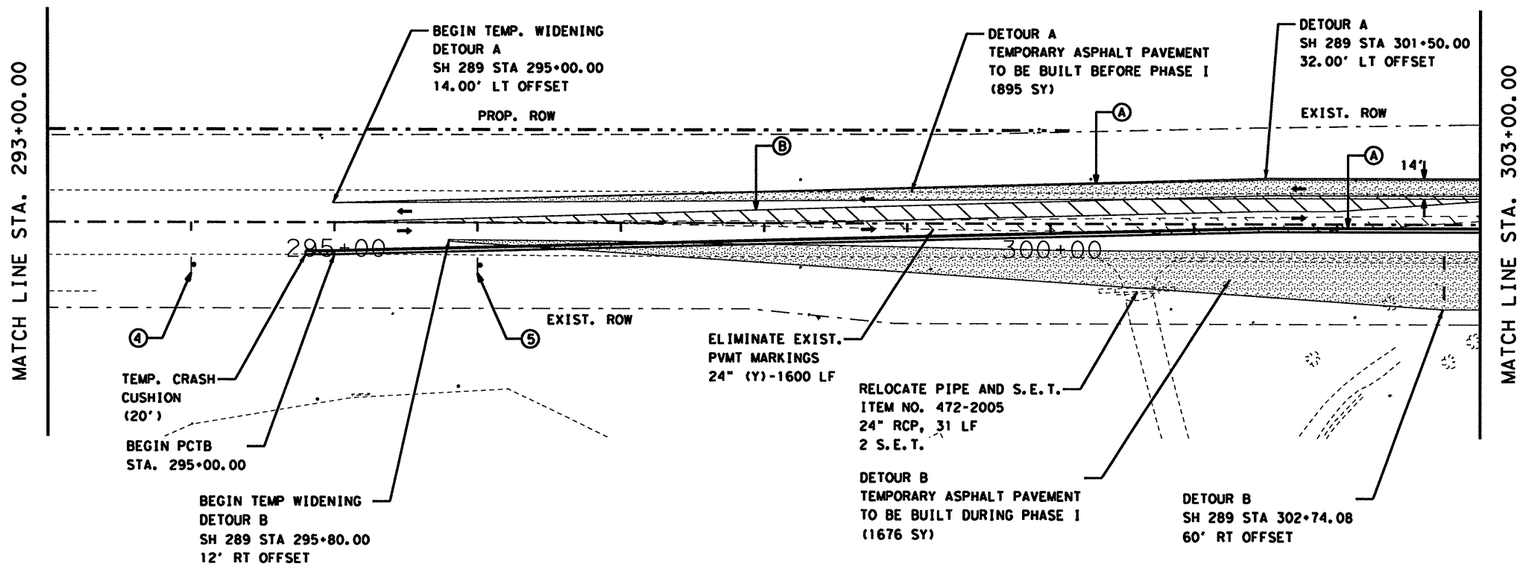

LEGEND

- CONSTRUCTION ZONE THIS PHASE
- PHASE CONSTRUCTION FOR MAJOR INTERSECTIONS
- PAVEMENT CONSTRUCTION THIS PHASE
- PAVEMENT CONSTRUCTION PREVIOUS PHASE
- TEMPORARY ASPHALT PAVEMENT
- PORTABLE CONCRETE TRAFFIC BARRIER (PCTB)
- TEMPORARY CRASH CUSHION
- CHANNELIZATION DEVICES
- TYPE III BARRICADE
- SIGN
- TEMPORARY TRAFFIC
- (A) WK ZN PAV MRK. REMOV (W) 4" (SLD)
- (B) WK ZN PAV MRK. REMOV (Y) 4" (SLD W/MRKR)

NOTES:

1. SEE PROJECT LAYOUT SHEETS FOR ADVANCE WARNING AND SIGN PLACEMENT.

2. EXISTING PAVEMENT MARKINGS TO REMAIN DURING PHASE I, EXCEPT WHERE NOTED IN THE PLANS OR WHERE MARKINGS ARE WORN. PROVIDE WORK ZONE PAVEMENT MARKINGS AS NEEDED.

3. THE CONTRACTOR IS REQUIRED TO PROVIDE ACCESS TO PRIVATE PROPERTY AND INTERSECTING ROADWAYS AT ALL TIMES.

4. THE CONTRACTOR IS REQUIRED TO MAINTAIN POSITIVE DRAINAGE DURING CONSTRUCTION.

5. SEE MISCELLANEOUS TCP DETAILS FOR TYPICAL DRIVEWAYS AND UNSIGNALIZED INTERSECTIONS.

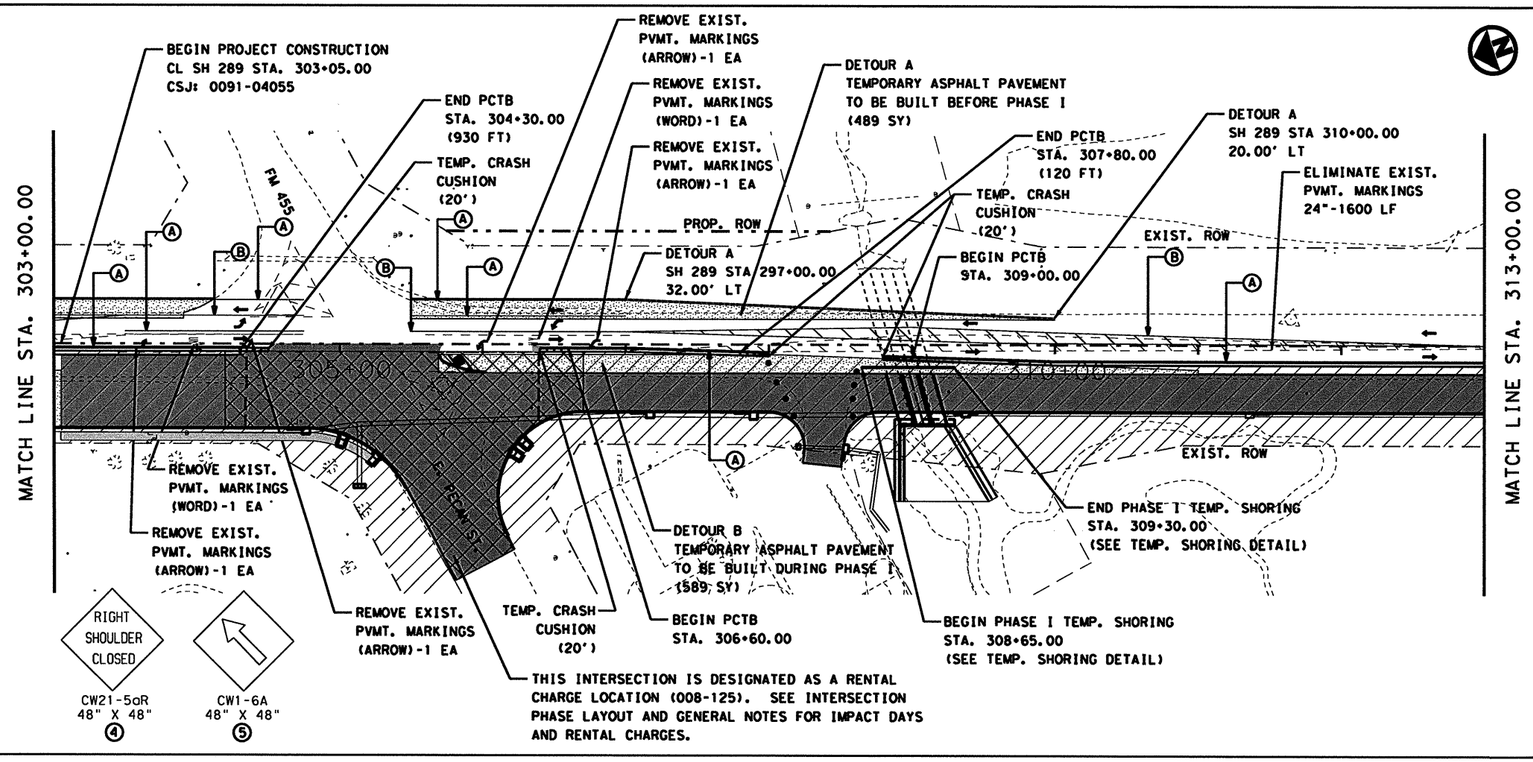

STATE OF TEXAS
NICHOLAS VON SPENCER
93702
LICENSED
PROFESSIONAL ENGINEER

Nicholas V Spencer, P.E. 4-8-11
Signature of Registrant & Date

Texas Department of Transportation
© 2011

SH 289
TRAFFIC CONTROL PLAN
PHASE I

SCALE: 1"=100' SHEET 1 OF 12

DESIGN	FED. RD. DIV. NO.	STATE PROJECT NO.		HIGHWAY NO.
AMW	6	(SEE TITLE SHEET)		SH 289
GRAPHICS AMW	STATE	DISTRICT	COUNTY	SHEET NO.
CHECK NVS	TEXAS	DALLAS	COLLIN	70
CHECK NVS	CONTROL	SECTION	JOB	
	0091	04	055	

T:\DALDGN*A\SH 289 Celina\THE PLANS\Traffic Control\Phase I\tcp*phase1*1.dgn

4/7/2011 3:27:26 PM

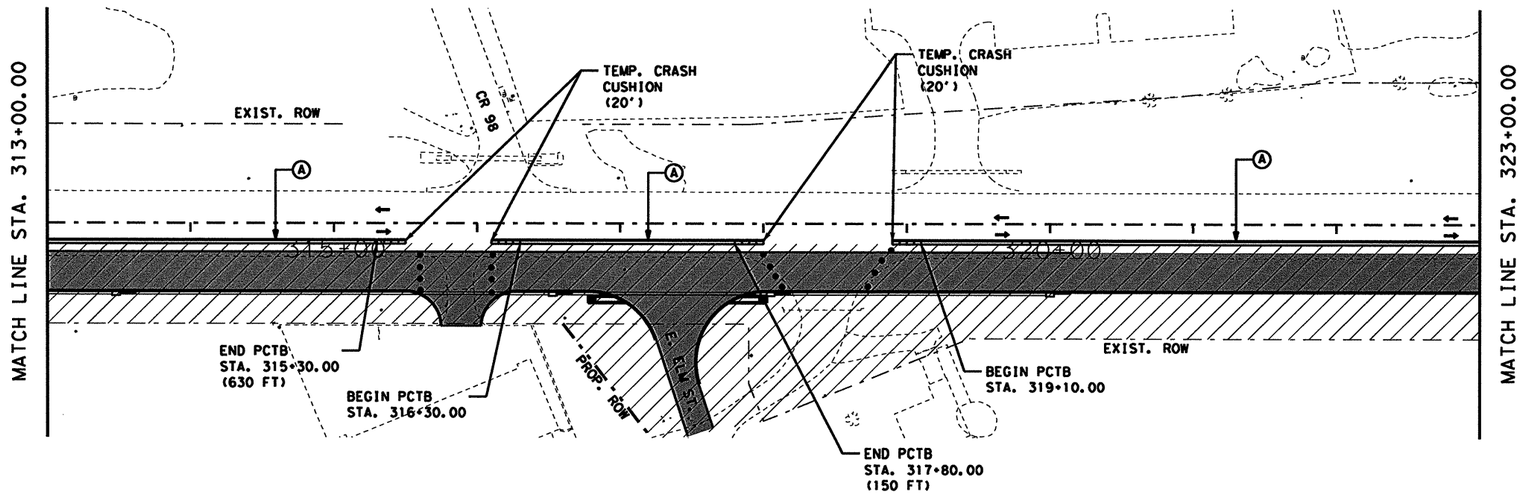

LEGEND

- CONSTRUCTION ZONE THIS PHASE
- PHASE CONSTRUCTION FOR MAJOR INTERSECTIONS
- PAVEMENT CONSTRUCTION THIS PHASE
- PAVEMENT CONSTRUCTION PREVIOUS PHASE
- TEMPORARY ASPHALT PAVEMENT
- PORTABLE CONCRETE TRAFFIC BARRIER (PCTB)
- TEMPORARY CRASH CUSHION
- CHANNELIZATION DEVICES
- TYPE III BARRICADE
- SIGN
- TEMPORARY TRAFFIC
- (A) WK ZN PAV MRK. REMOV (W) 4" (SLD)
- (B) WK ZN PAV MRK. REMOV (Y) 4" (SLD W/MRKR)

NOTES:

1. SEE PROJECT LAYOUT SHEETS FOR ADVANCE WARNING AND SIGN PLACEMENT.

2. EXISTING PAVEMENT MARKINGS TO REMAIN DURING PHASE I, EXCEPT WHERE NOTED IN THE PLANS OR WHERE MARKINGS ARE WORN. PROVIDE WORK ZONE PAVEMENT MARKINGS AS NEEDED.

3. THE CONTRACTOR IS REQUIRED TO PROVIDE ACCESS TO PRIVATE PROPERTY AND INTERSECTING ROADWAYS AT ALL TIMES.

4. THE CONTRACTOR IS REQUIRED TO MAINTAIN POSITIVE DRAINAGE DURING CONSTRUCTION.

5. SEE MISCELLANEOUS TCP DETAILS FOR TYPICAL DRIVEWAYS AND UNSIGNALIZED INTERSECTIONS.

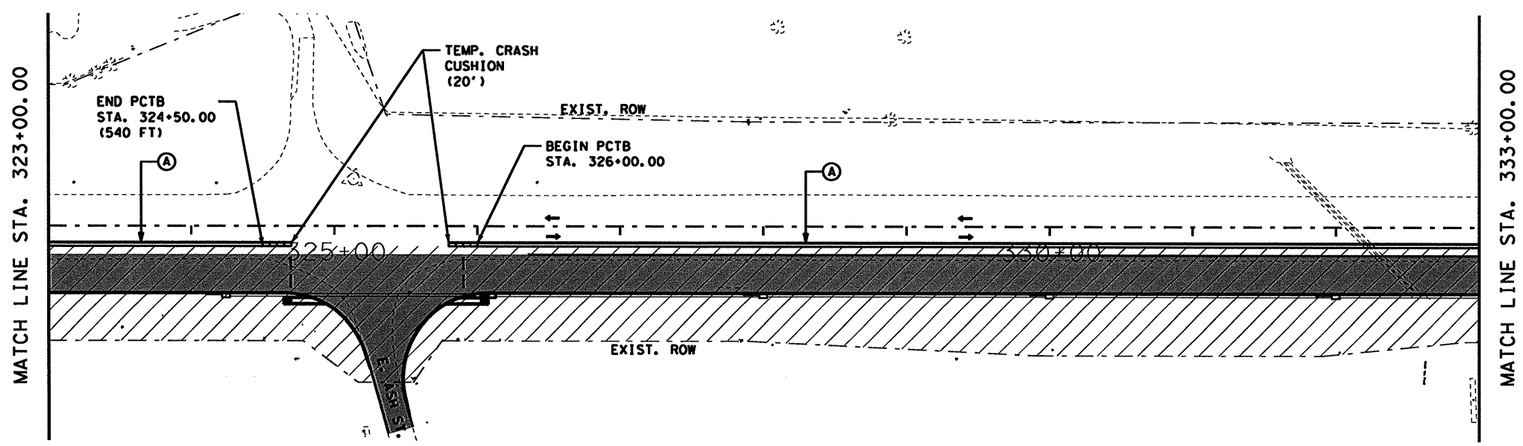

STATE OF TEXAS
NICHOLAS VON SPENCER
93702
LICENSED
PROFESSIONAL ENGINEER

Nicholas V Spencer, P.E. 4-8-11
Signature of Registrant & Date

Texas Department of Transportation
© 2011

SH 289 TRAFFIC CONTROL PLAN PHASE I

SCALE: 1"=100'

SHEET 2 OF 12

DESIGN	FED. RD. DIV. NO.	STATE PROJECT NO.		HIGHWAY NO.
AMW	6	(SEE TITLE SHEET)		SH 289
GRAPHICS AMW	STATE	DISTRICT	COUNTY	SHEET NO.
CHECK NVS	TEXAS	DALLAS	COLLIN	71
CHECK NVS	CONTROL	SECTION	JOB	
	0091	04	055	

T:\DALDGN*A\SH 289 Celina\THE PLANS\Traffic Control\Phase I\tcp*phase1*2.dgn

4/7/2011 3:27:39 PM

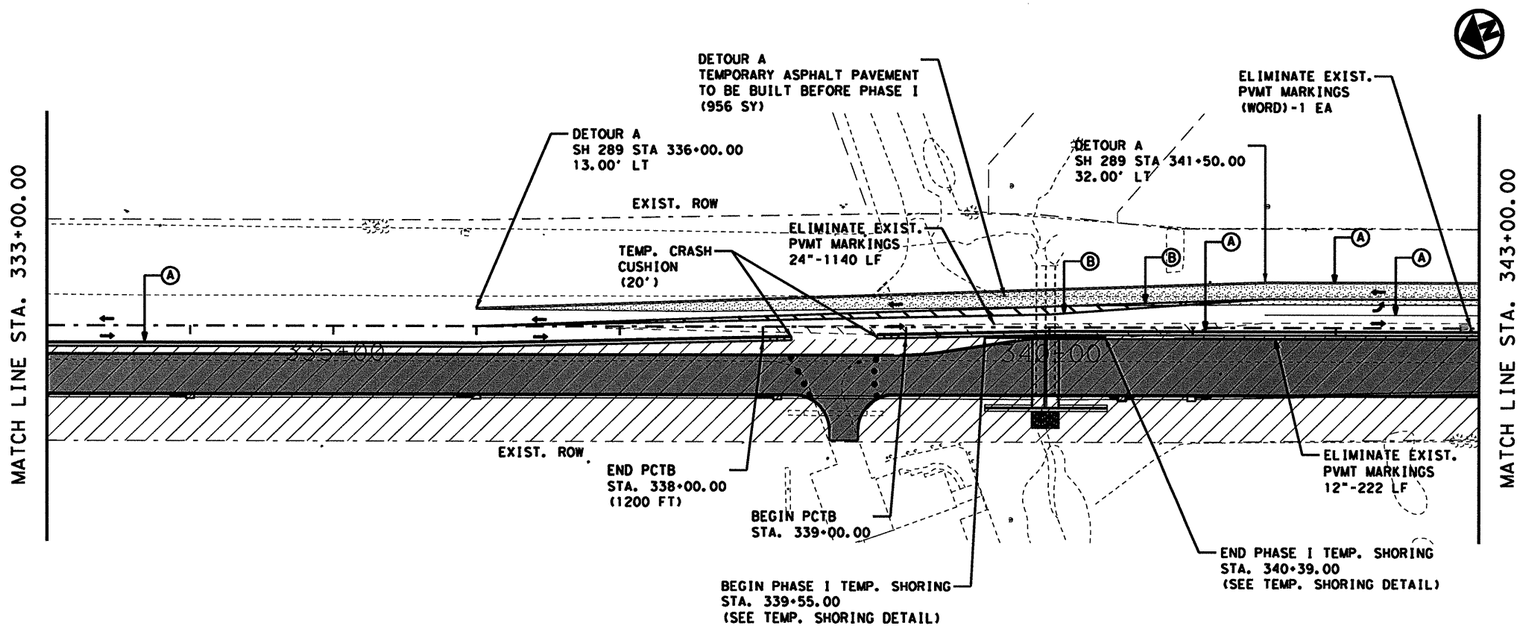

LEGEND

- CONSTRUCTION ZONE THIS PHASE
- PHASE CONSTRUCTION FOR MAJOR INTERSECTIONS
- PAVEMENT CONSTRUCTION THIS PHASE
- PAVEMENT CONSTRUCTION PREVIOUS PHASE
- TEMPORARY ASPHALT PAVEMENT
- PORTABLE CONCRETE TRAFFIC BARRIER (PCTB)
- TEMPORARY CRASH CUSHION
- CHANNELIZATION DEVICES
- TYPE III BARRICADE
- SIGN
- TEMPORARY TRAFFIC
- (A) WK ZN PAV MRK. REMOV (W) 4" (SLD)
- (B) WK ZN PAV MRK. REMOV (Y) 4" (SLD W/MRKR)

NOTES:

1. SEE PROJECT LAYOUT SHEETS FOR ADVANCE WARNING AND SIGN PLACEMENT.

2. EXISTING PAVEMENT MARKINGS TO REMAIN DURING PHASE I, EXCEPT WHERE NOTED IN THE PLANS OR WHERE MARKINGS ARE WORN. PROVIDE WORK ZONE PAVEMENT MARKINGS AS NEEDED.

3. THE CONTRACTOR IS REQUIRED TO PROVIDE ACCESS TO PRIVATE PROPERTY AND INTERSECTING ROADWAYS AT ALL TIMES.

4. THE CONTRACTOR IS REQUIRED TO MAINTAIN POSITIVE DRAINAGE DURING CONSTRUCTION.

5. SEE MISCELLANEOUS TCP DETAILS FOR TYPICAL DRIVEWAYS AND UNSIGNALIZED INTERSECTIONS.

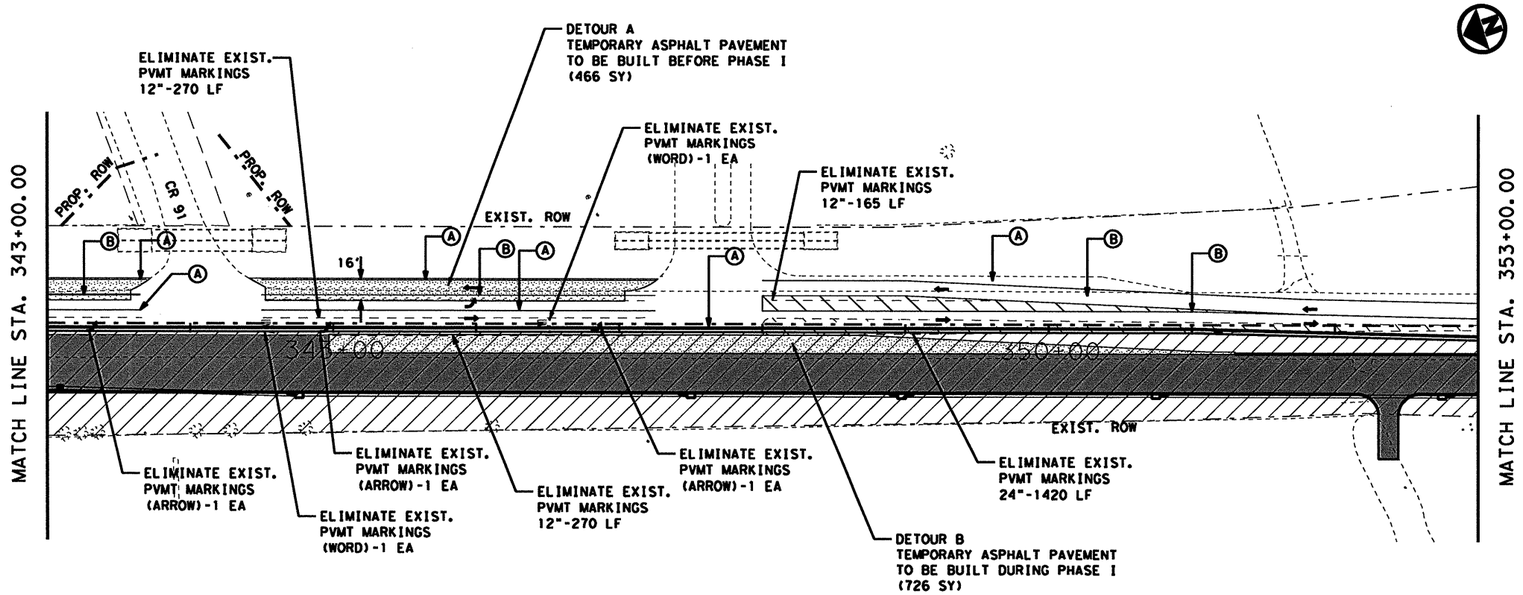

STATE OF TEXAS
NICHOLAS VON SPENCER
93702
LICENSED PROFESSIONAL ENGINEER

Nicholas V Spencer, P.E. 4-8-11
Signature of Registrant & Date

Texas Department of Transportation
© 2011

SH 289
TRAFFIC CONTROL PLAN
PHASE I

SCALE: 1"=100' SHEET 3 OF 12

DESIGN	FED.RD. DIV.NO.	STATE PROJECT NO.		HIGHWAY NO.
AMW	6	(SEE TITLE SHEET)		SH 289
GRAPHICS	STATE	DISTRICT	COUNTY	SHEET NO.
AMW	TEXAS	DALLAS	COLLIN	72
CHECK	CONTROL	SECTION	JOB	
NVS	0091	04	055	
CHECK				
NVS				

T:\DALDGN\#A\SH 289 Celina\THE PLANS\Traffic Control\Phase I\tcp#phase1#3.dgn

4/7/2011 3:27:51 PM

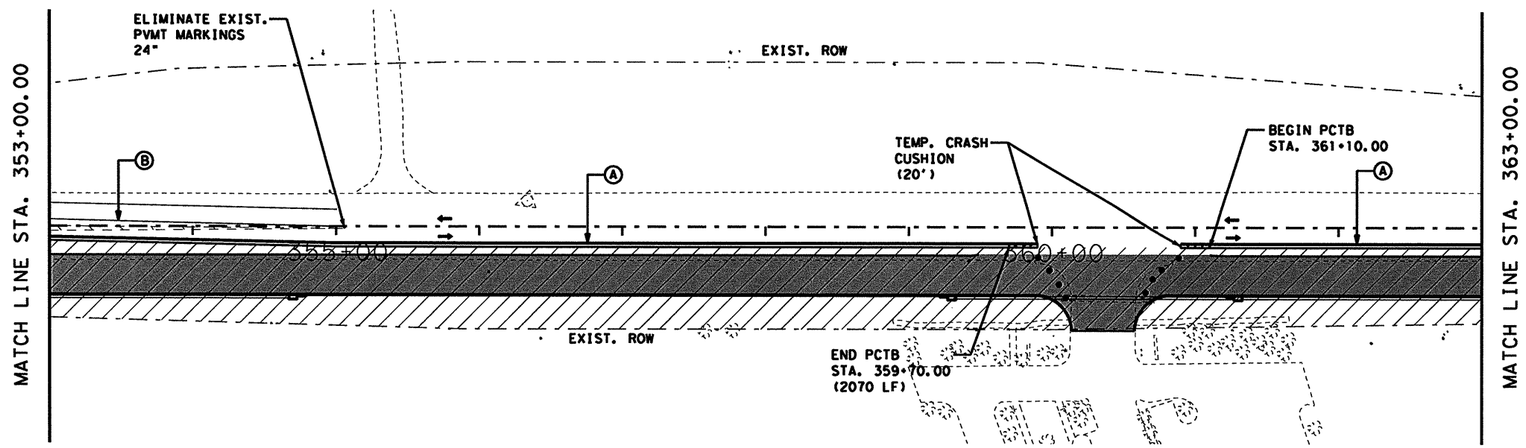

LEGEND

- CONSTRUCTION ZONE THIS PHASE
- PHASE CONSTRUCTION FOR MAJOR INTERSECTIONS
- PAVEMENT CONSTRUCTION THIS PHASE
- PAVEMENT CONSTRUCTION PREVIOUS PHASE
- TEMPORARY ASPHALT PAVEMENT
- PORTABLE CONCRETE TRAFFIC BARRIER (PCTB)
- TEMPORARY CRASH CUSHION
- CHANNELIZATION DEVICES
- TYPE III BARRICADE
- SIGN
- TEMPORARY TRAFFIC
- (A) WK ZN PAV MRK. REMOV (W) 4" (SLD)
- (B) WK ZN PAV MRK. REMOV (Y) 4" (SLD W/MRKR)

NOTES:

1. SEE PROJECT LAYOUT SHEETS FOR ADVANCE WARNING AND SIGN PLACEMENT.

2. EXISTING PAVEMENT MARKINGS TO REMAIN DURING PHASE I, EXCEPT WHERE NOTED IN THE PLANS OR WHERE MARKINGS ARE WORN. PROVIDE WORK ZONE PAVEMENT MARKINGS AS NEEDED.

3. THE CONTRACTOR IS REQUIRED TO PROVIDE ACCESS TO PRIVATE PROPERTY AND INTERSECTING ROADWAYS AT ALL TIMES.

4. THE CONTRACTOR IS REQUIRED TO MAINTAIN POSITIVE DRAINAGE DURING CONSTRUCTION.

5. SEE MISCELLANEOUS TCP DETAILS FOR TYPICAL DRIVEWAYS AND UNSIGNALIZED INTERSECTIONS.

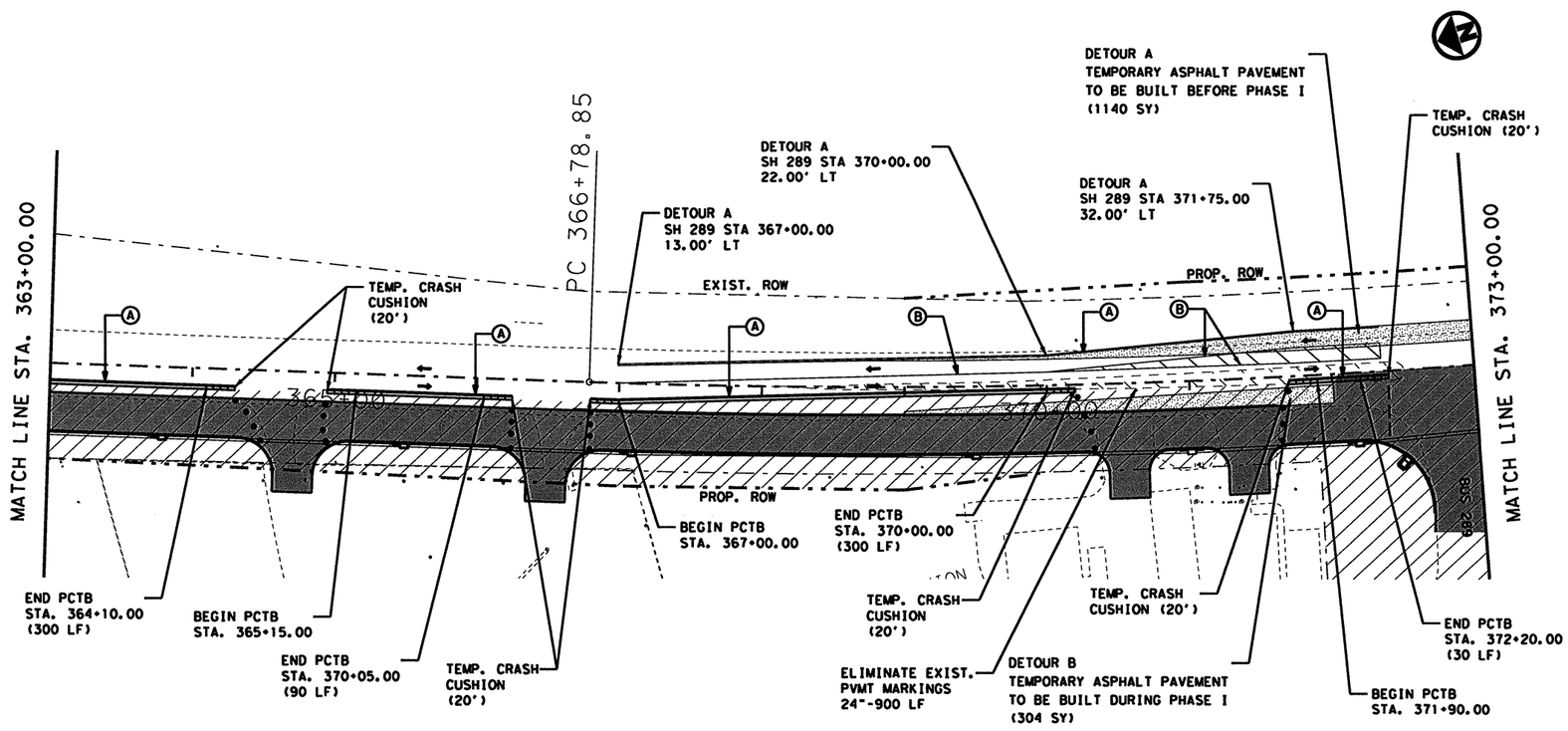

STATE OF TEXAS
NICHOLAS VON SPENCER
93702
LICENSED PROFESSIONAL ENGINEER

Nicholas V Spencer, P.E. 4-8-11
Signature of Registrant & Date

Texas Department of Transportation
© 2011

SH 289 TRAFFIC CONTROL PLAN PHASE I

SCALE: 1"=100' SHEET 4 OF 12

DESIGN	FED.RD. DIV.NO.	STATE PROJECT NO.		HIGHWAY NO.
AMW	6	(SEE TITLE SHEET)		SH 289
GRAPHICS AMW	STATE	DISTRICT	COUNTY	SHEET NO.
CHECK NVS	TEXAS	DALLAS	COLLIN	73
CHECK NVS	CONTROL	SECTION	JOB	
	0091	04	055	

T:\DALDGN\A\SH 289 Celina\THE PLANS\Traffic Control\Phase I\tcp*phaseI*4.dgn

4/7/2011 3:28:04 PM

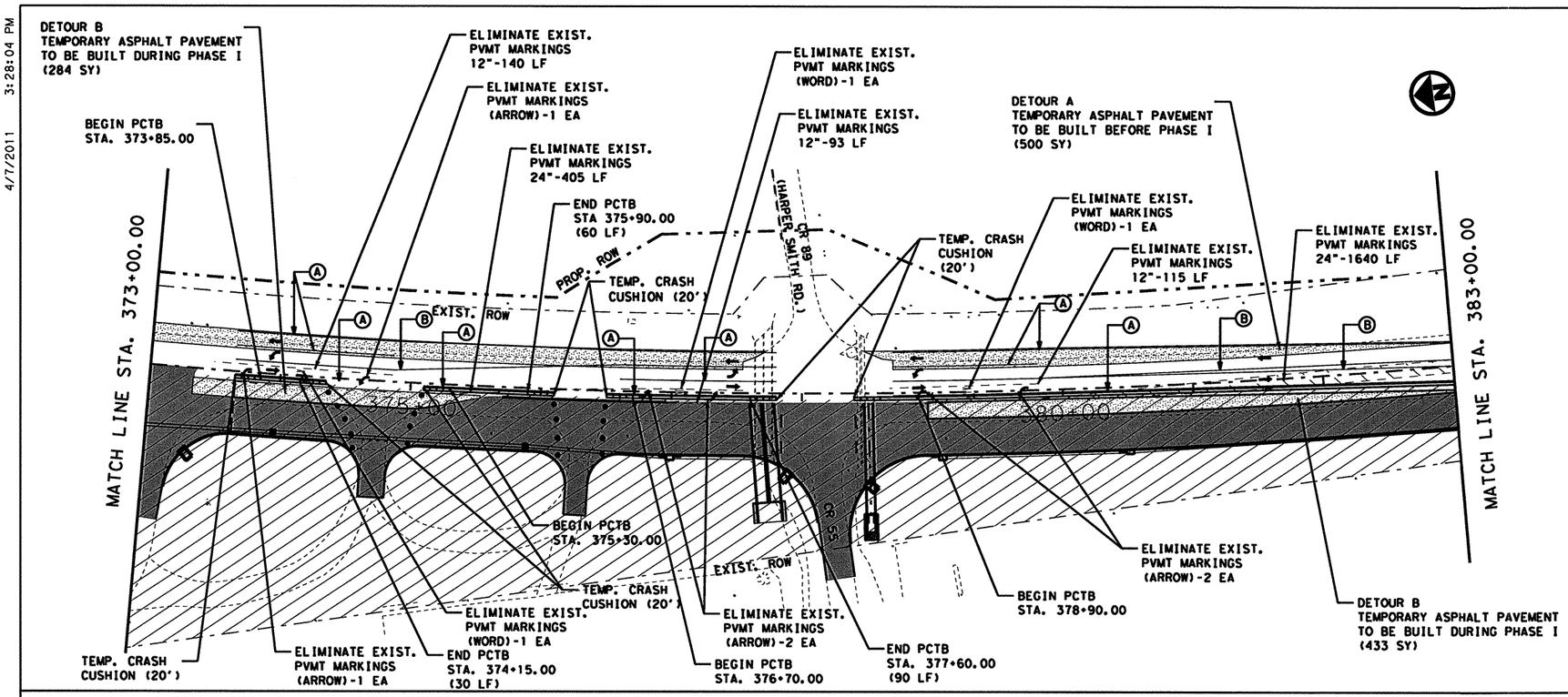

LEGEND

- CONSTRUCTION ZONE THIS PHASE
- PHASE CONSTRUCTION FOR MAJOR INTERSECTIONS
- PAVEMENT CONSTRUCTION THIS PHASE
- PAVEMENT CONSTRUCTION PREVIOUS PHASE
- TEMPORARY ASPHALT PAVEMENT
- PORTABLE CONCRETE TRAFFIC BARRIER (PCTB)
- TEMPORARY CRASH CUSHION
- CHANNELIZATION DEVICES
- TYPE III BARRICADE
- SIGN
- TEMPORARY TRAFFIC
- (A) WK ZN PAV MRK. REMOV (W) 4" (SLD)
- (B) WK ZN PAV MRK. REMOV (Y) 4" (SLD W/MRKR)

NOTES:

1. SEE PROJECT LAYOUT SHEETS FOR ADVANCE WARNING AND SIGN PLACEMENT.

2. EXISTING PAVEMENT MARKINGS TO REMAIN DURING PHASE I, EXCEPT WHERE NOTED IN THE PLANS OR WHERE MARKINGS ARE WORN. PROVIDE WORK ZONE PAVEMENT MARKINGS AS NEEDED.

3. THE CONTRACTOR IS REQUIRED TO PROVIDE ACCESS TO PRIVATE PROPERTY AND INTERSECTING ROADWAYS AT ALL TIMES.

4. THE CONTRACTOR IS REQUIRED TO MAINTAIN POSITIVE DRAINAGE DURING CONSTRUCTION.

5. SEE MISCELLANEOUS TCP DETAILS FOR TYPICAL DRIVEWAYS AND UNSIGNALIZED INTERSECTIONS.

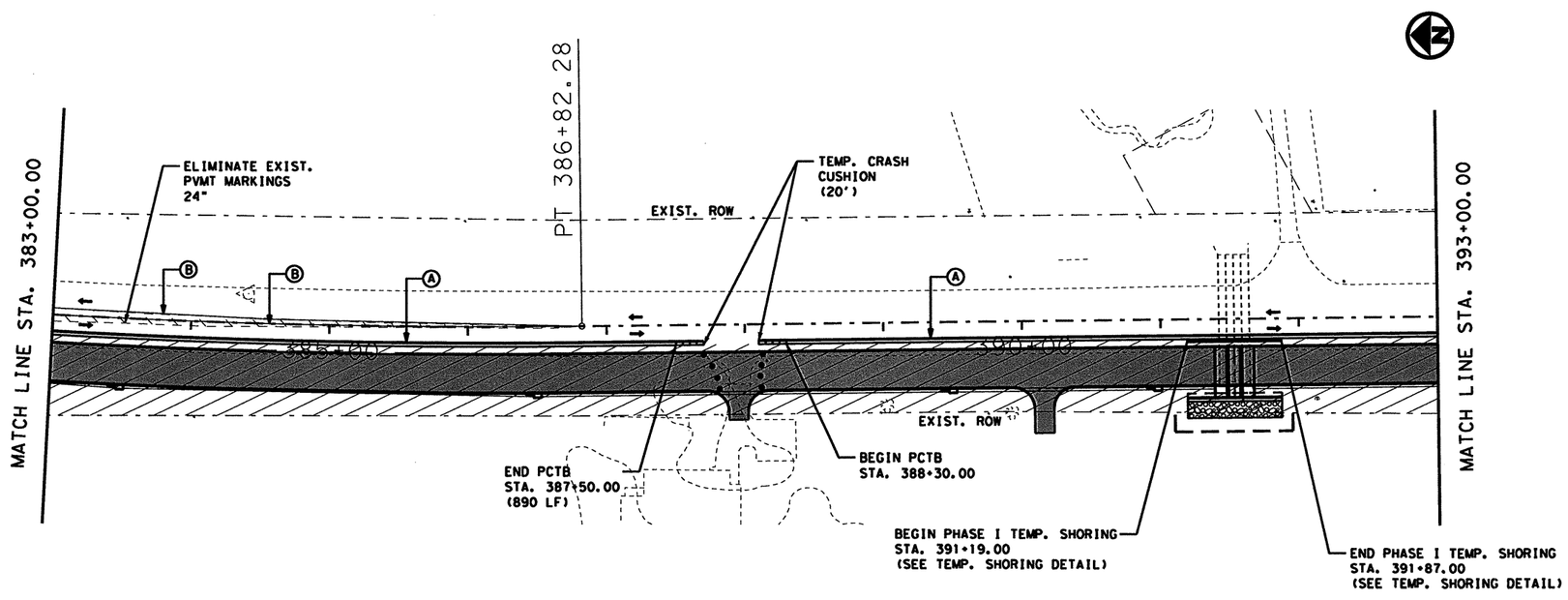

STATE OF TEXAS
NICHOLAS VON SPENCER
93702
LICENSED
PROFESSIONAL ENGINEER

Signature of Registrant, P.E. & Date 4-8-11

Texas Department of Transportation
© 2011

SH 289
TRAFFIC CONTROL PLAN
PHASE I

SCALE: 1"=100' SHEET 5 OF 12

DESIGN	FED. RD. DIV. NO.	STATE PROJECT NO.		HIGHWAY NO.
AMW	6	(SEE TITLE SHEET)		SH 289
GRAPHICS AMW	STATE	DISTRICT	COUNTY	SHEET NO.
CHECK NVS	TEXAS	DALLAS	COLLIN	74
CHECK NVS	CONTROL 0091	SECTION 04	JOB 055	

T:\DALDGN*A\SH 289 Celina\THE PLANS\Traffic Control\Phase I\tcp*phase1*5.dgn

R-201104-01

4/7/2011 3:28:18 PM
T:\DALDGN*A\SH 289 Celina\THE PLANS\Traffic Control\Phase I\tcp*phase1*6.dgn

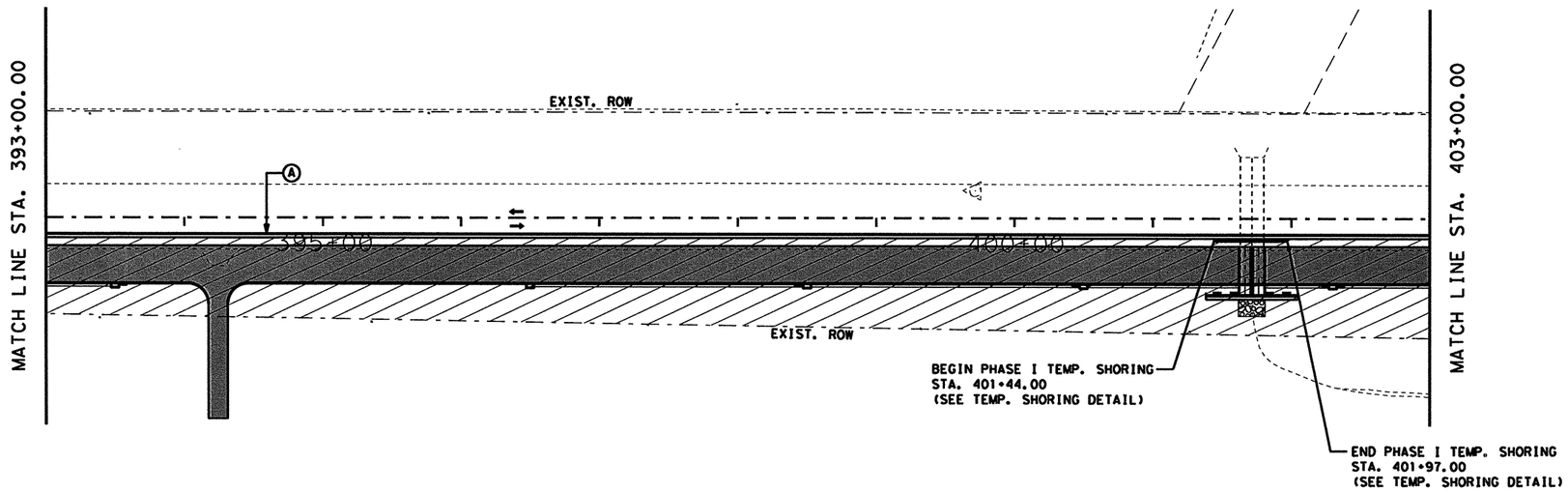

LEGEND

- CONSTRUCTION ZONE THIS PHASE
- PHASE CONSTRUCTION FOR MAJOR INTERSECTIONS
- PAVEMENT CONSTRUCTION THIS PHASE
- PAVEMENT CONSTRUCTION PREVIOUS PHASE
- TEMPORARY ASPHALT PAVEMENT
- PORTABLE CONCRETE TRAFFIC BARRIER (PCTB)
- TEMPORARY CRASH CUSHION
- CHANNELIZATION DEVICES
- TYPE III BARRICADE
- SIGN
- TEMPORARY TRAFFIC
- (A) WK ZN PAV MRK. REMOV (W) 4" (SLD)
- (B) WK ZN PAV MRK. REMOV (Y) 4" (SLD W/MRKR)

NOTES:

1. SEE PROJECT LAYOUT SHEETS FOR ADVANCE WARNING AND SIGN PLACEMENT.

2. EXISTING PAVEMENT MARKINGS TO REMAIN DURING PHASE I, EXCEPT WHERE NOTED IN THE PLANS OR WHERE MARKINGS ARE WORN. PROVIDE WORK ZONE PAVEMENT MARKINGS AS NEEDED.

3. THE CONTRACTOR IS REQUIRED TO PROVIDE ACCESS TO PRIVATE PROPERTY AND INTERSECTING ROADWAYS AT ALL TIMES.

4. THE CONTRACTOR IS REQUIRED TO MAINTAIN POSITIVE DRAINAGE DURING CONSTRUCTION.

5. SEE MISCELLANEOUS TCP DETAILS FOR TYPICAL DRIVEWAYS AND UNSIGNALIZED INTERSECTIONS.

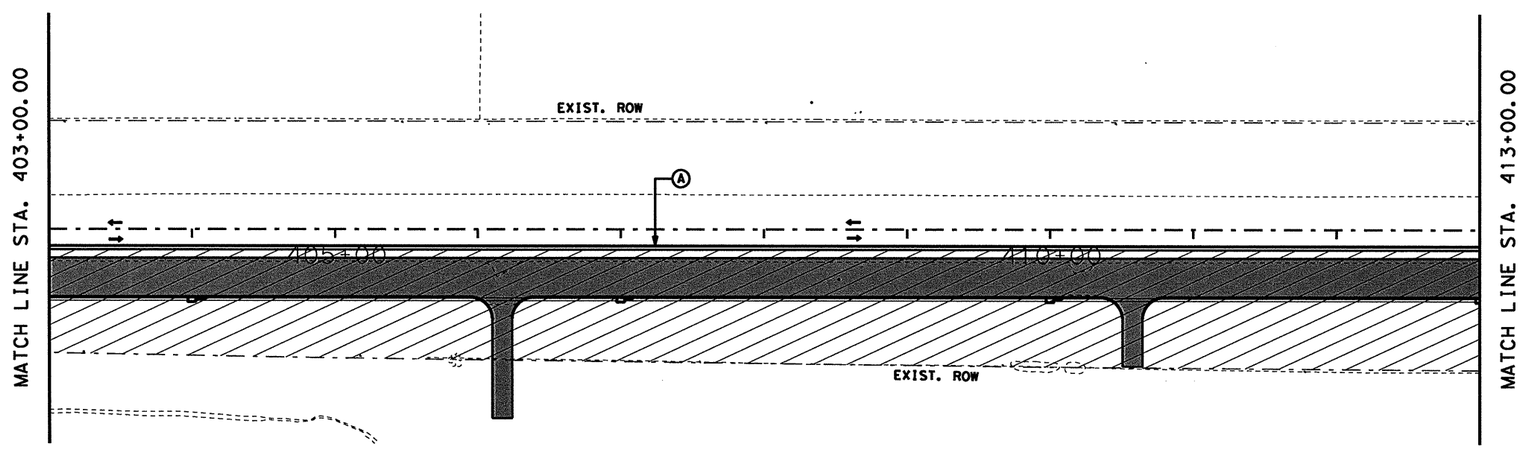

STATE OF TEXAS
NICHOLAS VON SPENCER
93702
LICENSED
PROFESSIONAL ENGINEER

Nicholas V Spencer, P.E. 4-8-11
Signature of Registrant & Date

Texas Department of Transportation
© 2011

SH 289 TRAFFIC CONTROL PLAN PHASE I

SCALE: 1"=100'

SHEET 6 OF 12

DESIGN	FED. RD. DIV. NO.	STATE PROJECT NO.		HIGHWAY NO.
AMW	6	(SEE TITLE SHEET)		SH 289
GRAPHICS AMW	STATE	DISTRICT	COUNTY	SHEET NO.
CHECK NVS	TEXAS	DALLAS	COLLIN	75
CHECK NVS	CONTROL	SECTION	JOB	
	0091	04	055	

4/7/2011 3:28:29 PM

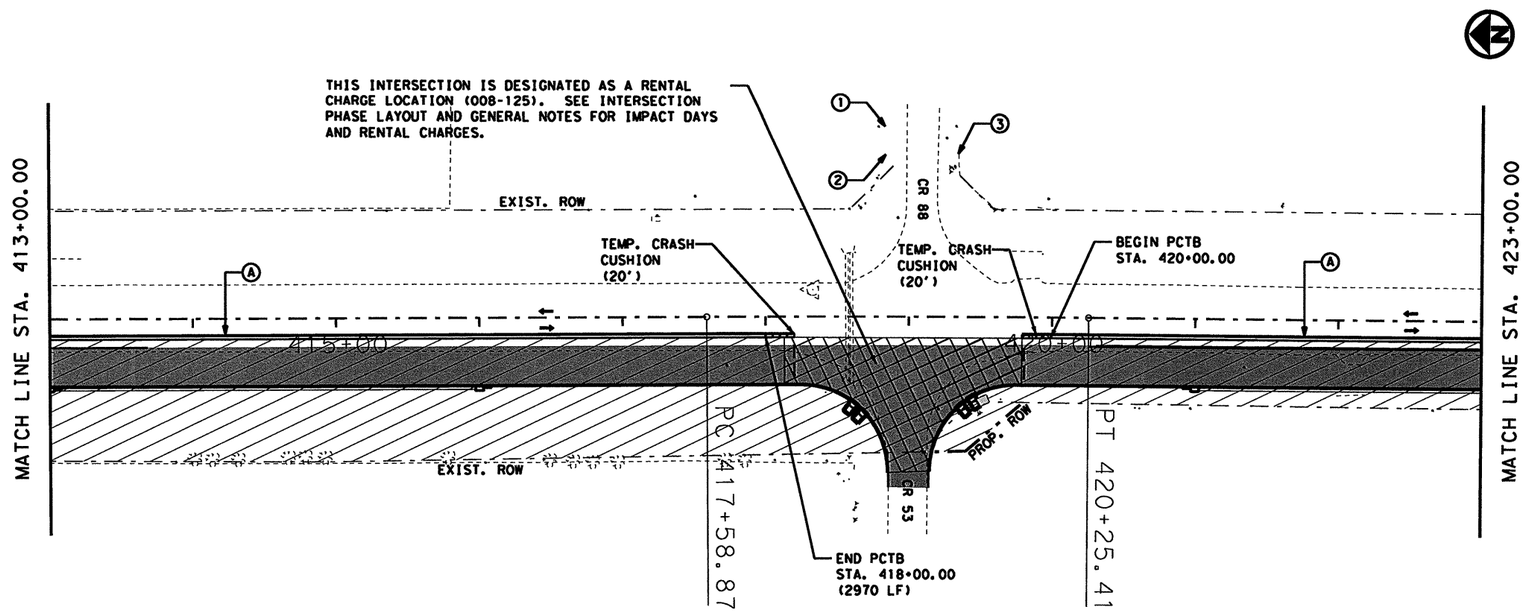

LEGEND

- CONSTRUCTION ZONE THIS PHASE
- PHASE CONSTRUCTION FOR MAJOR INTERSECTIONS
- PAVEMENT CONSTRUCTION THIS PHASE
- PAVEMENT CONSTRUCTION PREVIOUS PHASE
- TEMPORARY ASPHALT PAVEMENT
- PORTABLE CONCRETE TRAFFIC BARRIER (PCTB)
- TEMPORARY CRASH CUSHION
- CHANNELIZATION DEVICES
- TYPE III BARRICADE
- SIGN
- TEMPORARY TRAFFIC
- (A) WK ZN PAV MRK. REMOV (W) 4" (SLD)
- (B) WK ZN PAV MRK. REMOV (Y) 4" (SLD W/MRKR)

NOTES:

1. SEE PROJECT LAYOUT SHEETS FOR ADVANCE WARNING AND SIGN PLACEMENT.

2. EXISTING PAVEMENT MARKINGS TO REMAIN DURING PHASE I, EXCEPT WHERE NOTED IN THE PLANS OR WHERE MARKINGS ARE WORN. PROVIDE WORK ZONE PAVEMENT MARKINGS AS NEEDED.

3. THE CONTRACTOR IS REQUIRED TO PROVIDE ACCESS TO PRIVATE PROPERTY AND INTERSECTING ROADWAYS AT ALL TIMES.

4. THE CONTRACTOR IS REQUIRED TO MAINTAIN POSITIVE DRAINAGE DURING CONSTRUCTION.

5. SEE MISCELLANEOUS TCP DETAILS FOR TYPICAL DRIVEWAYS AND UNSIGNALIZED INTERSECTIONS.

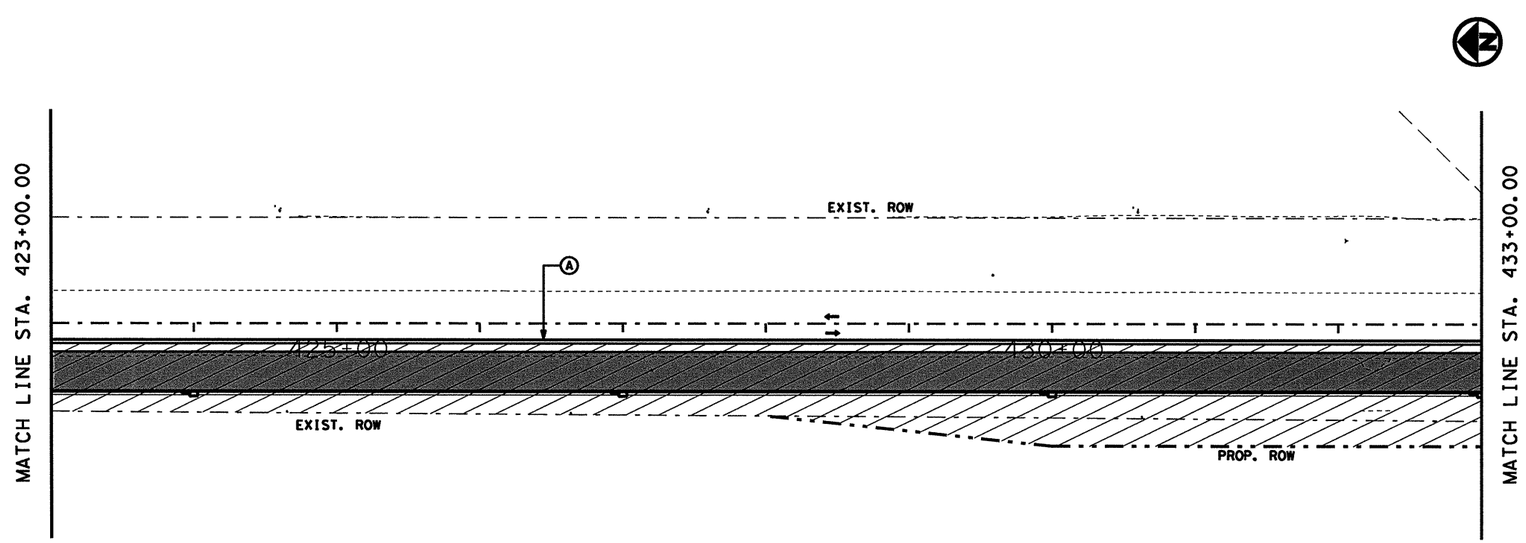

STATE OF TEXAS
NICHOLAS VON SPENCER
93702
LICENSED
PROFESSIONAL ENGINEER

Nicholas V Spencer, P.E. 4-8-11
Signature of Registrant & Date

Texas Department of Transportation
© 2011

SH 289 TRAFFIC CONTROL PLAN PHASE I

SCALE: 1"=100' SHEET 7 OF 12

DESIGN	FED. RD. DIV. NO.	STATE PROJECT NO.		HIGHWAY NO.
AMW	6	(SEE TITLE SHEET)		SH 289
GRAPHICS AMW	STATE	DISTRICT	COUNTY	SHEET NO.
CHECK NVS	TEXAS	DALLAS	COLLIN	76
CHECK NVS	CONTROL	SECTION	JOB	
	0091	04	055	

T:\DALDGN*A\SH 289 Celina\THE PLANS\Traffic Control\Phase I\tcp*phase1*7.dgn

4/7/2011 3:28:38 PM
T:\DALDGN\A\SH 289 Celina\THE PLANS\Traffic Control\Phase I\tcp*phaseI*8.dgn

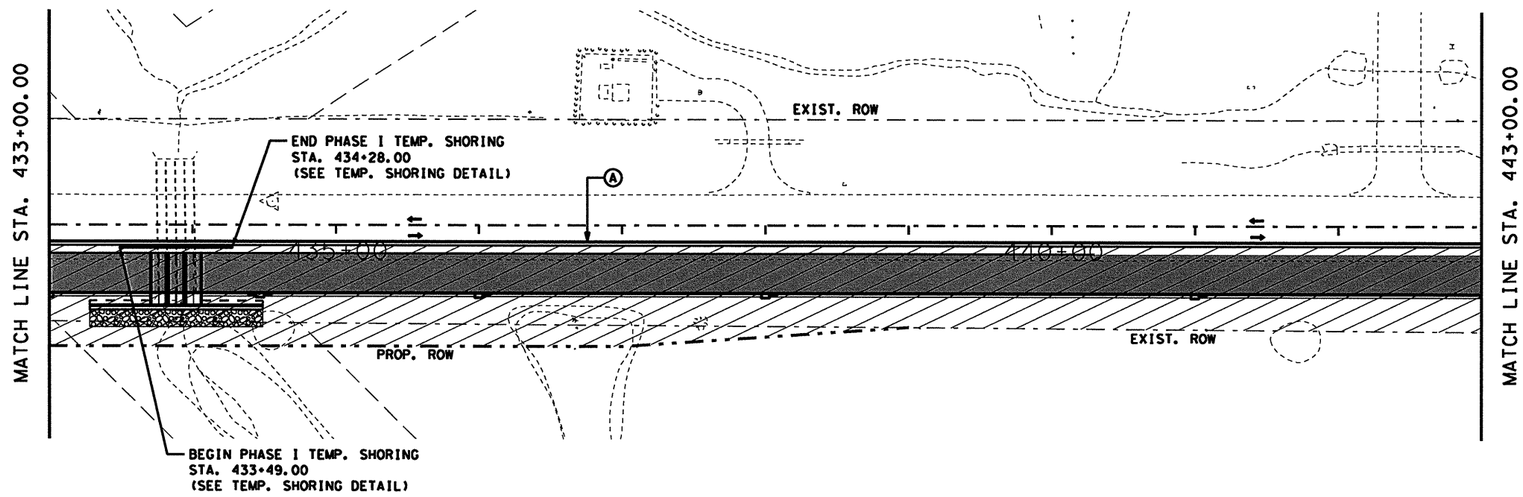

LEGEND

- CONSTRUCTION ZONE THIS PHASE
- PHASE CONSTRUCTION FOR MAJOR INTERSECTIONS
- PAVEMENT CONSTRUCTION THIS PHASE
- PAVEMENT CONSTRUCTION PREVIOUS PHASE
- TEMPORARY ASPHALT PAVEMENT
- PORTABLE CONCRETE TRAFFIC BARRIER (PCTB)
- TEMPORARY CRASH CUSHION
- CHANNELIZATION DEVICES
- TYPE III BARRICADE
- SIGN
- TEMPORARY TRAFFIC
- (A) WK ZN PAV MRK. REMOV (W) 4" (SLD)
- (B) WK ZN PAV MRK. REMOV (Y) 4" (SLD W/MRKR)

NOTES:

1. SEE PROJECT LAYOUT SHEETS FOR ADVANCE WARNING AND SIGN PLACEMENT.

2. EXISTING PAVEMENT MARKINGS TO REMAIN DURING PHASE I, EXCEPT WHERE NOTED IN THE PLANS OR WHERE MARKINGS ARE WORN. PROVIDE WORK ZONE PAVEMENT MARKINGS AS NEEDED.

3. THE CONTRACTOR IS REQUIRED TO PROVIDE ACCESS TO PRIVATE PROPERTY AND INTERSECTING ROADWAYS AT ALL TIMES.

4. THE CONTRACTOR IS REQUIRED TO MAINTAIN POSITIVE DRAINAGE DURING CONSTRUCTION.

5. SEE MISCELLANEOUS TCP DETAILS FOR TYPICAL DRIVEWAYS AND UNSIGNALIZED INTERSECTIONS.

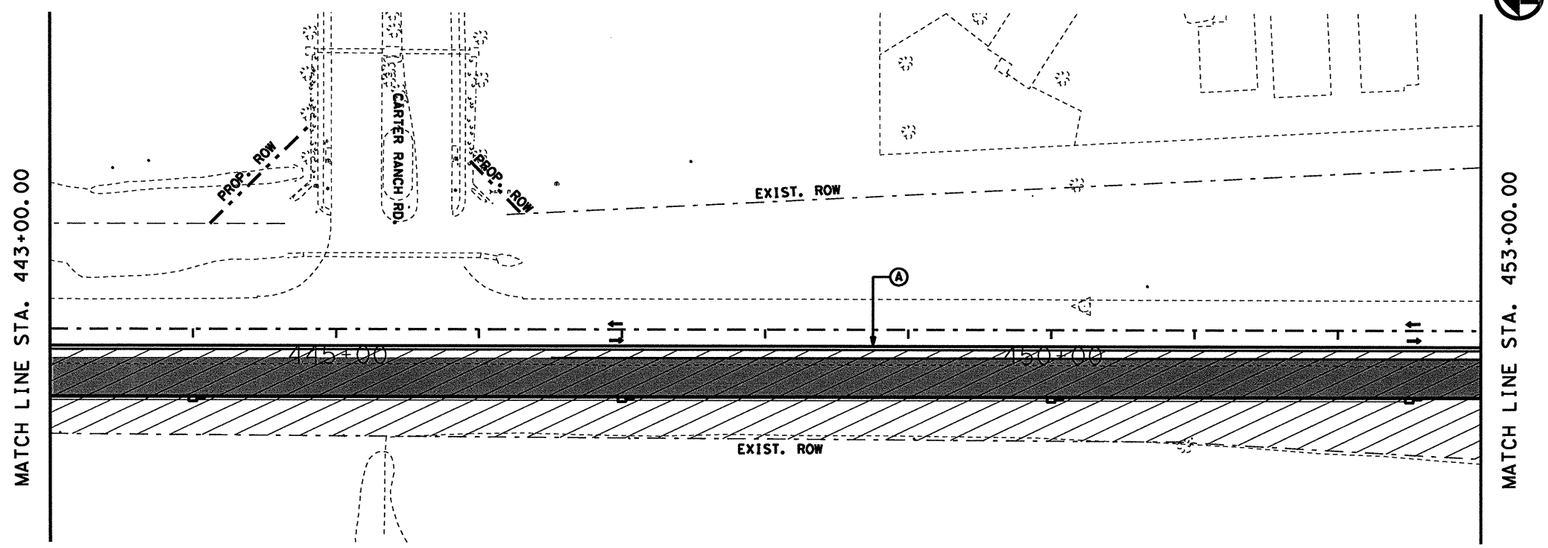

STATE OF TEXAS
NICHOLAS VON SPENCER
93702
LICENSED
PROFESSIONAL ENGINEER

Nicholas V Spencer, P.E. 4-8-11
Signature of Registrant & Date

Texas Department of Transportation
© 2011

SH 289
TRAFFIC CONTROL PLAN
PHASE I

SCALE: 1"=100'

SHEET 8 OF 12

DESIGN	FED. RD. DIV. NO.	STATE PROJECT NO.		HIGHWAY NO.
AMW	6	(SEE TITLE SHEET)		SH 289
GRAPHICS AMW	STATE	DISTRICT	COUNTY	SHEET NO.
CHECK NVS	TEXAS	DALLAS	COLLIN	77
CHECK NVS	CONTROL	SECTION	JOB	
	0091	04	055	

4/7/2011 3:28:48 PM

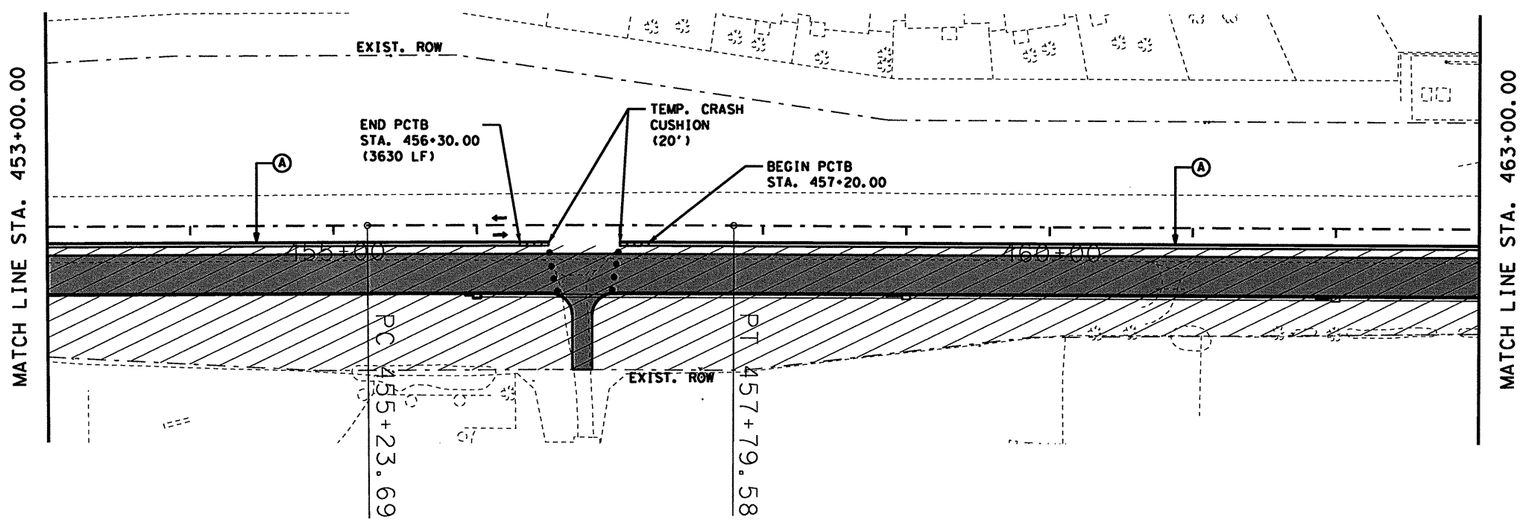

LEGEND

- CONSTRUCTION ZONE THIS PHASE
- PHASE CONSTRUCTION FOR MAJOR INTERSECTIONS
- PAVEMENT CONSTRUCTION THIS PHASE
- PAVEMENT CONSTRUCTION PREVIOUS PHASE
- TEMPORARY ASPHALT PAVEMENT
- PORTABLE CONCRETE TRAFFIC BARRIER (PCTB)
- TEMPORARY CRASH CUSHION
- CHANNELIZATION DEVICES
- TYPE III BARRICADE
- SIGN
- TEMPORARY TRAFFIC
- (A) WK ZN PAV MRK. REMOV (W) 4" (SLD)
- (B) WK ZN PAV MRK. REMOV (Y) 4" (SLD W/MRKR)

NOTES:

1. SEE PROJECT LAYOUT SHEETS FOR ADVANCE WARNING AND SIGN PLACEMENT.

2. EXISTING PAVEMENT MARKINGS TO REMAIN DURING PHASE I, EXCEPT WHERE NOTED IN THE PLANS OR WHERE MARKINGS ARE WORN. PROVIDE WORK ZONE PAVEMENT MARKINGS AS NEEDED.

3. THE CONTRACTOR IS REQUIRED TO PROVIDE ACCESS TO PRIVATE PROPERTY AND INTERSECTING ROADWAYS AT ALL TIMES.

4. THE CONTRACTOR IS REQUIRED TO MAINTAIN POSITIVE DRAINAGE DURING CONSTRUCTION.

5. SEE MISCELLANEOUS TCP DETAILS FOR TYPICAL DRIVEWAYS AND UNSIGNALIZED INTERSECTIONS.

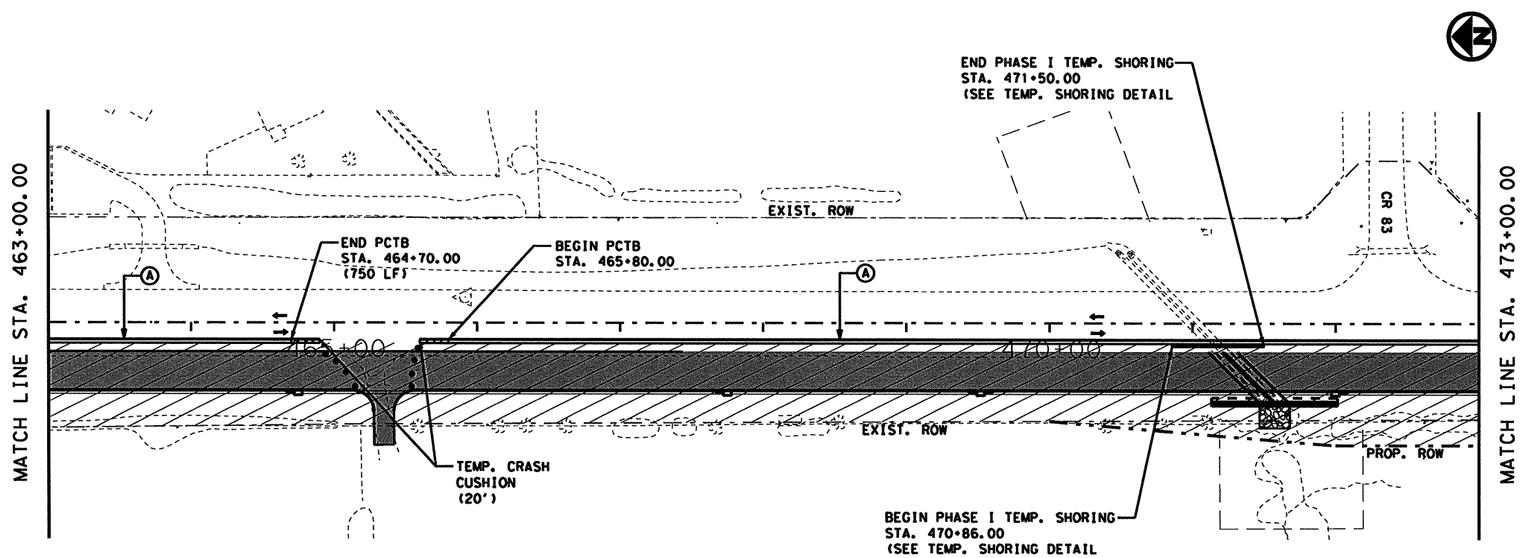

STATE OF TEXAS
NICHOLAS VON SPENCER
93702
LICENSED
PROFESSIONAL ENGINEER

Nicholas V Spencer, P.E. 4-8-11
Signature of Registrant & Date

Texas Department of Transportation
© 2011

SH 289
TRAFFIC CONTROL PLAN
PHASE I

SCALE: 1"=100'

SHEET 9 OF 12

DESIGN	FED. RD. DIV. NO.	STATE PROJECT NO.		HIGHWAY NO.
AMW	6	(SEE TITLE SHEET)		SH 289
GRAPHICS AMW	STATE	DISTRICT	COUNTY	SHEET NO.
CHECK NVS	TEXAS	DALLAS	COLLIN	78
CHECK NVS	CONTROL	SECTION	JOB	
	0091	04	055	

T:\DALDGN*A\SH 289 Celina\THE PLANS\Traffic Control\Phase I\tcp*phase1*9.dgn

R-201104-01

4/7/2011 3:28:57 PM

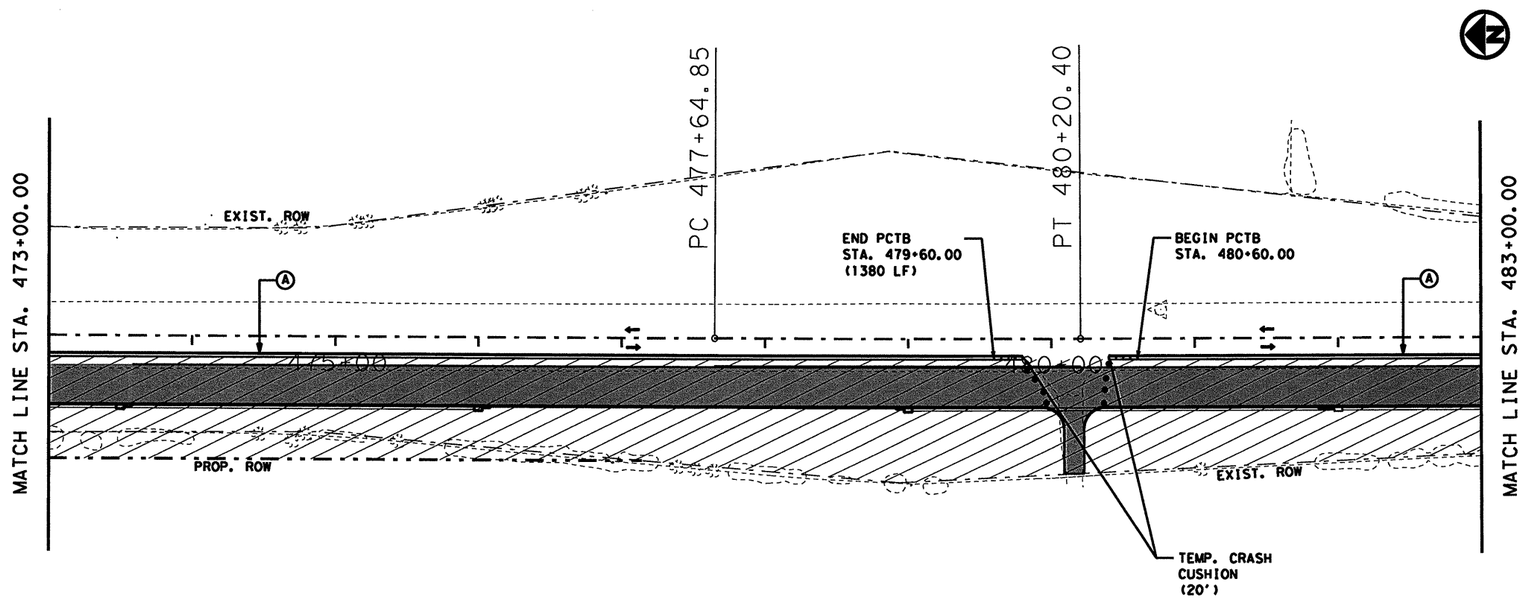

LEGEND

- CONSTRUCTION ZONE THIS PHASE
- PHASE CONSTRUCTION FOR MAJOR INTERSECTIONS
- PAVEMENT CONSTRUCTION THIS PHASE
- PAVEMENT CONSTRUCTION PREVIOUS PHASE
- TEMPORARY ASPHALT PAVEMENT
- PORTABLE CONCRETE TRAFFIC BARRIER (PCTB)
- TEMPORARY CRASH CUSHION
- CHANNELIZATION DEVICES
- TYPE III BARRICADE
- SIGN
- TEMPORARY TRAFFIC
- (A) WK ZN PAV MRK. REMOV (W) 4" (SLD)
- (B) WK ZN PAV MRK. REMOV (Y) 4" (SLD W/MRKR)

NOTES:

1. SEE PROJECT LAYOUT SHEETS FOR ADVANCE WARNING AND SIGN PLACEMENT.

2. EXISTING PAVEMENT MARKINGS TO REMAIN DURING PHASE I, EXCEPT WHERE NOTED IN THE PLANS OR WHERE MARKINGS ARE WORN. PROVIDE WORK ZONE PAVEMENT MARKINGS AS NEEDED.

3. THE CONTRACTOR IS REQUIRED TO PROVIDE ACCESS TO PRIVATE PROPERTY AND INTERSECTING ROADWAYS AT ALL TIMES.

4. THE CONTRACTOR IS REQUIRED TO MAINTAIN POSITIVE DRAINAGE DURING CONSTRUCTION.

5. SEE MISCELLANEOUS TCP DETAILS FOR TYPICAL DRIVEWAYS AND UNSIGNALIZED INTERSECTIONS.

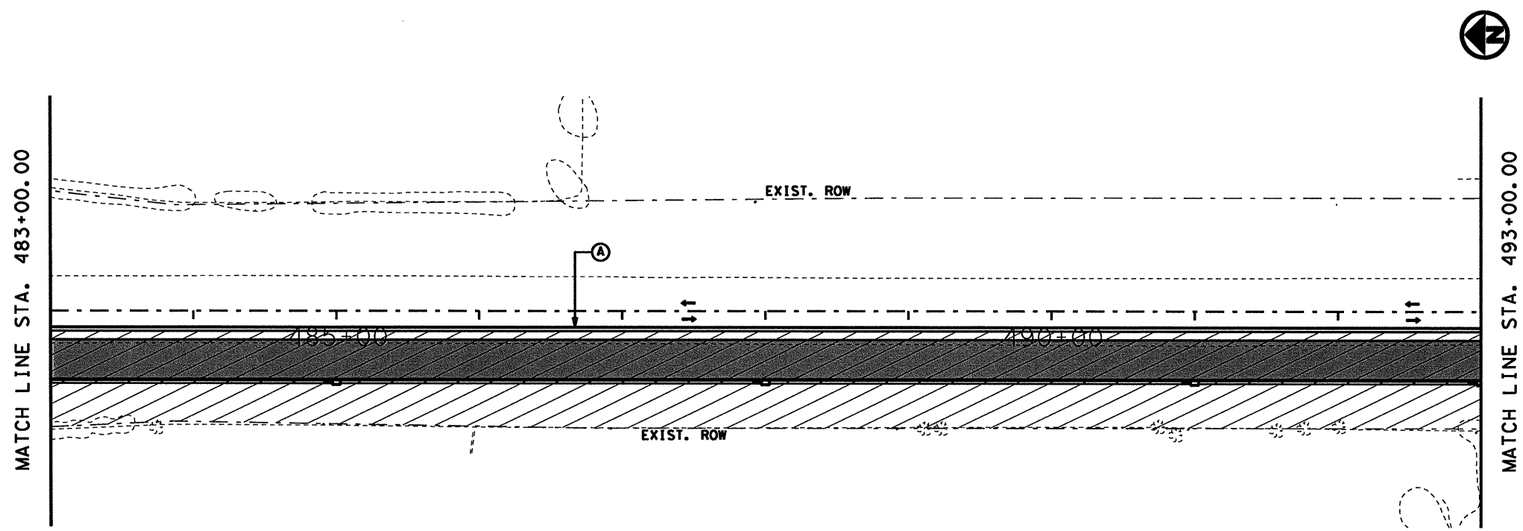

STATE OF TEXAS
NICHOLAS VON SPENCER
93702
LICENSED
PROFESSIONAL ENGINEER

Nicholas Von Spencer, P.E. 4-8-11
Signature of Registrant & Date

Texas Department of Transportation
© 2011

SH 289
TRAFFIC CONTROL PLAN
PHASE I

SCALE: 1"=100' SHEET 10 OF 12

DESIGN	FED. RD. DIV. NO.	STATE PROJECT NO.		HIGHWAY NO.
AMW	6	(SEE TITLE SHEET)		SH 289
GRAPHICS AMW	STATE	DISTRICT	COUNTY	SHEET NO.
CHECK NVS	TEXAS	DALLAS	COLLIN	79
	CONTROL	SECTION	JOB	
CHECK NVS	0091	04	055	

T:\DALDGN*A\SH 289 Collin\THE PLANS\Traffic Control\Phase I\tcp*phase1*10.dgn

4/7/2011 3:29:08 PM

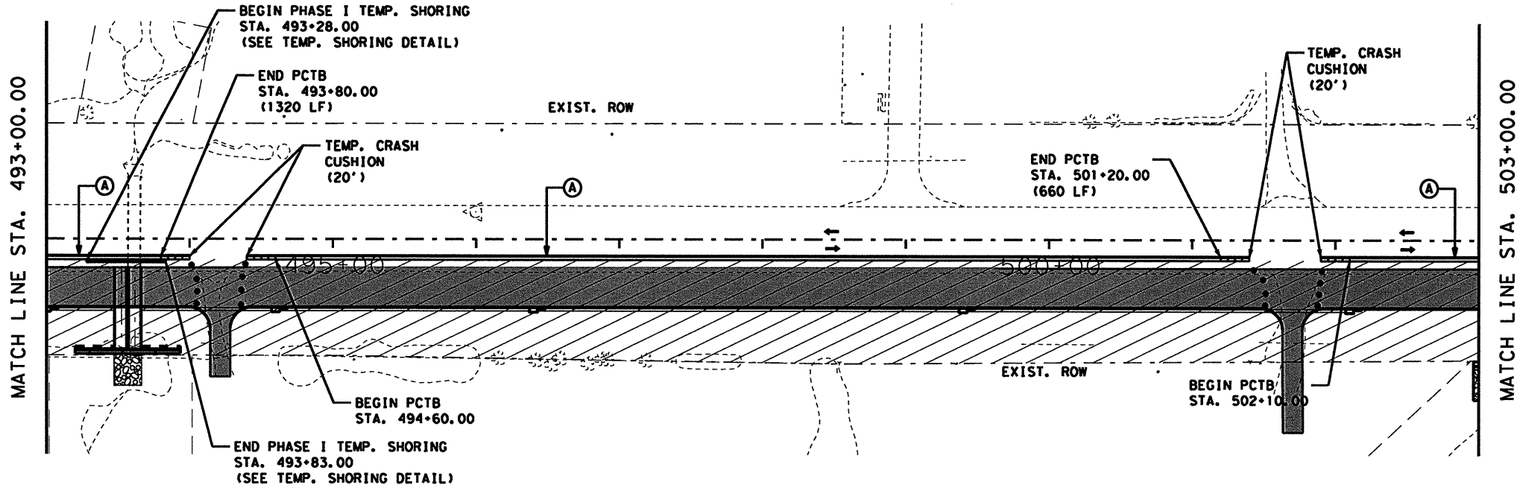

LEGEND

- CONSTRUCTION ZONE THIS PHASE
- PHASE CONSTRUCTION FOR MAJOR INTERSECTIONS
- PAVEMENT CONSTRUCTION THIS PHASE
- PAVEMENT CONSTRUCTION PREVIOUS PHASE
- TEMPORARY ASPHALT PAVEMENT
- PORTABLE CONCRETE TRAFFIC BARRIER (PCTB)
- TEMPORARY CRASH CUSHION
- CHANNELIZATION DEVICES
- TYPE III BARRICADE
- SIGN
- TEMPORARY TRAFFIC
- (A) WK ZN PAV MRK. REMOV (W) 4" (SLD)
- (B) WK ZN PAV MRK. REMOV (Y) 4" (SLD W/MRKR)

NOTES:

1. SEE PROJECT LAYOUT SHEETS FOR ADVANCE WARNING AND SIGN PLACEMENT.

2. EXISTING PAVEMENT MARKINGS TO REMAIN DURING PHASE I, EXCEPT WHERE NOTED IN THE PLANS OR WHERE MARKINGS ARE WORN. PROVIDE WORK ZONE PAVEMENT MARKINGS AS NEEDED.

3. THE CONTRACTOR IS REQUIRED TO PROVIDE ACCESS TO PRIVATE PROPERTY AND INTERSECTING ROADWAYS AT ALL TIMES.

4. THE CONTRACTOR IS REQUIRED TO MAINTAIN POSITIVE DRAINAGE DURING CONSTRUCTION.

5. SEE MISCELLANEOUS TCP DETAILS FOR TYPICAL DRIVEWAYS AND UNSIGNALIZED INTERSECTIONS.

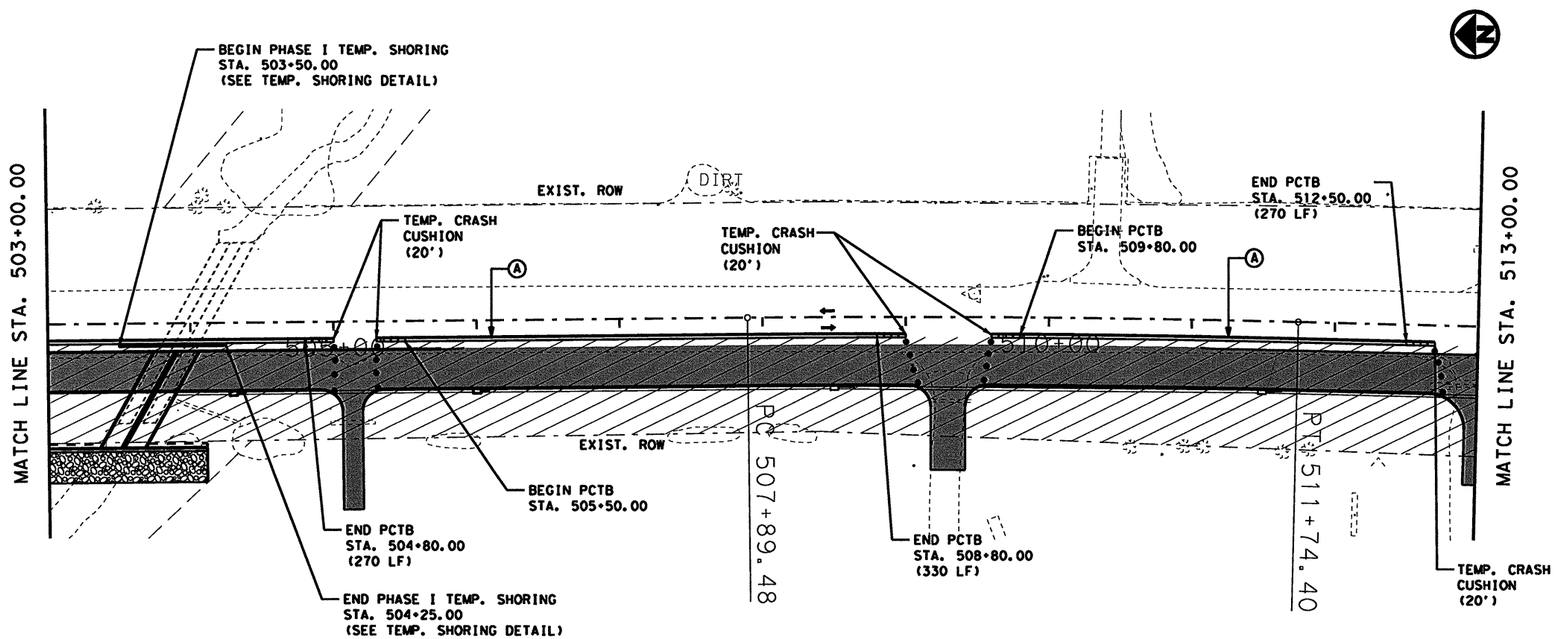

STATE OF TEXAS
NICHOLAS VON SPENCER
93702
LICENSED
PROFESSIONAL ENGINEER

Nicholas V Spencer, P.E. 4-8-11
Signature of Registrant & Date

Texas Department of Transportation
© 2011

SH 289
TRAFFIC CONTROL PLAN
PHASE I

SCALE: 1"=100'

SHEET 11 OF 12

DESIGN	FED. RD. DIV. NO.	STATE PROJECT NO.		HIGHWAY NO.
AMW	6	(SEE TITLE SHEET)		SH 289
GRAPHICS AMW	STATE	DISTRICT	COUNTY	SHEET NO.
CHECK NVS	TEXAS	DALLAS	COLLIN	80
CHECK NVS	CONTROL 0091	SECTION 04	JOB 055	

T:\DALDGN*A\SH 289 Celina\THE PLANS\Traffic Control\Phase I\tcp*phase1*11.dgn

4/7/2011 3:29:18 PM
T:\DALDGN*A\SH 289 Celina\THE PLANS\Traffic Control\Phase I\tcp*phaseI*12.dgn

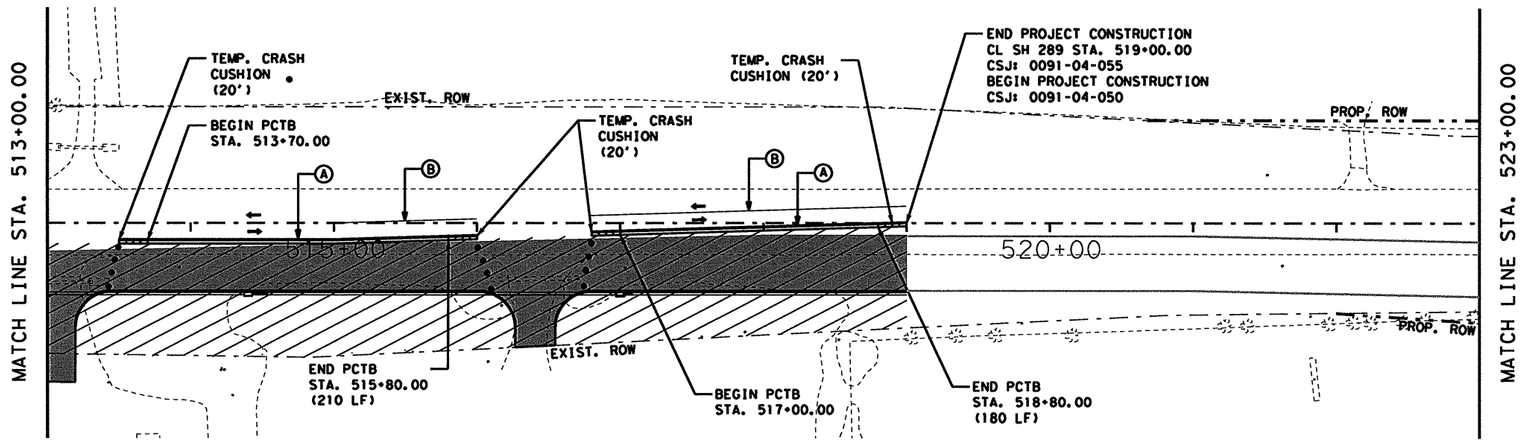

LEGEND

- CONSTRUCTION ZONE THIS PHASE
- PHASE CONSTRUCTION FOR MAJOR INTERSECTIONS
- PAVEMENT CONSTRUCTION THIS PHASE
- PAVEMENT CONSTRUCTION PREVIOUS PHASE
- TEMPORARY ASPHALT PAVEMENT
- PORTABLE CONCRETE TRAFFIC BARRIER (PCTB)
- TEMPORARY CRASH CUSHION
- CHANNELIZATION DEVICES
- TYPE III BARRICADE
- SIGN
- TEMPORARY TRAFFIC
- (A) WK ZN PAV MRK. REMOV (W) 4" (SLD)
- (B) WK ZN PAV MRK. REMOV (Y) 4" (SLD W/MRKR)

NOTES:

1. SEE PROJECT LAYOUT SHEETS FOR ADVANCE WARNING AND SIGN PLACEMENT.

2. EXISTING PAVEMENT MARKINGS TO REMAIN DURING PHASE I, EXCEPT WHERE NOTED IN THE PLANS OR WHERE MARKINGS ARE WORN. PROVIDE WORK ZONE PAVEMENT MARKINGS AS NEEDED.

3. THE CONTRACTOR IS REQUIRED TO PROVIDE ACCESS TO PRIVATE PROPERTY AND INTERSECTING ROADWAYS AT ALL TIMES.

4. THE CONTRACTOR IS REQUIRED TO MAINTAIN POSITIVE DRAINAGE DURING CONSTRUCTION.

5. SEE MISCELLANEOUS TCP DETAILS FOR TYPICAL DRIVEWAYS AND UNSIGNALIZED INTERSECTIONS.

STATE OF TEXAS
NICHOLAS VON SPENCER
93702
LICENSED
PROFESSIONAL ENGINEER

Nicholas V Spencer, P.E. 4-8-11
Signature of Registrant & Date

Texas Department of Transportation
© 2011

SH 289 TRAFFIC CONTROL PLAN PHASE I

SCALE: 1"=100'

SHEET 12 OF 12

DESIGN	FED. RD. DIV. NO.	STATE PROJECT NO.		HIGHWAY NO.
AMW	6	(SEE TITLE SHEET)		SH 289
GRAPHICS AMW	STATE	DISTRICT	COUNTY	SHEET NO.
CHECK NVS	TEXAS	DALLAS	COLLIN	81
CHECK NVS	CONTROL	SECTION	JOB	
	0091	04	055	

4/7/2011 3:46:34 PM

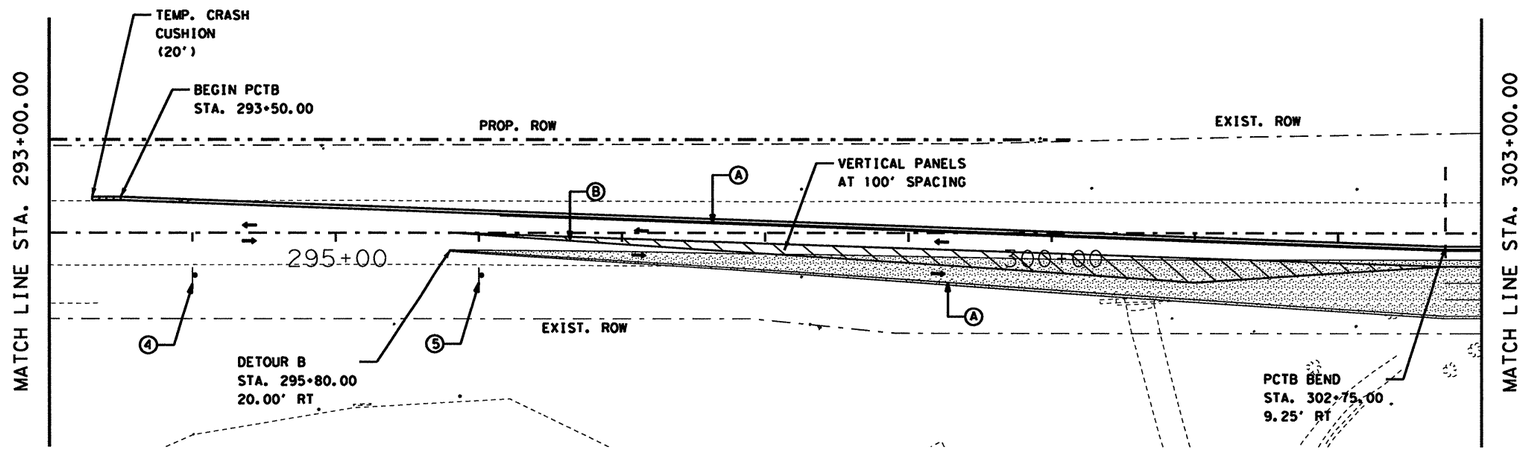

LEGEND

- CONSTRUCTION ZONE THIS PHASE
- PHASE CONSTRUCTION FOR MAJOR INTERSECTIONS
- PAVEMENT CONSTRUCTION THIS PHASE
- PAVEMENT CONSTRUCTION PREVIOUS PHASE
- TEMPORARY ASPHALT PAVEMENT
- PORTABLE CONCRETE TRAFFIC BARRIER (PCTB)
- TEMPORARY CRASH CUSHION
- CHANNELIZATION DEVICES
- TYPE III BARRICADE
- SIGN
- TEMPORARY TRAFFIC
- (A) WK ZN PAV MRK. REMOV (W) 4" (SLD)
- (B) WK ZN PAV MRK. REMOV (Y) 4" (SLD W/MRKR)

NOTES:

1. SEE PROJECT LAYOUT SHEETS FOR ADVANCE WARNING AND SIGN PLACEMENT.

2. THE CONTRACTOR IS REQUIRED TO PROVIDE ACCESS TO PRIVATE PROPERTY AND INTERSECTING ROADWAYS AT ALL TIMES.

4. THE CONTRACTOR IS REQUIRED TO MAINTAIN POSITIVE DRAINAGE DURING CONSTRUCTION.

5. SEE MISCELLANEOUS TCP DETAILS FOR TYPICAL DRIVEWAYS AND UNSIGNALIZED INTERSECTIONS.

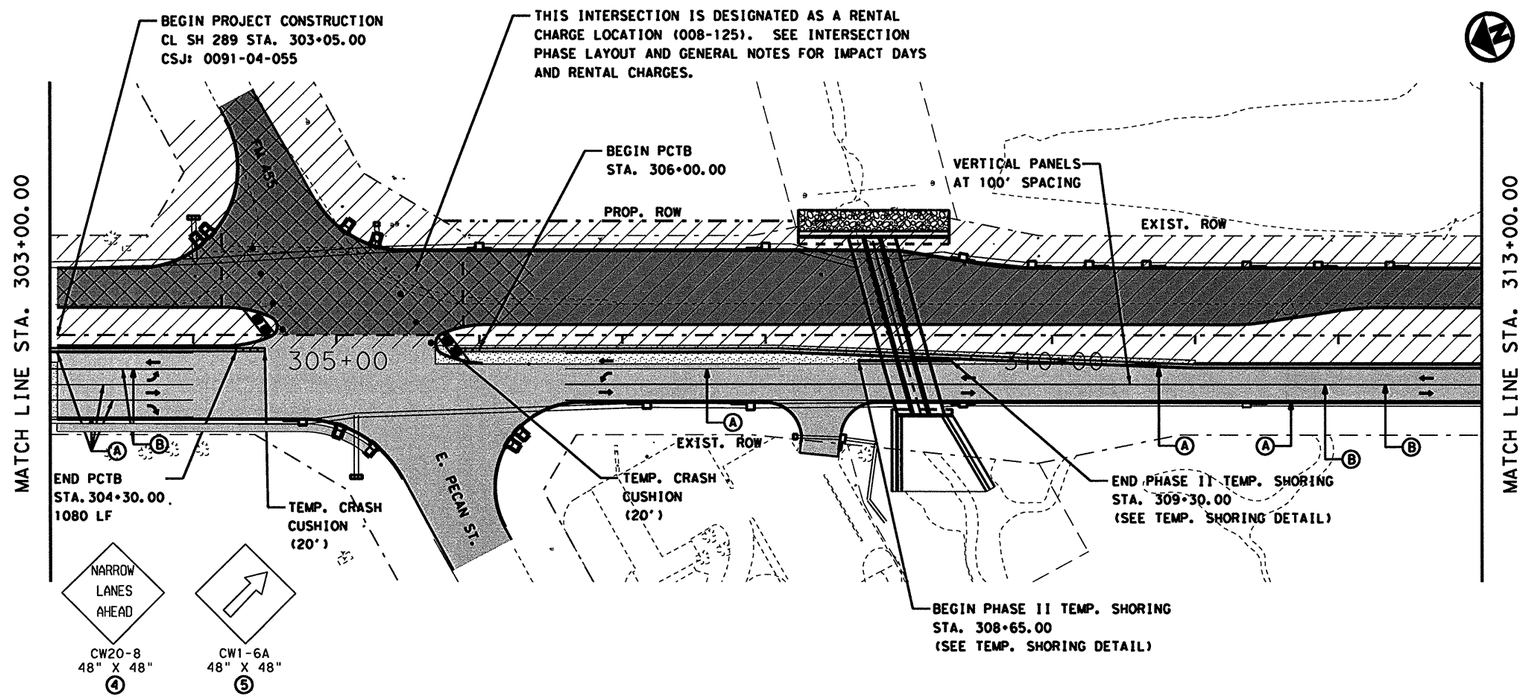

STATE OF TEXAS
NICHOLAS VON SPENCER
93702
LICENSED PROFESSIONAL ENGINEER

Nicholas V Spencer, P.E. 4-8-11
Signature of Registrant & Date

Texas Department of Transportation
© 2011

SH 289 TRAFFIC CONTROL PLAN PHASE II

SCALE: 1"=100'

SHEET 1 OF 12

DESIGN	FED. RD. DIV. NO.	STATE PROJECT NO.		HIGHWAY NO.
AMW	6	(SEE TITLE SHEET)		SH 289
GRAPHICS	STATE	DISTRICT	COUNTY	SHEET NO.
AMW	TEXAS	DALLAS	COLLIN	82
CHECK	CONTROL	SECTION	JOB	
NVS	0091	04	055	
CHECK NVS				

T:\DALDGN*A\SH 289 Celina\THE PLANS\Traffic Control\Phase II\tcp*phaseII*1.dgn

4/7/2011 3:37:34 PM

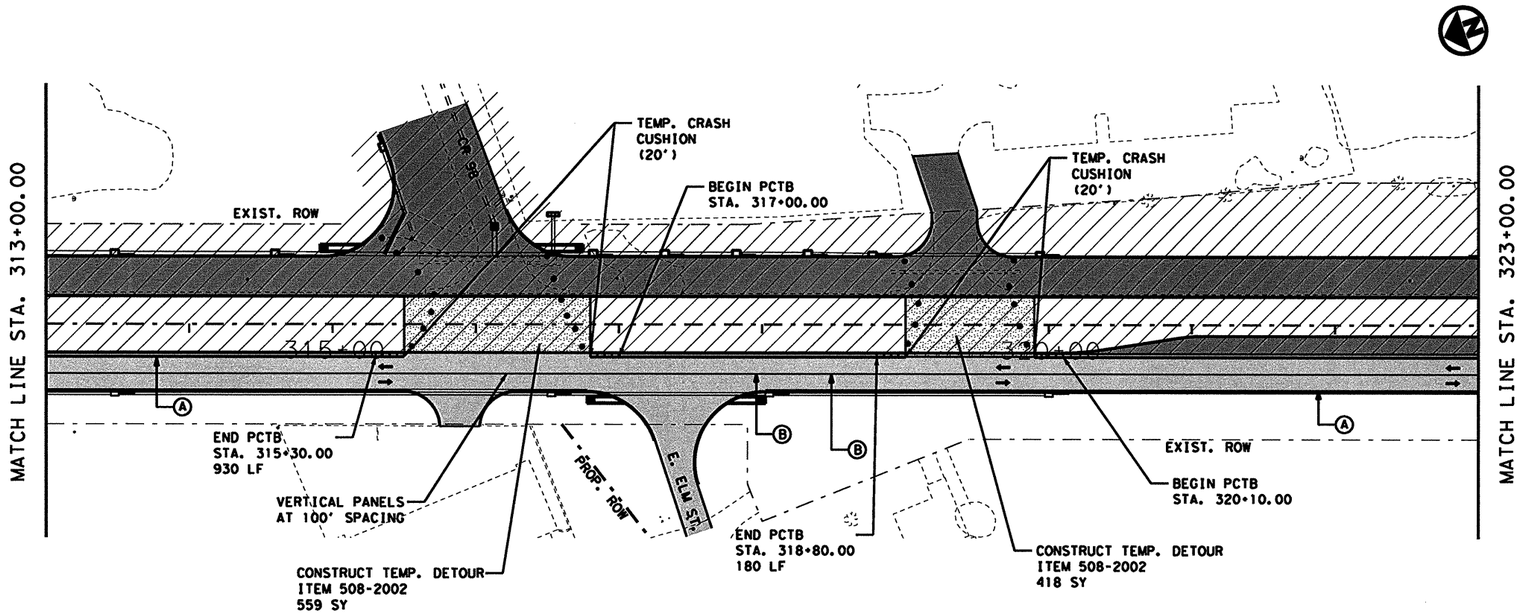

LEGEND

- CONSTRUCTION ZONE THIS PHASE
- PHASE CONSTRUCTION FOR MAJOR INTERSECTIONS
- PAVEMENT CONSTRUCTION THIS PHASE
- PAVEMENT CONSTRUCTION PREVIOUS PHASE
- TEMPORARY ASPHALT PAVEMENT
- PORTABLE CONCRETE TRAFFIC BARRIER (PCTB)
- TEMPORARY CRASH CUSHION
- CHANNELIZATION DEVICES
- TYPE III BARRICADE
- SIGN
- TEMPORARY TRAFFIC
- (A) WK ZN PAV MRK. REMOV (W) 4" (SLD)
- (B) WK ZN PAV MRK. REMOV (Y) 4" (SLD W/MRKR)

NOTES:

1. SEE PROJECT LAYOUT SHEETS FOR ADVANCE WARNING AND SIGN PLACEMENT.

2. THE CONTRACTOR IS REQUIRED TO PROVIDE ACCESS TO PRIVATE PROPERTY AND INTERSECTING ROADWAYS AT ALL TIMES.

4. THE CONTRACTOR IS REQUIRED TO MAINTAIN POSITIVE DRAINAGE DURING CONSTRUCTION.

5. SEE MISCELLANEOUS TCP DETAILS FOR TYPICAL DRIVEWAYS AND UNSIGNALIZED INTERSECTIONS.

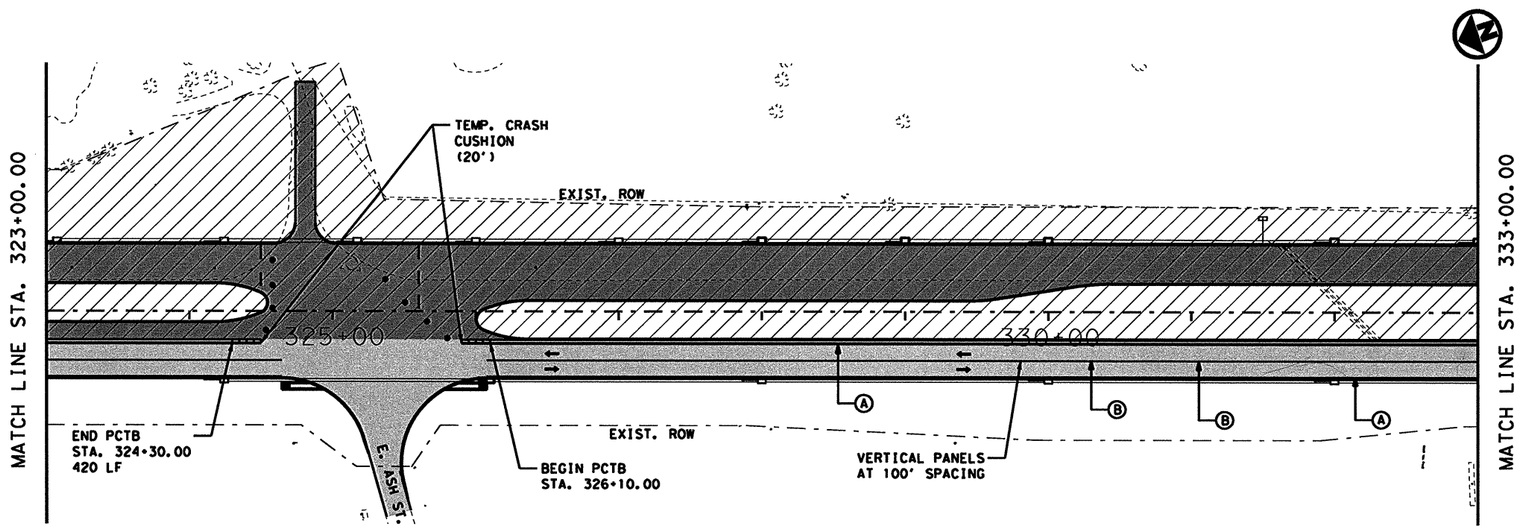

STATE OF TEXAS
NICHOLAS VON SPENCER
93702
LICENSED PROFESSIONAL ENGINEER

Nicholas V Spencer, P.E. 4-8-11
Signature of Registrant & Date

Texas Department of Transportation
© 2011

SH 289 TRAFFIC CONTROL PLAN PHASE II

SCALE: 1"=100' SHEET 2 OF 12

DESIGN	FED. RD. DIV. NO.	STATE PROJECT NO.		HIGHWAY NO.
AMW	6	(SEE TITLE SHEET)		SH 289
GRAPHICS AMW	STATE	DISTRICT	COUNTY	SHEET NO.
CHECK NVS	TEXAS	DALLAS	COLLIN	83
CHECK NVS	CONTROL	SECTION	JOB	
	0091	04	055	

T:\DALDGN#A\SH 289 Celina\THE PLANS\Traffic Control\Phase II\tcp*phaseII*2.dgn

4/7/2011 3:37:46 PM

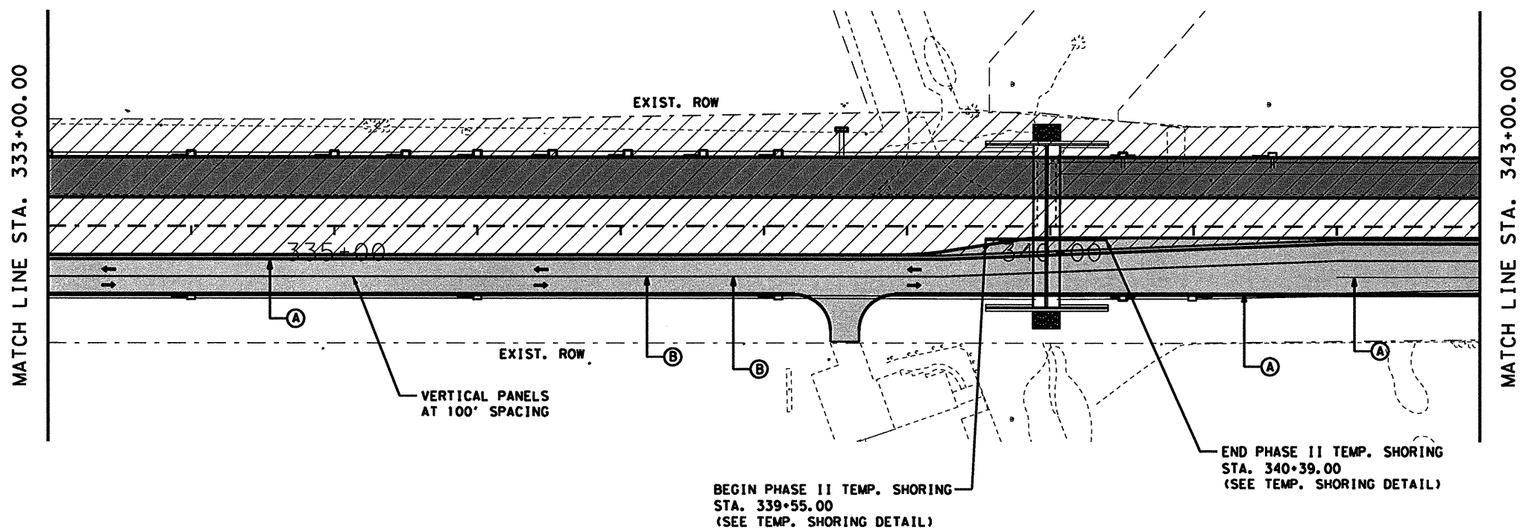

LEGEND

- CONSTRUCTION ZONE THIS PHASE
- PHASE CONSTRUCTION FOR MAJOR INTERSECTIONS
- PAVEMENT CONSTRUCTION THIS PHASE
- PAVEMENT CONSTRUCTION PREVIOUS PHASE
- TEMPORARY ASPHALT PAVEMENT
- PORTABLE CONCRETE TRAFFIC BARRIER (PCTB)
- TEMPORARY CRASH CUSHION
- CHANNELIZATION DEVICES
- TYPE III BARRICADE
- SIGN
- TEMPORARY TRAFFIC
- (A) WK ZN PAV MRK. REMOV (W) 4" (SLD)
- (B) WK ZN PAV MRK. REMOV (Y) 4" (SLD W/MRKR)

NOTES:

1. SEE PROJECT LAYOUT SHEETS FOR ADVANCE WARNING AND SIGN PLACEMENT.

2. THE CONTRACTOR IS REQUIRED TO PROVIDE ACCESS TO PRIVATE PROPERTY AND INTERSECTING ROADWAYS AT ALL TIMES.

4. THE CONTRACTOR IS REQUIRED TO MAINTAIN POSITIVE DRAINAGE DURING CONSTRUCTION.

5. SEE MISCELLANEOUS TCP DETAILS FOR TYPICAL DRIVEWAYS AND UNSIGNALIZED INTERSECTIONS.

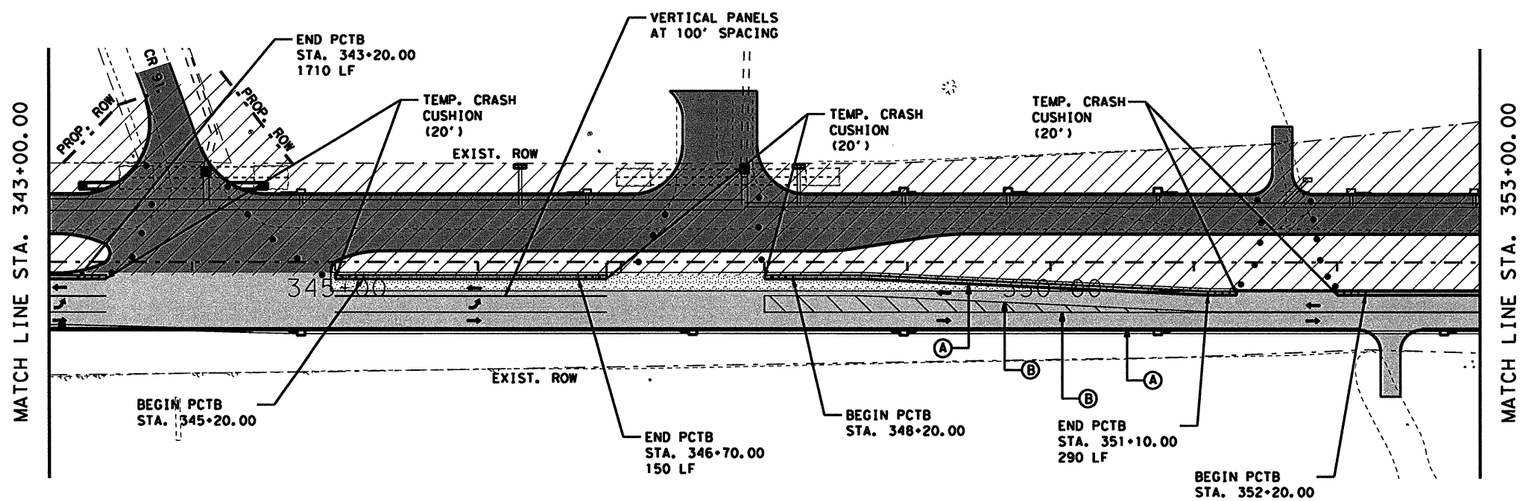

STATE OF TEXAS
NICHOLAS VON SPENCER
93702
LICENSED PROFESSIONAL ENGINEER

Nicholas V Spencer, P.E. 4-8-11
Signature of Registrant & Date

Texas Department of Transportation
© 2011

SH 289
TRAFFIC CONTROL PLAN
PHASE II

SCALE: 1"=100' SHEET 3 OF 12

DESIGN	FED. RD. DIV. NO.	STATE PROJECT NO.		HIGHWAY NO.
AMW	6	(SEE TITLE SHEET)		SH 289
GRAPHICS	STATE	DISTRICT	COUNTY	SHEET NO.
AMW	TEXAS	DALLAS	COLLIN	84
CHECK	CONTROL	SECTION	JOB	
NVS	0091	04	055	
CHECK NVS				

T:\DALDGN*A\SH 289 Celina\THE PLANS\Traffic Control\Phase II\topsphaseII*3.dgn

4/7/2011 3:37:59 PM

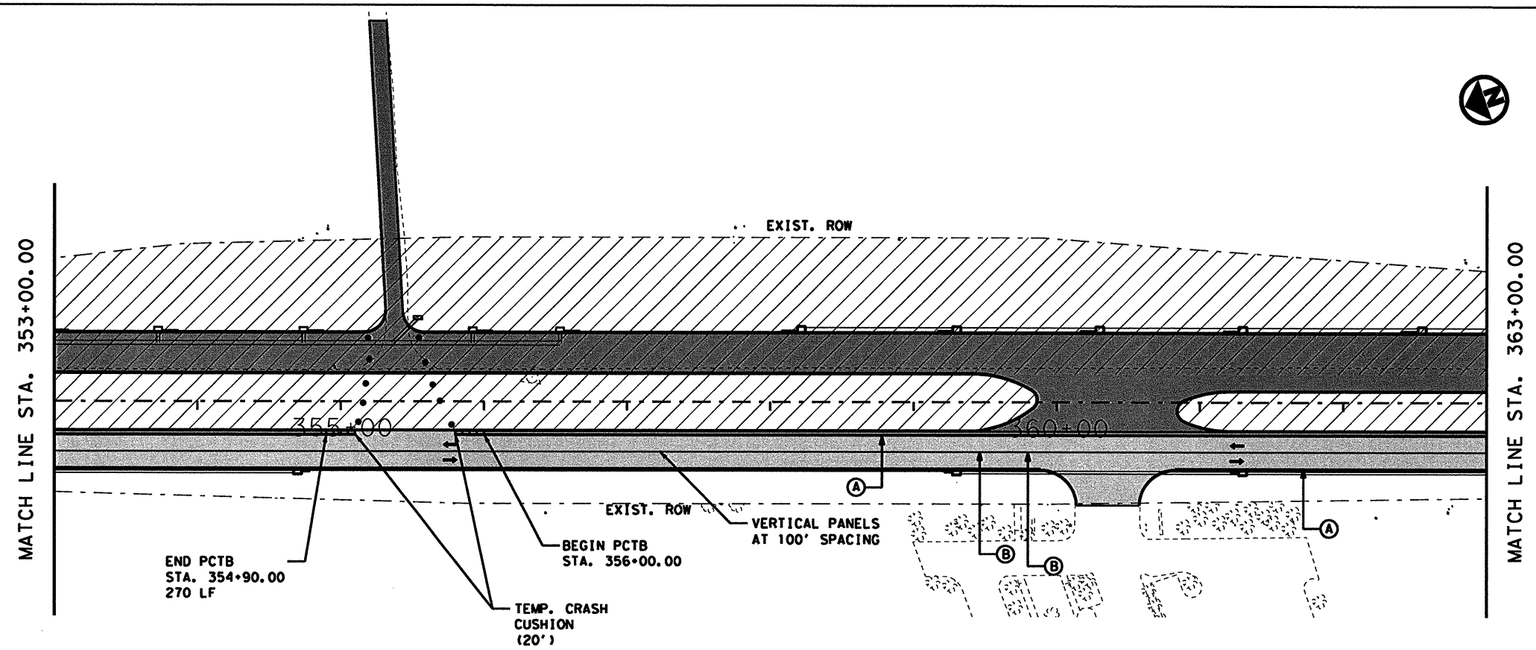

LEGEND

- CONSTRUCTION ZONE THIS PHASE
- PHASE CONSTRUCTION FOR MAJOR INTERSECTIONS
- PAVEMENT CONSTRUCTION THIS PHASE
- PAVEMENT CONSTRUCTION PREVIOUS PHASE
- TEMPORARY ASPHALT PAVEMENT
- PORTABLE CONCRETE TRAFFIC BARRIER (PCTB)
- TEMPORARY CRASH CUSHION
- CHANNELIZATION DEVICES
- TYPE III BARRICADE
- SIGN
- TEMPORARY TRAFFIC
- (A) WK ZN PAV MRK. REMOV (W) 4" (SLD)
- (B) WK ZN PAV MRK. REMOV (Y) 4" (SLD W/MRKR)

NOTES:

1. SEE PROJECT LAYOUT SHEETS FOR ADVANCE WARNING AND SIGN PLACEMENT.

2. THE CONTRACTOR IS REQUIRED TO PROVIDE ACCESS TO PRIVATE PROPERTY AND INTERSECTING ROADWAYS AT ALL TIMES.

4. THE CONTRACTOR IS REQUIRED TO MAINTAIN POSITIVE DRAINAGE DURING CONSTRUCTION.

5. SEE MISCELLANEOUS TCP DETAILS FOR TYPICAL DRIVEWAYS AND UNSIGNALIZED INTERSECTIONS.

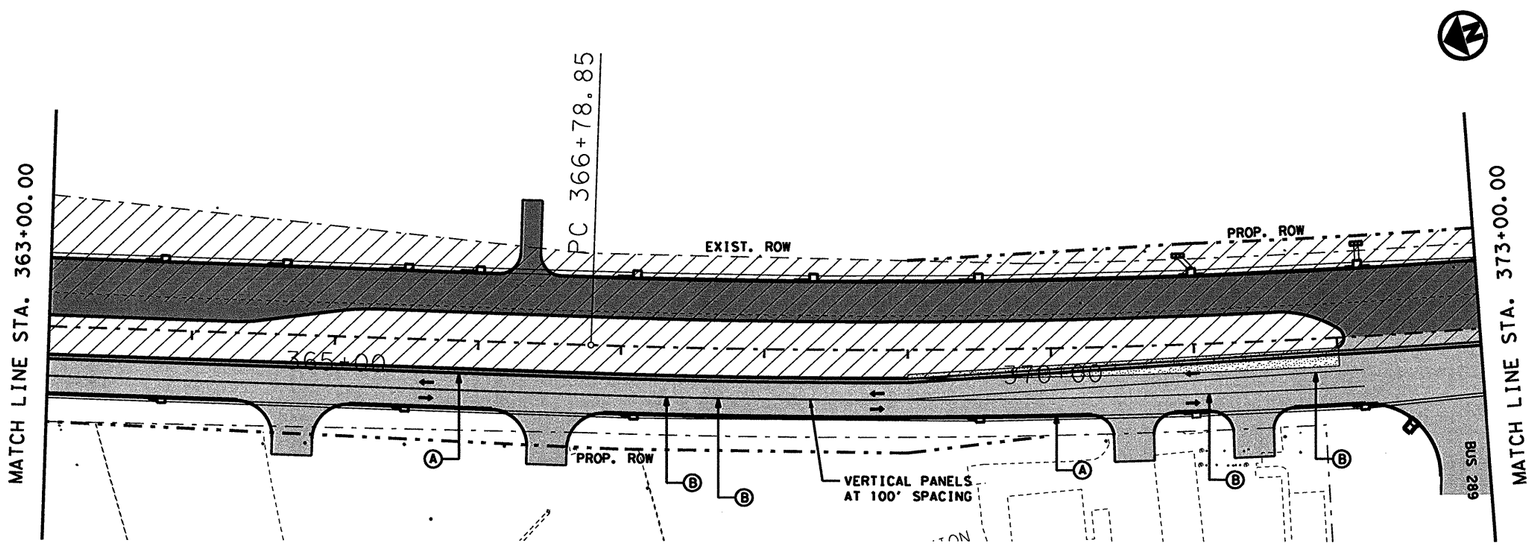

STATE OF TEXAS
NICHOLAS VON SPENCER
93702
LICENSED
PROFESSIONAL ENGINEER

Signature of Registrant & Date, P.E. 4-8-11

Texas Department of Transportation
© 2011

SH 289 TRAFFIC CONTROL PLAN PHASE II

SCALE: 1"=100'

SHEET 4 OF 12

DESIGN	FED. RD. DIV. NO.	STATE PROJECT NO.		HIGHWAY NO.
AMW	6	(SEE TITLE SHEET)		SH 289
GRAPHICS	STATE	DISTRICT	COUNTY	SHEET NO.
AMW	TEXAS	DALLAS	COLLIN	85
CHECK	CONTROL	SECTION	JOB	
NVS	0091	04	055	
CHECK NVS				

T:\DALDGN*A\SH 289 Celina\THE PLANS\Traffic Control\Phase II\tcp*phaseII*4.dgn

4/7/2011 3:38:13 PM
T:\DALDGN*A\SH 289 Collin\THE PLANS\Traffic Control\Phase II\tcp*phaseII*5.dgn

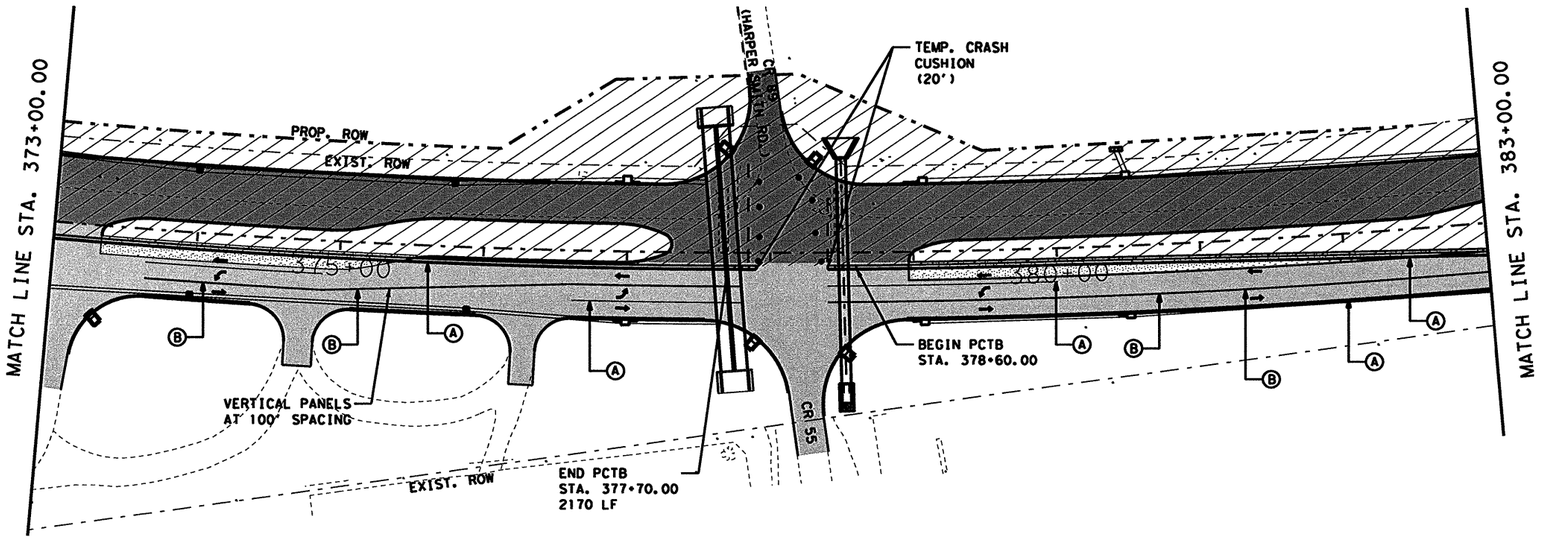

LEGEND

- CONSTRUCTION ZONE THIS PHASE
- PHASE CONSTRUCTION FOR MAJOR INTERSECTIONS
- PAVEMENT CONSTRUCTION THIS PHASE
- PAVEMENT CONSTRUCTION PREVIOUS PHASE
- TEMPORARY ASPHALT PAVEMENT
- PORTABLE CONCRETE TRAFFIC BARRIER (PCTB)
- TEMPORARY CRASH CUSHION
- CHANNELIZATION DEVICES
- TYPE III BARRICADE
- SIGN
- TEMPORARY TRAFFIC
- (A) WK ZN PAV MRK. REMOV (W) 4" (SLD)
- (B) WK ZN PAV MRK. REMOV (Y) 4" (SLD W/MRKR)

NOTES:

1. SEE PROJECT LAYOUT SHEETS FOR ADVANCE WARNING AND SIGN PLACEMENT.

2. THE CONTRACTOR IS REQUIRED TO PROVIDE ACCESS TO PRIVATE PROPERTY AND INTERSECTING ROADWAYS AT ALL TIMES.

4. THE CONTRACTOR IS REQUIRED TO MAINTAIN POSITIVE DRAINAGE DURING CONSTRUCTION.

5. SEE MISCELLANEOUS TCP DETAILS FOR TYPICAL DRIVEWAYS AND UNSIGNALIZED INTERSECTIONS.

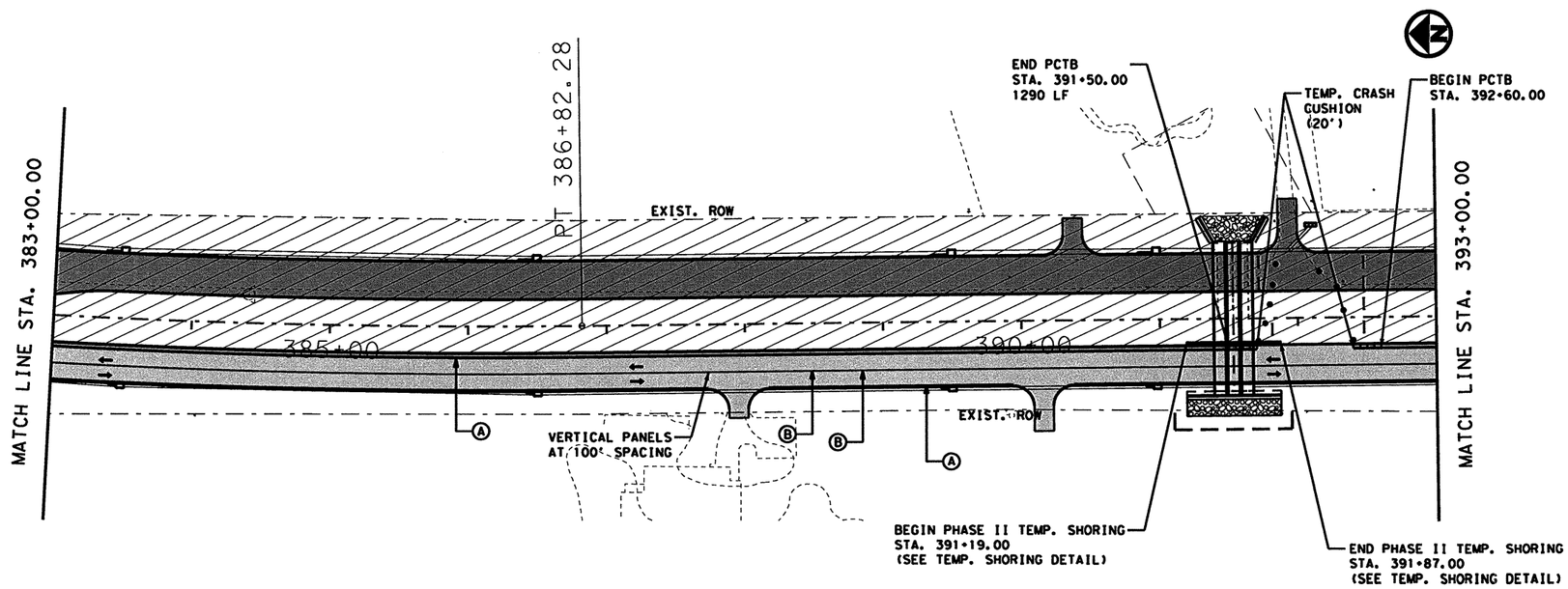

STATE OF TEXAS
NICHOLAS VON SPENCER
93702
LICENSED PROFESSIONAL ENGINEER

Signature of Registrant & Date, P.E. 4-8-11

Texas Department of Transportation
© 2011

SH 289 TRAFFIC CONTROL PLAN PHASE II

SCALE: 1"=100'

SHEET 5 OF 12

DESIGN	FED. RD. DIV. NO.	STATE PROJECT NO.		HIGHWAY NO.
AMW	6	(SEE TITLE SHEET)		SH 289
GRAPHICS AMW	STATE	DISTRICT	COUNTY	SHEET NO.
CHECK NVS	TEXAS	DALLAS	COLLIN	86
CHECK NVS	CONTROL	SECTION	JOB	
	0091	04	055	

4/7/2011 3:38:25 PM

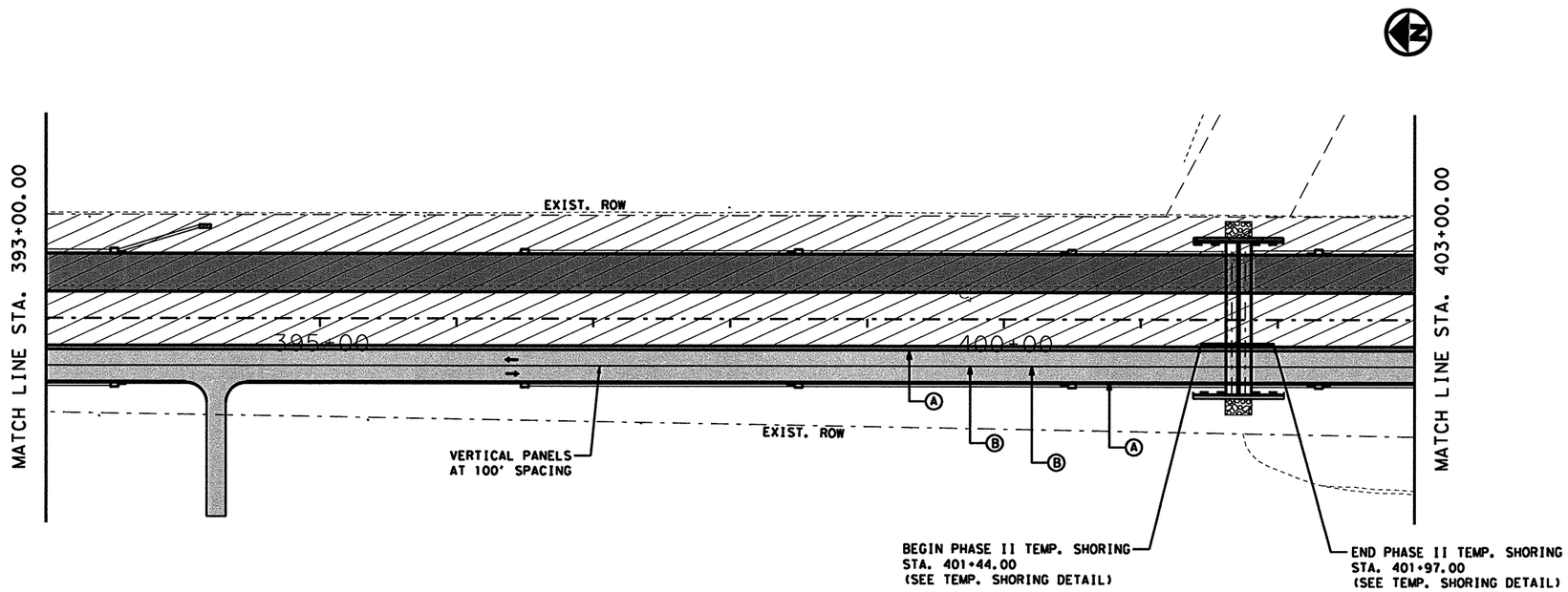

LEGEND

- CONSTRUCTION ZONE THIS PHASE
- PHASE CONSTRUCTION FOR MAJOR INTERSECTIONS
- PAVEMENT CONSTRUCTION THIS PHASE
- PAVEMENT CONSTRUCTION PREVIOUS PHASE
- TEMPORARY ASPHALT PAVEMENT
- PORTABLE CONCRETE TRAFFIC BARRIER (PCTB)
- TEMPORARY CRASH CUSHION
- CHANNELIZATION DEVICES
- TYPE III BARRICADE
- SIGN
- TEMPORARY TRAFFIC
- (A) WK ZN PAV MRK. REMOV (W) 4" (SLD)
- (B) WK ZN PAV MRK. REMOV (Y) 4" (SLD W/MRKR)

NOTES:

1. SEE PROJECT LAYOUT SHEETS FOR ADVANCE WARNING AND SIGN PLACEMENT.

2. THE CONTRACTOR IS REQUIRED TO PROVIDE ACCESS TO PRIVATE PROPERTY AND INTERSECTING ROADWAYS AT ALL TIMES.

4. THE CONTRACTOR IS REQUIRED TO MAINTAIN POSITIVE DRAINAGE DURING CONSTRUCTION.

5. SEE MISCELLANEOUS TCP DETAILS FOR TYPICAL DRIVEWAYS AND UNSIGNALIZED INTERSECTIONS.

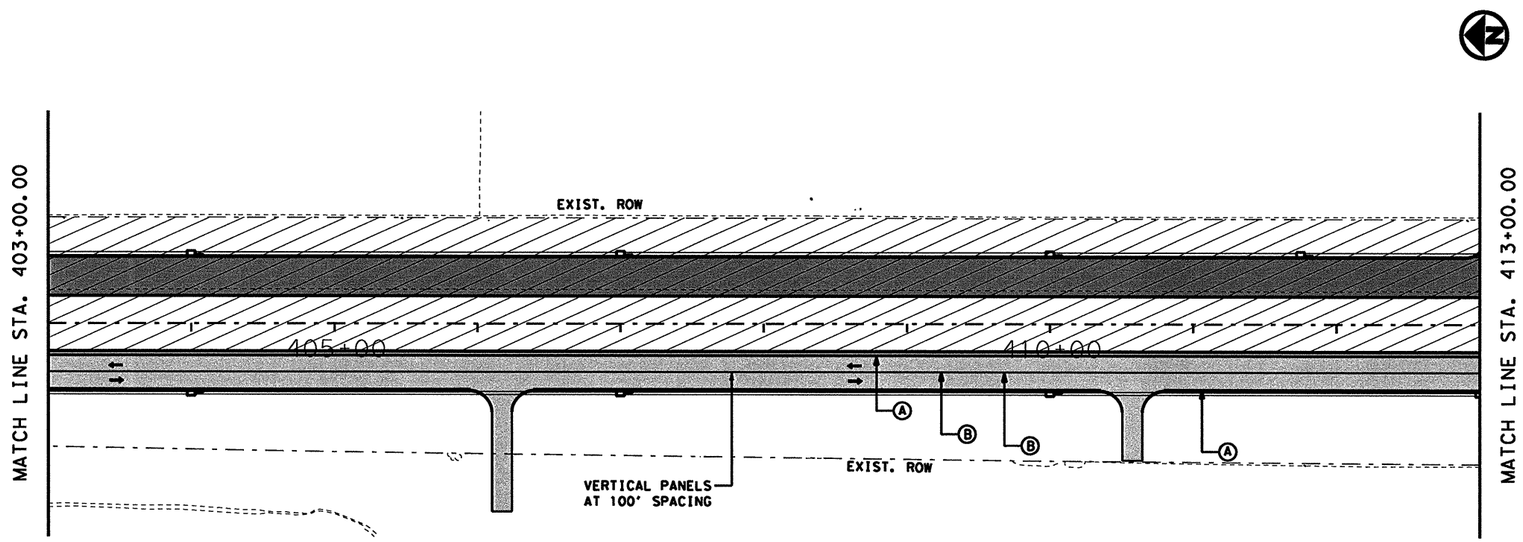

STATE OF TEXAS
NICHOLAS VON SPENCER
93702
LICENSED
PROFESSIONAL ENGINEER

Nicholas Von Spencer, P.E. 4-8-11
Signature of Registrant & Date

Texas Department of Transportation
© 2011

SH 289 TRAFFIC CONTROL PLAN PHASE II

SCALE: 1"=100' SHEET 6 OF 12

DESIGN	FED. RD. DIV. NO.	STATE PROJECT NO.		HIGHWAY NO.
AMW	6	(SEE TITLE SHEET)		SH 289
GRAPHICS AMW	STATE	DISTRICT	COUNTY	SHEET NO.
CHECK NVS	TEXAS	DALLAS	COLLIN	87
CHECK NVS	CONTROL 0091	SECTION 04	JOB 055	

T:\DALDGN*A\SH 289 Celina\THE PLANS\Traffic Control\Phase II\tcp*phaseII*6.dgn

4/7/2011 3:38:39 PM

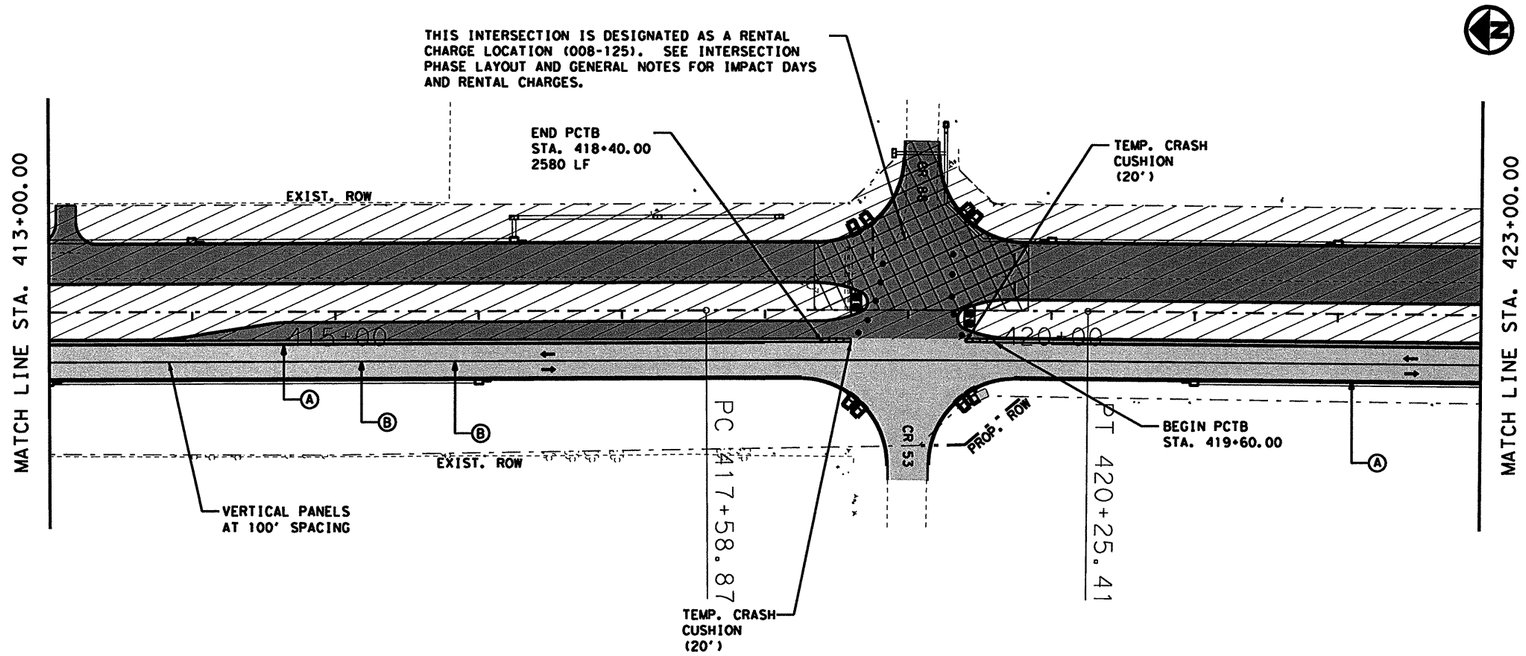

LEGEND

- CONSTRUCTION ZONE THIS PHASE
- PHASE CONSTRUCTION FOR MAJOR INTERSECTIONS
- PAVEMENT CONSTRUCTION THIS PHASE
- PAVEMENT CONSTRUCTION PREVIOUS PHASE
- TEMPORARY ASPHALT PAVEMENT
- PORTABLE CONCRETE TRAFFIC BARRIER (PCTB)
- TEMPORARY CRASH CUSHION
- CHANNELIZATION DEVICES
- TYPE III BARRICADE
- SIGN
- TEMPORARY TRAFFIC
- (A) WK ZN PAV MRK. REMOV (W) 4" (SLD)
- (B) WK ZN PAV MRK. REMOV (Y) 4" (SLD W/MRKR)

NOTES:

1. SEE PROJECT LAYOUT SHEETS FOR ADVANCE WARNING AND SIGN PLACEMENT.

2. THE CONTRACTOR IS REQUIRED TO PROVIDE ACCESS TO PRIVATE PROPERTY AND INTERSECTING ROADWAYS AT ALL TIMES.

4. THE CONTRACTOR IS REQUIRED TO MAINTAIN POSITIVE DRAINAGE DURING CONSTRUCTION.

5. SEE MISCELLANEOUS TCP DETAILS FOR TYPICAL DRIVEWAYS AND UNSIGNALIZED INTERSECTIONS.

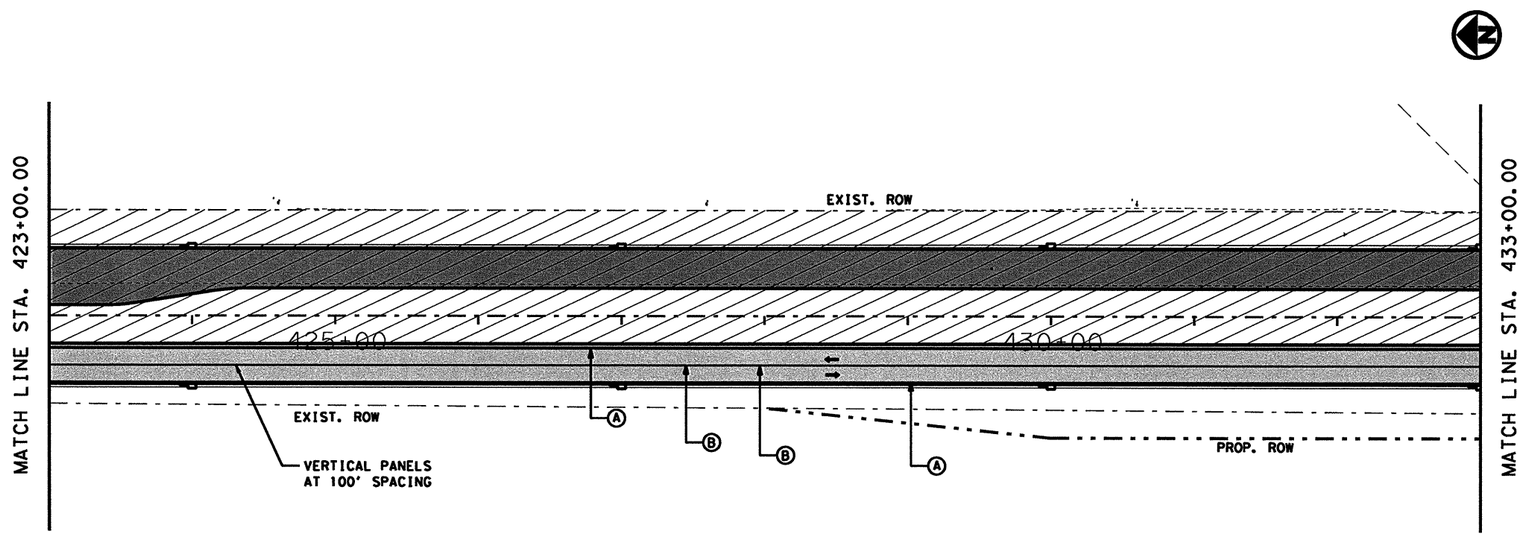

STATE OF TEXAS
NICHOLAS VON SPENCER
93702
LICENSED
PROFESSIONAL ENGINEER

Nicholas V Spencer, P.E. 4-8-11
Signature of Registrant & Date

Texas Department of Transportation
© 2011

SH 289 TRAFFIC CONTROL PLAN PHASE II

SCALE: 1"=100'

SHEET 7 OF 12

DESIGN	FED. RD. DIV. NO.	STATE PROJECT NO.		HIGHWAY NO.
AMW	6	(SEE TITLE SHEET)		SH 289
GRAPHICS AMW	STATE	DISTRICT	COUNTY	SHEET NO.
CHECK NVS	TEXAS	DALLAS	COLLIN	88
CHECK NVS	CONTROL	SECTION	JOB	
	0091	04	055	

T:\DALDGN#A\SH 289 Celina\THE PLANS\Traffic Control\Phase II\tcp*phaseII*7.dgn

R-201104-01

4/7/2011 3:38:51 PM

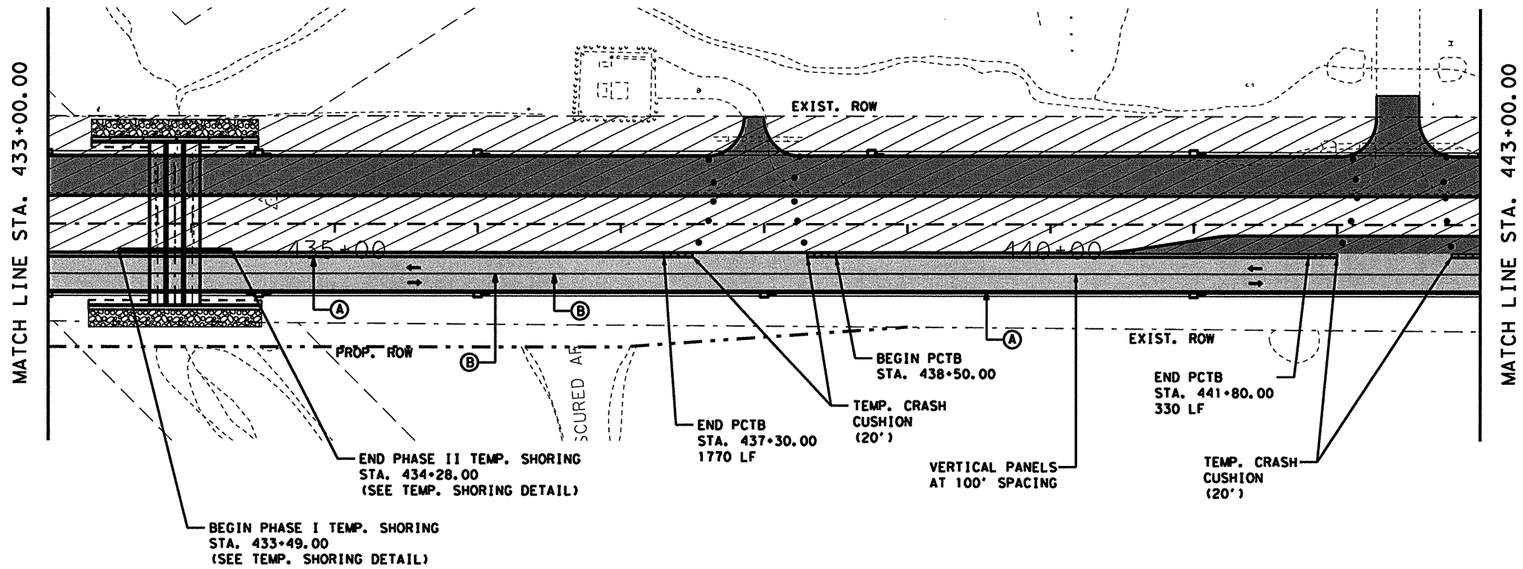

LEGEND

- CONSTRUCTION ZONE THIS PHASE
- PHASE CONSTRUCTION FOR MAJOR INTERSECTIONS
- PAVEMENT CONSTRUCTION THIS PHASE
- PAVEMENT CONSTRUCTION PREVIOUS PHASE
- TEMPORARY ASPHALT PAVEMENT
- PORTABLE CONCRETE TRAFFIC BARRIER (PCTB)
- TEMPORARY CRASH CUSHION
- CHANNELIZATION DEVICES
- TYPE III BARRICADE
- SIGN
- TEMPORARY TRAFFIC
- (A) WK ZN PAV MRK. REMOV (W) 4" (SLD)
- (B) WK ZN PAV MRK. REMOV (Y) 4" (SLD W/MRKR)

NOTES:

1. SEE PROJECT LAYOUT SHEETS FOR ADVANCE WARNING AND SIGN PLACEMENT.

2. THE CONTRACTOR IS REQUIRED TO PROVIDE ACCESS TO PRIVATE PROPERTY AND INTERSECTING ROADWAYS AT ALL TIMES.

4. THE CONTRACTOR IS REQUIRED TO MAINTAIN POSITIVE DRAINAGE DURING CONSTRUCTION.

5. SEE MISCELLANEOUS TCP DETAILS FOR TYPICAL DRIVEWAYS AND UNSIGNALIZED INTERSECTIONS.

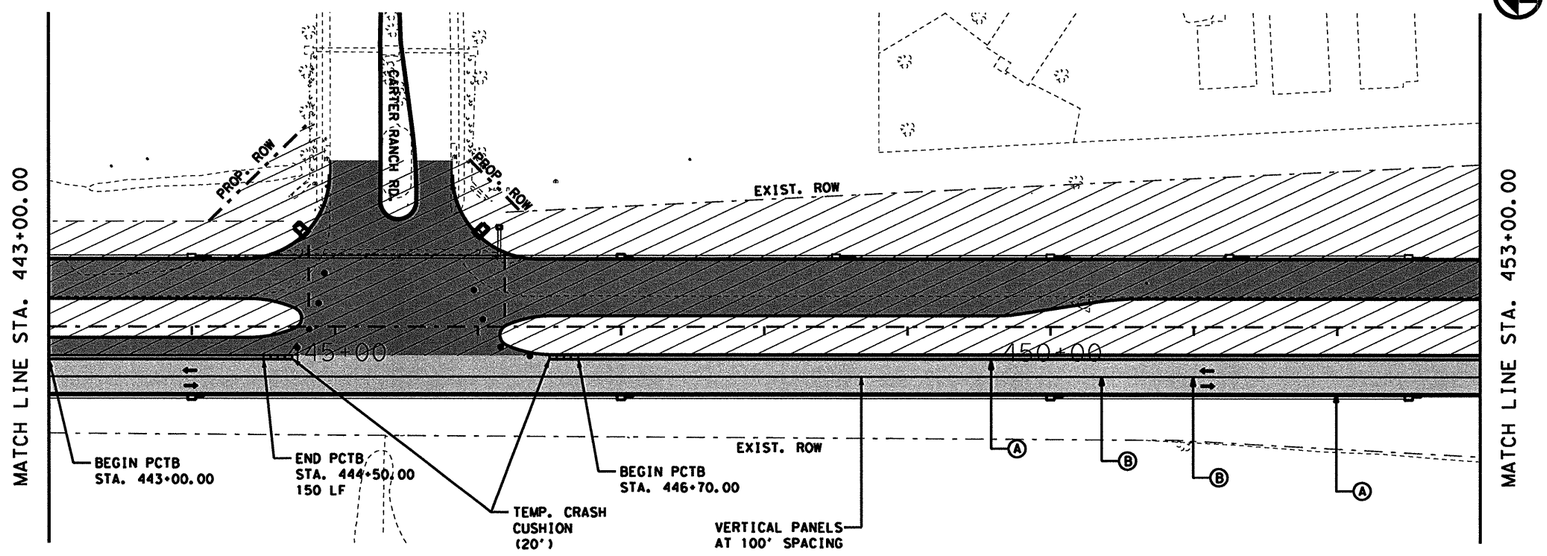

STATE OF TEXAS
NICHOLAS VON SPENCER
93702
LICENSED
PROFESSIONAL ENGINEER

Signature of Registrant & Date, P.E. 4-8-11

Texas Department of Transportation
© 2011

SH 289 TRAFFIC CONTROL PLAN PHASE II

SCALE: 1"=100'

SHEET 8 OF 12

DESIGN	FED. RD. DIV. NO.	STATE PROJECT NO.		HIGHWAY NO.
AMW	6	(SEE TITLE SHEET)		SH 289
GRAPHICS	STATE	DISTRICT	COUNTY	SHEET NO.
AMW	TEXAS	DALLAS	COLLIN	89
CHECK	CONTROL	SECTION	JOB	
NVS	0091	04	055	
CHECK NVS				

T:\DALDGN#A\SH 289 Celina\THE PLANS\Traffic Control\Phase II\tcp*phaseII*8.dgn

4/7/2011 3:39:05 PM
T:\DALDGN#A\SH 289 Celina\THE PLANS\Traffic Control\Phase II\tcp#phaseII#9.dgn

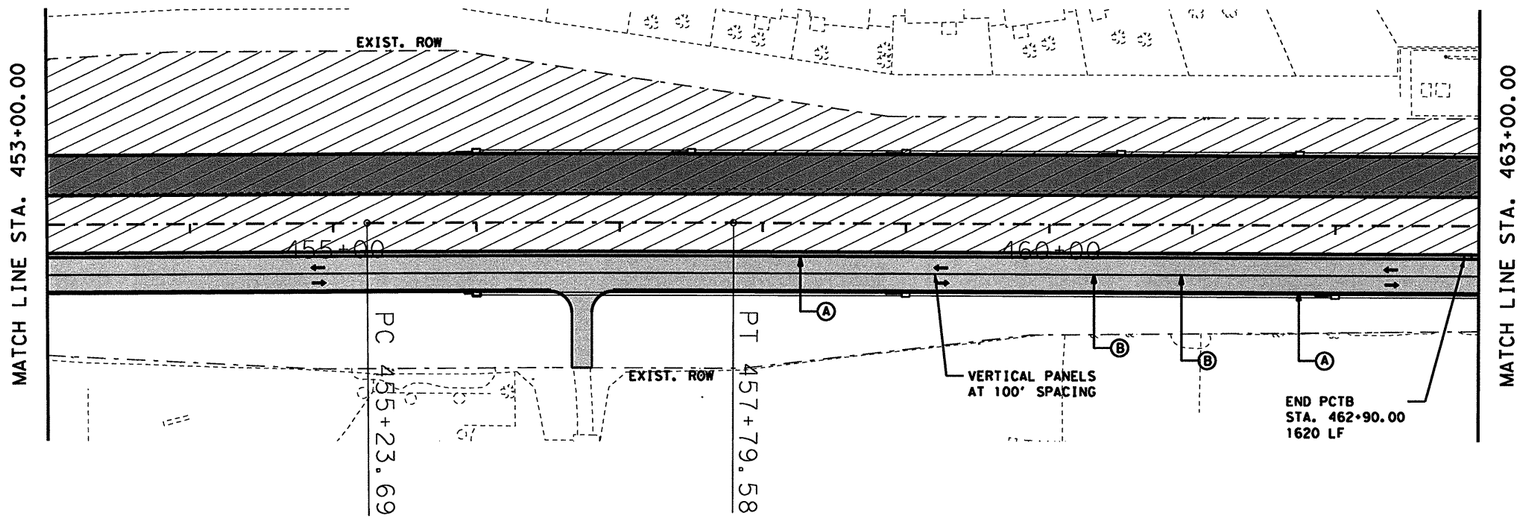

LEGEND

- CONSTRUCTION ZONE THIS PHASE
- PHASE CONSTRUCTION FOR MAJOR INTERSECTIONS
- PAVEMENT CONSTRUCTION THIS PHASE
- PAVEMENT CONSTRUCTION PREVIOUS PHASE
- TEMPORARY ASPHALT PAVEMENT
- PORTABLE CONCRETE TRAFFIC BARRIER (PCTB)
- TEMPORARY CRASH CUSHION
- CHANNELIZATION DEVICES
- TYPE III BARRICADE
- SIGN
- TEMPORARY TRAFFIC
- (A) WK ZN PAV MRK. REMOV (W) 4" (SLD)
- (B) WK ZN PAV MRK. REMOV (Y) 4" (SLD W/MRKR)

NOTES:

1. SEE PROJECT LAYOUT SHEETS FOR ADVANCE WARNING AND SIGN PLACEMENT.

2. THE CONTRACTOR IS REQUIRED TO PROVIDE ACCESS TO PRIVATE PROPERTY AND INTERSECTING ROADWAYS AT ALL TIMES.

4. THE CONTRACTOR IS REQUIRED TO MAINTAIN POSITIVE DRAINAGE DURING CONSTRUCTION.

5. SEE MISCELLANEOUS TCP DETAILS FOR TYPICAL DRIVEWAYS AND UNSIGNALIZED INTERSECTIONS.

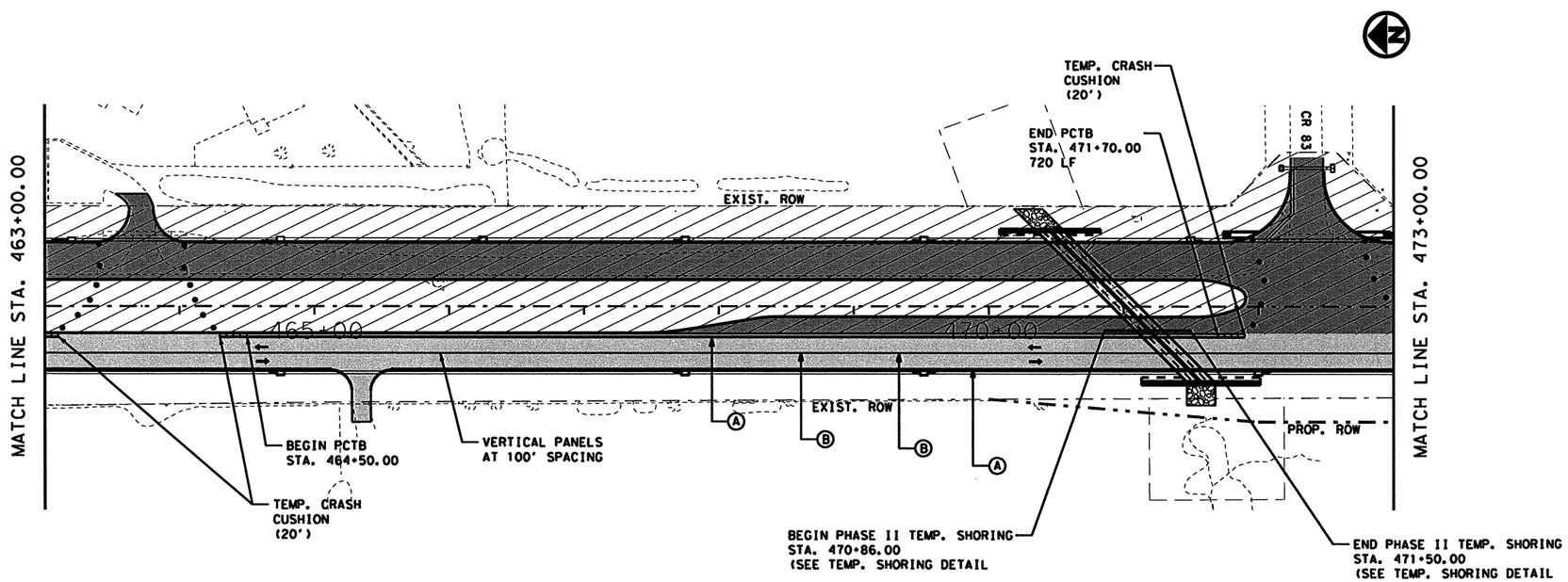

STATE OF TEXAS
NICHOLAS VON SPENCER
93702
LICENSED PROFESSIONAL ENGINEER

Signature of Registrant, P.E. & Date 4-8-11

Texas Department of Transportation
© 2011

SH 289
TRAFFIC CONTROL PLAN
PHASE II

SCALE: 1"=100'

SHEET 9 OF 12

DESIGN	FED. RD. DIV. NO.	STATE PROJECT NO.		HIGHWAY NO.
AMW	6	(SEE TITLE SHEET)		SH 289
GRAPHICS	STATE	DISTRICT	COUNTY	SHEET NO.
AMW	TEXAS	DALLAS	COLLIN	90
CHECK	CONTROL	SECTION	JOB	
NVS	0091	04	055	
CHECK NVS				

4/7/2011 3:39:17 PM

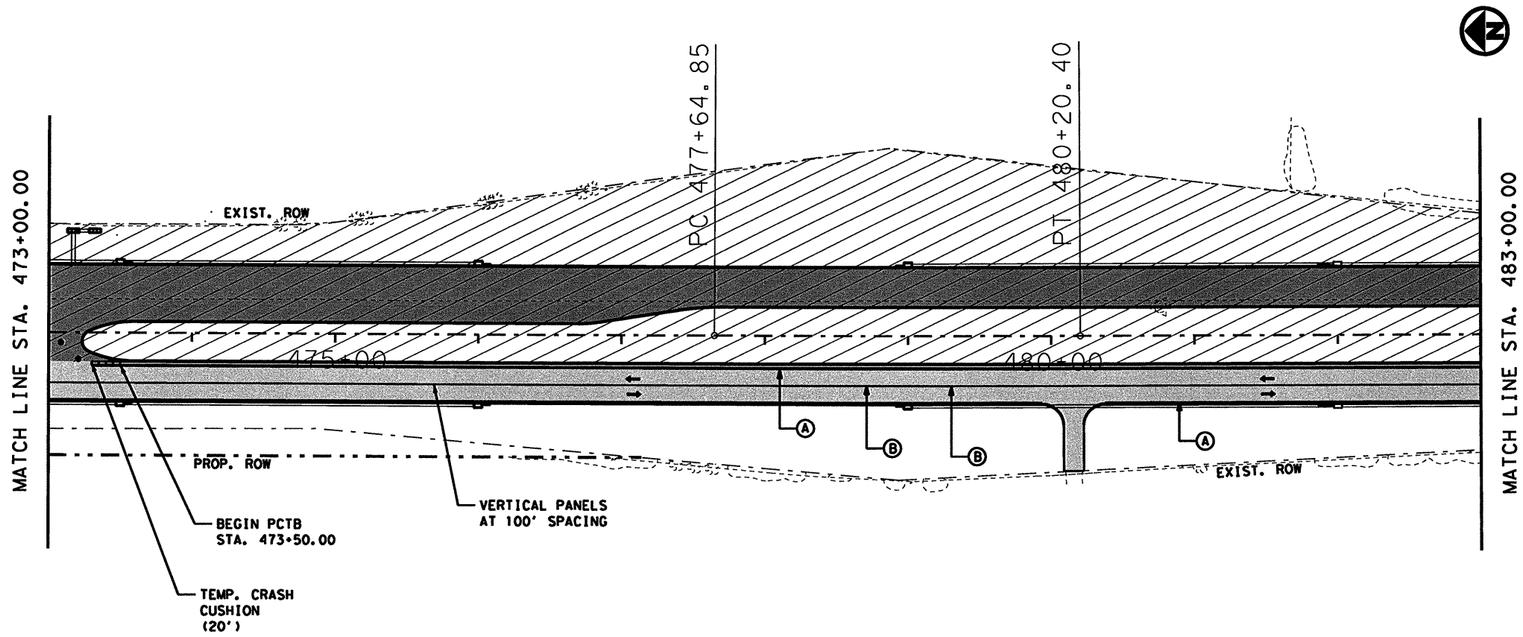

LEGEND

- CONSTRUCTION ZONE THIS PHASE
- PHASE CONSTRUCTION FOR MAJOR INTERSECTIONS
- PAVEMENT CONSTRUCTION THIS PHASE
- PAVEMENT CONSTRUCTION PREVIOUS PHASE
- TEMPORARY ASPHALT PAVEMENT
- PORTABLE CONCRETE TRAFFIC BARRIER (PCTB)
- TEMPORARY CRASH CUSHION
- CHANNELIZATION DEVICES
- TYPE III BARRICADE
- SIGN
- TEMPORARY TRAFFIC
- (A) WK ZN PAV MRK. REMOV (W) 4" (SLD)
- (B) WK ZN PAV MRK. REMOV (Y) 4" (SLD W/MRKR)

NOTES:

1. SEE PROJECT LAYOUT SHEETS FOR ADVANCE WARNING AND SIGN PLACEMENT.

2. THE CONTRACTOR IS REQUIRED TO PROVIDE ACCESS TO PRIVATE PROPERTY AND INTERSECTING ROADWAYS AT ALL TIMES.

4. THE CONTRACTOR IS REQUIRED TO MAINTAIN POSITIVE DRAINAGE DURING CONSTRUCTION.

5. SEE MISCELLANEOUS TCP DETAILS FOR TYPICAL DRIVEWAYS AND UNSIGNALIZED INTERSECTIONS.

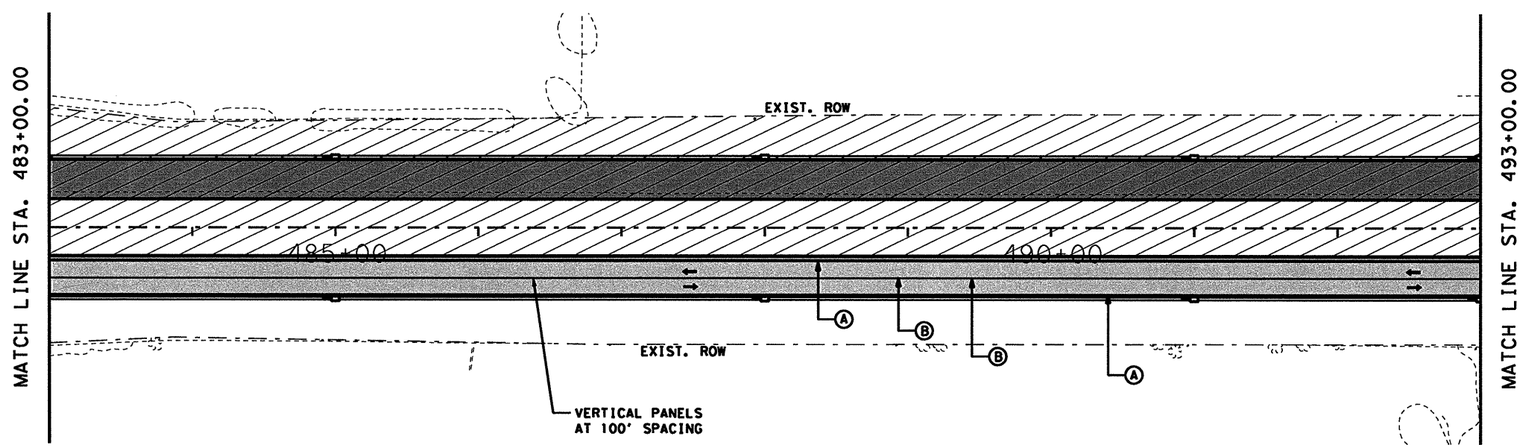

STATE OF TEXAS
NICHOLAS VON SPENCER
93702
LICENSED
PROFESSIONAL ENGINEER

Nicholas Von Spencer, P.E. 4-8-11
Signature of Registrant & Date

Texas Department of Transportation
© 2011

SH 289 TRAFFIC CONTROL PLAN PHASE II

SCALE: 1"=100'

SHEET 10 OF 12

DESIGN	FED. RD. DIV. NO.	STATE PROJECT NO.		HIGHWAY NO.
AMW	6	(SEE TITLE SHEET)		SH 289
GRAPHICS	STATE	DISTRICT	COUNTY	SHEET NO.
AMW	TEXAS	DALLAS	COLLIN	91
CHECK	CONTROL	SECTION	JOB	
NVS	0091	04	055	
CHECK				
NVS				

T:\DALDGN*A\SH 289 Celina\THE PLANS\Traffic Control\Phase II\tcp*phaseII*10.dgn

4/7/2011 3:39:30 PM

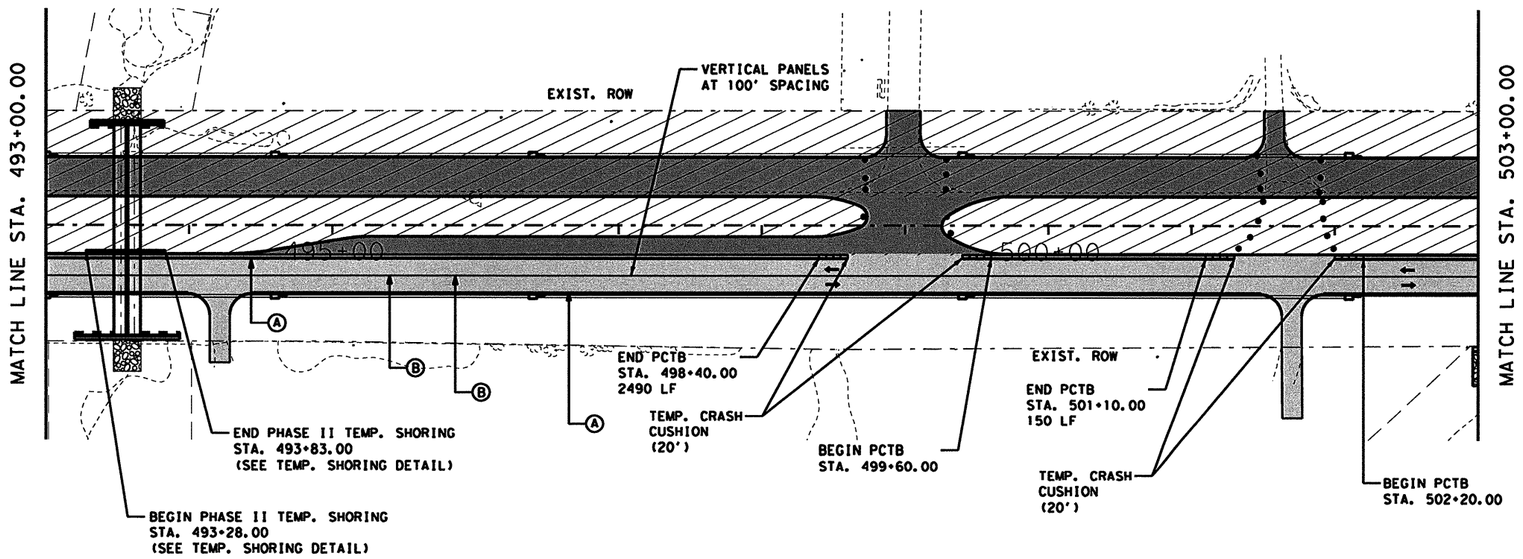

LEGEND

- CONSTRUCTION ZONE THIS PHASE
- PHASE CONSTRUCTION FOR MAJOR INTERSECTIONS
- PAVEMENT CONSTRUCTION THIS PHASE
- PAVEMENT CONSTRUCTION PREVIOUS PHASE
- TEMPORARY ASPHALT PAVEMENT
- PORTABLE CONCRETE TRAFFIC BARRIER (PCTB)
- TEMPORARY CRASH CUSHION
- CHANNELIZATION DEVICES
- TYPE III BARRICADE
- SIGN
- TEMPORARY TRAFFIC
- (A) WK ZN PAV MRK. REMOV (W) 4" (SLD)
- (B) WK ZN PAV MRK. REMOV (Y) 4" (SLD W/MRKR)

NOTES:

1. SEE PROJECT LAYOUT SHEETS FOR ADVANCE WARNING AND SIGN PLACEMENT.

2. THE CONTRACTOR IS REQUIRED TO PROVIDE ACCESS TO PRIVATE PROPERTY AND INTERSECTING ROADWAYS AT ALL TIMES.

4. THE CONTRACTOR IS REQUIRED TO MAINTAIN POSITIVE DRAINAGE DURING CONSTRUCTION.

5. SEE MISCELLANEOUS TCP DETAILS FOR TYPICAL DRIVEWAYS AND UNSIGNALIZED INTERSECTIONS.

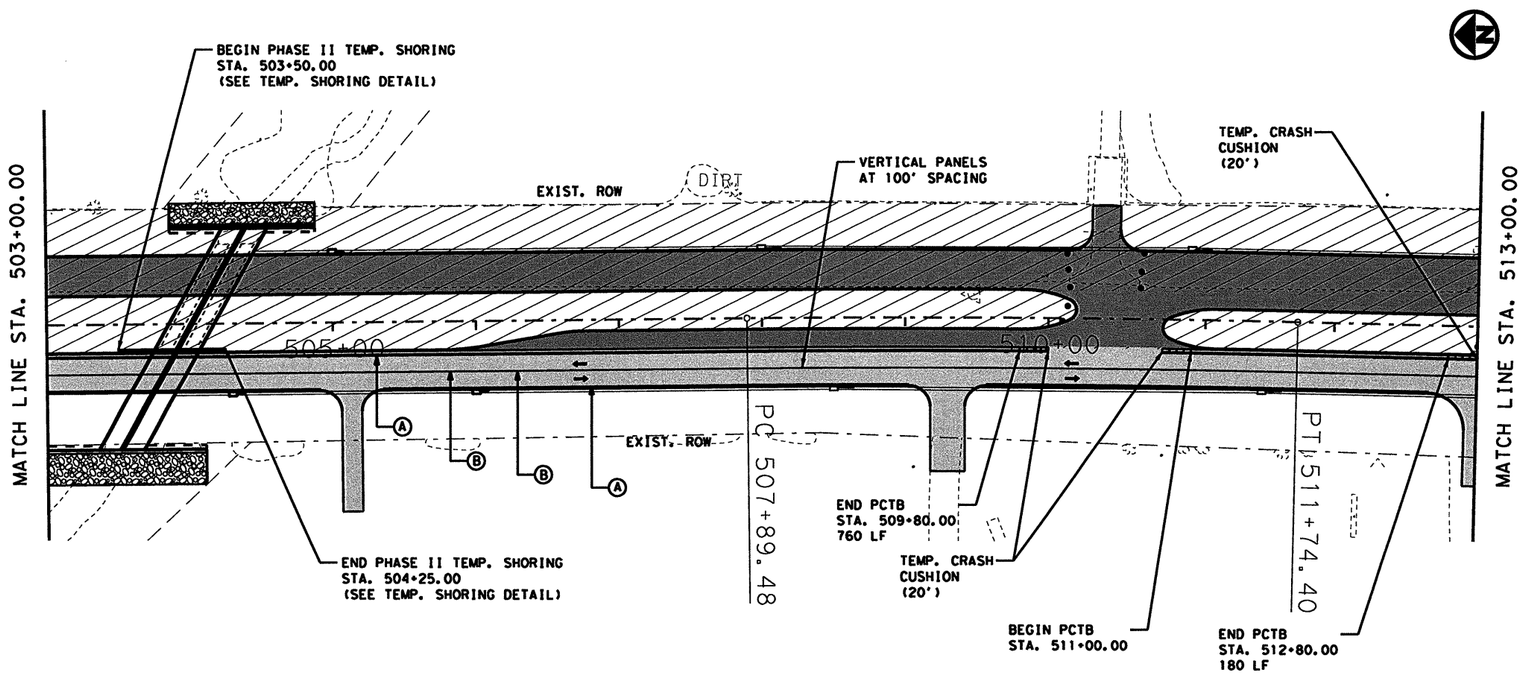

STATE OF TEXAS
NICHOLAS VON SPENCER
93702
LICENSED
PROFESSIONAL ENGINEER

Nicholas V Spencer, P.E. 4-8-11
Signature of Registrant & Date

Texas Department of Transportation
© 2011

SH 289 TRAFFIC CONTROL PLAN PHASE II

SCALE: 1"=100' SHEET 11 OF 12

DESIGN	FED. RD. DIV. NO.	STATE PROJECT NO.		HIGHWAY NO.
AMW	6	(SEE TITLE SHEET)		SH 289
GRAPHICS AMW	STATE	DISTRICT	COUNTY	SHEET NO.
CHECK NVS	TEXAS	DALLAS	COLLIN	92
CHECK NVS	CONTROL 0091	SECTION 04	JOB 055	

T:\DALDGN#A\SH 289 Celina\THE PLANS\Traffic Control\Phase II\tcp#phaseII#11.dgn

4/7/2011 3:39:40 PM
T:\DALDGN*A\SH 289 Celina\THE PLANS\Traffic Control\Phase II\tcp*phaseII*12.dgn

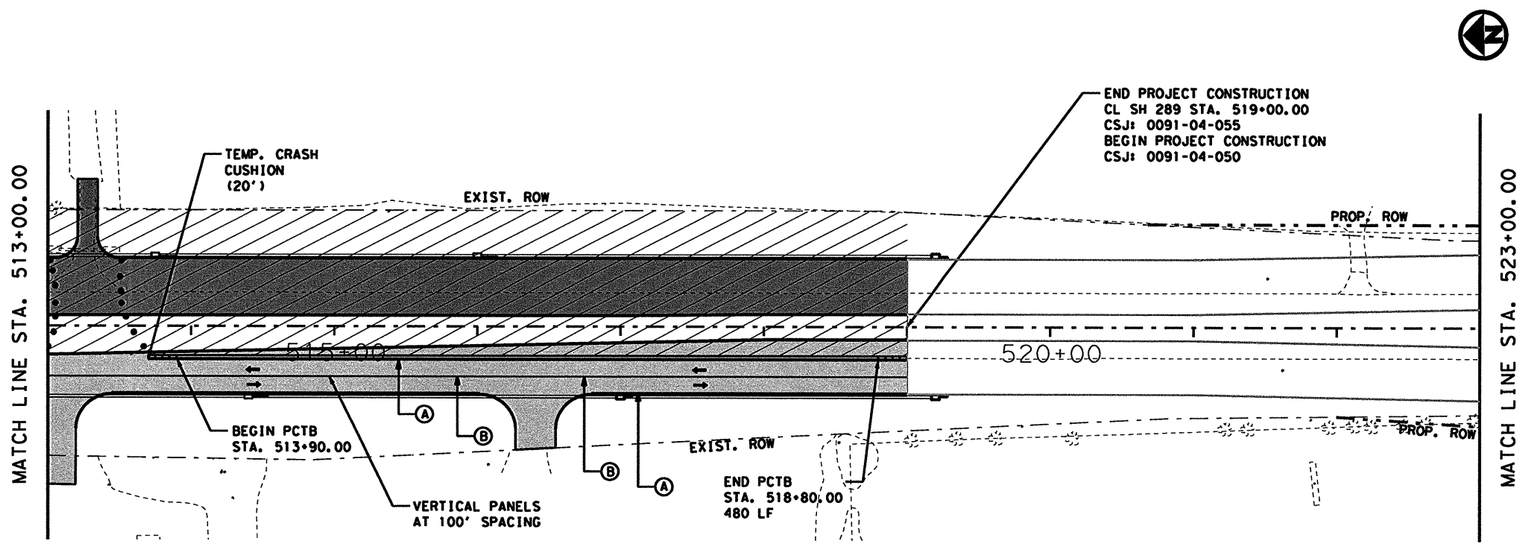

LEGEND

- CONSTRUCTION ZONE THIS PHASE
- PHASE CONSTRUCTION FOR MAJOR INTERSECTIONS
- PAVEMENT CONSTRUCTION THIS PHASE
- PAVEMENT CONSTRUCTION PREVIOUS PHASE
- TEMPORARY ASPHALT PAVEMENT
- PORTABLE CONCRETE TRAFFIC BARRIER (PCTB)
- TEMPORARY CRASH CUSHION
- CHANNELIZATION DEVICES
- TYPE III BARRICADE
- SIGN
- TEMPORARY TRAFFIC
- (A) WK ZN PAV MRK. REMOV (W) 4" (SLD)
- (B) WK ZN PAV MRK. REMOV (Y) 4" (SLD W/MRKR)

NOTES:

1. SEE PROJECT LAYOUT SHEETS FOR ADVANCE WARNING AND SIGN PLACEMENT.

2. THE CONTRACTOR IS REQUIRED TO PROVIDE ACCESS TO PRIVATE PROPERTY AND INTERSECTING ROADWAYS AT ALL TIMES.

4. THE CONTRACTOR IS REQUIRED TO MAINTAIN POSITIVE DRAINAGE DURING CONSTRUCTION.

5. SEE MISCELLANEOUS TCP DETAILS FOR TYPICAL DRIVEWAYS AND UNSIGNALIZED INTERSECTIONS.

STATE OF TEXAS
NICHOLAS VON SPENCER
93702
LICENSED
PROFESSIONAL ENGINEER

Nicholas Von Spencer, P.E. 4-8-11
Signature of Registrant & Date

Texas Department of Transportation
© 2011

SH 289 TRAFFIC CONTROL PLAN PHASE II

SCALE: 1"=100' SHEET 12 OF 12

DESIGN	FED. RD. DIV. NO.	STATE PROJECT NO.		HIGHWAY NO.
AMW	6	(SEE TITLE SHEET)		SH 289
GRAPHICS AMW	STATE	DISTRICT	COUNTY	SHEET NO.
CHECK NVS	TEXAS	DALLAS	COLLIN	93
CHECK NVS	CONTROL	SECTION	JOB	
	0091	04	055	

4/7/2011 3:48:45 PM

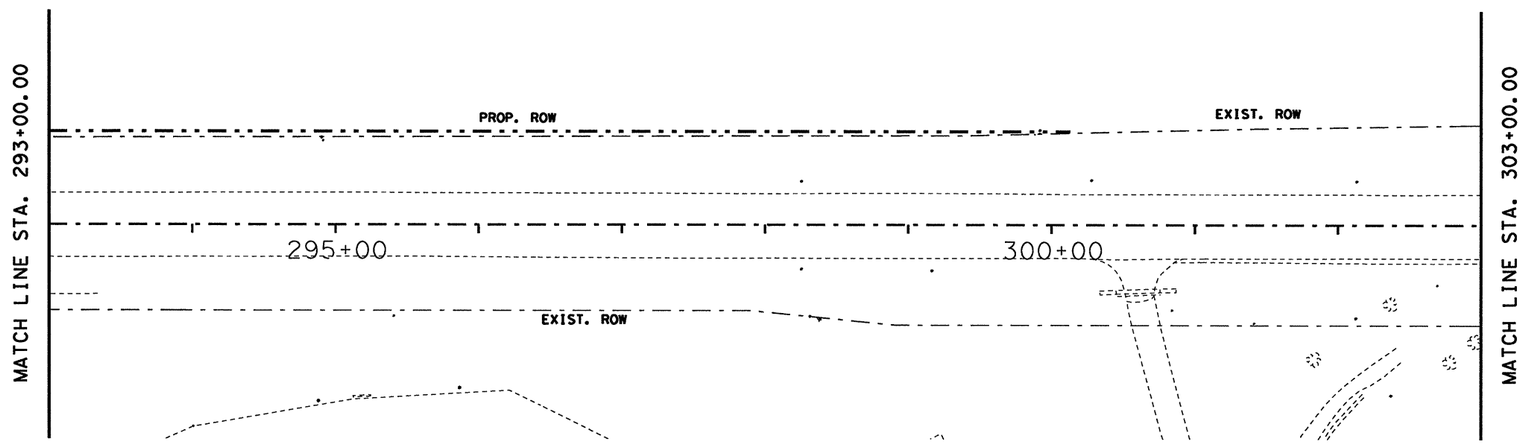

LEGEND

- CONSTRUCTION ZONE THIS PHASE
- PHASE CONSTRUCTION FOR MAJOR INTERSECTIONS
- PAVEMENT CONSTRUCTION THIS PHASE
- PAVEMENT CONSTRUCTION PREVIOUS PHASE
- TEMPORARY ASPHALT PAVEMENT
- PORTABLE CONCRETE TRAFFIC BARRIER (PCTB)
- TEMPORARY CRASH CUSHION
- CHANNELIZATION DEVICES
- TYPE III BARRICADE
- SIGN
- TEMPORARY TRAFFIC
- (A) WK ZN PAV MRK. REMOV (W) 4" (SLD)
- (B) WK ZN PAV MRK. REMOV (Y) 4" (SLD W/MRKR)

NOTES:

1. SEE PROJECT LAYOUT SHEETS FOR ADVANCE WARNING AND SIGN PLACEMENT.

2. THE CONTRACTOR IS REQUIRED TO PROVIDE ACCESS TO PRIVATE PROPERTY AND INTERSECTING ROADWAYS AT ALL TIMES.

4. THE CONTRACTOR IS REQUIRED TO MAINTAIN POSITIVE DRAINAGE DURING CONSTRUCTION.

5. SEE MISCELLANEOUS TCP DETAILS FOR TYPICAL DRIVEWAYS AND UNSIGNALIZED INTERSECTIONS.

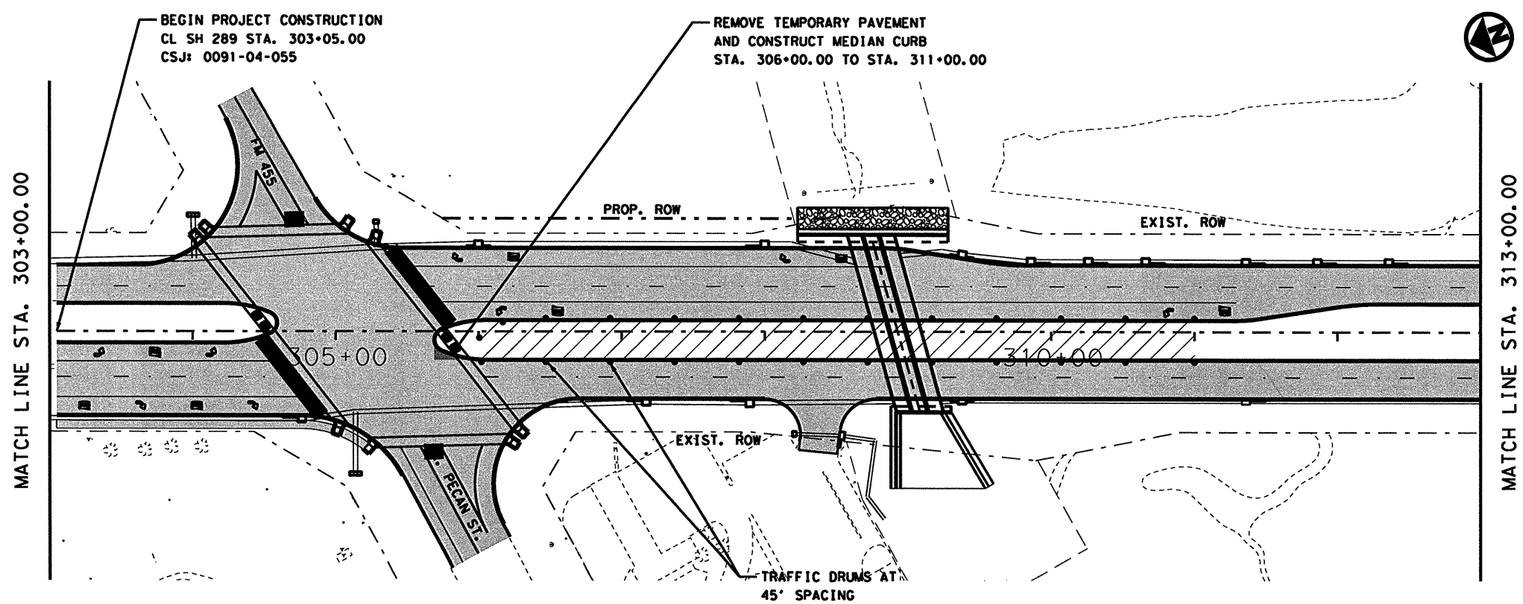

STATE OF TEXAS
NICHOLAS VON SPENCER
93702
LICENSED PROFESSIONAL ENGINEER

Nicholas V Spencer, P.E. 4-8-11
Signature of Registrant & Date

Texas Department of Transportation
© 2011

SH 289 TRAFFIC CONTROL PLAN PHASE III

SCALE: 1"=100' SHEET 1 OF 4

DESIGN	FED. RD. DIV. NO.	STATE PROJECT NO.		HIGHWAY NO.
AMW	6	(SEE TITLE SHEET)		SH 289
GRAPHICS AMW	STATE	DISTRICT	COUNTY	SHEET NO.
CHECK NVS	TEXAS	DALLAS	COLLIN	94
CHECK NVS	CONTROL	SECTION	JOB	
	0091	04	055	

T:\DALDGN*A\SH 289 Celina\THE PLANS\Traffic Control\Phase III\tcp*phaseIII*1.dgn

R-201104-01

4/7/2011 3:49:00 PM

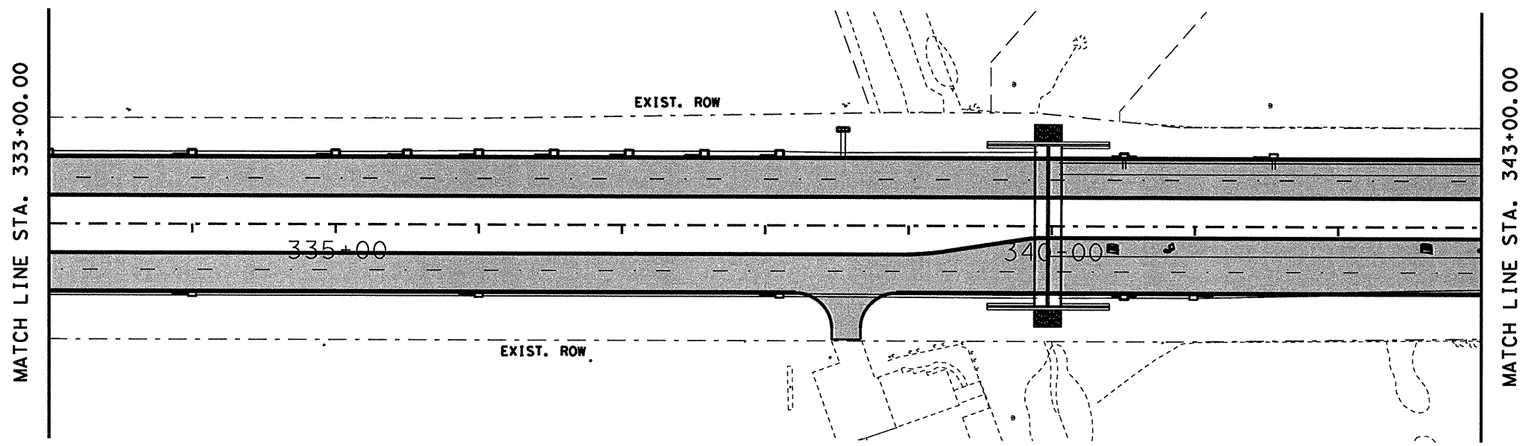

LEGEND

- CONSTRUCTION ZONE THIS PHASE
- PHASE CONSTRUCTION FOR MAJOR INTERSECTIONS
- PAVEMENT CONSTRUCTION THIS PHASE
- PAVEMENT CONSTRUCTION PREVIOUS PHASE
- TEMPORARY ASPHALT PAVEMENT
- PORTABLE CONCRETE TRAFFIC BARRIER (PCTB)
- TEMPORARY CRASH CUSHION
- CHANNELIZATION DEVICES
- TYPE III BARRICADE
- SIGN
- TEMPORARY TRAFFIC
- (A) WK ZN PAV MRK. REMOV (W) 4" (SLD)
- (B) WK ZN PAV MRK. REMOV (Y) 4" (SLD W/MRKR)

NOTES:

1. SEE PROJECT LAYOUT SHEETS FOR ADVANCE WARNING AND SIGN PLACEMENT.

2. THE CONTRACTOR IS REQUIRED TO PROVIDE ACCESS TO PRIVATE PROPERTY AND INTERSECTING ROADWAYS AT ALL TIMES.

4. THE CONTRACTOR IS REQUIRED TO MAINTAIN POSITIVE DRAINAGE DURING CONSTRUCTION.

5. SEE MISCELLANEOUS TCP DETAILS FOR TYPICAL DRIVEWAYS AND UNSIGNALIZED INTERSECTIONS.

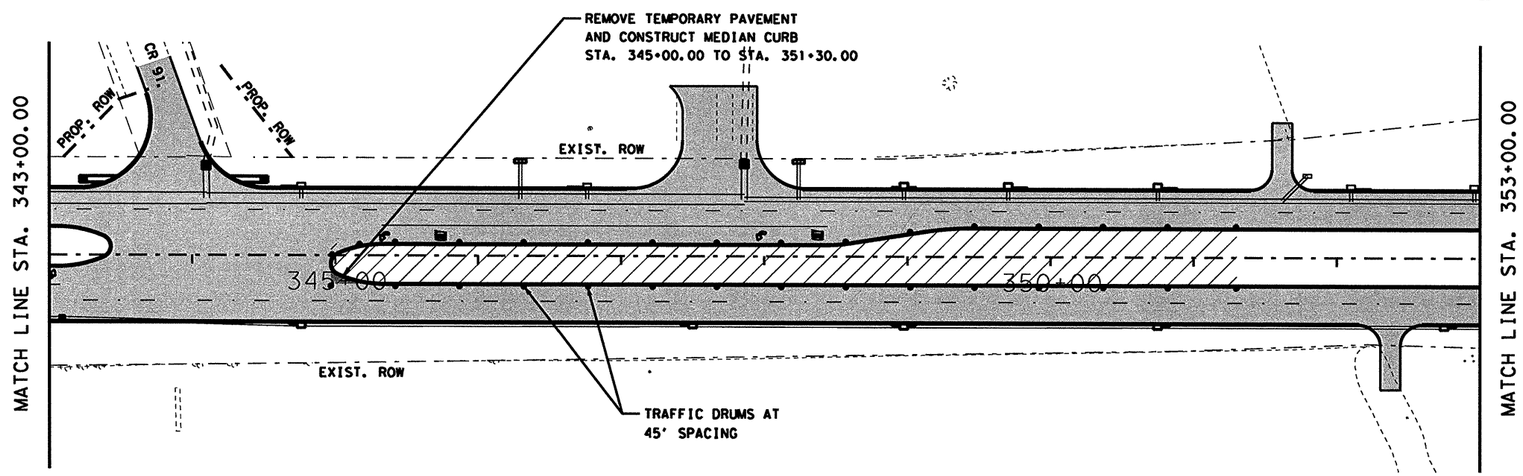

STATE OF TEXAS
NICHOLAS VON SPENCER
93702
LICENSED
PROFESSIONAL ENGINEER

Nicholas Von Spencer, P.E. 4-8-11
Signature of Registrant & Date

Texas Department of Transportation
© 2011

SH 289
TRAFFIC CONTROL PLAN
PHASE III

SCALE: 1"=100'

SHEET 2 OF 4

DESIGN	FED. RD. DIV. NO.	STATE PROJECT NO.		HIGHWAY NO.
AMW	6	(SEE TITLE SHEET)		SH 289
GRAPHICS AMW	STATE	DISTRICT	COUNTY	SHEET NO.
CHECK NVS	TEXAS	DALLAS	COLLIN	95
CHECK NVS	CONTROL	SECTION	JOB	
	0091	04	055	

T:\DALDGN*A\SH 289 Celina\THE PLANS\Traffic Control\Phase III\tcp*phaseIII*3.dgn

R-201104-01

4/7/2011 3:49:14 PM

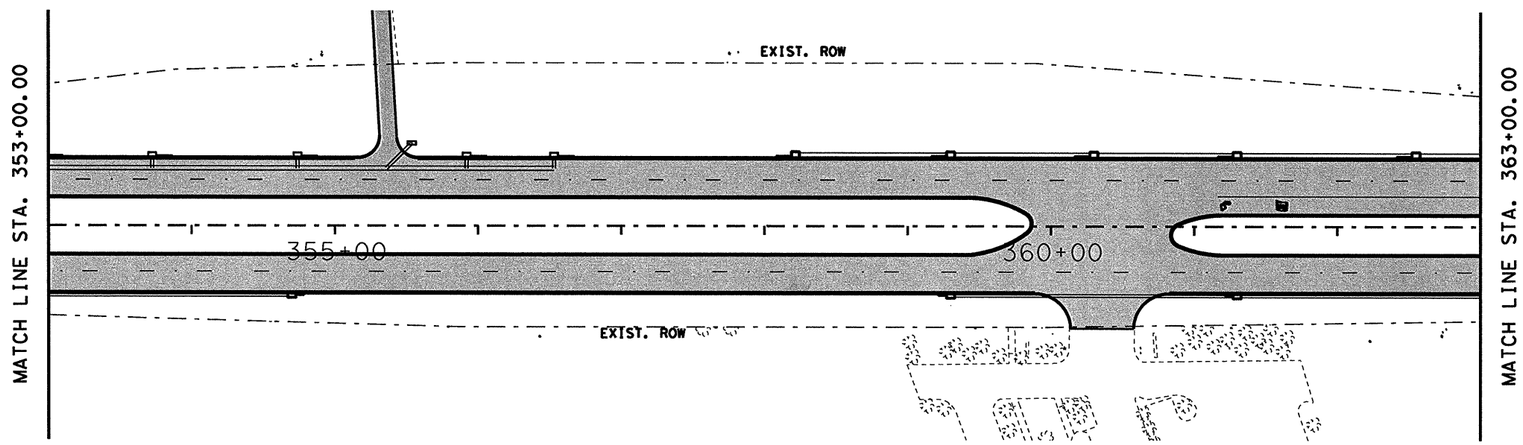

LEGEND

- CONSTRUCTION ZONE THIS PHASE
- PHASE CONSTRUCTION FOR MAJOR INTERSECTIONS
- PAVEMENT CONSTRUCTION THIS PHASE
- PAVEMENT CONSTRUCTION PREVIOUS PHASE
- TEMPORARY ASPHALT PAVEMENT
- PORTABLE CONCRETE TRAFFIC BARRIER (PCTB)
- TEMPORARY CRASH CUSHION
- CHANNELIZATION DEVICES
- TYPE III BARRICADE
- SIGN
- TEMPORARY TRAFFIC
- (A) WK ZN PAV MRK. REMOV (W) 4" (SLD)
- (B) WK ZN PAV MRK. REMOV (Y) 4" (SLD W/MRKR)

NOTES:

1. SEE PROJECT LAYOUT SHEETS FOR ADVANCE WARNING AND SIGN PLACEMENT.

2. THE CONTRACTOR IS REQUIRED TO PROVIDE ACCESS TO PRIVATE PROPERTY AND INTERSECTING ROADWAYS AT ALL TIMES.

4. THE CONTRACTOR IS REQUIRED TO MAINTAIN POSITIVE DRAINAGE DURING CONSTRUCTION.

5. SEE MISCELLANEOUS TCP DETAILS FOR TYPICAL DRIVEWAYS AND UNSIGNALIZED INTERSECTIONS.

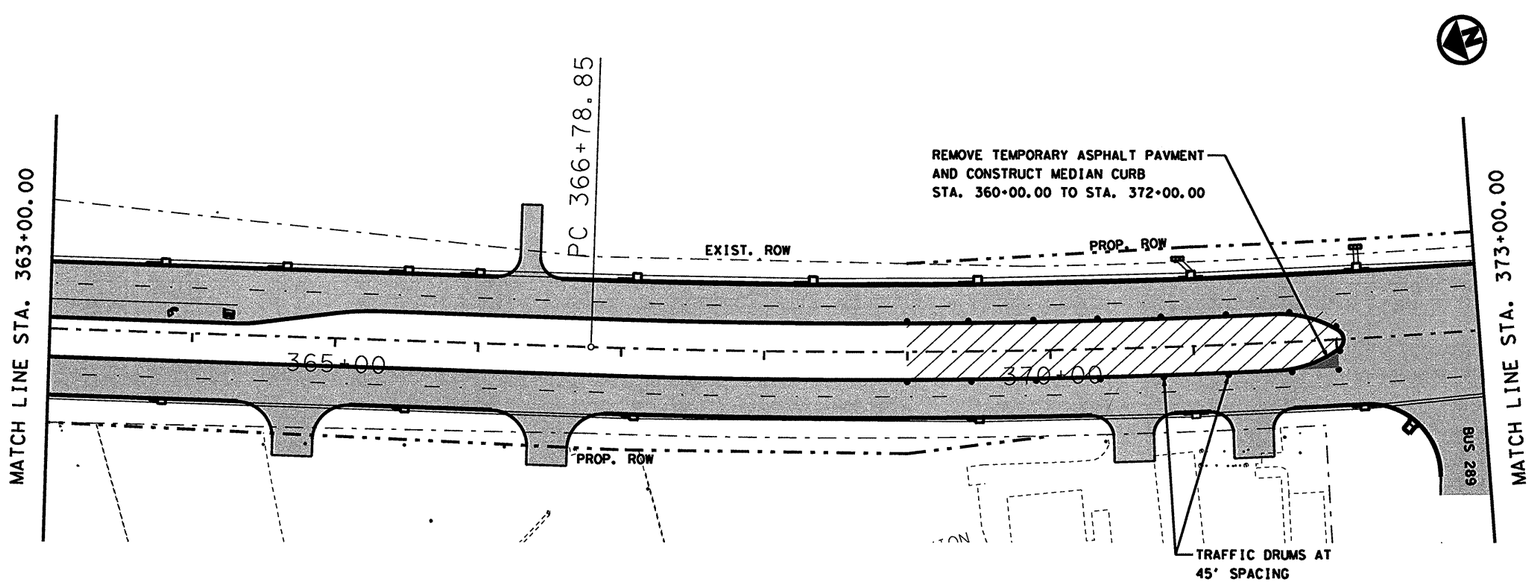

STATE OF TEXAS
NICHOLAS VON SPENCER
93702
LICENSED
PROFESSIONAL ENGINEER

Signature of Registrant & Date, P.E. 4-8-11

Texas Department of Transportation
© 2011

SH 289 TRAFFIC CONTROL PLAN PHASE III

SCALE: 1"=100' SHEET 3 OF 4

DESIGN	FED. RD. DIV. NO.	STATE PROJECT NO.		HIGHWAY NO.
AMW	6	(SEE TITLE SHEET)		SH 289
GRAPHICS AMW	STATE	DISTRICT	COUNTY	SHEET NO.
CHECK NVS	TEXAS	DALLAS	COLLIN	96
CHECK NVS	CONTROL	SECTION	JOB	
	0091	04	055	

T:\DALDGN*A\SH 289 Celina\THE PLANS\Traffic Control\Phase III\tcp*phaseIII*4.dgn

R-201104-01

4/7/2011 3:49:27 PM
T:\DALDGN#A\SH 289 Celina\THE PLANS\Traffic Control\Phase III\top*phaseIII*5.dgn

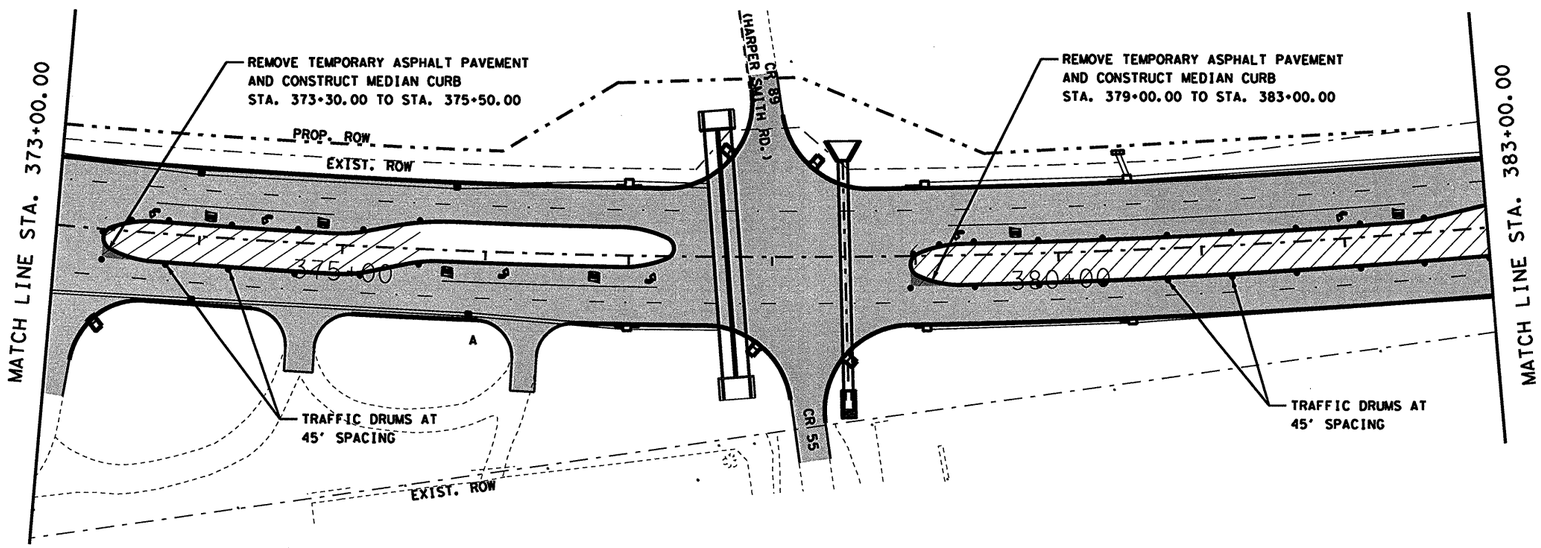

LEGEND

- CONSTRUCTION ZONE THIS PHASE
- PHASE CONSTRUCTION FOR MAJOR INTERSECTIONS
- PAVEMENT CONSTRUCTION THIS PHASE
- PAVEMENT CONSTRUCTION PREVIOUS PHASE
- TEMPORARY ASPHALT PAVEMENT
- PORTABLE CONCRETE TRAFFIC BARRIER (PCTB)
- TEMPORARY CRASH CUSHION
- CHANNELIZATION DEVICES
- TYPE III BARRICADE
- SIGN
- TEMPORARY TRAFFIC
- (A) WK ZN PAV MRK. REMOV (W) 4" (SLD)
- (B) WK ZN PAV MRK. REMOV (Y) 4" (SLD W/MRKR)

NOTES:

1. SEE PROJECT LAYOUT SHEETS FOR ADVANCE WARNING AND SIGN PLACEMENT.

2. THE CONTRACTOR IS REQUIRED TO PROVIDE ACCESS TO PRIVATE PROPERTY AND INTERSECTING ROADWAYS AT ALL TIMES.

4. THE CONTRACTOR IS REQUIRED TO MAINTAIN POSITIVE DRAINAGE DURING CONSTRUCTION.

5. SEE MISCELLANEOUS TCP DETAILS FOR TYPICAL DRIVEWAYS AND UNSIGNALIZED INTERSECTIONS.

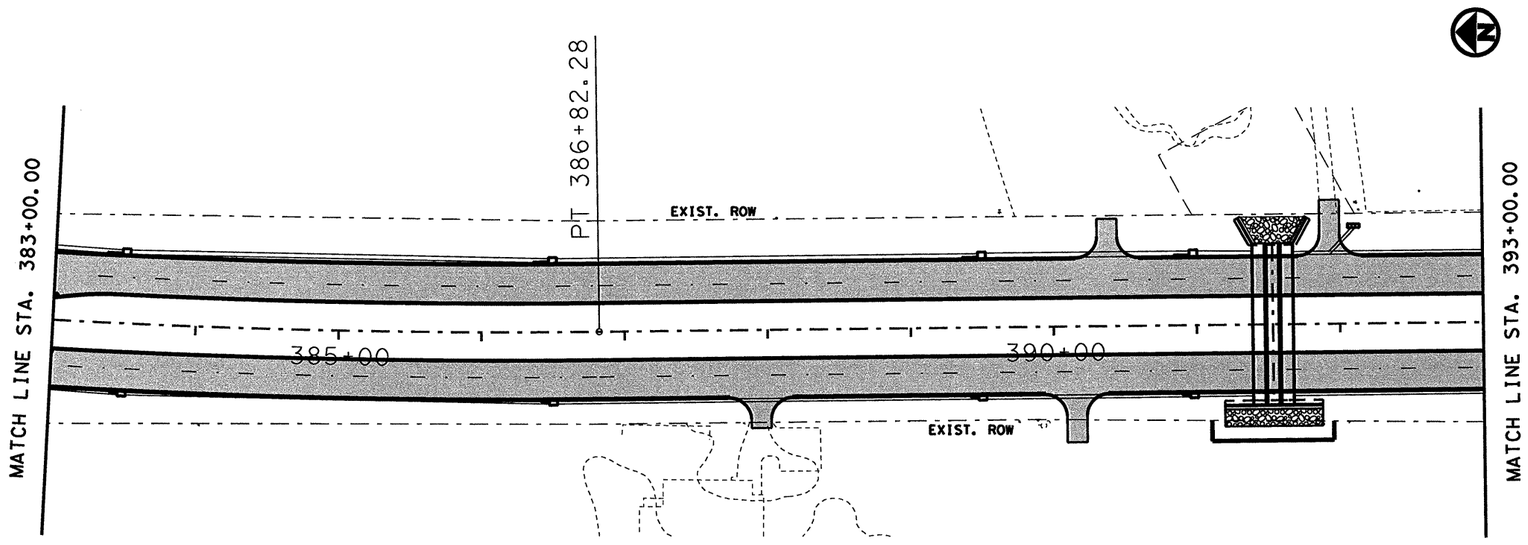

STATE OF TEXAS
NICHOLAS VON SPENCER
93702
LICENSED
PROFESSIONAL ENGINEER

Nicholas V Spencer, P.E. 4-8-11
Signature of Registrant & Date

Texas Department of Transportation
© 2011

SH 289 TRAFFIC CONTROL PLAN PHASE III

SCALE: 1"=100'

SHEET 4 OF 4

DESIGN	FED. RD. DIV. NO.	STATE PROJECT NO.		HIGHWAY NO.
AMW	6	(SEE TITLE SHEET)		SH 289
GRAPHICS	STATE	DISTRICT	COUNTY	SHEET NO.
AMW	TEXAS	DALLAS	COLLIN	97
CHECK	CONTROL	SECTION	JOB	
NVS	0091	04	055	
CHECK NVS				

T:\DALDGN#A\SH 289 Celina\THE PLANS\Traffic Control\Intersections\Intersection TCP detail.dgn 5/23/2011 10:22:35 AM

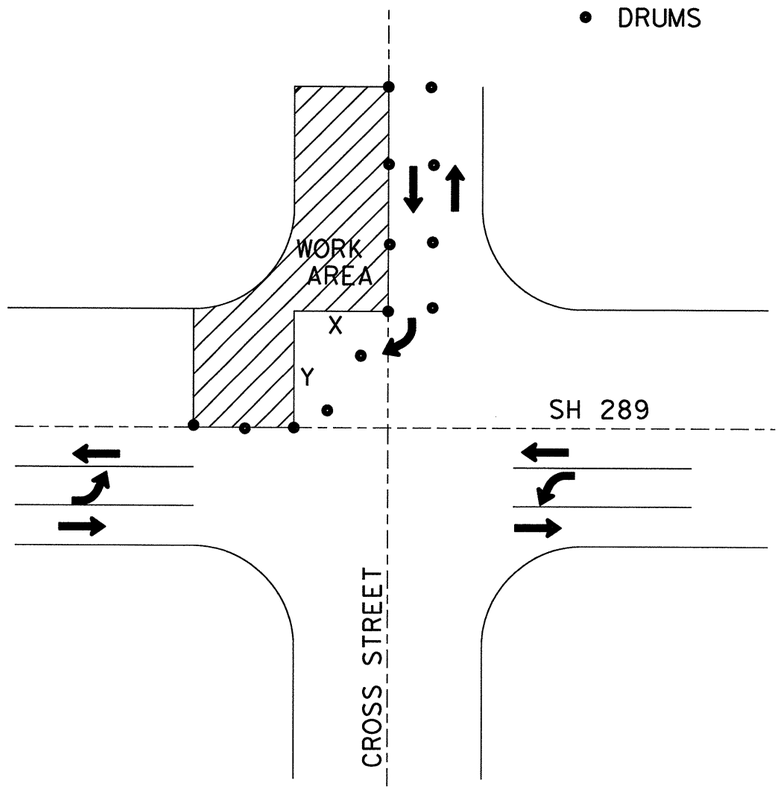

PHASED CONSTRUCTION STEP A

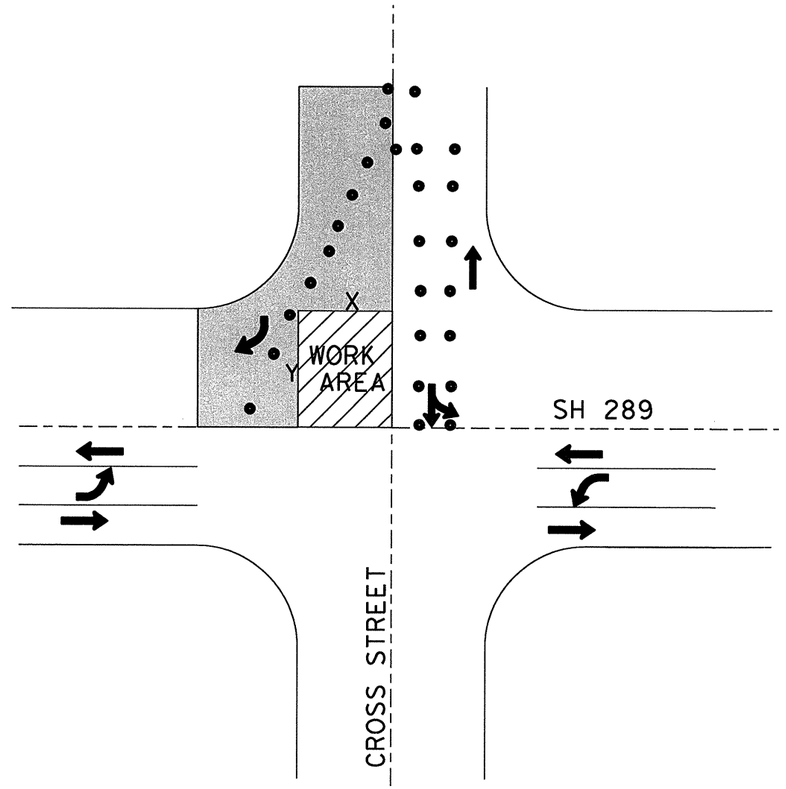

PHASED CONSTRUCTION STEP B

NOTES:

1. EACH QUADRANT OF THE INTERSECTIONS LISTED SHALL BE CONSTRUCTED IN TWO PHASES AS SHOWN TO PROVIDE ADEQUATE ROOM FOR RIGHT TURN MOVEMENTS. WORK AREA VARIES.

2. REMOVE EXISTING PAVEMENT AND BASE MATERIAL IN AREA SHOWN. PREPARE BASE AND REPLACE POLYETHYLENE SHEET IN ACCORDANCE WITH ITEM 361

3. VARIOUS INTERSECTIONS AND DRIVEWAYS ARE DESIGNATED AS A RENTAL CHARGE LOCATION. SEE SPECIAL PROVISION ITEM 008 " PROSECUTION AND PROGRESS" (008-125). ALSO SEE GENERAL NOTES FOR LOCATION, IMPACT DAYS, AND RENTAL CHARGES.

4. INTERSECTIONS MAY REMAIN CLOSED TEMPORARILY TO THRU TRAFFIC IN ONE DIRECTION DURING STEP A CONSTRUCTION PHASE FOR THE LAYING OF TRUNK SYSTEM IN A EXPEDITOUS AND ECONOMICAL MANNER. CONTRACTOR SHALL USE FAST TRACK HIGH EARLY STRENGTH (HES) CONCRETE.

5. AT THE END OF EACH WORK DAY, THE CONTRACTOR SHALL RESTORE NORMAL OPERATION AT INTERSECTIONS. ENSURE THAT CROSS STREETS ARE WIDE ENOUGH TO PERMIT TWO LANES OF TRAFFIC AT ALL TIMES.

6. INTERSECTION WORK INCLUDES TEMPORARY SIGNALS ITEM 681 2001.

CROSS STREET	PHASE	STAGE	MAIN LANE CONSTRUCTION	X	Y	ITEM 530-2056 INTERSECTIONS (CONC) (HES) SY
FM 455./PECAN ST.	I	I-A	SB	41	41	787
FM 455./PECAN ST.	I	I-B	SB	30	36	1267
FM 455./PECAN ST.	II	II-A	NB	28	26	1002
FM 455./PECAN ST.	II	II-B	NB	NA	NA	504
CR 53 / CR 88	I	I-A	SB	38	33	481
CR 53 / CR 88	I	I-B	SB	39	38	308
CR 53 / CR 88	I	I-C	SB	13	87	127
CR 53 / CR 88	II	II-A	NB	30	33	685
	II	II-B	NB	30	34	732
					TOTAL	5893

X= DISTANCE PARALLEL TO SH 289
Y= DISTANCE PERPENDICULAR TO SH 289
NOTE: DISTANCES ALLOW FOR A WB-50 TO MAKE TURNS

STATE OF TEXAS
NICHOLAS VON SPENCER
93702
LICENSED PROFESSIONAL ENGINEER

Signature of Registrant, P.E. & Date 5-25-11

Texas Department of Transportation
© 2011

TRAFFIC CONTROL DETAIL INTERSECTIONS AT MAJOR CROSS STREETS

SCALE: N.T.S.

DESIGN	FED. RD. DIV. NO.	STATE PROJECT NO.		HIGHWAY NO.
NVS	6	(SEE TITLE SHEET)		SH 289
GRAPHICS NVS	STATE	DISTRICT	COUNTY	SHEET NO.
CHECK	TEXAS	DALLAS	COLLIN	98
CHECK	CONTROL	SECTION	JOB	
	0091	04	055	

R-201104-01

T:\DALDGN*A\SH 289 Celina\THE PLANS\Traffic Control\Intersections\CR 88 CR 53 top phase I.dgn 4/8/2011 7:05:03 AM

PHASED CONSTRUCTION STEP A
DURING PHASE I- SB
SH 289 CONSTRUCTION

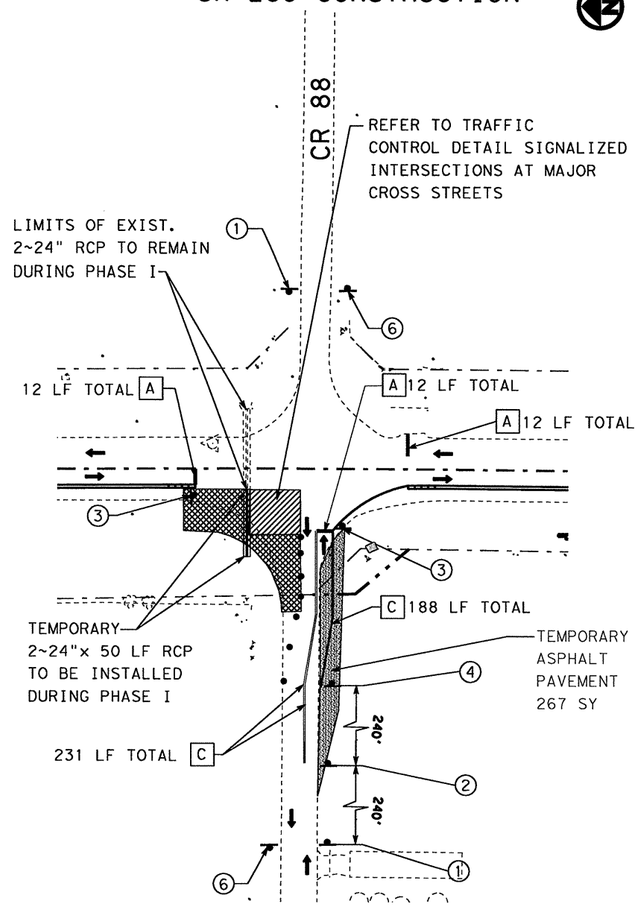

PHASE I DRAINAGE NOTES:

THE CONTRACTOR SHALL MAINTAIN EXISTING DRAINAGE UNTIL THE COMPLETION OF THE PROPOSED STORM SEWER INLETS.

1. REMOVE PORTION OF EXISTING 2~24" RCP AS SHOWN AND EXTEND WITH TEMPORARY 2~24" RCP PIPE AT THE START OF PHASE I SO THAT EXISTING DRAINAGE IS NOT DISRUPTED.

PHASED CONSTRUCTION STEP B
DURING PHASE I- SB
SH 289 CONSTRUCTION

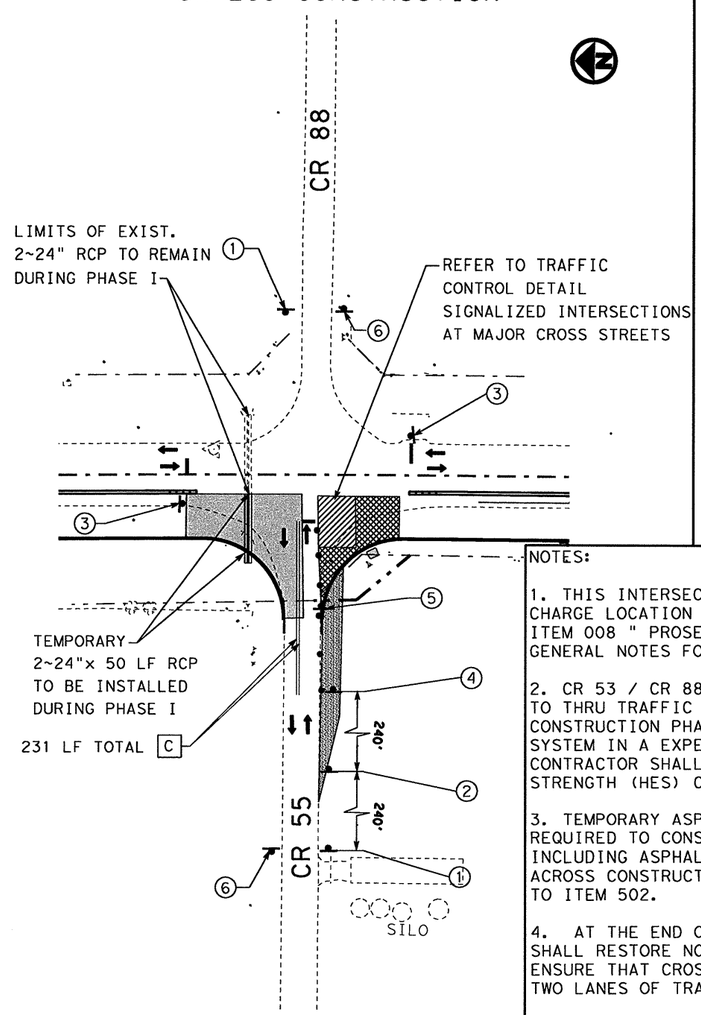

PHASED CONSTRUCTION STEP C
DURING PHASE I- SB
SH 289 CONSTRUCTION

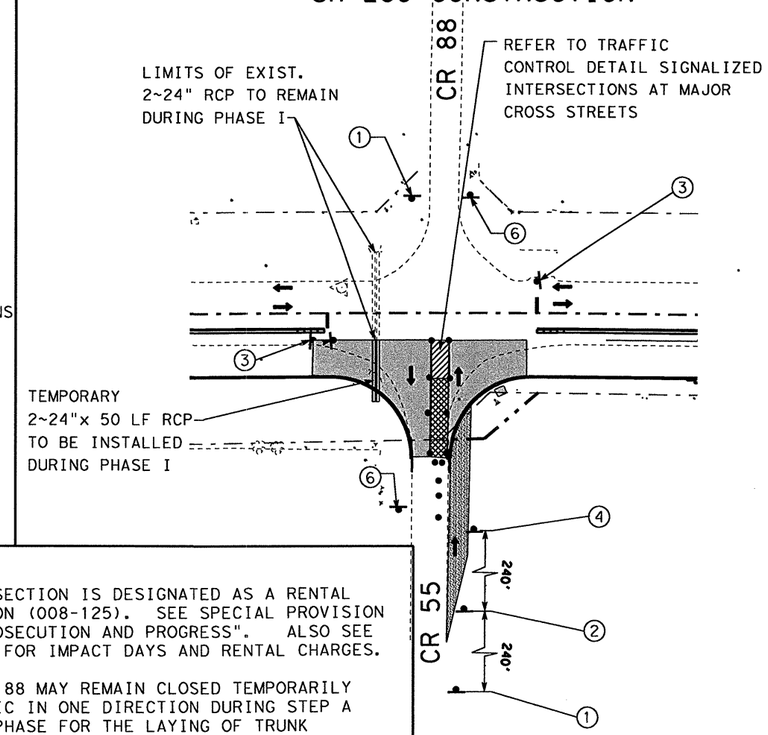

NOTES:

1. THIS INTERSECTION IS DESIGNATED AS A RENTAL CHARGE LOCATION (008-125). SEE SPECIAL PROVISION ITEM 008 " PROSECUTION AND PROGRESS". ALSO SEE GENERAL NOTES FOR IMPACT DAYS AND RENTAL CHARGES.

2. CR 53 / CR 88 MAY REMAIN CLOSED TEMPORARILY TO THRU TRAFFIC IN ONE DIRECTION DURING STEP A CONSTRUCTION PHASE FOR THE LAYING OF TRUNK SYSTEM IN A EXPEDITOUS AND ECONOMICAL MANNER. CONTRACTOR SHALL USE FAST TRACK HIGH EARLY STRENGTH (HES) CONCRETE.

3. TEMPORARY ASPHALT PAVEMENT QUANTITY REQUIRED TO CONSTRUCT SMOOTH RIDING SURFACE INCLUDING ASPHALT RAMP FOR TRAFFIC MOVEMENT ACROSS CONSTRUCTION AREA SHALL BE SUBSIDIARY TO ITEM 502.

4. AT THE END OF EACH WORK DAY, THE CONTRACTOR SHALL RESTORE NORMAL OPERATION AT INTERSECTIONS. ENSURE THAT CROSS STREETS ARE WIDE ENOUGH TO PERMIT TWO LANES OF TRAFFIC AT ALL TIMES.

5. INTERSECTION WORK INCLUDES TEMPORARY SIGNALS ITEM 681 2001.

STATE OF TEXAS
NICHOLAS VON SPENCER
93702
LICENSED PROFESSIONAL ENGINEER

Nicholas V Spencer, P.E. 4-8-11
Signature of Registrant & Date

Texas Department of Transportation
© 2011

LEGEND

- TEMPORARY ASPHALT PAVEMENT
- INTERSECTION CONSTRUCTION AREA
- CONSTRUCTION ZONE THIS PHASE
- PAVEMENT CONSTRUCTION THIS PHASE
- PAVEMENT CONSTRUCTION PREVIOUS STEP
- PORTABLE CONCRETE TRAFFIC BARRIER (PCTB)
- LOW PROFILE CONCRETE BARRIER (LPCB)
- CHANNELIZATION DEVICES
- TYPE III BARRICADE
- SIGN
- TEMPORARY TRAFFIC

A WK ZN PAV. REMOV (W) (24")

B WK ZN PAV. REMOV (W) (4")

C 2-WK ZN PAV. REMOV (Y) (4")

D WK ZN PAV. REMOV (Y) (12")

1 ROAD WORK AHEAD — CW20-1D 48" X 48"

2 DETOUR AHEAD — CW20-2D 48"x 48"

3 STOP HERE ON RED — R10-6L 24"X30"

4 DETOUR — M4-10L

5 SHOULDER DROP-OFF — CW8-9A 48" x 48"

6 END ROAD WORK — G20-2a 48"X24"

CR 53 / CR 88 INTERSECTION TRAFFIC CONTROL PLAN PHASE I

SCALE: N. T. S. SHEET 1 OF 2

DESIGN	FED. RD. DIV. NO.	STATE PROJECT NO.		HIGHWAY NO.
NVS	6	(SEE TITLE SHEET)		SH 289
GRAPHICS NVS	STATE	DISTRICT	COUNTY	SHEET NO.
CHECK	TEXAS	DALLAS	COLLIN	99
CHECK	CONTROL	SECTION	JOB	
	0091	04	055	

R-201104-01

PHASED CONSTRUCTION STEP A
DURING PHASE II- NB
SH 289 CONSTRUCTION

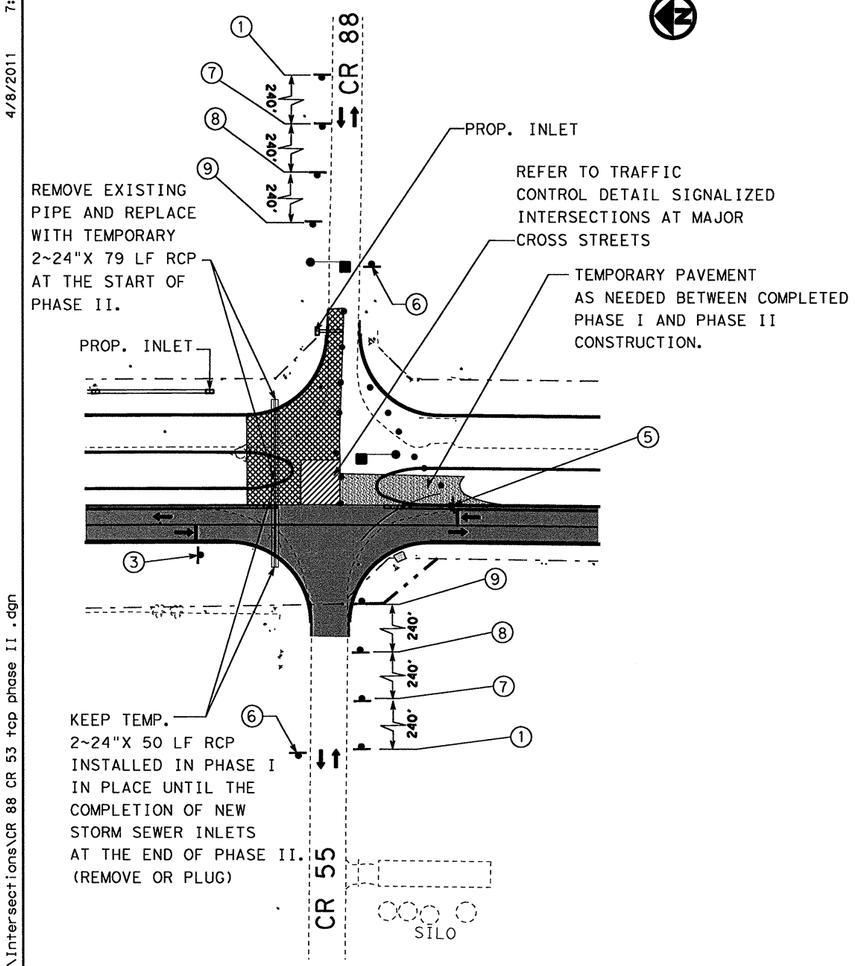

PHASED CONSTRUCTION STEP B
DURING PHASE II- NB
SH 289 CONSTRUCTION

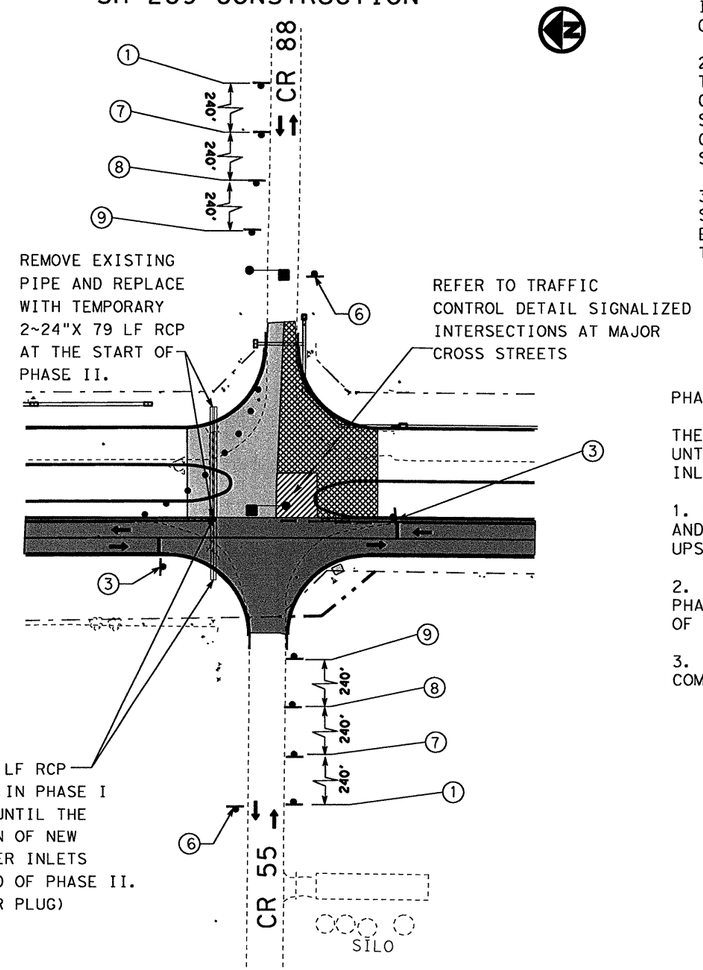

NOTES:

1. THIS INTERSECTION IS DESIGNATED AS A RENTAL CHARGE LOCATION (008-125). SEE SPECIAL PROVISION ITEM 008 " PROSECUTION AND PROGRESS". ALSO SEE GENERAL NOTES FOR IMPACT DAYS AND RENTAL CHARGES.

2. CR 53 / CR 88 MAY REMAIN CLOSED TEMPORARILY TO THRU TRAFFIC IN ONE DIRECTION DURING STEP A CONSTRUCTION PHASE FOR THE LAYING OF TRUNK SYSTEM IN A EXPEDITOUS AND ECONOMICAL MANNER. CONTRACTOR SHALL USE FAST TRACK HIGH EARLY STRENGTH (HES) CONCRETE.

3. AT THE END OF EACH WORK DAY, THE CONTRACTOR SHALL RESTORE NORMAL OPERATION AT INTERSECTIONS. ENSURE THAT CROSS STREETS ARE WIDE ENOUGH TO PERMIT TWO LANES OF TRAFFIC AT ALL TIMES.

PHASE II DRAINAGE NOTES:

THE CONTRACTOR SHALL MAINTAIN EXISTING DRAINAGE UNTIL THE COMPLETION OF THE PROPOSED STORM SEWER INLETS.

1. REMOVE REMAINING PORTION OF EXISTING 2~24" RCP AND EXTEND WITH TEMPORARY 2~24"X60 LF RCP PIPE UPSTREAM AS SHOWN AT THE START OF PHASE II.

2. KEEP TEMPORARY 2~24"X 50 LF RCP INSTALLED IN PHASE I DOWNSTREAM IN PLACE UNTIL THE COMPLETION OF NEW STORM SEWER INLETS AT THE END OF PHASE II.

3. REMOVE OR PLUG TEMPORARY PIPES AT THE COMPLETION OF NEW STORM SEWER INLETS.

LEGEND

- TEMPORARY ASPHALT PAVEMENT
- INTERSECTION CONSTRUCTION AREA
- CONSTRUCTION ZONE THIS PHASE
- PAVEMENT CONSTRUCTION THIS PHASE
- PAVEMENT CONSTRUCTION PREVIOUS PHASE
- PORTABLE CONCRETE TRAFFIC BARRIER (PCTB)
- LOW PROFILE CONCRETE BARRIER (LPCB)
- CHANNELIZATION DEVICES
- TYPE III BARRICADE
- SIGN
- TEMPORARY TRAFFIC
- FLAGGER

A WK ZN PAV. REMOV (W) (24")

B WK ZN PAV. REMOV (W) (4")

C 2-WK ZN PAV. REMOV (Y) (4")

D WK ZN PAV. REMOV (Y) (12")

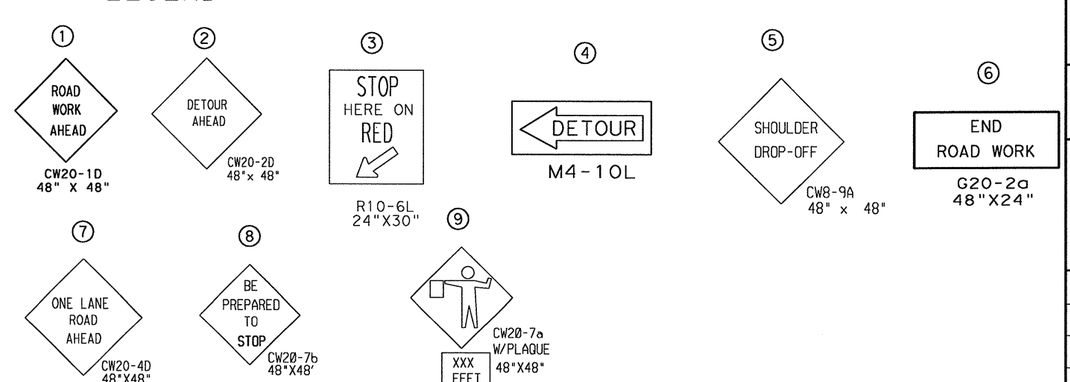

STATE OF TEXAS
NICHOLAS VON SPENCER
93702
LICENSED PROFESSIONAL ENGINEER

Nicholas V Spencer, P.E. 4-8-11
Signature of Registrant & Date

Texas Department of Transportation
© 2011

CR 53 / CR 88 INTERSECTION TRAFFIC CONTROL PLAN PHASE II

SCALE: N.T.S. SHEET 2 OF 2

DESIGN	FED. RD. DIV. NO.	STATE PROJECT NO.		HIGHWAY NO.
NVS	6	(SEE TITLE SHEET)		SH 289
GRAPHICS NVS	STATE	DISTRICT	COUNTY	SHEET NO.
CHECK NVS	TEXAS	DALLAS	COLLIN	100
CHECK	CONTROL	SECTION	JOB	
	0091	04	055	

T:\DALDGN*A\SH 289 Celina\THE PLANS\Traffic Control\Intersections\CR 88 CR 53 top phase II .dgn 4/8/2011 7:05:15 AM

R-201104-01

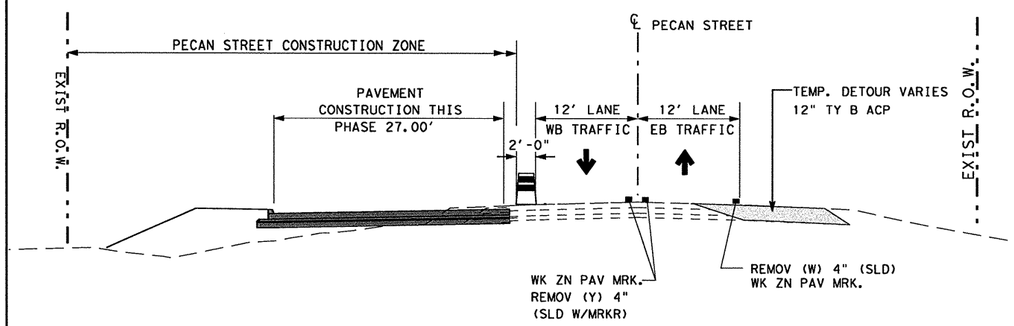

PECAN STREET
PHASE I STEP A TYPICAL SECTION INTERSECTION TCP

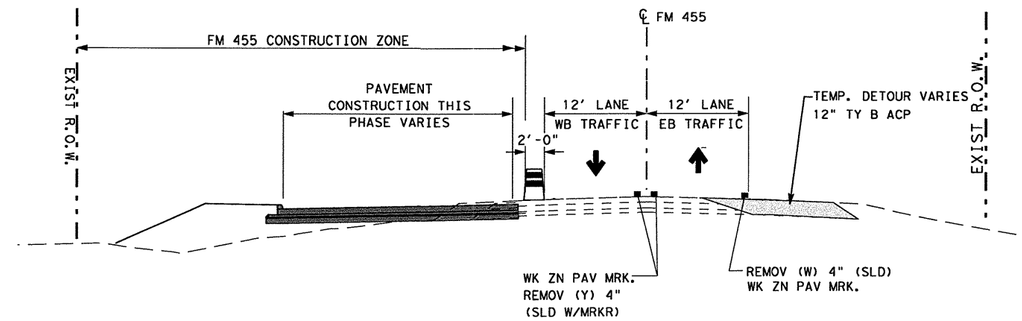

FM 455
PHASE II STEP A TYPICAL SECTION INTERSECTION TCP

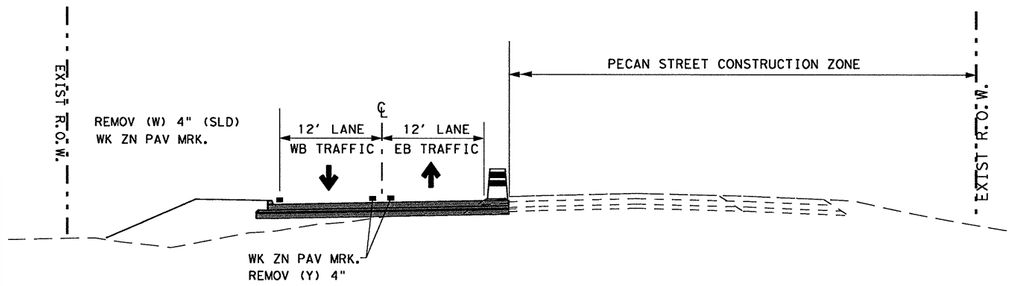

PECAN STREET
PHASE I STEP B TYPICAL SECTION INTERSECTION TCP

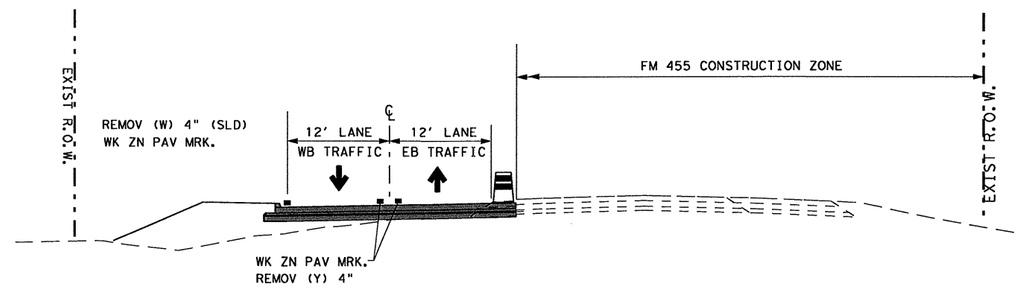

FM 455
PHASE II STEP B TYPICAL SECTION INTERSECTION TCP

STATE OF TEXAS
NICHOLAS VON SPENCER
93702
LICENSED
PROFESSIONAL ENGINEER

Nicholas Von Spencer, P.E. 4-8-11
Signature of Registrant & Date

Texas Department of Transportation
© 2011

FM 455/ PECAN ST. TRAFFIC CONTROL PLAN TYPICAL SECTIONS

SCALE: NTS — SHEET 1 OF 1

DESIGN	FED. RD. DIV. NO.	STATE PROJECT NO.		HIGHWAY NO.
AMW	6	(SEE TITLE SHEET)		SH 289
GRAPHICS AMW	STATE	DISTRICT	COUNTY	SHEET NO.
CHECK NVS	TEXAS	DALLAS	COLLIN	101
CHECK	CONTROL	SECTION	JOB	
NVS	0091	04	055	

7:05:43 AM
4/8/2011

T:\DALDCN\A\SH 289 Collin\THS PLANS\Traffic Control\Intersections\FM 455 Pecan St. TYP SEC.dgn

R-201104-01

T:\DALDGN*A\SH 289 Celina\THE PLANS\Traffic Control\Intersections\FM 455 Pecan St. tcp*phase I.dgn 5/15/2011 8:07:02 AM

PHASED CONSTRUCTION STEP A
DURING PHASE 1- SB
SH 289 CONSTRUCTION

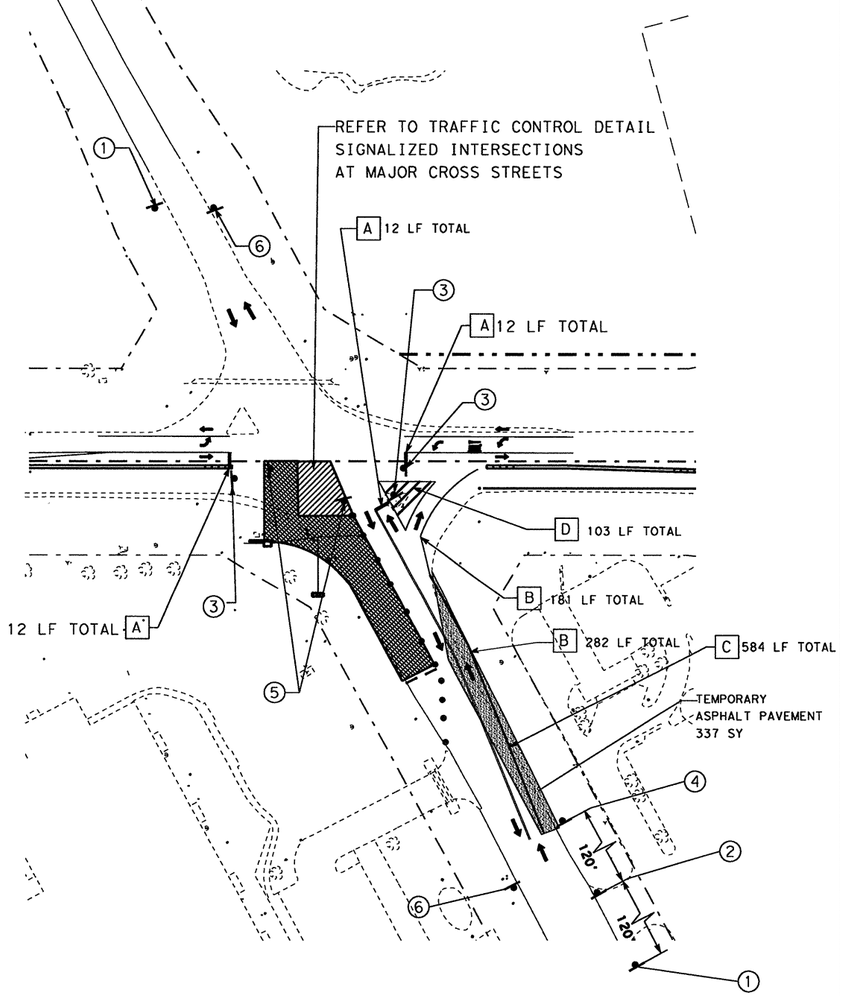

PHASED CONSTRUCTION STEP B
DURING PHASE 1- SB
SH 289 CONSTRUCTION

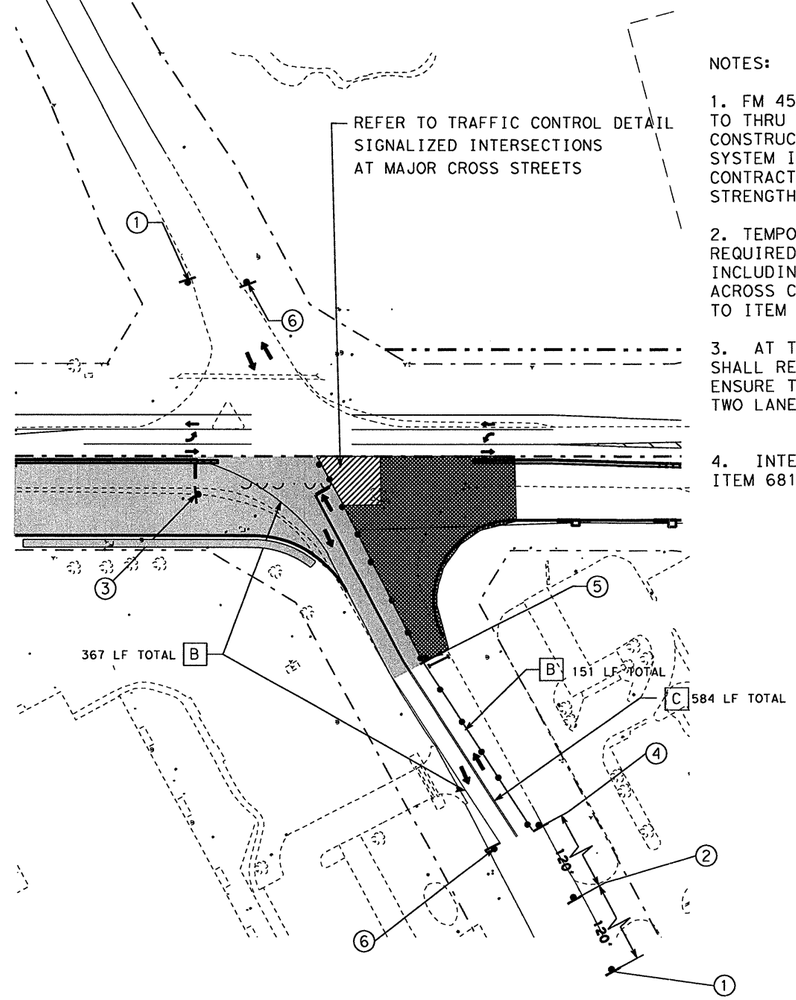

NOTES:

1. FM 455/ PECAN ST. MAY REMAIN CLOSED TEMPORARILY TO THRU TRAFFIC IN ONE DIRECTION DURING STEP A CONSTRUCTION PHASE FOR THE LAYING OF TRUNK SYSTEM IN A EXPEDITOUS AND ECONOMICAL MANNER. CONTRACTOR SHALL USE FAST TRACK HIGH EARLY STRENGTH (HES) CONCRETE.

2. TEMPORARY ASPHALT PAVEMENT QUANTITY REQUIRED TO CONSTRUCT SMOOTH RIDING SURFACE INCLUDING ASPHALT RAMP FOR TRAFFIC MOVEMENT ACROSS CONSTRUCTION AREA SHALL BE SUBSIDIARY TO ITEM 502.

3. AT THE END OF EACH WORK DAY, THE CONTRACTOR SHALL RESTORE NORMAL OPERATION AT INTERSECTIONS. ENSURE THAT CROSS STREETS ARE WIDE ENOUGH TO PERMIT TWO LANES OF TRAFFIC AT ALL TIMES.

4. INTERSECTION WORK INCLUDES TEMPORARY SIGNALS ITEM 681 2001.

STATE OF TEXAS
NICHOLAS VON SPENCER
93702
LICENSED
PROFESSIONAL ENGINEER

Signature of Registrant & Date, P.E. 5-25-11

LEGEND

- TEMPORARY ASPHALT PAVEMENT
- INTERSECTION CONSTRUCTION AREA
- CONSTRUCTION ZONE THIS PHASE
- PAVEMENT CONSTRUCTION THIS PHASE
- PAVEMENT CONSTRUCTION PREVIOUS STEP
- PORTABLE CONCRETE TRAFFIC BARRIER (PCTB)
- LOW PROFILE CONCRETE BARRIER (LPCB)
- DRUMS
- TYPE III BARRICADE
- SIGN
- TEMPORARY TRAFFIC

A WK ZN PAV. REMOV (W) (24")

B WK ZN PAV. REMOV (W) (4")

C 2-WK ZN PAV. REMOV (Y) (4")

D WK ZN PAV. REMOV (W) (12")

1 ROAD WORK AHEAD — CW20-1D 48" X 48"

2 DETOUR AHEAD — CW20-2D 48"x 48"

3 STOP HERE ON RED — R10-6L 24"X30"

4 DETOUR — M4-10L

5 SHOULDER DROP-OFF — CW8-9A 48" x 48"

6 END ROAD WORK — G20-2a 48"X24"

Texas Department of Transportation © 2011

FM 455/PECAN ST. INTERSECTION TRAFFIC CONTROL PLAN PHASE I

SCALE: N. T. S. SHEET 1 OF 2

DESIGN NVS	FED. RD. DIV. NO.	STATE PROJECT NO.		HIGHWAY NO.
GRAPHICS NVS	6	(SEE TITLE SHEET)		SH 289
CHECK	STATE	DISTRICT	COUNTY	SHEET NO.
	TEXAS	DALLAS	COLLIN	102
CHECK	CONTROL	SECTION	JOB	
	0091	04	055	

R-201104-01

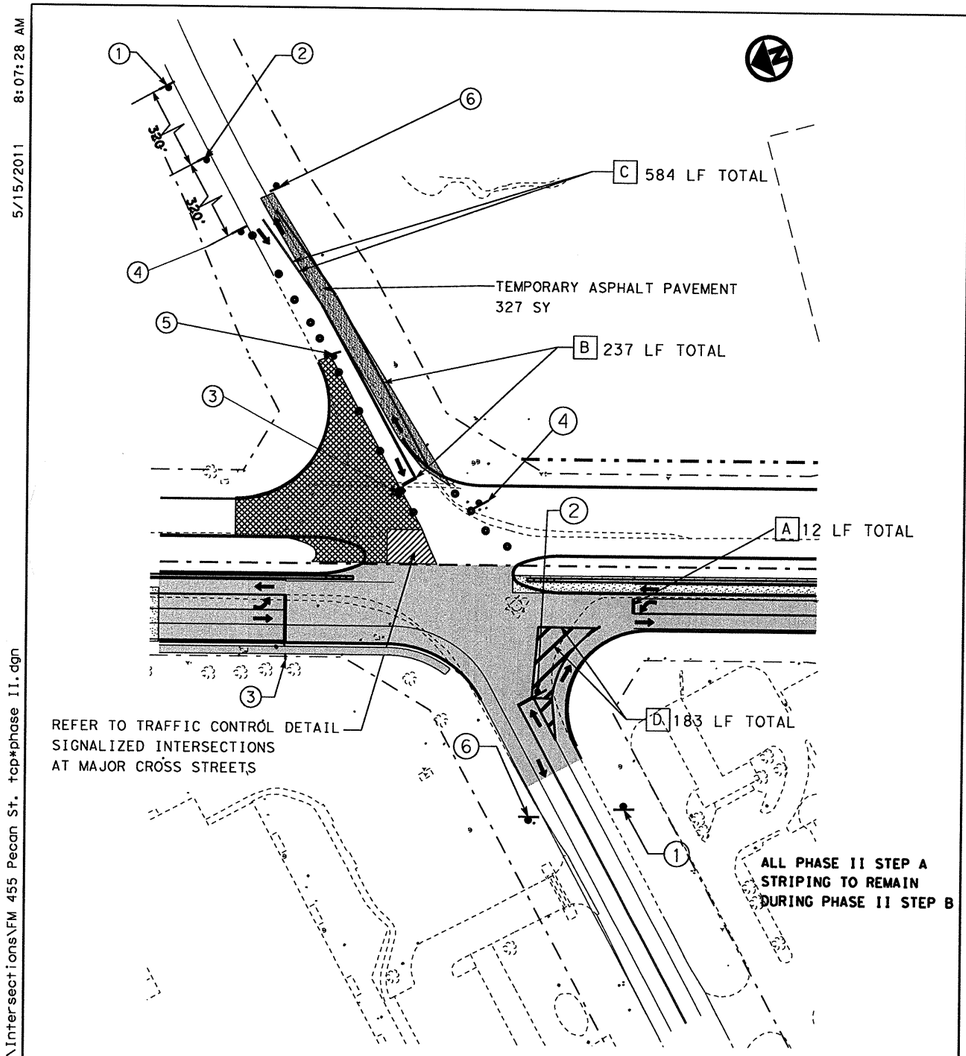

PHASED CONSTRUCTION STEP A DURING PHASE II- NB
SH 289 CONSTRUCTION

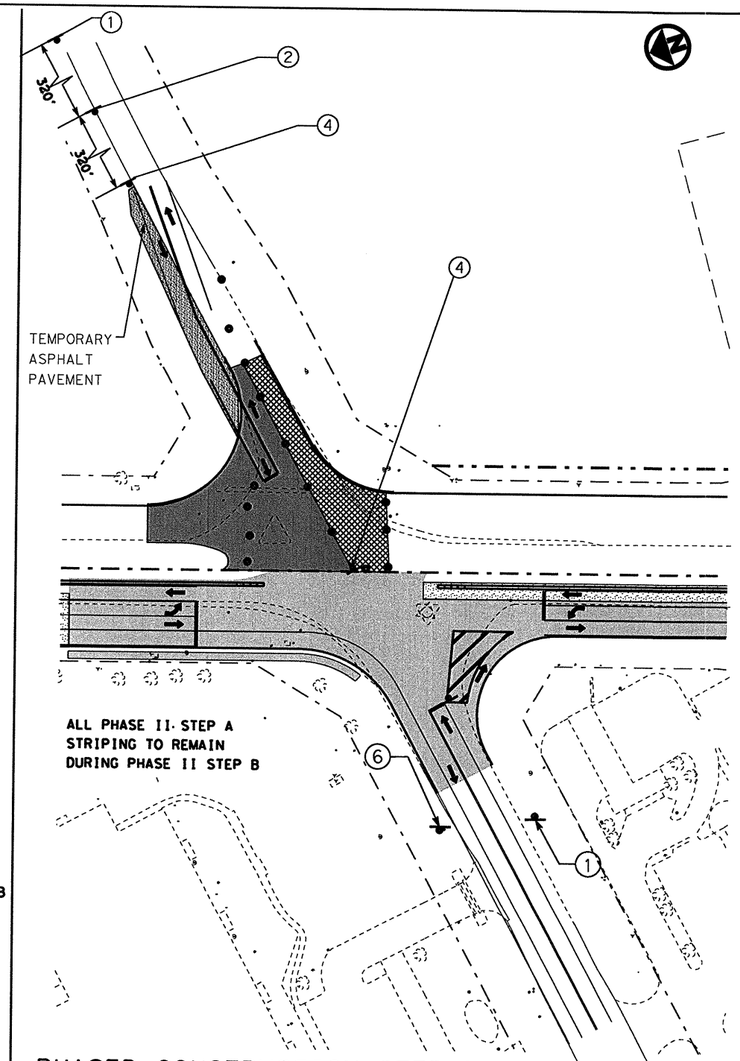

PHASED CONSTRUCTION STEP B DURING PHASE II- NB
SH 289 CONSTRUCTION

NOTES:

1. FM 455/ PECAN ST. MAY REMAIN CLOSED TEMPORARILY TO THRU TRAFFIC IN ONE DIRECTION DURING STEP A CONSTRUCTION PHASE FOR THE LAYING OF TRUNK SYSTEM IN A EXPEDITOUS AND ECONOMICAL MANNER. CONTRACTOR SHALL USE FAST TRACK HIGH EARLY STRENGTH (HES) CONCRETE.

2. TEMPORARY ASPHALT PAVEMENT QUANTITY REQUIRED TO CONSTRUCT SMOOTH RIDING SURFACE INCLUDING ASPHALT RAMP FOR TRAFFIC MOVEMENT ACROSS CONSTRUCTION AREA SHALL BE SUBSIDIARY TO ITEM 502.

3. AT THE END OF EACH WORK DAY, THE CONTRACTOR SHALL RESTORE NORMAL OPERATION AT INTERSECTIONS. ENSURE THAT CROSS STREETS ARE WIDE ENOUGH TO PERMIT TWO LANES OF TRAFFIC AT ALL TIMES.

4. INTERSECTION WORK INCLUDES TEMPORARY SIGNALS ITEM 681 2001.

LEGEND

- TEMPORARY ASPHALT PAVEMENT
- INTERSECTION CONSTRUCTION AREA
- CONSTRUCTION ZONE THIS PHASE
- PAVEMENT CONSTRUCTION THIS PHASE
- PAVEMENT CONSTRUCTION PREVIOUS STEP
- PORTABLE CONCRETE TRAFFIC BARRIER (PCTB)
- LOW PROFILE CONCRETE BARRIER (LPCB)
- CHANNELIZATION DEVICES
- TYPE III BARRICADE
- SIGN
- TEMPORARY TRAFFIC

A WK ZN PAV. REMOV (W) (24")

B WK ZN PAV. REMOV (W) (4")

C 2-WK ZN PAV. REMOV (Y) (4")

D WK ZN PAV. REMOV (Y) (12")

1 ROAD WORK AHEAD — CW20-1D 48" X 48"

2 DETOUR AHEAD — CW20-2D 48"x 48"

3 STOP HERE ON RED — R10-6L 24"X30"

4 DETOUR — M4-10L

5 SHOULDER DROP-OFF — CW8-9A 48" x 48"

6 END ROAD WORK — G20-2a 48"X24"

STATE OF TEXAS
NICHOLAS VON SPENCER
93702
LICENSED
PROFESSIONAL ENGINEER

Signature of Registrant & Date, P.E. 5-25-11

Texas Department of Transportation
© 2011

FM 455/PECAN ST. INTERSECTION TRAFFIC CONTROL PLAN PHASE II

SCALE: N.T.S. SHEET 2 OF 2

DESIGN	FED. RD. DIV. NO.	STATE PROJECT NO.		HIGHWAY NO.
NVS	6	(SEE TITLE SHEET)		SH 289
GRAPHICS	STATE	DISTRICT	COUNTY	SHEET NO.
NVS	TEXAS	DALLAS	COLLIN	103
CHECK	CONTROL	SECTION	JOB	
NVS	0091	04	055	
CHECK				

T:\DALDGN*A\SH 289 Celina\THE PLANS\Traffic Control\Intersections\FM 455 Pecan St. top*phase II.dgn 5/15/2011 8:07:28 AM

R-201104-01

LEGEND

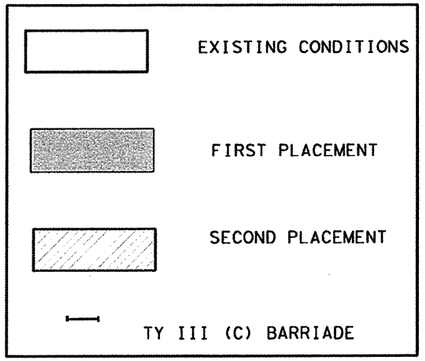

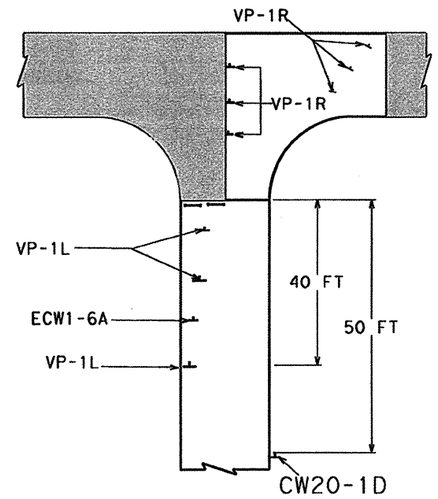

STAGE A

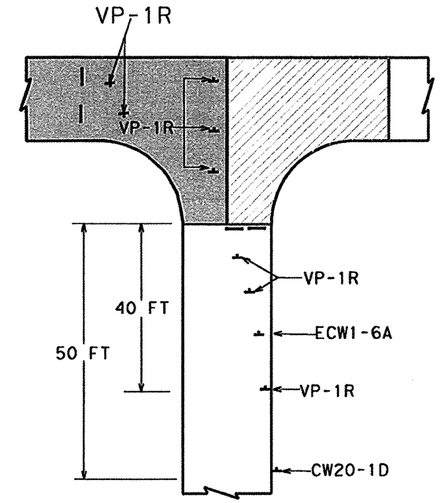

STAGE B

TYPICAL CONSTRUCTION & WARNING SIGNS AT DRIVEWAYS AND CROSS STREETS

NOTES:

1. VARIOUS INTERSECTIONS AND DRIVEWAYS ARE DESIGNATED AS A RENTAL CHARGE LOCATION. SEE SPECIAL PROVISION ITEM 008 " PROSECUTION AND PROGRESS". ALSO SEE GENERAL NOTES FOR IMPACT DAYS AND RENTAL CHARGES.

2. THE CONTRACTOR SHALL HAVE THE OPTION OF REVERSING STAGES OUTLINED TO EXPIDITE CONSTRUCTION OF PROPOSED PAVEMENT AS NEEDED FOR DRIVEWAYS AND NON-SIGNALIZED INTERSECTIONS

3. CONTRACTOR SHALL CONTACT THE ENGINEER AND PROPERTY OWNERS BEFORE DISTURBING EXISTING DRIVEWAYS. IF PROPERTY HAS MORE THAN ONE DRIVEWAY, CONTRACTOR SHALL NOT DISTURB MORE THAN ONE DRIVEWAY AT A TIME.

4. FOR PROPERTIES WITH ONLY ONE DRIVEWAY, CONTRACTOR SHALL PHASE CONSTRUCTION. PROVIDE TEMPORARY ACCESS AS DIRECTED BY THE ENGINEER. COST IS NOT PAID FOR DIRECTLY BUT IS CONSIDERED SUBSIDIARY TO ITEM 502 " BARRICADES, SIGNS, AND TRAFFIC HANDLING".

5. DRIVEWAYS SHALL BE OPENED TO TRAFFIC AS SOON AS COMPLETED WITH VERTICAL PANNELS PLACED ALONG THE OUTSIDE TO GUIDE TRAFFIC TO AND FROM THE EXISTING PAVEMENT.

6. TO EXPEDITE CONSTRUCTION OF SIDE STREETS AT NON-SIGNALIZED INTERSECTIONS, 4 INCHES OF TY B HMAC (PG 64-22) MAY BE SUBSTITUTED FOR 8 INCHES OF LIME TREATED SUBGRADE OR FLEX BASE AS SHOWN ON THE TYPICAL SECTIONS. THIS WILL BE PAID FOR UNDER ITEM 340-2011. EXTRA EXCAVATION OR EMBANKMENT (IF REQUIRED) WILL BE PAID FOR UNDER THE APPROPRIATE BID ITEMS.

△2 Replaced 7/5/11 JB

STATE OF TEXAS
NICHOLAS VON SPENCER
93702
LICENSED
PROFESSIONAL ENGINEER

Signature of Registrant , P.E. & Date 7-5-11

Texas Department of Transportation
© 2011

MISCELLANEOUS TCP DETAILS FOR TYPICAL DRIVEWAYS AND NON-SIGNALIZED INTERSECTIONS

NTS

DESIGN	FED. RD. DIV. NO.	STATE PROJECT NO.		HIGHWAY NO.
NVS	6	(SEE TITLE SHEET)		SH 289
GRAPHICS NVS	STATE	DISTRICT	COUNTY	SHEET NO.
CHECK	TEXAS	18	COLLIN	104
CHECK	CONTROL	SECTION	JOB	
	0091	04	055	

DISCLAIMER: The use of this standard is governed by the "Texas Engineering Practice Act". No warranty of any kind is made by TxDOT for any purpose whatsoever. TxDOT assumes no responsibility for the conversion of this standard to other formats or for incorrect results or damages resulting from its use.

Barricade and Construction (BC) Standard Sheets General Notes:

1. The Barricade and Construction Standard Sheets (BC sheets) are intended to show typical examples for placement of temporary traffic control devices, construction pavement markings, and typical work zone signs. The information contained in these sheets meet or exceed the requirements shown in the "Texas Manual on Uniform Traffic Control Devices" (TMUTCD).
2. The development and design of the Traffic Control Plan (TCP) is the responsibility of the Engineer.
3. The Contractor may propose changes to the TCP that are signed and sealed by a licensed professional engineer for approval. The Engineer may develop, sign and seal Contractor proposed changes.
4. The Contractor is responsible for installing and maintaining the traffic control devices as shown in the plans. The Contractor may not move or change the approximate location of any device without the approval of the Engineer.
5. Geometric design of lane shifts and detours should, when possible, meet the applicable design criteria contained in manuals such as the American Association of State Highway and Transportation Officials (AASHTO), "A Policy on Geometric Design of Highways and Streets", the TxDOT "Roadway Design Manual" or engineering judgment.
6. When projects abut, the Engineer(s) may omit the END ROAD WORK, TRAFFIC FINES DOUBLE, and other advance warning signs if the signing would be redundant and the work areas appear continuous to the motorists. If the adjacent project is completed first, the Contractor shall erect the necessary warning signs as shown on these sheets, the TCP sheets or as directed by the Engineer. The BEGIN ROAD WORK NEXT X MILES sign shall be revised to show appropriate work zone distance.
7. The Engineer may require duplicate warning signs on the median side of divided highways where median width will permit and traffic volumes justify the signing.
8. All signs shall be constructed in accordance with the details found in the "Standard Highway Sign Designs for Texas," latest edition. Sign details not shown in this manual shall be shown in the plans or the Engineer shall provide a detail to the Contractor before the sign is manufactured.
9. The temporary traffic control devices shown in the illustrations of the BC sheets are examples. As necessary, the Engineer will determine the most appropriate traffic control devices to be used.
10. As shown on BC(2), the OBEY WARNING SIGNS STATE LAW sign and the WORK ZONE TRAFFIC FINES DOUBLE sign with plaque shall be erected in advance of the CSJ limits. The BEGIN ROAD WORK NEXT X MILES, CONTRACTOR and END ROAD WORK signs shall be erected at or near the CSJ limits.
11. Except for devices required by Note 10, traffic control devices should be in place only while work is actually in progress or a definite need exists.
12. The Engineer has the final decision on the location of all traffic control devices.
13. Inactive equipment and work vehicles, including workers' private vehicles must be parked away from travel lanes. They should be as close to the right-of-way line as possible, or located behind a barrier or guardrail, or as approved by the Engineer.

Worker Safety Apparel Notes:

1. Workers on foot who are exposed to traffic or to construction equipment within the right-of-way shall wear high-visibility safety apparel meeting the requirements of ISEA "American National Standard for High-Visibility Apparel" labeled as ANSI 107-2004 standard performance for Class 2 or 3 risk exposure. Class 3 garments should be considered for high traffic volume work areas or night time work.

Only pre-qualified products shall be used. The "Compliant Work Zone Traffic Control Devices List" (CWZTCD) describes prequalified products and their sources and may be found on-line at the web address given below or by contacting:

Texas Department of Transportation
Traffic Operations Division - TE
Phone (512) 416-3134

WEB ADDRESSES FOR REFERENCED DOCUMENTS

Compliant Work Zone Traffic Control Devices List (CWZTCD)
http://www.txdot.gov/publications/traffic.htm

Texas Manual on Uniform Traffic Control Devices (TMUTCD)
http://www.txdot.gov/publications/traffic.htm

Standard Highway Sign Designs for Texas (SHSD)
http://www.txdot.gov/publications/traffic.htm

Traffic Engineering Standard Sheets
http://www.txdot.gov/business/disclaim.htm

Material Producer List
http://www.txdot.gov/business/producer-list.htm

Departmental Material Specifications (DMS)
http://www.txdot.gov/services/construction/material-specifications/

Roadway Design Manual
http://www.txdot.gov/services/general-services/manuals.htm

Texas Department of Transportation
Traffic Operations Division

BARRICADE AND CONSTRUCTION GENERAL NOTES AND REQUIREMENTS

1 of 12 BC(1)-07

©TxDOT 11-4-02

DN: TXDOT	CK: TXDOT	DW: TXDOT	CK: TXDOT
CONT	SECT	JOB	HIGHWAY
0091	04	055	SH 289
DIST		COUNTY	SHEET NO.
DALLAS		COLLIN	105

REVISIONS
4-03
9-07

DATE:
FILE:

101

DISCLAIMER: The use of this standard is governed by the "Texas Engineering Practice Act". No warranty of any kind is made by TxDOT for any purpose whatsoever. TxDOT assumes no responsibility for the conversion of this standard to other formats or for incorrect results or damages resulting from its use.

TYPICAL LOCATION OF CROSSROAD SIGNS

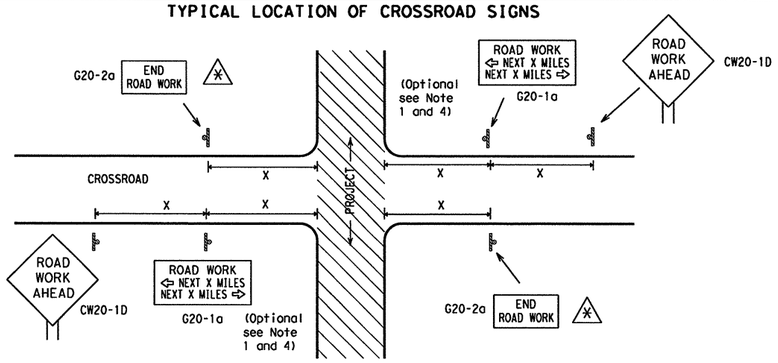

✱ May be mounted on back of CW20-1D sign with approval of engineer. (See note 2 below)

1. The typical minimum signing on a crossroad approach should be a CW20-1D ROAD WORK AHEAD sign and a G20-2a END ROAD WORK sign, unless noted otherwise in plans.
2. The Engineer may use the reduced size 36" x 36" ROAD WORK AHEAD (CW20-1D) sign mounted back to back with the reduced size 36" x 18" END ROAD WORK (G20-2a) sign on low volume crossroads (see Note 4 under "Typical Construction Warning Sign Size and Spacing"). See the "Standard Highway Sign Designs for Texas" manual for sign details. The Engineer may omit the advance warning signs on low volume crossroads. The Engineer will determine whether a road is low volume. This information shall be shown in the plans.
3. Based on existing field conditions, the Engineer/Inspector may require additional signs such as FLAGGER AHEAD, LOOSE GRAVEL, or other appropriate signs. When additional signs are required, these signs will be considered part of the minimum requirements. The Engineer/Inspector will determine the proper location and spacing of any sign not shown on the BC sheets, Traffic Control Plan sheets or the Work Zone Standard Sheets.
4. The G20-1a sign shall be required at high volume crossroads to advise motorists of the length of construction in either direction from the intersection. The Engineer will determine whether a roadway is considered high volume.
5. Additional traffic control devices may be shown elsewhere in the plans for higher volume crossroads.
6. When work occurs in the intersection area, appropriate traffic control devices, as shown elsewhere in the plans or as determined by the Engineer/Inspector, shall be in place.

T-INTERSECTION

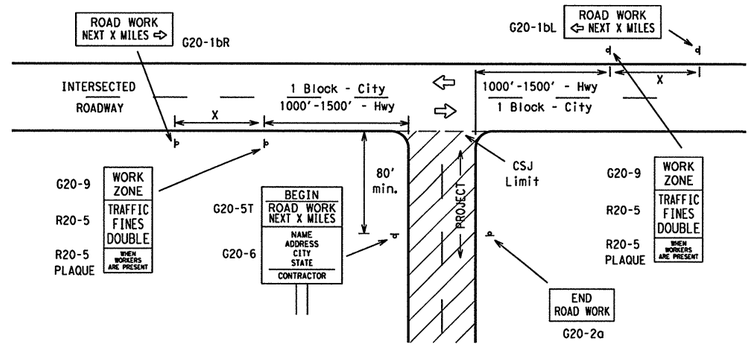

CSJ LIMITS AT T-INTERSECTION

1. The Engineer will determine the types and location of any additional traffic control devices, such as a flagger and accompanying signs, or other signs, that should be used when work is being performed at or near an intersection.
2. If construction closes the road at a T-intersection the Contractor shall place the G20-6 "Contractor Name" sign behind the Type III Barricades for the road closure (see BC(10) also). The G20-1bL and G20-1bR signs shall be replaced by the detour signing called for in the plans.

TYPICAL CONSTRUCTION WARNING SIGN SIZE AND SPACING [1,5,6]

SIZE

Sign Number or Series	Conventional Road	Expressway/ Freeway
CW20 [4], CW21, CW22, CW23, CW25	48" x 48"	48" x 48"
CW1, CW2, CW7, CW8, CW9, CW11, CW14	36" x 36"	48" x 48"
CW3, CW4, CW5, CW6, CW8-3, CW10, CW12	48" x 48"	48" x 48"

SPACING

Posted Speed	Sign Spacing "X" Δ
MPH	Feet (Apprx.)
30	120
35	160
40	240
45	320
50	400
55	500 [2]
60	600 [2]
65	700 [2]
70	800 [2]
75	900 [2]
80	1000 [2]
✱	✱ [3]

✱ For typical sign spacings on divided highways, expressways and freeways, see Part 6 of the "Texas Manual on Uniform Traffic Control Devices" (TMUTCD) typical application diagrams or TCP Standard Sheets.

Δ Minimum distance from work area to first Advance Warning sign nearest the work area and/or distance between each additional sign.

General Notes:

1. Special or larger size signs may be used as necessary.
2. Distance between signs should be increased as required to have 1500 feet advance warning.
3. Distance between signs should be increased as required to have ½ mile or more advance warning.
4. 36" x 36" ROAD WORK AHEAD (CW20-1D) signs may be used on low volume crossroads at the discretion of the Engineer. See Note 2 under "Typical Location of Crossroad Signs".
5. Only diamond shaped warning sign sizes are indicated.
6. See sign size listing in "TMUTCD", Sign Appendix or the "Standard Highway Sign Designs for Texas" manual for complete list of available sign design sizes.

WORK AREAS IN MULTIPLE LOCATIONS WITHIN CSJ LIMITS

SAMPLE LAYOUT OF SIGNING FOR WORK BEGINNING AT THE CSJ LIMITS

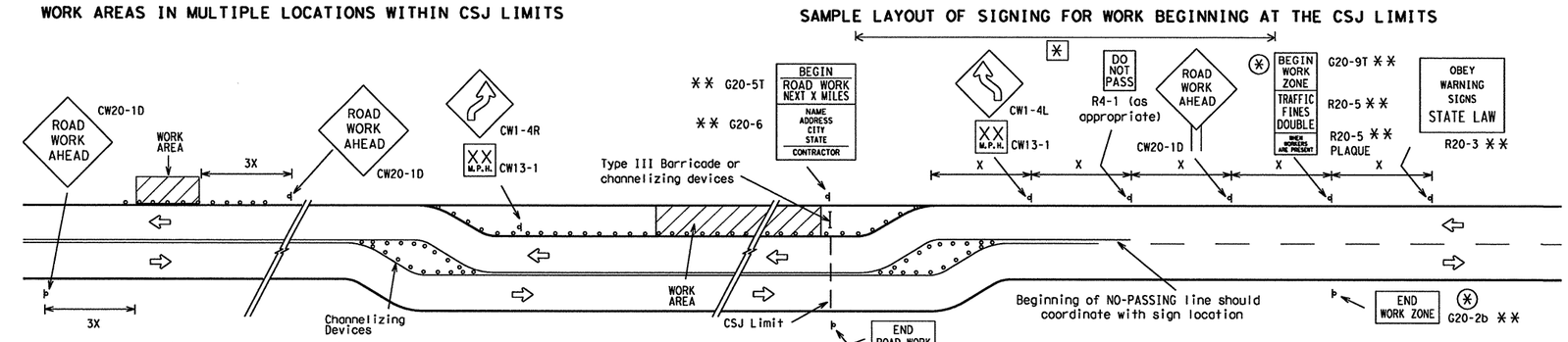

When extended distances occur between minimal work areas, the Engineer/Inspector should ensure additional Road Work Ahead (CW20-1D) signs are placed in advance of these work areas to remind drivers they are still within the project limits. See the applicable TCP sheets for exact location and spacing of signs and channelizing devices.

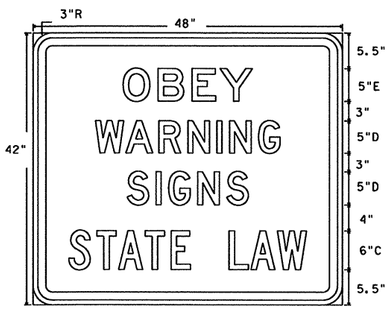

R20-3
Legend/Border - Black
Background - White

SAMPLE LAYOUT OF SIGNING FOR WORK BEGINNING DOWNSTREAM OF THE CSJ LIMITS

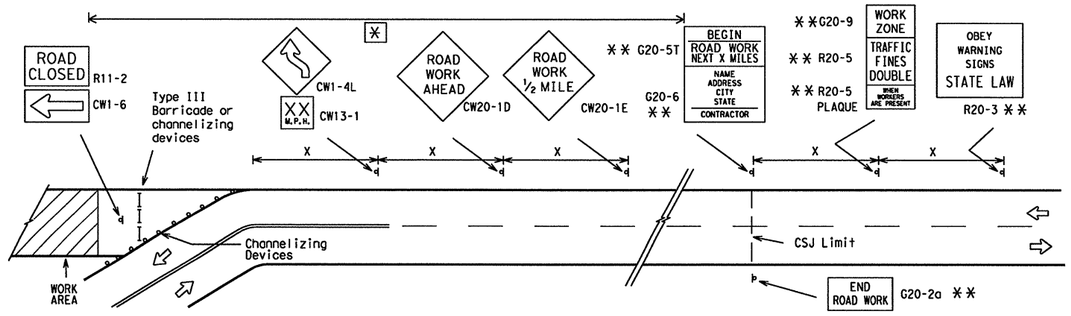

NOTES

The Contractor shall determine the appropriate distance to be placed on the G20-1 series signs and G20-5T sign for each specific project. This distance shall replace the "X" and shall be rounded to the nearest whole mile with the approval of the Engineer. No decimals shall be used.

(✱) The G20-9T and G20-2b shall be used when advance signs are required outside the CSJ Limits. They inform the motorist of entering or leaving a work zone where traffic fines may double if workers are present.

✱✱ Required CSJ Limit signing. See Note 10 on BC(1).

[✱] Area for placement of "ROAD WORK AHEAD" sign and other signs or devices as called for on the Traffic Control Plan.

LEGEND

- Sign
- Channelizing Devices
- Type III Barricade
- X See Typical Construction Warning Sign Size and Spacing chart or the TMUTCD for sign spacing requirements.

Texas Department of Transportation
Traffic Operations Division

BARRICADE AND CONSTRUCTION PROJECT LIMIT STANDARD

2 of 12 BC(2)-07

©TxDOT 11-4-02	DN: TXDOT	CK: TXDOT	DW: TXDOT	CK: TXDOT
9-07 REVISIONS	CONT	SECT	JOB	HIGHWAY
	0091	04	055	SH 289
	DIST		COUNTY	SHEET NO.
	DALLAS		COLLIN	106

DATE:
FILE:

R-201104-01

TYPICAL APPLICATION OF WORK ZONE SPEED LIMIT SIGNS

Work zone speed limits shall be regulatory, established in accordance with the "Procedures for Establishing Speed Zones," and approved by the Texas Transportation Commission, or by City Ordinance when within Incorporated City Limits.

Reduced speeds should only be posted in the vicinity of work activity and not throughout the entire project.

Regulatory work zone speed signs (R2-1) shall be removed or covered during periods when they are not needed.

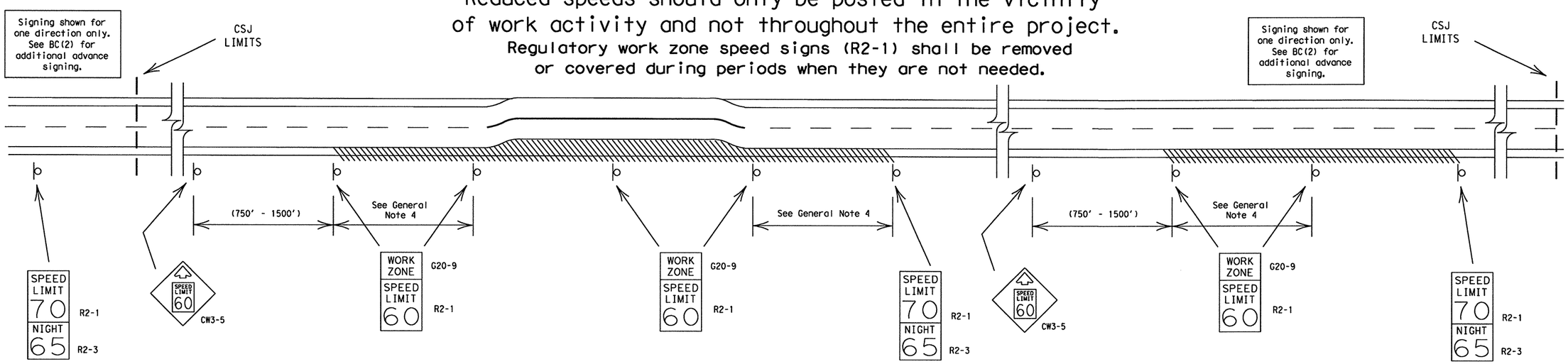

GUIDANCE FOR USE:

LONG/INTERMEDIATE TERM WORK ZONE SPEED LIMITS

This type of work zone speed limit should be included on the design of the traffic control plans when restricted geometrics with a lower design speed are present in the work zone and modification of the geometrics to a higher design speed is not feasible.

Long/Intermediate Term Work Zone Speed Limit signs, when approved as described above, should be posted and visible to the motorist when work activity is present. Work activity may also be defined as a change in the roadway that requires a reduced speed for motorists to safely negotiate the work area, including:

a) rough road or damaged pavement surface
b) substantial alteration of roadway geometrics (diversions)
c) construction detours
d) grade
e) width
f) other conditions readily apparent to the driver

As long as any of these conditions exist, the work zone speed limit signs should remain in place.

SHORT TERM WORK ZONE SPEED LIMITS

This type of work zone speed limit should be included on the design of the traffic control plans when workers or equipment are not behind concrete barrier, when work activity is within 15 feet of pavement edge or actually on the pavement.

Short Term Work Zone Speed Limit signs should be posted and visible to the motorists only when work activity is present. When work activity is not present, signs shall be removed or covered.
(See Removing or Covering on BC(4)).

GENERAL NOTES:

1. Regulatory work zone speed limits should be used only for sections of construction projects where speed control is of major importance.
2. Regulatory work zone speed limit signs shall be placed on supports at a 7 foot minimum mounting height.
3. Speed zone signs are illustrated for one direction of travel and are normally posted for each direction of travel.
4. Frequency of work zone speed limit signs should be:
   40 mph and greater 0.2 to 2 miles
   35 mph and less 0.2 to 1 mile
5. Regulatory speed limit signs shall have black legend and border on a white reflective background (See "Reflective Sheeting" on BC(4)).
6. Fabrication, errection and maintenance of the CW3-5 sign, G20-9 plaque and the R2-1 and R2-3 signs shall not be paid for directly, but shall be considered subsidiary to Item 502.
7. Turning signs from view, laying signs over or down will not be allowed, unless otherwise noted.
8. Techniques that may help reduce traffic speeds include but are not limited to:
   A. Law enforcement.
   B. Flagger stationed next to sign.
   C. Portable changeable message sign (PCMS).
   D. Low-power (drone) radar transmitter.
   E. Speed monitor trailers or signs.
9. Speeds shown on details above are for illustration only.
   Work Zone Speed Limits should only be posted as approved for each project.

Texas Department of Transportation
Traffic Operations Division

BARRICADE AND CONSTRUCTION WORK ZONE SPEED LIMIT STANDARD

3 of 12 BC(3)-07

© TxDOT 11-4-02

DN: TXDOT	CK: TXDOT	DW: TXDOT	CK: TXDOT
CONT	SECT	JOB	HIGHWAY
0091	04	055	SH 289
DIST		COUNTY	SHEET NO.
DALLAS		COLLIN	107

9-07 REVISIONS

DISCLAIMER: The use of this standard is governed by the "Texas Engineering Practice Act". No warranty of any kind is made by TxDOT for any purpose whatsoever. TxDOT assumes no responsibility for the conversion of this standard to other formats or for incorrect results or damages resulting from its use.

DATE:
FILE:

R-201104-01

DISCLAIMER: The use of this standard is governed by the "Texas Engineering Practice Act". No warranty of any kind is made by TxDOT for any purpose whatsoever. TxDOT assumes no responsibility for the conversion of this standard to other formats or for incorrect results or damages resulting from its use.

TYPICAL MINIMUM CLEARANCES FOR LONG TERM AND INTERMEDIATE TERM SIGNS

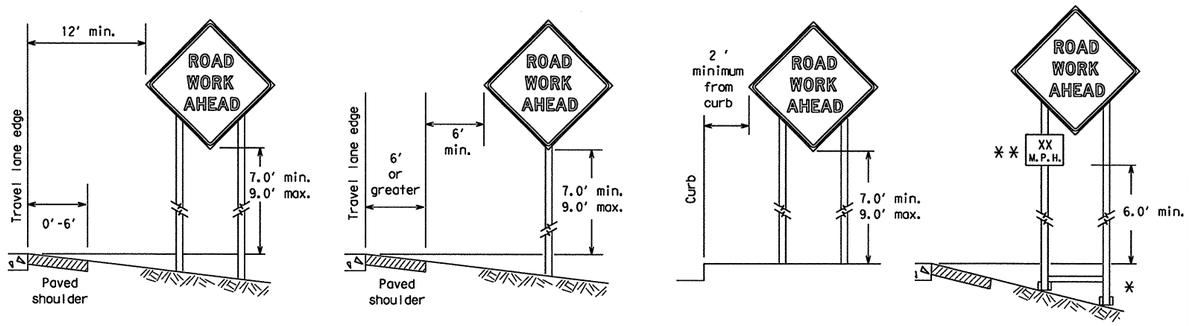

✱ When placing skid supports on unlevel ground, the leg post lengths must be adjusted so the sign appears straight and plumb. Objects shall NOT be placed under skids as a means of leveling.

✱✱ When plaques are placed on dual-leg supports, they should be attached to the upright nearest the travel lane. Supplemental plaques (advisory or distance) should not cover the surface of the parent sign.

ATTACHMENT FOR SIGN SUPPORTS

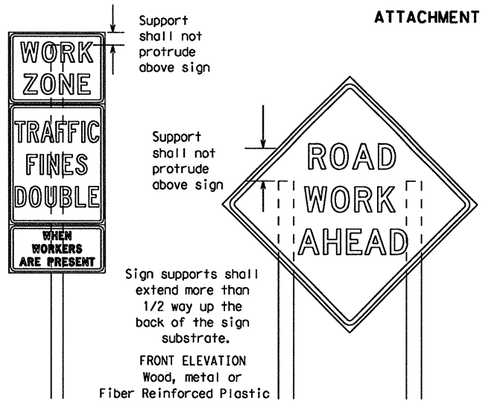

Splicing embedded perforated square metal tubing in order to extend post height will only be allowed when the splice is made using four bolts, two above and two below the spice point. Splice must be located entirely behind the sign substrate, not near the base of the support. Splice insert lengths should be at least 5 times nominal post size, centered on the splice and of at least the same guage material.

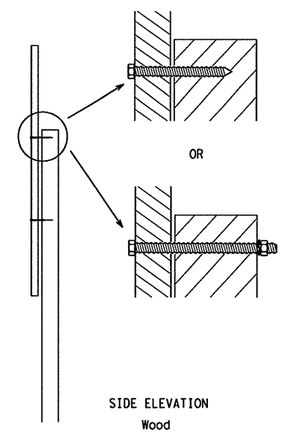

Attachment to wooden supports will be by bolts and nuts or screws. Use TxDOT's or manufacturer's recommended procedures for attaching sign substrates to other types of sign supports

Nails will NOT be allowed.

Each sign shall be attached directly to the sign support. Multiple signs shall not be joined or spliced by any means. Wood supports shall not be extended or repaired by splicing or other means.

STOP/SLOW PADDLES

1. STOP/SLOW paddles are the primary method to control traffic by flaggers. The STOP/SLOW paddle size should be 24" x 24" as detailed below.
2. When used at night, the STOP/SLOW paddle shall be retroreflectorized.
3. STOP/SLOW paddles may be attached to a staff with a minimum length of 6' to the bottom of the sign.
4. Any lights incorporated into the STOP or SLOW paddle faces shall only be as specifically described in Section 6E.03 Hand Signaling Devices in the TMUTCD.

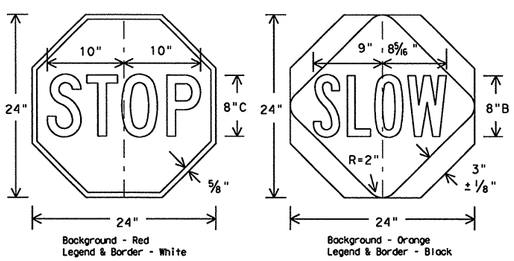

CONTRACTOR REQUIREMENTS FOR MAINTAINING PERMANENT SIGNS WITHIN THE PROJECT LIMITS

1. Permanent signs are used to give notice of traffic laws or regulations, call attention to conditions that are potentially hazardous to traffic operations, show route designations, destinations, directions, distances, services, points of interest, and other geographical, recreational, or cultural information. Drivers proceeding through a work zone need the same, if not better route guidance as normally installed on a roadway without construction.
2. When permanent regulatory or warning signs conflict with work zone conditions, remove or cover the permanent signs until the permanent sign message matches the roadway condition.
3. When existing permanent signs are moved and relocated due to construction purposes, they shall be visible to motorists at all times.
4. If existing signs are to be relocated on their original supports, they shall be installed on crashworthy bases as shown on the SMD Standard sheets. The signs shall meet the required mounting heights shown on the BC Sheets or the SMD Standards. This work should be paid for under the appropriate pay item for relocating existing signs.
5. If permanent signs are to be removed and relocated using temporary supports, the Contractor shall use crashworthy supports as shown on the BC sheets or the CWZTCD. The signs shall meet the required mounting heights shown on the BC Sheets or the SMD Standards during construction. This work should be paid for under the appropriate pay item for relocating existing signs.
6. Any sign or traffic control device that is struck or damaged by the Contractor or his/her construction equipment shall be replaced as soon as possible by the Contractor to ensure proper guidance for the motorists. This will be subsidiary to Item 502.

GENERAL NOTES FOR WORK ZONE SIGNS

1. Contractor shall install and maintain signs in a straight and plumb condition and/or as directed by the Engineer.
2. Wooden sign posts shall be painted white.
3. Barricades shall NOT be used as sign supports.
4. Nails shall NOT be used to attach signs to any support.
5. All signs shall be installed in accordance with the plans or as directed by the Engineer. Signs shall be used to regulate, warn, and guide the traveling public safely through the work zone.
6. The Contractor may furnish either the sign design shown in the plans or in the "Standard Highway Sign Designs for Texas" (SHSD). The Engineer/Inspector may require the Contractor to furnish other work zone signs that are shown in the TMUTCD but may have been omitted from the plans. Any variation in the plans shall be documented by written agreement between the Engineer and the Contractor's Responsible Person. All changes must be documented in writing before being implemented. This can include documenting the changes in the Inspector's TxDOT diary and having both the Inspector and Contractor initial and date the agreed upon changes.
7. The Contractor shall furnish sign supports listed in the "Compliant Work Zone Traffic Control Device List" (CWZTCD). The Contractor shall install the sign support in accordance with the manufacturer's recommendations. If there is a question regarding installation procedures, the Contractor shall furnish the Engineer a copy of the manufacturer's installation recommendations so the Engineer can verify the correct procedures are being followed.
8. The Contractor is responsible for installing signs on approved supports and replacing signs with damaged or cracked substrates and/or damaged or marred reflective sheeting as directed by the Engineer/Inspector.
9. Identification markings may be shown only on the back of the sign substrate. The maximum height of letters and/or company logos used for identification shall be 1 inch.
10. The Contractor shall replace damaged wood posts. New or damaged wood sign posts shall not be spliced.

DURATION OF WORK (as defined by the "Texas Manual on Uniform Traffic Control Devices" Part 6)

1. The types of sign supports, sign mounting height, the size of signs, and the type of sign substrates can vary based on the type of work being performed. The Engineer is responsible for selecting the appropriate size sign for the type of work being performed. The Contractor is responsible for ensuring the sign support, sign mounting height and substrate meets manufacturer's recommendations in regard to crashworthiness and duration of work requirements.
   a. Long-term stationary - work that occupies a location more than 3 days.
   b. Intermediate-term stationary - work that occupies a location more than one daylight period up to 3 days, or nightime work lasting more than one hour.
   c. Short-term stationary - daytime work that occupies a location for more than 1 hour in a single daylight period.
   d. Short, duration - work that occupies a location up to 1 hour.
   e. Mobile - work that moves continuously or intermittently (stopping for up to approximately 15 minutes.)

SIGN MOUNTING HEIGHT

1. The bottom of Long-term/Intermediate-term signs shall be at least 7 feet, but not more than 9 feet, above the paved surface, except as shown for supplemental plaques mounted below other signs.
2. The bottom of Short-term/Short Duration signs shall be a minimum of 1 foot above the pavement surface but no more than 2 feet above the ground.
3. Long-term/Intermediate-term Signs may be used in lieu of Short-term/Short Duration signing.
4. Short-term/Short Duration signs shall be used only during daylight and shall be removed at the end of the workday. or raised to appropriate Long-term/Intermediate sign height.
5. Regulatory signs shall be mounted at least 7 feet, but not more than 9 feet, above the paved surface regardless of work duration.

SIZE OF SIGNS

1. The Engineer may allow the use of smaller size construction warning signs on secondary roads or city streets where speeds are low if the sign size is listed as an option on the "Typical Construction Warning Sign Size and Spacing" chart shown on BC(2).
2. The Contractor shall furnish the sign sizes shown in plans, the BC Sheets, the TCP sheets or as directed by the Engineer.

SIGN SUBSTRATES

1. The Contractor shall ensure the sign substrate is installed in accordance with the manufacturer's recommendations for the type of sign support that is being used. The CWZTCD lists each substrate that can be used on the different types and models of sign supports.
2. "Mesh" type materials are NOT an approved sign substrate, regardless of the tightness of the weave.
3. All wooden individual sign panels fabricated from 2 or more pieces shall have one or more plywood cleat, 1/2" thick by 6" wide, fastened to the back of the sign and extending fully across the sign. The cleat shall be attached to the back of the sign using wood screws that do not penetrate the face of the sign panel. The screws shall be placed on both sides of the splice and spaced at 6" centers. The Engineer may approve other methods of splicing the sign face.

REFLECTIVE SHEETING

1. All signs shall be retroreflective and constructed of sheeting meeting the color and retro-reflectivity requirements of DMS-8300 for rigid signs or DMS-8310 for roll-up signs. The web address for DMS specifications is shown on BC(1).
2. White sheeting, meeting the requirements of DMS-8300 Type C (High Specific Intensity), shall be used for signs with a white background.
3. Orange sheeting, meeting the requirements of DMS-8300 Type E (Fluorescent Prismatic), shall be used for rigid signs with orange backgrounds.

SIGN LETTERS

1. All sign letters and numbers shall be clear, and open rounded type uppercase alphabet letters as approved by the Federal Highway Administration (FHWA) and as published in the "Standard Highway Sign Design for Texas" manual. Signs, letters and numbers shall be of first class workmanship in accordance with Department Standards and Specifications.

REMOVING OR COVERING

1. When sign messages may be confusing or do not apply, the signs shall be removed or completely covered.
2. Long-term stationary or intermediate stationary signs installed on square metal tubing may be turned away from traffic 90 degrees when the sign message is not applicable. This type of sign support meets the crashworthiness standards regardless of the direction of impact. This technique may not be used for signs installed in the median of divided highways or near any intersections where the sign may be seen from approaching traffic.
3. Signs installed on wooden skids shall not be turned at 90 degree angles to the roadway. These signs should be removed or completely covered when not required.
4. When signs are covered, the material used shall be opaque, such as heavy mil black plastic, or other materials which will cover the entire sign face and maintain their opaque properties under automobile headlights at night, without damaging the sign sheeting.
5. Burlap shall NOT be used to cover signs.
6. Duct tape or other adhesive material shall NOT be affixed to a sign face. These materials can damage the retroreflectivity of sheeting.
7. Signs and anchor stubs shall be removed and holes backfilled upon completion of work.

SIGN SUPPORT WEIGHTS

1. Where sign supports require the use of weights to keep from turning over, the use of sandbags with dry, cohesionless sand is recommended.
2. The sandbags will be tied shut to keep the sand from spilling and to maintain a constant weight.
3. Rock, concrete, iron, steel or other solid objects shall not be permitted for use as sign support weights.
4. Sandbags should weigh a minimum of 35 lbs and a maximum of 50 lbs.
5. Sandbags shall be made of a durable material that tears upon vehicular impact.
6. Rubber (such as tire inner tubes) shall NOT be used for sandbags.
7. Rubber ballasts designed for channelizing devices should not be used for ballast on portable sign supports. Sign supports designed and manufactured with rubber bases may be used when shown on the CWZTCD list.
8. Sandbags shall only be placed along or laid over the base supports of the traffic control device and shall not be suspended above ground level or hung with rope, wire, chains or other fasteners. Sandbags shall be placed along the length of the skids to weigh down the sign support.
9. Sandbags shall NOT be placed under the skid and shall not be used to level sign supports placed on slopes.

Texas Department of Transportation
Traffic Operations Division

BARRICADE AND CONSTRUCTION TEMPORARY SIGN NOTES STANDARD

4 of 12 BC(4)-07

©TxDOT 11-4-02	DN: TXDOT	CK: TXDOT	DW: TXDOT	CK: TXDOT	
9-07 REVISIONS	CONT	SECT	JOB	HIGHWAY	
	0091	04	055	SH 289	
	DIST		COUNTY		SHEET NO.
	DALLAS		COLLIN		108

DATE:
FILE:

R-201104-01

DISCLAIMER: The use of this standard is governed by the "Texas Engineering Practice Act". No warranty of any kind is made by TxDOT for any purpose whatsoever. TxDOT assumes no responsibility for the conversion of this standard to other formats or for incorrect results or damages resulting from its use.

SKID MOUNTED WOOD SIGN SUPPORTS

LONG/INTERMEDIATE TERM STATIONARY - PORTABLE SKID MOUNTED SIGN SUPPORTS □

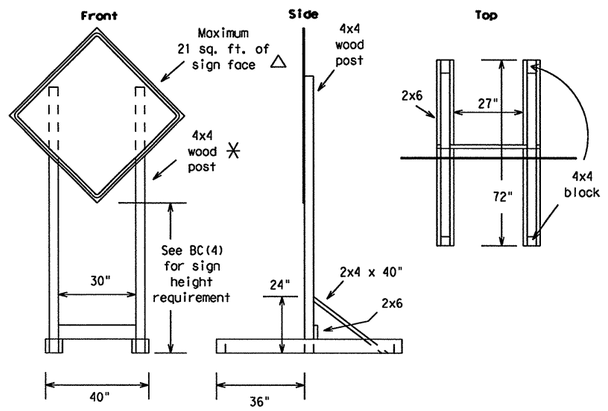

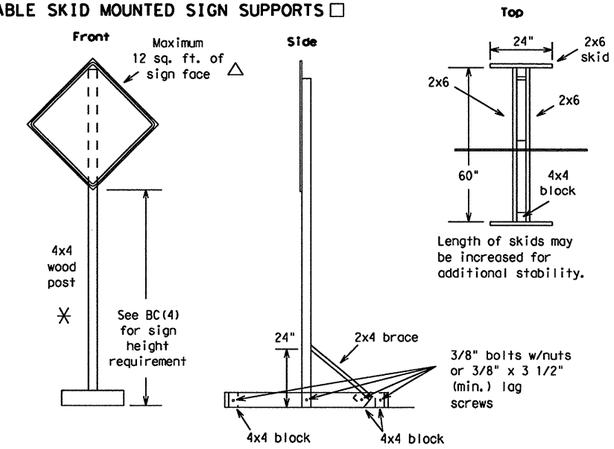

SKID MOUNTED PERFORATED SQUARE STEEL TUBING SIGN SUPPORTS

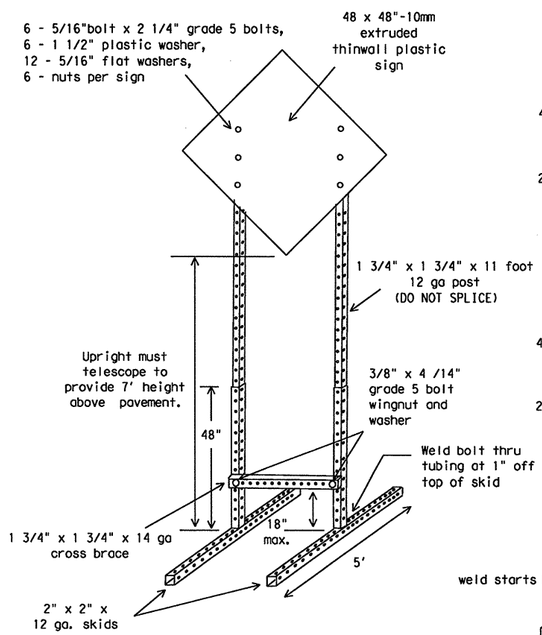

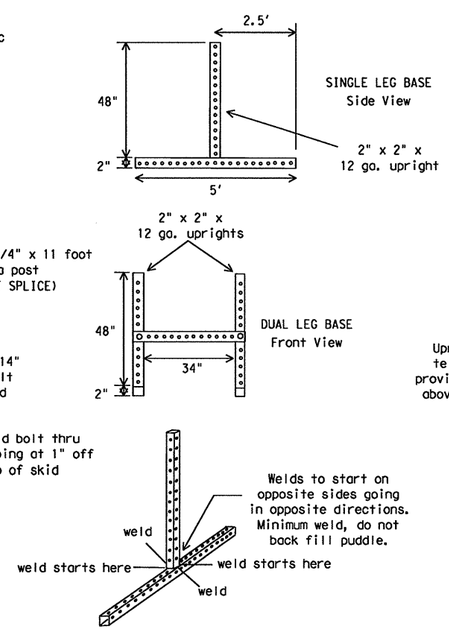

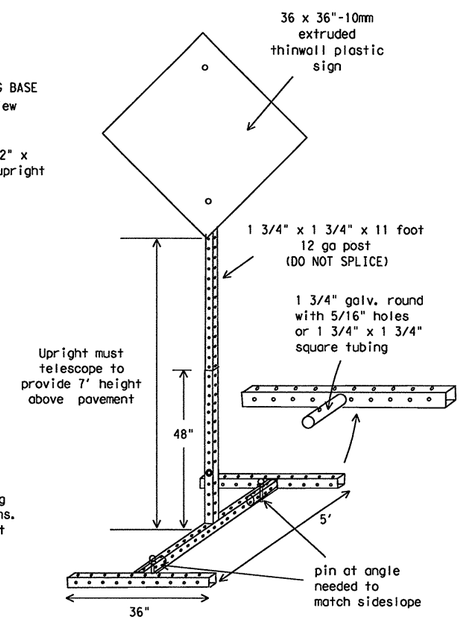

GROUND MOUNTED SIGN SUPPORTS

Refer to the CWZTCD and the manufacturer's installation procedure for each type sign support.
The maximum sign square footage shall adhere to the manufacturer's recommendation.
Two post installations can be used for larger signs.

PERFORATED SQUARE METAL TUBING

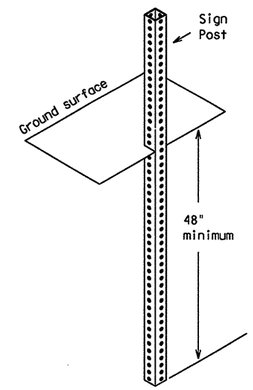

OPTION 1
(Direct Embedment)

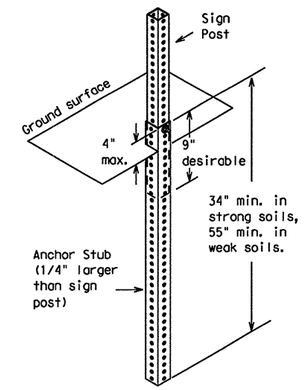

OPTION 2
(Anchor Stub)

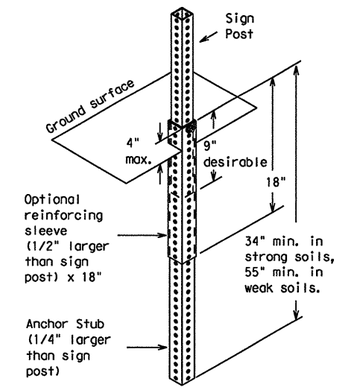

OPTION 3
(Anchor Stub and Reinforcing Sleeve))

WING CHANNEL

Lap-splice/base bolted anchor

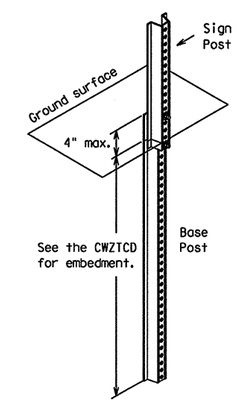

GENERAL NOTES

1. Nails may be used in the assembly of wooden sign supports, but 3/8" bolts with nuts or 3/8" x 3 1/2" lag screws must be used on every joint for final connection.
2. More details of approved Long/Intermediate and Short Term supports can be found on the CWZTCD list. See BC(1) for website location.
3. No more than 2 sign posts shall be placed within a 7 ft. circle, except for specific materials noted on the CWZTCD List.
4. When project is completed, all sign supports and foundations shall be removed from the project site. This will be considered subsidiary to Item 502.

□ See BC(4) for definition of "Work Duration."

✳ Wood sign posts MUST be one piece. Splicing will NOT be allowed. Posts shall be painted white.

△ See the CWZTCD for the type of sign substrate that can be used for each approved sign support.

WEDGE ANCHORS

Both steel and plastic Wedge Anchor Systems as shown on the SMD Standard Sheets may be used as temporary sign supports for signs up to 10 square feet of sign face. They may be set in concrete or in sturdy soils if approved by the Engineer. (See web address for "Traffic Engineering Standard Sheets" on BC(1)).

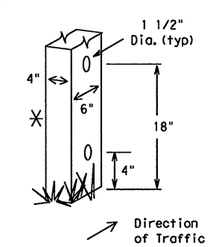

WOOD POST SYSTEM FOR GROUND MOUNTED SIGN SUPPORTS

Nominal Post Size	No. of Posts	Maximum Sq. feet of Sign Face	Minimum Soil Embedment	Drilled Hole(s) Required
4 x 4	1	12	36"	NO
4 x 4	2	21	36"	NO
4 x 6	1	21	36"	YES
4 x 6	2	36	36"	YES

Texas Department of Transportation
Traffic Operations Division

BARRICADE AND CONSTRUCTION TYPICAL SIGN SUPPORT STANDARD

5 of 12 BC(5)-07

©TxDOT 11-4-02

DN: TXDOT	CK: TXDOT	DW: TXDOT	CK: TXDOT
9-07 REVISIONS			

CONT	SECT	JOB	HIGHWAY
0091	04	055	SH 289
DIST		COUNTY	SHEET NO.
DALLAS		COLLIN	109

DATE:
FILE:

R-201104-01

DISCLAIMER: The use of this standard is governed by the "Texas Engineering Practice Act". No warranty of any kind is made by TxDOT for any purpose whatsoever. TxDOT assumes no responsibility for the conversion of this standard to other formats or for incorrect results or damages resulting from its use.

PORTABLE CHANGEABLE MESSAGE SIGNS

1. The Engineer/Inspector shall approve all messages used on portable changeable message signs (PCMS).
2. Messages on PCMS should contain no more than 8 words (about four to eight characters per word), not including simple words such as "TO," "FOR," "AT," etc.
3. Messages should consist of a single phase, or two phases that alternate. Three-phase messages are not allowed. Each phase of the message should convey a single thought, and must be understood by itself.
4. Use the word "EXIT" to refer to an exit ramp on a freeway; i.e., "EXIT CLOSED." Do not use the term "RAMP."
5. Always use the route or interstate designation (IH, US, SH, FM) along with the number when referring to a roadway.
6. When in use the bottom of a stationary PCMS message panel should be a minimum 7 feet above the roadway, where possible.
7. The message term "WEEKEND" should be used only if the work is to start on Saturday morning and end by Sunday evening at midnight. Actual days and hours of work should be displayed on the PCMS if work is to begin on Friday evening and/or continue into Monday morning.
8. The Engineer/Inspector may select one of two options which are available for displaying a two-phase message on a PCMS. Each phase may be displayed for either four seconds each or for three seconds each.
9. Do not "flash" messages or words included in a message. The message should be steady burn or continuous while displayed.
10. Do not present redundant information on a two-phase message; i.e., keeping two lines of the message the same and changing the third line.
11. Do not use the word "Danger" in message.
12. Do not display the message "LANES SHIFT LEFT" or "LANES SHIFT RIGHT" on a PCMS. Drivers do not understand the message.
13. Do not display messages that scroll horizontally or vertically across the face of the sign.
14. The following table lists abbreviated words and two-word phrases that are acceptable for use on a PCMS. Both words in a phrase must be displayed together. Words or phrases not on this list should not be abbreviated.
15. PCMS character height should be at least 18 inches for trailer mounted units. They should be visible from at least 1/2 (.5) mile and the text should be legible from at least 720 feet. Truck mounted units must have a character height of 10 inches and must be legible from at least 400 feet.
16. Each line of text should be centered on the message board rather than left or right justified.
17. If disabled, the PCMS should default to an illegible display that will not alarm motorists and will only be used to alert workers that the PCMS has malfunctioned. A pattern such as a series of horizontal solid bars is appropriate.

Word or Phrase	Abb.	Word or Phrase	Abb.
Access Road	ACCS RD	Major	MAJ
Air Quality	AIR QLTY	Miles	MI
Alternate	ALT	Miles Per Hour	MPH
Avenue	AVE	Minor	MNR
Best Route	BEST RTE	Monday	MON
Boulevard	BLVD	Normal	NORM
Bridge	BRDG	North	N
Cannot	CANT	Northbound	(route) N
Center	CNTR	Parking	PKING
Construction Ahead	CONST AHEAD	Parking Lot	PRK LOT
Detour Route	DETOUR RTE	Road	RD
Do Not	DONT	Right Lane	RGT LN
East	E	Saturday	SAT
Eastbound	(route) E	Service Road	SERV RD
Emergency	EMER	Shoulder	SHLDR
Emergency Vehicle	EMER VEH	Slippery	SLIP
Entrance, Enter	ENT	South	S
Express Lanes	EXP LANE	Southbound	(route) S
Expressway	EXPWY	Speed	SPD
XXXX Feet	XXXX FT	Street	ST
Fog Ahead	FOG AHD	Sunday	SUN
Freeway	FRWY, FWY	Telephone	PHONE
Freeway Blocked	FWY BLKD	Temporary	TEMP
Friday	FRI	Thursday	THURS
Hazardous Driving	HAZ DRIVING	To Downtown	TO DWNTN
Hazardous Material	HAZMAT	Traffic	TRAF
High-Occupancy Vehicle	HOV	Travelers	TRVLRS
Highway	HWY	Tuesday	TUES
Hours	HR	Time Minutes	TIME MIN
Information	INFO	Upper Level	UPPR LVL
It Is	ITS	Vehicle	VEH
Junction	JCT	Warning	WARN
Left	LFT	Wednesday	WED
Left Lane	LFT LN	Weight Limit	WT LIMIT
Lane Closed	LN CLSD	West	W
Lower Level	LOWR LVL	Westbound	(route) W
Maintenance	MAINT	Wet Pavement	WET PVMT
		Will Not	WONT

Roadway designation # IH-number, US-number, SH-number, FM-number

WHEN NOT IN USE, REMOVE THE PCMS FROM THE RIGHT-OF-WAY OR PLACE THE PCMS BEHIND BARRIER OR GUARDRAIL WITH SIGN PANEL TURNED PARALLEL TO TRAFFIC

RECOMMENDED PHASES AND FORMATS FOR PCMS MESSAGES DURING ROADWORK ACTIVITIES

(The Engineer may approve other messages not specifically covered here.)

Phase 1: Condition Lists

Road/Lane/Ramp Closure List

FREEWAY CLOSED X MILE	FRONTAGE ROAD CLOSED
ROAD CLOSED AT SH XXX	SHOULDER CLOSED XXX FT
ROAD CLSD AT FM XXXX	RIGHT LN CLOSED XXX FT
RIGHT X LANES CLOSED	RIGHT X LANES OPEN
CENTER LANE CLOSED	DAYTIME LANE CLOSURES
NIGHT LANE CLOSURES	I-XX SOUTH EXIT CLOSED
VARIOUS LANES CLOSED	EXIT XXX CLOSED X MILE
EXIT CLOSED	RIGHT LN TO BE CLOSED
MALL DRIVEWAY CLOSED	X LANES CLOSED TUE - FRI
XXXXXXXX BLVD CLOSED	

Other Condition List

ROADWORK XXX FT	ROAD REPAIRS XXXX FT
FLAGGER XXXX FT	LANE NARROWS XXXX FT
RIGHT LN NARROWS XXXX FT	TWO-WAY TRAFFIC XX MILE
MERGING TRAFFIC XXXX FT	CONST TRAFFIC XXX FT
LOOSE GRAVEL XXXX FT	UNEVEN LANES XXXX FT
DETOUR X MILE	ROUGH ROAD XXXX FT
ROADWORK PAST SH XXXX	ROADWORK NEXT FRI-SUN
BUMP XXXX FT	US XXX EXIT X MILES
TRAFFIC SIGNAL XXXX FT	LANES SHIFT *

* LANES SHIFT in Phase 1 must be used with STAY IN LANE in Phase 2.

Phase 2: Possible Component Lists

Action to Take/Effect on Travel List

MERGE RIGHT	FORM X LINES RIGHT
DETOUR NEXT X EXITS	USE XXXXX RD EXIT
USE EXIT XXX	USE EXIT I-XX NORTH
STAY ON US XXX SOUTH	USE I-XX E TO I-XX N
TRUCKS USE US XXX N	WATCH FOR TRUCKS
WATCH FOR TRUCKS	EXPECT DELAYS
EXPECT DELAYS	PREPARE TO STOP
REDUCE SPEED XXX FT	END SHOULDER USE
USE OTHER ROUTES	WATCH FOR WORKERS
STAY IN LANE *	

Location List

AT FM XXXX
BEFORE RAILROAD CROSSING
NEXT X MILES
PAST US XXX EXIT
XXXXXXX TO XXXXXXX
US XXX TO FM XXXX

Warning List

SPEED LIMIT XX MPH
MAXIMUM SPEED XX MPH
MINIMUM SPEED XX MPH
ADVISORY SPEED XX MPH
RIGHT LANE EXIT
USE CAUTION
DRIVE SAFELY
DRIVE WITH CARE

** Advance Notice List

TUE-FRI XX AM-X PM
APR XX-XX X PM-X AM
BEGINS MONDAY
BEGINS MAY XX
MAY X-X XX PM - XX AM
NEXT FRI-SUN
XX AM TO XX PM
NEXT TUE AUG XX
TONIGHT XX PM-XX AM

** See Application Guidelines Note 6.

Application Guidelines

1. Only 1 or 2 phases are to be used on a PCMS.
2. The 1st phase (or both) should be selected from the "Road/Lane/Ramp Closure List" and the "Other Condition List".
3. A 2nd phase can be selected from the "Action to Take/Effect on Travel, Location, General Warning, or Advance Notice Phase Lists".
4. A Location Phase is necessary only if a distance or location is not included in the first phase selected.
5. If two PCMS are used in sequence, they must be separated by a minimum of 1000 ft. Each PCMS shall be limted to two phases, and should be understandable by themselves.
6. For advance notice, when the current date is within seven days of the actual work date, calendar days should be replaced with days of the week. Advance notification should typically be for no more than one week prior to the work

Wording Alternatives

1. The words RIGHT, LEFT and ALL can be interchanged as appropriate.
2. Roadway designations IH, US, SH, FM and LP can be interchanged as appropriate.
3. EAST, WEST, NORTH and SOUTH (or abbreviations E, W, N and S) can be interchanged as appropriate.
4. Highway names and numbers replaced as appropriate.
5. ROAD, HIGHWAY and FREEWAY can be interchanged as needed.
6. AHEAD may be used instead of distances if necessary.
7. FT and MI, MILE and MILES interchanged as appropriate.
8. AT, BEFORE and PAST interchanged as needed.
9. Distances or AHEAD can be eliminated from the message if a location phase is used.

PCMS SIGNS WITHIN THE R.O.W. SHALL BE BEHIND GUARDRAIL OR CONCRETE BARRIER OR SHALL HAVE A MINIMUM OF FOUR (4) PLASTIC DRUMS PLACED PERPENDICULAR TO TRAFFIC ON THE UPSTREAM SIDE OF THE PCMS.

FULL MATRIX PCMS SIGNS

1. When Full Matrix PCMS signs are used, the character height and legibility/visibility requirements shall be maintained as listed in Note 15 under "PORTABLE CHANGEABLE MESSAGE SIGNS" above.
2. When symbol signs, such as the CW20-7a Flagger Symbol, are represented graphically on the Full Matrix PCMS sign and, with the approval of the Engineer, it shall maintain the legibility/visibility requirement listed above.
3. When symbol signs are represented graphically on the Full Matrix PCMS, they shall only supplement the use of the static sign represented, and shall not substitute for, or replace that sign.
4. A full matrix PCMS may be used to simulate a flashing arrow panel provided it meets the visibility, flash rate and dimming requirements on BC(7), for the same size arrow.

Texas Department of Transportation
Traffic Operations Division

BARRICADE AND CONSTRUCTION PORTABLE CHANGEABLE MESSAGE SIGN (PCMS) STANDARD

6 of 12 BC(6)-07

©TxDOT 11-4-02	DN: TXDOT	CK: TXDOT	DW: TXDOT	CK: TXDOT
9-07 REVISIONS	CONT	SECT	JOB	HIGHWAY
	0091	04	055	SH 289
	DIST		COUNTY	SHEET NO.
	DALLAS		COLLIN	110

DATE:
FILE:

R-201104-01

DISCLAIMER:
The use of this standard is governed by the "Texas Engineering Practice Act". No warranty of any kind is made by TxDOT for any purpose whatsoever. TxDOT assumes no responsibility for the conversion of this standard to other formats or for incorrect results or damages resulting from its use.

BARRIER REFLECTORS FOR CONCRETE TRAFFIC BARRIER AND ATTENUATORS

1. Barrier Reflectors shall be prequalified, and conform to the color and reflectivity requirements of DMS-8600. A list of prequalified Barrier Reflectors (Type C Delineators) can be found at the Material Producer List web address shown on BC(1).
2. Color of Barrier Reflectors shall be as specified in the TMUTCD. The cost of the reflectors shall be considered subsidiary to Item 502.

CONCRETE TRAFFIC BARRIER (CTB)

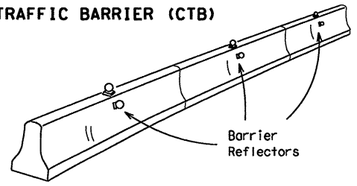

3. Where traffic is on one side of the CTB, two (2) Barrier Reflectors shall be mounted in approximately the midsection of each section of CTB. An alternate mounting location is uniformly spaced at one end of each CTB. This will allow for attachment of a barrier grapple without damaging the reflector. The Barrier Reflector mounted on the side of the CTB shall be located directly below the reflector mounted on top of the barrier, as shown in the detail above.
4. Where CTB separates two-way traffic, three barrier reflectors shall be mounted on each section of CTB. The reflector unit on top shall have two yellow reflective faces (Bi-Directional)while the reflectors on each side of the barrier shall have one yellow reflective face, as shown in the detail above.
5. When CTB separates traffic traveling in the same direction, no barrier reflectors will be required on top of the CTB.
6. Barrier Reflector units shall be yellow or white in color to match the edgeline being supplemented. Yellow Barrier Reflectors shall be made with Type E Fluorescent Prismatic Yellow Retroreflective Sheeting. White reflectors shall be made with Type D White Prismatic sheeting.
7. Maximum spacing of Barrier Reflectors is forty (40) feet.
8. Pavement markers or temporary flexible-reflective roadway marker tabs shall NOT be used as CTB delineation.
9. Attachment of Barrier Reflectors to CTB shall be per manufacturer's recommendations.
10. Missing or damaged Barrier Reflectors shall be replaced as directed by the Engineer.
11. Single slope barriers shall be delineated as shown on the above detail.

LOW PROFILE CONCRETE BARRIER (LPCB)

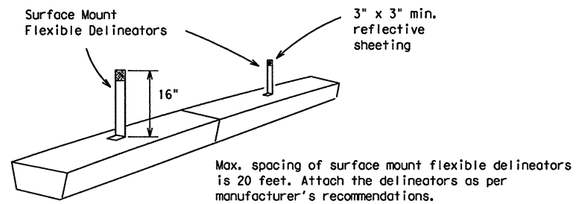

Max. spacing of surface mount flexible delineators is 20 feet. Attach the delineators as per manufacturer's recommendations.

DELINEATION OF END TREATMENTS

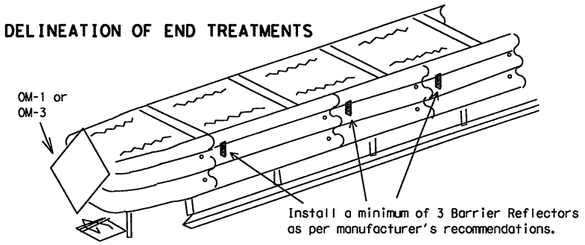

	APPROACHING TRAFFIC	
	BOTH SIDES	ONE SIDE
DELINEATION	OM-1	OM-3 or Vertical Panel

END TREATMENTS FOR CTB'S USED IN WORK ZONES

End treatments used on CTB's in work zones shall meet crashworthy standards as defined in the National Cooperative Highway Research Report 350. Refer to the CWZTCD List for approved end treatments and manufacturers.

TYPICAL FLASHING ARROW PANEL

Arrow Panels may be located behind channelizing devices in place for a shoulder taper or merging taper, otherwise they shall be delineated with four (4) channelizing devices placed perpendicular to traffic on the upstream side of traffic.

1. The Flashing Arrow Panel should be used for all lane closures on multi-lane roadways, or slow moving maintenance or construction activities on the travel lanes.
2. Flashing Arrow Panels should not be used on two-lane, two-way roadways, detours, diversions or work on shoulders unless the "CAUTION" display (see detail below) is used.
3. The Engineer/Inspector shall choose all appropriate signs, barricades and/or other traffic control devices that should be used in conjunction with the Flashing Arrow Panel.
4. The Flashing Arrow Panel should be able to display the following symbols:

Flashing RIGHT (LEFT) ARROW

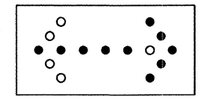

Flashing DOUBLE ARROW

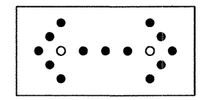

Flashing CAUTION

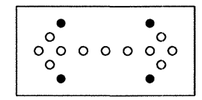

5. The "CAUTION" display consists of four corner lamps flashing simultaneously.
6. The straight line caution display is NOT ALLOWED.
7. The Flashing Arrow Panel shall be capable of minimum 50 percent dimming from rated lamp voltage. The flashing rate of the lamps shall not be less than 25 nor more than 40 flashes per minute.
8. Minimum lamp "on time" shall be approximately 50 percent for the flashing arrow and equal intervals of 25 percent for each sequential phase of the flashing chevron.
9. The sequential arrow display is NOT ALLOWED.
10. The flashing arrow display is the TxDOT standard; however, the sequential Chevron display may be used during daylight operations.

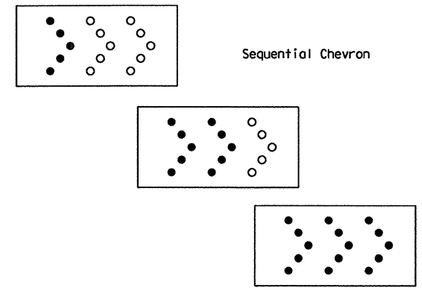

REQUIREMENTS

TYPE	MINIMUM SIZE	MINIMUM NUMBER OF PANEL LAMPS	MINIMUM VISIBILITY DISTANCE
B	30 x 60	13	3/4 mile
C	48 x 96	15	1 mile

ATTENTION: Flashing Arrow Panels shall be equipped with automatic dimming devices.

WHEN NOT IN USE, REMOVE THE ARROW PANEL FROM THE RIGHT-OF-WAY OR PLACE THE ARROW PANEL BEHIND CONCRETE TRAFFIC BARRIER OR GUARDRAIL.

11. The Flashing Arrow Panel shall be mounted on a vehicle, trailer or other suitable support.
12. A Flashing Arrow Panel SHALL NOT BE USED to laterally shift traffic.
13. A full matrix PCMS may be used to simulate a Flashing Arrow Panel provided it meets visibility, flash rate and dimming requirements on this sheet for the same size arrow.
14. Minimum mounting height of trailer mounted arrow panels should be 7 feet from roadway to bottom of panel.

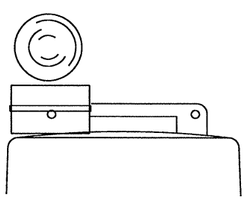

Type C Warning Light or approved substitute mounted adjacent to the travel way.

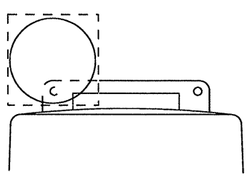

Warning reflector may be round or square.Must have a reflective surface area of at least 30 square inches

WARNING LIGHTS

1. Warning lights shall meet the requirements of the TMUTCD.
2. Warning lights shall NOT be installed on barricades.
3. Type A-Low Intensity Flashing Warning Lights are commonly used with drums. They are intended to warn of or mark a potentially hazardous area. Their use shall be as indicated on this sheet and/or other sheets of the plans by the designation "FL". The Type A Warning Lights shall not be used with signs manufactured with Type E Sheeting (Fluorescent Prismatic) meeting the requirements of Departmental Material Specification DMS-8300.
4. Type-C and Type D 360 degree Steady Burn Lights are intended to be used in a series for delineation to supplement other traffic control devices. Their use shall be as indicated on this sheet and/or other sheets of the plans by the designation "SB".
5. The Engineer/Inspector or the plans shall specify the location and type of warning lights to be installed on the traffic control devices.
6. When required by the Engineer, the Contractor shall furnish a copy of the warning lights certification. The warning light manufacturer will certify the warning lights meet the requirements of the latest ITE Purchase Specifications for Flashing and Steady-Burn Warning Lights.
7. When used to delineate curves, Type-C and Type D Steady Burn Lights should only be placed on the outside of the curve, not the inside.

WARNING LIGHTS MOUNTED ON PLASTIC DRUMS

1. Type A flashing warning lights are intended to warn drivers that they are approaching or are in a potentially hazardous area.
2. Type A random flashing warning lights are not intended for delineation and shall not be used in a series.
3. A series of sequential flashing warning lights placed on channelizing devices to form a merging taper may be used for delineation. If used, the successive flashing of the sequential warning lights should occur from the beginning of the taper to the end of the merging taper in order to identify the desired vehicle path. The rate of flashing for each light shall be 65 flashes per minute, plus or minus 10 flashes.
4. Type C and D steady-burn warning lights are intended to be used in a series to delineate the edge of the travel lane on detours, on lane changes, on lane closures, and on other similar conditions.
5. Type A, Type C and Type D warning lights shall be installed at locations as detailed on other sheets in the plans.
6. Warning lights shall not be installed on a drum that has a sign, chevron or vertical panel.
7. The maximum spacing for warning lights on drums should be identical to the channelizing device spacing.

WARNING REFLECTORS MOUNTED ON PLASTIC DRUMS AS A SUBSTITUTE FOR TYPE C (STEADY BURN) WARNING LIGHTS

1. A warning reflector or approved substitute may be mounted on a plastic drum as a substitute for a Type C, steady burn warning light at the discretion of the Contractor unless otherwise noted in the plans.
2. The warning reflector shall be yellow in color and shall be manufactured using a sign substrate approved for use with plastic drums listed on the CWZTCD.
3. The warning reflector shall have a minimum retroreflective surface area (one-side) of 30 square inches.
4. Round reflectors shall be fully reflectorized, including the area where attached to the drum.
5. Square substrates must have a minimum of 30 square inches of reflectorized sheeting. They do not have to be reflectorized where it attaches to the drum.
6. The side of the warning reflector facing approaching traffic shall have sheeting meeting the color and retroreflectivity requirements for DMS 8300-Type D (Non-fluorescent Prismatic).
7. When used near two-way traffic, both sides of the warning reflector shall be reflectorized.
8. The warning reflector should be mounted on the side of the handle nearest approaching traffic.
9. The maximum spacing for warning reflectors should be identical to the channelizing device spacing requirements.

TRUCK-MOUNTED ATTENUATORS

1. Truck-mounted attenuators (TMA) used on TxDOT facilities must meet the requirements outlined in the National Cooperative Highway Research Report No. 350 (NCHRP 350).
2. Refer to the CWZTCD for the requirements of Level 2 or Level 3 TMAs.
3. Refer to the dates shown in the CWZTCD to ensure that the TMA meets the age requirements and the crashworthiness criteria established by the Federal Highway Administration (FHWA) for TMAs.
4. Refer to the CWZTCD for a list of approved TMAs.
5. TMAs are required on freeways unless otherwise noted in the plans.
6. A TMA should be used anytime that it can be positioned approximately 30 to 100 feet in advance of the area of crew exposure without adversely affecting the work performance.
7. The only reason a TMA should not be required is when a work area is spread down the roadway and the work crew is an extended distance from the TMA.

Texas Department of Transportation
Traffic Operations Division

BARRICADE AND CONSTRUCTION ARROW PANEL, REFLECTORS, WARNING LIGHTS & ATTENUATOR STANDARD

7 of 12 BC(7)-07

© TxDOT 11-4-02

DN: TXDOT	CK: TXDOT	DW: TXDOT	CK: TXDOT
9-07 REVISIONS			

CONT	SECT	JOB	HIGHWAY
0091	04	055	SH 289
DIST		COUNTY	SHEET NO.
DALLAS		COLLIN	111

DATE:
FILE:

R-201104-01

DISCLAIMER: The use of this standard is governed by the "Texas Engineering Practice Act". No warranty of any kind is made by TxDOT for any purpose whatsoever. TxDOT assumes no responsibility for the conversion of this standard to other formats or for incorrect results or damages resulting from its use.

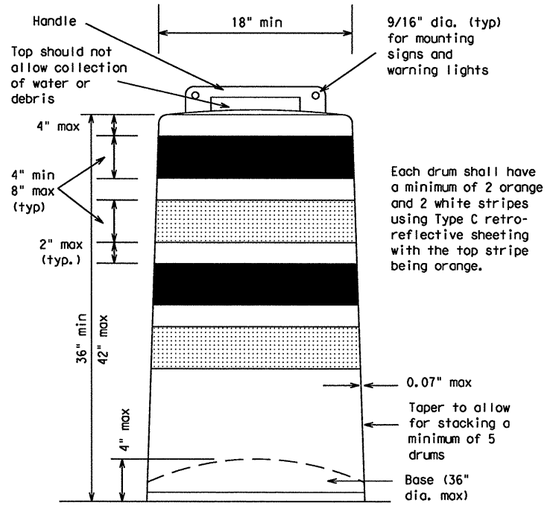

GENERAL NOTES

1. For long term stationary work zones on freeways, drums shall be used as the primary channelizing device.
2. For intermediate term stationary work zones on freeways, drums should be used as the primary channelizing device but may be replaced in tangent sections by vertical panels, or 42" two-piece cones. In tangent sections one-piece cones may be used with the approval of the Engineer but only if personnel are present on the project at all times to maintain the cones in proper position and location.
3. For short term stationary work zones on freeways, drums are the preferred channelizing device but may be replaced in tapers, transitions and tangent sections by vertical panels, two-piece cones or one-piece cones as approved by the Engineer.
4. Drums and all related items shall comply with the requirements of the current version of the "Texas Manual on Uniform Traffic Control Devices" (TMUTCD) and the "Compliant Work Zone Traffic Control Devices List" (CWZTCD).
5. Drums, bases, and related materials shall exhibit good workmanship and shall be free from objectionable marks or defects that would adversely affect their appearance or serviceability.
6. The Contractor shall have a maximum of 24 hours to replace any plastic drums identified for replacement by the Engineer/Inspector. The replacement device must be an approved device.

GENERAL DESIGN REQUIREMENTS

Prequalified plastic drums shall meet the following requirements:

1. Plastic drums shall be a two-piece design; the "body" of the drum shall be the top portion and the "base" shall be the bottom.
2. The body and base shall lock together in such a manner that the body separates from the base when impacted by a vehicle traveling at a speed of 20 MPH or greater but prevents accidental separation due to normal handling and/or air turbulence created by passing vehicles.
3. Plastic drums shall be constructed of lightweight flexible, and deformable materials. The Contractor shall NOT use metal drums or single piece plastic drums as channelization devices or sign supports.
4. Drums shall present a profile that is a minimum of 18 inches in width at the 36 inch height when viewed from any direction. The height of drum unit (body installed on base) shall be a minimum of 36 inches and a maximum of 42 inches.
5. The top of the drum shall have a built-in handle for easy pickup and shall be designed to drain water and not collect debris. The handle shall have a minimum of two widely spaced 9/16 inch diameter holes to allow attachment of a warning light, warning reflector unit or approved compliant sign.
6. The exterior of the drum body shall have a minimum of four alternating orange and white retroreflective circumferential stripes not less than 4 inches nor greater than 8 inches in width. Any non-reflectorized space between any two adjacent stripes shall not exceed 2 inches in width.
7. Bases shall have a maximum width of 36 inches, a maximum height of 4 inches, and a minimum of two footholds of sufficient size to allow base to be held down while separating the drum body from the base.
8. Plastic drums shall be constructed of ultra-violet stabilized, orange, high-density polyethylene (HDPE) or other approved material.
9. Drum body shall have a minimum unballasted weight of 7.7 lbs. and maximum unballasted weight of 11 lbs. The wall of the drum body shall be a minimum of 0.07 inch in thickness. Weight of any drum supplied shall not vary more than 0.5 lb. from that of the prequalified sample.
10. Drum and base shall be marked with manufacturer's name and model number.

RETROREFLECTIVE SHEETING

1. The stripes used on drums shall be constructed of sheeting meeting the color and retroreflectivity requirements of Departmental Materials Specification DMS-8300, "Flat Surface Reflective Sheeting." High Specific Intensity (Type C) retroreflective sheeting shall be supplied unless otherwise specified in the plans.
2. The sheeting shall be suitable for use on and shall adhere to the drum surface such that, upon vehicular impact, the sheeting shall remain adhered in-place and exhibit no delaminating, cracking, or loss of retroreflectivity other than that loss due to abrasion of the sheeting surface.

BALLAST

1. Unballasted bases shall be large enough to hold up to 50 lbs. of sand. This base, when filled with the ballast material, should weigh between 35 lbs (minimum) and 50 lbs (maximum). The ballast may be sand in one to three sandbags separate from the base, sand in a sand-filled plastic base, or other ballasting devices as approved by the Engineer. Stacking of sandbags will be allowed, however height of sandbags above pavement surface may not exceed 12 inches.
2. Bases with built-in ballast shall weigh between 40 lbs. and 50 lbs. Built-in ballast can be constructed of an integral crumb rubber base or a solid rubber base.
3. The ballast shall not be heavy objects, water, or any material that would become hazardous to motorists, pedestrians, or workers when the drum is struck by a vehicle.
4. When used in regions susceptible to freezing, drums shall have drainage holes in the bottoms so that water will not collect and freeze becoming a hazard when struck by a vehicle.
5. Ballast shall not be placed on top of drums.
6. Adhesives may be used to secure base of drums to pavement.

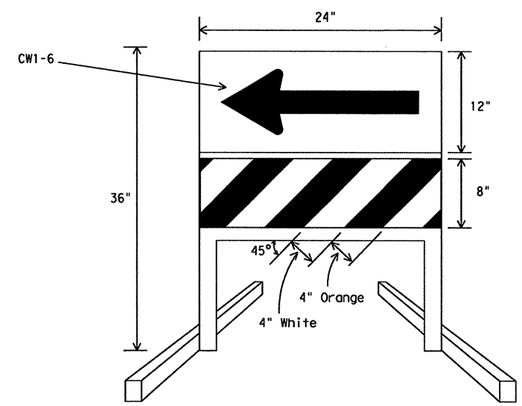

DIRECTION INDICATOR BARRICADE

1. The Direction Indicator Barricade may be used in tapers, transitions, and other areas where specific directional guidance to drivers is necessary.
2. If used, the Direction Indicator Barricade should be used in series to direct the driver through the transition and into the intended travel lane.
3. The Direction Indicator Barricade shall consist of One-Direction Large Arrow (CW1-6) sign in the size shown with a black arrow on a background of Type E Fluoprescent Prismatic Orange above a rail with Type C High Specific Intensity retroreflective sheeting in alternation 4" white and orange stripes sloping downward at an angle of 45 degrees in the direction road users are to pass.
4. Double arrows on the Direction Indicator Barricade will not be allowed.
5. Approved manufacturers are shown on the CWZTCD List. Ballast shall be as approved by the manufacturers instructions.

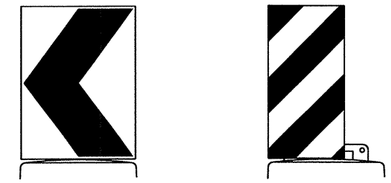

18" x 24" Sign
(Maximum Sign Dimension)
Chevron CW1-8, Opposing Traffic Lane Divider, Driveway sign D70a, Keep Right R4 series or other signs as approved by Engineer

12" x 24"
Vertical Panel
mount with diagonals sloping down towards travel way

Plywood, Aluminum or Metal sign substrates shall NOT be used on plastic drums

SIGNS, CHEVRONS, AND VERTICAL PANELS MOUNTED ON PLASTIC DRUMS

1. Signs used on plastic drums shall be manufactured using substrates listed on the CWZTCD.
2. Chevrons and other work zone signs with an orange background shall be manufactured with Type E (Fluorescent Prismatic) sheeting meeting the color and retroreflectivity requirements of DMS-8300, "Sign Face Material," unless otherwise specified in the plans.
3. Vertical Panels shall be manufactured with orange and white sheeting meeting the requirements of DMS-8300 Type C (High Specific Intensity). Diagonal stripes on Vertical Panels shall slope down toward the intended traveled lane.
4. Other sign messages (text or symbolic) may be used as approved by the Engineer. Sign dimensions shall not exceed 18 inches in width or 24 inches in height.
5. Signs shall be installed using a 1/2 inch bolt (nominal) and nut, two washers, and one locking washer for each connection.
6. Mounting bolts and nuts shall be fully engaged and adequately torqued. Bolts should not extend more than 1/2 inch beyond nuts.
7. Chevrons may be placed on drums on the outside of curves, on merging tapers or on shifting tapers. When used in these locations they may be placed on every drum or spaced not more than on every third drum. A minimum of three (3) should be used at each location called for in the plans.
8. R9-9, R9-10, R9-11 and R9-11a Sidewalk Closed signs which are 24 inches wide may be mounted on plastic drums, with approval of the Engineer.

Texas Department of Transportation
Traffic Operations Division

BARRICADE AND CONSTRUCTION CHANNELIZING DEVICES STANDARD

8 of 12

BC(8)-07

©TxDOT 11-4-02

DN: TXDOT	CK: TXDOT	DW: TXDOT	CK: TXDOT

REVISIONS
4-03
9-07

CONT	SECT	JOB	HIGHWAY
0091	04	055	SH 289
DIST		COUNTY	SHEET NO.
DALLAS		COLLIN	112

DATE:
FILE:

R-201104-01

DISCLAIMER:
The use of this standard is governed by the "Texas Engineering Practice Act". No warranty of any kind is made by TxDOT for any purpose whatsoever. TxDOT assumes no responsibility for the conversion of this standard to other formats or for incorrect results or damages resulting from its use.

CHANNELIZING DEVICES

VERTICAL PANELS (VPs)

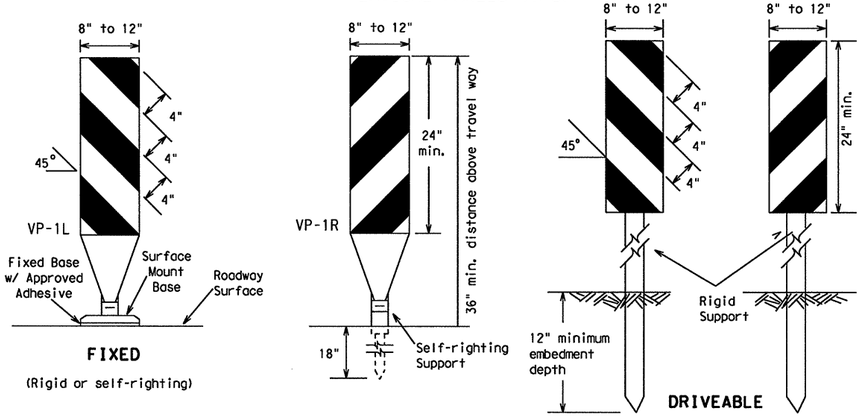

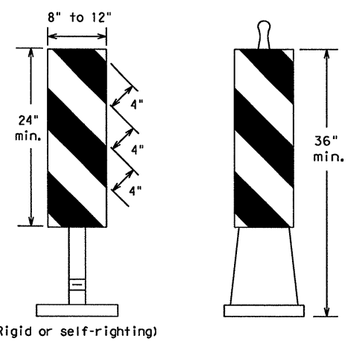

1. Vertical Panels (VP's) are normally used to channelize traffic or divide opposing lanes of traffic.
2. VP's may be used in daytime or nighttime situations. They may be used at the edge of shoulder drop-offs and other areas such as lane transitions where positive daytime and nighttime delineation is required. The Engineer/Inspector shall refer to the Roadway Design Manual Appendix B "Treatment of Pavement Drop-offs in Work Zones" for additional guidelines on the use of VP's for drop-offs.
3. VP's should be mounted back to back if used at the edge of cuts adjacent to two-way two lane roadways. Stripes are to be reflective orange and reflective white and should always slope downward toward the travel lane.
4. VP's used on expressways and freeways or other high speed roadways, shall have a minimum of 270 square inches of retroreflective area facing traffic.
5. Self-righting supports are available with portable base. See "Compliant Work Zone Traffic Control Devices List" (CWZTCD).
6. Sheeting for the VP's shall be retroreflective Type C (High Specific Intensity) conforming to Departmental Material Specification DMS-8300, unless noted otherwise.
7. Where the height of reflective material on the vertical panel is greater than 36 inches, a panel stripe of 6 inches shall be used.

CHEVRONS

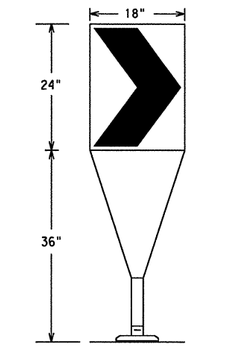

Fixed Base w/ Approved Adhesive (Driveable Base, or Flexible Support can be used)

1. The chevron shall be a vertical rectangle with a minimum size of 12 by 18 inches.
2. Chevrons are intended to give notice of a sharp change of alignment with the direction of travel and provide additional emphasis and guidance for vehicle operators with regard to changes in horizontal alignment of the roadway.
3. Chevrons, when used, shall be erected on the outside of a sharp curve or turn, or on the far side of an intersection. They shall be in line with and at right angles to approaching traffic. Spacing should be such that the motorist always has three in view, until the change in alignment eliminates its need.
4. To be effective, the chevron should be visible for at least 500 feet.
5. Chevrons shall be orange with a black nonreflective legend. Sheeting for the chevron shall be retroreflective Type E (Fluorescent Prismatic) conforming to Departmental Material Specification DMS-8300, unless noted otherwise. The legend shall be black vinyl non-reflective decal sheeting meeting the requirements of DMS-8300.
6. For Long Term Stationary use on tapers or transitions on freeways and divided highways self-righting chevrons may be used to supplement plastic drums but not to replace plastic drums.

GENERAL NOTES:

1. Work Zone channelizing devices illustrated on this sheet may be installed in close proximity to traffic and are suitable for use on high or low speed roadways. The Engineer/Inspector shall ensure that spacing and placement is uniform and in accordance with the "Texas Manual on Uniform Traffic Control Devices" (TMUTCD).
2. Channelizing devices shown on this sheet may have a driveable, fixed or portable base. The requirement for self-righting channelizing devices must be specified in the General Notes or other plan sheets.
3. Channelizing devices on self-righting supports should be used in work zone areas where channelizing devices are frequently impacted by errant vehicles or vehicle related wind gusts making alignment of the channelizing devices difficult to maintain. Locations of these devices shall be detailed elsewhere in the plans. These devices shall conform to the TMUTCD and the "Compliant Work Zone Traffic Control Devices List" (CWZTCD).
4. The Contractor shall maintain devices in a clean condition and replace damaged, nonreflective, faded, or broken devices and bases as required by the Engineer/Inspector. The Contractor shall be required to maintain proper device spacing and alignment.
5. Portable bases shall be fabricated from virgin and/or recycled rubber. The portable bases shall weigh approximately 35 lbs.
6. Pavement surfaces shall be prepared in a manner that ensures proper bonding between the adhesives, the fixed mount bases and the pavement surface. Adhesives shall be prepared and applied according to the manufacturer's recommendations.
7. The installation and removal of channelizing devices shall not cause detrimental effects to the final pavement surfaces, including pavement surface discoloration or surface integrity. Driveable bases shall not be permitted on final pavement surfaces. The Engineer/Inspector shall approve all application and removal procedures of fixed bases.
8. Examples on this sheet are commonly used channelizing devices in work zones. For other devices, refer to the CWZTCD.

OPPOSING TRAFFIC LANE DIVIDERS (OTLD)

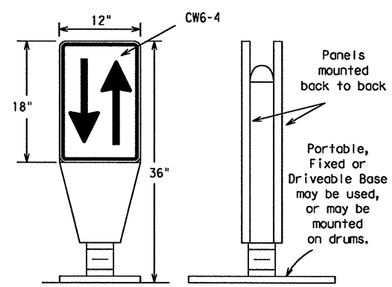

1. Opposing Traffic Lane Dividers (OTLD) are delineation devices designed to convert a normal one-way roadway section to two-way operation. OTLD's are used on temporary centerlines. The upward and downward arrows on the sign's face indicate the direction of traffic on either side of the divider. The base is secured to the pavement with an adhesive or rubber weight to minimize movement caused by a vehicle impact or wind gust.
2. The OTLD may be used in combination with simple tubular markers or VPs.
3. Spacing between the OTLD shall not exceed 500 feet. Tubular markers or VPs placed between the OTLD's should not exceed 100 foot spacing.
4. The OTLD shall be orange with a black nonreflective legend. Sheeting for the OTLD shall be retroreflective Type E (Fluorescent Prismatic) conforming to Departmental Material Specification DMS-8300, unless noted otherwise. The legend shall be black vinyl non-reflective decal sheeting meeting the requirements of DMS-8300.

Posted Speed	Formula	Minimum Desirable Taper Lengths ✱✱ 10' Offset	11' Offset	12' Offset	Suggested Maximum Spacing of Channelizing Devices On a Taper	On a Tangent
30	$L = \frac{WS^2}{60}$	150'	165'	180'	30'	60'-75'
35		205'	225'	245'	35'	70'-90'
40		265'	295'	320'	40'	80'-100'
45	L=WS	450'	495'	540'	45'	90'-110'
50		500'	550'	600'	50'	100'-125'
55		550'	605'	660'	55'	110'-140'
60		600'	660'	720'	60'	120'-150'
65		650'	715'	780'	65'	130'-165'
70		700'	770'	840'	70'	140'-175'
75		750'	825'	900'	75'	150'-185'
80		800'	880'	960'	80'	160'-195'

✱✱Taper lengths have been rounded off.
L=Length of Taper (FT.) W=Width of Offset (FT.)
S=Posted Speed (MPH)

HOLLOW OR WATER BALLASTED SYSTEMS USED AS LONGITUDINAL CHANNELIZING DEVICES OR BARRIERS

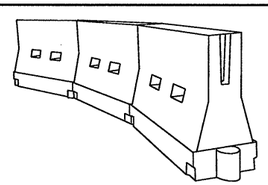

LONGITUDINAL CHANNELIZING DEVICES

1. Longitudinal channelizing devices are crashworthy, lightweight, deformable devices that are highly visible, have good target value and can be connected together. **They are not designed to contain or redirect a vehicle on impact.**
2. Longitudinal channelizing devices may be used instead of a line of cones or drums.
3. Longitudinal channelizing devices shall be placed in accordance to application and installation requirements specific to the device, and used only when shown on the CWZTCD list.
4. Longitudinal channelizing devices should not be used to provide positive protection for obstacles, pedestrians or workers.
5. Longitudinal channelizing devices shall be retroreflective, or supplemented with retroreflective delineation as required for temporary barriers on BC(7)-07.

WATER BALLASTED SYSTEMS USED AS BARRIERS

1. Water ballasted systems used as barriers shall not be used solely to channelize road users, but also to protect the work space per the appropriate NCHRP 350 crashworthiness requirements based on roadway speed and barrier application.
2. Water ballasted systems used to channelize vehicular traffic shall be supplemented with retroreflective delineation or channelizing devices to improve daytime/nighttime visibility. They may also be supplemented with pavement markings.
3. Water ballasted systems used as barriers shall be placed in accordance to application and installation requirements specific to the device, and used only when shown on the CWZTCD list.
4. Water ballasted systems used as barriers should not be used for a merging taper except in low speed (less than 45 MPH) urban areas. When used on a taper in a low speed urban area, the taper shall be delineated and the taper length should be designed to optimize road user operations considering the available geometric conditions.
5. When water ballasted systems used as barriers have blunt ends exposed to traffic, they should be attenuated as per manufacturer recommendations or flared to point outside the clear zone.

If used to channelize pedestrians, longitudinal channelizing devices or water ballasted systems must have a continuous detectable bottom for users of long canes and the top of the unit shall be not less than 32 inches in height.

VERTICAL PANELS & OPPOSING TRAFFIC LANE DIVIDERS SEPARATING TWO-WAY TRAFFIC (Typical application)

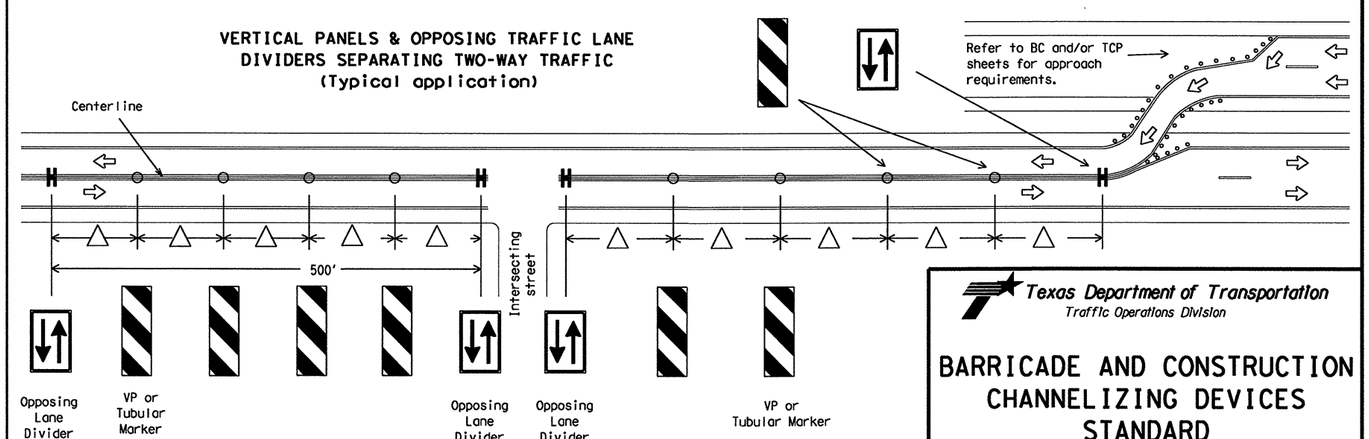

△ Spacing between the VP's or tubular markers shall not exceed 100 feet. On roadways with speeds less than 45 MPH, spacing between the tubular markers or VP's shall be as shown on the channelizing spacing table shown on this page. If the table shows spacing greater than 100 feet based on the roadway speed, then use a maximum of 100 feet spacing between the tubular markers or VP's. Every fifth channelizing device shall be an OTLD, except when the OTLD must be spaced closer to accomodate an intersection. Spacing between the OTLD shall not exceed 500 feet.

Texas Department of Transportation
Traffic Operations Division

BARRICADE AND CONSTRUCTION CHANNELIZING DEVICES STANDARD

9 of 12 BC(9)-07

©TxDOT 11-4-02	DN: TXDOT	CK: TXDOT	DW: TXDOT	CK: TXDOT
9-07 REVISIONS	CONT / SECT / JOB		HIGHWAY	
	0091 / 04 / 055		SH 289	
	DIST / COUNTY		SHEET NO.	
	DALLAS / COLLIN		113	

DATE:
FILE:

R-201104-01

DISCLAIMER: The use of this standard is governed by the "Texas Engineering Practice Act". No warranty of any kind is made by TxDOT for any purpose whatsoever. TxDOT assumes no responsibility for the conversion of this standard to other formats or for incorrect results or damages resulting from its use.

TYPE III BARRICADES

1. Refer to the Compliant Work Zone Traffic Control Devices List (CWZTCD) for details of the Type III Barricades and a list of all materials used in the construction of Type III Baricades.
2. Type III Barricades shall be used at each end of construction projects closed to all traffic.
3. Barricades extending across a roadway should have stripes that slope downward in the direction toward which traffic must turn in detouring. When both right and left turns are provided, the chevron striping may slope downward in both directions from the center of the barricade. Where no turns are provided at a closed road striping should slope downward in both directions toward the center of roadway.
4. Striping of rails, for the right side of the roadway, should slope downward to the left. For the left side of the roadway, striping should slope downward to the right.
5. Identification markings may be shown only on the back of the barricade rails. The maximum height of letters and/or company logos used for identification shall be 1".
6. Barricades shall not be placed parallel to traffic unless an adequate clear zone is provided.
7. Warning lights shall NOT be installed on barricades.
8. Where barricades require the use of weights to keep from turning over, the use of sandbags with dry, cohesionless sand is recommended. The sandbags will be tied shut to keep the sand from spilling and to maintain a constant weight. Sand bags shall not be stacked in a manner that covers any portion of a barricade rails reflective sheeting. Rock, concrete, iron, steel or other solid objects will NOT be permitted. Sandbags should weigh a minimum of 35 lbs and a maximum of 50 lbs. Sandbags shall be made of a durable material that tears upon vehicular impact. Rubber (such as tire inner tubes) shall not be used for sandbags. Sandbags shall only be placed along or upon the base supports of the device and shall not be suspended above ground level or hung with rope, wire, chains or other fasteners.
9. Sheeting for barricades shall be retroreflective Type C (High Specific Intensity) conforming to Departmental Material Specfication DMS-8300 unless otherwise noted.

Barricades shall NOT be used as a sign support.

TYPICAL STRIPING DETAIL FOR BARRICADE RAIL

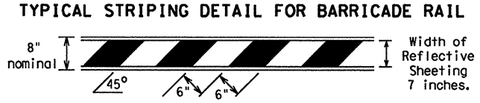

TYPICAL PANEL DETAIL FOR SKID OR POST TYPE BARRICADES

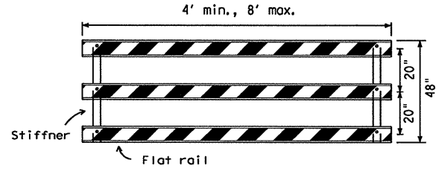

Stiffner may be inside or outside of support, but no more than 2 stiffeners shall be allowed on one barricade.

TYPE III BARRICADE (POST AND SKID) TYPICAL APPLICATION

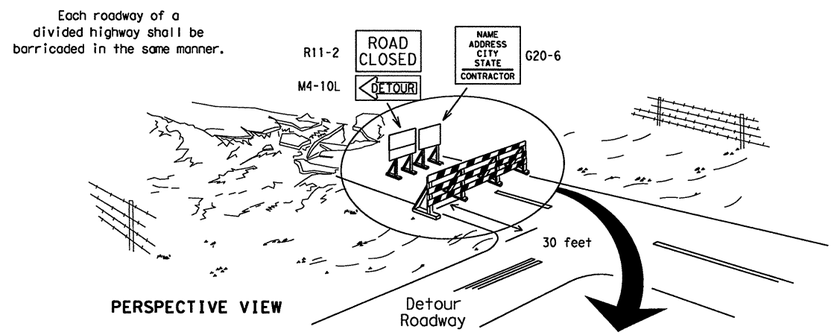

PERSPECTIVE VIEW

The three rails on Type III barricades shall be reflectorized orange and reflective white stripes on one side facing one-way traffic and both sides for two-way traffic.
Barricade striping should slant downward in the direction of detour.

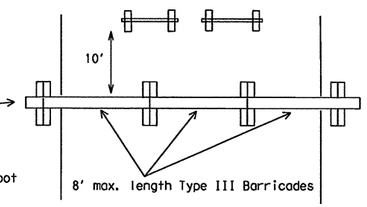

PLAN VIEW

1. Signs should be mounted on independent supports at a 7 foot mounting height in center of roadway. The signs should be a minimum of 10 feet behind Type III Barricades.
2. Advance signing shall be as specified elsewhere in the plans.

CULVERT WIDENING OR OTHER ISOLATED WORK WITHIN THE PROJECT LIMITS

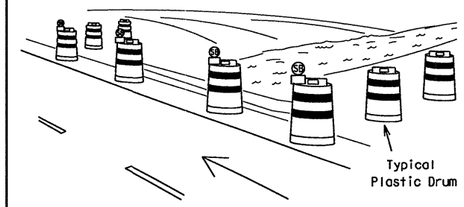

PERSPECTIVE VIEW

1. Where positive redirectional capability is provided, drums may be omitted.
2. Plastic construction fencing may be used with drums for safety as required in the plans.
3. Vertical Panels on flexible support may be substituted for drums when the shoulder width is less than 4 feet.
4. When the shoulder width is greater than 12 feet, steady-burn lights may be omitted if drums are used.
5. Drums must extend the length of the culvert widening.

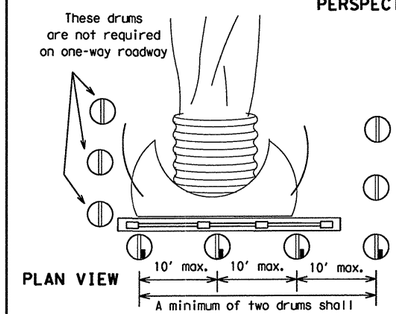

PLAN VIEW

Increase number of plastic drums on the side of approaching traffic if the crown width makes it necessary. (minimum of 2 and maximum of 4 drums)

Legend

- Plastic drum
- Plastic drum with steady burn light or yellow warning reflector
- (SB) Steady burn warning light or yellow warning reflector

CONES

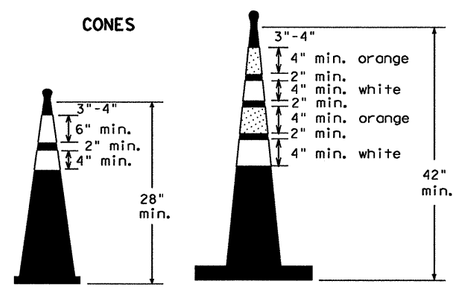

Two-Piece cones

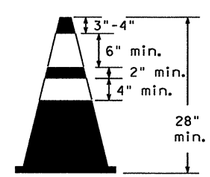

One-Piece cones

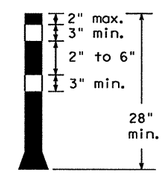

Tubular Marker

28" Cones shall have a minimum weight of 9 1/2 lbs.

42" 2-piece cones shall have a minimum weight of 30 lbs. including base.

1. Traffic cones and tubular markers shall be a minimum of 28 inches in height when used either on freeways or at nighttime.
2. Cones or tubular markers shall be predominantly orange, fluorescent red-orange, or fluorescent yellow-orange. They should be kept clean and bright for maximum visibility.
3. Cones used only for daytime operations do not require the reflectorized bands.
4. Cones and tubular markers used for nighttime operations shall be reflectorized. Reflectorized material shall have a smooth, sealed outer surface that displays the same approximate color during the day and night. The reflectorized bands shall be retroreflective Type C (High Specific Intensity) conforming to Departmental Material Specification DMS-8300, unless otherwise noted.
5. When used at night, appropriate personnel shall ensure that cones and tubular markers remain in their proper location and in an upright position.
6. Reflectorization of 28"cones shall consist of a minimum 6 inch band placed at least 3 inches but not more than 4 inches from the top, supplemented by a minimum 4 inch band spaced a minimum of 2 inches below the 6 inch band.
7. Reflectorization of 42" cones shall be provided by alternating 4 to 6" orange and white stripes with orange on top.
8. Reflectorization of tubular markers shall be a minimum of two 3 inch bands placed a maximum of 2 inches from the top with a maximum of 6 inches between bands.
9. One-piece cones or tubular markers are generally suitable for temporary usage (up to 8 hours) with other channelization devices such as vertical panels, drums or two-piece cones for long term usage. Care should be taken to ensure they remain in their proper location and in an upright position.
10. Cones or tubular markers used on each project shall be of the same size and shape.
11. The handle may be designed as a hook or other shape, fabricated from non-rigid materials similar to the cone material, and may extend up to a maximum of 8 inches above the top of cone. Length of the handle shall not be considered with regard to the overall height of the cone.

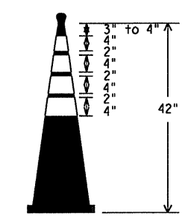

EDGELINE CHANNELIZER

1. This device is intended only for use in place of a vertical panel to channelize traffic by indicating the edge of the travel lane. It is not intended to be used in transitions or tapers.
2. This device shall not be used to separate lanes of traffic (opposing or otherwise) or warn of objects.
3. This device is based on a 42 inch, two-piece cone with an alternate striping pattern: four 4 inch retroreflective bands, with an approximate 2 inch gap between bands. The color of the band should correspond to the color of the edgeline (yellow for left edgeline, white for right edgeline) for which the device is substituted or for which it supplements. The reflectorized bands shall be retroreflective Type C encapsulated bead (High Specific Intensity) conforming to Departmental Material Specification DMS-8300, unless otherwise noted.
4. The base must weigh a minimum of 30 lbs.

TRAFFIC CONTROL FOR MATERIAL STOCKPILES

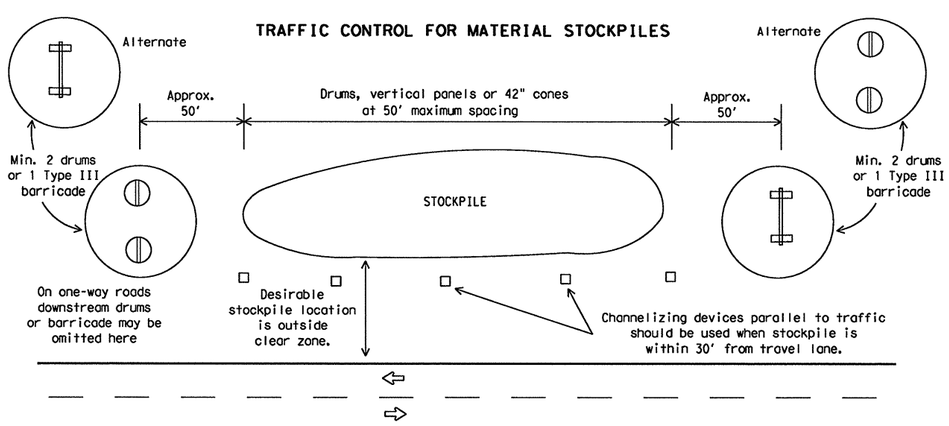

Texas Department of Transportation
Traffic Operations Division

BARRICADE AND CONSTRUCTION CHANNELIZING DEVICES STANDARD

10 of 12

BC(10)-07

© TxDOT 11-4-02	DN: TXDOT	CK: TXDOT	DW: TXDOT	CK: TXDOT	
9-07 REVISIONS	CONT	SECT	JOB	HIGHWAY	
	0091	04	055	SH 289	
	DIST		COUNTY		SHEET NO.
	DALLAS		COLLIN		114

DATE:
FILE:

1094

R-201104-01

DISCLAIMER: The use of this standard is governed by the "Texas Engineering Practice Act". No warranty of any kind is made by TxDOT for any purpose whatsoever. TxDOT assumes no responsibility for the conversion of this standard to other formats or for incorrect results or damages resulting from its use.

WORK ZONE PAVEMENT MARKINGS

GENERAL

1. The Contractor shall be responsible for maintaining work zone and existing pavement markings, in accordance with the standard specifications and special provisions, on all roadways open to traffic within the CSJ limits unless otherwise stated in the plans.
2. Color, patterns and dimensions shall be in conformance with the "Texas Manual on Uniform Traffic Control Devices" (TMUTCD).
3. Additional supplemental pavement marking details may be found in the plans or specifications.
4. Pavement markings shall be installed in accordance with the TMUTCD and as shown on the plans.
5. When short term markings are required on the plans, short term markings shall conform with the TMUTCD, the plans and details as shown on the Standard Plan Sheet WZ(STPM).
6. When standard pavement markings are not in place and the roadway is opened to traffic, DO NOT PASS signs shall be erected to mark the beginning of the sections where passing is prohibited and PASS WITH CARE signs at the beginning of sections where passing is permitted.
7. All work zone pavement markings shall be installed in accordance with Item 662, "Work Zone Pavement Markings."

RAISED PAVEMENT MARKERS

1. Raised pavement markers are to be placed according to the patterns on BC(12).
2. All raised pavement markers used for work zone markings shall meet the requirements of Item 672, "RAISED PAVEMENT MARKERS" and Departmental Material Specification DMS-4200 or DMS-4300.

PREFABRICATED PAVEMENT MARKINGS

1. Removable prefabricated pavement markings shall meet the requirements of DMS-8241.
2. Non-removable prefabricated pavement markings (foil back) shall meet the requirements of DMS-8240.

MAINTAINING WORK ZONE PAVEMENT MARKINGS

1. The Contractor will be responsible for maintaining work zone pavement markings within the work limits.
2. Work zone pavement markings shall be inspected in accordance with the frequency and reporting requirements of work zone traffic control device inspections as required by Form 599.
3. The markings should provide a visible reference for a minimum distance of 300 feet during normal daylight hours and 160 feet when illuminated by automobile low-beam headlights at night, unless sight distance is restricted by roadway geometrics.
4. Markings failing to meet this criteria within the first 30 days after placement shall be replaced at the expense of the Contractor as per Specification Item 662.

REMOVAL OF PAVEMENT MARKINGS

1. Pavement markings that are no longer applicable, could create confusion or direct a motorist toward or into the closed portion of the roadway, shall be removed or obliterated before the roadway is opened to traffic.
2. The above shall not apply to detours in place for less than two weeks, where flaggers and/or sufficient channelizing devices are used in lieu of markings to outline the detour route.
3. Pavement markings shall be removed to the fullest extent possible, so as not to leave a discernable marking. This shall be by any method approved by TxDOT Specification Item 677 for "Eliminating Existing Pavement Markings and Markers".
4. The removal of pavement markings may require resurfacing or seal coating portions of the roadway.
5. Subject to the approval of the Engineer, any method that proves to be successful on a particular type pavement may be used.
6. Blast cleaning may be used but will not be required unless specifically shown in the plans.
7. Over-painting of the markings SHALL NOT BE permitted.
8. Removal of raised pavement markers shall be as directed by the Engineer.
9. Removal of existing pavement markings and markers will be paid for directly in accordance with Item 677, "ELIMINATING EXISTING PAVEMENT MARKINGS AND MARKERS," unless otherwise stated in the plans.
10. Black-out marking tape may be used to cover conflicting existing markings for periods less than two weeks when approved by the Engineer.

Temporary Flexible-Reflective Roadway Marker Tabs

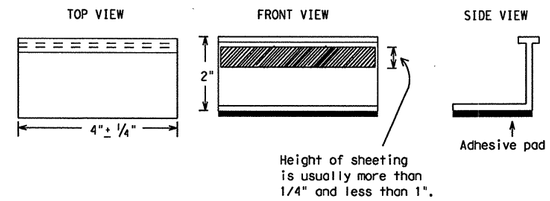

STAPLES OR NAILS SHALL NOT BE USED TO SECURE TEMPORARY FLEXIBLE-REFLECTIVE ROADWAY MARKER TABS TO THE PAVEMENT SURFACE

1. Temporary flexible-reflective roadway marker tabs used as guidemarks shall meet the requirements of DMS-8242.
2. Tabs detailed on this sheet are to be inspected and accepted by the Engineer or designated representative. Sampling and testing is not normally required, however at the option of the Engineer, either "A" or "B" below may be imposed to assure quality before placement on the roadway.
   A. Select five (5) or more tabs at random from each lot or shipment and submit to the Construction Division, Materials and Pavement Section to determine specification compliance.
   B. Select five (5) tabs and perform the following test. Affix five (5) tabs at 24 inch intervals on an asphaltic pavement in a straight line. Using a medium size passenger vehicle or pickup, run over the markers with the front and rear tires at a speed of 35 to 40 miles per hour, four (4) times in each direction. No more than one (1) out of the five (5) reflective surfaces shall be lost or displaced as a result of this test.
3. Small design variances may be noted between tab manufacturers.
4. See Standard Sheet WZ(STPM) for tab placement on new pavements. See Standard Sheet TCP(7-1) for tab placement on seal coat work.

Raised Pavement Markers used as Guidemarks

1. Raised pavement markers used as guidemarks shall be from the approved product list, and meet the requirements of DMS-4200.
2. All temporary construction raised pavement markers provided on a project shall be of the same manufacturer.
3. Adhesive for guidemarks shall be bituminous material hot applied or butyl rubber pad for all surfaces, or thermoplastic for concrete surfaces.

Guidemarks shall be designated as:
YELLOW - (two amber reflective surfaces with yellow body).
WHITE - (one silver reflective surface with white body).

DEPARTMENTAL MATERIAL SPECIFICATIONS

PAVEMENT MARKERS (REFLECTORIZED)	DMS-4200
TRAFFIC BUTTONS	DMS-4300
EPOXY AND ADHESIVES	DMS-6100
BITUMINOUS ADHESIVE FOR PAVEMENT MARKERS	DMS-6130
PREFABRICATED PAVEMENT MARKINGS-PERMANENT	DMS-8240
PREFABRICATED PAVEMENT MARKINGS-REMOVABLE	DMS-8241
TEMPORARY FLEXIBLE-REFLECTIVE ROADWAY MARKER TABS	DMS-8242

A list of prequalified reflective raised pavement markers, non-reflective traffic buttons, roadway marker tabs and other pavement markings can be found at the Material Producer List web address shown on BC(1).

Texas Department of Transportation
Traffic Operations Division

BARRICADE AND CONSTRUCTION PAVEMENT MARKINGS STANDARD

BC(11)-07

© TxDOT February 1998

DN: TXDOT	CK: TXDOT	DW: TXDOT	CK: TXDOT
CONT	SECT	JOB	HIGHWAY
0091	04	055	SH 289
DIST		COUNTY	SHEET NO.
DALLAS		COLLIN	115

REVISIONS
2-98
1-02
11-02
9-07

DATE:
FILE: bc11098

DISCLAIMER: The use of this standard is governed by the "Texas Engineering Practice Act". No warranty of any kind is made by TxDOT for any purpose whatsoever. TxDOT assumes no responsibility for the conversion of this standard to other formats or for incorrect results or damages resulting from its use.

PAVEMENT MARKING PATTERNS

CENTER LINE & NO-PASSING ZONE BARRIER LINES FOR TWO-LANE, TWO-WAY HIGHWAYS

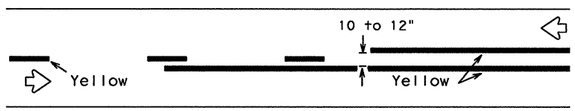

REFLECTORIZED PAVEMENT MARKINGS - PATTERN A

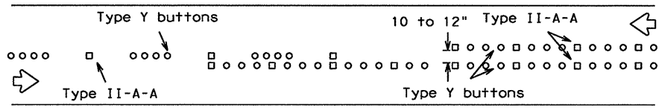

RAISED PAVEMENT MARKERS - PATTERN A

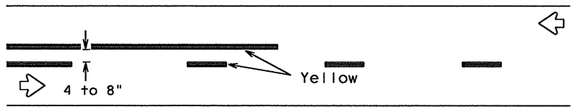

REFLECTORIZED PAVEMENT MARKINGS - PATTERN B

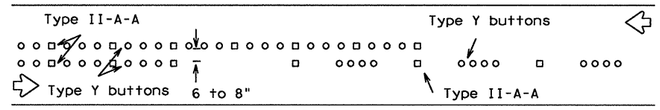

RAISED PAVEMENT MARKERS - PATTERN B

Pattern A is the TXDOT Standard, however Pattern B may be used if approved by the Engineer.
Prefabricated markings may be substituted for reflectorized pavement markings.

EDGE & LANE LINES FOR DIVIDED HIGHWAY

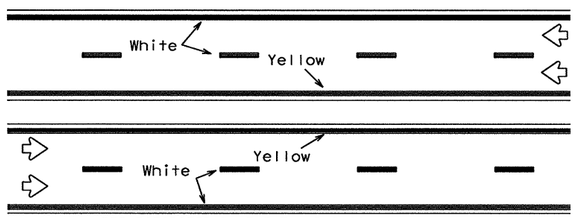

REFLECTORIZED PAVEMENT MARKINGS

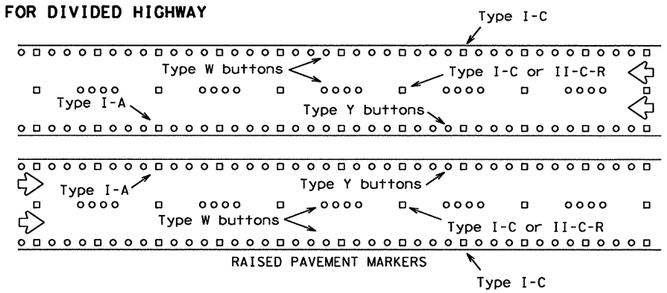

RAISED PAVEMENT MARKERS

Prefabricated markings may be substituted for reflectorized pavement markings.

LANE & CENTER LINES FOR MULTILANE UNDIVIDED HIGHWAYS

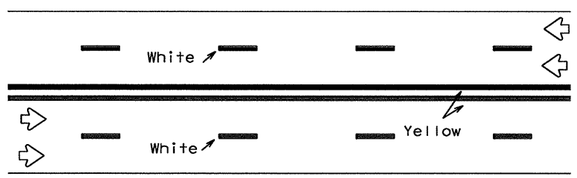

REFLECTORIZED PAVEMENT MARKINGS

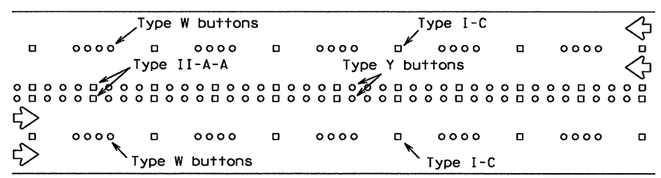

RAISED PAVEMENT MARKERS

Prefabricated markings may be substituted for reflectorized pavement markings.

TWO-WAY LEFT TURN LANE

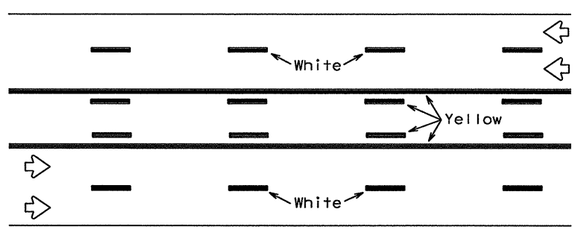

REFLECTORIZED PAVEMENT MARKINGS

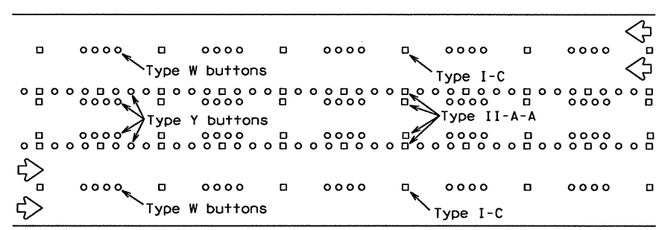

RAISED PAVEMENT MARKERS

Prefabricated markings may be substituted for reflectorized pavement markings.

STANDARD WORK ZONE PAVEMENT MARKINGS DETAILS

SOLID LINES

DOUBLE NO-PASSING LINE

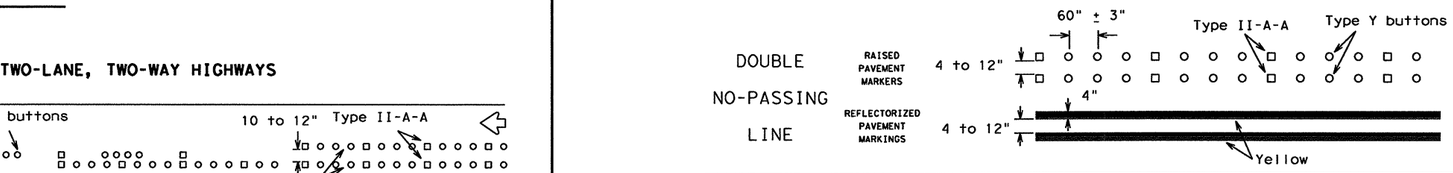

EDGE LINE OR SINGLE NO-PASSING LINE

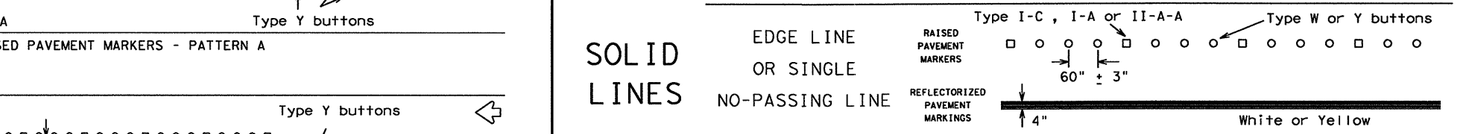

WIDE LINE

(FOR LEFT TURN CHANNELIZING LINE OR CHANNELIZING LINE USED TO DISCOURAGE LANE CHANGING.)

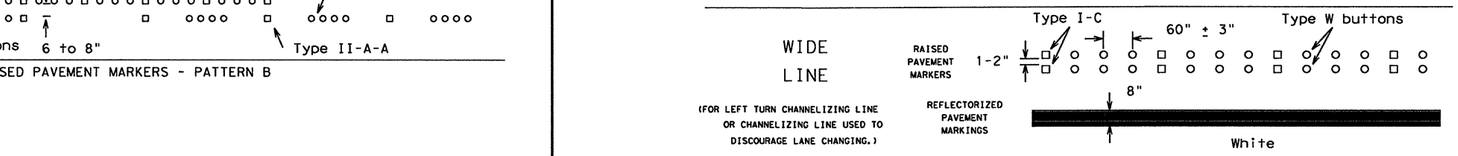

BROKEN LINE

(FOR CENTER LINE OR LANE LINE.)

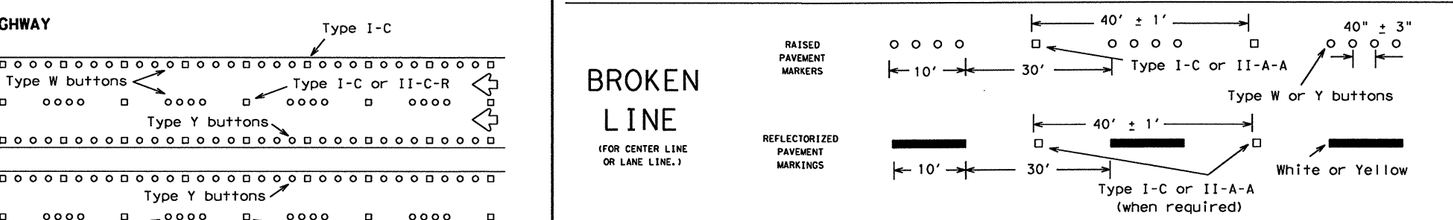

REMOVABLE MARKINGS WITH RAISED PAVEMENT MARKERS

If raised pavement markers are used to supplement REMOVABLE markings, the markers shall be applied to the top of the tape at the approximate mid length of tape used for broken lines or at 20 foot spacing for solid lines. This allows an easier removal of raised pavement markers and tape.

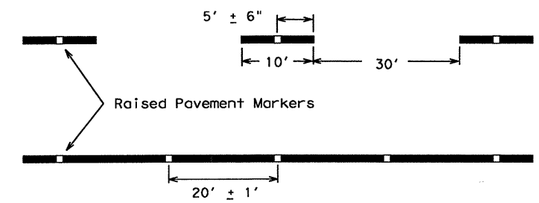

Centerline only - not to be used on edge lines

Raised pavement markers used as standard pavement markings shall be from the approved products list and meet the requirements of Item 672 "RAISED PAVEMENT MARKERS."

Texas Department of Transportation
Traffic Operations Division

BARRICADE AND CONSTRUCTION PAVEMENT MARKING PATTERNS STANDARD

12 of 12 BC(12)-07

© TxDOT February 1998

REVISIONS					
1-97	DN: TXDOT	CK: TXDOT	DW: TXDOT	CK: TXDOT	
2-98	CONT	SECT	JOB	HIGHWAY	
11-02	0091	04	055	SH 289	
9-07	DIST		COUNTY		SHEET NO.
	DALLAS		COLLIN		116

DATE:
FILE: bc12c1.dgn

DISCLAIMER: The use of this standard is governed by the "Texas Engineering Practice Act". No warranty of any kind is assumed by TxDOT for any purpose whatsoever. TxDOT assumes no responsibility for the conversion of this standard to other formats or for incorrect results or damages resulting from its use.

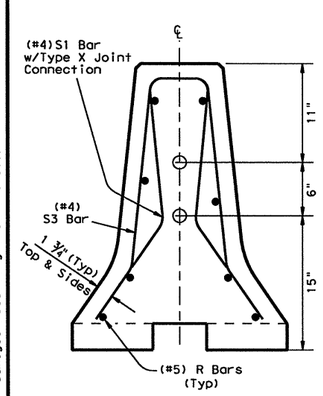

End View Precast Barrier

See sheet 2 of 3 for Joint connection Type X

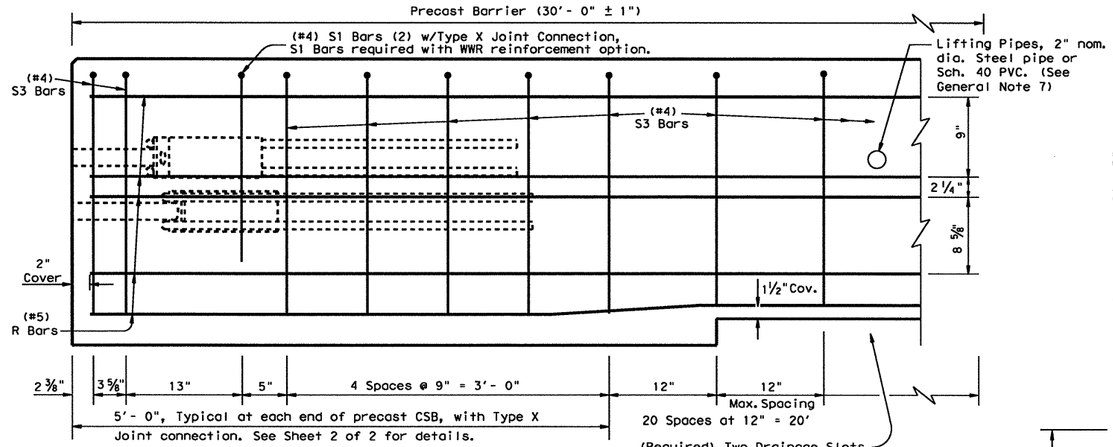

Reinforcement for Precast (CSB) Concrete Safety Barrier (Type 1)

Showing reinforcement for Joint Type X

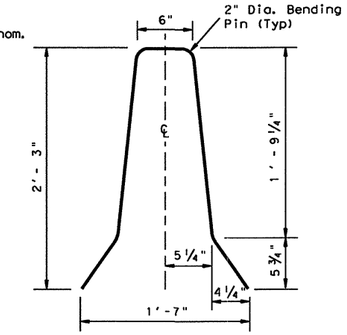

S3 Bar

#4 Bar

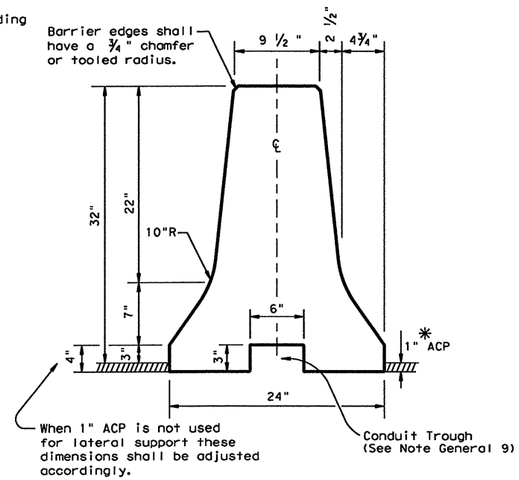

Concrete Safety Barrier

✳ When 1" ACP is "not" used as lateral support for permanent barrier placement. A permissible method of attaining the equivalent lateral support may be used, See CSB(6) sheet.

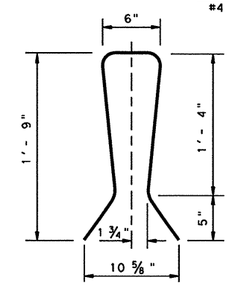

S1 Bar

#4 Bar (2)
(Joint Type X)

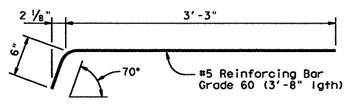

DEFORMED BAR ANCHOR DETAILS

Two (2) Bars required per assembly.
Eight (8) required per Joint.

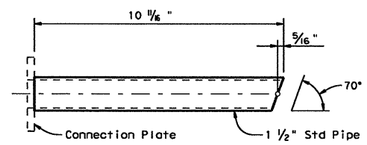

UPPER CONNECTION PIPE DETAILS

One (1) Steel Pipe required per Upper Assembly.
Two (2) required per Joint.

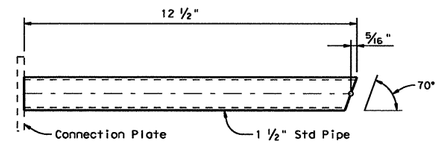

LOWER CONNECTION PIPE DETAILS

One (1) Steel Pipe required per Lower Assembly.
Two (2) required per Joint.

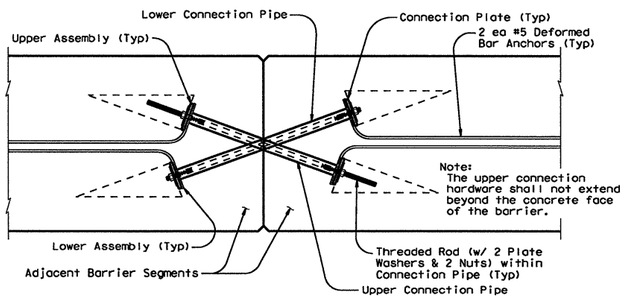

TYPE X JOINT INSTALLATION DETAIL

Barrier reinforcing and Type X Joint Leave-Out dimensions not shown for clarity.

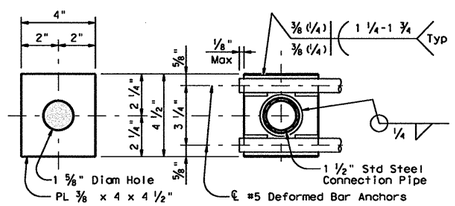

PLATE DIMENSIONS WELDING DETAILS

CONNECTION PLATE DETAILS

One (1) Plate required per assembly.
Four (4) required per Joint. All steel fittings for joint Type X shall be galvanized after fabrication in accordance with Item 445.

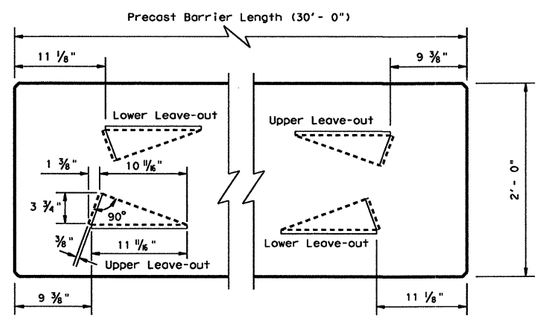

BARRIER PLAN AT END JOINTS

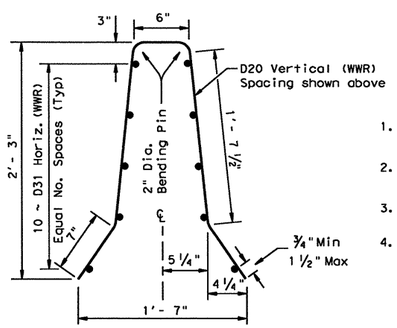

Welded Wire Reinforcement (WWR) Option for Bars R and S3

(WWR) General Notes

1. Deformed Welded Wire Reinforcement (WWR) shall conform to ASTM A497.
2. Welded wire cage may be cut or bent to accommodate the Type X joint connection and drainage slots, as directed by the Engineer.
3. All reinforcement shall comply with Item 440, "Reinforcing Steel."
4. Combinations of reinforcing steel and WWR will be permitted, as directed by the Engineer. The dimension from the end of the barrier section to the first wire shall not exceed 3".

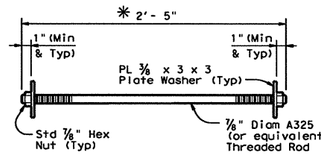

CONNECTION BOLT OR THREADED ROD DETAIL

Two (2) Threaded Rods (Or Equivalent Hex Hd. Bolts)
(w/ Two (2) PL 3/8 x 3 x 3 Plate Washers & Two (2) Std Hex Nuts) required per Joint.

✳ The connection hardware shall not extend beyond the concrete face of the barrier. Hex head bolts may be provided. The proper length of all hardware should be verified.

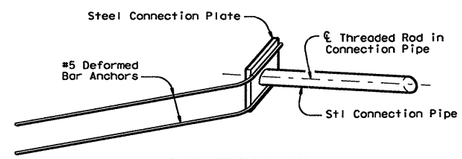

ISOMETRIC OF TYPICAL WELDED ASSEMBLY

Four (4) [2 Upper & 2 Lower] Assemblies required per Joint.

Weight of one Precast 30 ft. (CSB) segment = Approx. 6.5 Tons or 440 lbs per ft.

GENERAL NOTES

1. Concrete shall be Class H with a minimum compressive strength of 3,600 psi.
2. Where used, rebar reinforcement shall be Grade 60 and conform to ASTM A615.
3. Precast barrier length shall be 30 ft. unless otherwise specified on the plans.
4. All precast barrier edges shall have a 3/4" chamfer or tooled radius.
5. All concrete, reinforcement, joint connection systems, grout etc. as shown, are considered as part of the barrier payment.
6. All steel assemblies for joint shall be galvanized after fabrication in accordance with Item 445, "Galvanizing."
7. Regardless of the method of handling, barrier lifting points shall be approx. 7.5 feet from the ends of the barrier. Lifting devices and attachments to barrier sections shall be approved by the Engineer.
8. Surface finishing and grouting (where required) shall be two parts sand one part cement with enough water to make the mixture plastic. Grouting shall be done in a manner that will assure a smooth surface. Surface finishing shall be considered subsidiary to the various bid items involved.
9. Conduit trough when required shall be shown elsewhere on the plans, or as directed by the Engineer.

SHEET 1 OF 2

Texas Department of Transportation
Design Division Standard

CONCRETE SAFETY BARRIER (F-SHAPE)

PRECAST BARRIER (TYPE 1)

CSB(1)-10

FILE: csb110.dgn	DN: TxDOT	CK: AM	DW: BD	CK:
©TxDOT December 2010	CONT	SECT	JOB	HIGHWAY
REVISIONS	0091	04	055	SH 289
	DIST		COUNTY	SHEET NO.
	18		COLLIN	117

DATE:
FILE:

R-201104-01

DISCLAIMER:
The use of this standard is governed by the "Texas Engineering Practice Act". No warranty of any kind is made by TxDOT for any purpose whatsoever. TxDOT assumes no responsibility for the conversion of this standard to other formats or for incorrect results or damages resulting from its use.

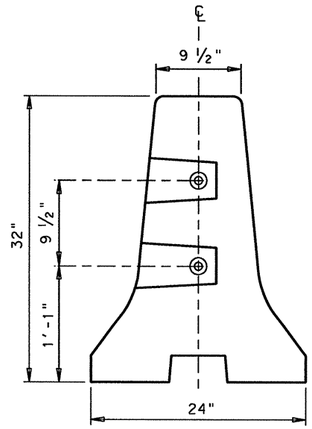

END VIEW (CSB) QUICK-BOLT

QUICK-BOLT POCKET LOCATIONS

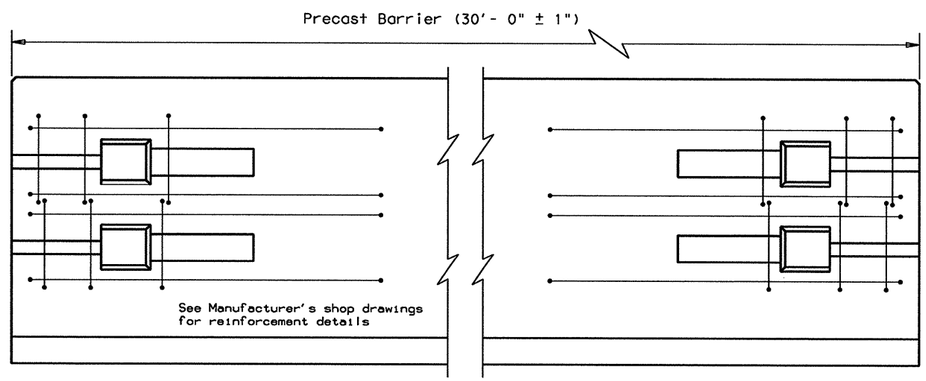

ELEVATION (CSB) QUICK-BOLT

See Manufacturer's shop drawing for additional details

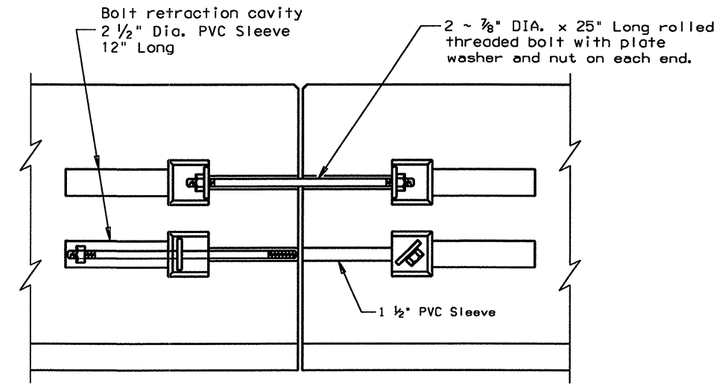

ELEVATION VIEW SHOWING JOINT CONNECTION

"QUICK-BOLT"

Joint Connection (Type Q)

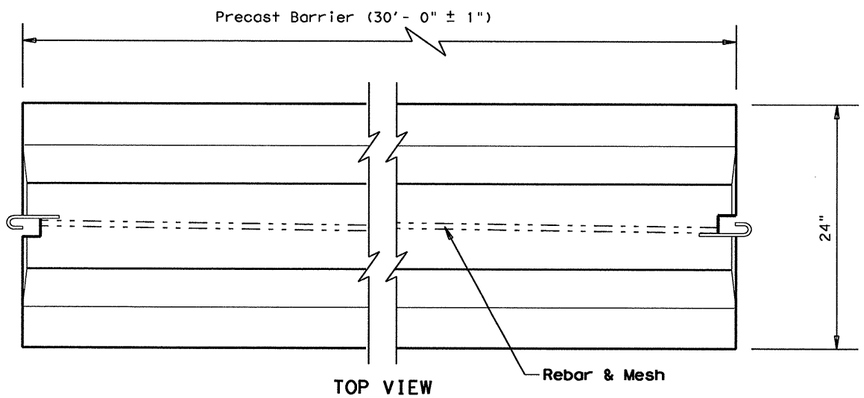

TOP VIEW

PRECAST (CSB) WITH J-J HOOKS

See Manufacturer's shop drawing for additional details

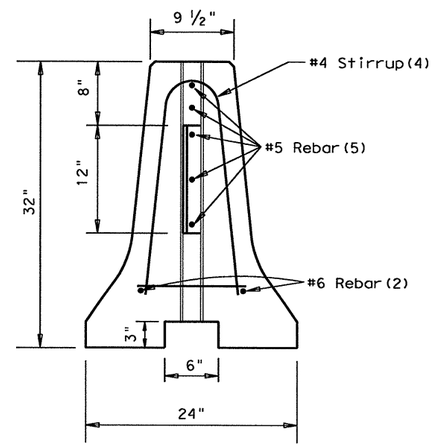

END VIEW

J-J HOOK CONNECTION

Joint Connection (Type J)

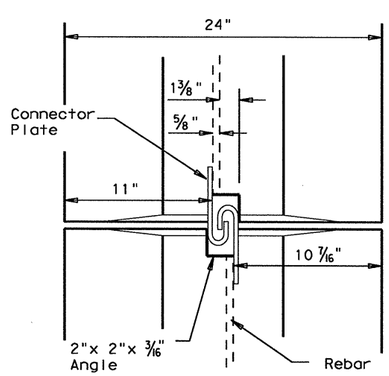

VIEW FROM ABOVE

J-J HOOK CONNECTION

Proprietary Joint Connections (CSB)

Two proprietary joint connections are acceptable as alternates to the (Type X) connection shown, here on. These joint connections types are:

J-J Hooks by Easi-Set Industries, (800)547-4045
Quick-Bolt by Bexar Concrete, (210)497-3773

If one of these connection systems are exclusively specified in the plans, prior approval for sole source use must be obtained. Details of the connection components and barrier reinforcement for these systems, will be shown on the manufacturer's shop drawing(s) furnished to the Engineer.

SHEET 2 OF 2

Texas Department of Transportation
Design Division Standard

CONCRETE SAFETY BARRIER (F-SHAPE)

PRECAST BARRIER (TYPE 1)

CSB(1)-10

FILE: csb110.dgn	DN: TxDOT	CK: AM	DW: BD	CK:
©TxDOT December 2010	CONT	SECT	JOB	HIGHWAY
REVISIONS	0091	04	055	SH 289
	DIST		COUNTY	SHEET NO.
	18		COLLIN	118

DATE:
FILE:

R-201104-01

DISCLAIMER:
The use of this standard is governed by the "Texas Engineering Practice Act". No warranty of any kind is made by TxDOT for any purpose whatsoever. TxDOT assumes no responsibility for the conversion of this standard to other formats or for incorrect results or damages resulting from its use.

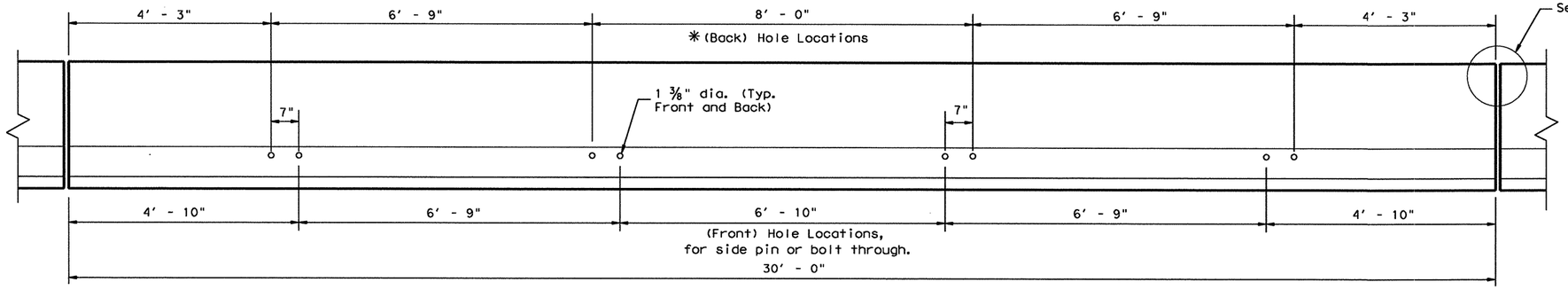

DETAIL 1

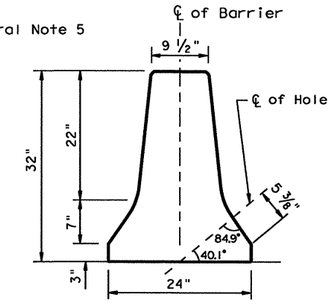

HOLE LOCATION DETAIL

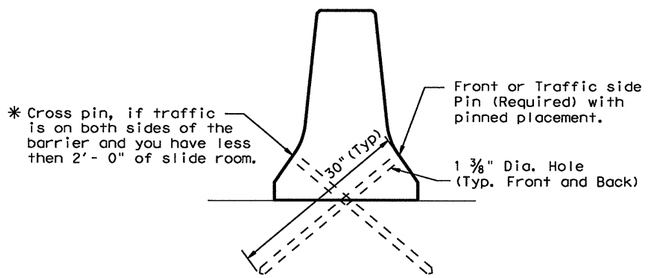

DETAIL 2

Placement on (ACP) Asphalt Concete Pavement or Treated Base Material (30" Pin required)

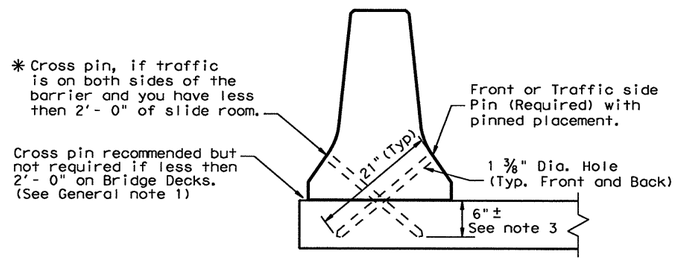

DETAIL 3

Bridge Deck or CRCP (21" pin required)

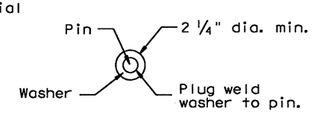

VIEW A-A

CORE DRILLING EXISTING BARRIER

Core drilling existing concrete barrier is permitted. Holes shall be drilled with coring or masonry drilling type equipment. Percussion (star) drilling shall not be used. A special drill bit (to cut through existing reinforcing) will likely be required. Spalls in the concrete exceeding 1/2" shall be patched.

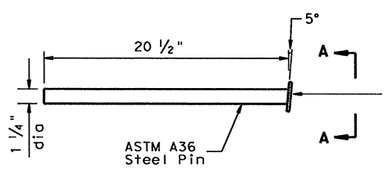

(21") PIN DETAIL

See Detail 3

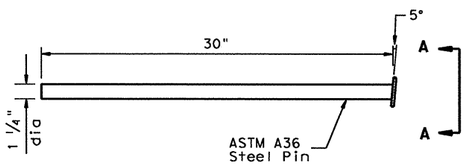

(30") PIN DETAIL

See Detail 2

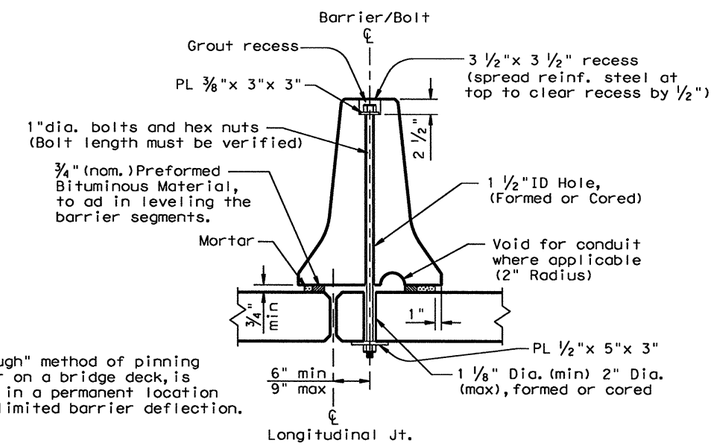

Note:
The "Bolt Through" method of pinning precast barrier on a bridge deck, is primarily used in a permanent location that requires limited barrier deflection.

PRECAST CSB (BOLT THROUGH) PLACEMENT OVER LONGITUDINAL EXPANSION JOINT

For bolt through locations, use the (Front) hole locations shown on Detail 1.

GENERAL NOTES

1. These details provide a method of laterally restraining precast concrete barrier to limit deflections under normally expected passenger vehicle impacts. These details are intended for use in work zones, primarily on bridge decks, or pavement where temporary barrier must be placed less then 2 ft. from the longitudinal edge of the deck or dropoff and parallel to the direction of travel. Other applications of these details are acceptable as directed by the Engineer.
2. Each precast concrete barrier section shall have a minimum of four or total of eight 1 3/8" ID, holes formed or cored through the barrier. The center lines of the holes are shown in the hole location detail. If rebar is encountered, the entry point may be shifted 2" plus or minus longitudinally along the barrier. The eight holes are spaced along the length of the barrier as shown in Detail 1.
3. The drilling of the travel surface is accomplished by placing the pre-drilled barrier section on the travel surface in the desired position. Then the hole is drilled with the bit passing though the hole in the barrier. The bit is to be inserted into the hole in the barrier so that the travel surface is drilled to a point which is slightly more than the pin length.
4. Note that steel washers have been welded to the top of the steel pins to aid in the removal of the pins, when the barrier is removed.
5. See CSB(1) standard sheets for reinforcement requirements and joint connection types.
6. The forming or coring of holes in the barrier, drilling of holes in bridge deck or pavement, fabrication and materials for the 1 1/4" pins, installation of pins, and any repair to the barrier shall be considered as subsidiary to the barrier bid items.
7. The barrier and travel surface will be repaired as directed by the Engineer in accordance with Item 429, "Concrete Structure Repair."
8. Provide galvanized bolts, nuts, and plate washers. All steel pins shall be galvanized after fabrication in accordance with Item 445, "Galvanizing."
9. Weight of barrier is approx. 440 lbs per foot.

Texas Department of Transportation
Design Division Standard

CONCRETE SAFETY BARRIER (F-SHAPE)

PRECAST BARRIER
(TYPE 1)
PINNED PLACEMENT

CSB(7)-10

FILE: csb710.dgn	DN: TxDOT	CK: AM	DW: BD		CK:
©TxDOT December 2010	CONT	SECT	JOB	HIGHWAY	
REVISIONS	0091	04	055	SH 289	
	DIST		COUNTY		SHEET NO.
	18		COLLIN		119

DATE:
FILE:

R-201104-01

DISCLAIMER: The use of this standard is governed by the "Texas Engineering Practice Act". No warranty of any kind is made by TxDOT for any purpose whatsoever. TxDOT assumes no responsibility for the conversion of this standard to other formats or for incorrect results or damages resulting from its use.

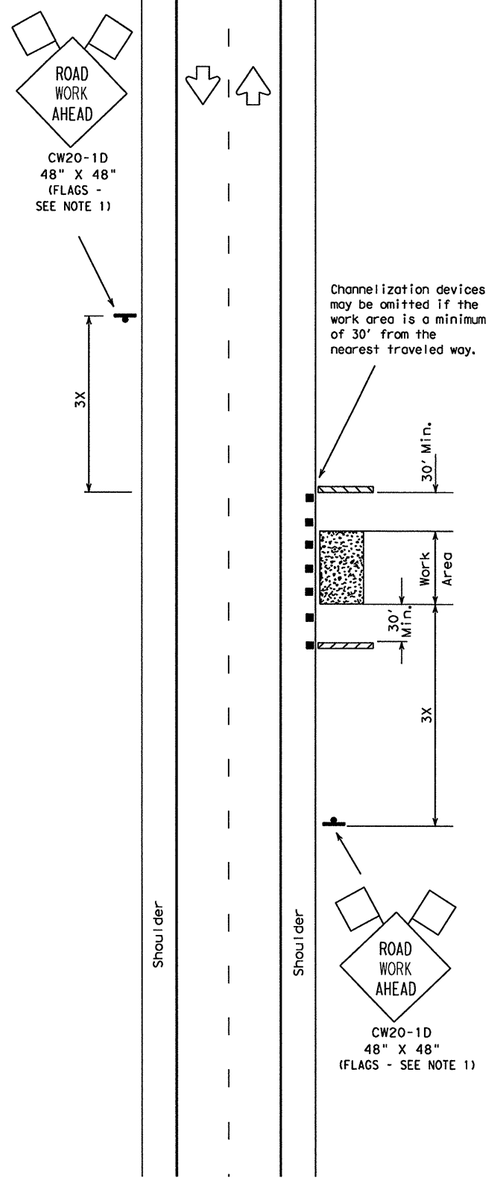

TCP (2-1a)

Work Area Near Shoulder

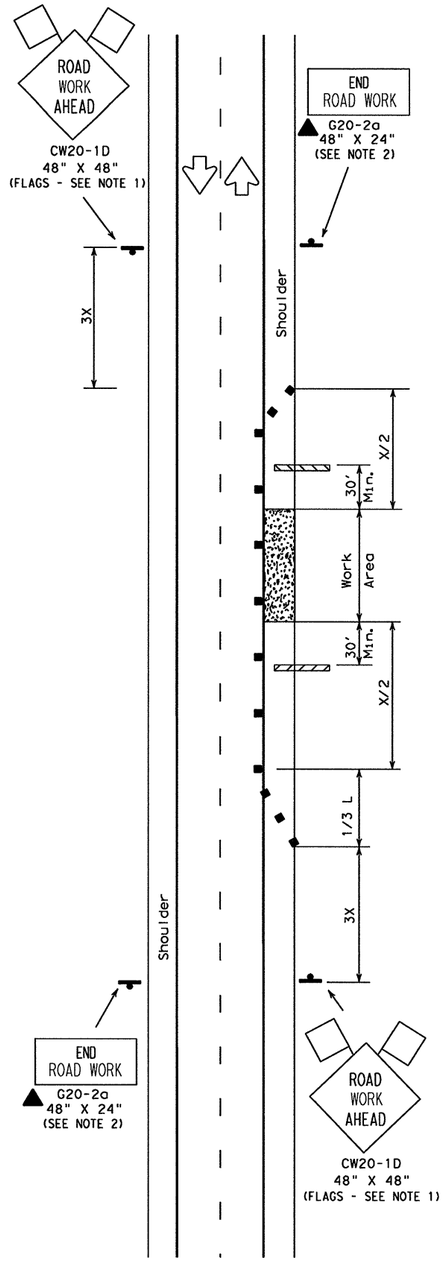

TCP (2-1b)

Work Area on Shoulder

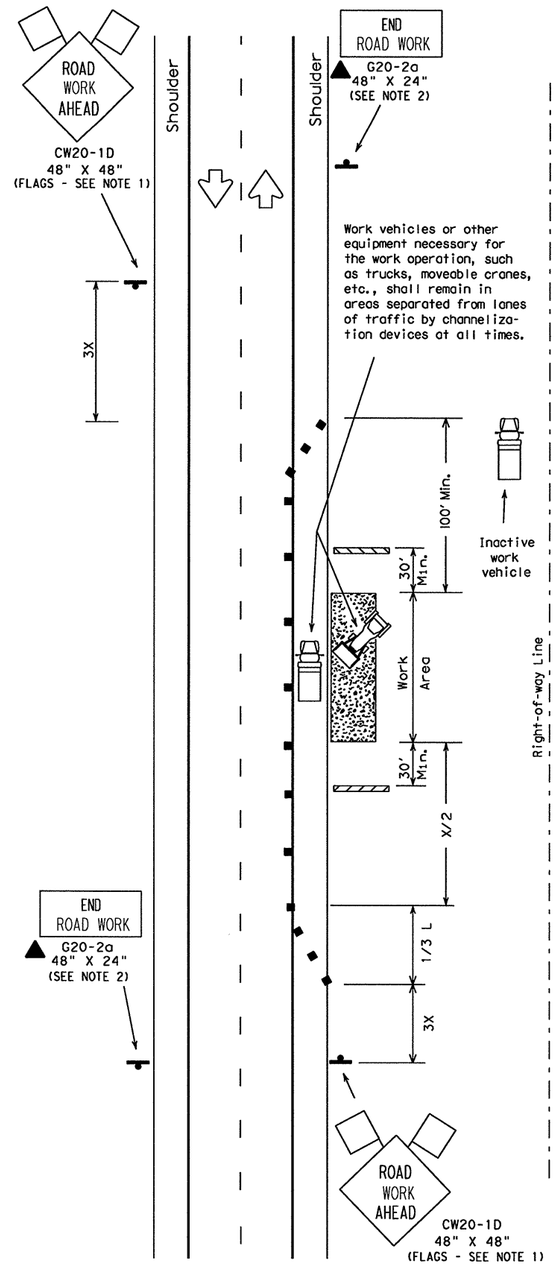

TCP (2-1c)

Work Vehicles on Shoulder

LEGEND

- Type III Barricade
- Channelizing Devices
- Flag
- Heavy Work Vehicle
- Truck Mounted Attenuator
- Trailer Mounted Flashing Arrow Panel
- Portable Changeable Message Sign
- Flagger
- Sign Post

Posted Speed ✱	Formula	Minimum Desirable Taper Lengths ✱✱ 10' Offset	11' Offset	12' Offset	Suggested Maximum Spacing of Device On a Taper	On a Tangent	Minimum Sign Spacing X Distance
30	$L = \frac{WS^2}{60}$	150'	165'	180'	30'	60'-75'	120'
35		205'	225'	245'	35'	70'-90'	160'
40		265'	295'	320'	40'	80'-100'	240'
45	L=WS	450'	495'	540'	45'	90'-110'	320'
50		500'	550'	600'	50'	100'-125'	400'
55		550'	605'	660'	55'	110'-140'	500'
60		600'	660'	720'	60'	120'-150'	✱600'
65		650'	715'	780'	65'	130'-165'	✱700'
70		700'	770'	840'	70'	140'-175'	✱800'

✱ Conventional Roads Only

✱✱ Taper lengths have been rounded off.
L=Length of Taper (FT.) W=Width of Offset (FT.) S=Posted Speed (MPH)

TYPICAL USAGE:				
MOBILE	SHORT DURATION	SHORT TERM STATIONARY	INTERMEDIATE TERM STATIONARY	LONG TERM STATIONARY
	✓	✓	✓	✓

GENERAL NOTES:

1. Unless otherwise stated in the plans, flags attached to signs are REQUIRED.
2. All traffic control devices illustrated are REQUIRED, except those denoted with the triangle symbol may be omitted when stated elsewhere in the plans.
3. Type III barricades are required on both sides of work area at all times. (See BC Standards for barricade details.)
4. Stockpiled material should be placed a minimum 30' from nearest traveled way.
5. Oh high speed facilities advance warning signs should be installed approximately 3X from the work area or from the beginning of a lane or shoulder taper. On low speed facilities the advance warning sign should be placed on the "X" minimum distance.

Only pre-qualified products shall be used. A list of compliant products and their sources may be obtained by writing or faxing:

Standards Engineer
Traffic Operations Division - TE
Texas Department of Transportation
125 East 11th Street
Austin, Texas 78701-2483
Phone (512) 416-3335
Fax (512) 416-3161
E-mail TRF-STANDARD@mailgw.dot.state.tx.us

Texas Department of Transportation
Traffic Operations Division

TRAFFIC CONTROL PLAN

TCP(2-1)-98

©TxDOT December 1985

REVISIONS
2-94
8-95
1-97
4-98

DN: TXDOT	CK: TXDOT	DW: TXDOT	CK: TXDOT
CONT	SECT	JOB	HIGHWAY
0091	04	055	SH 289
DIST		COUNTY	SHEET NO.
18		COLLIN	120

DATE:
FILE:

161

R-201104-01

DISCLAIMER: The use of this standard is governed by the "Texas Engineering Practice Act". No warranty of any kind is made by TxDOT for any purpose whatsoever. TxDOT assumes no responsibility for the conversion of this standard to other formats or for incorrect results or damages resulting from its use.

CHANNELIZING DEVICES FOR URBAN ROADWAY TYPE PROJECT

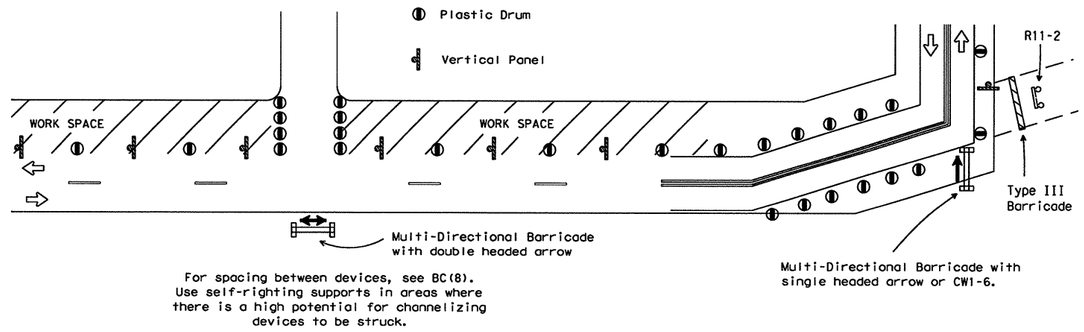

For spacing between devices, see BC(8). Use self-righting supports in areas where there is a high potential for channelizing devices to be struck.

MULTI-DIRECTIONAL BARRICADE

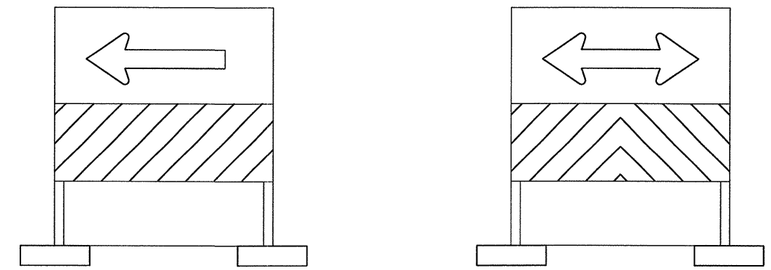

1. Multi-directional barricade shall not be used for lane closures.
2. May be used for sharp changes in alignment, or across roadway from stem of "T" intersection.
3. Typically used for Intermediate Term Stationary, Short Term Stationary or Short Duration work zone operations.
4. See the CWZTCD List for approved designs.

BARRIER DELINEATION WITH SAFETY GLARE FENCE

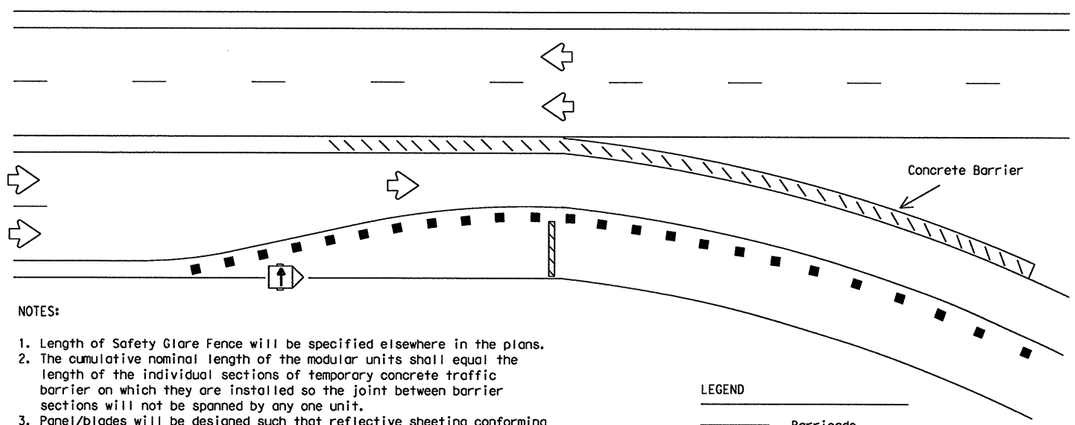

NOTES:

1. Length of Safety Glare Fence will be specified elsewhere in the plans.
2. The cumulative nominal length of the modular units shall equal the length of the individual sections of temporary concrete traffic barrier on which they are installed so the joint between barrier sections will not be spanned by any one unit.
3. Panel/blades will be designed such that reflective sheeting conforming with Departmental Material Specification DMS-8300, Flat Surface Reflective Sheeting, Type C (High Specific Intensity), minimum size of 2 inches by 12 inches can be attached to the edge of the panel/blade. The sheeting shall be attached to one panel/blade per section of concrete barrier not to exceed a spacing of 30 feet. Barrier reflectors are not necessary when panel/blades are installed.
4. Modular Glare Screens for head light barrier shall meet the requirements of DMS-8610.

LEGEND

- Barricade
- Channelizing devices
- Trailer mounted flashing arrow panel
- Safety glare fence

USAGE OF CW1-6, ECW1-6a AND CW1-8 SIGNS

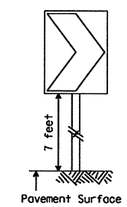

CW1-8

The CHEVRON sign (CW1-8) may be used to replace roadside delineation on curves or used in transitions or tapers.

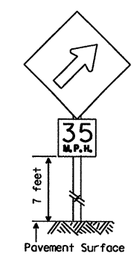

ECW1-6a

An UPWARD SLOPING ARROW sign (ECW1-6a) is intended to be used to indicate the beginning of a curve or transition. It should be preceded with an appropriate curve sign when needed, and should not be used throughout the curve or transition. Advisory speed plaque is optional.

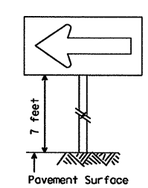

CW1-6

A LARGE ARROW sign (CW1-6) is intended to be used to give notice of a sharp change in alignment (turn) in the direction of travel. It should be preceded with an appropriate advance construction warning turn sign.

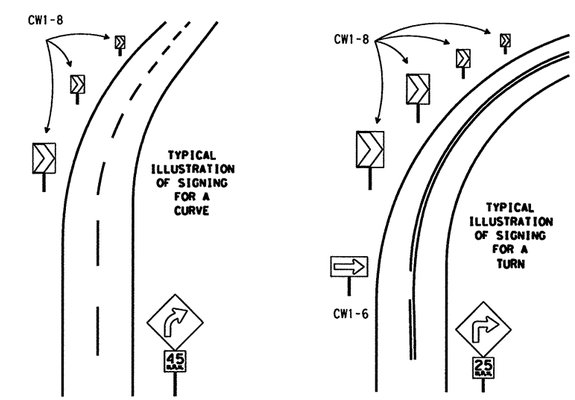

NOTES:

1. CW1-6, ECW1-6a & CW1-8 signs shall be mounted on fixed supports.
2. Chevrons, when used, shall be erected on the outside of a sharp curve or turn, or on the far side of an intersection. They shall be in line with and at right angles to approaching traffic. Spacing should be such that the motorist always has three in view, until the change in alignment eliminates its need.
3. For two-way traffic, use same arrangement of signs on outside of curve for each direction of travel.
4. Appropriate advance warning CURVE or TURN sign with Advisory Speed plaque should be used when needed.

Only pre-qualified products shall be used. A copy of the "Compliant Work Zone Traffic Control Devices List" (CWZTCD) describes pre-qualified products and their sources and may be obtained by contacting:

Standards Engineer
Traffic Operations Division - TE
Texas Department of Transportation
125 East 11th Street
Austin, Texas 78701-2483
Phone (512) 416-3120
Fax (512) 416-3299

Instructions to locate the "CWZTCD" on TxDOT website are:

Start at website - www.dot.state.tx.us
Click on "About TxDOT",
Click on "Organizational Chart",
Click on Traffic Operations Box,
Click on "Compliant Work Zone Traffic Control Devices",
Click on "View PDF".
This site is printable.

PREQUALIFICATION PROCEDURES ARE OBTAINED FROM:

CONSTRUCTION DIVISION-MATERIALS AND TESTS SECTION
TEXAS DEPARTMENT OF TRANSPORTATION (TxDOT)
125 EAST 11th STREET
AUSTIN, TX 78701-2483

DEPARTMENTAL MATERIAL SPECIFICATIONS

FLAT SURFACE REFLECTIVE SHEETING	DMS-8300
DELINEATORS AND OBJECT MARKERS	DMS-8600
MODULER GLARE SCREENS	DMS-8610

COLOR	USAGE	SIGN SHEETING
ORANGE	BACKGROUND	TYPE E (FLUORESCENT PRISMATIC)
WHITE	BACKGROUND	TYPE C (HIGH SPECIFIC INTENSITY)
BLACK	LEGEND & BORDERS	VINYL NON-REFLECTIVE SHEETING

REFER TO THE BC SHEETS FOR SHEETING REQUIREMENT ON CHANNELIZING DEVICES.

The five categories of work duration and their time at a location shall be:

A. Long-term stationary is work that occupies a location more than 3 days.

B. Intermediate-term stationary is work that occupies a location more than one daylight period up to 3 days, or nighttime work lasting more than 1 hour.

C. Short-term stationary is daytime work that occupies a location for more than 1 hour, but less than 12 hours.

D. Short duration is work that occupies a location up to 1 hour.

E. Mobile is work that moves intermittently or continuously.

Texas Department of Transportation
Traffic Operations Division

TRAFFIC CONTROL PLAN TYPICAL DETAILS

WZ(TD)-03

©TxDOT February 1998

REVISIONS	DN: TXDOT	CK: TXDOT	DW: TXDOT	CK: TXDOT
4-98	CONT	SECT	JOB	HIGHWAY
3-03	0091	04	055	SH 289
	DIST		COUNTY	SHEET NO.
	18		COLLIN	12

DATE:
FILE:

R-201104-01

DISCLAIMER: The use of this standard is governed by the "Texas Engineering Practice Act". No warranty of any kind is given or implied with respect to the accuracy, completeness, usefulness, or suitability for any purpose of this standard to other formats or for incorrect results or damages resulting from its use.

WORK ZONE SHORT TERM PAVEMENT MARKINGS DETAILS

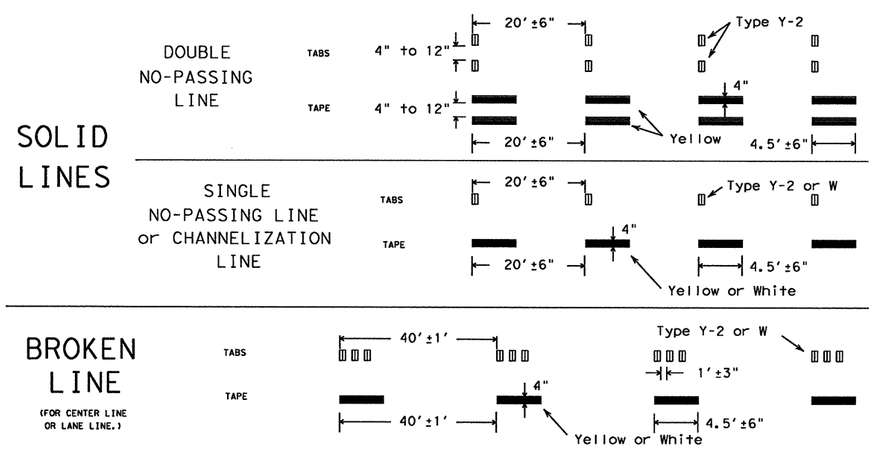

NOTES:

1. Short term pavement markings may be prefabricated markings (stick down tape) or temporary flexible-reflective roadway marker tabs unless otherwise specified elsewhere in plans.
2. Short term pavement markings shall NOT be used to simulate edge lines.
3. Dimensions indicated on this sheet are typical and approximate. Variations in size and height may occur between markers or devices made by manufacturers, by as much as 1/4 inch, unless otherwise noted.
4. Temporary flexible-reflective roadway marker tabs will require normal maintenance replacement when used on roadways with an ADT per lane of up to 7500 vehicles with no more than 10% truck mix. When roadways exceed these values, additional maintenance replacement of devices should be planned.
5. No segment of roadway open to traffic shall remain without permanent pavement markings for a period greater than 14 calendar days. The Contractor will be responsible for maintaining short term pavement markings until permanent pavement markings are in place. When the Contractor is responsible for placement of permanent pavement markings, no segment of roadway shall remain without permanent pavement markings for a period greater than 14 calendar days unless weather conditions prohibit placement. Permanent pavement markings shall be placed as soon as weather permits.
6. For two lane, two-way roadways, DO NOT PASS signs shall be erected to mark the beginning of sections where passing is prohibited and PASS WITH CARE signs shall be erected to mark the beginning of sections where passing is permitted. Signs shall be in accordance with the "Texas Manual on Uniform Traffic Control Devices" (TMUTCD) and may be used to indicate the limits of no-passing zones for up to 14 calendar days. Permanent pavement markings should then be placed.
7. For low volume two lane, two-way roadways of 4000 ADT or less, no-passing lines may be omitted when approved by the Engineer. DO NOT PASS and PASS WITH CARE signs shall be erected (see note 6).

TEMPORARY FLEXIBLE-REFLECTIVE ROADWAY MARKER TABS (TABS)

1. Temporary flexible-reflective roadway marker tabs detailed on this sheet will be designated Type Y-2 (two amber reflective surfaces with yellow body); Type Y (one amber reflective surface with yellow body); and Type W (one white or silver reflective surface with white body). Additional details may be found on BC(10).
2. Tabs shall meet requirements of Departmental Material Specification DMS-8242.
3. When dry, tabs shall be visible for a minimum distance of 200 feet during normal daylight hours and when illuminated by automobile low-beam head light at night, unless sight distance is restricted by roadway geometrics.
4. No two consecutive tabs nor four tabs per 1000 feet of line shall be missing or fail to meet the visual performance requirements of Note 3.

REMOVABLE - PREFABRICATED PAVEMENT MARKINGS

1. Removable prefabricated pavement markings shall meet the requirements of DMS-8241. A list of prequalified products can be found at the following web site:
   ftp://ftp.dot.state.tx.us/pub/txdot-info/gsd/pdf/pavemark.pdf

NON REMOVABLE - PREFABRICATED PAVEMENT MARKINGS

1. Non-removable prefabricated pavement markings (foil back) shall meet the requirements of DMS-8240 or the TXDOT Purchase Specification No. 550-74-89. A list of prequalified products and a copy of the TXDOT Purchase Specifications can be found at web sites:
   ftp://ftp.dot.state.tx.us/pub/txdot-info/gsd/pdf/pavement.pdf
   ftp://ftp.dot.state.tx.us/pub/txdot-info/gsd/pdf/tss/tss377.pdf

RAISED PAVEMENT MARKERS

1. All raised pavement markers used for work zone markings shall meet the requirements of Item 672, "RAISED PAVEMENT MARKERS" and Departmental Material Specification DMS-4200.
2. A list of prequalified reflective raised pavement markers can be found at the following web site:
   ftp://ftp.dot.state.tx.us/pub/txdot-info/gsd/pdf/dms4200preq.pdf

WORK ZONE SHORT TERM PAVEMENT MARKINGS PATTERNS

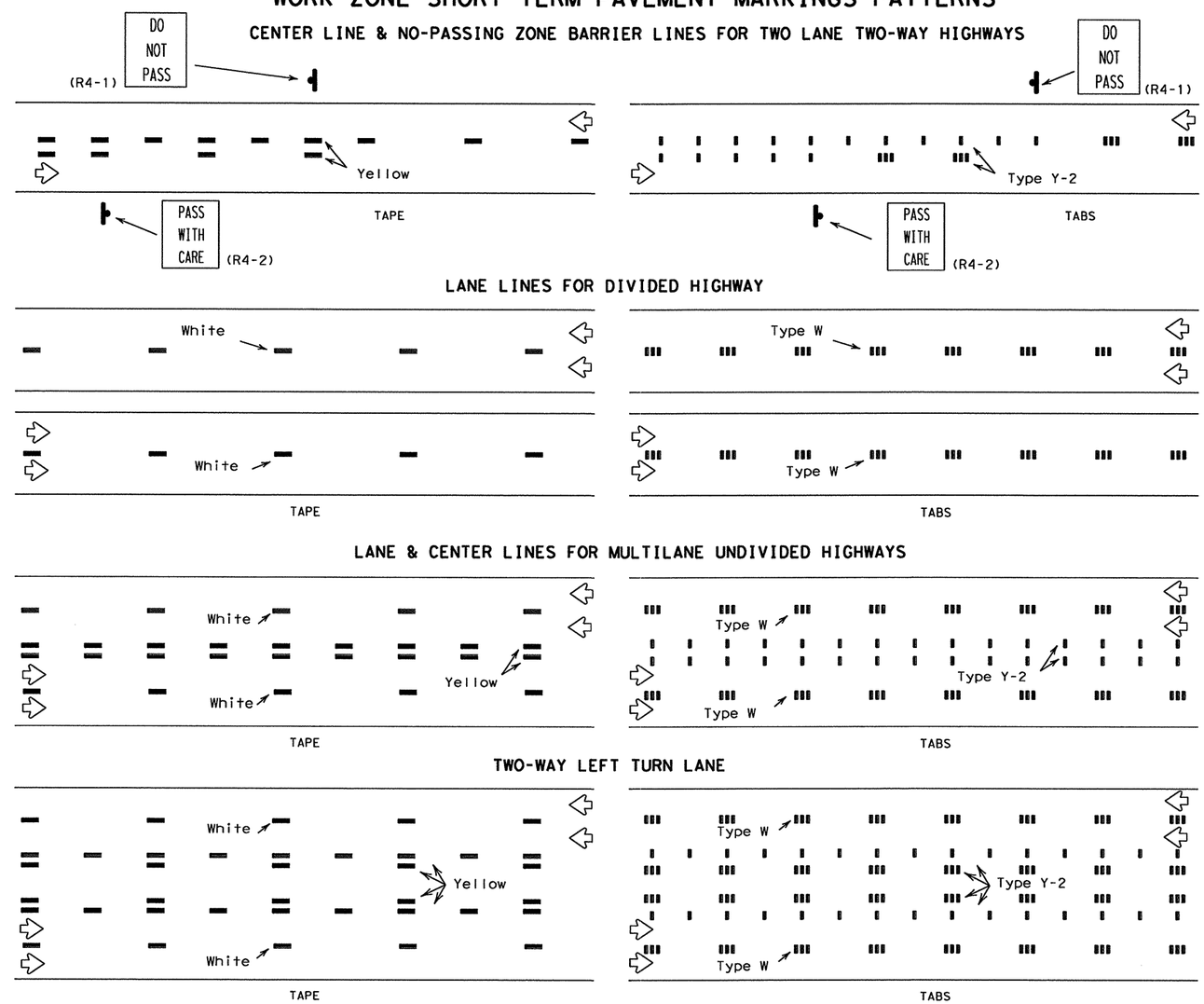

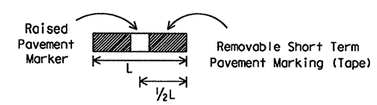

If raised pavement markers are used to supplement REMOVABLE short term markings, the markers shall be applied to the top of the tape at the approximate mid length of the tape. This allows an easier removal of raised markers and tape.

DEPARTMENT MATERIAL SPECIFICATIONS	
PREFABRICATED PAVEMENT MARKINGS-PERMANENT	DMS-8240
PREFABRICATED PAVEMENT MARKINGS-REMOVABLE	DMS-8241
TEMPORARY FLEXIBLE-REFLECTIVE ROADWAY MARKER TABS	DMS-8242
PAVEMENT MARKERS (REFLECTORIZED)	DMS-4200

Texas Department of Transportation
Traffic Operations Division

WORK ZONE SHORT TERM PAVEMENT MARKINGS

WZ(STPM)-03

©TxDOT April 1992

REVISIONS	DN: TXDOT	CK: TXDOT	DW: TXDOT	CK: TXDOT
1-97	CONT	SECT	JOB	HIGHWAY
3-03	0091	04	055	SH 289
	DIST		COUNTY	SHEET NO.
	18		COLLIN	122

DATE:
FILE:

R-201104-01

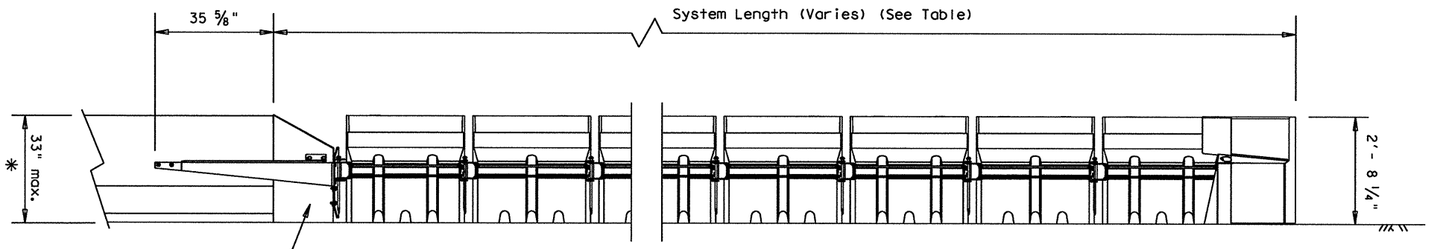

ELEVATION

See Manufacturer's Product Manual for Additional Details

* The ABSORB 350 is design be applied to barrier up to 33" tall. To accommodate taller barriers, a transitional barrier must be used. (See Manufacturer's requirments)

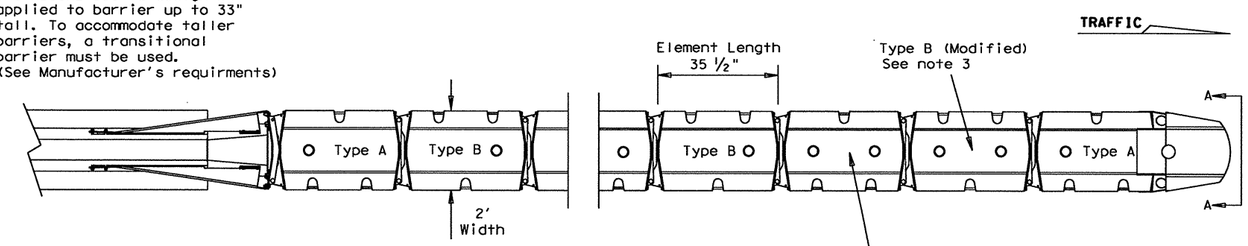

PLAN

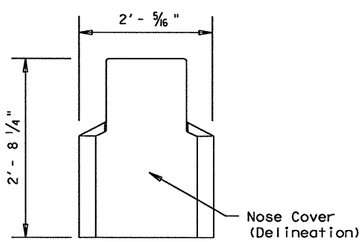

SECTION A-A

Nose Piece delineation orientation, is shown elsewhere on the plans.

DESIGN SPEED (mph)	NUMBER OF ELEMENTS	SYSTEM LENGTH (approx.)
45 OR LESS	5	20'- 0"
50	6	23'- 0"
55	7	26'- 0"
60	9	32'- 0"
65	10	35'- 0"
70	12	42'- 0"

The ABSORB 350 is only to be used in temporary (Work Zone) locations.

BACKUP SUPPORT
Steel Backup (Attach to Concrete Barriers, Precast or Cast-in-Place)

TRANSITION OPTIONS
Steel Backup to Vertical Wall
Steel Backup to Concrete Traffic Barriers

Backup and Transition types are shown elsewhere on the plans (i.e. Attenuator location details or in the general notes).

GENERAL NOTES

1. Refer to Installation manual and configuration chart for specific system assembly and element orientation. For additional information. Contact Interstate Steel Inc. at (432)263-3725.
2. The ABSORB 350 system is approved for use in temporary (Work Zone) locations. The ABSORB 350 is a water filled non-redirective, gating crash cushion that does not need to be attached to a foundation and can be installed on top of concrete, asphalt, or any surface capable of bearing the weight of the system.
3. Modified Type A and Type B elements require drilling of an additional 3" Dia. hole (as shown). See Manufacturers installation manual for details.
4. Maximum permissible cross-slope is 8%.
5. The installation area should be free from curbs, elevated objects, or depressions.
6. The ABSORB 350 should be approximately parallel with the barrier or ℄ of merging barrier.

BILL OF MATERIAL

PRODUCT CODE	QTY	DESCRIPTION
B010825	1	Replacement Nose Assembly
B010830	1	Nose Piece Cover
B000303	TBD	Type A Element Assembly
B000708	TBD	Type B Element Assembly
B000706	TBD	Replacement Element Type A
B000708	TBD	Replacement Element Type B
B000520	1	Replacement Transition to PCB
A010420	TBD	Pin Link Hinge Locking
B000520	1	Transition Adapter Assembly
B000209	TBD	Strap Left Adapter
B000207	TBD	Strap Right Adapter
B000611	TBD	Adapter Hinge Plate
A000521	TBD	Anchor Bolt (U-Bolt)
B000518	1	Tapered Adapter
B020421	TBD	I Beam Adapter Female
B020420	TBD	I Beam Adapter Male
C021212	1	Transition to Link

(TBD) = To Be Determined, depending on System Length. (See manufacturer's product manual)

Required Information
The use of the ABSORB 350 is restricted to a maximum barrier height of 33 inches.

Texas Department of Transportation
Design Division Standard

BARRIER SYSTEMS ABSORB 350 CRASH CUSHION (TEMPORARY, WORK ZONE)

ABSORB-10

FILE: absorb10.dgn	DN: TxDOT	CK: AM	DW: BD	CK:
©TxDOT September 2005	CONT	SECT	JOB	HIGHWAY
REVISIONS	0091	04	055	SH 289
	DIST		COUNTY	SHEET NO.
	18		COLLIN	123

DISCLAIMER:
The use of this standard is governed by the "Texas Engineering Practice Act". No warranty of any kind is made by TxDOT for any purpose whatsoever. TxDOT assumes no responsibility for the conversion of this standard to other formats or for incorrect results or damages resulting from its use.

DATE:
FILE:

R-201104-01

DISCLAIMER:
The use of this standard is governed by the "Texas Engineering Practice Act". No warranty of any kind is made by TxDOT for any purpose whatsoever. TxDOT assumes no responsibility for the conversion of this standard to other formats or for incorrect results or damages resulting from its use.

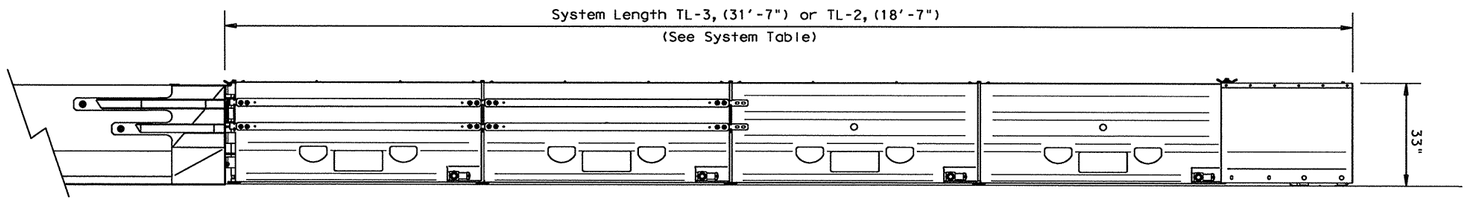

ELEVATION

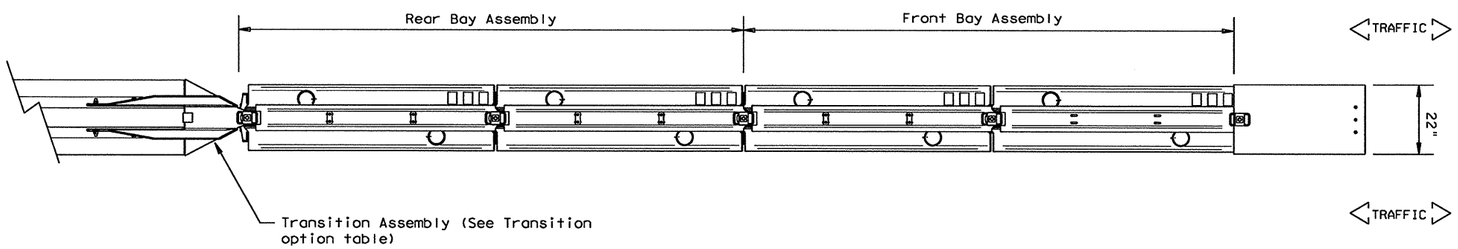

PLAN

Bi-Directional traffic flow shown.

GENERAL NOTES

1. For additional information contact: Energy Absorption Systems Inc. 35 E. Wacker Dr. Suite 1100 Chicago, IL. 60601. 1(888)323-6374.
2. Refer to Installation manual and configuration chart for specific system assembly and element orientation.
2. The ACZ 350 system is approved for use in temporary (Work Zone) locations. The ACZ 350 is a water filled non-redirective, gating crash cushion that does not need to be attached to a foundation and can be installed on top of concrete, asphalt, or any surface capable of bearing the weight of the system.
3. The ACZ 350 system consist of four major components, the transition assembly, rear bay assembly, front bay assembly, and nose assembly. See manufacturer's installation manual for details.
4. Maximum permissible cross-slope is 8% .
5. The installation area should be free from curbs, elevated objects, or depressions.
6. The ACZ 350 should be approximately parallel with the barrier or ℄ of merging barrier.

PARTS LIST

ITEM	PART NO.	DESCRIPTION	QTY
1	3595601-0000	FRONT BAY ASSY, ACZ-350, TL-3	1
2	3595601-0000	REAR BAY ASSY, ACZ-350, TL-3	1
* 3	3595608-*000	NOSE, ACZ-350, (See Below)	1
4	SEE TABLE	TRANSITION ASSEMBLY	1

*See details below for nose delineation

3595608-0000 NO STRIPING | 3595608-1000 TRAFFIC PASSES ON THE RIGHT | 3595608-2000 TRAFFIC PASSES ON THE LEFT | 3595608-3000 TRAFFIC PASSES ON BOTH SIDES

TRANSITION ASSEMBLY OPTIONS

PART NO.	BARRIER
3595616-0000	CTB SAFETY SHAPE (8" TOP)
3595618-0000	CSB F-SHAPE (9 1/2" TOP)
3595620-0000	SSCB SINGLE SLOPE (8" TOP)

TRANSITION OPTIONS

The ACZ 350 system is approved for use at bi-directional sites, additional hardware may be required. (See the Manufacurer's product manual)

Backup and Transition types are shown elsewhere on the plans (i.e. Attenuator location details or in the general notes).

ACZ-350 (NARROW) SYSTEM

TYPE	DESIGN SPEED	SYSTEM LENGTH
ACZ-350 (TL-2)	45 OR LESS	18'- 7"
ACZ-350 (TL-3)	50 OR GREATER	31'- 7"

Texas Department of Transportation
Design Division Standard

ENERGY ABSORPTION ACZ-350 CRASH CUSHION (TEMPORARY, WORK ZONE)

ACZ(350)-10A

FILE: acz10a.dgn	DN: TxDOT	CK: AM	DW: BD	CK:
©TxDOT March 2010	CONT	SECT	JOB	HIGHWAY
REVISIONS	0091	04	055	SH 289
	DIST	COUNTY		SHEET NO.
	18	COLLIN		124

DATE:
FILE:

R-201104-01

DISCLAIMER:
The use of this standard is governed by the "Texas Engineering Practice Act". No warranty of any kind is made by TxDOT for any purpose whatsoever. TxDOT assumes no responsibility for the conversion of this standard to other formats or for incorrect results or damages resulting from its use.

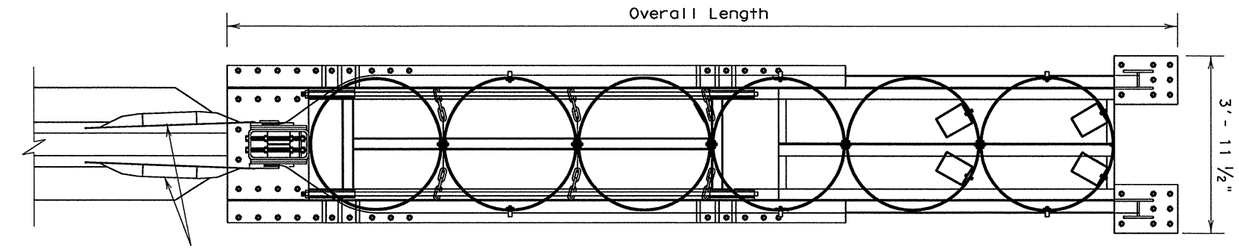

TYPICAL PLAN "B" (Self Contained Backup)

(Cylinder Cover not shown for clarity)

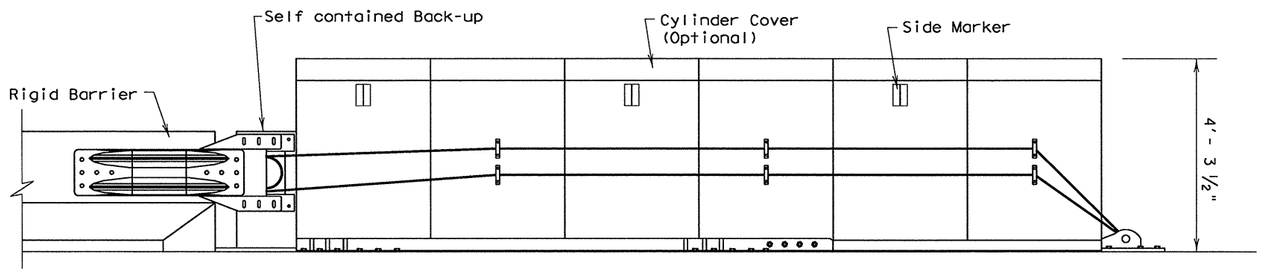

TYPICAL ELEVATION "B"

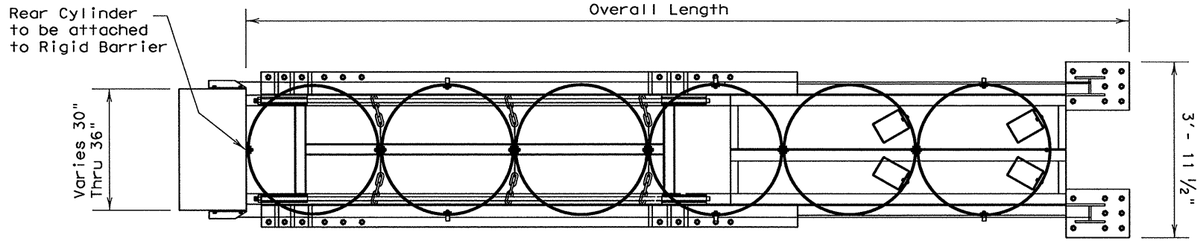

TYPICAL PLAN "S" (Side Mount, Concrete Backup Support)

(Cylinder Cover not shown for clarity)

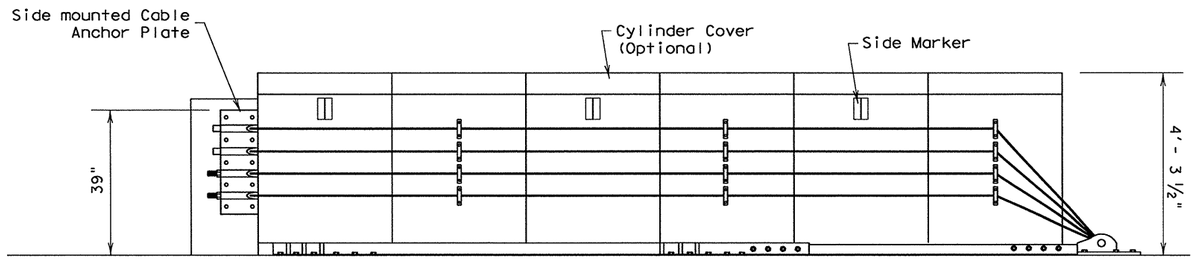

TYPICAL ELEVATION "S"

GENERAL NOTES

1. For additional information contact: Energy Absorption Systems Inc. 35 E. Wacker Dr. Suite 1100, Chicago, IL 60601. 1(888)323-6374.
2. The nose of the REACT 350 shall be clad with a plastic wrap with standard delineation adhered to the wrap and shall have a series of side marker reflectors on both sides of the unit. See site plan views for marker and plastic wrap color orientation.
3. All steel components to be hot dipped galvanized except stakes, drive spikes, threaded bolts in backup unit, and wedge fittings on cables.
4. The installation area should be free from curbs, elevated objects, or depressions. If the REACT system is to span expansion joints contact the manufacturer.
5. The REACT system should be approximately parallel with the barrier or ℄ of merging barriers. The maximum permissible cross-slope is 8%.

DESIGN DATA

	REACT 350.4-B	REACT 350.4-S	REACT 350.6-B	REACT 350.6-S	REACT 350.9-B	REACT 350.9-S	REACT 350 HS-B	REACT 350 HS-S
DESIGN SPEED	45 MPH	45 MPH	55 MPH	55 MPH	65 MPH	65 MPH	70 MPH	70 MPH
OVERALL LENGTH	15'-3"	13'-9"	21'-3"	19'-9"	30'-3"	28'-9"	30'-3"	28'-9"
OVERALL WEIGHT	2580 lb.	2340 lb.	3340 lb.	3100 lb.	4310 lb.	4070 lb.	4520 lb.	4280 lb.

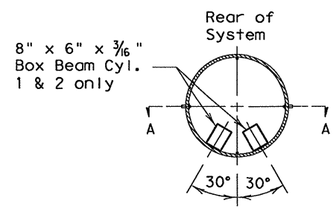

PLAN

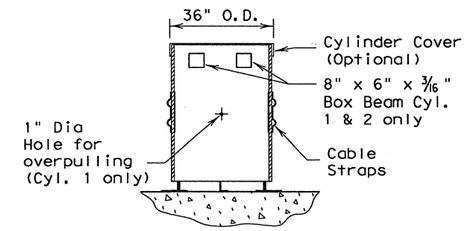

TYPICAL CYLINDER

SECTION A-A

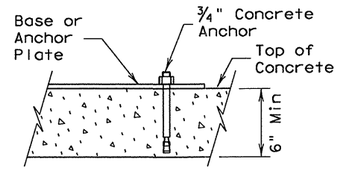

CONCRETE PAVEMENT DETAIL

NOTE: If separate pad is required for REACT, then the pad thickness shall be 8"

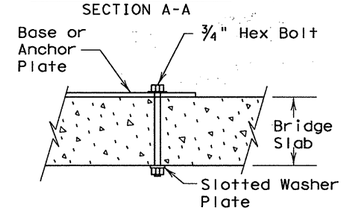

BRIDGE DECK DETAIL

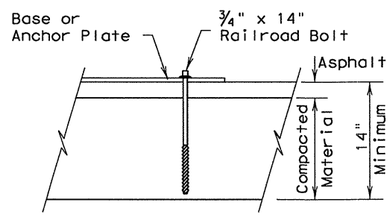

ASPHALT PAVEMENT DETAIL

Min. Asphalt thickness shall be 2"

SHEET 1 OF 2

Texas Department of Transportation
Design Division (Standard)

REUSABLE ENERGY ABSORBING CRASH TERMINAL (NARROW REACT 350)

REACT(N)-05

FILE: reactn05.dgn	DN: TxDOT	CK: AM	DW: BD	CK:
©TxDOT February 1998	CONT	SECT	JOB	HIGHWAY
REVISIONS	0091	04	055	SH 289
	DIST		COUNTY	SHEET NO.
	DAL		COLLIN	124A

DATE:
FILE:

R-201104-01

DISCLAIMER:
The use of this standard is governed by the "Texas Engineering Practice Act". No warranty of any kind is made by TxDOT for any purpose whatsoever. TxDOT assumes no responsibility for the conversion of this standard to other formats or for incorrect results or damages resulting from its use.

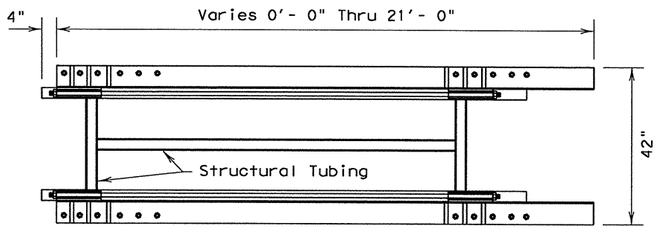

REAR SECTION OF BASE TRACK
(FOR UNITS WITHOUT SELF CONTAINED BACK-UP ONLY) "S"

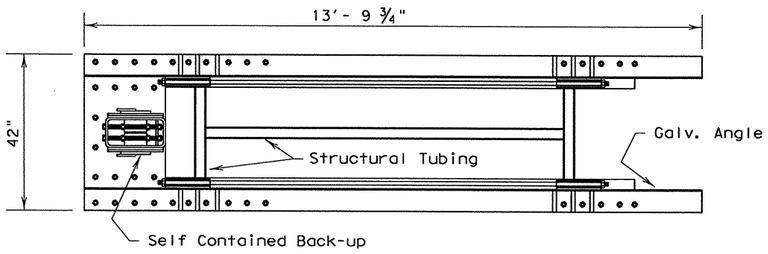

REAR SECTION OF BASE TRACK
(FOR UNITS WITH SELF CONTAINED BACK-UP ONLY) "B"

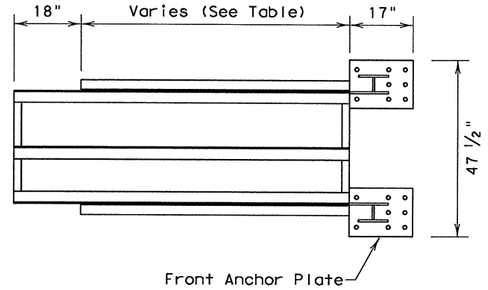

FRONT SECTION OF BASE TRACK

NUMBER OF CYLINDERS	FRONT BASE TRACK LENGTH
4	1'-5"
6	7'-5"
9	16'-5"
11	22'-5"

(The Front Section will vary depending on the size of the system)

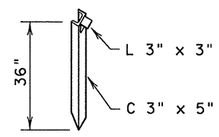

CHANNEL STAKE
(FOR USE W/ASPHALT PAVEMENT)

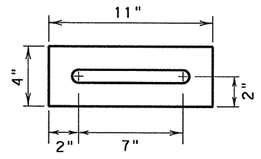

SLOTTED WASHER PLATE
(FOR BRIDGE DECK APPLICATIONS ONLY)

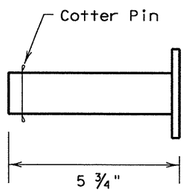

FRONT ANCHOR PIN DETAIL

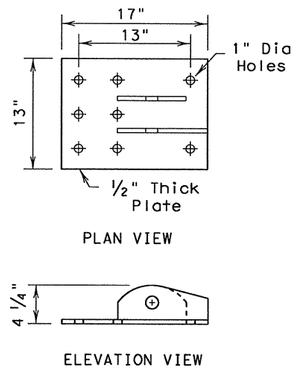

FRONT ANCHOR PLATE DETAIL

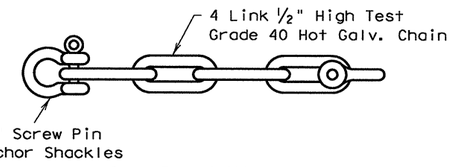

CHAIN DETAIL

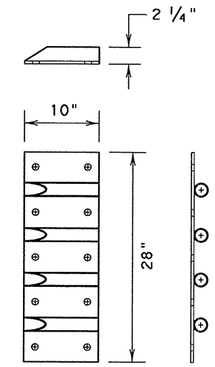

SIDE CABLE ANCHOR PLATE
(FOR UNITS WITHOUT A SELF CONTAINED BACK-UP ONLY)

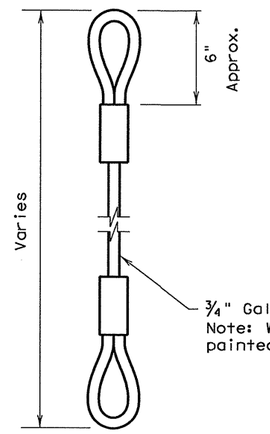

CABLE DETAIL
(FOR UNITS WITH SELF CONTAINED BACK-UP ONLY)

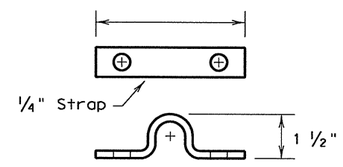

CABLE STRAP

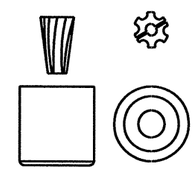

CABLE WEDGE

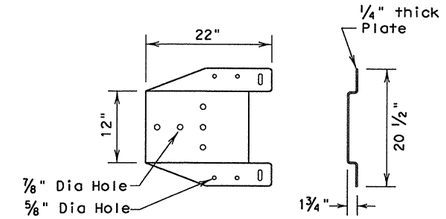

FOLDED TRANSITION PLATE
(For use in transition applications)

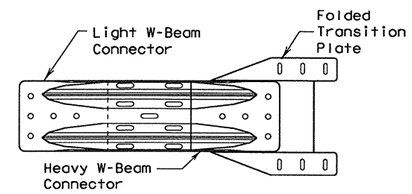

TRANSITION PLATE WITH W-BEAM CONNECTOR
(Connector overlap will vary per traffic direction - Reverse traffic shown)

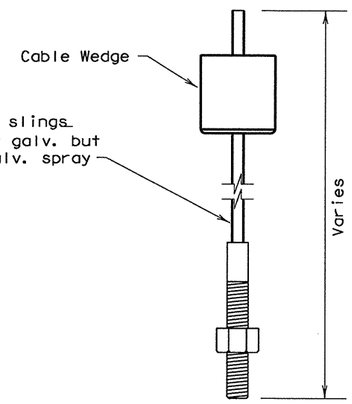

CABLE DETAIL
(FOR UNITS WITH SELF CONTAINED BACK-UP ONLY)

SHEET 2 OF 2

Texas Department of Transportation
Design Division Standard

REUSABLE ENERGY ABSORBING CRASH TERMINAL (NARROW REACT 350)

REACT(N)-05

FILE: reactn05.dgn	DN: TxDOT	CK: AM	DW: BD	CK:
© TxDOT February 1998	CONT	SECT	JOB	HIGHWAY
REVISIONS	0091	04	055	SH 289
	DIST		COUNTY	SHEET NO.
	DAL		COLLIN	124B

DATE:
FILE:

R-201104-01

DISCLAIMER:
The use of this standard is governed by the "Texas Engineering Practice Act". No warranty of any kind is made by TxDOT for any purpose whatsoever. TxDOT assumes no responsibility for the conversion of this standard to other formats or for incorrect results or damages resulting from its use.

System Length 25'-9" (FASTRACC)
System Length 21'-3" (TRACC)
System Length 14'-3" (SHORTRACC)

TRACC (3 Stage System) Shown

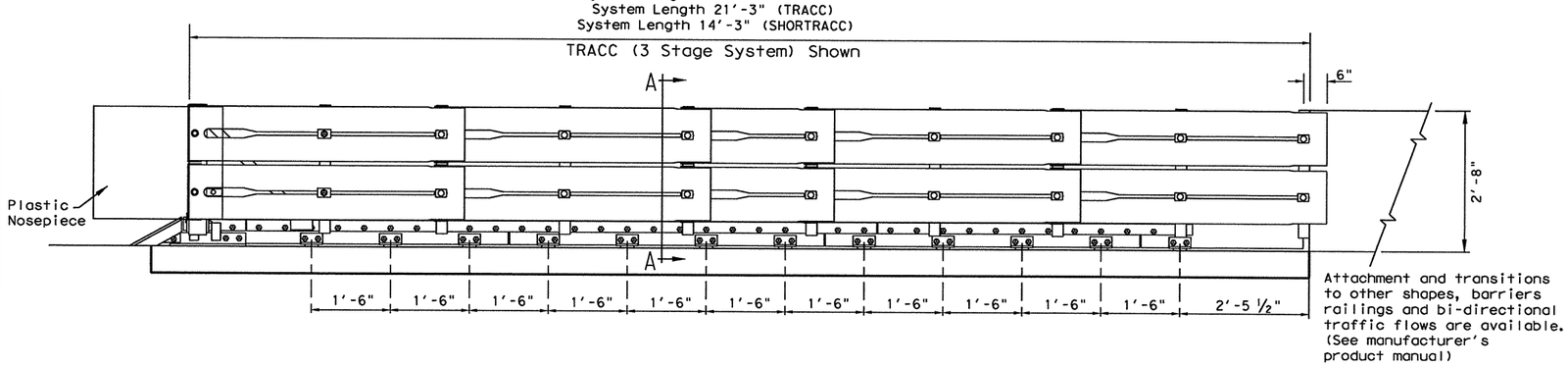

ELEVATION

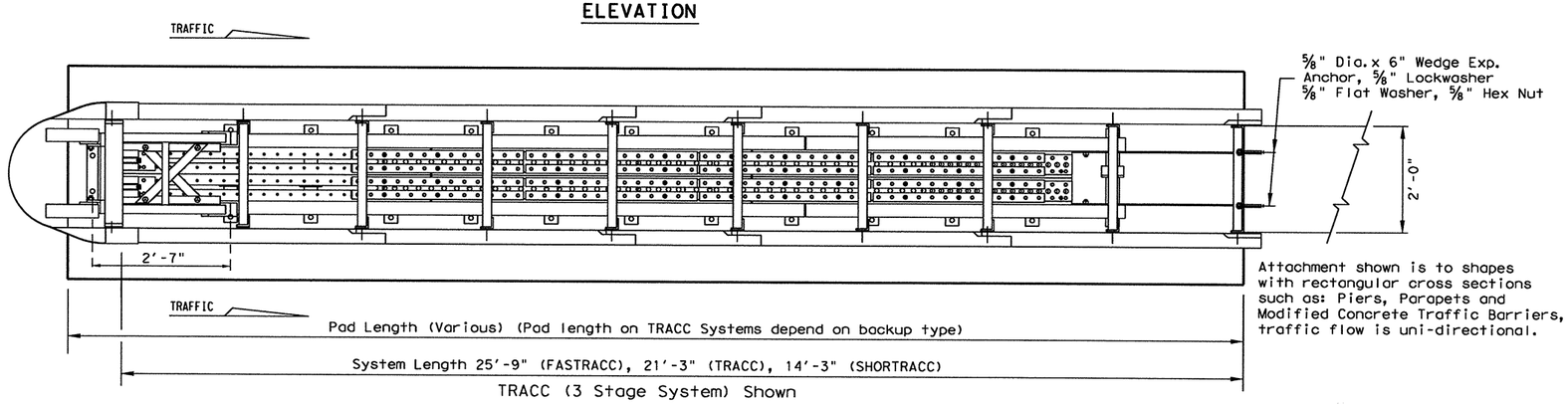

TRACC (3 Stage System) Shown

PLAN

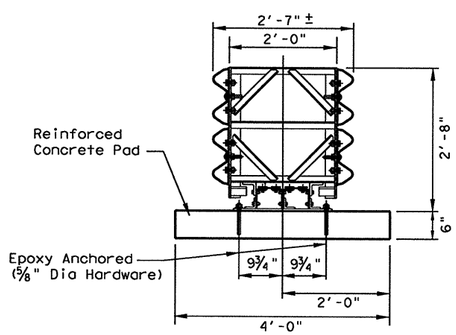

SECTION A-A

TYPE (NARROW)	DESIGN SPEED (mph)	SYSTEM LENGTH	PAD LENGTHS
FASTRACC (4 Stage System)	70	25'- 9"	26'- 8"
TRACC (3 Stage System)	50 or greater	21'- 3"	22'- 0" 23'- 0" 24'- 0"
SHORTRACC (2 Stage System)	45 or less	14'- 3"	15'- 0" 16'- 0" 17'- 0"

The Stage System refers to number of replaceable sled sections that could be replaced independently.

Concrete pad length on TRACC & SHORTRACC depends on backup type.

FOUNDATION OPTIONS
6" Reinforced Concrete
8" Unreinforced Concrete
3" Min. Asphalt over 3" Min. Concrete
6" Asphalt over 6" Compact Subbase
8" Minimum Asphalt

For steel placement in concrete foundations (See manufacturer's product manual)

BACKUP SUPPORT OPTIONS
Square Concrete Backup
Concrete Barrier (CTB) Backup
Single Slope Concrete Barrier (SSCB)
Guardrail Backup (Base-Plated Post)
Guardrail Backup (Driven Post)
TRANSITION OPTIONS
Vertical Wall
Modified (CTB) to Vertical Wall
Concrete Barrier (CTB)
Guardrail (W-Beam)
Guardrail (Thrie-Beam)

Backup and Transition types are shown elsewhere on the plans, (i.e. Attenuator location details or in the general notes).

For bi-directional transition panel details (See manufacturer's product manual)

GENERAL NOTES

1. For additional information contact, Trinity Highway Products at 1(800)527-6050.
2. For bi-directional traffic, appropriate transition panels will be required.
3. Details of components for the TRACC and backups and reinforcing details will be shown on the manufacturer's shop drawings furnished to the Engineer.
4. Concrete shall be class "S" with a minimum compressive strength of 4,000 p.s.i.
5. If the cross-slope varies more than 2% over the length of the system, the concrete pad will require leveling. Maximum permissible cross-slope is 8%.
6. The installation area should be free from curbs, elevated objects, or depressions.
7. The TRACC system should be approximately parallel with the barrier or ℄ of merging barriers.

BILL OF MATERIAL

PART #	FAST TRACC QTY	TRACC QTY	SHORT TRACC QTY	DESCRIPTION
25936A	1			FASTRACC Unit Assembly
25980A		1		TRACC Unit Assembly
25997A			1	SHORTRACC Unit Assembly
3310G	4	4	4	5/8" Lockwasher
4451G	4	4	4	5/8" Dia x 6" Wedge Exp. Anchor
6531B	1	1	1	Plastic Nosepiece
6668B	4	4	4	Reflective Sheeting
✱ ANCHOR HARDWARE (CONCRETE BASE)				
5204G	32	26	18	5/8"Dia x 7 1/2" All Thd. Rod
3310G	32	26	18	5/8" Lockwasher
3361G	32	26	18	5/8" Hex Nut
3300G	32	26	18	5/8" Flat Washer
5206B	3	3	2	TRACC Adhesive HIT HY150 Kit
✱ ANCHOR HARDWARE (ASPHALT BASE)				
6380G	32	26	18	5/8" Dia x 18" All Thd. Rod
3310G	32	26	18	5/8" Lockwasher
3361G	32	26	18	5/8" Hex Nut
3300G	32	26	18	5/8" Flat Washer
5206B	7	5	4	TRACC Adhesive HIT HY150 Kit

✱ See manufacturer's product manual

Texas Department of Transportation
Design Division Standard

TRINITY ATTENUATING CRASH CUSHION

TRACC (N) -05

FILE: traccn05.dgn	DN: TxDOT	CK: AM	DW: BD	CK:
© TxDOT February 2006	CONT	SECT	JOB	HIGHWAY
REVISIONS	0091	04	055	SH 289
	DIST		COUNTY	SHEET NO.
	DAL		COLLIN	124C

DATE:
FILE:

R-201104-01

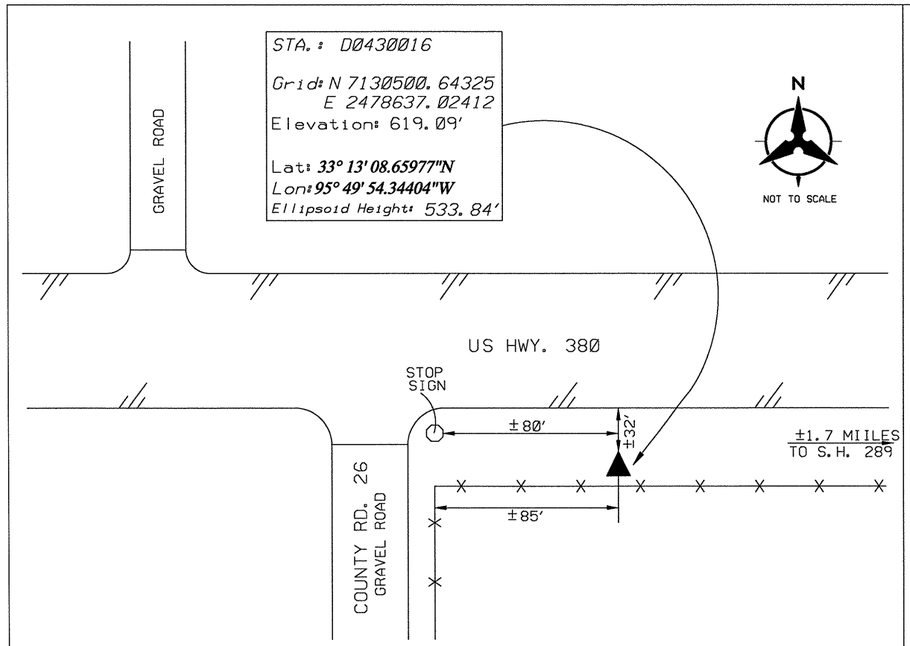

TxDOT 2" BRASS DISK SET IN CONCRETE STAMPED "TxDOT GPS D0430016" LOCATED APPROXIMATELY 80' EAST OF THE INTERSECTION OF S.H. 380 AND COUNTY ROAD 26.

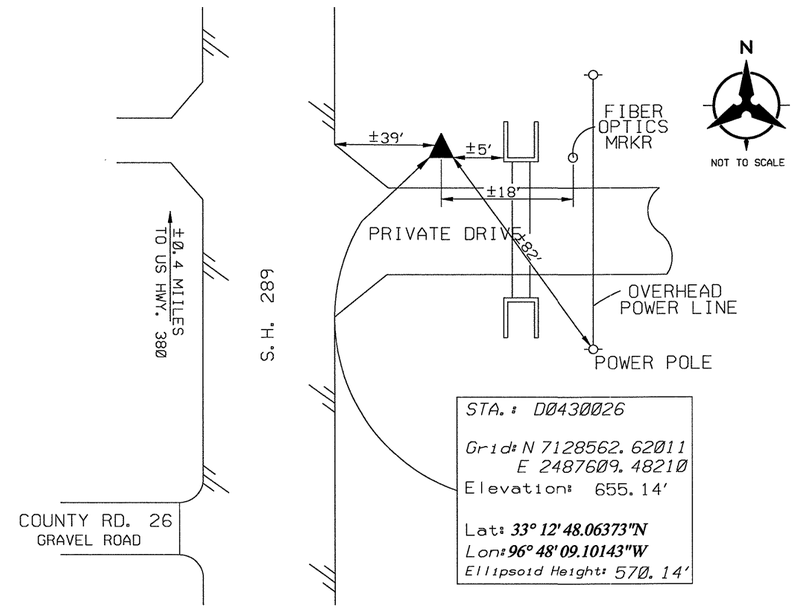

TxDOT 2" BRASS DISK SET IN CONCRETE STAMPED "TxDOT GPS D0430026" LOCATED APPROXIMATELY 250' NORTH OF THE INTERSECTION OF S.H. 289 AND COUNTY ROAD 26.

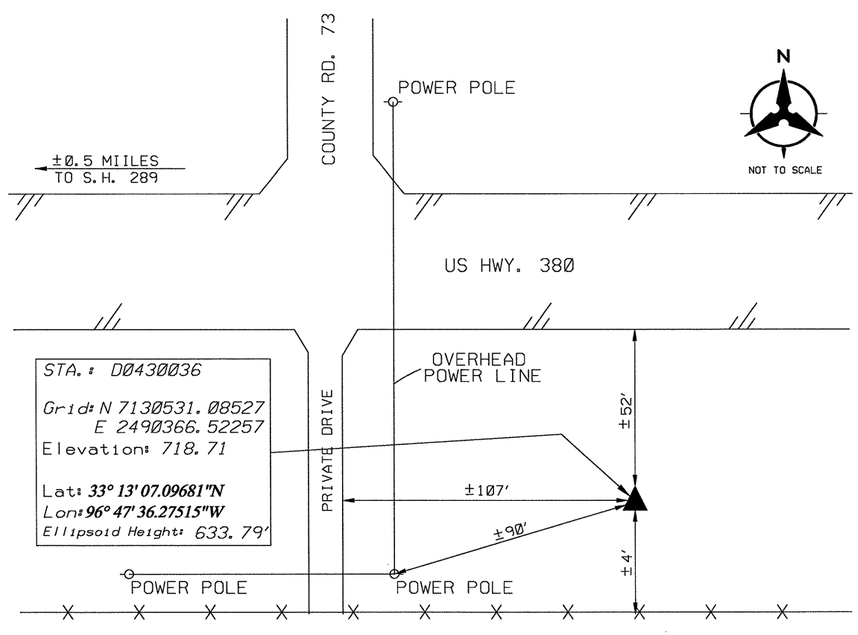

TxDOT 2" BRASS DISK SET IN CONCRETE STAMPED "TxDOT GPS D0430036" LOCATED APPROXIMATELY 107' EAST OF THE INTERSECTION OF S.H. 380 AND COUNTY ROAD 73.

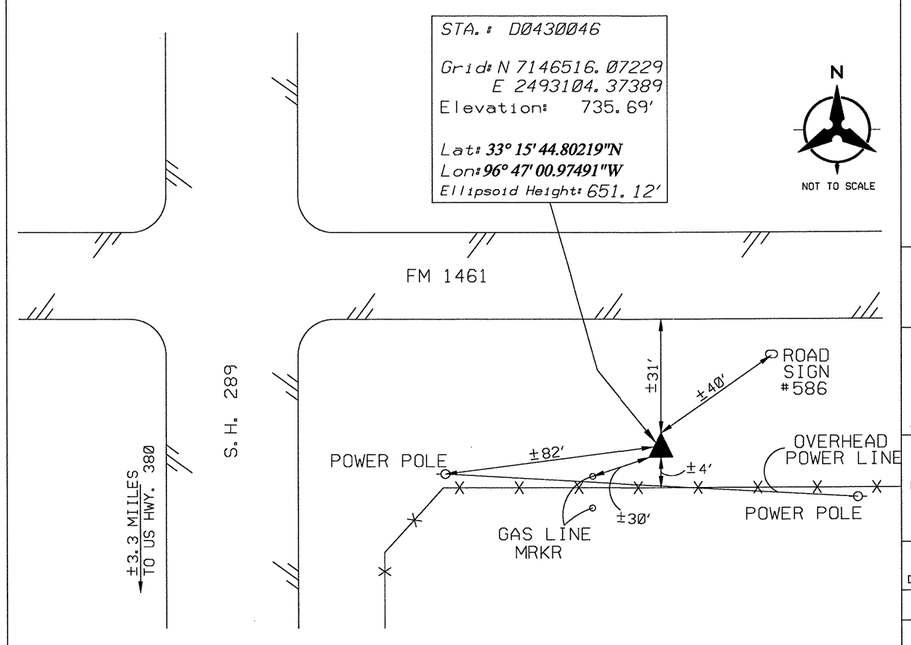

TxDOT 2" BRASS DISK SET IN CONCRETE STAMPED "TxDOT GPS D0430046" LOCATED APPROXIMATELY 150' EAST OF THE INTERSECTION OF S.H. 289 AND FM 1461.

NOTES:

1. COORDINATES AND DISTANCES ARE US SURVEY FEET. DISPLAYED IN STATE PLANE NORTH CENTRAL ZONE. GRID TO SURFACE SCALE FACTOR 1.00015271 0.

2. THE VERTICAL CONTROL WAS ESTABLISHED FROM A DIGITAL LEVEL LOOP HOLDING THE NEW ELEVATION OF MONUMENT A0430026 USING THE DALLAS VRS GPS NETWORK PER TxDOT INSTRUCTIONS.

BM ELEV = 661.102 FT [NAVD88 (1993)]

3. ALL HORIZONTAL CONTROL ON THIS PROJECT WAS ESTABLISHED BY STATIC GPS METHODS AND BASED ON THE FOLLOWING PRIMARY CONTROL POINTS AS PROVIDED BY NGS:

TXAR (ARLINGTON) [NAD83 (1993)]
TXDA (DALLAS) [NAD83 (1993)]
TXPA (PARIS) [NAD83 (1993)]
TXWF (WICHITA FALLS) [NAD83 (1993)]

Survey Date: 3/24/2006

Bohannan Huston
310 East I-30, Suite 100 Garland TX 75043 (972) 226-8181
ENGINEERING ▲ SPATIAL DATA ▲ ADVANCED TECHNOLOGIES

TEXAS DEPARTMENT OF TRANSPORTAION

S.H. 289
LIMITS: CR 26 TO COLLIN/GRAYSON CO. LINE
HORIZONTAL & VERTICAL CONTROL

FHWA TEXAS DIVISION	STATE PROJECT NO.		SHEET NO.
			125
STATE	DISTRICT	COUNTY	
TEXAS	18	COLLIN	
CONTROL	SECTION	JOB	HIGHWAY NO.
0091	04	050	S.H. 289

R-201104-01

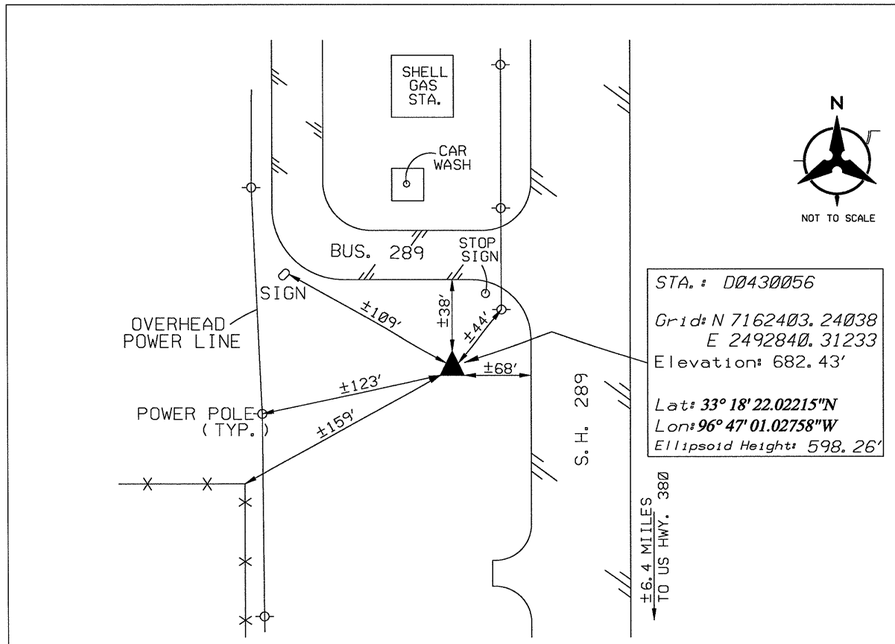

TxDOT 2" BRASS DISK SET IN CONCRETE STAMPED "TxDOT GPS D0430056" LOCATED APPROXIMATELY 40' SOUTH OF THE INTERSECTION OF S.H. 289 AND BUSINESS 289.

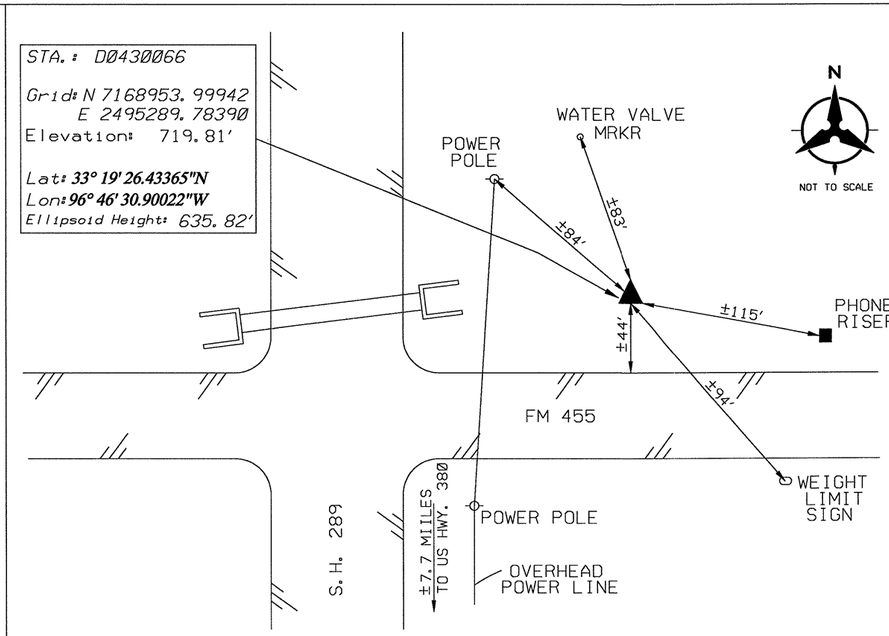

TxDOT 2" BRASS DISK SET IN CONCRETE STAMPED "TxDOT GPS D0430066" LOCATED APPROXIMATELY 50' NORTH OF THE INTERSECTION OF S.H. 289 AND FM 455.

NOTES:

1. COORDINATES AND DISTANCES ARE US SURVEY FEET. DISPLAYED IN STATE PLANE NORTH CENTRAL ZONE. GRID TO SURFACE SCALE FACTOR 1.000152710.

2. THE VERTICAL CONTROL WAS ESTABLISHED FROM A DIGITAL LEVEL LOOP HOLDING THE NEW ELEVATION OF MONUMENT A0430026 USING THE DALLAS VRS GPS NETWORK PER TxDOT INSTRUCTIONS.

BM ELEV = 661.102 FT [NAVD88 (1993)]

3. ALL HORIZONTAL CONTROL ON THIS PROJECT WAS ESTABLISHED BY STATIC GPS METHODS AND BASED ON THE FOLLOWING PRIMARY CONTROL POINTS AS PROVIDED BY NGS:

TXAR (ARLINGTON) [NAD83 (1993)]
TXDA (DALLAS) [NAD83 (1993)]
TXPA (PARIS) [NAD83 (1993)]
TXWF (WICHITA FALLS) [NAD83 (1993)]

4. MON D0430056 IS IN CSJ: 18-76-0091-04-050

5. MON D0430066,
MON D0430076,
MON D0430086 ARE IN CSJ: 18-76-0091-04-021.

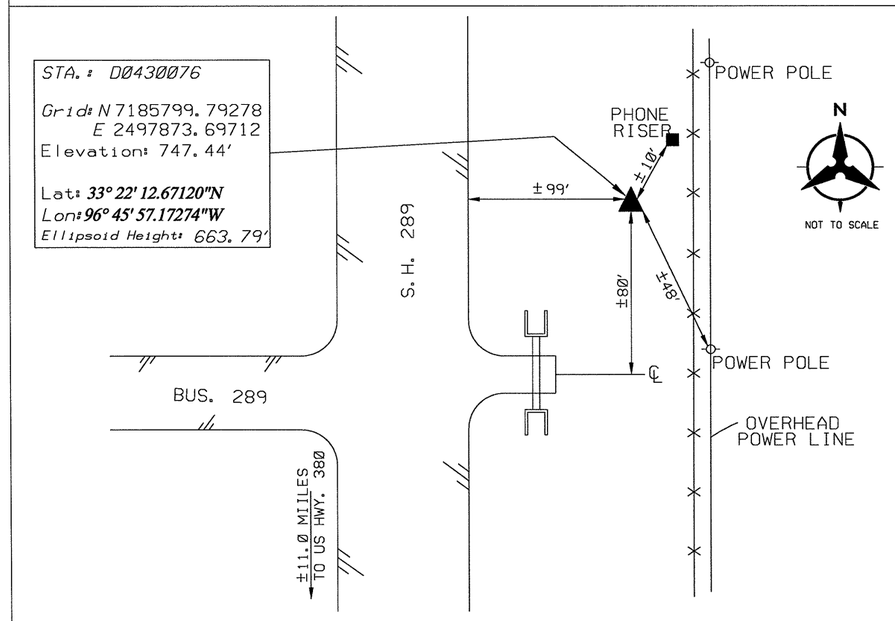

TxDOT 2" BRASS DISK SET IN CONCRETE STAMPED "TxDOT GPS D0430076" LOCATED APPROXIMATELY 80' NORTH OF THE INTERSECTION OF S.H. 289 AND BUSINESS 289.

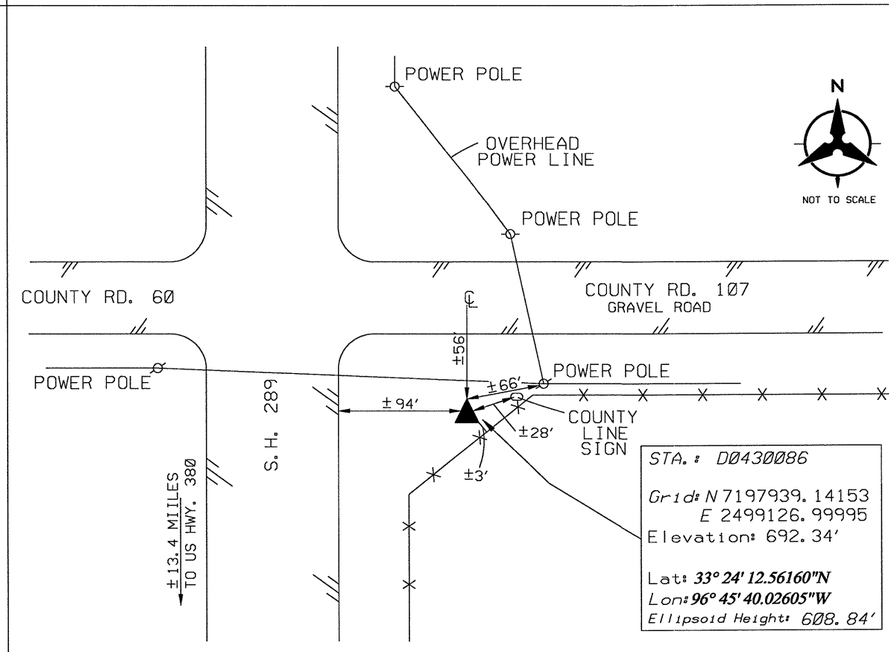

TxDOT 2" BRASS DISK SET IN CONCRETE STAMPED "TxDOT GPS D0430086" LOCATED APPROXIMATELY 150' EAST OF THE INTERSECTION OF S.H. 289 AND COUNTY ROAD 107.

Survey Date: 3/24/2006

Bohannan Huston
310 East I-30, Suite 100 Garland TX 75043 (972) 226-8181
ENGINEERING ▲ SPATIAL DATA ▲ ADVANCED TECHNOLOGIES

TEXAS DEPARTMENT OF TRANSPORTAION

S.H. 289
LIMITS: CR 26 TO COLLIN/GRAYSON CO. LINE
HORIZONTAL & VERTICAL CONTROL

FHWA TEXAS DIVISION	STATE PROJECT NO.		SHEET NO.
			126
STATE	DISTRICT	COUNTY	
TEXAS	18	COLLIN	
CONTROL	SECTION	JOB	HIGHWAY NO.
0091	03 & 04	021 050	S.H. 289

R-201104-01

SH 289 HORIZONTAL ALIGNMENT
EXISTING CENTERLINE

FROM: STA. 303+05.00 TO: STA. 519+00.00

Course from PT 289PRO-4 to PC 289PRO-5 S 6° 40′ 44.56" W Dist 14,006.98

Curve Data

Curve 289PRO-5						
P.I. Station		273+38.40	X	2,496,501.57	Y	7,172,974.35
Delta	=	12° 03′ 26.93" (RT)				
Degree	=	1° 00′ 00.00"				
Tangent	=	605.11				
Length	=	1,205.75				
Radius	=	5,729.58				
External	=	31.86				
Long Chord	=	1,203.52				
Mid. Ord.	=	31.69				
P.C. Station		267+33.29	X	2,496,571.95	Y	7,173,575.35
P.T. Station		279+39.04	X	2,496,307.20	Y	7,172,401.31
C.C.			X	2,490,881.25	Y	7,174,241.74
Back	=	S 6° 40′ 44.56" W				
Ahead	=	S 18° 44′ 11.49" W				
Chord Bear	=	S 12° 42′ 28.02" W				

Course from PT 289PRO-5 to PC 289PRO-6 S 18° 44′ 11.49" W Dist 8,739.81

Curve Data

Curve 289PRO-6						
P.I. Station		376+90.90	X	2,493,174.73	Y	7,163,166.24
Delta	=	20° 02′ 03.50" (LT)				
Degree	=	1° 00′ 00.00"				
Tangent	=	1,012.05				
Length	=	2,003.43				
Radius	=	5,729.58				
External	=	88.70				
Long Chord	=	1,993.24				
Mid. Ord.	=	87.34				
P.C. Station		366+78.85	X	2,493,499.82	Y	7,164,124.66
P.T. Station		386+82.28	X	2,493,197.66	Y	7,162,154.45
C.C.			X	2,498,925.77	Y	7,162,284.22
Back	=	S 18° 44′ 11.49" W				
Ahead	=	S 1° 17′ 52.02" E				
Chord Bear	=	S 8° 43′ 09.73" W				

Course from PT 289PRO-6 to PC 289PRO-7 S 1° 17′ 52.02" E Dist 3,076.59

Curve Data

Curve 289PRO-7						
P.I. Station		418+92.14	X	2,493,270.36	Y	7,158,945.42
Delta	=	0° 45′ 48.83" (RT)				
Degree	=	0° 17′ 11.32"				
Tangent	=	133.27				
Length	=	266.53				
Radius	=	20,000.00				
External	=	0.44				
Long Chord	=	266.53				
Mid. Ord.	=	0.44				
P.C. Station		417+58.87	X	2,493,267.34	Y	7,159,078.65
P.T. Station		420+25.41	X	2,493,271.60	Y	7,158,812.15
C.C.			X	2,473,272.47	Y	7,158,625.68
Back	=	S 1° 17′ 52.02" E				
Ahead	=	S 0° 32′ 03.19" E				
Chord Bear	=	S 0° 54′ 57.60" E				

Course from PT 289PRO-7 to PC 289PRO-8 S 0° 32′ 03.19" E Dist 3,498.29

Curve Data

Curve 289PRO-8						
P.I. Station		456+51.64	X	2,493,305.41	Y	7,155,186.08
Delta	=	0° 32′ 34.79" (RT)				
Degree	=	0° 12′ 43.94"				
Tangent	=	127.94				
Length	=	255.88				
Radius	=	27,000.00				
External	=	0.30				
Long Chord	=	255.88				
Mid. Ord.	=	0.30				
P.C. Station		455+23.69	X	2,493,304.22	Y	7,155,314.02
P.T. Station		457+79.58	X	2,493,305.39	Y	7,155,058.14
C.C.			X	2,466,305.39	Y	7,155,062.28
Back	=	S 0° 32′ 03.19" E				
Ahead	=	S 0° 00′ 31.60" W				
Chord Bear	=	S 0° 15′ 45.79" E				

NOTE:

COORDINATES ARE IN FEET IN THE NORTH CENTRAL ZONE OF THE TEXAS STATE PLANE COORDINATE SYSTEM, REFERENCED TO THE NORTH AMERICAN DATUM OF 1983. COORDINATES ARE SURFACE ADJUSTED BY THE COLLIN COUNTY SURFACE ADJUSTMENT FACTOR 1.000152710

STATE OF TEXAS
NICHOLAS VON SPENCER
93702
LICENSED PROFESSIONAL ENGINEER

Nicholas V Spencer, P.E. 4-7-11
Signature of Registrant & Date

Texas Department of Transportation
© 2011

SH 289
HORIZONTAL & VERTICAL
CONTROL DATA SHEETS

SHEET 1 OF 2

DESIGN	FED. RD. DIV. NO.	STATE PROJECT NO.		HIGHWAY NO.
MK	6	(SEE TITLE SHEET)		SH 289
GRAPHICS MK	STATE	DISTRICT	COUNTY	SHEET NO.
CHECK NVS	TEXAS	DALLAS	COLLIN	127
CHECK NVS	CONTROL	SECTION	JOB	
	0091	04	055	

T:\DALDGN*A\SH 289 Celina\THE PLANS\Horizontal Data\Horiz data.dgn 4/7/2011

R-201104-01

SH 289 HORIZONTAL ALIGNMENT
EXISTING CENTERLINE

FROM: STA. 303+05.00 TO: STA. 519+00.00

Course from PT 289PRO-8 to PC 289PRO-9 S 0° 00′ 31.60" W Dist 1,985.27

Curve Data

Curve 289PRO-9							
P.I. Station			478+92.62	X	2,493,305.06	Y	7,152,945.09
Delta	=	0°	32′ 32.25" (LT)				
Degree	=	0°	12′ 43.94"				
Tangent	=		127.78				
Length	=		255.55				
Radius	=		27,000.00				
External	=		0.30				
Long Chord	=		255.55				
Mid. Ord.	=		0.30				
P.C. Station			477+64.85	X	2,493,305.08	Y	7,153,072.87
P.T. Station			480+20.40	X	2,493,306.25	Y	7,152,817.32
C.C.				X	2,520,305.08	Y	7,153,068.73
Back	=	S 0°	00′ 31.60" W				
Ahead	=	S 0°	32′ 00.64" E				
Chord Bear	=	S 0°	15′ 44.52" E				

Course from PT 289PRO-9 to PC 289PRO-10 S 0° 32′ 00.64" E Dist 2,769.08

Curve Data

Curve 289PRO-10							
P.I. Station			509+81.96	X	2,493,333.83	Y	7,149,855.89
Delta	=	1°	55′ 28.68" (RT)				
Degree	=	0°	30′ 00.00"				
Tangent	=		192.48				
Length	=		384.93				
Radius	=		11,459.16				
External	=		1.62				
Long Chord	=		384.91				
Mid. Ord.	=		1.62				
P.C. Station			507+89.48	X	2,493,332.04	Y	7,150,048.36
P.T. Station			511+74.40	X	2,493,329.16	Y	7,149,663.47
C.C.				X	2,481,873.38	Y	7,149,941.66
Back	=	S 0°	32′ 00.64" E				
Ahead	=	S 1°	23′ 28.04" W				
Chord Bear	=	S 0°	25′ 43.70" W				

NOTE:

COORDINATES ARE IN FEET IN THE NORTH CENTRAL ZONE OF THE TEXAS STATE PLANE COORDINATE SYSTEM, REFERENCED TO THE NORTH AMERICAN DATUM OF 1983. COORDINATES ARE SURFACE ADJUSTED BY THE COLLIN COUNTY SURFACE ADJUSTMENT FACTOR 1.000152710

STATE OF TEXAS
NICHOLAS VON SPENCER
93702
LICENSED
PROFESSIONAL ENGINEER

Nicholas V Spencer, P.E. 4-7-11
Signature of Registrant & Date

Texas Department of Transportation
© 2011

SH 289
HORIZONTAL & VERTICAL
CONTROL DATA SHEETS

SHEET 2 OF 2

DESIGN	FED. RD. DIV. NO.	STATE PROJECT NO.		HIGHWAY NO.
MK	6	(SEE TITLE SHEET)		SH 289
GRAPHICS	STATE	DISTRICT	COUNTY	SHEET NO.
MK	TEXAS	DALLAS	COLLIN	128
CHECK	CONTROL	SECTION	JOB	
NVS	0091	04	055	
CHECK NVS				

T:\DALDGN*A\SH 289 Collin\THE PLANS\Horizontal Data\Horiz data.dgn 4/7/2011

R-201104-01

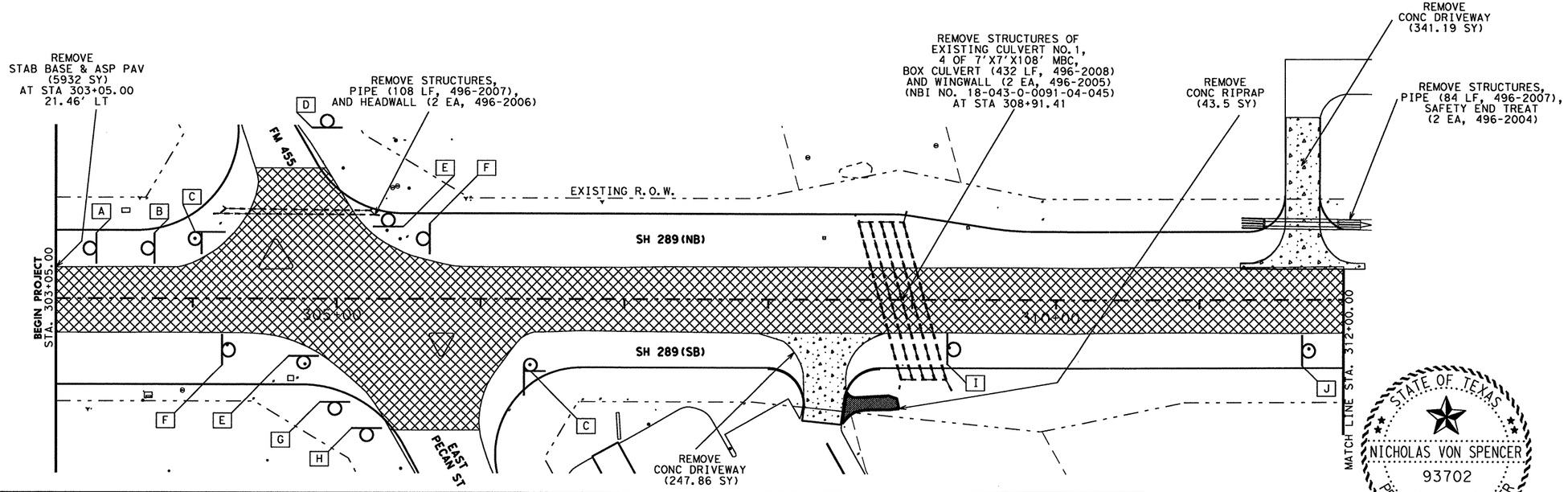

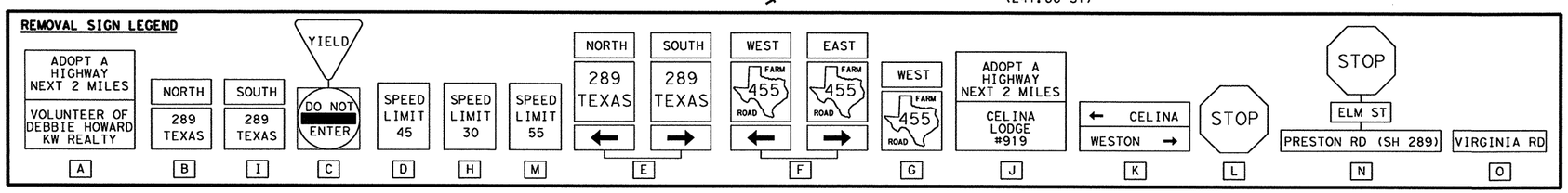

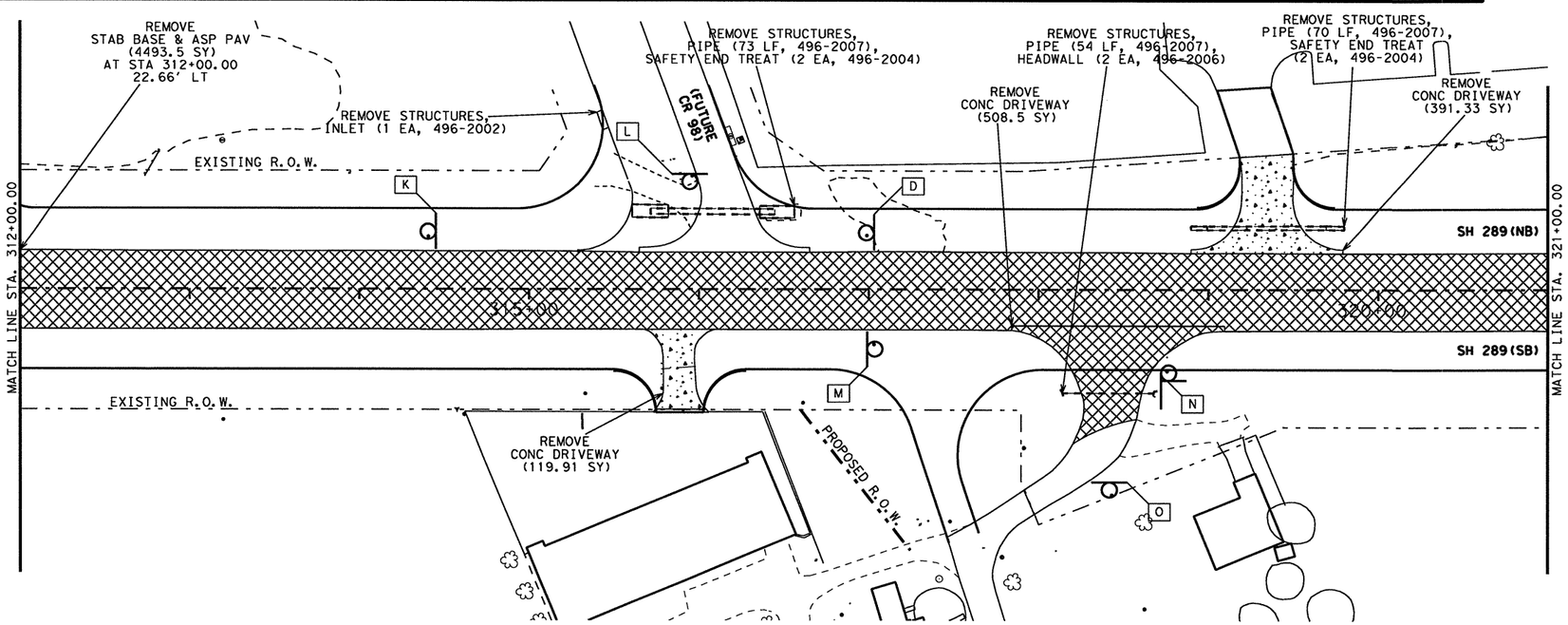

STATE OF TEXAS
NICHOLAS VON SPENCER
93702
LICENSED
PROFESSIONAL ENGINEER

Signature of Registrant & Date, P.E. 5-26-11

LEGEND

- SIGN TO BE REMOVED
- REMOVAL OF STABILIZED BASE & ASPHALT PAVEMENT (8"-20") (105-2061)
- REMOVAL OF CONCRETE PAVEMENT (104-2001)
- REMOVAL OF CONCRETE DRIVEWAY (104-2017)
- REMOVAL OF CONCRETE RIPRAP (104-2009)

NOTES:

1. SEE CULVERT LAYOUTS FOR REPLACING BACK THE CULVERTS.
2. SEE DRAINAGE REMOVAL SHEETS FOR ITEMS NOT SHOWN HERE.
3. SEE EXISTING SOIL BORING DATA SHEETS FOR DETAILS OF EXISTING PAVEMENT DEPTHS.

Texas Department of Transportation
© 2011

SH 289
REMOVAL ITEMS LAYOUT
(STA 303+05 TO STA 321+00)

SCALE: 1" = 80' SHEET 1 OF 12

DESIGN	FED. RD. DIV. NO.	STATE PROJECT NO.		HIGHWAY NO.
HJL	6			SH 289
GRAPHICS HJL	STATE	DISTRICT	COUNTY	SHEET NO.
CHECK NVS	TEXAS	18	COLLIN	129
CHECK NVS	CONTROL	SECTION	JOB	
	0091	04	055	

R-201104-01

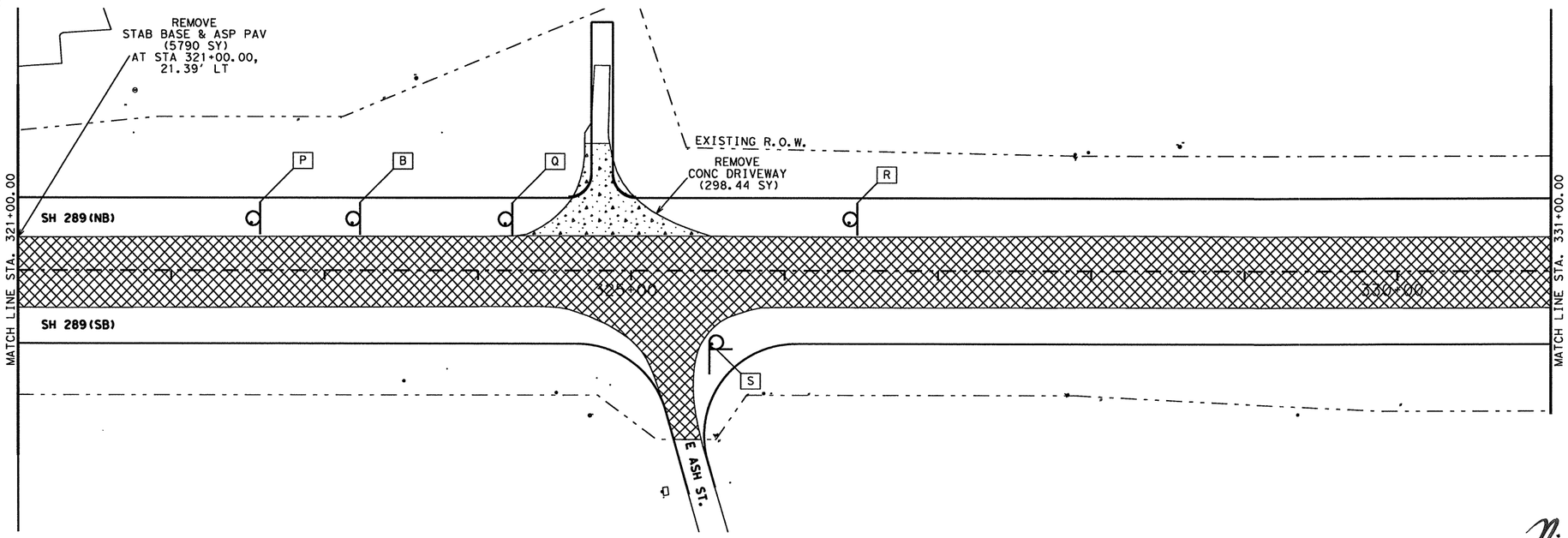

STATE OF TEXAS
NICHOLAS VON SPENCER
93702
LICENSED
PROFESSIONAL ENGINEER

Nicholas V Spencer P.E. 4-7-11
Signature of Registrant & Date

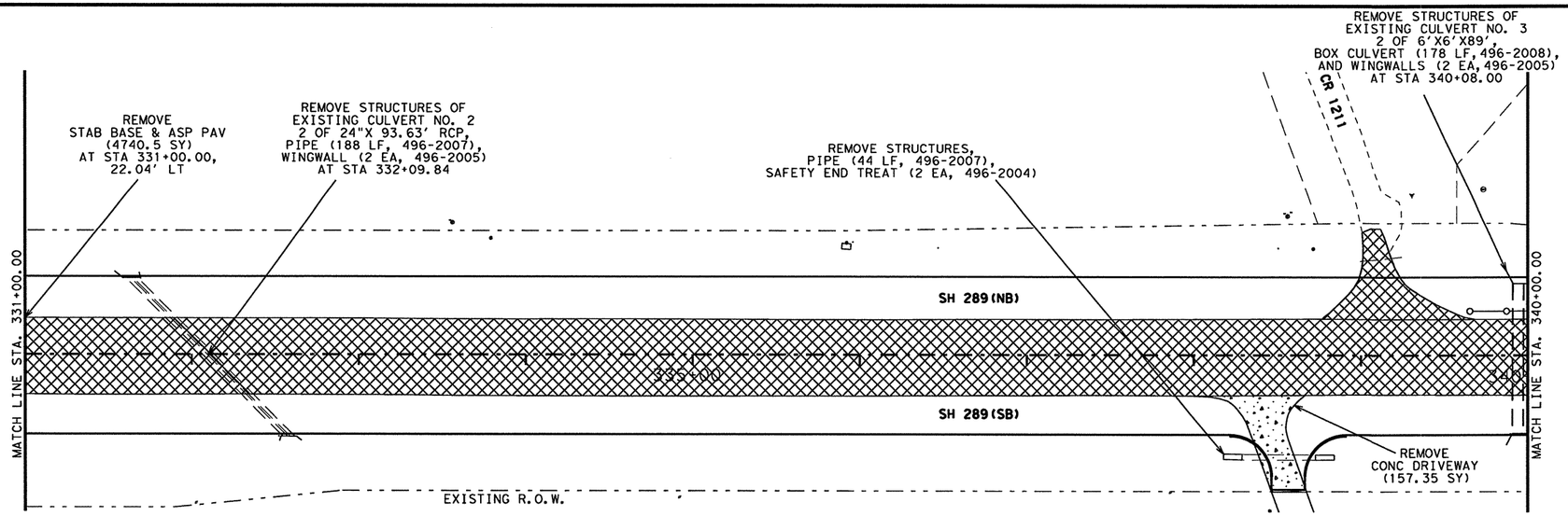

LEGEND

- SIGN TO BE REMOVED
- REMOVAL OF STABILIZED BASE & ASPHALT PAVEMENT (8"-20") (105-2061)
- REMOVAL OF CONCRETE PAVEMENT (104-2001)
- REMOVAL OF CONCRETE DRIVEWAY (104-2017)
- REMOVAL OF CONCRETE RIPRAP (104-2009)

NOTES:

1. SEE CULVERT LAYOUTS FOR REPLACING BACK THE CULVERTS.
2. SEE DRAINAGE REMOVAL SHEETS FOR ITEMS NOT SHOWN HERE.
3. SEE EXISTING SOIL BORING DATA SHEETS FOR DETAILS OF EXISTING PAVEMENT DEPTHS.

REMOVAL SIGN LEGEND

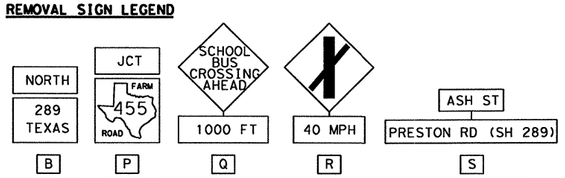

Texas Department of Transportation
© 2011

SH 289
REMOVAL ITEMS LAYOUT
(STA 321+00 TO STA 340+00)

SCALE: 1"= 80' SHEET 2 OF 12

DESIGN	FED. RD. DIV. NO.	STATE PROJECT NO.			HIGHWAY NO.
HJL	6	C 91-4-55			SH 289
GRAPHICS HJL	STATE	DISTRICT	COUNTY		SHEET NO.
CHECK NVS	TEXAS	18	COLLIN		130
CHECK NVS	CONTROL	SECTION	JOB		
	0091	04	055		

R-201104-01

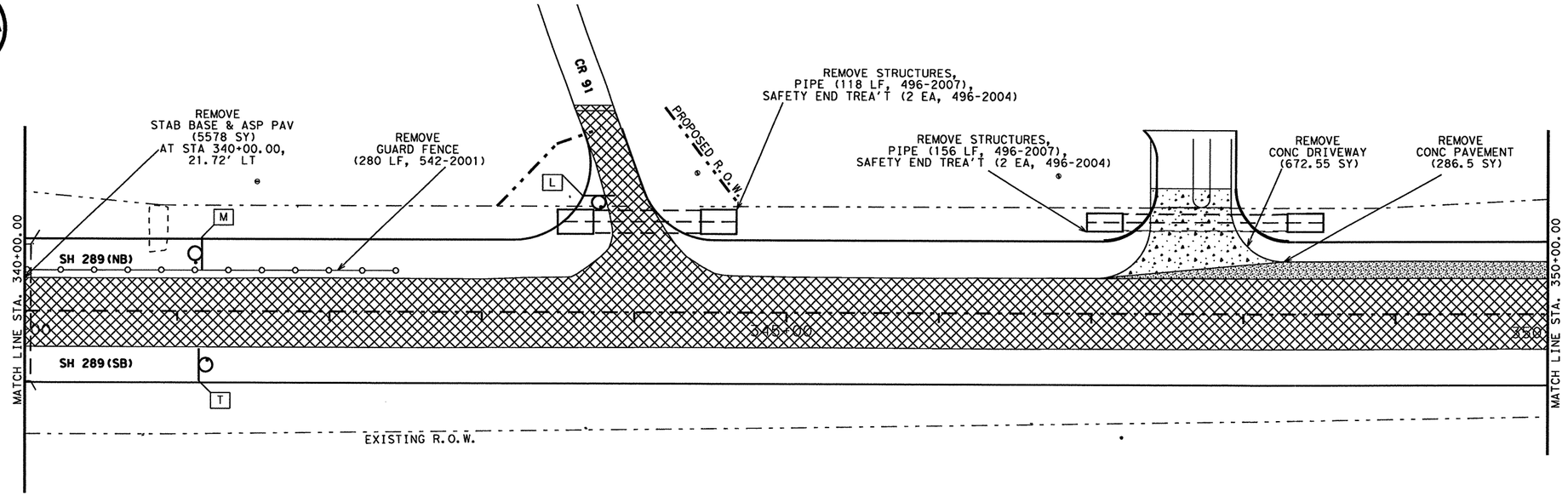

STATE OF TEXAS
NICHOLAS VON SPENCER
93702
LICENSED
PROFESSIONAL ENGINEER

Nicholas V Spencer, P.E. 4-7-11
Signature of Registrant & Date

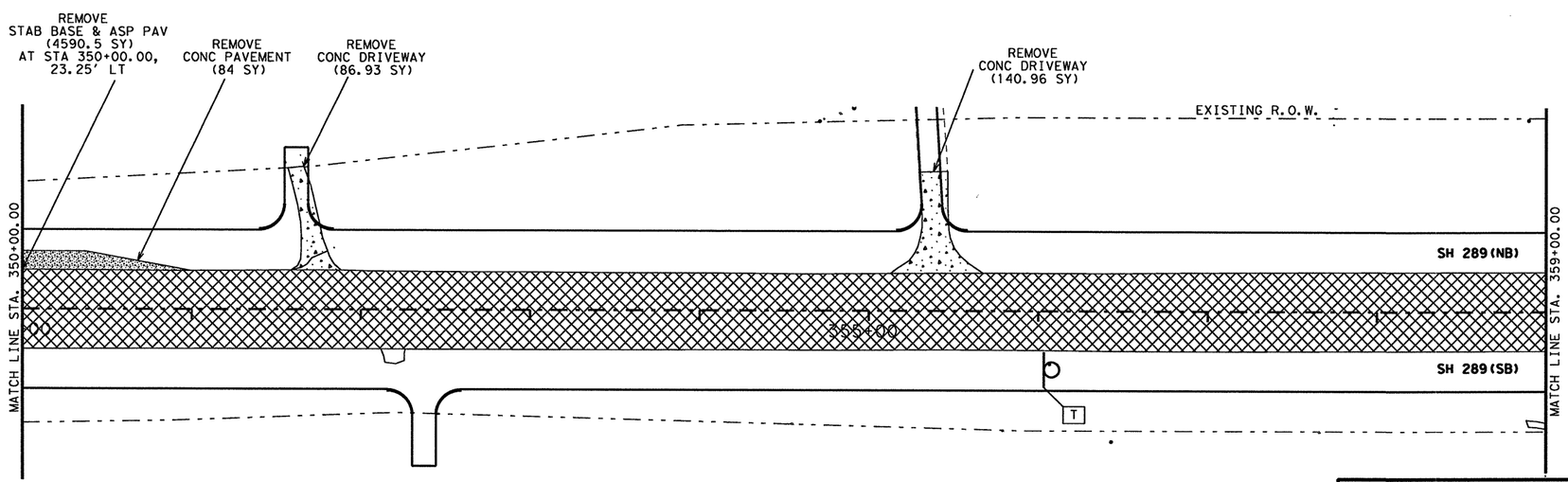

LEGEND

- SIGN TO BE REMOVED
- REMOVAL OF STABILIZED BASE & ASPHALT PAVEMENT (8"-20") (105-2061)
- REMOVAL OF CONCRETE PAVEMENT (104-2001)
- REMOVAL OF CONCRETE DRIVEWAY (104-2017)
- REMOVAL OF CONCRETE RIPRAP (104-2009)

NOTES:

1. SEE CULVERT LAYOUTS FOR REPLACING BACK THE CULVERTS.
2. SEE DRAINAGE REMOVAL SHEETS FOR ITEMS NOT SHOWN HERE.
3. SEE EXISTING SOIL BORING DATA SHEETS FOR DETAILS OF EXISTING PAVEMENT DEPTHS.

REMOVAL SIGN LEGEND

SPEED LIMIT 55	SPEED LIMIT 60	STOP
M	T	L

Texas Department of Transportation
© 2011

SH 289
REMOVAL ITEMS LAYOUT
(STA 340+00 TO STA 359+00)

SCALE: 1"= 80' SHEET 3 OF 12

DESIGN	FED. RD. DIV. NO.	STATE PROJECT NO.		HIGHWAY NO.
HJL	6	C 91-4-55		SH 289
GRAPHICS HJL	STATE	DISTRICT	COUNTY	SHEET NO.
CHECK NVS	TEXAS	18	COLLIN	131
CHECK NVS	CONTROL	SECTION	JOB	
	0091	04	055	

R-201104-01

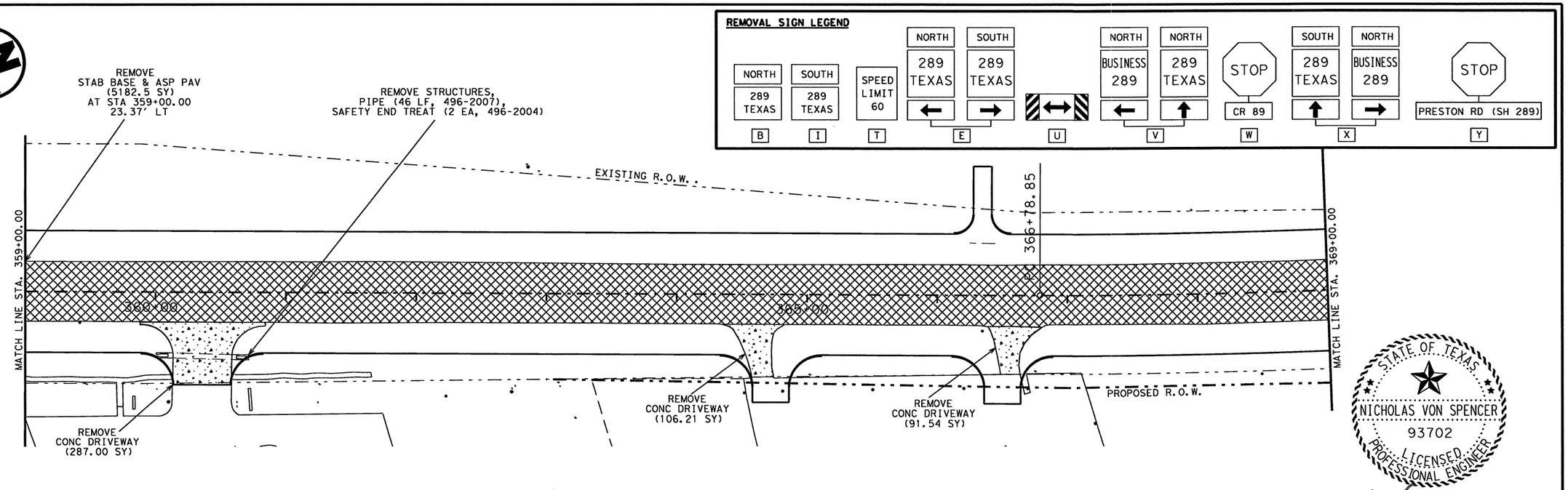

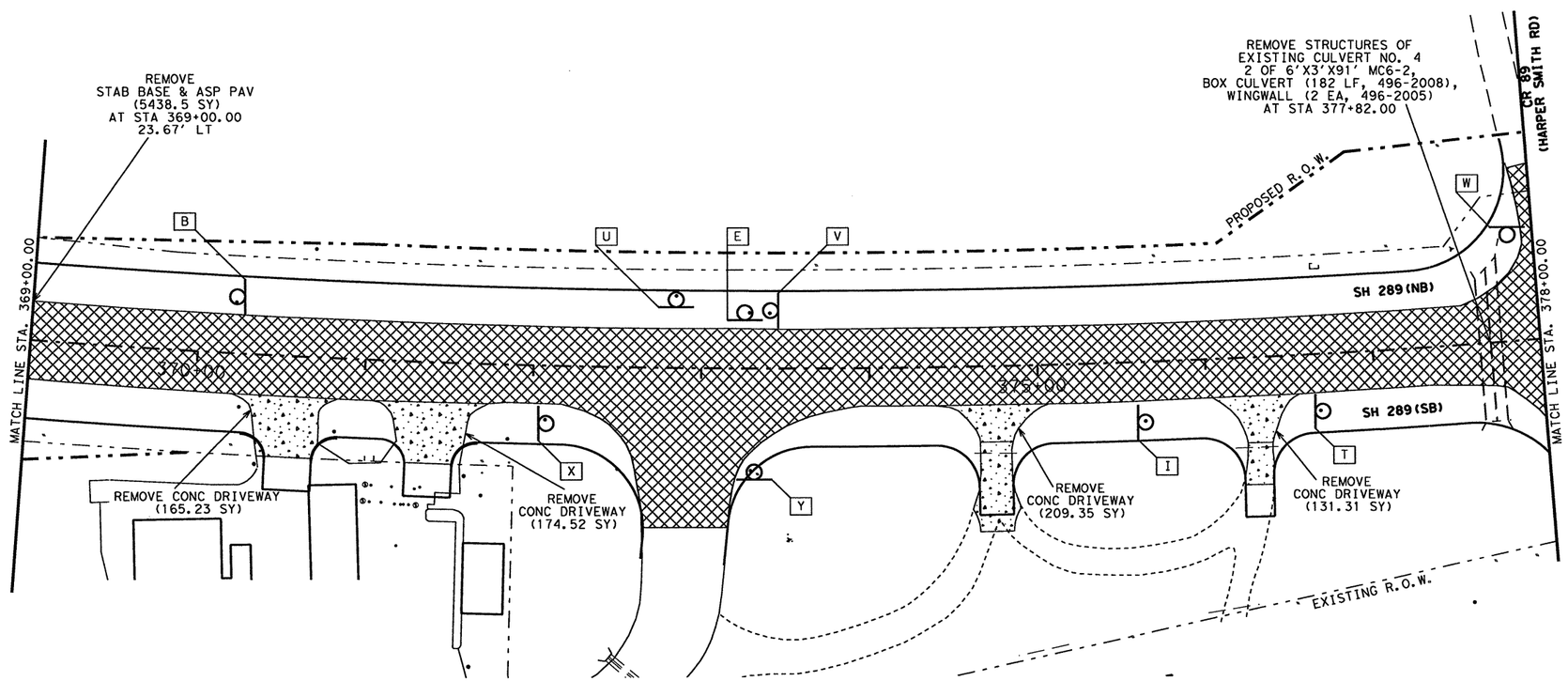

LEGEND

- SIGN TO BE REMOVED
- REMOVAL OF STABILIZED BASE & ASPHALT PAVEMENT (8"-20") (105-2061)
- REMOVAL OF CONCRETE PAVEMENT (104-2001)
- REMOVAL OF CONCRETE DRIVEWAY (104-2017)
- REMOVAL OF CONCRETE RIPRAP (104-2009)

NOTES:

1. SEE CULVERT LAYOUTS FOR REPLACING BACK THE CULVERTS.
2. SEE DRAINAGE REMOVAL SHEETS FOR ITEMS NOT SHOWN HERE.
3. SEE EXISTING SOIL BORING DATA SHEETS FOR DETAILS OF EXISTING PAVEMENT DEPTHS.

Texas Department of Transportation © 2011

SH 289 REMOVAL ITEMS LAYOUT (STA 359+00 TO STA 378+00)

SCALE: 1"= 80' SHEET 4 OF 12

DESIGN	FED. RD. DIV. NO.	STATE PROJECT NO.		HIGHWAY NO.
HJL	6	C 91-4-55		SH 289
GRAPHICS HJL	STATE	DISTRICT	COUNTY	SHEET NO.
CHECK NVS	TEXAS	18	COLLIN	132
CHECK NVS	CONTROL	SECTION	JOB	
	0091	04	055	

R-201104-01

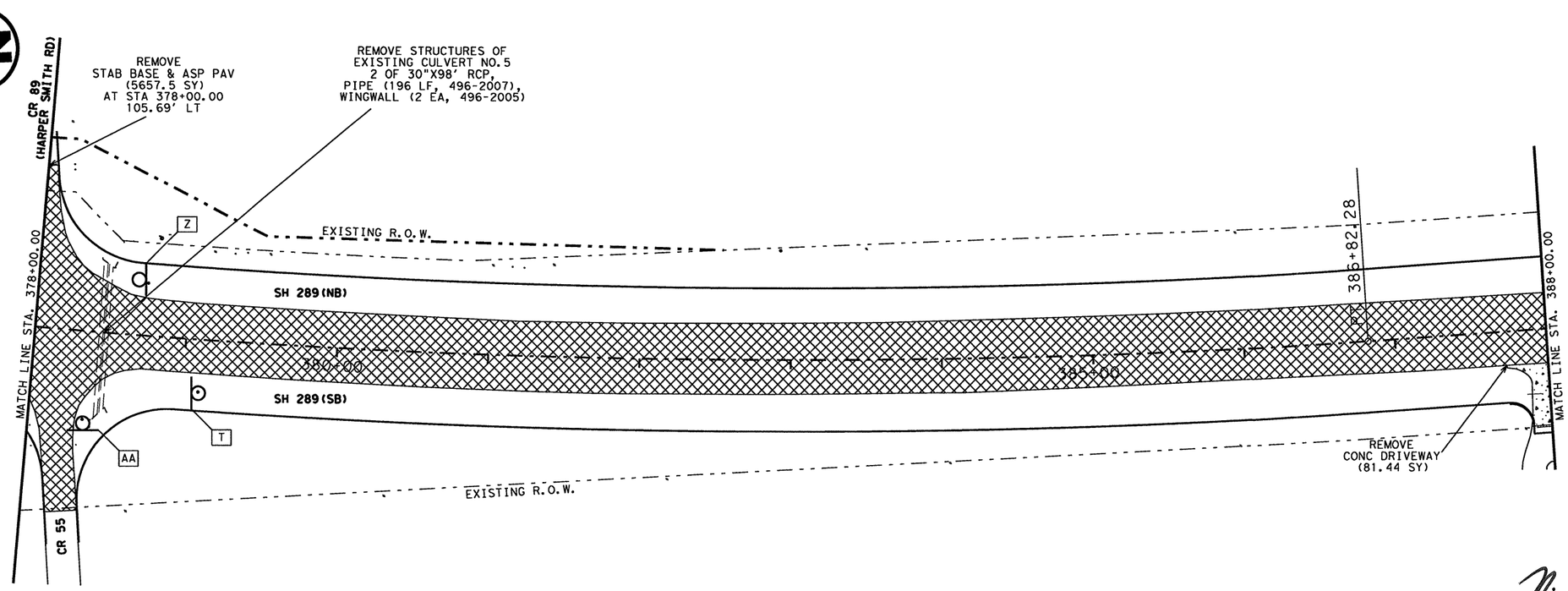

STATE OF TEXAS
NICHOLAS VON SPENCER
93702
LICENSED
PROFESSIONAL ENGINEER

Nicholas Von Spencer, P.E. 4-7-11
Signature of Registrant & Date

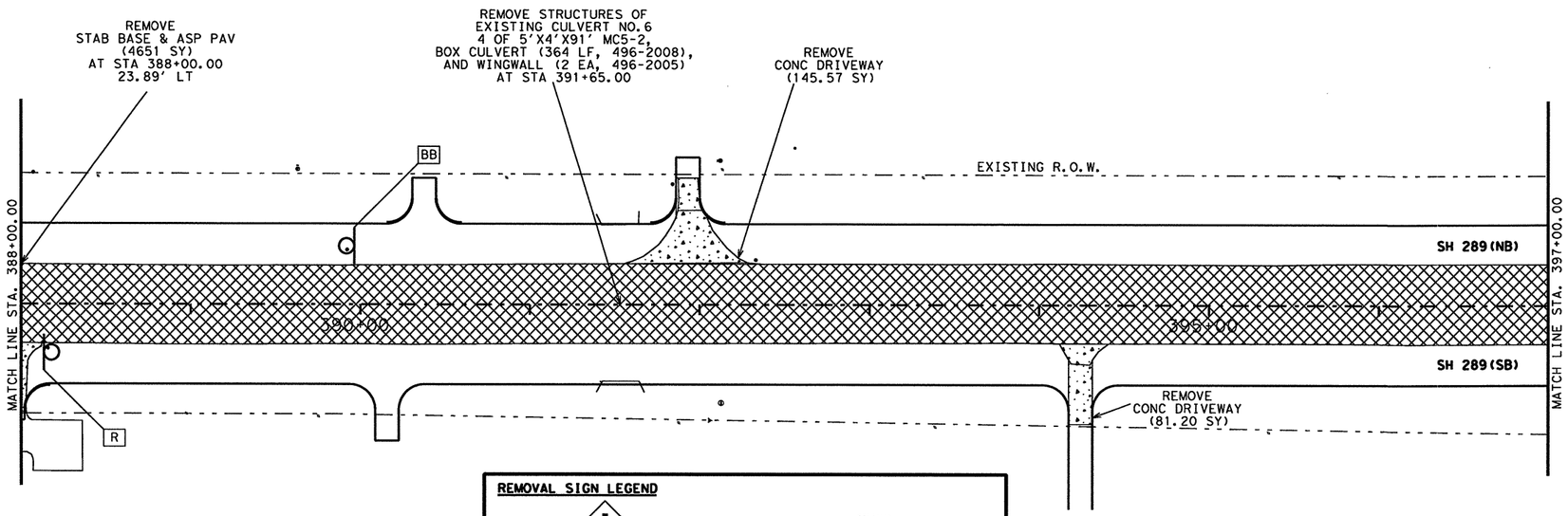

REMOVAL SIGN LEGEND

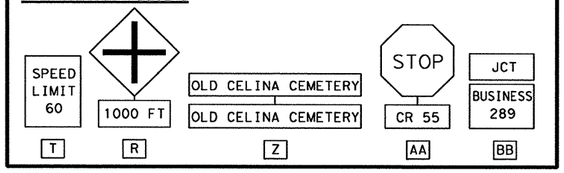

LEGEND

- SIGN TO BE REMOVED
- REMOVAL OF STABILIZED BASE & ASPHALT PAVEMENT (8"-20") (105-2061)
- REMOVAL OF CONCRETE PAVEMENT (104-2001)
- REMOVAL OF CONCRETE DRIVEWAY (104-2017)
- REMOVAL OF CONCRETE RIPRAP (104-2009)

NOTES:

1. SEE CULVERT LAYOUTS FOR REPLACING BACK THE CULVERTS.
2. SEE DRAINAGE REMOVAL SHEETS FOR ITEMS NOT SHOWN HERE.
3. SEE EXISTING SOIL BORING DATA SHEETS FOR DETAILS OF EXISTING PAVEMENT DEPTHS.

Texas Department of Transportation
© 2011

SH 289
REMOVAL ITEMS LAYOUT
(STA 378+00 TO STA 397+00)

SCALE: 1"= 80' SHEET 5 OF 12

DESIGN	FED. RD. DIV. NO.	STATE PROJECT NO.		HIGHWAY NO.
HJL	6	C 91-4-55		SH 289
GRAPHICS	STATE	DISTRICT	COUNTY	SHEET NO.
HJL	TEXAS	18	COLLIN	133
CHECK	CONTROL	SECTION	JOB	
NVS	0091	04	055	
CHECK NVS				

R-201104-01

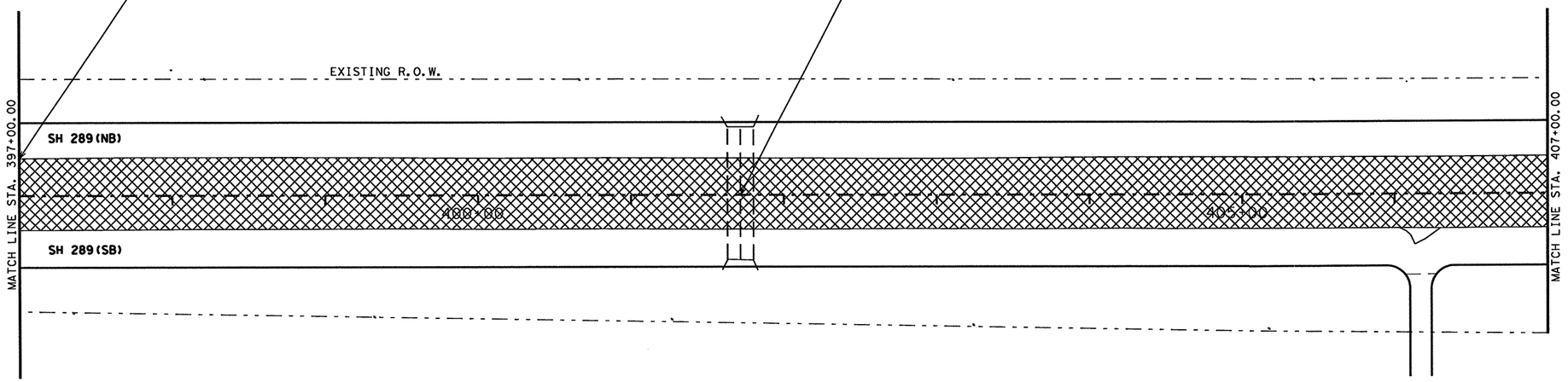

STATE OF TEXAS
NICHOLAS VON SPENCER
93702
LICENSED
PROFESSIONAL ENGINEER

Nicholas Von Spencer, P.E. 4-7-11
Signature of Registrant & Date

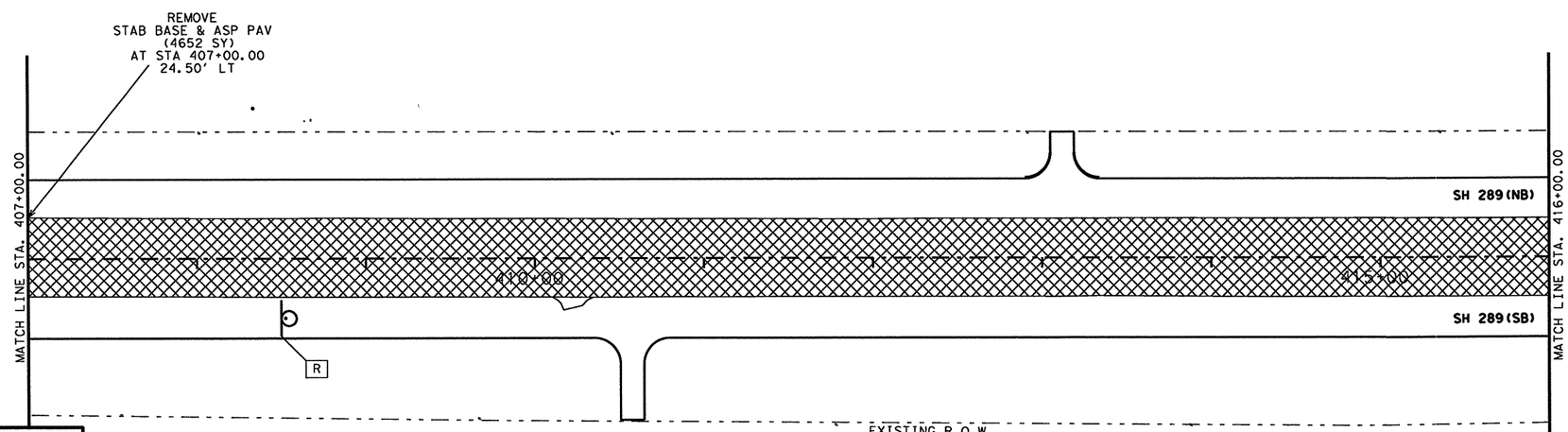

REMOVAL SIGN LEGEND

1000 FT

R

LEGEND

- SIGN TO BE REMOVED
- REMOVAL OF STABILIZED BASE & ASPHALT PAVEMENT (8"-20") (105-2061)
- REMOVAL OF CONCRETE PAVEMENT (104-2001)
- REMOVAL OF CONCRETE DRIVEWAY (104-2017)
- REMOVAL OF CONCRETE RIPRAP (104-2009)

NOTES:

1. SEE CULVERT LAYOUTS FOR REPLACING BACK THE CULVERTS.
2. SEE DRAINAGE REMOVAL SHEETS FOR ITEMS NOT SHOWN HERE.
3. SEE EXISTING SOIL BORING DATA SHEETS FOR DETAILS OF EXISTING PAVEMENT DEPTHS.

Texas Department of Transportation
© 2011

SH 289
REMOVAL ITEMS LAYOUT
(STA 397+00 TO STA 416+00)

SCALE: 1"= 80' SHEET 6 OF 12

DESIGN	FED. RD. DIV. NO.	STATE PROJECT NO.		HIGHWAY NO.
HJL	6	C 91-4-55		SH 289
GRAPHICS HJL	STATE	DISTRICT	COUNTY	SHEET NO.
CHECK NVS	TEXAS	18	COLLIN	134
CHECK NVS	CONTROL	SECTION	JOB	
	0091	04	055	

R-201104-01

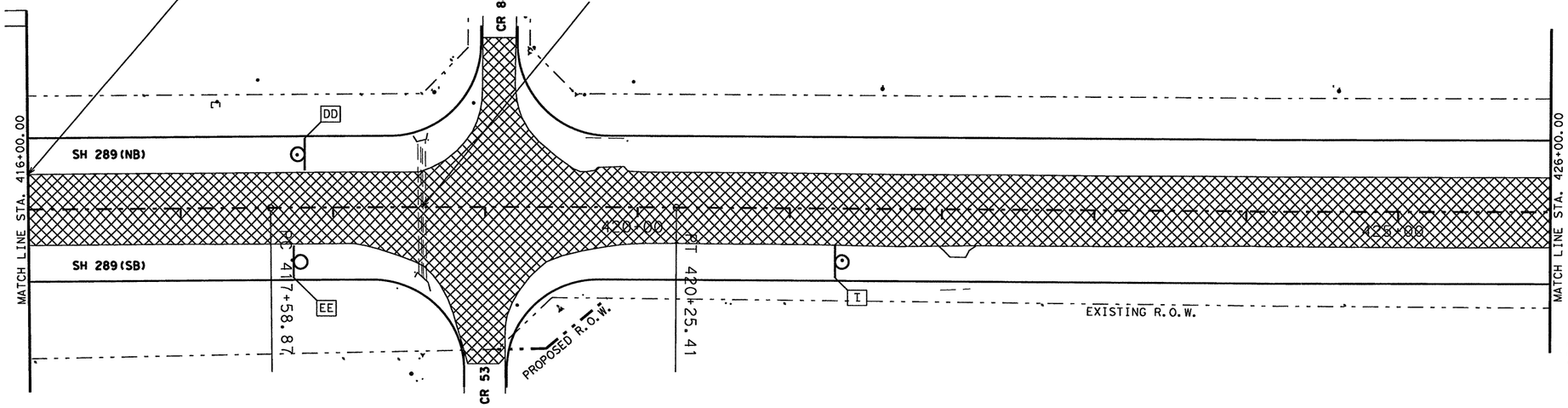

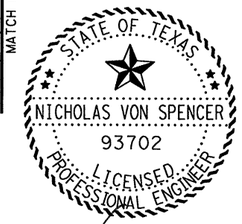

Nicholas Von Spencer, P.E. 4-7-11
Signature of Registrant & Date

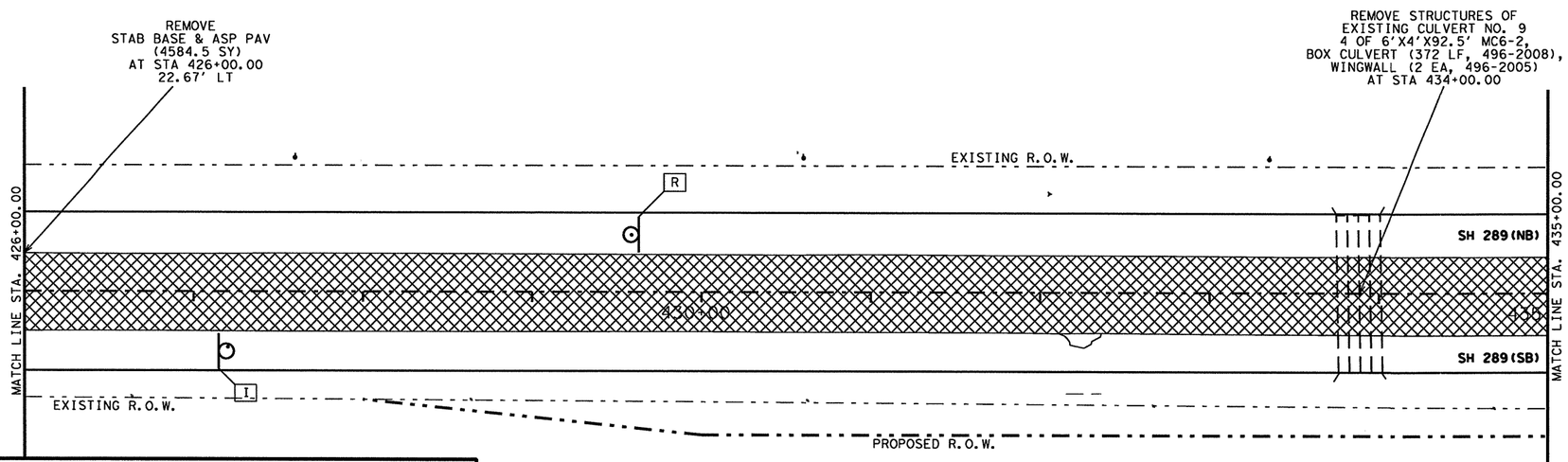

LEGEND

- SIGN TO BE REMOVED
- REMOVAL OF STABILIZED BASE & ASPHALT PAVEMENT (8"-20") (105-2061)
- REMOVAL OF CONCRETE PAVEMENT (104-2001)
- REMOVAL OF CONCRETE DRIVEWAY (104-2017)
- REMOVAL OF CONCRETE RIPRAP (104-2009)

NOTES:

1. SEE CULVERT LAYOUTS FOR REPLACING BACK THE CULVERTS.
2. SEE DRAINAGE REMOVAL SHEETS FOR ITEMS NOT SHOWN HERE.
3. SEE EXISTING SOIL BORING DATA SHEETS FOR DETAILS OF EXISTING PAVEMENT DEPTHS.

REMOVAL SIGN LEGEND

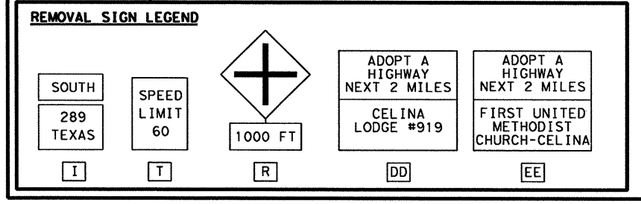

Texas Department of Transportation
© 2011

SH 289
REMOVAL ITEMS LAYOUT
(STA 416+00 TO STA 435+00)

SCALE: 1" = 80'

DESIGN	FED. RD. DIV. NO.	STATE PROJECT NO.		HIGHWAY NO.
HJL	6	C 91-4-55		SH 289
GRAPHICS HJL	STATE	DISTRICT	COUNTY	SHEET NO.
CHECK NVS	TEXAS	18	COLLIN	135
CHECK NVS	CONTROL	SECTION	JOB	
	0091	04	055	

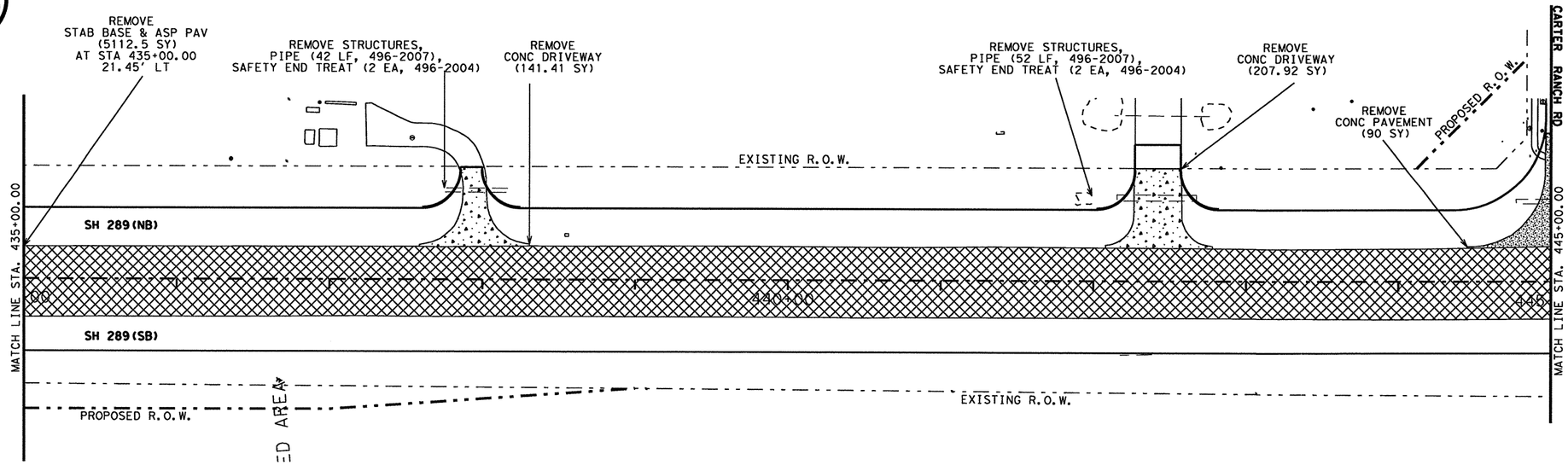

STATE OF TEXAS
NICHOLAS VON SPENCER
93702
LICENSED
PROFESSIONAL ENGINEER

Nicholas V Spencer P.E. 4-7-11
Signature of Registrant & Date

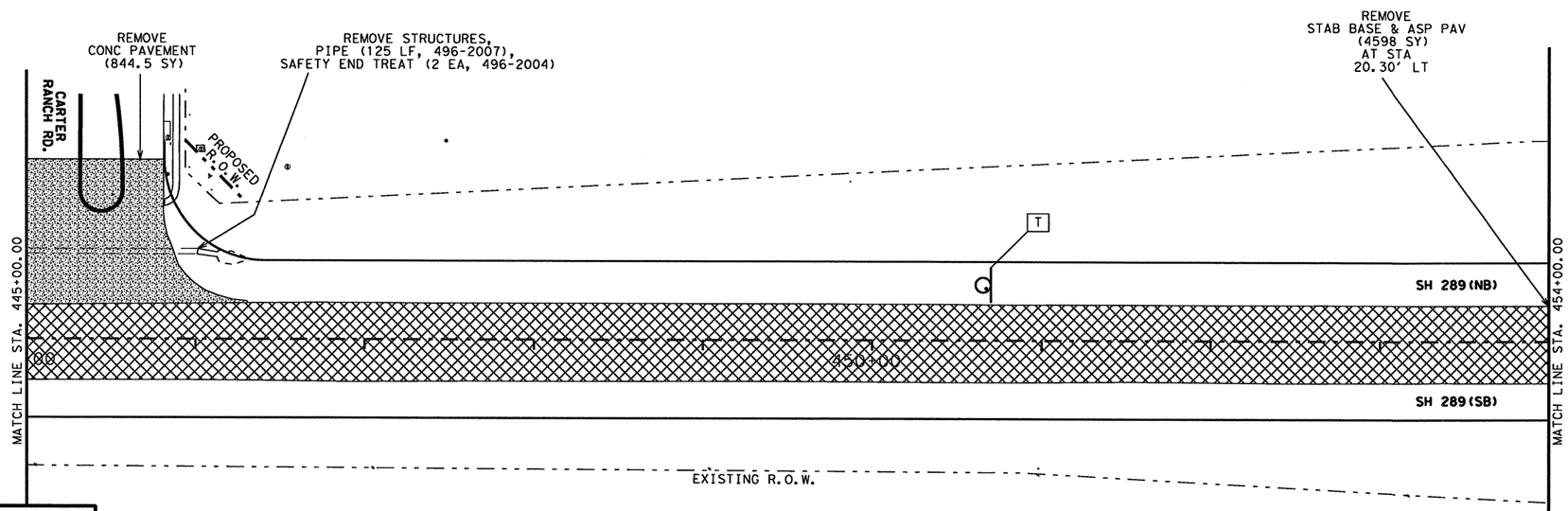

REMOVAL SIGN LEGEND

SPEED LIMIT 60

T

LEGEND

- SIGN TO BE REMOVED
- REMOVAL OF STABILIZED BASE & ASPHALT PAVEMENT (8"-20") (105-2061)
- REMOVAL OF CONCRETE PAVEMENT (104-2001)
- REMOVAL OF CONCRETE DRIVEWAY (104-2017)
- REMOVAL OF CONCRETE RIPRAP (104-2009)

NOTES:

1. SEE CULVERT LAYOUTS FOR REPLACING BACK THE CULVERTS.
2. SEE DRAINAGE REMOVAL SHEETS FOR ITEMS NOT SHOWN HERE.
3. SEE EXISTING SOIL BORING DATA SHEETS FOR DETAILS OF EXISTING PAVEMENT DEPTHS.

Texas Department of Transportation
© 2011

SH 289
REMOVAL ITEMS LAYOUT
(STA 435+00 TO STA 454+00)

SCALE: 1"= 80' SHEET 8 OF 12

DESIGN	FED. RD. DIV. NO.	STATE PROJECT NO.		HIGHWAY NO.
HJL	6	C 91-4-55		SH 289
GRAPHICS HJL	STATE	DISTRICT	COUNTY	SHEET NO.
CHECK NVS	TEXAS	18	COLLIN	136
CHECK NVS	CONTROL	SECTION	JOB	
	0091	04	055	

R-201104-01

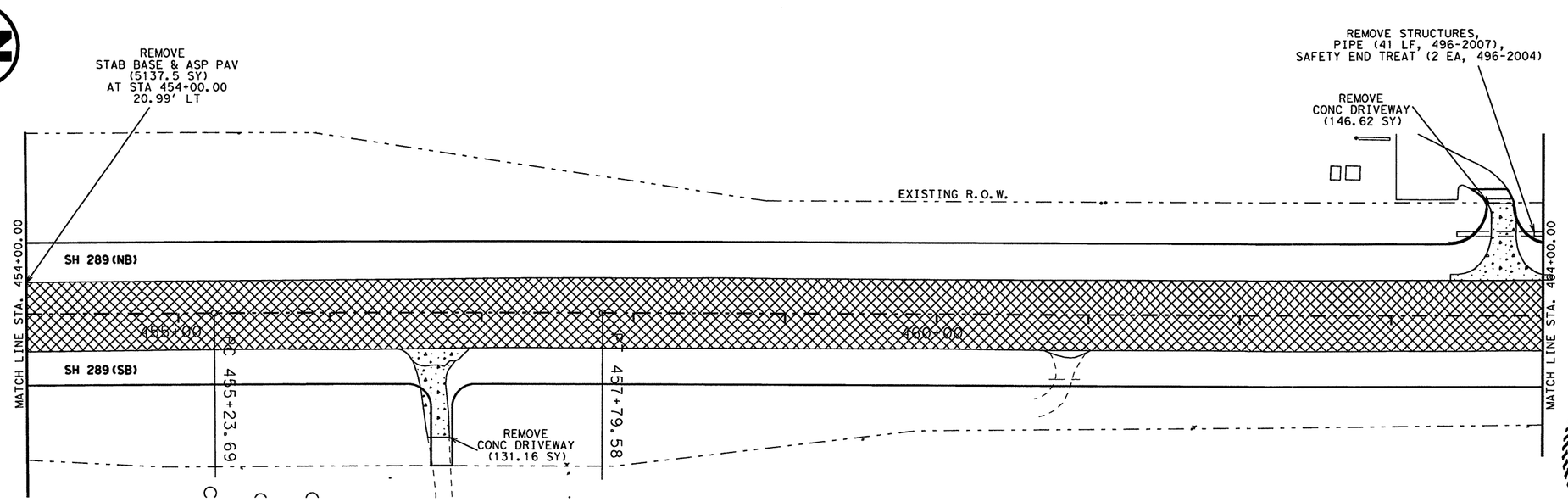

STATE OF TEXAS
NICHOLAS VON SPENCER
93702
LICENSED
PROFESSIONAL ENGINEER

Nicholas Von Spencer, P.E. 4-7-11
Signature of Registrant & Date

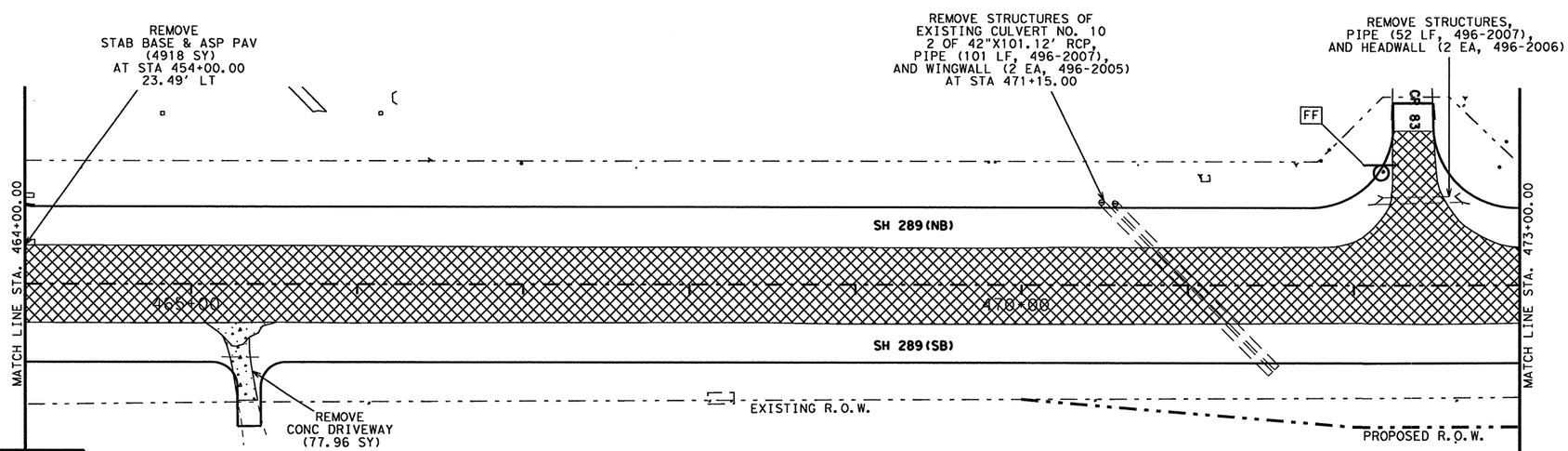

REMOVAL SIGN LEGEND

STOP
CR 83
FF

LEGEND

- SIGN TO BE REMOVED
- REMOVAL OF STABILIZED BASE & ASPHALT PAVEMENT (8"-20") (105-2061)
- REMOVAL OF CONCRETE PAVEMENT (104-2001)
- REMOVAL OF CONCRETE DRIVEWAY (104-2017)
- REMOVAL OF CONCRETE RIPRAP (104-2009)

NOTES:

1. SEE CULVERT LAYOUTS FOR REPLACING BACK THE CULVERTS.
2. SEE DRAINAGE REMOVAL SHEETS FOR ITEMS NOT SHOWN HERE.
3. SEE EXISTING SOIL BORING DATA SHEETS FOR DETAILS OF EXISTING PAVEMENT DEPTHS.

Texas Department of Transportation
© 2011

SH 289
REMOVAL ITEMS LAYOUT
(STA 454+00 TO STA 473+00)

SCALE: 1"= 80'

DESIGN	FED. RD. DIV. NO.	STATE PROJECT NO.		HIGHWAY NO.
HJL	6	C 91-4-55		SH 289
GRAPHICS	STATE	DISTRICT	COUNTY	SHEET NO.
HJL	TEXAS	18	COLLIN	137
CHECK	CONTROL	SECTION	JOB	
NVS	0091	04	055	
CHECK NVS				

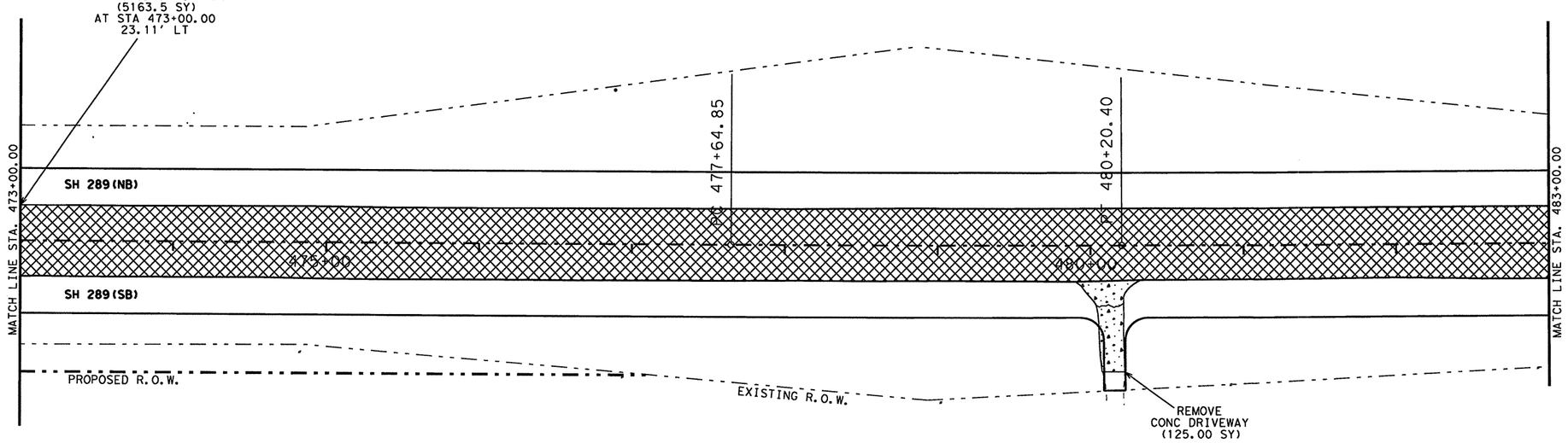

STATE OF TEXAS
NICHOLAS VON SPENCER
93702
LICENSED
PROFESSIONAL ENGINEER

Nicholas V Spencer P.E. 4-7-11
Signature of Registrant & Date

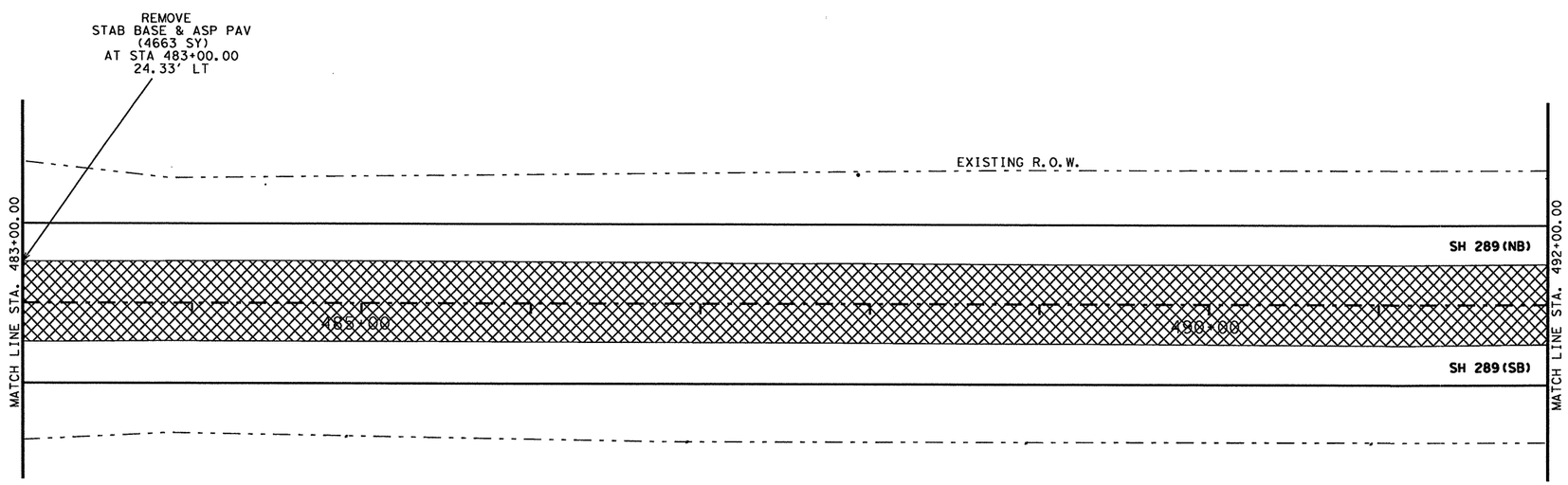

LEGEND

- SIGN TO BE REMOVED
- REMOVAL OF STABILIZED BASE & ASPHALT PAVEMENT (8"-20") (105-2061)
- REMOVAL OF CONCRETE PAVEMENT (104-2001)
- REMOVAL OF CONCRETE DRIVEWAY (104-2017)
- REMOVAL OF CONCRETE RIPRAP (104-2009)

NOTES:

1. SEE CULVERT LAYOUTS FOR REPLACING BACK THE CULVERTS.
2. SEE DRAINAGE REMOVAL SHEETS FOR ITEMS NOT SHOWN HERE.
3. SEE EXISTING SOIL BORING DATA SHEETS FOR DETAILS OF EXISTING PAVEMENT DEPTHS.

Texas Department of Transportation
© 2011

SH 289
REMOVAL ITEMS LAYOUT
(STA 473+00 TO STA 492+00)

SCALE: 1" = 80' SHEET 10 OF 12

DESIGN	FED. RD. DIV. NO.	STATE PROJECT NO.			HIGHWAY NO.
HJL	6	C 91-4-55			SH 289
GRAPHICS HJL	STATE	DISTRICT	COUNTY		SHEET NO.
CHECK NVS	TEXAS	18	COLLIN		138
CHECK NVS	CONTROL	SECTION	JOB		
	0091	04	055		

R-201104-01

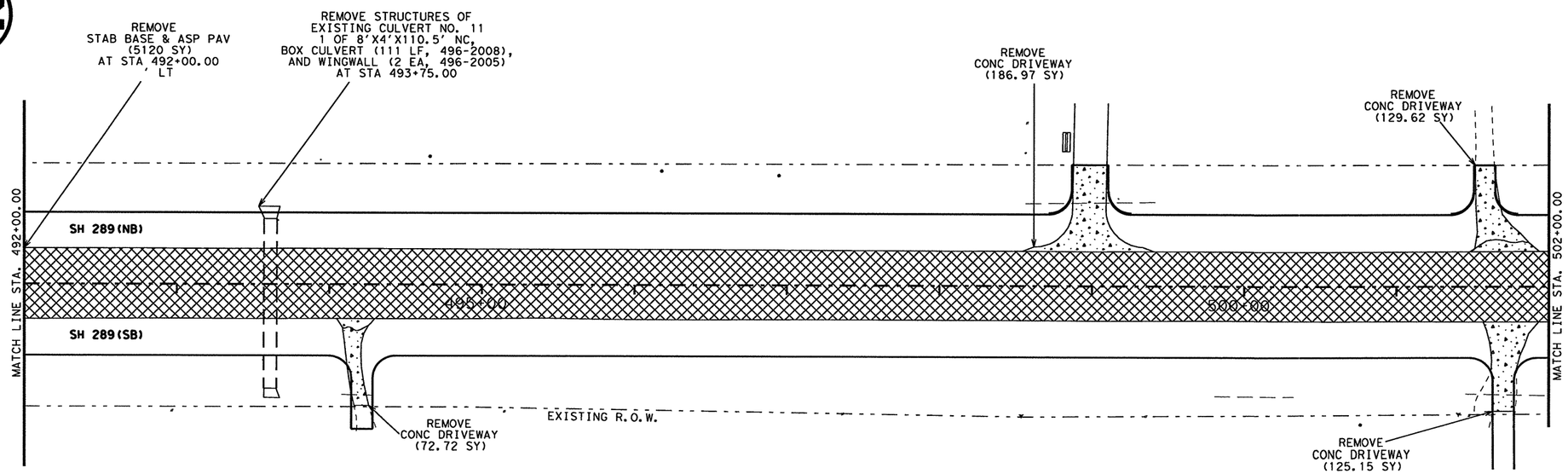

STATE OF TEXAS
NICHOLAS VON SPENCER
93702
LICENSED
PROFESSIONAL ENGINEER

Signature of Registrant, P.E. & Date 4-7-11

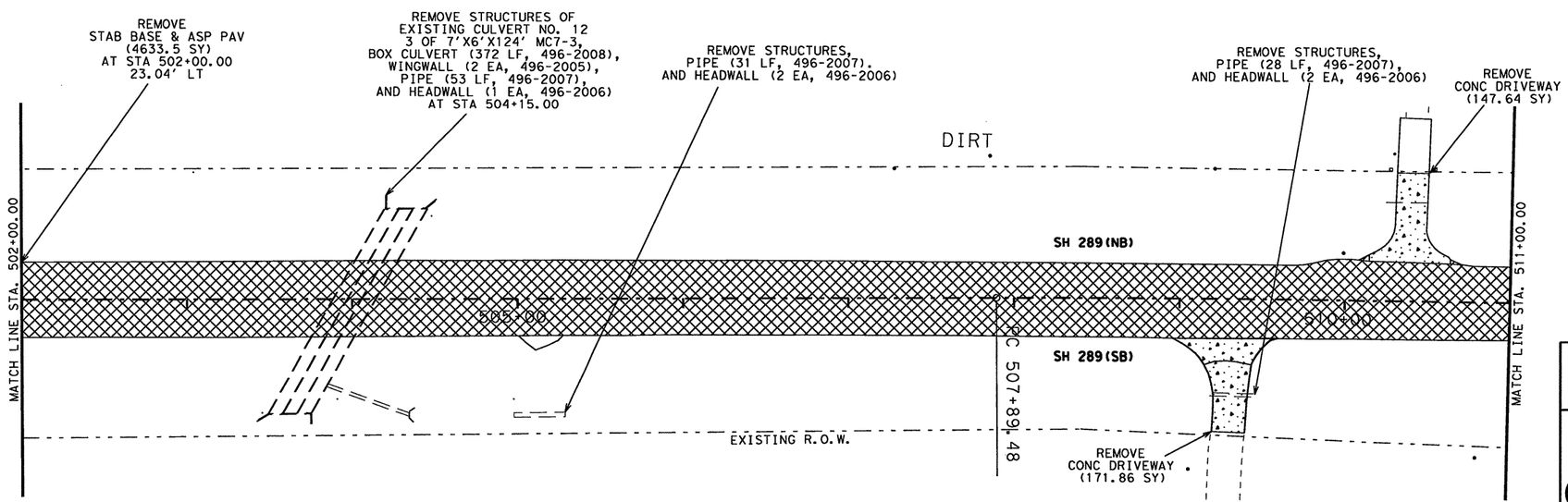

LEGEND

- SIGN TO BE REMOVED
- REMOVAL OF STABILIZED BASE & ASPHALT PAVEMENT (8"-20") (105-2061)
- REMOVAL OF CONCRETE PAVEMENT (104-2001)
- REMOVAL OF CONCRETE DRIVEWAY (104-2017)
- REMOVAL OF CONCRETE RIPRAP (104-2009)

NOTES:

1. SEE CULVERT LAYOUTS FOR REPLACING BACK THE CULVERTS.
2. SEE DRAINAGE REMOVAL SHEETS FOR ITEMS NOT SHOWN HERE.
3. SEE EXISTING SOIL BORING DATA SHEETS FOR DETAILS OF EXISTING PAVEMENT DEPTHS.

Texas Department of Transportation © 2011

SH 289
REMOVAL ITEMS LAYOUT
(STA 492+00 TO STA 511+00)

SCALE: 1" = 80'

SHEET 11 OF 12

DESIGN	FED. RD. DIV. NO.	STATE PROJECT NO.		HIGHWAY NO.
HJL	6	C 91-4-55		SH 289
GRAPHICS HJL	STATE	DISTRICT	COUNTY	SHEET NO.
CHECK NVS	TEXAS	18	COLLIN	139
CHECK NVS	CONTROL	SECTION	JOB	
	0091	04	055	

R-201104-01

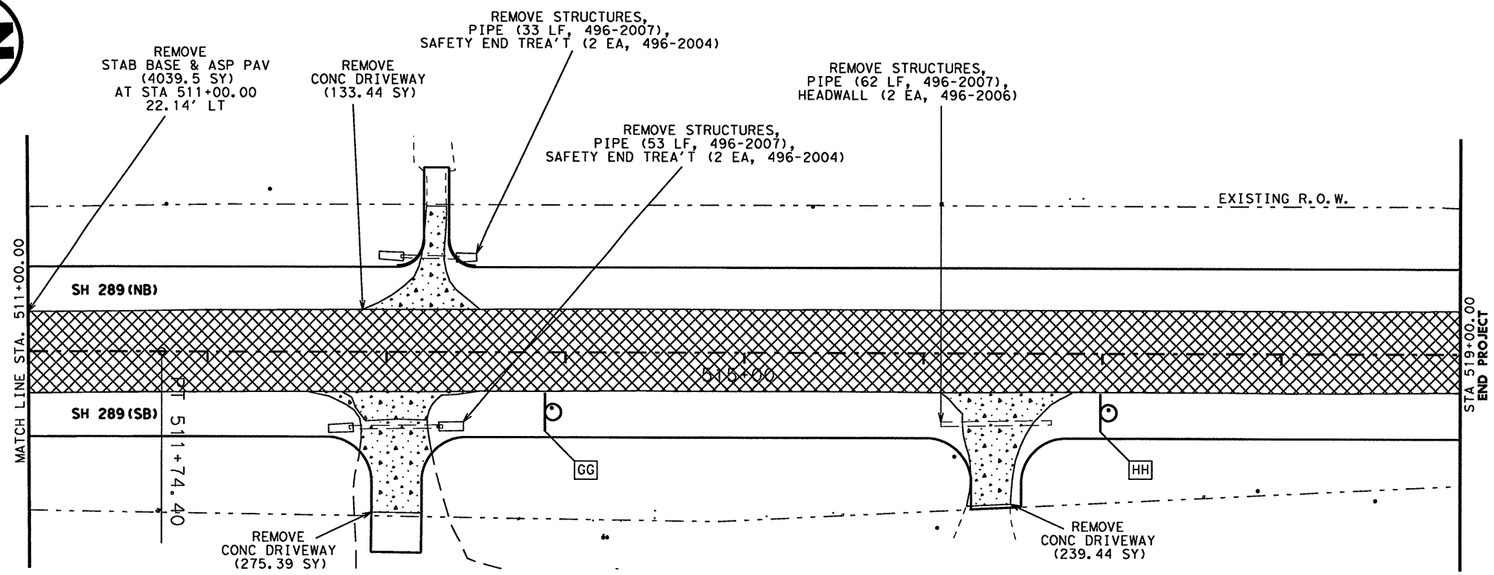

STATE OF TEXAS
NICHOLAS VON SPENCER
93702
LICENSED PROFESSIONAL ENGINEER

Signature of Registrant & Date: , P.E. 4-7-11

LEGEND

- SIGN TO BE REMOVED
- REMOVAL OF STABILIZED BASE & ASPHALT PAVEMENT (8"-20") (105-2061)
- REMOVAL OF CONCRETE PAVEMENT (104-2001)
- REMOVAL OF CONCRETE DRIVEWAY (104-2017)
- REMOVAL OF CONCRETE RIPRAP (104-2009)

NOTES:

1. SEE CULVERT LAYOUTS FOR REPLACING BACK THE CULVERTS.
2. SEE DRAINAGE REMOVAL SHEETS FOR ITEMS NOT SHOWN HERE.
3. SEE EXISTING SOIL BORING DATA SHEETS FOR DETAILS OF EXISTING PAVEMENT DEPTHS.

REMOVAL SIGN LEGEND

JCT
BUSINESS 289
FARM 5 ROAD
GG HH

Texas Department of Transportation © 2011

SH 289 REMOVAL ITEMS LAYOUT (STA 511+00 TO STA 519+00)

SCALE: 1"= 80' SHEET 12 OF 12

DESIGN	FED. RD. DIV. NO.	STATE PROJECT NO.			HIGHWAY NO.
HJL	6	C 91-4-55			SH 289
GRAPHICS HJL	STATE	DISTRICT	COUNTY		SHEET NO.
CHECK NVS	TEXAS	18	COLLIN		140
CHECK NVS	CONTROL	SECTION	JOB		
	0091	04	055		

NAD 83 SURFACE COORDINATES			
BORING NUMBER	NORTH	EAST	ELEV
15A	7151422.898	2493313.640	673.487
15B	7150722.205	2493319.576	675.119
17A	7154340.346	2493312.154	682.709
18A	7156883.919	2493294.624	679.501
19A	7157503.213	2493288.072	677.686
20A	7160188.346	2493248.824	680.100
20B	7159234.968	2493258.206	684.014
20C	7158391.211	2493281.417	682.324
21A	7160708.102	2493235.756	677.970
22A	7162919.983	2493231.228	683.433
22B	7161781.850	2493211.921	679.403
24A	7166527.223	2494312.994	698.131
24B	7166008.523	2494136.844	698.377
24C	7165006.328	2493790.931	698.890
27A	7169528.472	2495332.078	710.235

BORING NUMBER	TOTAL DEPTH INCLUDING PAVEMENT CORE	PAVEMENT CORE DEPTH	
	(FT)	HMAC (IN)	BASE (IN)
15A	12.0	10.5	4.0
15B	10.0	10.5	6.5
17A	10.0	9 3/8	4 5/8
18A	10.0	9.0	7.0
19A	10.0	9 5/8	10.0
20A	10.0	10.5	8.0
20B	10.0	9.5	8.0
20C	12.0	9.5	9 1/8
21A	10.0	9.5	8.0
22A	10.0	8.5	3.5
22B	10.0	9.5	8.5
24A	12.0	12 5/8	
24B	15.0	8 5/8	6.0
24C	10.0	8.75	8.25
27A	12.0	8.5	

NOTES:

1. SOIL BORING DATA IS PRESENTED FOR CONTRACTOR'S INFORMATION ONLY IN ORDER TO PROVIDE MORE DETAILED INFORMATION ON EXISTING SOIL DEPTHS FOR REMOVAL EFFORTS.

2. PLOT OF BORING LOCATIONS CAN BE SEEN ON PLAN AND PROFILE SHEETS

STATE OF TEXAS
NICHOLAS VON SPENCER
93702
LICENSED
PROFESSIONAL ENGINEER

Nicholas Von Spencer, P.E. 4-7-11
Signature of Registrant & Date

Texas Department of Transportation
© 2011

SH 289 EXISTING SOIL BORING DATA SHEET

SHEET 1 OF 1

DESIGN	FED. RD. DIV. NO.	STATE PROJECT NO.		HIGHWAY NO.
AMW	6	(SEE TITLE SHEET)		SH 289
GRAPHICS AMW	STATE	DISTRICT	COUNTY	SHEET NO.
CHECK NVS	TEXAS	DALLAS	COLLIN	141
CHECK NVS	CONTROL 0091	SECTION 04	JOB 055	

T:\DALDGN*A\SH 289 Celina\THE PLANS\Existing Soil Boring Data\soil boring data sheet.dgn 4/7/2011 1:02:04 PM

NOTES:

1. SOME OPERATIONS MAY REQUIRE COORDINATION WITH ADJACENT CONTRACTORS CONSTRUCTING THE 0091-04-050 AND 0091-03-021 PROJECTS.

2. TEMPORARY DETOUR TO BE BUILT AT THE CONCLUSION OF THE PROJECT TO PROVIDE LANE TRANSITION UNTIL THE 0091-03-021 PROJECT IS BUILT BY OTHERS.

3. NOTE THAT THE 0091-03-021 PROJECT MAY NOT BE COMPLETED AT THE SAME TIME AND WILL REQUIRE THE TEMPORARY DETOUR.

4. SEE ROADWAY SUMMARY SHEET FOR PAYMENT.

* FOR CONTRACTORS INFORMATION ONLY. SUBSIDIARY TO ITEM 508

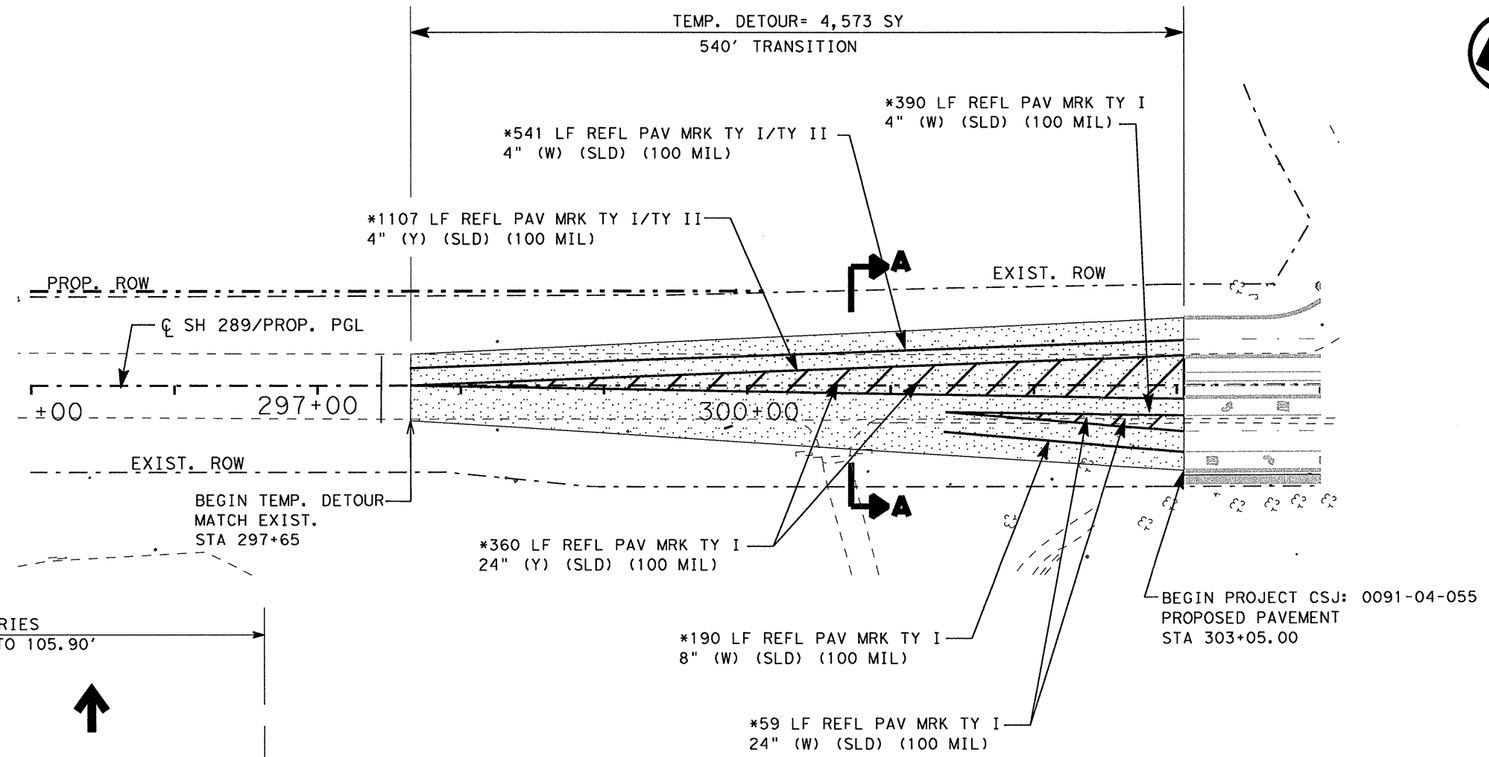

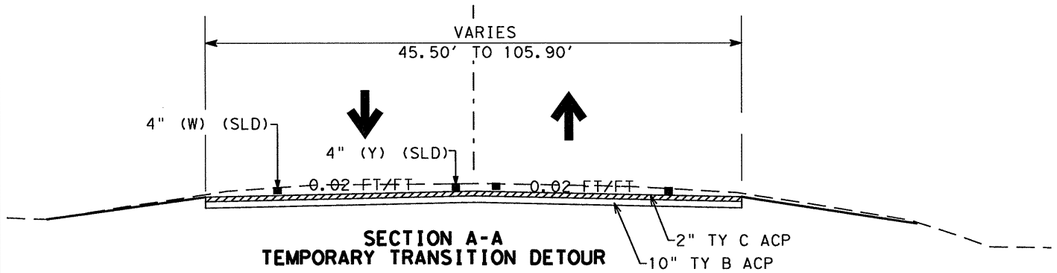

SECTION A-A
TEMPORARY TRANSITION DETOUR

DESIGN SPEED : 45 MPH
TRAFFIC EXISTING: 20,100 ADT YEAR 2010
PROJECTED : 31,000 ADT YEAR 2030
FUNCTIONAL CLASS: URBAN PRINCIPAL ARTERIAL

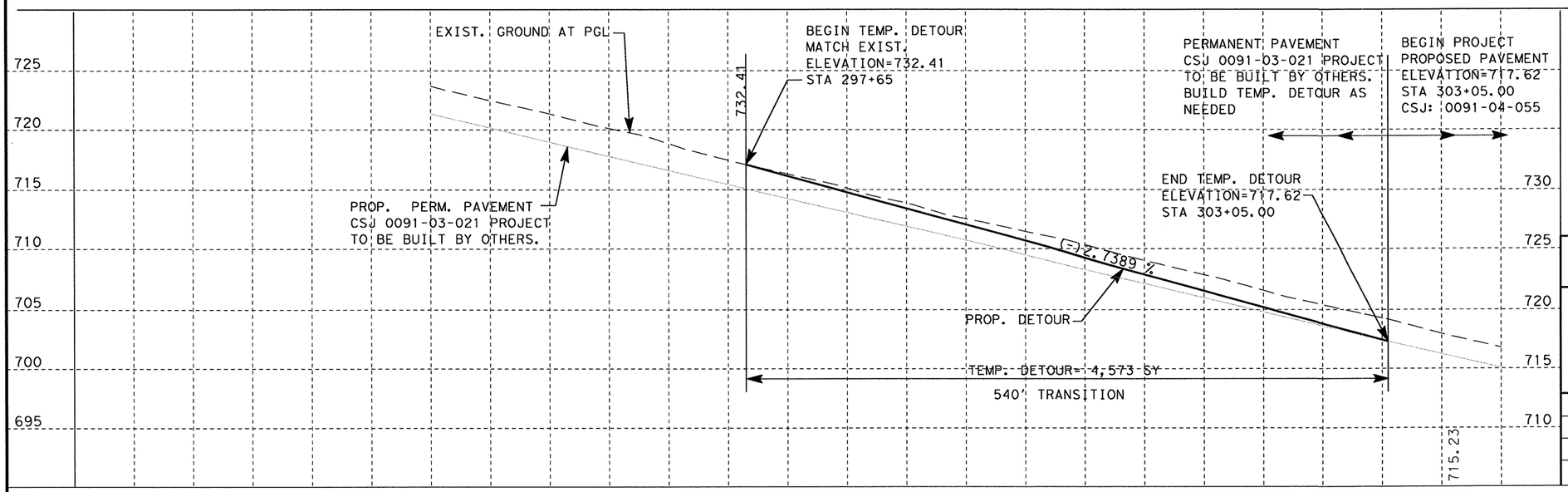

STATE OF TEXAS
NICHOLAS VON SPENCER
93702
LICENSED PROFESSIONAL ENGINEER

Signature of Registrant & Date, P.E. 5-25-11

Texas Department of Transportation
© 2011

SH 289 TEMPORARY ASPHALT DETOUR

SCALE: V: 1"=10' H: 1"=100'

DESIGN	FED. RD. DIV. NO.	STATE PROJECT NO.		HIGHWAY NO.
NVS	6	(SEE TITLE SHEET)		SH 289
GRAPHICS NVS	STATE	DISTRICT	COUNTY	SHEET NO.
CHECK NVS	TEXAS	DALLAS	COLLIN	142
CHECK	CONTROL	SECTION	JOB	
	0091	04	055	

T:\DALDGN#A\SH 289 Celina\THE PLANS\Plan & Profile\021 Pavement Transition.dgn

R-201104-01

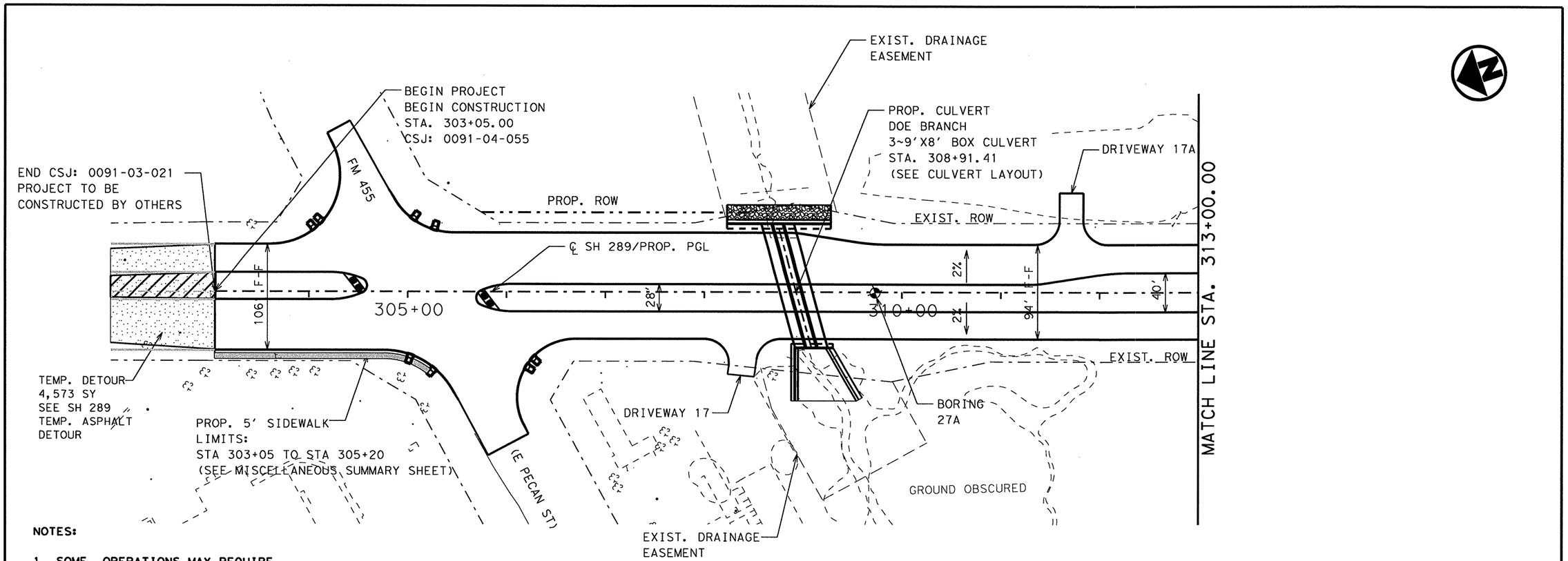

NOTES:

1. SOME OPERATIONS MAY REQUIRE COORDINATION WITH ADJACENT CONTRACTORS CONSTRUCTING THE 0091-04-050 AND 0091-03-021 CSJ PROJECTS.

DESIGN SPEED : 45 MPH
TRAFFIC EXISTING: 20,100 ADT YEAR 2010
PROJECTED : 31,000 ADT YEAR 2030
FUNCTIONAL CLASS: URBAN PRINCIPAL ARTERIAL

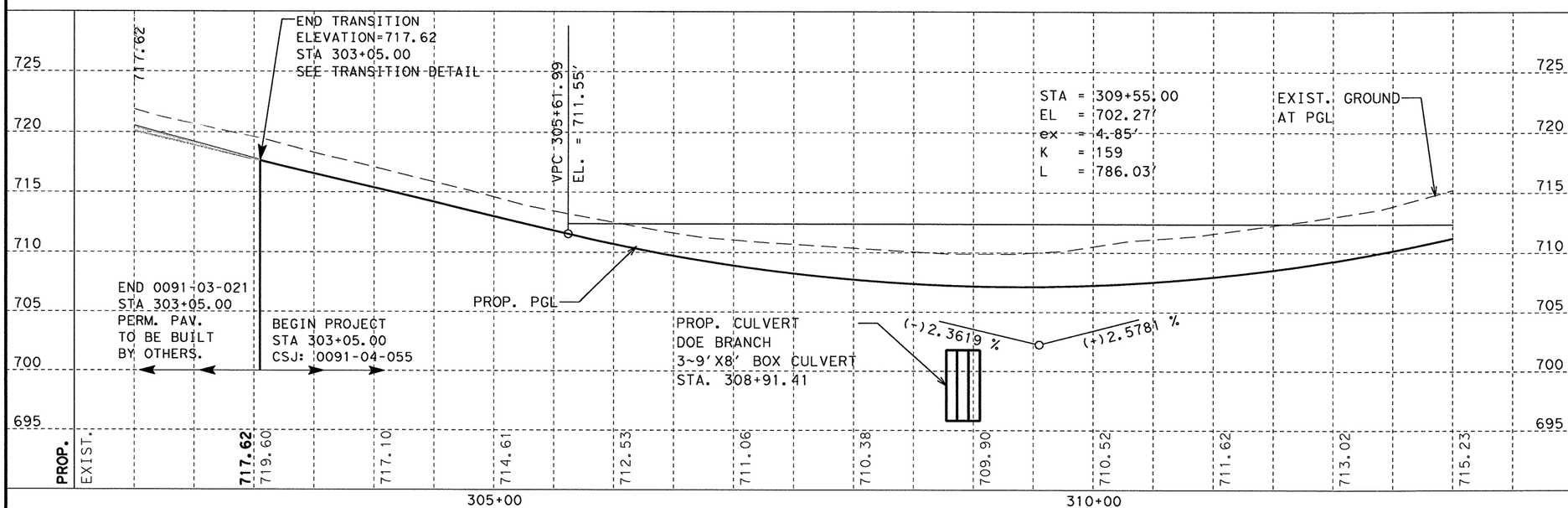

STATE OF TEXAS
NICHOLAS VON SPENCER
93702
LICENSED PROFESSIONAL ENGINEER

Signature of Registrant & Date, P.E. 5-25-11

Texas Department of Transportation
© 2011

SH 289
PLAN & PROFILE

BEGIN STA. 303+05
TO STA. 313+00

SCALE: V: 1"=10' H: 1"=100' SHEET 1 OF 20

DESIGN	FED. RD. DIV. NO.	STATE PROJECT NO.		HIGHWAY NO.
AMW	6	(SEE TITLE SHEET)		SH 289
GRAPHICS AMW	STATE	DISTRICT	COUNTY	SHEET NO.
CHECK NVS	TEXAS	DALLAS	COLLIN	143
CHECK NVS	CONTROL 0091	SECTION 04	JOB 055	

T:\DALDGN\A\SH 289 Collin\THE PLANS\Plan & Profile\PlanProfile 1.dgn

R-201104-01

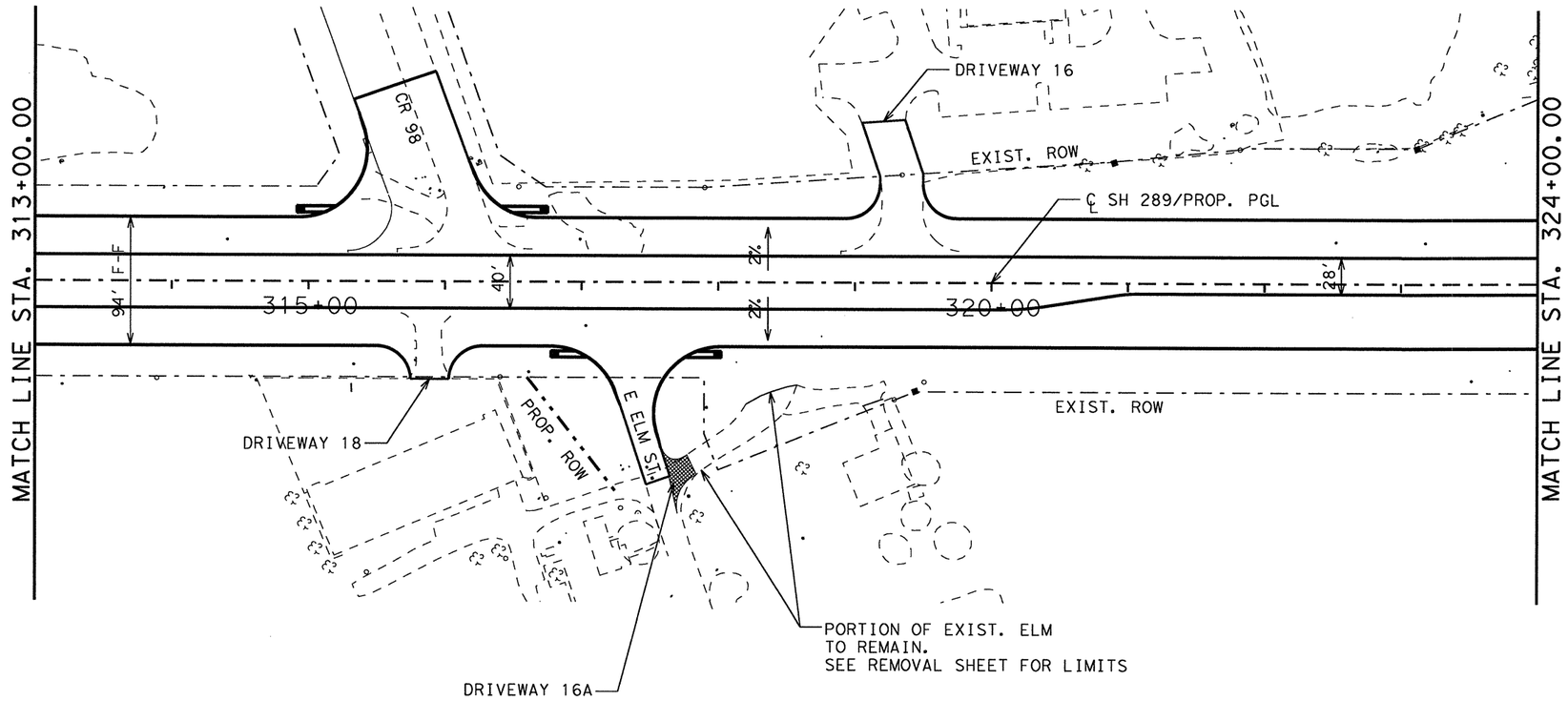

DESIGN SPEED : 45 MPH
TRAFFIC EXISTING: 20,100 ADT YEAR 2010
PROJECTED : 31,000 ADT YEAR 2030
FUNCTIONAL CLASS: URBAN PRINCIPAL ARTERIAL

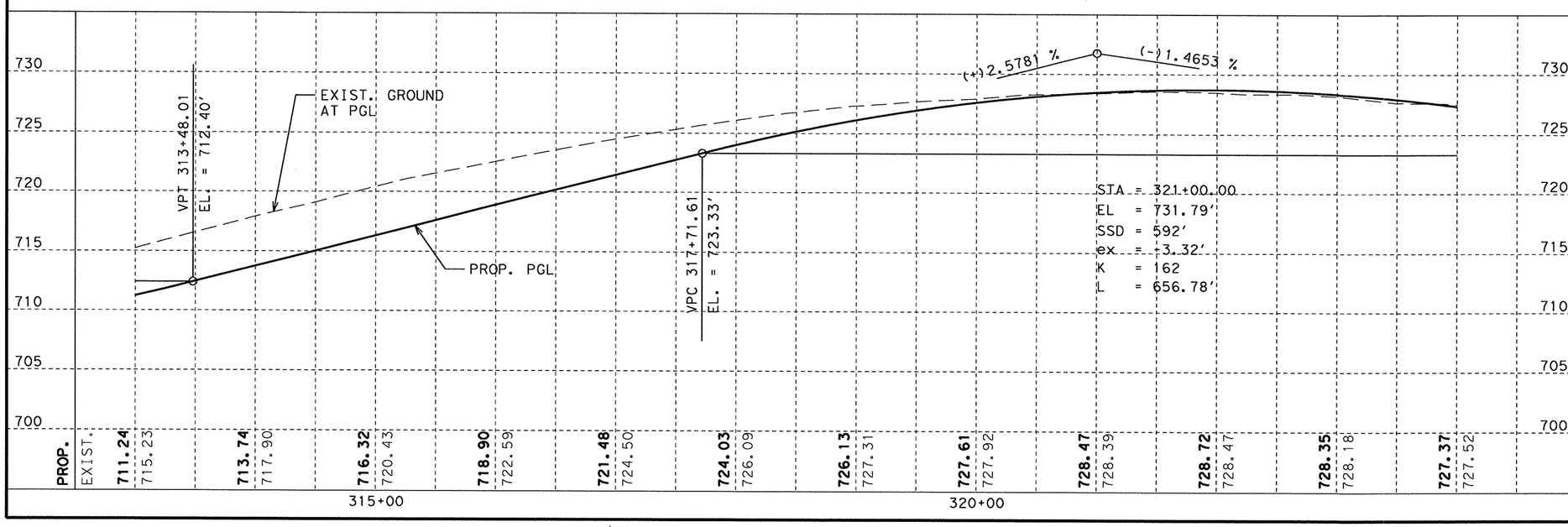

STATE OF TEXAS
NICHOLAS VON SPENCER
93702
LICENSED
PROFESSIONAL ENGINEER

Signature of Registrant & Date, P.E. 5-26-11

Texas Department of Transportation
© 2011

SH 289
PLAN & PROFILE

STA. 313+00 TO STA. 324+00

SCALE: V: 1"=10' H: 1"=100' SHEET 2 OF 20

DESIGN	FED. RD. DIV. NO.	STATE PROJECT NO.		HIGHWAY NO.
AMW	6	(SEE TITLE SHEET)		SH 289
GRAPHICS	STATE	DISTRICT	COUNTY	SHEET NO.
AMW	TEXAS	DALLAS	COLLIN	144
CHECK	CONTROL	SECTION	JOB	
NVS	0091	04	055	
CHECK				
NVS				

T:\DALDGN*A\SH 289 Celina\THE PLANS\Plan & Profile\PlanProfile 2.dgn

R-201104-01

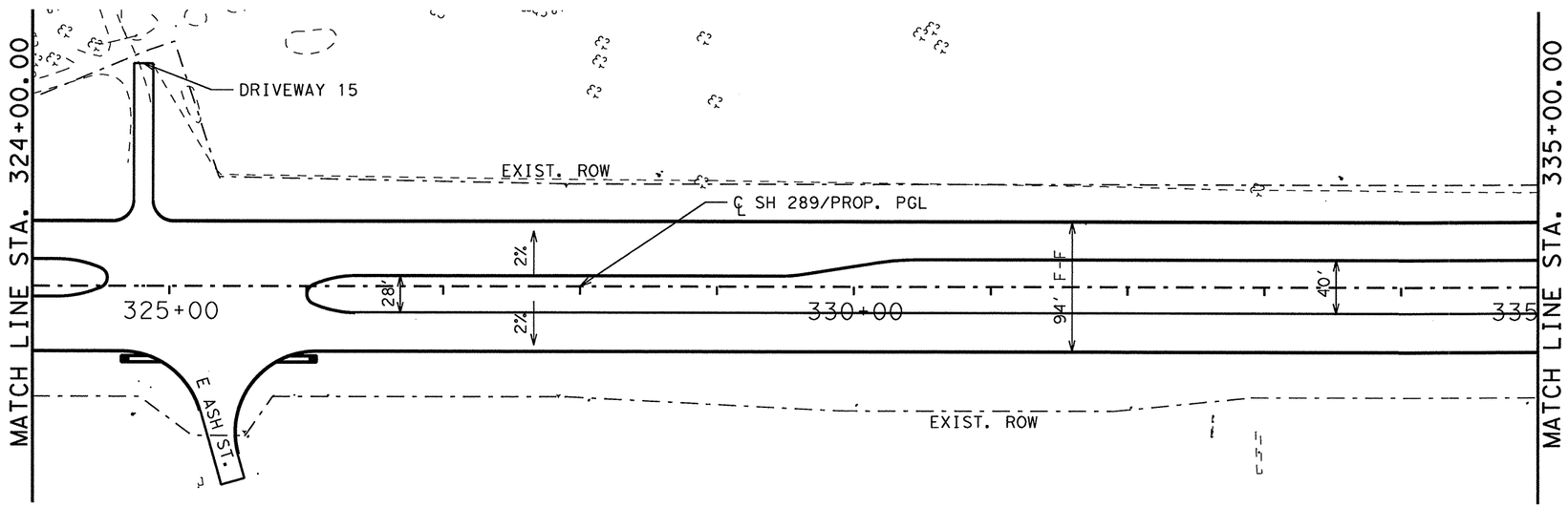

DESIGN SPEED : 45 MPH
TRAFFIC EXISTING: 20,100 ADT YEAR 2010
PROJECTED : 31,000 ADT YEAR 2030
FUNCTIONAL CLASS: URBAN PRINCIPAL ARTERIAL

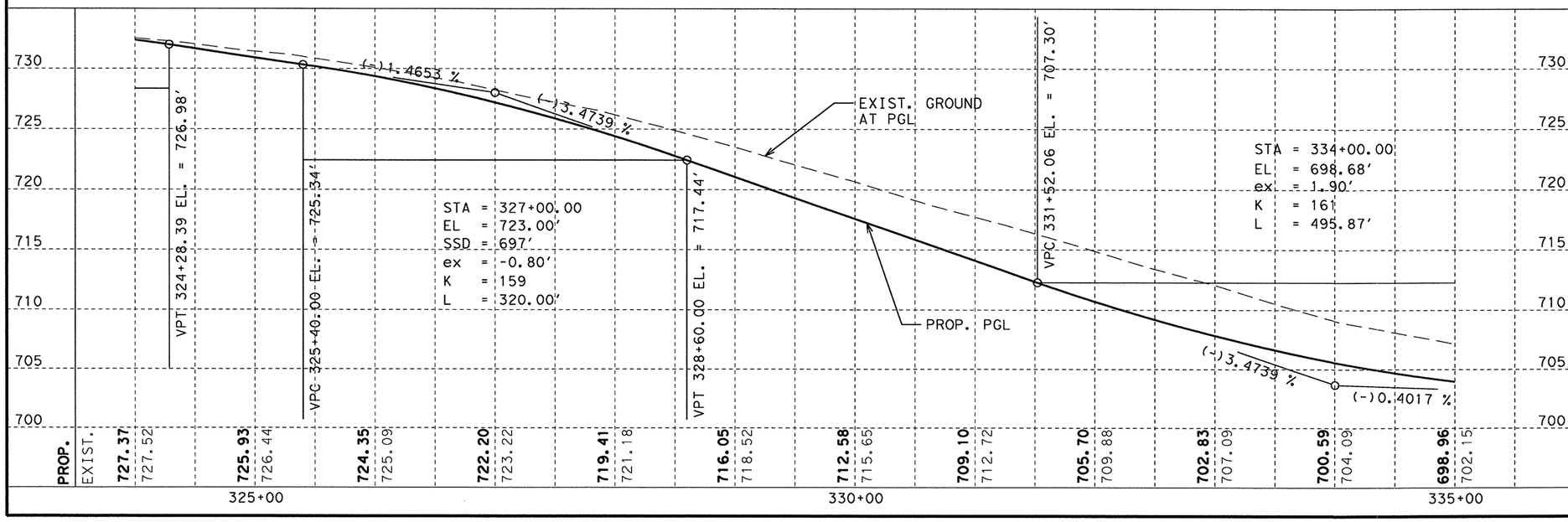

STATE OF TEXAS
NICHOLAS VON SPENCER
93702
LICENSED PROFESSIONAL ENGINEER

Signature of Registrant , P.E. & Date 5-25-11

Texas Department of Transportation © 2011

SH 289
PLAN & PROFILE
STA. 324+00 TO STA. 335+00

SCALE: V: 1"=10' H: 1"=100' SHEET 3 OF 20

DESIGN	FED. RD. DIV. NO.	STATE PROJECT NO.		HIGHWAY NO.
AMW	6	(SEE TITLE SHEET)		SH 289
GRAPHICS AMW	STATE	DISTRICT	COUNTY	SHEET NO.
CHECK NVS	TEXAS	DALLAS	COLLIN	145
CHECK NVS	CONTROL 0091	SECTION 04	JOB 055	

T:\DALDGN*A\SH 289 Celina\THE PLANS\Plan & Profile\PlanProfile 3.dgn

5/15/2011

R-201104-01

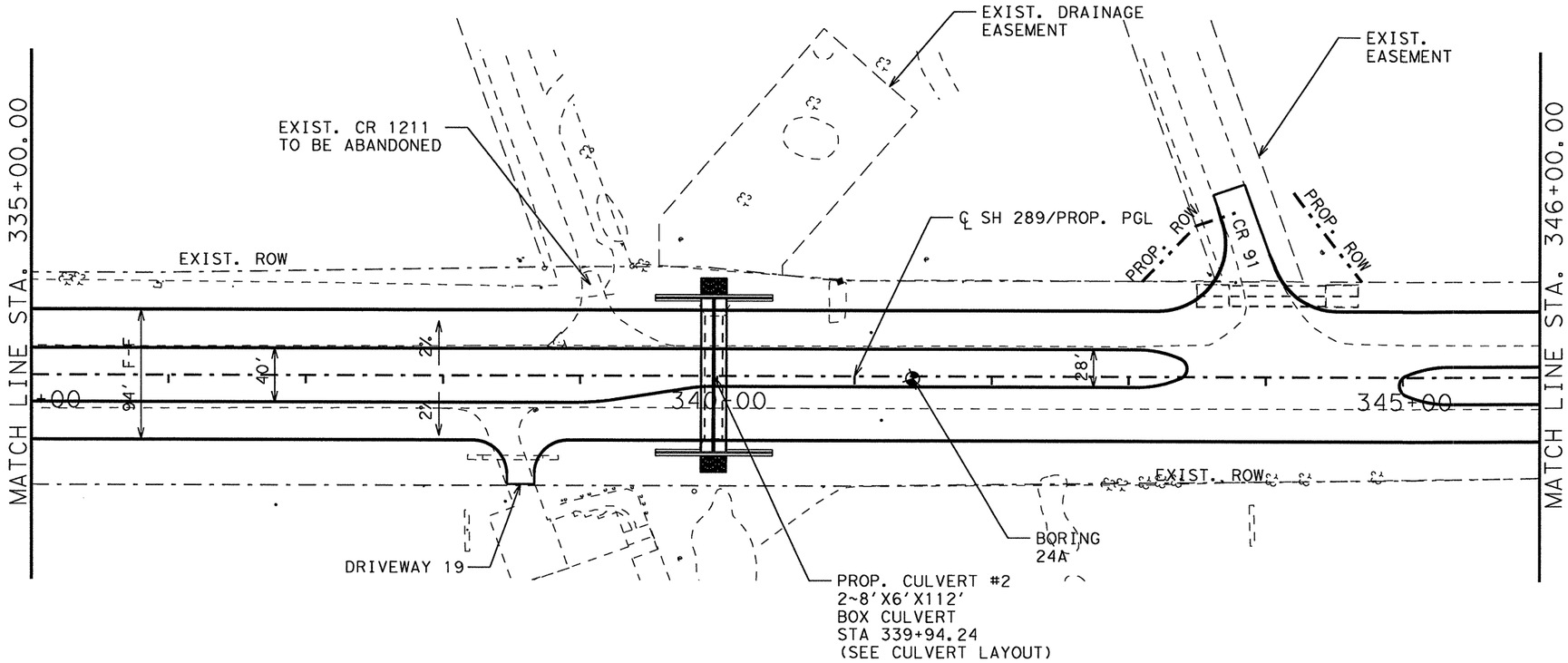

NOTES:
STA 338+00.00 TO STA 440+00.00: EXISTING SOIL HAS HIGH SULFATE CONCENTRATIONS. THIS SECTION IS NOT SUITABLE FOR LIME TREATMENT. (SEE TYPICAL SECTIONS)

DESIGN SPEED : 45 MPH
TRAFFIC EXISTING: 20,100 ADT YEAR 2010
PROJECTED : 31,000 ADT YEAR 2030
FUNCTIONAL CLASS: URBAN PRINCIPAL ARTERIAL

1 Replaced 6/29/11 JB

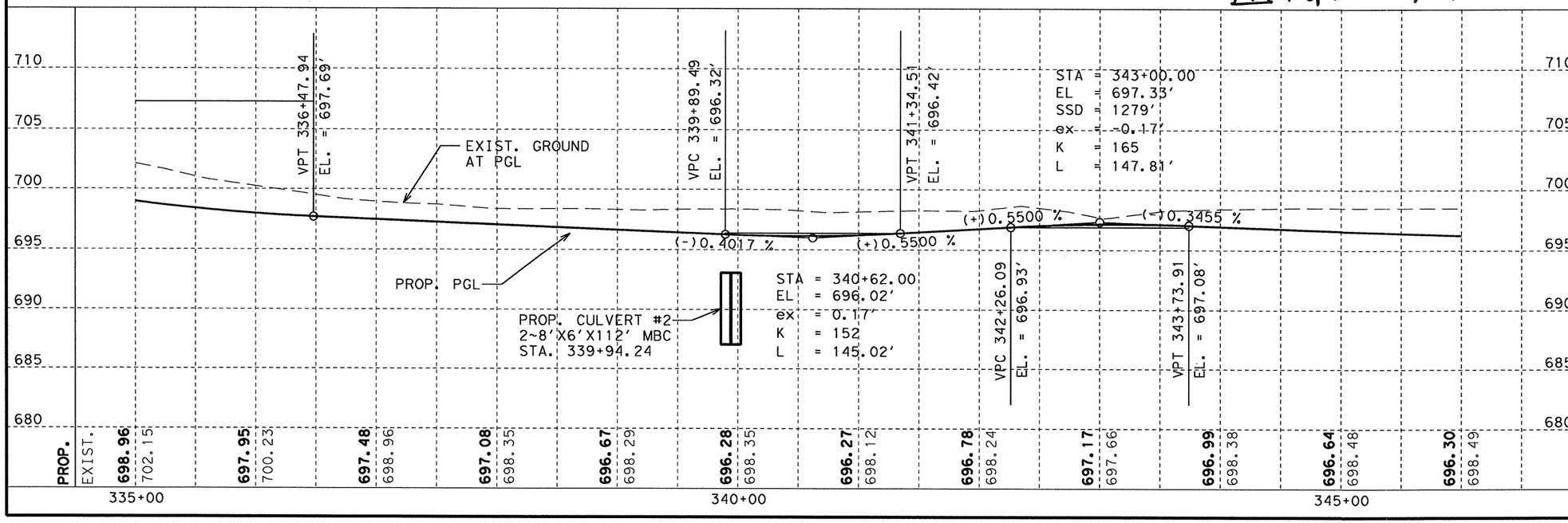

STATE OF TEXAS
NICHOLAS VON SPENCER
93702
LICENSED PROFESSIONAL ENGINEER

Signature of Registrant & Date, P.E. 6-27-11

Texas Department of Transportation
© 2011

SH 289
PLAN & PROFILE
STA. 335+00 TO STA. 346+00

SCALE: V: 1"=10' H: 1"=100' SHEET 4 OF 20

DESIGN	FED. RD. DIV. NO.	STATE PROJECT NO.		HIGHWAY NO.
AMW	6	(SEE TITLE SHEET)		SH 289
GRAPHICS	STATE	DISTRICT	COUNTY	SHEET NO.
AMW	TEXAS	DALLAS	COLLIN	146
CHECK	CONTROL	SECTION	JOB	
NVS	0091	04	055	
CHECK NVS				

T:\DALDGN*A\SH 289 Celina\THE PLANS\Plan & Profile\PlanProfile 4.dgn

R-201104-01

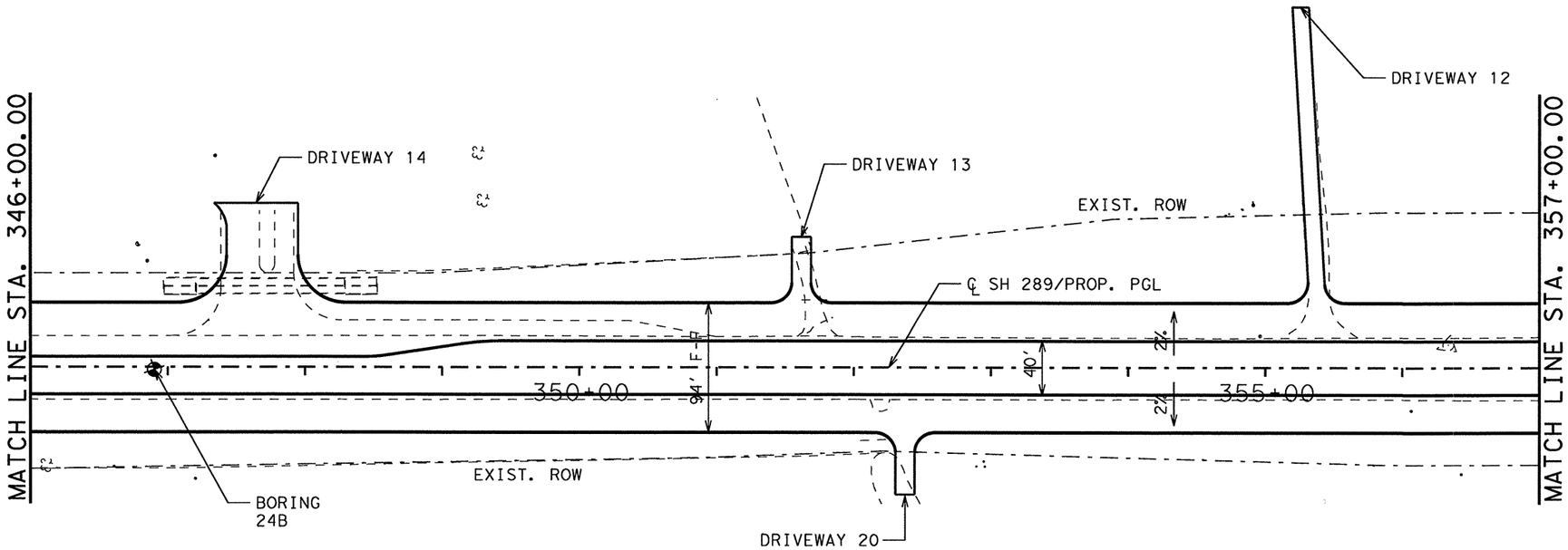

NOTES:
STA 338+00.00 TO STA 440+00.00: EXISTING SOIL HAS HIGH SULFATE CONCENTRATIONS. THIS SECTION IS NOT SUITABLE FOR LIME TREATMENT. (SEE TYPICAL SECTIONS)

DESIGN SPEED : 45 MPH
TRAFFIC EXISTING: 20,100 ADT YEAR 2010
PROJECTED : 31,000 ADT YEAR 2030
FUNCTIONAL CLASS: URBAN PRINCIPAL ARTERIAL

△1 Replaced 6/29/11 JB

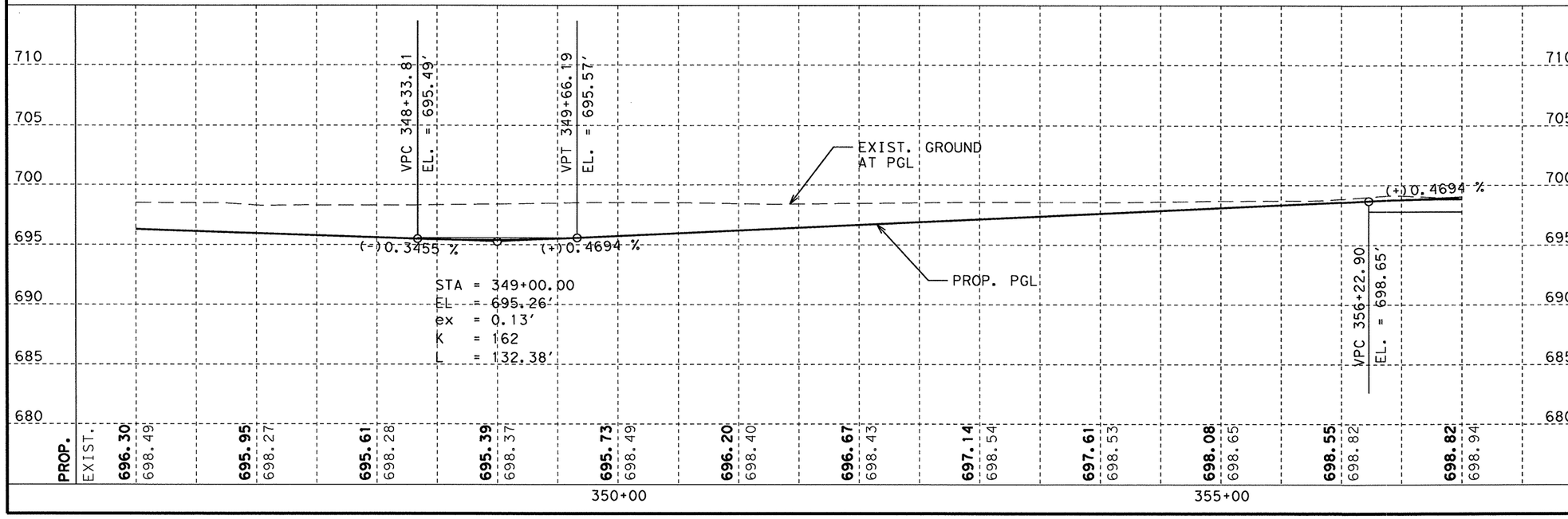

STATE OF TEXAS
NICHOLAS VON SPENCER
93702
LICENSED PROFESSIONAL ENGINEER

Signature of Registrant & Date, P.E. 6-27-11

Texas Department of Transportation
© 2011

SH 289
PLAN & PROFILE
STA. 346+00 TO STA. 357+00

SCALE: V: 1"=10' H: 1"=100' SHEET 5 OF 20

DESIGN	FED. RD. DIV. NO.	STATE PROJECT NO.		HIGHWAY NO.
AMW	6	(SEE TITLE SHEET)		SH 289
GRAPHICS AMW	STATE	DISTRICT	COUNTY	SHEET NO.
CHECK NVS	TEXAS	DALLAS	COLLIN	147
CHECK NVS	CONTROL 0091	SECTION 04	JOB 055	

T:\DALDGN*A\SH 289 Celina\THE PLANS\Plan & Profile\PlanProfile 5.dgn

6/24/2011

R-201104-01

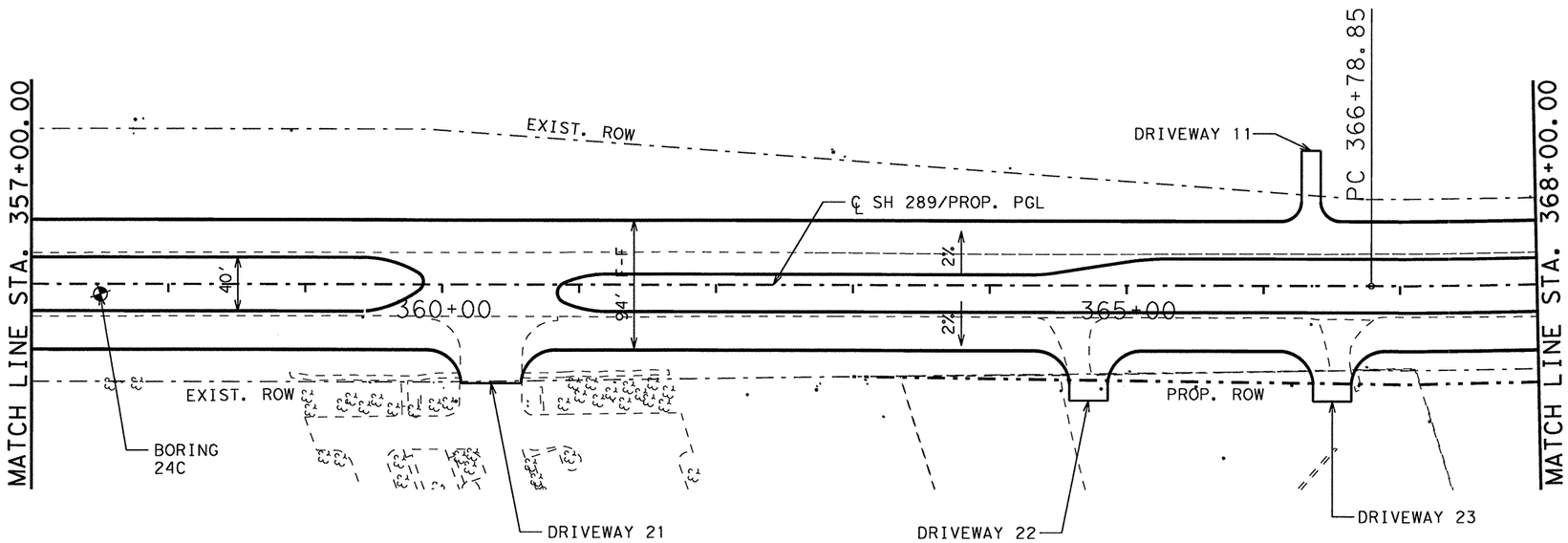

NOTES:
STA 338+00.00 TO STA 440+00.00: EXISTING SOIL HAS HIGH SULFATE CONCENTRATIONS. THIS SECTION IS NOT SUITABLE FOR LIME TREATMENT. (SEE TYPICAL SECTIONS)

DESIGN SPEED : 45 MPH
TRAFFIC EXISTING: 20,100 ADT YEAR 2010
PROJECTED : 31,000 ADT YEAR 2030
FUNCTIONAL CLASS: URBAN PRINCIPAL ARTERIAL

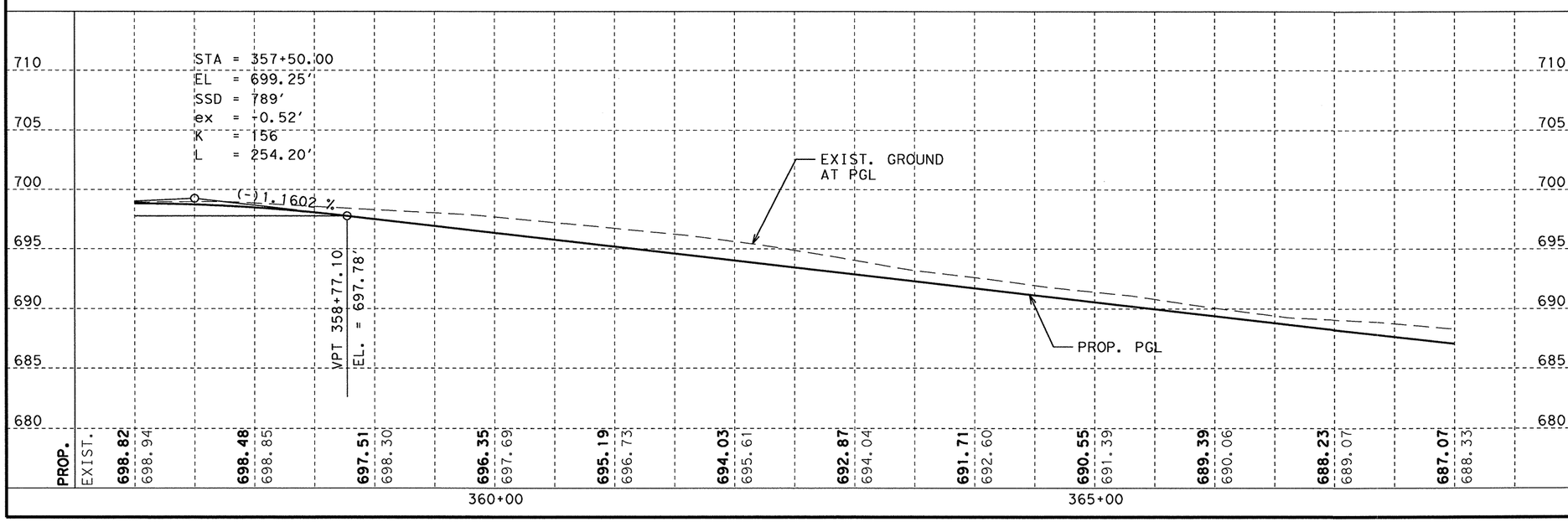

STATE OF TEXAS
NICHOLAS VON SPENCER
93702
LICENSED
PROFESSIONAL ENGINEER

Signature of Registrant & Date, P.E. 5-25-11

Texas Department of Transportation
© 2011

SH 289
PLAN & PROFILE
STA. 357+00 TO STA. 368+00

SCALE: V: 1"=10' H: 1"=100' SHEET 6 OF 20

DESIGN	FED. RD. DIV. NO.	STATE PROJECT NO.		HIGHWAY NO.
AMW	6	(SEE TITLE SHEET)		SH 289
GRAPHICS	STATE	DISTRICT	COUNTY	SHEET NO.
AMW	TEXAS	DALLAS	COLLIN	148
CHECK	CONTROL	SECTION	JOB	
NVS	0091	04	055	
CHECK NVS				

T:\DALDGN*A\SH 289 Celina\THE PLANS\Plan & Profile\PlanProfile 6.dgn

R-201104-01

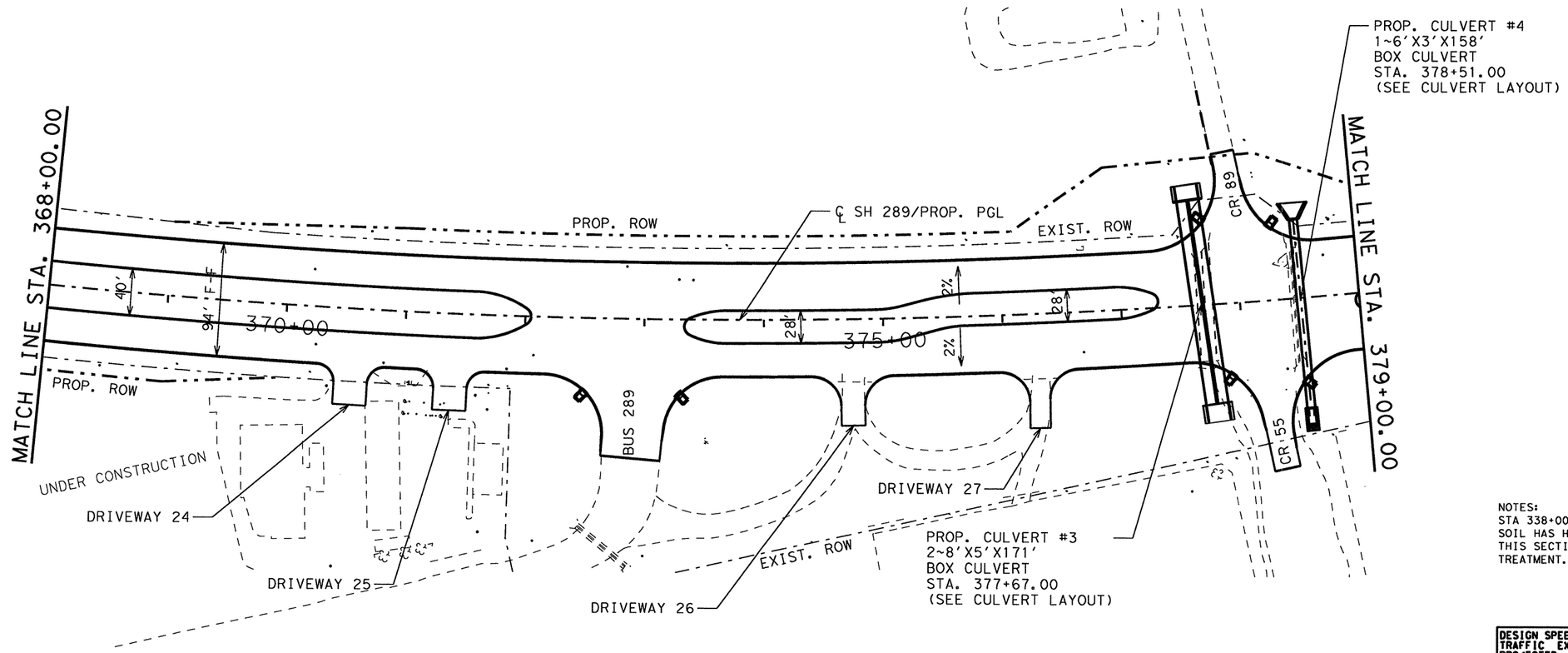

NOTES:
STA 338+00.00 TO STA 440+00.00: EXISTING SOIL HAS HIGH SULFATE CONCENTRATIONS. THIS SECTION IS NOT SUITABLE FOR LIME TREATMENT. (SEE TYPICAL SECTIONS)

DESIGN SPEED : 45 MPH
TRAFFIC EXISTING: 20,100 ADT YEAR 2010
PROJECTED : 31,000 ADT YEAR 2030
FUNCTIONAL CLASS: URBAN PRINCIPAL ARTERIAL

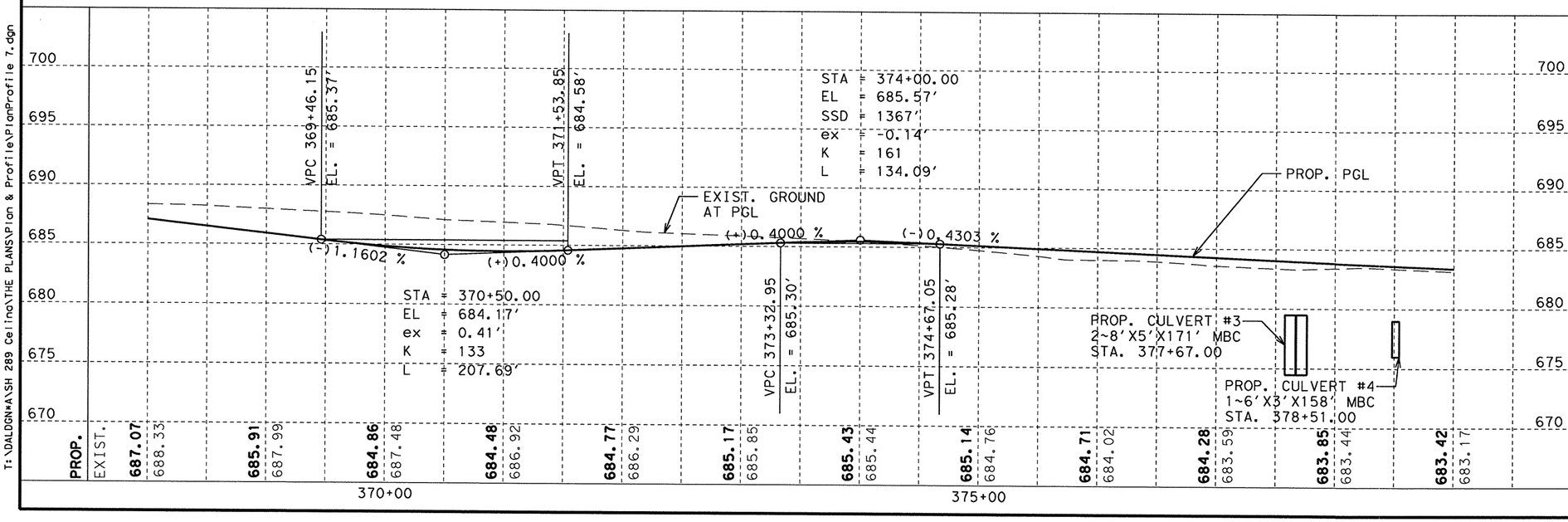

STATE OF TEXAS
NICHOLAS VON SPENCER
93702
LICENSED PROFESSIONAL ENGINEER

Signature of Registrant & Date, P.E. 5-25-11

Texas Department of Transportation
© 2011

SH 289
PLAN & PROFILE
STA. 368+00 TO STA. 379+00

SCALE: V: 1"=10' H: 1"=100' SHEET 7 OF 20

DESIGN	FED. RD. DIV. NO.	STATE PROJECT NO.		HIGHWAY NO.
AMW	6	(SEE TITLE SHEET)		SH 289
GRAPHICS AMW	STATE	DISTRICT	COUNTY	SHEET NO.
CHECK NVS	TEXAS	DALLAS	COLLIN	149
CHECK NVS	CONTROL 0091	SECTION 04	JOB 055	

T:\DALDGN\#A\SH 289 Ceiling\THE PLANS\Plan & Profile\PlanProfile 7.dgn

R-201104-01

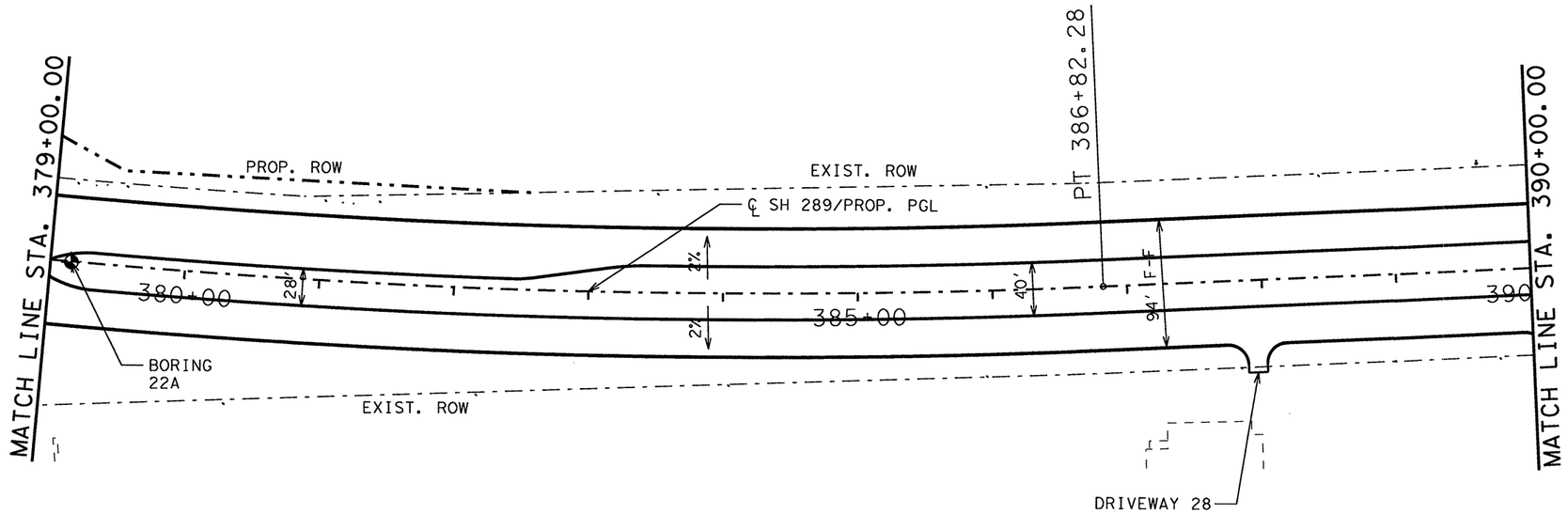

NOTES:
STA 338+00.00 TO STA 440+00.00: EXISTING SOIL HAS HIGH SULFATE CONCENTRATIONS. THIS SECTION IS NOT SUITABLE FOR LIME TREATMENT. (SEE TYPICAL SECTIONS)

DESIGN SPEED : 45 MPH
TRAFFIC EXISTING: 20,100 ADT YEAR 2010
PROJECTED : 31,000 ADT YEAR 2030
FUNCTIONAL CLASS: URBAN PRINCIPAL ARTERIAL

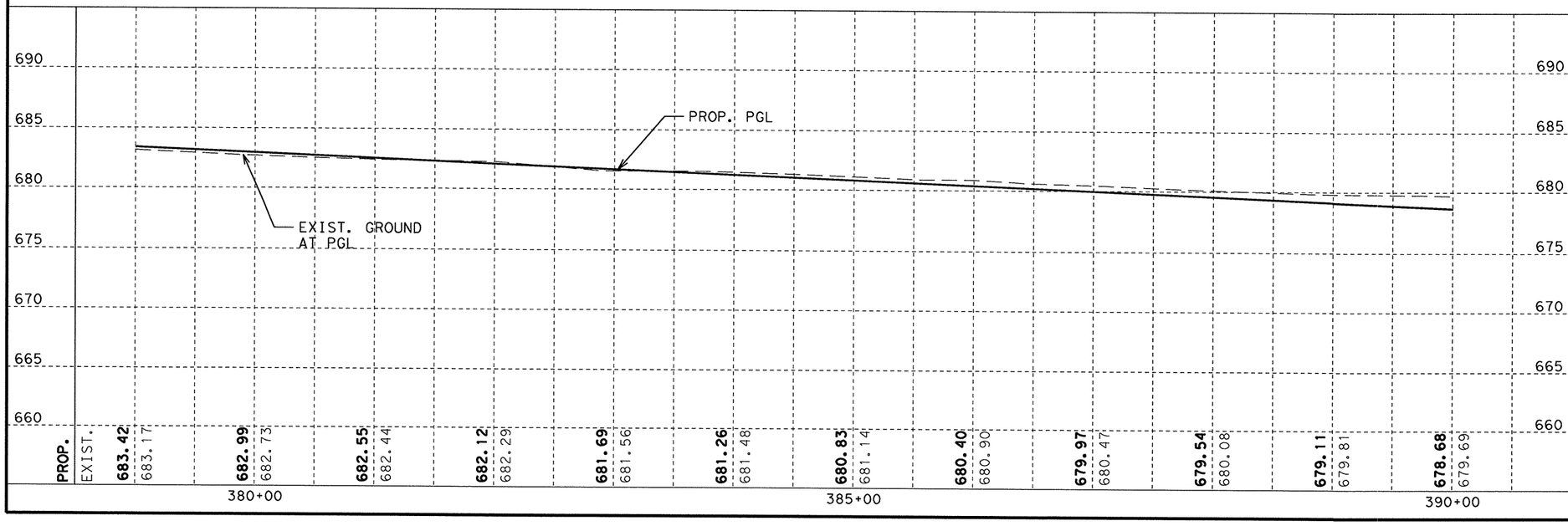

STATE OF TEXAS
NICHOLAS VON SPENCER
93702
LICENSED
PROFESSIONAL ENGINEER

Signature of Registrant & Date, P.E. 5-25-11

Texas Department of Transportation
© 2011

SH 289
PLAN & PROFILE
STA. 379+00 TO STA. 390+00

SCALE: V: 1"=10' H: 1"=100' SHEET 8 OF 20

DESIGN	FED. RD. DIV. NO.	STATE PROJECT NO.		HIGHWAY NO.
AMW	6	(SEE TITLE SHEET)		SH 289
GRAPHICS AMW	STATE	DISTRICT	COUNTY	SHEET NO.
CHECK NVS	TEXAS	DALLAS	COLLIN	150
CHECK NVS	CONTROL 0091	SECTION 04	JOB 055	

T:\DALDGN*A\SH 289 Celina\THE PLANS\Plan & Profile\PlanProfile 8.dgn

R-201104-01

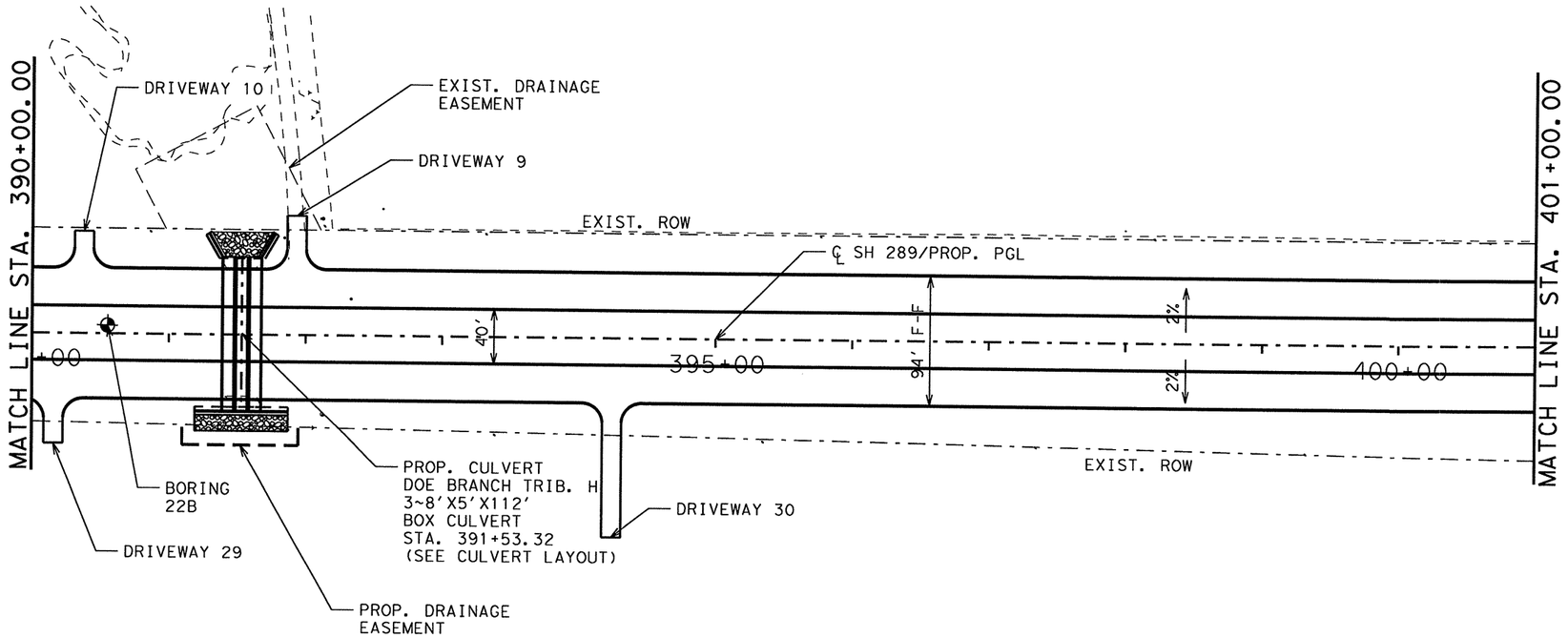

NOTES:
STA 338+00.00 TO STA 440+00.00: EXISTING SOIL HAS HIGH SULFATE CONCENTRATIONS. THIS SECTION IS NOT SUITABLE FOR LIME TREATMENT. (SEE TYPICAL SECTIONS)

DESIGN SPEED : 45 MPH
TRAFFIC EXISTING: 20,100 ADT YEAR 2010
PROJECTED : 31,000 ADT YEAR 2030
FUNCTIONAL CLASS: URBAN PRINCIPAL ARTERIAL

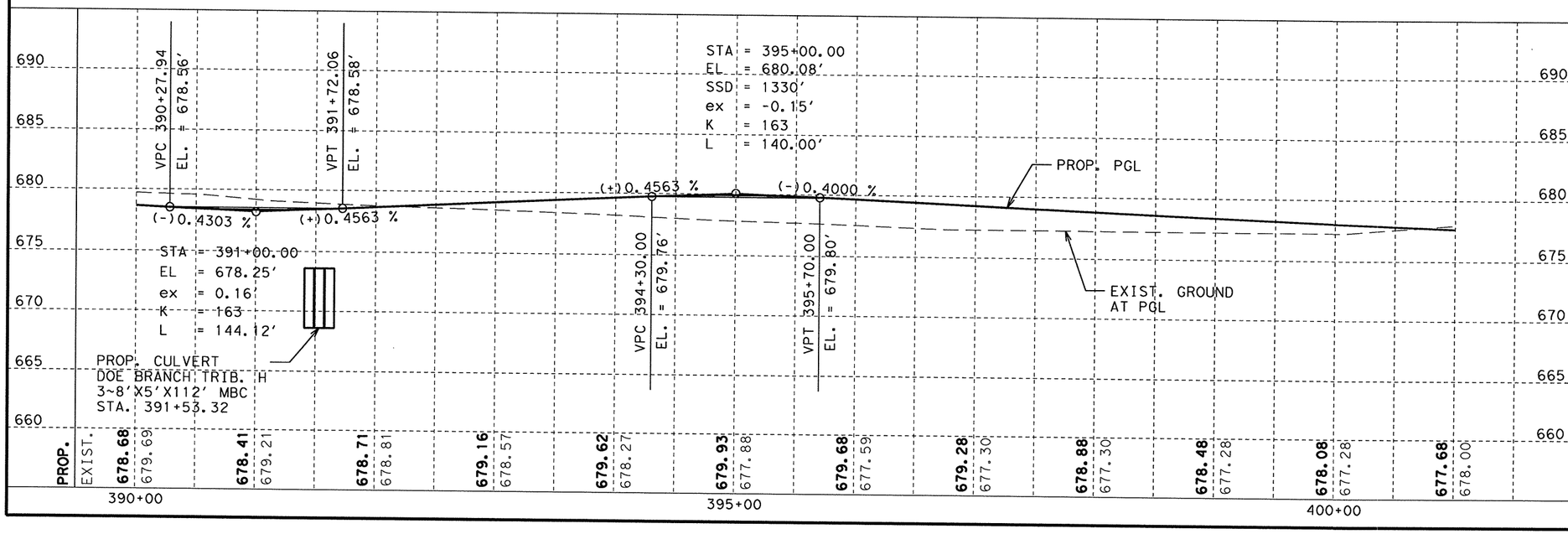

STATE OF TEXAS
NICHOLAS VON SPENCER
93702
LICENSED PROFESSIONAL ENGINEER

Signature of Registrant & Date, P.E. 5-25-11

Texas Department of Transportation
© 2011

SH 289
PLAN & PROFILE
STA. 390+00 TO STA. 401+00

SCALE: V: 1"=10' H: 1"=100' SHEET 9 OF 20

DESIGN	FED. RD. DIV. NO.	STATE PROJECT NO.		HIGHWAY NO.
AMW	6	(SEE TITLE SHEET)		SH 289
GRAPHICS	STATE	DISTRICT	COUNTY	SHEET NO.
AMW	TEXAS	DALLAS	COLLIN	151
CHECK	CONTROL	SECTION	JOB	
NVS	0091	04	055	
CHECK NVS				

T:\DALDGN*A\SH 289 Celina\THE PLANS\Plan & Profile\Plan&Profile 9.dgn

5/15/2011

R-201104-01

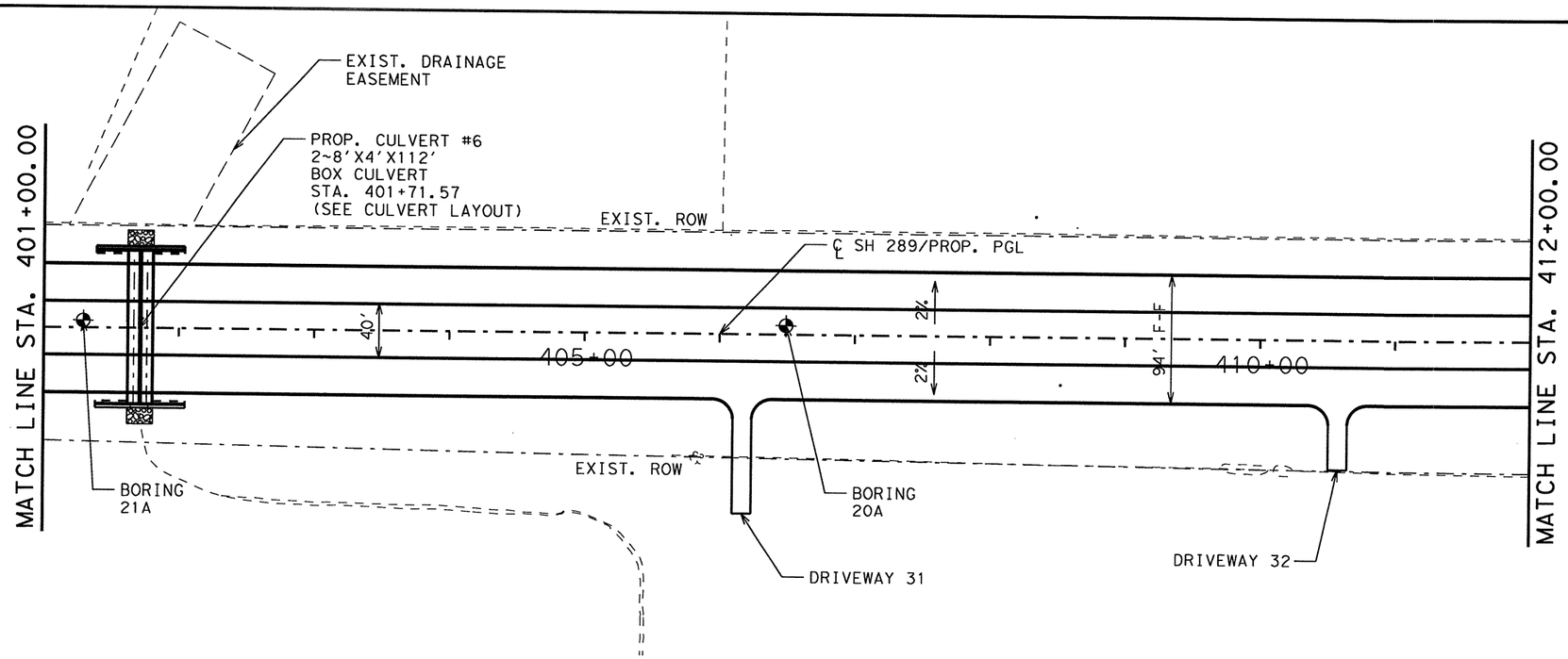

NOTES:
STA 338+00.00 TO STA 440+00.00: EXISTING SOIL HAS HIGH SULFATE CONCENTRATIONS. THIS SECTION IS NOT SUITABLE FOR LIME TREATMENT. (SEE TYPICAL SECTIONS)

DESIGN SPEED : 45 MPH
TRAFFIC EXISTING: 20,100 ADT YEAR 2010
PROJECTED : 31,000 ADT YEAR 2030
FUNCTIONAL CLASS: URBAN PRINCIPAL ARTERIAL

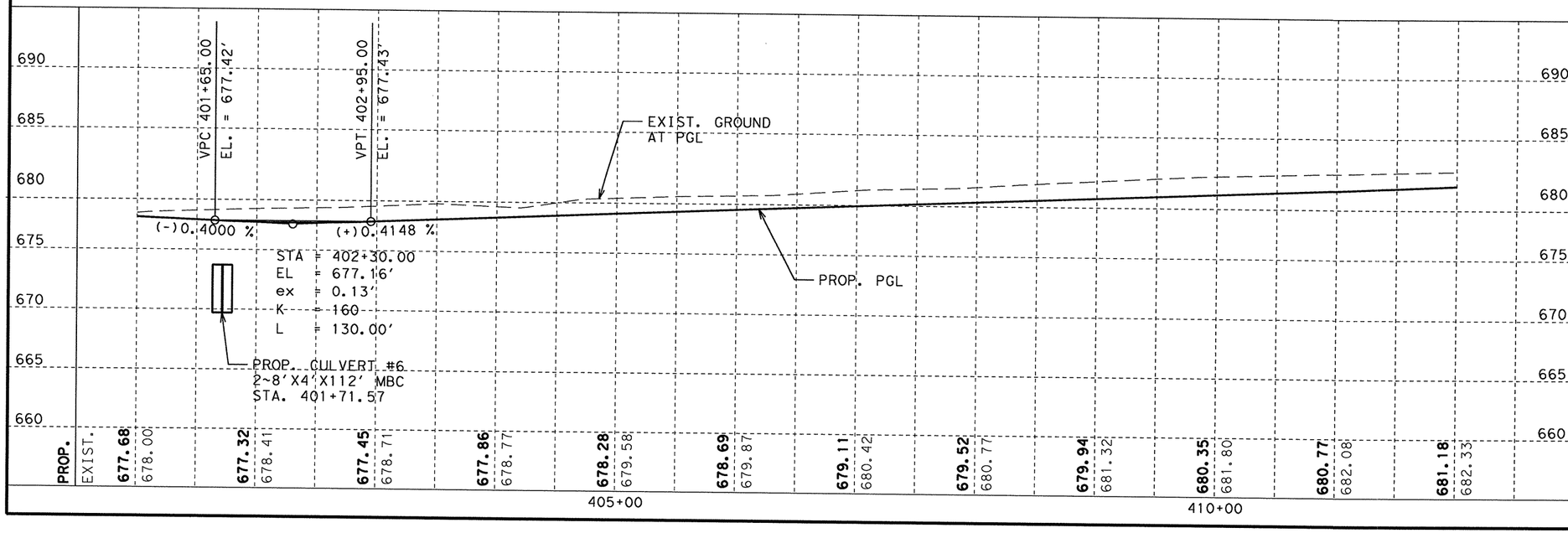

STATE OF TEXAS
NICHOLAS VON SPENCER
93702
LICENSED PROFESSIONAL ENGINEER

Signature of Registrant & Date, P.E. 5-25-11

Texas Department of Transportation
© 2011

SH 289
PLAN & PROFILE
STA. 401+00 TO STA. 412+00

SCALE: V: 1"=10' H: 1"=100' SHEET 10 OF 20

DESIGN	FED. RD. DIV. NO.	STATE PROJECT NO.		HIGHWAY NO.
AMW	6	(SEE TITLE SHEET)		SH 289
GRAPHICS	STATE	DISTRICT	COUNTY	SHEET NO.
AMW	TEXAS	DALLAS	COLLIN	152
CHECK	CONTROL	SECTION	JOB	
NVS	0091	04	055	
CHECK NVS				

T:\DALDGN\#A\SH 289 Collin\THE PLANS\Plan & Profile\PlanProfile 10.dgn

R-201104-01

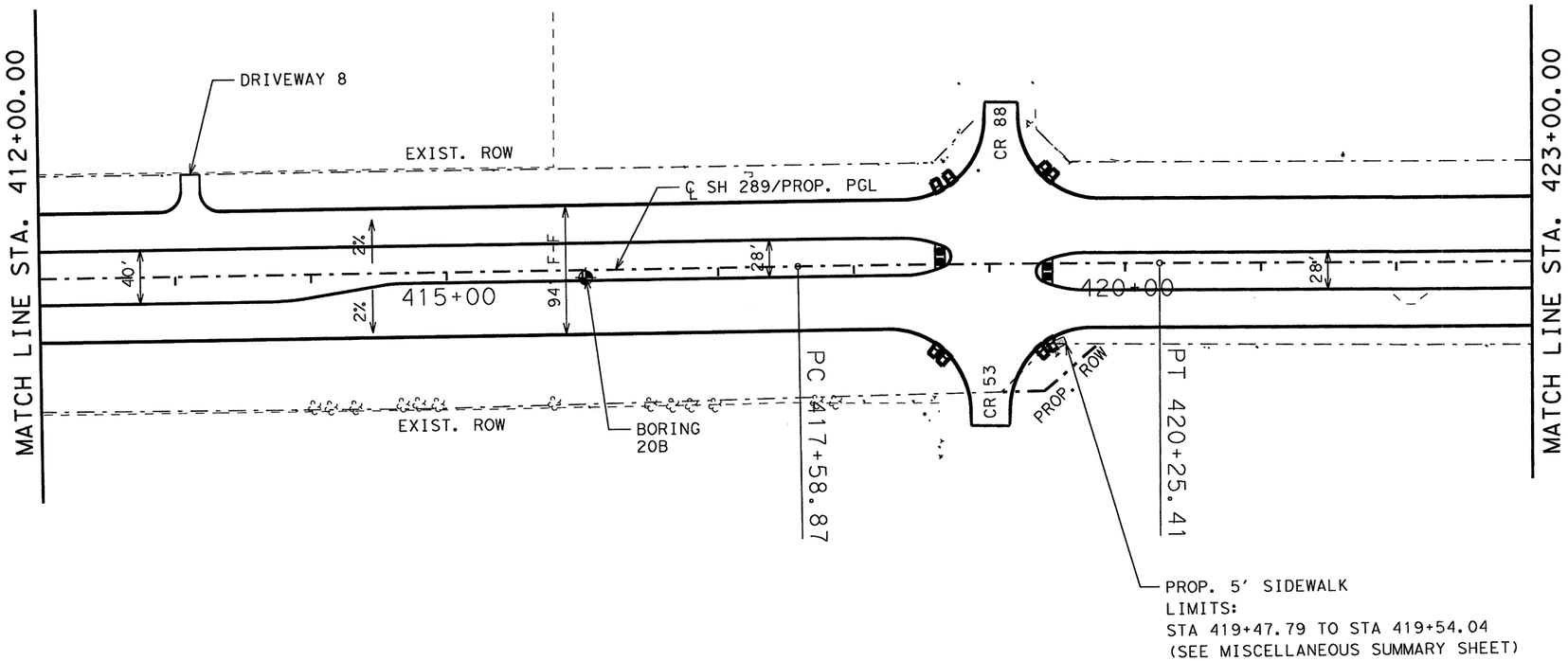

NOTES:
STA 338+00.00 TO STA 440+00.00: EXISTING SOIL HAS HIGH SULFATE CONCENTRATIONS. THIS SECTION IS NOT SUITABLE FOR LIME TREATMENT. (SEE TYPICAL SECTIONS)

DESIGN SPEED : 45 MPH
TRAFFIC EXISTING: 20,100 ADT YEAR 2010
PROJECTED : 31,000 ADT YEAR 2030
FUNCTIONAL CLASS: URBAN PRINCIPAL ARTERIAL

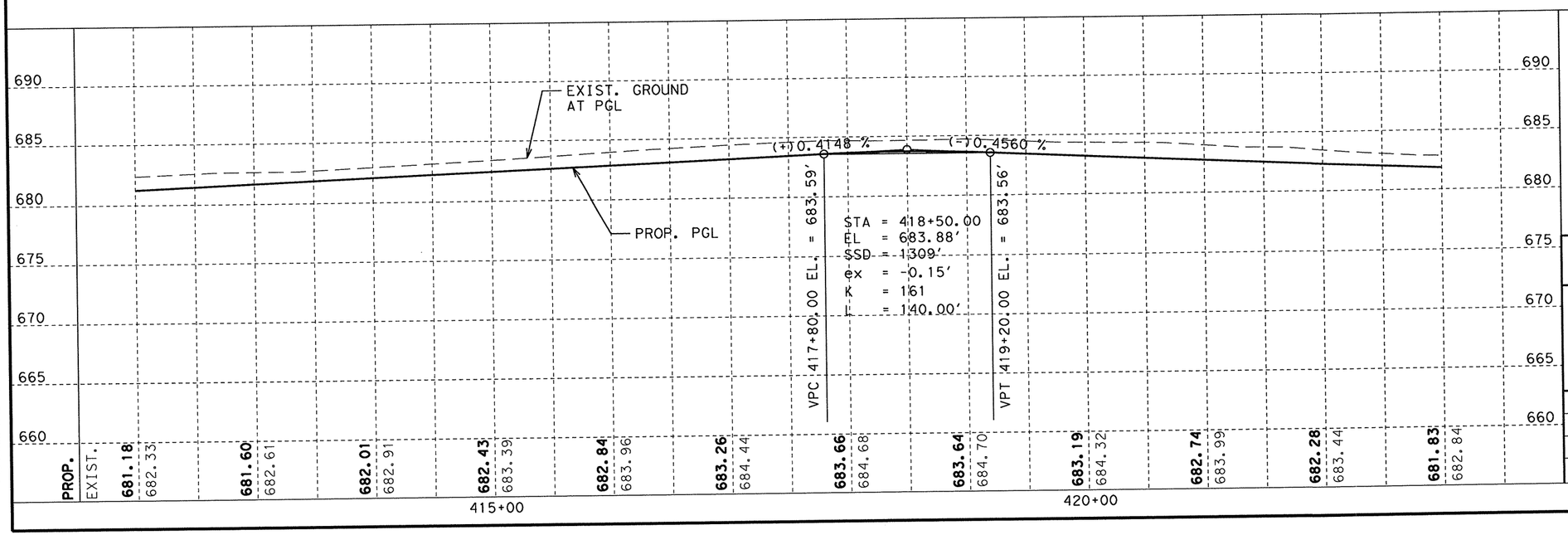

STATE OF TEXAS
NICHOLAS VON SPENCER
93702
LICENSED PROFESSIONAL ENGINEER

Signature of Registrant & Date, P.E. 5-25-11

Texas Department of Transportation
© 2011

SH 289
PLAN & PROFILE
STA. 412+00 TO STA. 423+00

SCALE: V: 1"=10' H: 1"=100' SHEET 11 OF 20

DESIGN	FED. RD. DIV. NO.	STATE PROJECT NO.		HIGHWAY NO.
AMW	6	(SEE TITLE SHEET)		SH 289
GRAPHICS AMW	STATE	DISTRICT	COUNTY	SHEET NO.
CHECK NVS	TEXAS	DALLAS	COLLIN	153
CHECK NVS	CONTROL	SECTION	JOB	
	0091	04	055	

T:\DALDGN\ASH 289 Celina\THE PLANS\Plan & Profile\PlanProfile 11.dgn

5/15/2011

R-201104-01

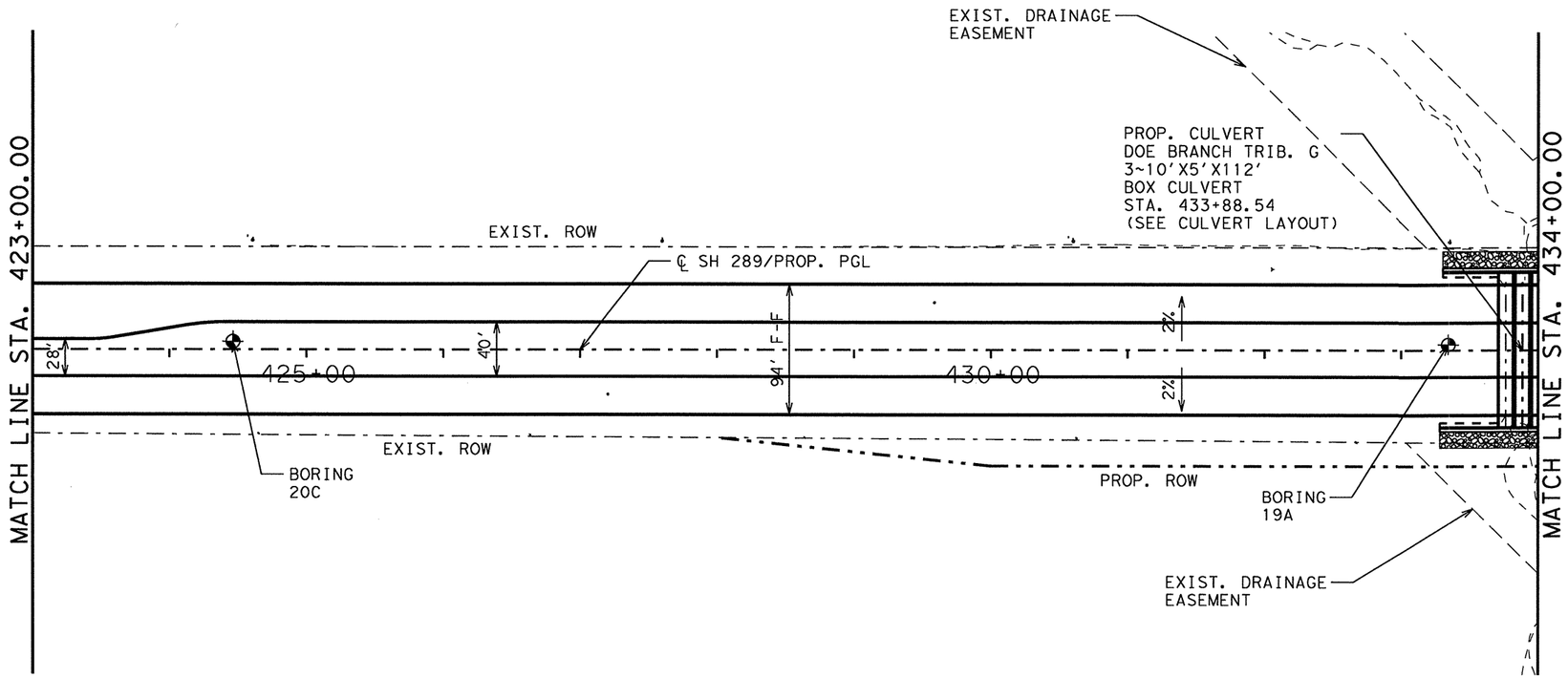

NOTES:
STA 338+00.00 TO STA 440+00.00: EXISTING SOIL HAS HIGH SULFATE CONCENTRATIONS. THIS SECTION IS NOT SUITABLE FOR LIME TREATMENT. (SEE TYPICAL SECTIONS)

DESIGN SPEED : 45 MPH
TRAFFIC EXISTING: 20,100 ADT YEAR 2010
PROJECTED : 31,000 ADT YEAR 2030
FUNCTIONAL CLASS: URBAN PRINCIPAL ARTERIAL

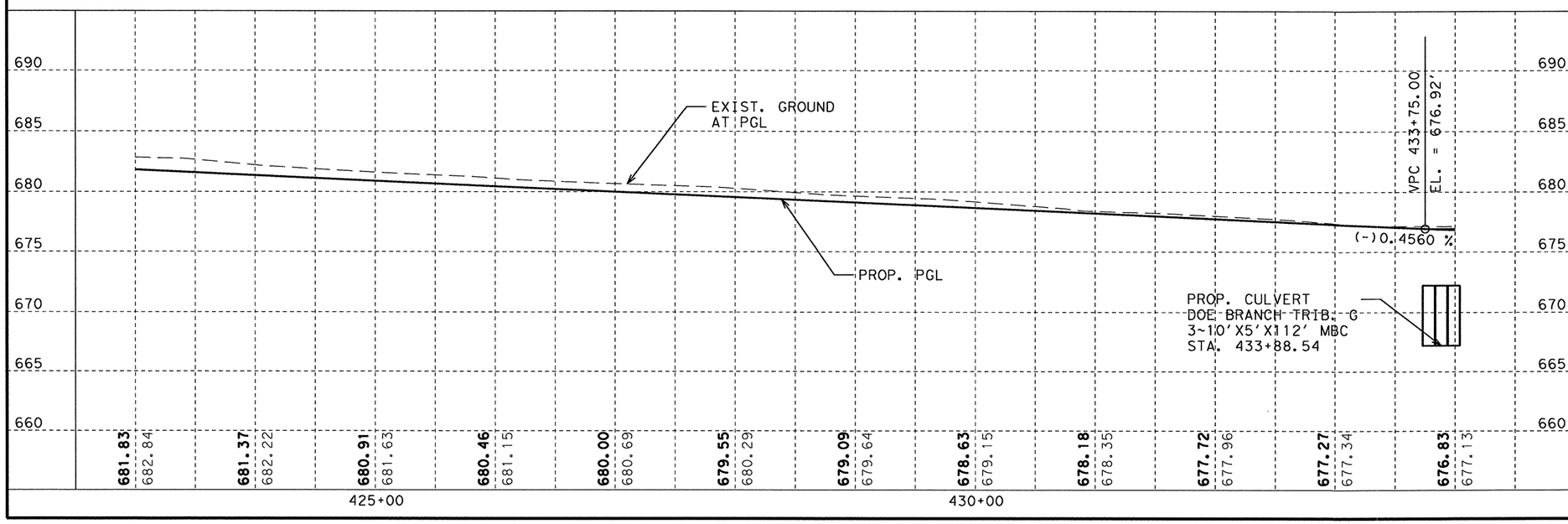

STATE OF TEXAS
NICHOLAS VON SPENCER
93702
LICENSED PROFESSIONAL ENGINEER

Signature of Registrant & Date, P.E. 5-25-11

Texas Department of Transportation
© 2011

SH 289
PLAN & PROFILE
STA. 423+00 TO STA. 434+00

SCALE: V: 1"=10' H: 1"=100' SHEET 12 OF 20

DESIGN	FED. RD. DIV. NO.	STATE PROJECT NO.		HIGHWAY NO.
AMW	6	(SEE TITLE SHEET)		SH 289
GRAPHICS	STATE	DISTRICT	COUNTY	SHEET NO.
AMW	TEXAS	DALLAS	COLLIN	154
CHECK	CONTROL	SECTION	JOB	
NVS	0091	04	055	
CHECK				
NVS				

T:\DALDGN*A\SH 289 Collin\THE PLANS\Plan & Profile\PlanProfile 12.dgn

5/15/2011

R-201104-01

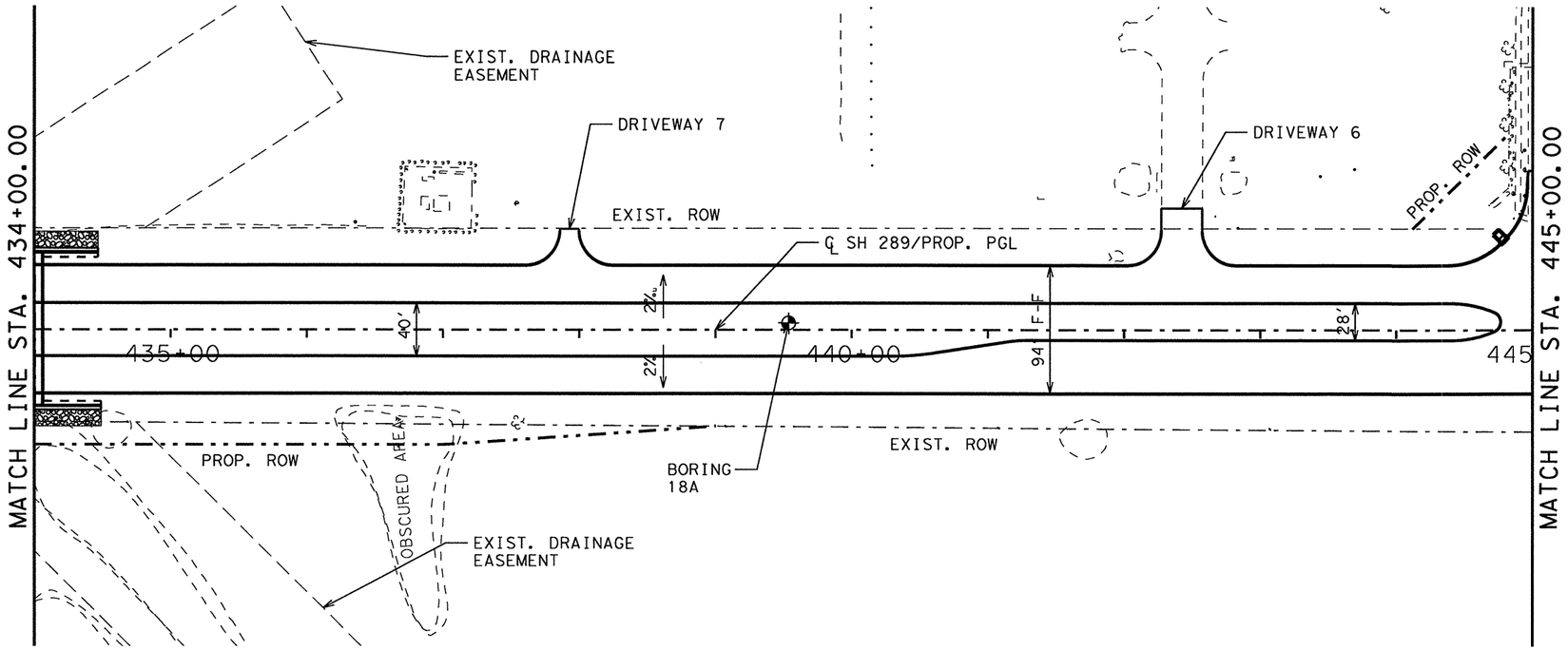

NOTES:
STA 338+00.00 TO STA 440+00.00: EXISTING SOIL HAS HIGH SULFATE CONCENTRATIONS. THIS SECTION IS NOT SUITABLE FOR LIME TREATMENT. (SEE TYPICAL SECTIONS)

DESIGN SPEED : 45 MPH
TRAFFIC EXISTING: 20,100 ADT YEAR 2010
PROJECTED : 31,000 ADT YEAR 2030
FUNCTIONAL CLASS: URBAN PRINCIPAL ARTERIAL

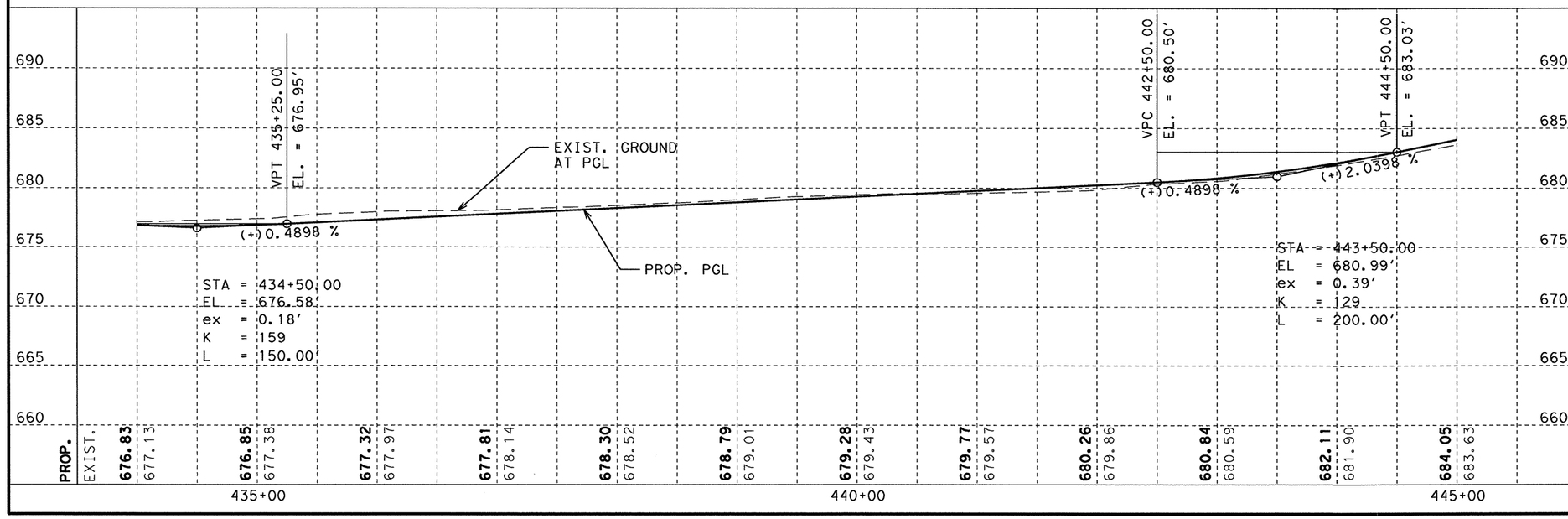

STATE OF TEXAS
NICHOLAS VON SPENCER
93702
LICENSED PROFESSIONAL ENGINEER

Signature of Registrant & Date, P.E. 5-25-11

Texas Department of Transportation © 2011

SH 289
PLAN & PROFILE
STA. 434+00 TO STA. 445+00

SCALE: V: 1"=10' H: 1"=100' SHEET 13 OF 20

DESIGN	FED. RD. DIV. NO.	STATE PROJECT NO.		HIGHWAY NO.
AMW	6	(SEE TITLE SHEET)		SH 289
GRAPHICS AMW	STATE	DISTRICT	COUNTY	SHEET NO.
CHECK NVS	TEXAS	DALLAS	COLLIN	155
CHECK NVS	CONTROL	SECTION	JOB	
	0091	04	055	

T:\DALDGN*A\SH 289 Celina\THE PLANS\Plan & Profile\PlanProfile 13.dgn

R-201104-01

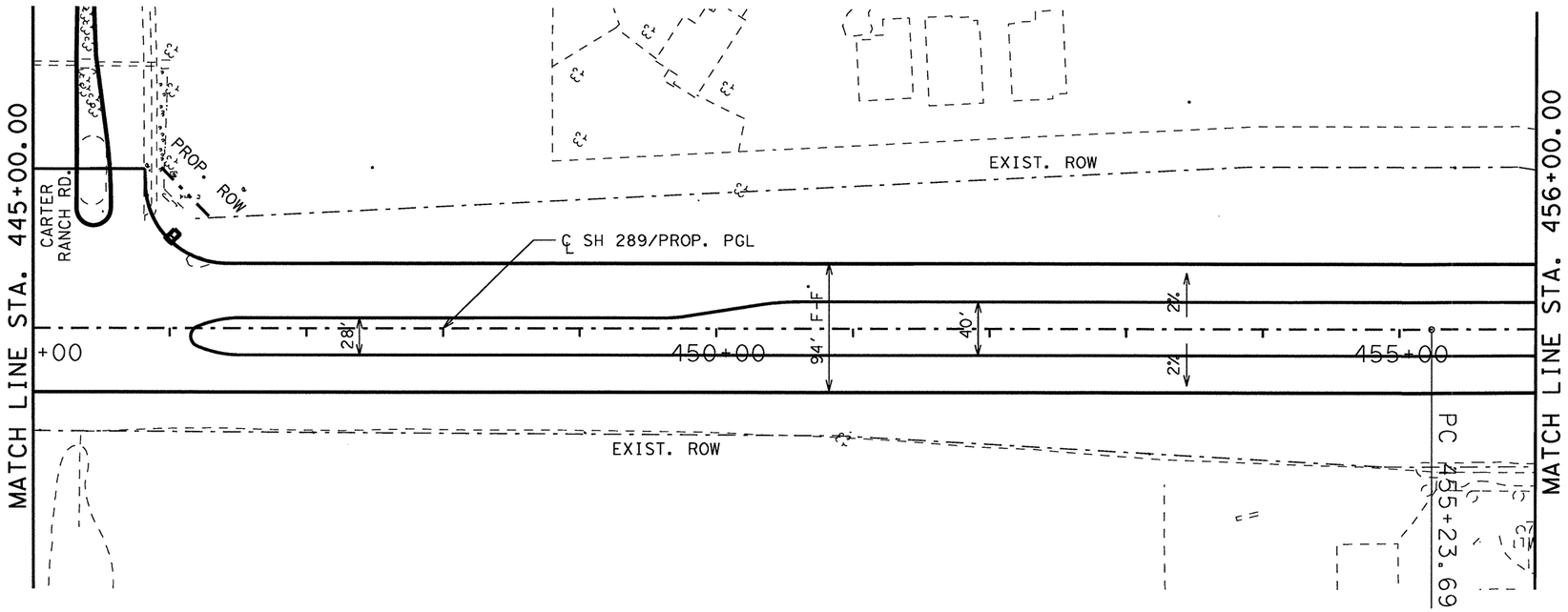

DESIGN SPEED : 45 MPH
TRAFFIC EXISTING: 20,100 ADT YEAR 2010
PROJECTED : 31,000 ADT YEAR 2030
FUNCTIONAL CLASS: URBAN PRINCIPAL ARTERIAL

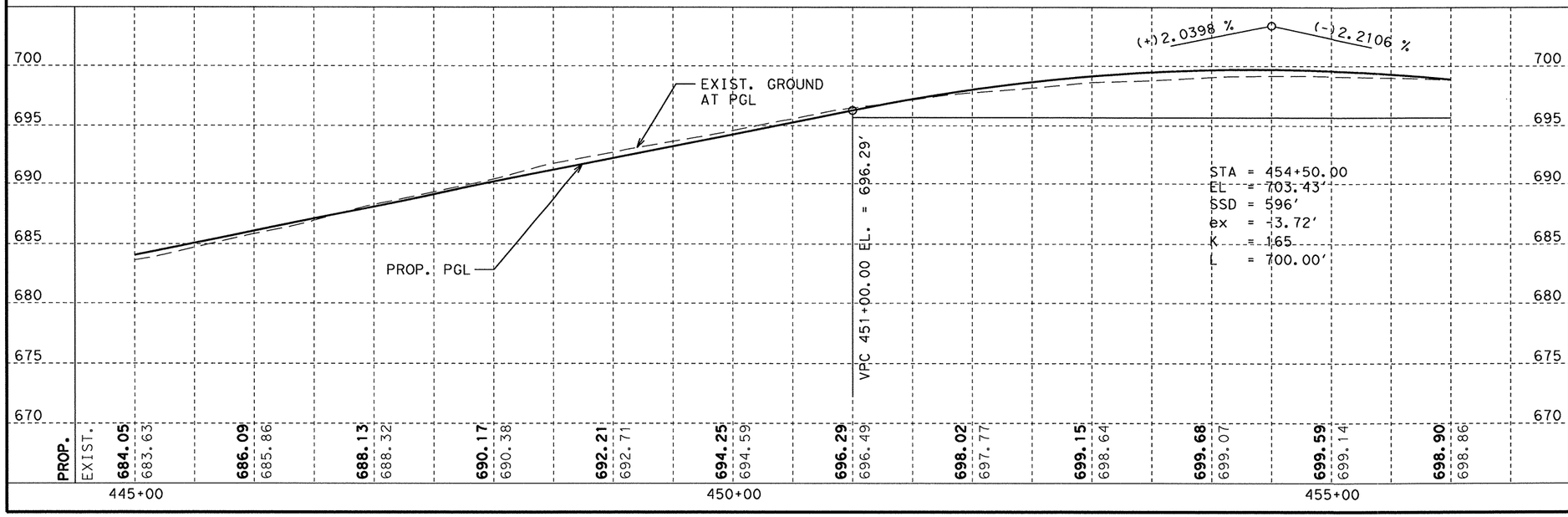

STATE OF TEXAS
NICHOLAS VON SPENCER
93702
LICENSED
PROFESSIONAL ENGINEER

Signature of Registrant & Date, P.E. 5-25-11

Texas Department of Transportation
© 2011

SH 289
PLAN & PROFILE
STA. 445+00 TO STA. 456+00

SCALE: V: 1"=10' H: 1"=100' SHEET 14 OF 20

DESIGN	FED. RD. DIV. NO.	STATE PROJECT NO.		HIGHWAY NO.
AMW	6	(SEE TITLE SHEET)		SH 289
GRAPHICS AMW	STATE	DISTRICT	COUNTY	SHEET NO.
CHECK NVS	TEXAS	DALLAS	COLLIN	156
CHECK NVS	CONTROL	SECTION	JOB	
	0091	04	055	

T:\DALDGN*A\SH 289 Celina\THE PLANS\Plan & Profile\PlanProfile 14.dgn

5/15/2011

R-201104-01

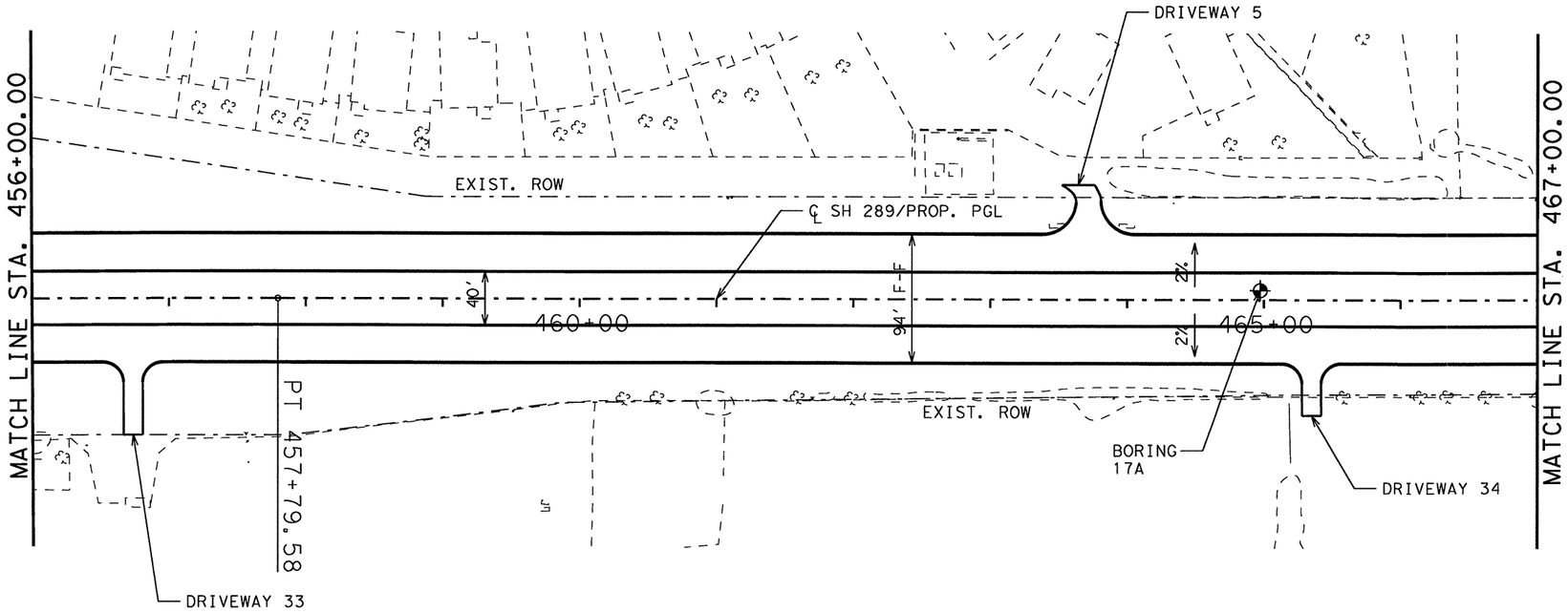

DESIGN SPEED : 45 MPH
TRAFFIC EXISTING: 20,100 ADT YEAR 2010
PROJECTED : 31,000 ADT YEAR 2030
FUNCTIONAL CLASS: URBAN PRINCIPAL ARTERIAL

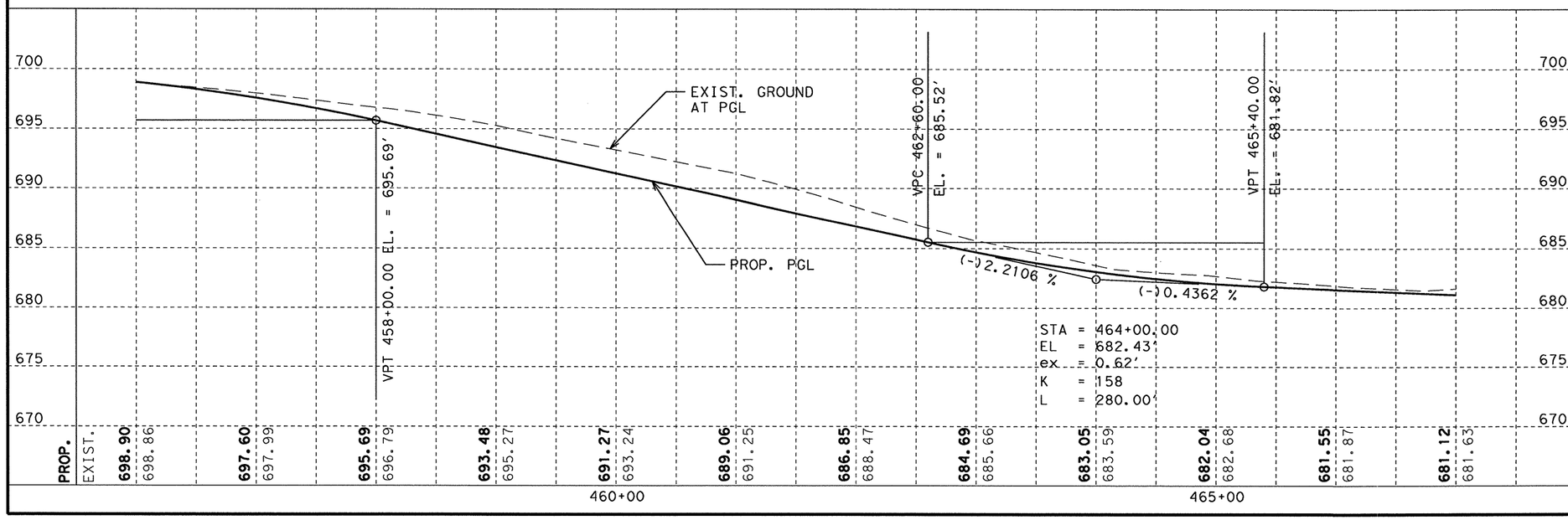

STATE OF TEXAS
NICHOLAS VON SPENCER
93702
LICENSED
PROFESSIONAL ENGINEER

Signature of Registrant & Date, P.E. 5-25-11

Texas Department of Transportation
© 2011

SH 289
PLAN & PROFILE
STA. 456+00 TO STA. 467+00

SCALE: V: 1"=10' H: 1"=100' SHEET 15 OF 20

DESIGN AMW	FED. RD. DIV. NO.	STATE PROJECT NO.		HIGHWAY NO.
GRAPHICS AMW	6	(SEE TITLE SHEET)		SH 289
CHECK NVS	STATE	DISTRICT	COUNTY	SHEET NO.
	TEXAS	DALLAS	COLLIN	157
CHECK NVS	CONTROL	SECTION	JOB	
	0091	04	055	

T:\DALDGN*A\SH 289 Collin\THE PLANS\Plan & Profile\PlanProfile 15.dgn

R-201104-01

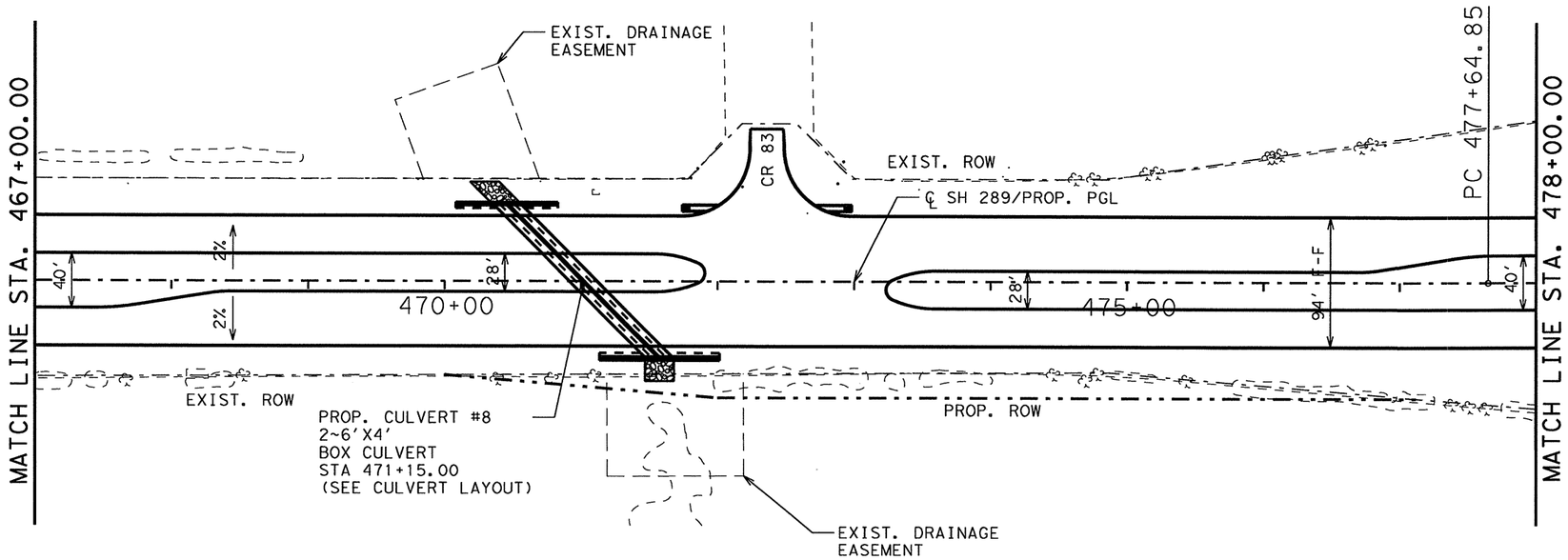

DESIGN SPEED : 45 MPH
TRAFFIC EXISTING: 20,100 ADT YEAR 2010
PROJECTED : 31,000 ADT YEAR 2030
FUNCTIONAL CLASS: URBAN PRINCIPAL ARTERIAL

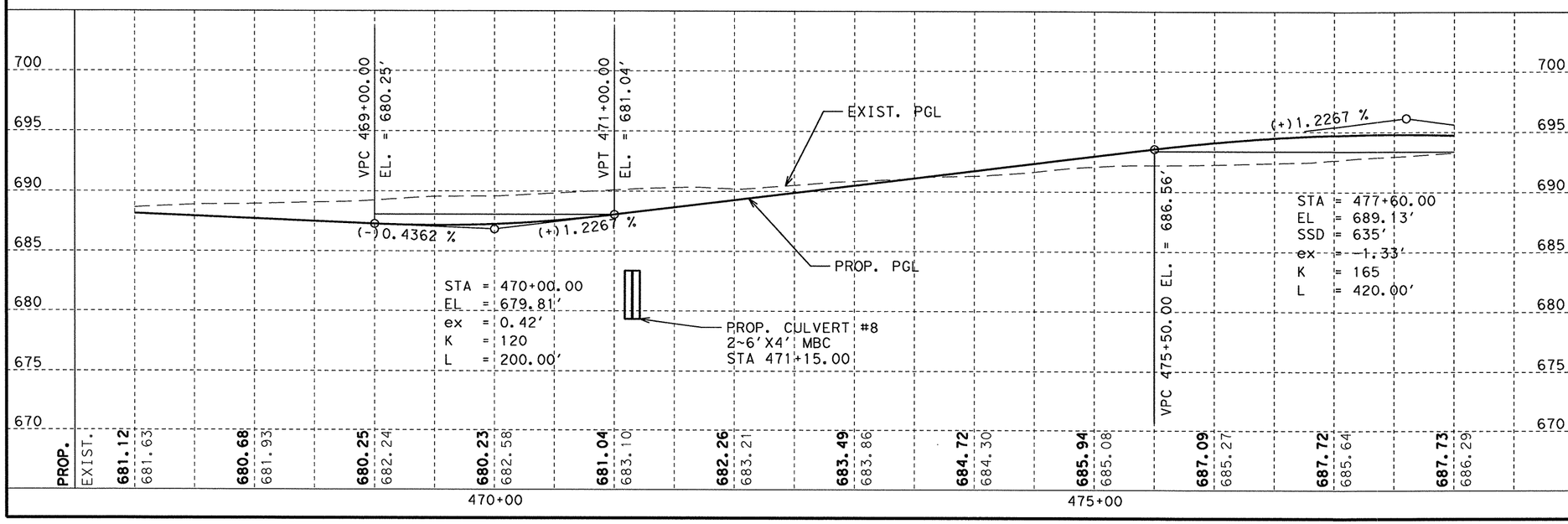

STATE OF TEXAS
NICHOLAS VON SPENCER
93702
LICENSED PROFESSIONAL ENGINEER

Signature of Registrant & Date, P.E. 5-25-11

Texas Department of Transportation
© 2011

SH 289
PLAN & PROFILE
STA. 467+00 TO STA. 478+00

SCALE: V: 1"=10' H: 1"=100' SHEET 16 OF 20

DESIGN	FED. RD. DIV. NO.	STATE PROJECT NO.		HIGHWAY NO.
AMW	6	(SEE TITLE SHEET)		SH 289
GRAPHICS AMW	STATE	DISTRICT	COUNTY	SHEET NO.
CHECK NVS	TEXAS	DALLAS	COLLIN	158
CHECK NVS	CONTROL 0091	SECTION 04	JOB 055	

T:\DALDGN\A\SH 289 Celina\THE PLANS\Plan & Profile\PlanProfile 16.dgn

5/15/2011

R-201104-01

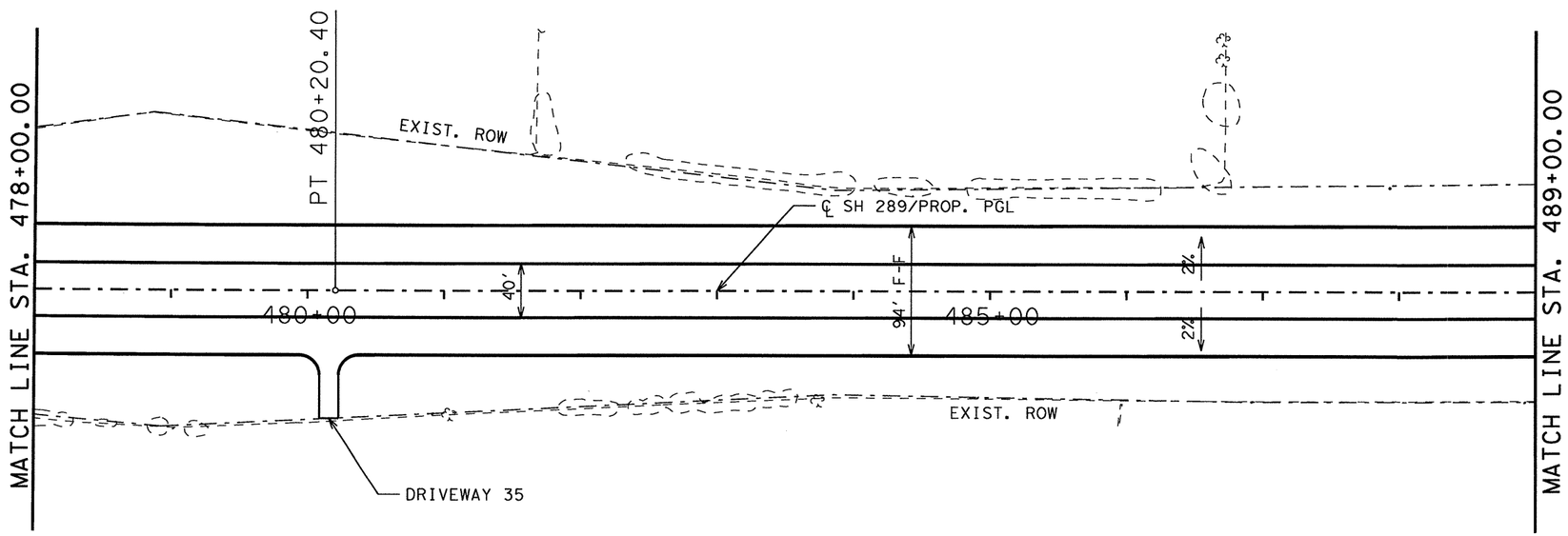

DESIGN SPEED : 45 MPH
TRAFFIC EXISTING: 20,100 ADT YEAR 2010
PROJECTED : 31,000 ADT YEAR 2030
FUNCTIONAL CLASS: URBAN PRINCIPAL ARTERIAL

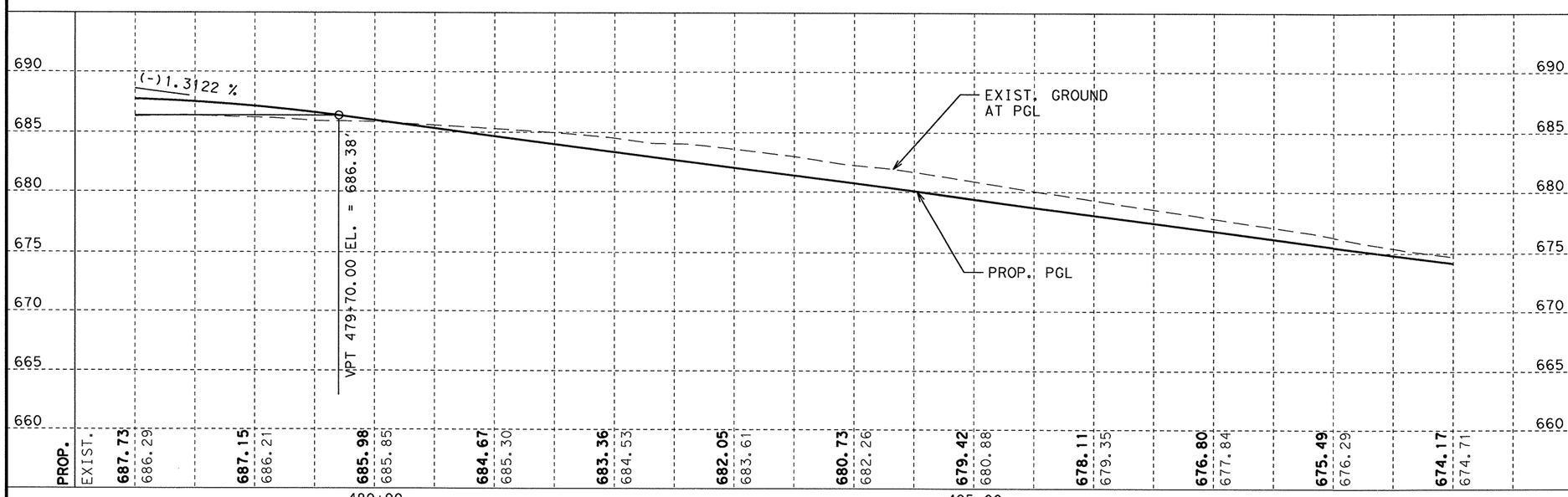

STATE OF TEXAS
NICHOLAS VON SPENCER
93702
LICENSED PROFESSIONAL ENGINEER

Signature of Registrant , P.E. 5-25-11 & Date

Texas Department of Transportation
© 2011

SH 289
PLAN & PROFILE
STA. 478+00 TO STA. 489+00

SCALE: V: 1"=10' H: 1"=100' SHEET 17 OF 20

DESIGN	FED. RD. DIV. NO.	STATE PROJECT NO.		HIGHWAY NO.
AMW	6	(SEE TITLE SHEET)		SH 289
GRAPHICS AMW	STATE	DISTRICT	COUNTY	SHEET NO.
CHECK NVS	TEXAS	DALLAS	COLLIN	159
CHECK NVS	CONTROL 0091	SECTION 04	JOB 055	

T:\DALDGN#A\SH 289 Collin\THE PLANS\Plan & Profile\PlanProfile 17.dgn

R-201104-01

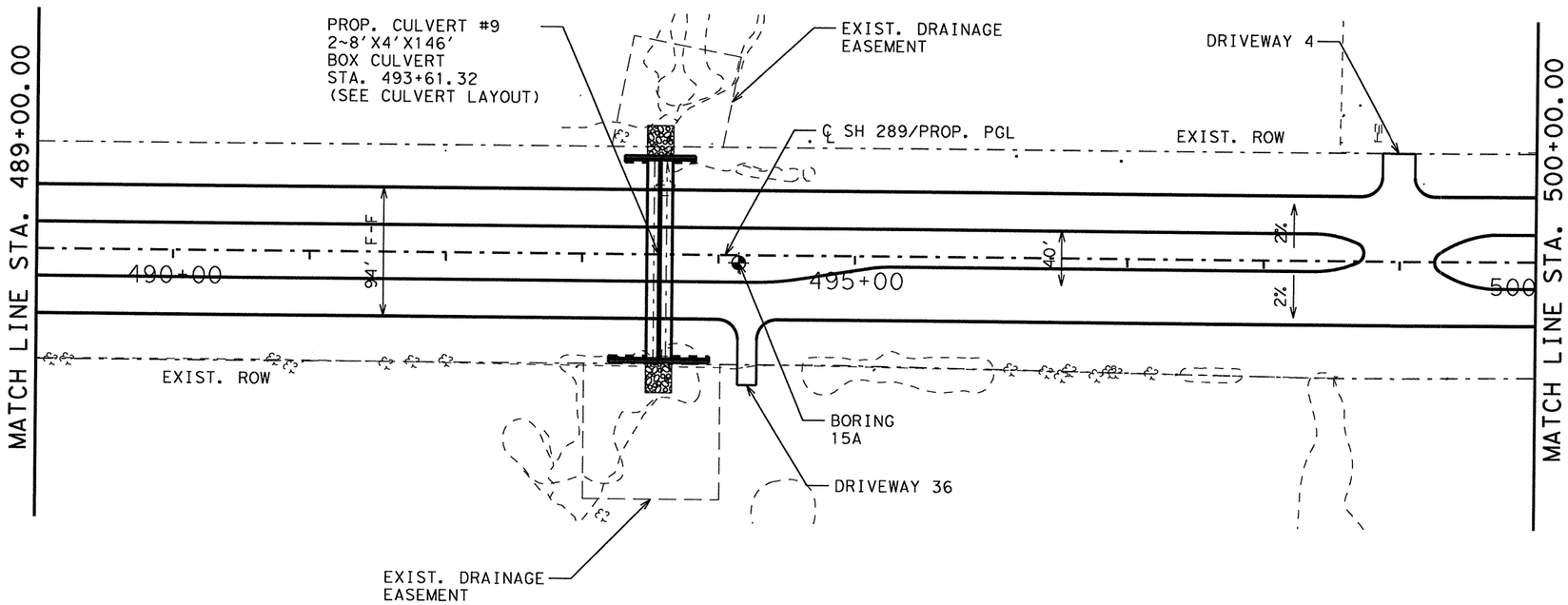

DESIGN SPEED : 45 MPH
TRAFFIC EXISTING: 20,100 ADT YEAR 2010
PROJECTED : 31,000 ADT YEAR 2030
FUNCTIONAL CLASS: URBAN PRINCIPAL ARTERIAL

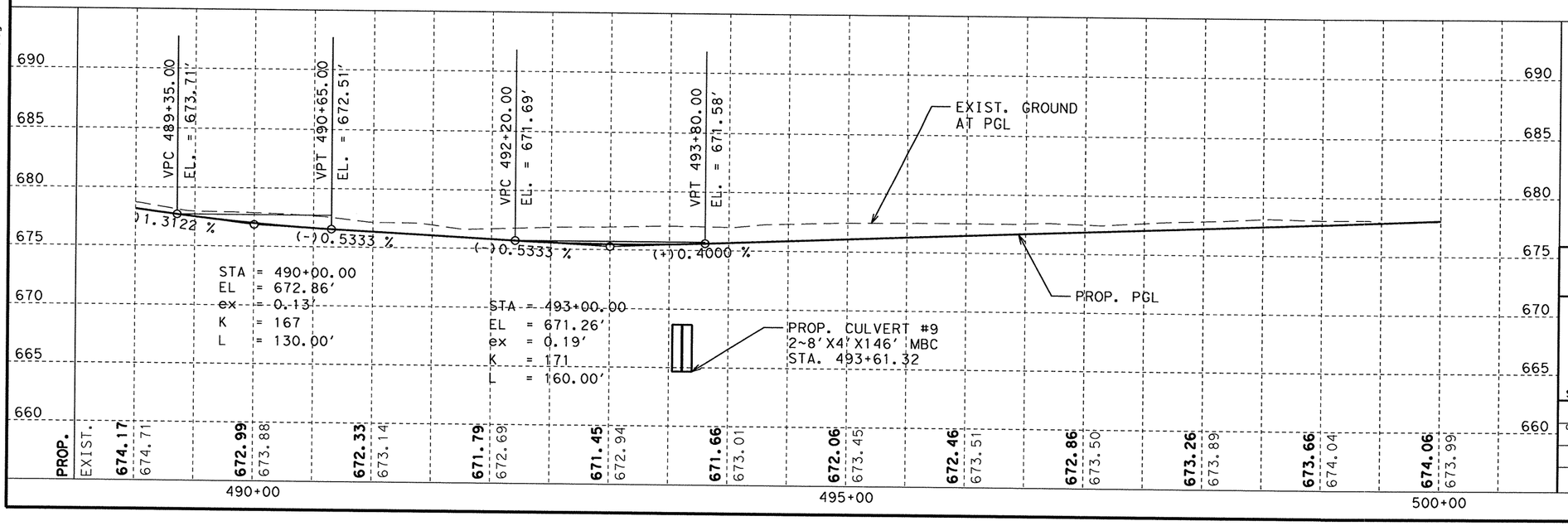

STATE OF TEXAS
NICHOLAS VON SPENCER
93702
LICENSED PROFESSIONAL ENGINEER

Nicholas Von Spencer, P.E. 5-25-11
Signature of Registrant & Date

Texas Department of Transportation
© 2011

SH 289
PLAN & PROFILE
STA. 489+00 TO STA. 500+00

SCALE: V: 1"=10' H: 1"=100' SHEET 18 OF 20

DESIGN	FED. RD. DIV. NO.	STATE PROJECT NO.		HIGHWAY NO.
AMW	6	(SEE TITLE SHEET)		SH 289
GRAPHICS	STATE	DISTRICT	COUNTY	SHEET NO.
AMW	TEXAS	DALLAS	COLLIN	160
CHECK	CONTROL	SECTION	JOB	
NVS	0091	04	055	
CHECK NVS				

T:\DALDGN\ASH 289 Celina\THE PLANS\Plan & Profile\PlanProfile 18.dgn

5/15/2011

R-201104-01

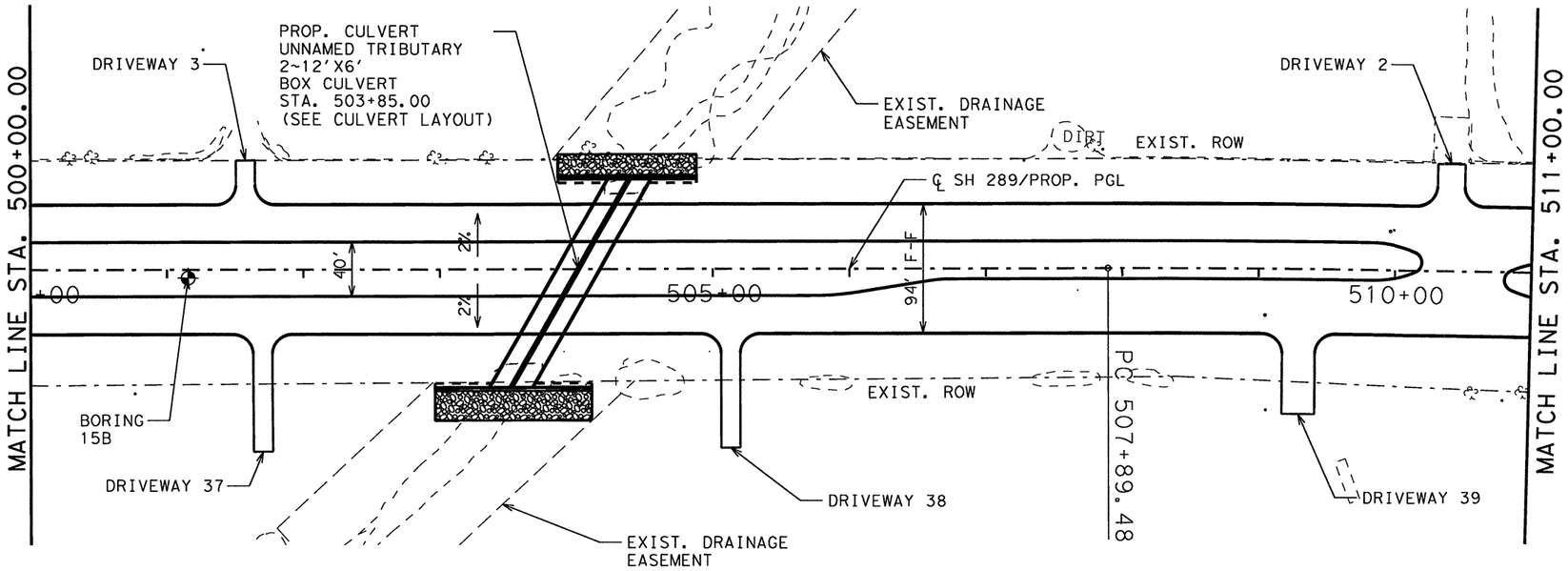

DESIGN SPEED : 45 MPH
TRAFFIC EXISTING: 20,100 ADT YEAR 2010
PROJECTED : 31,000 ADT YEAR 2030
FUNCTIONAL CLASS: URBAN PRINCIPAL ARTERIAL

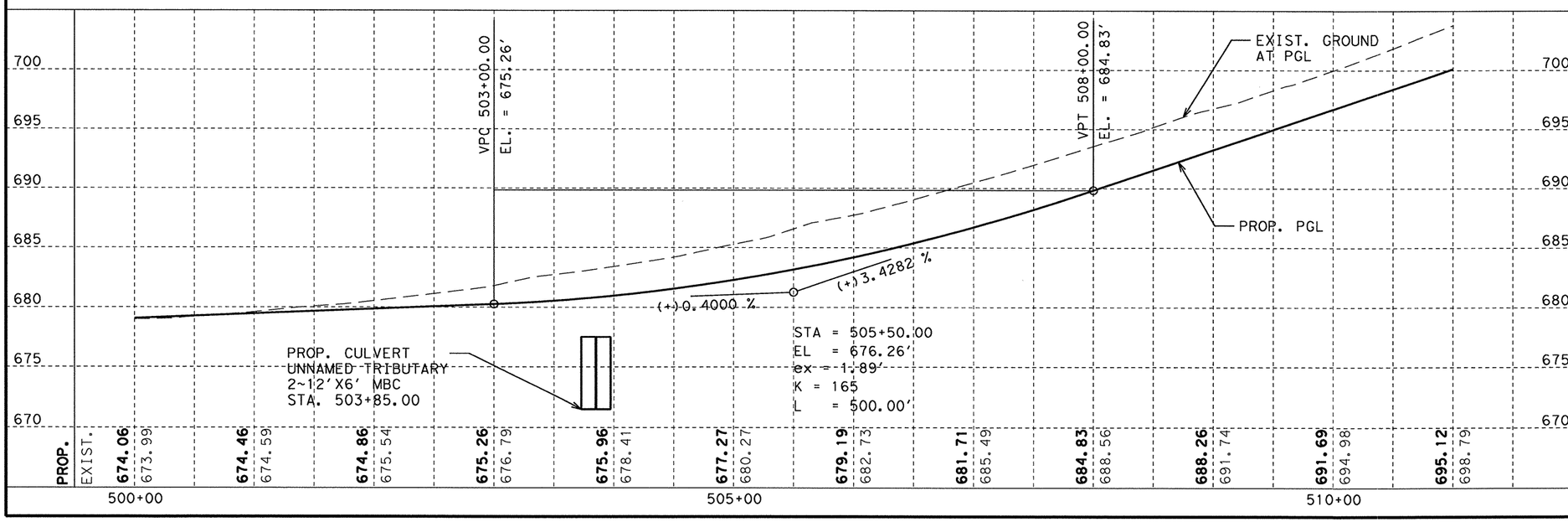

STATE OF TEXAS
NICHOLAS VON SPENCER
93702
LICENSED
PROFESSIONAL ENGINEER

Signature of Registrant , P.E. & Date 5-25-11

Texas Department of Transportation
© 2011

SH 289
PLAN & PROFILE
STA. 500+00 TO STA. 511+00

SCALE: V: 1"=10' H: 1"=100' SHEET 19 OF 20

DESIGN	FED. RD. DIV. NO.	STATE PROJECT NO.		HIGHWAY NO.
AMW	6	(SEE TITLE SHEET)		SH 289
GRAPHICS	STATE	DISTRICT	COUNTY	SHEET NO.
AMW	TEXAS	DALLAS	COLLIN	161
CHECK	CONTROL	SECTION	JOB	
NVS	0091	04	055	
CHECK NVS				

T:\DALDGN*A\SH 289 Celina\THE PLANS\Plan & Profile\PlanProfile 19.dgn

5/15/2011

R-201104-01

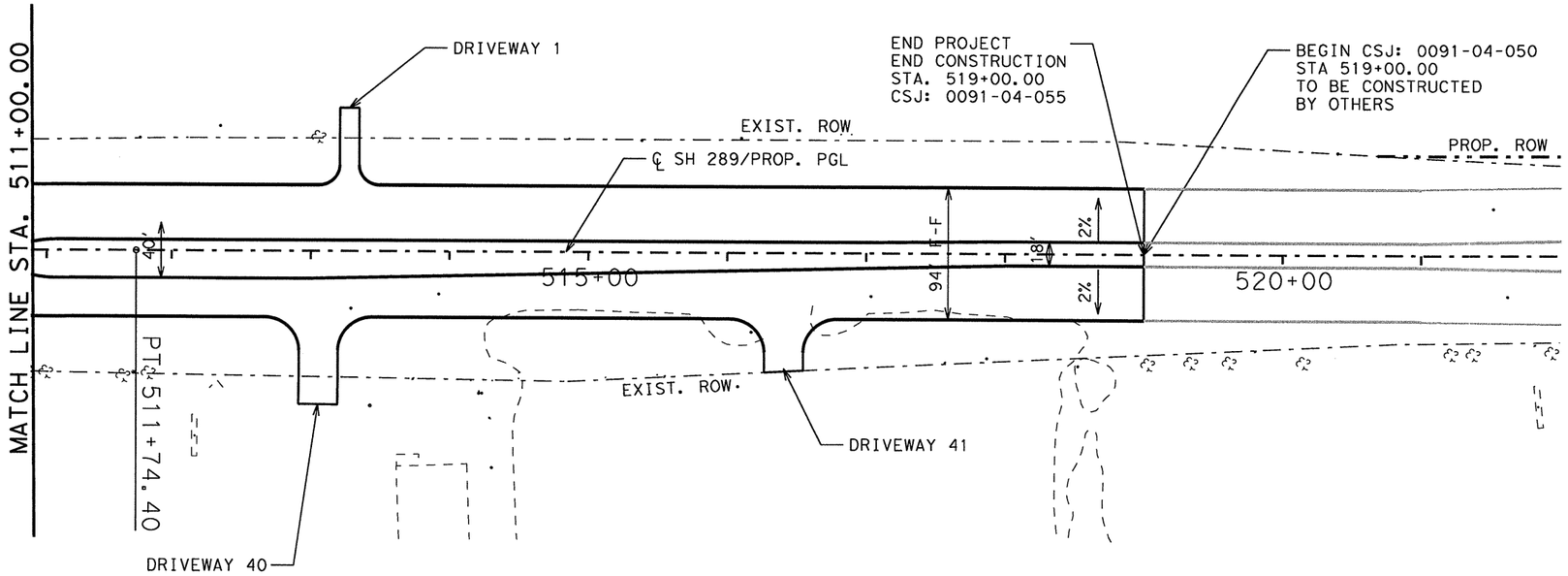

NOTES:

1. SOME OPERATIONS MAY REQUIRE COORDINATION WITH ADJACENT CONTRACTORS CONSTRUCTING THE 0091-04-050 AND 0091-03-021 CSJ PROJECTS.

2. BOTH 0091-04-055 ANS 0091-04-050 PROJECTS WILL BE BUILT AND USE IDENTICAL TCP PHASING TO ALLOW FOR ROW ACQUISITION ON THE WEST SIDE (DOWNSTREAM) FIRST AND EAST SIDE (UPSTREAM) THEREAFTER.

DESIGN SPEED : 45 MPH
TRAFFIC EXISTING: 20,100 ADT YEAR 2010
PROJECTED : 31,000 ADT YEAR 2030
FUNCTIONAL CLASS: URBAN PRINCIPAL ARTERIAL

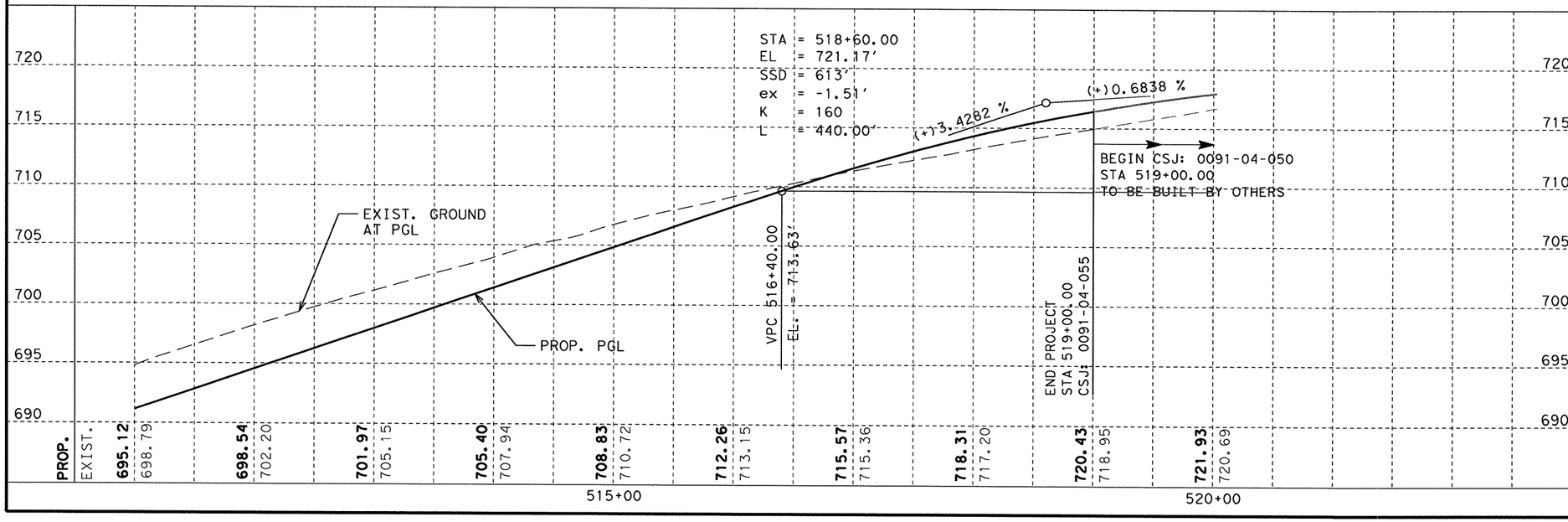

STATE OF TEXAS
NICHOLAS VON SPENCER
93702
LICENSED PROFESSIONAL ENGINEER

Signature of Registrant & Date, P.E. 5-25-11

Texas Department of Transportation
© 2011

SH 289
PLAN & PROFILE
STA. 511+00 TO END STA. 519+00

SCALE: V: 1"=10' H: 1"=100' SHEET 20 OF 20

DESIGN	FED. RD. DIV. NO.	STATE PROJECT NO.		HIGHWAY NO.
AMW	6	(SEE TITLE SHEET)		SH 289
GRAPHICS	STATE	DISTRICT	COUNTY	SHEET NO.
AMW	TEXAS	DALLAS	COLLIN	162
CHECK	CONTROL	SECTION	JOB	
NVS	0091	04	055	
CHECK NVS				

$FILE$ $DATE$

R-201104-01

SHEET NO.	LOCATION	CENTERLINE STATION	PROPOSED PGL ELEVATION (FT)	CHAIN NAME	CHAIN FROM STA	CHAIN TO STA	INTERSECTION RADIUS (FT)	INTERSECTION WIDTH (FT)		OFFSET FROM C.L. SH 289 (END OF PAVEMENT) (FT)	MATCH EXISTING PAVEMENT AT EL (FT)	PROPOSED PAVEMENT ENDS STA	PROPOSED PAVEMENT ENDS AT ELE (FT)	PROPOSED PAVEMENT ENDS STA	PROPOSED PAVEMENT ENDS AT ELE (FT)	DESIGN SPEED (MPH)
1 OF 10	SH 289 AT CR 83	472+37.67	682.73	HI1CR83	0+00.00	3+00.02	50	24.0	EB	111.00	684.21	472+23.84	683.49	472+47.85	110.09	30
2 OF 10	SH 289 AT CARTER RANCH RD	445+37.99	684.82	HI2CRRD	0+00.00	3+00.00	60	85.0	EB	117.00	687.07	444+96.74	686.06	445+81.74	686.88	30
3 OF 10	SH 289 AT CR 88	419+08.11	683.61	HI3CR88	0+00.00	3+00.02	60	24.0	EB	119.00	682.60	418+97.54	681.97	419+21.440	682.37	30
	SH 289 AT CR 53	419+00.62	683.63	HI4CR53	0+00.00	3+00.01	60	28.0	WB	119.00	680.15	418+85.74	679.76	419+13.91	679.73	30
4 OF 10	SH 289 AT CR 89 (HARPER SMITH RD)	378+12.19	683.79	HI5CR89	0+00.00	3+03.25	60	19.0	EB	127.00	681.42	377+83.87	681.48	378+03.13	681.36	30
	SH 289 AT CR 55	378+10.03	683.80	HI6CR55	0+00.00	3+53.24	60	21.5	WB	141.00	678.12	378+18.88	677.95	378+39.86	677.96	30
5 OF 10	SH 289 AT BUS SH 289	373+00.17	685.17	HI7B289	0+00.00	2+79.73	50	50.0	WB	116.00	685.69	372+65.29	684.72	373+14.21	685.02	30
6 OF 10	SH 289 AT CR 91	344+22.03	696.91	HI8CR91	0+00.00	3+18.92	50	24.0	EB	136.00	695.70	343+61.55	694.85	343+84.35	695.20	30
7 OF 10	SH 289 AT E ASH ST	325+06.19	725.84	HI9ASH	0+00.00	3+11.54	60	17.5	WB	143.00	722.21	325+37.76	721.36	325+54.71	721.60	30
8 OF 10	SH 289 AT E ELM ST	317+08.22	721.69	HI10ELM	0+00.00	3+15.72	50	18.5	WB	146.00	724.82	317+47.31	720.19	317+64.90	720.26	30
9 OF 10	SH 289 AT CR 98 (FUTURE)	316+15.42	719.30	HI11C98	0+00.00	4+25.69	50	63.0	EB	153.00	724.26	315+70.46	724.30	315+93.20	724.54	30
10 OF 10	SH 289 AT E PECAN ST	305+19.64	712.55	HI12F455	0+00.00	7+38.61	80(NW) & 60(SW)	46.0	WB	176.00	712.25	304+18.51	717.88	304+41.33	717.43	30
	SH 289 AT FM 455						70	26.0	EB	188.00	718.07	305+81.68	711.10	306+22.21	710.70	30

NOTES: 1. SEE INTERSECTION PROFILE FOR TIE IN LIMITS
2. ABBREVIATIONS
A. EB=EAST BOUND
B. WB=WESTBOUND INTERSECTION
C. NW=NORWEST CORNER OF INTERSECTION
D. SW=SOUTHWEST CORNER OF INTERSECTION

STATE OF TEXAS
NICHOLAS VON SPENCER
93702
LICENSED
PROFESSIONAL ENGINEER

Nicholas V Spencer, P.E. 4-7-11
Signature of Registrant & Date

Texas Department of Transportation
©2011

SH 289 INTERSECTION DATA

SCALE: NOT TO SCALE — SHEET 1 OF 1

DESIGN	FED. RD. DIV. NO.	STATE PROJECT NO.		HIGHWAY NO.
HJL	6	SEE TITLE SHEET		SH 289
GRAPHICS HJL	STATE	DISTRICT	COUNTY	SHEET NO.
CHECK NVS	TEXAS	DALLAS	COLLIN	163
CHECK	CONTROL	SECTION	JOB	
	0091	04	055	

R-201104-01

CR 83 PLAN VIEW

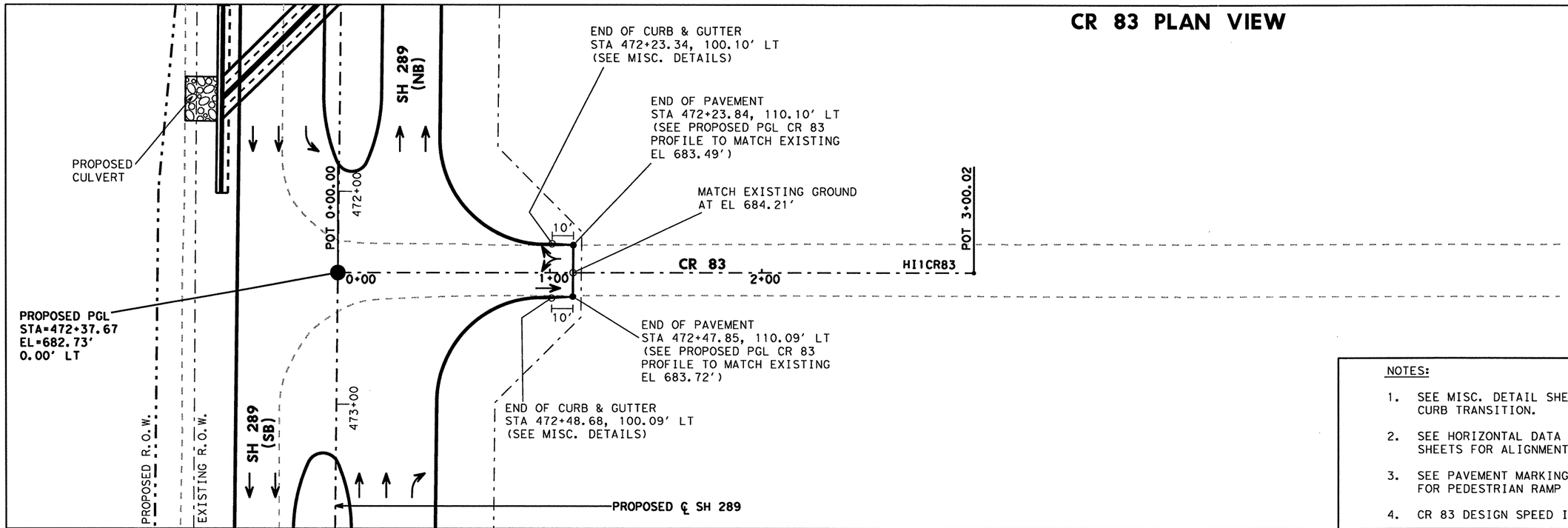

NOTES:

1. SEE MISC. DETAIL SHEET FOR CURB TRANSITION.
2. SEE HORIZONTAL DATA SHEETS FOR ALIGNMENT DATA.
3. SEE PAVEMENT MARKING SHEETS FOR PEDESTRIAN RAMP TYPES.
4. CR 83 DESIGN SPEED IS 30 MPH.

CR 83 PROFILE

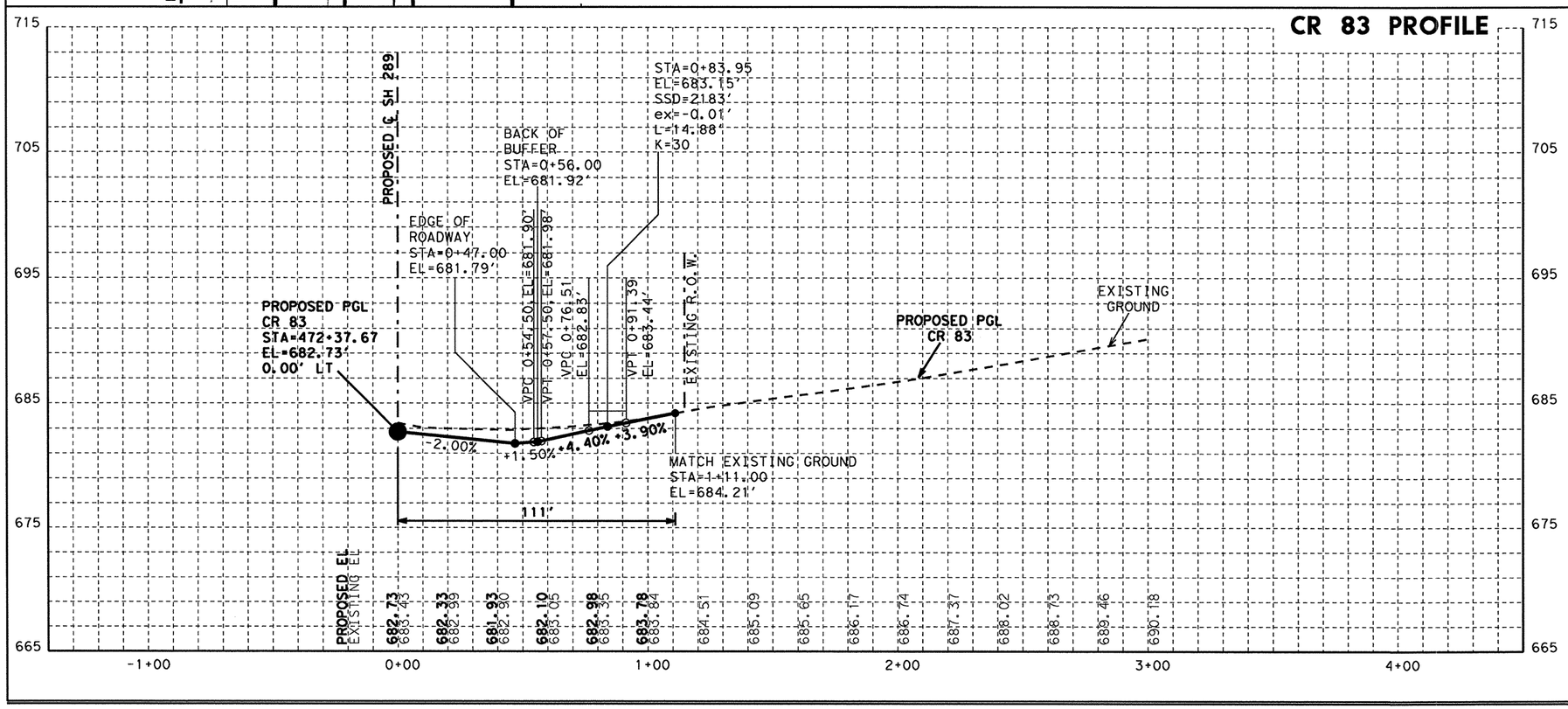

STATE OF TEXAS
NICHOLAS VON SPENCER
93702
LICENSED
PROFESSIONAL ENGINEER

Nicholas V Spencer, P.E. 4-7-11
Signature of Registrant & Date

Texas Department of Transportation
©2011

SH 289 AT CR 83
STA 472+37.67
PLAN AND PROFILE

SCALE: HOR 1"=50' & VER 1"=10' SHEET 1 OF 10

DESIGN	FED. RD. DIV. NO.	STATE PROJECT NO.		HIGHWAY NO.
HJL	6	SEE TITLE SHEET		SH 289
GRAPHICS HJL	STATE	DISTRICT	COUNTY	SHEET NO.
CHECK NVS	TEXAS	DALLAS	COLLIN	164
CHECK	CONTROL	SECTION	JOB	
	0091	04	055	

R-201104-01

CARTER RANCH RD PLAN VIEW

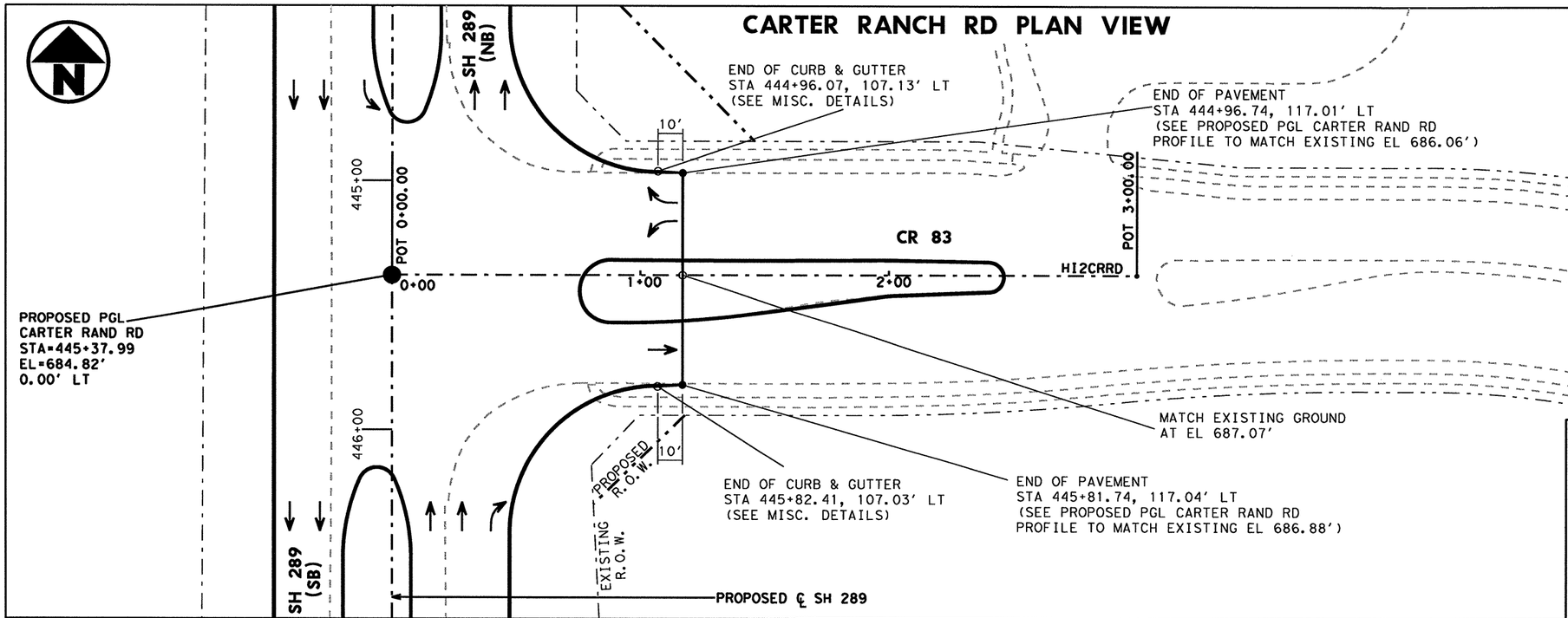

NOTES:

1. SEE MISC. DETAIL SHEET FOR CURB TRANSITION.
2. SEE HORIZONTAL DATA SHEETS FOR ALIGNMENT DATA.
3. SEE PAVEMENT MARKING SHEETS FOR PEDESTRIAN RAMP TYPES.
4. CARTER RANCH RD DESIGN SPEED IS 30 MPH.

CARTER RANCH RD PROFILE

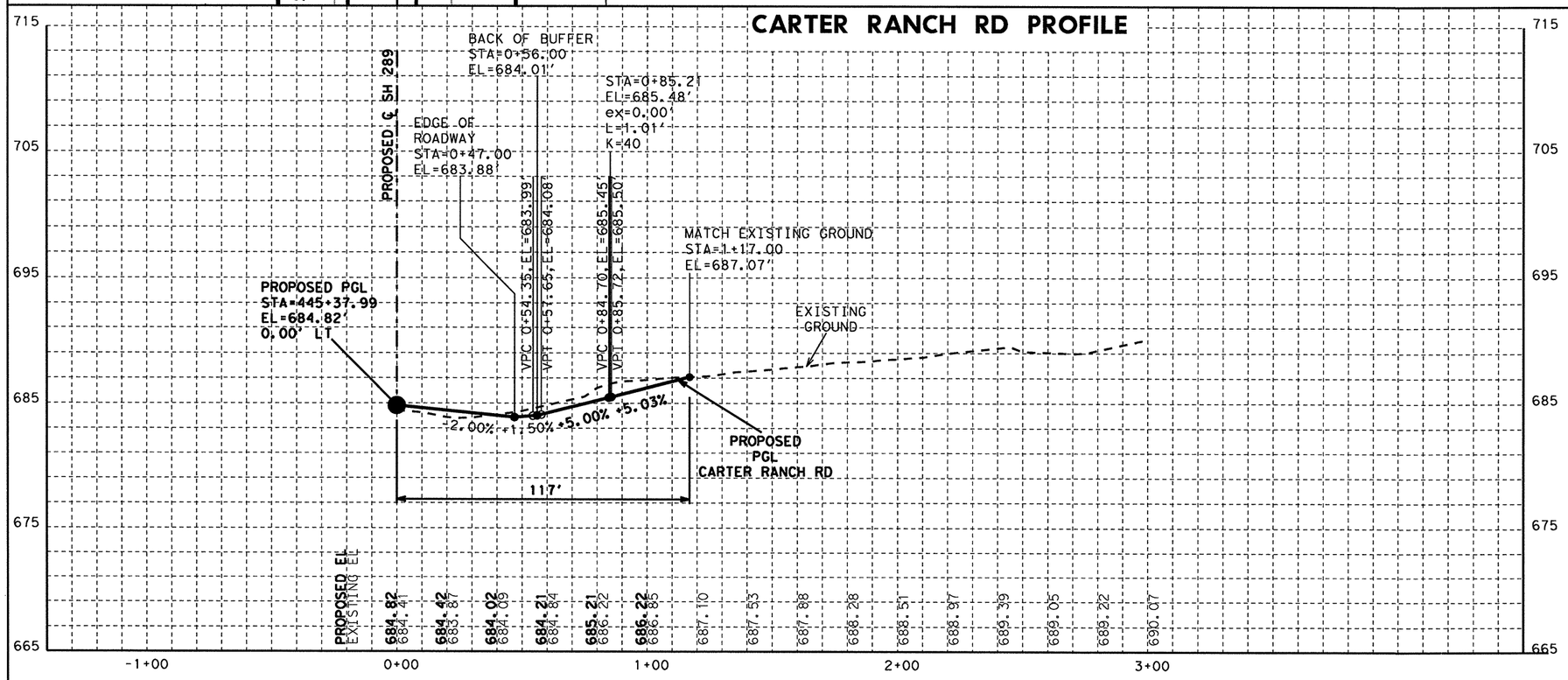

STATE OF TEXAS
NICHOLAS VON SPENCER
93702
LICENSED
PROFESSIONAL ENGINEER

Nicholas V Spencer, P.E. 4-7-11
Signature of Registrant & Date

Texas Department of Transportation
©2011

SH 289 AT CARTER RANCH RD
STA 445+37.99
PLAN AND PROFILE

SCALE: HOR 1"=50' & VER 1"=10' SHEET 2 OF 10

DESIGN	FED. RD. DIV. NO.	STATE PROJECT NO.		HIGHWAY NO.
HJL	6	SEE TITLE SHEET		SH 289
GRAPHICS HJL	STATE	DISTRICT	COUNTY	SHEET NO.
CHECK NVS	TEXAS	DALLAS	COLLIN	165
CHECK	CONTROL	SECTION	JOB	
	0091	04	055	

R-201104-01

CR 53 & CR 88 PLAN VIEW

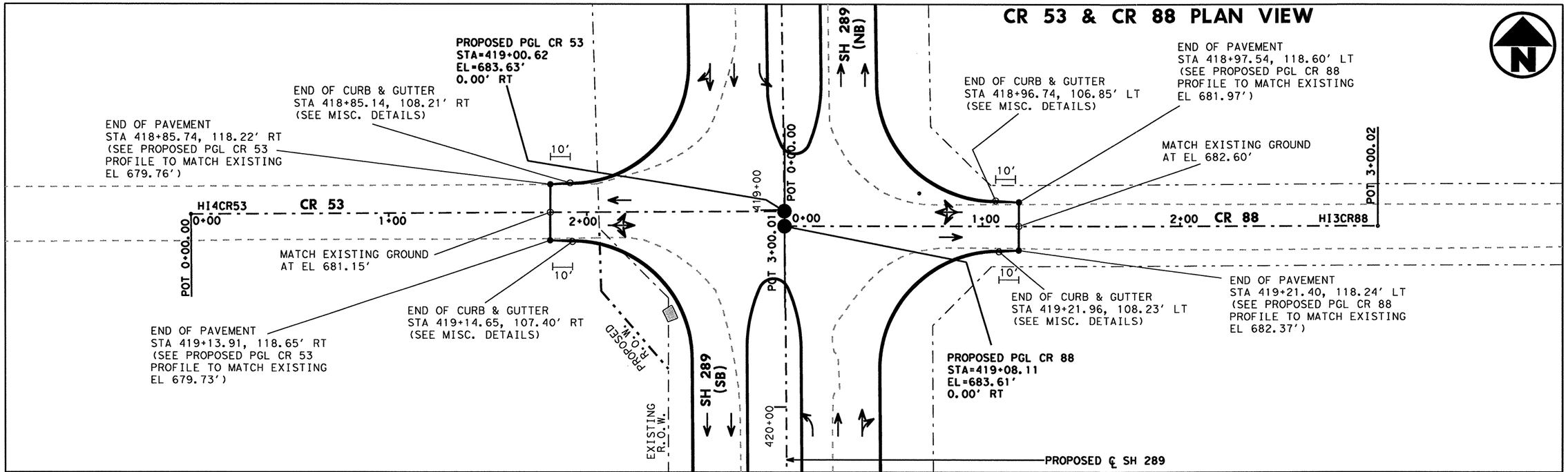

CR 53 & CR 88 PROFILE

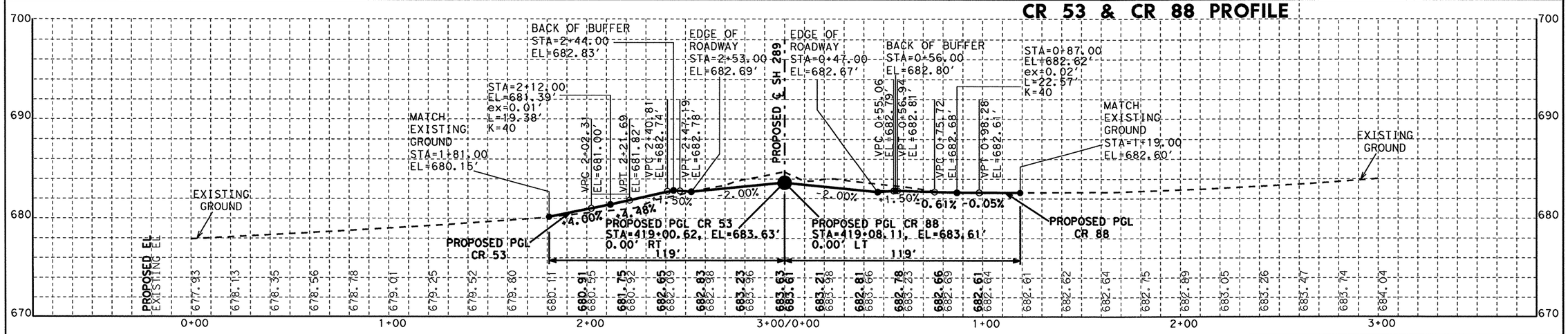

NOTES:

1. SEE MISC. DETAIL SHEET FOR CURB TRANSITION.
2. SEE HORIZONTAL DATA SHEETS FOR ALIGNMENT DATA.
3. SEE PAVEMENT MARKING SHEETS FOR PEDESTRIAN RAMP TYPES.
4. CR 88 & CR 53 DESIGN SPEED IS 30 MPH.

STATE OF TEXAS
NICHOLAS VON SPENCER
93702
LICENSED PROFESSIONAL ENGINEER

Signature of Registrant, P.E. & Date 4-7-11

Texas Department of Transportation
©2011

SH 289 AT CR 88, STA 419+08.11
SH 289 AT 53, STA 419+00.62
PLAN AND PROFILE

SCALE: 1"=50' & VER 1"=10' SHEET 3 OF 10

DESIGN	FED. RD. DIV. NO.	STATE PROJECT NO.		HIGHWAY NO.
HJL	6	SEE TITLE SHEET		SH 289
GRAPHICS HJL	STATE	DISTRICT	COUNTY	SHEET NO.
CHECK NVS	TEXAS	DALLAS	COLLIN	166
CHECK	CONTROL	SECTION	JOB	
	0091	04	055	

R-201104-01

CR 55 & CR 89 (HARPER SMITH RD) PLAN VIEW

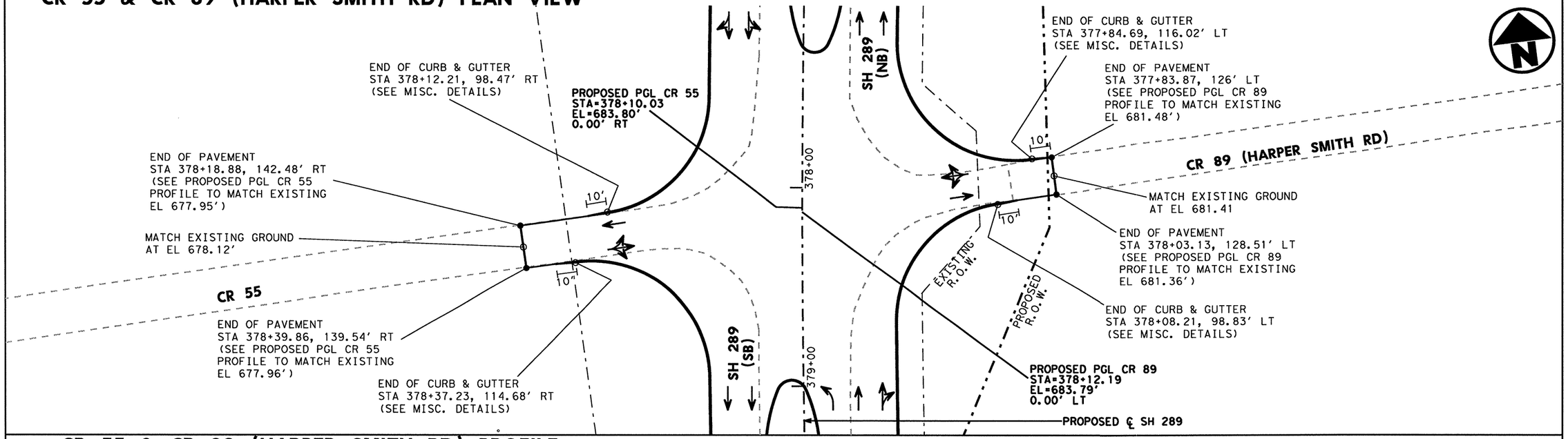

CR 55 & CR 89 (HARPER SMITH RD) PROFILE

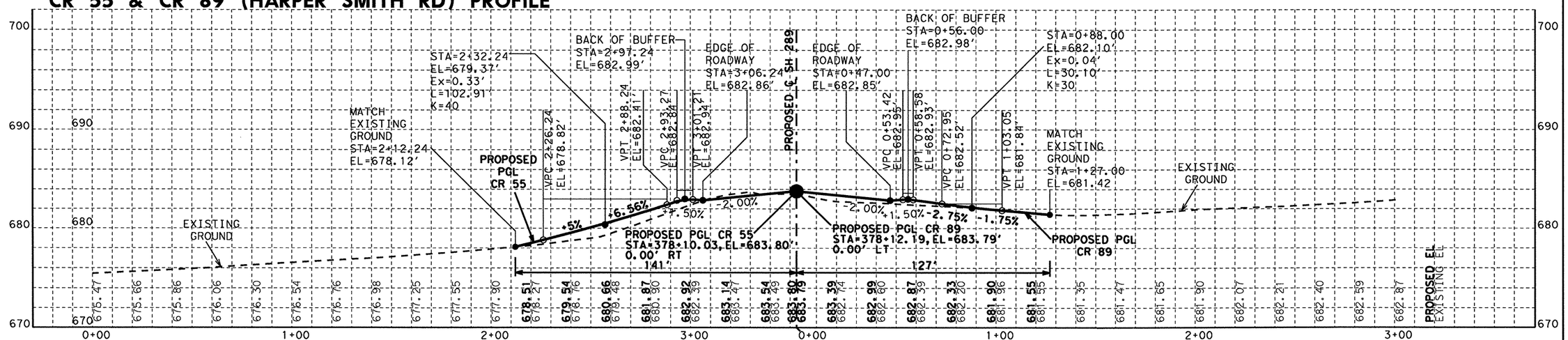

NOTES:

1. SEE MISC. DETAIL SHEET FOR CURB TRANSITION.
2. SEE HORIZONTAL DATA SHEETS FOR ALIGNMENT DATA.
3. SEE PAVEMENT MARKING SHEETS FOR PEDESTRIAN RAMP TYPES.
4. CR 89 & CR 55 DESIGN SPEED IS 30 MPH.

STATE OF TEXAS
NICHOLAS VON SPENCER
93702
LICENSED PROFESSIONAL ENGINEER

Signature of Registrant , P.E. & Date 4-7-11

Texas Department of Transportation
©2011

SH 289 AT CR 89, STA 378+12.19
SH 289 AT CR 55, STA 378+10.03
PLAN AND PROFILE

SCALE: HOR 1"=50' & VER 1"=10' SHEET 4 OF 10

DESIGN	FED. RD. DIV. NO.	STATE PROJECT NO.		HIGHWAY NO.
HJL	6	SEE TITLE SHEET		SH 289
GRAPHICS HJL	STATE	DISTRICT	COUNTY	SHEET NO.
CHECK NVS	TEXAS	DALLAS	COLLIN	167
CHECK	CONTROL	SECTION	JOB	
	0091	04	055	

R-201104-01

BUSINESS SH 289 PLAN VIEW

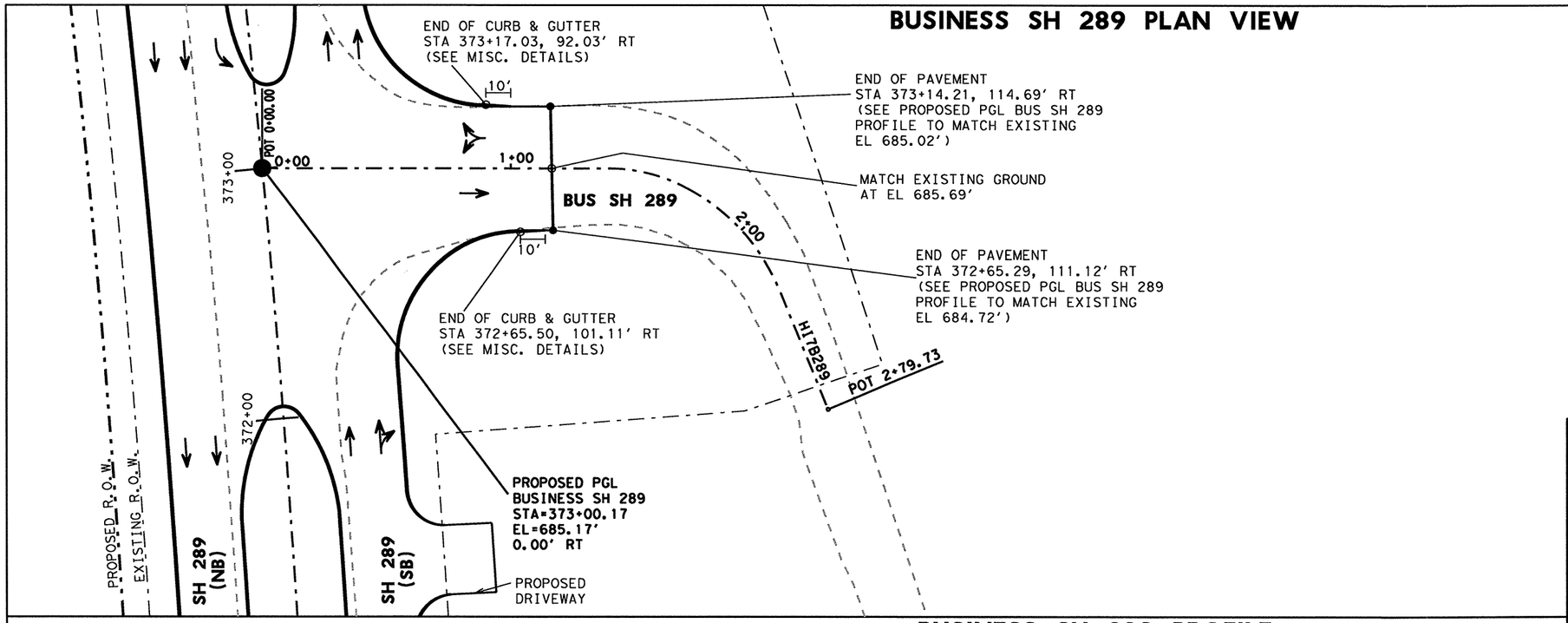

NOTES:

1. SEE MISC. DETAIL SHEET FOR CURB TRANSITION.
2. SEE HORIZONTAL DATA SHEETS FOR ALIGNMENT DATA.
3. SEE PAVEMENT MARKING SHEETS FOR PEDESTRIAN RAMP TYPES.
4. BUS SH 289 DESIGN SPEED IS 30 MPH.

BUSINESS SH 289 PROFILE

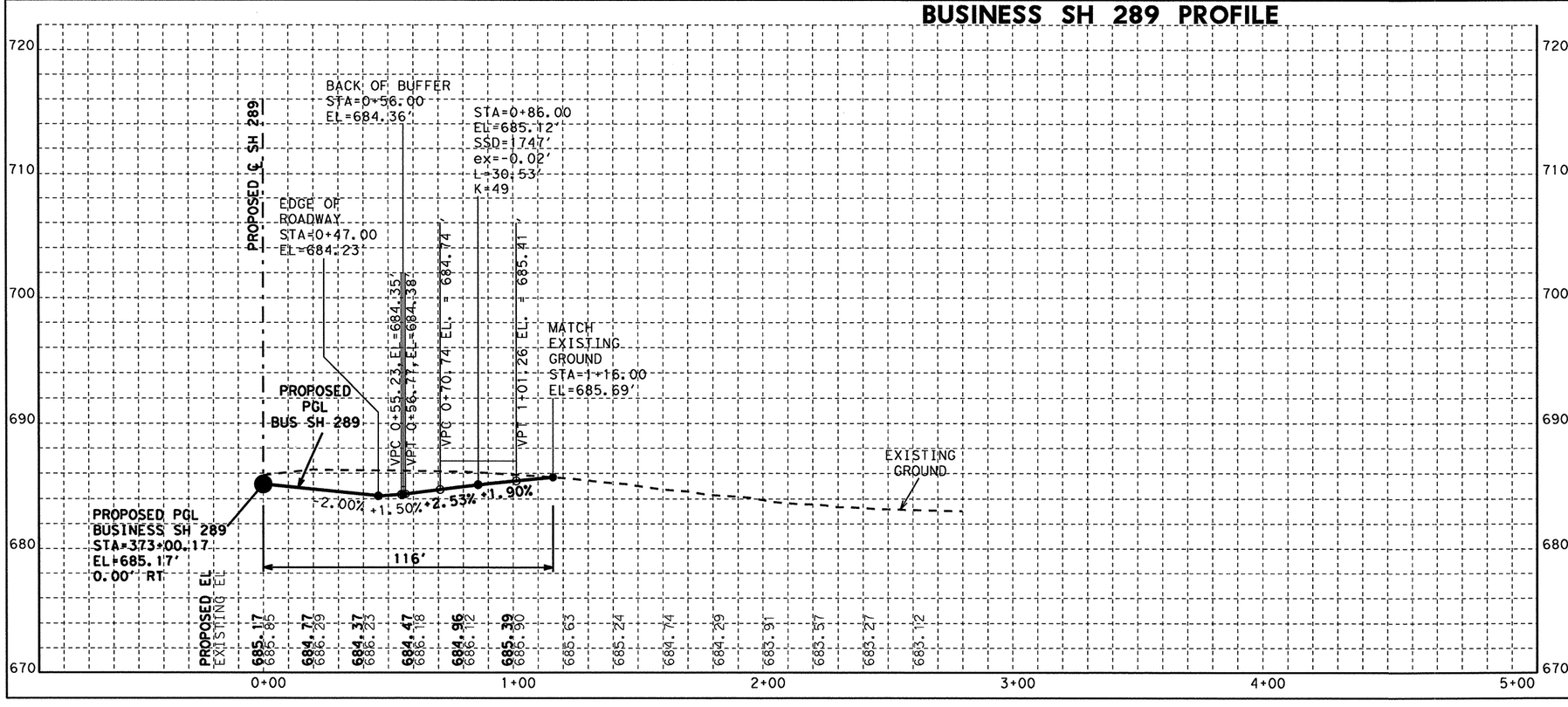

STATE OF TEXAS
NICHOLAS VON SPENCER
93702
LICENSED
PROFESSIONAL ENGINEER

Nicholas V Spencer, P.E. 4-7-11
Signature of Registrant & Date

Texas Department of Transportation
©2011

SH 289 AT BUSINESS SH 289 STA 373+00.17 PLAN AND PROFILE

SCALE: HOR 1"=50' & VER 1"=10' SHEET 5 OF 10

DESIGN	FED. RD. DIV. NO.	STATE PROJECT NO.		HIGHWAY NO.
HJL	6	SEE TITLE SHEET		SH 289
GRAPHICS HJL	STATE	DISTRICT	COUNTY	SHEET NO.
CHECK NVS	TEXAS	DALLAS	COLLIN	168
CHECK	CONTROL	SECTION	JOB	
	0091	04	055	

R-201104-01

CR 91 PLAN VIEW

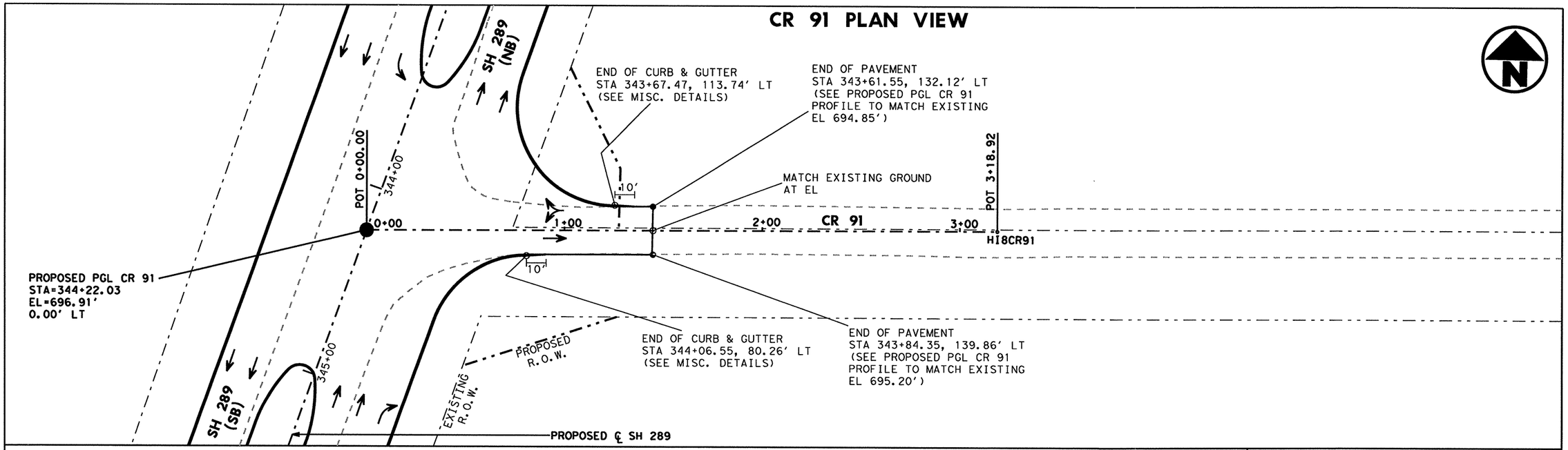

CR 91 PROFILE

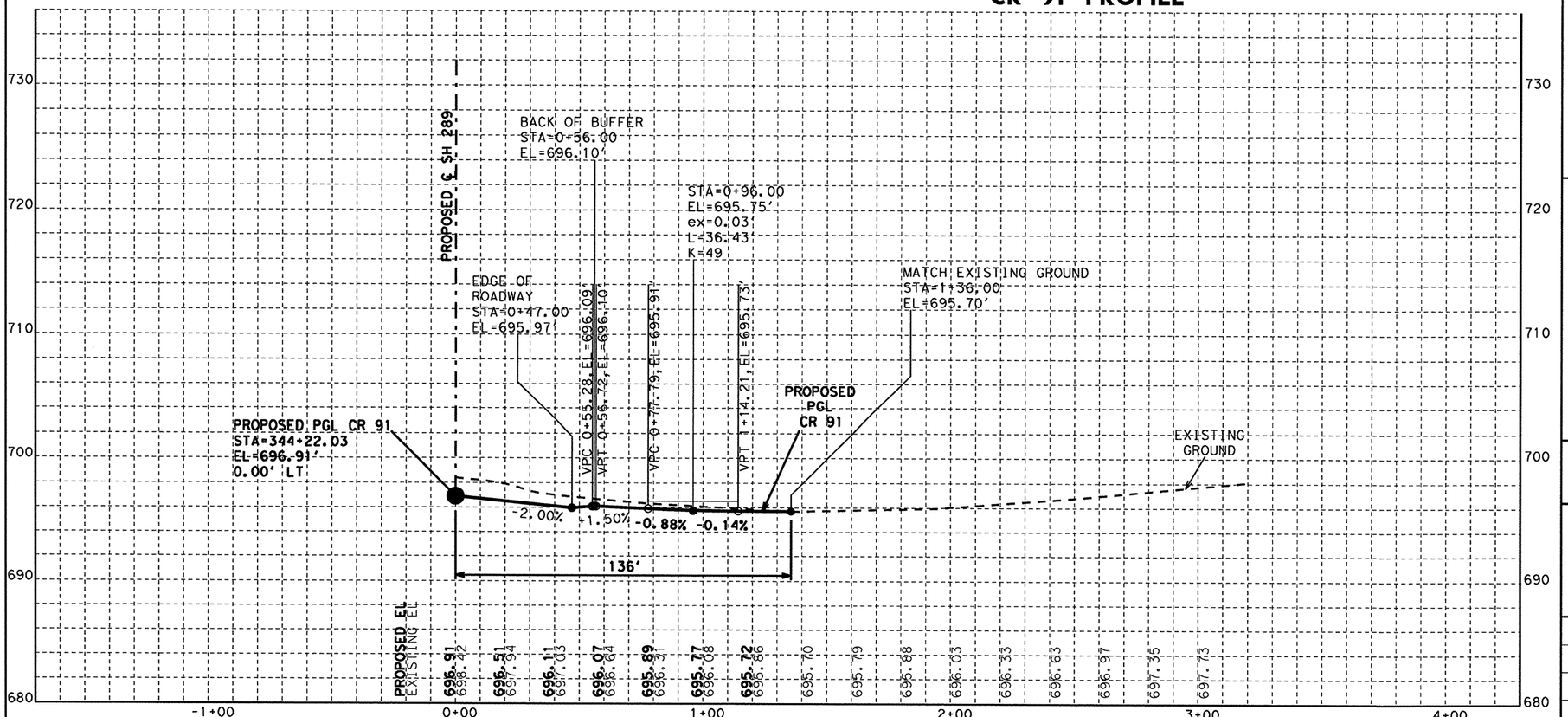

NOTES:

1. SEE MISC. DETAIL SHEET FOR CURB TRANSITION.
2. SEE HORIZONTAL DATA SHEETS FOR ALIGNMENT DATA.
3. SEE PAVEMENT MARKING SHEETS FOR PEDESTRIAN RAMP TYPES.
4. CR 91 DESIGN SPEED IS 30 MPH.

STATE OF TEXAS
NICHOLAS VON SPENCER
93702
LICENSED
PROFESSIONAL ENGINEER

Nicholas V Spencer, P.E. 4-7-11
Signature of Registrant & Date

Texas Department of Transportation
©2011

SH 289 AT CR 91
STA 344+22.03
PLAN AND PROFILE

SCALE: HOR 1"=50' & VER 1"=10' SHEET 6 OF 10

DESIGN	FED. RD. DIV. NO.	STATE PROJECT NO.		HIGHWAY NO.
HJL	6	SEE TITLE SHEET		SH 289
GRAPHICS HJL	STATE	DISTRICT	COUNTY	SHEET NO.
CHECK NVS	TEXAS	DALLAS	COLLIN	169
CHECK	CONTROL	SECTION	JOB	
	0091	04	055	

R-201104-01

E ASH ST PLAN VIEW

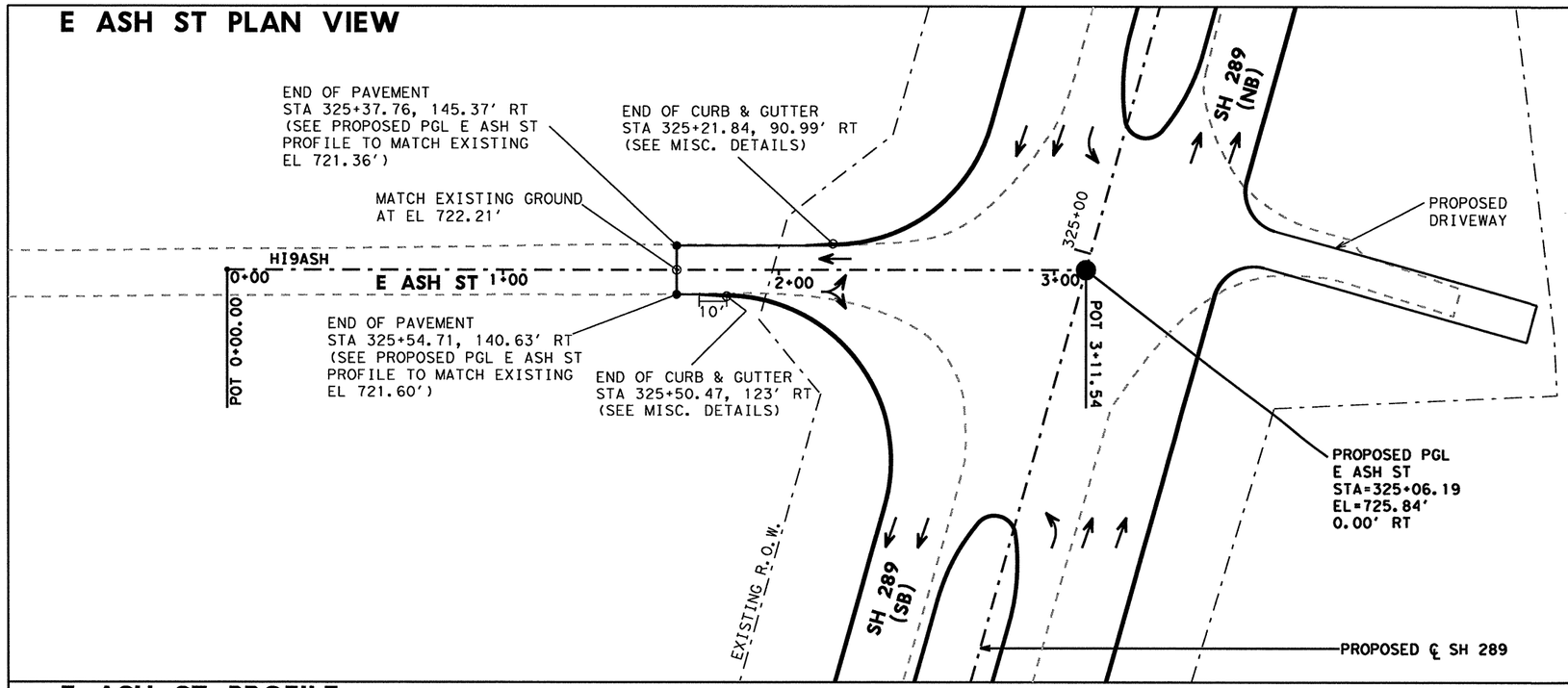

NOTES:

1. SEE MISC. DETAIL SHEET FOR CURB TRANSITION.
2. SEE HORIZONTAL DATA SHEETS FOR ALIGNMENT DATA.
3. SEE PAVEMENT MARKING SHEETS FOR PEDESTRIAN RAMP TYPES.
4. E ASH ST DESIGN SPEED IS 30 MPH.

E ASH ST PROFILE

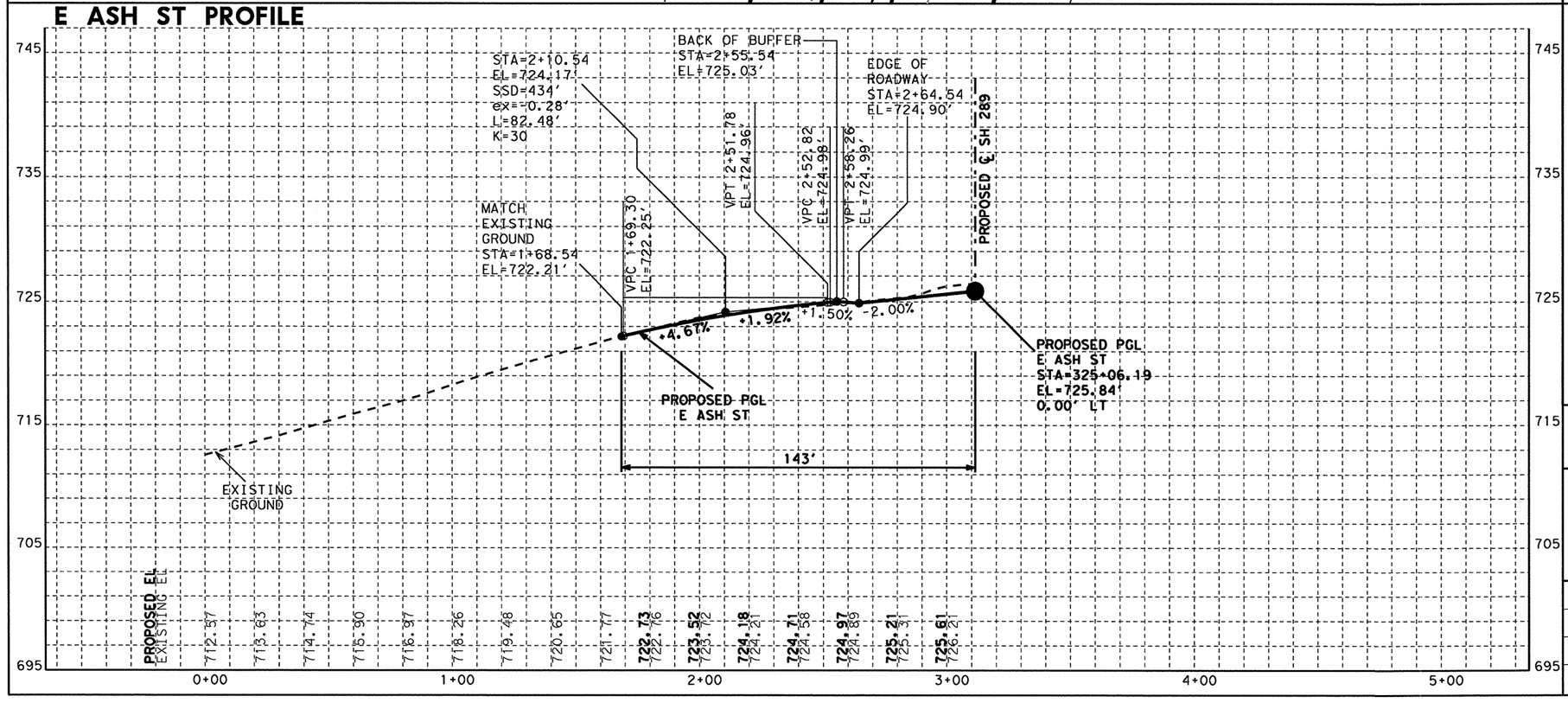

STATE OF TEXAS
NICHOLAS VON SPENCER
93702
LICENSED
PROFESSIONAL ENGINEER

Nicholas V Spencer, P.E. 4-7-11
Signature of Registrant & Date

Texas Department of Transportation
©2011

SH 289 AT E ASH ST
STA 325+06.19
PLAN AND PROFILE

SCALE: HOR 1"=50' & VER 1"=10' SHEET 7 OF 10

DESIGN	FED. RD. DIV. NO.	STATE PROJECT NO.		HIGHWAY NO.
HJL	6	SEE TITLE SHEET		SH 289
GRAPHICS HJL	STATE	DISTRICT	COUNTY	SHEET NO.
CHECK NVS	TEXAS	DALLAS	COLLIN	170
CHECK	CONTROL	SECTION	JOB	
	0091	04	055	

R-201104-01

E ELM ST PLAN VIEW

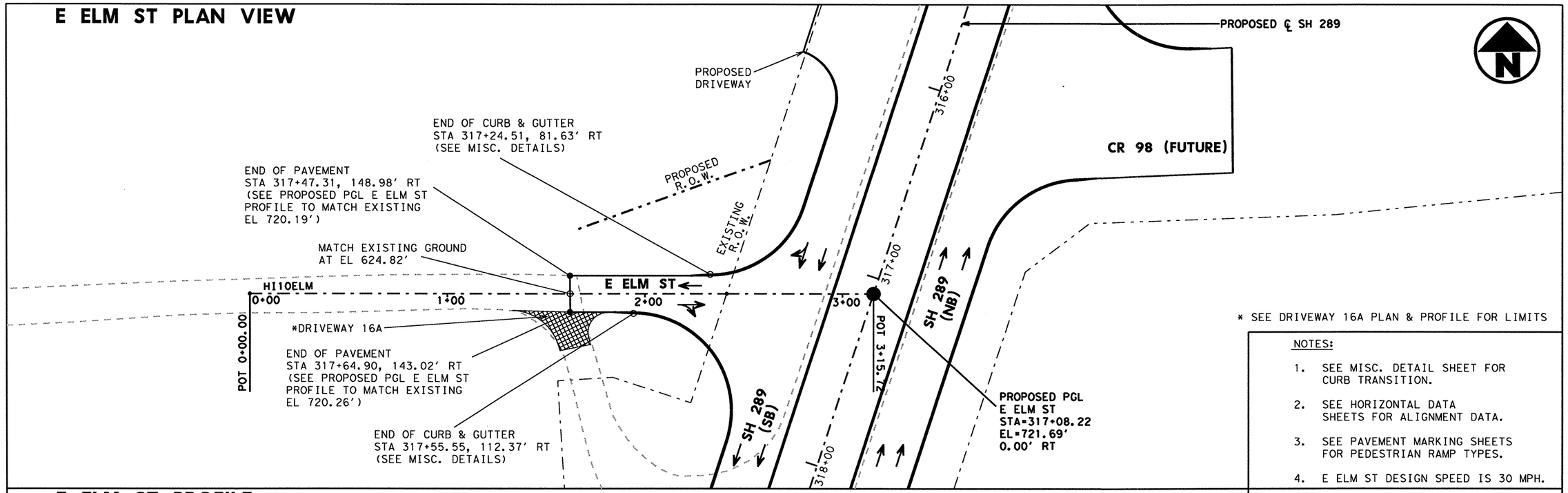

NOTES:

1. SEE MISC. DETAIL SHEET FOR CURB TRANSITION.
2. SEE HORIZONTAL DATA SHEETS FOR ALIGNMENT DATA.
3. SEE PAVEMENT MARKING SHEETS FOR PEDESTRIAN RAMP TYPES.
4. E ELM ST DESIGN SPEED IS 30 MPH.

E ELM ST PROFILE

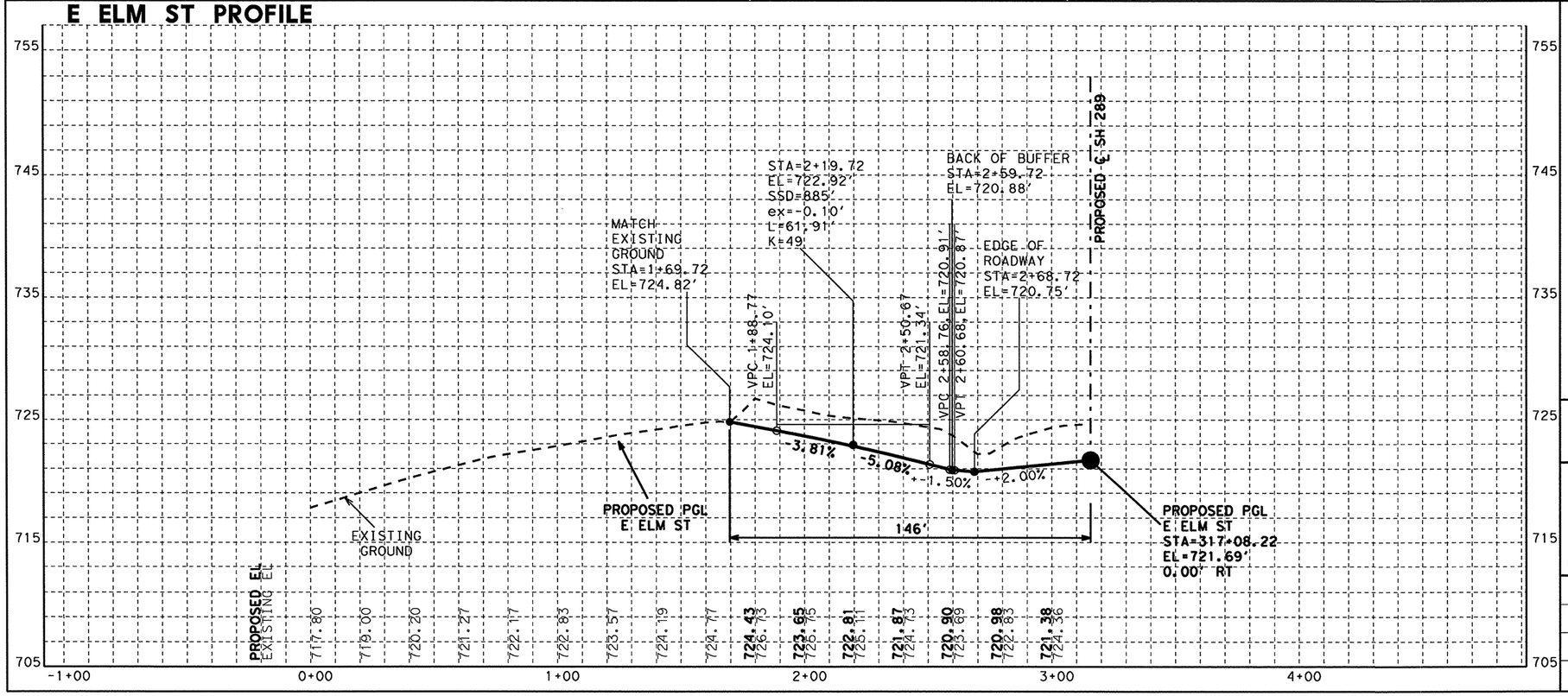

STATE OF TEXAS
NICHOLAS VON SPENCER
93702
LICENSED PROFESSIONAL ENGINEER

Signature of Registrant & Date, P.E. 5-26-11

Texas Department of Transportation
©2011

SH 289 AT E ELM ST
STA 317+08.22
PLAN AND PROFILE

SCALE: HOR 1"=50' & VER 1"=10' SHEET 8 OF 10

DESIGN	FED.RD. DIV.NO.	STATE PROJECT NO.		HIGHWAY NO.
HJL	6	SEE TITLE SHEET		SH 289
GRAPHICS HJL	STATE	DISTRICT	COUNTY	SHEET NO.
CHECK NVS	TEXAS	DALLAS	COLLIN	171
CHECK	CONTROL	SECTION	JOB	
	0091	04	055	

R-201104-01

CR 98 (FUTURE) PLAN VIEW

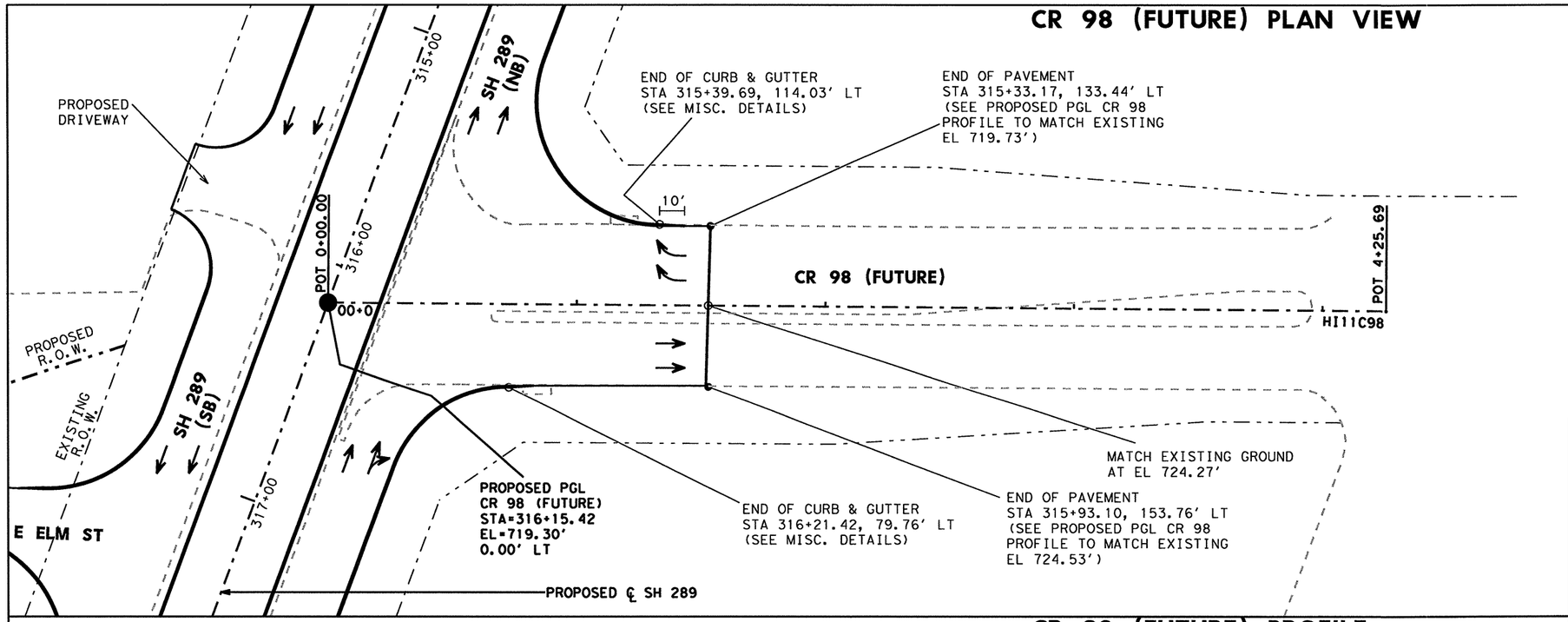

NOTES:

1. SEE MISC. DETAIL SHEET FOR CURB TRANSITION.
2. SEE HORIZONTAL DATA SHEETS FOR ALIGNMENT DATA.
3. SEE PAVEMENT MARKING SHEETS FOR PEDESTRIAN RAMP TYPES.
4. CR 98 DESIGN SPEED IS 30 MPH.

CR 98 (FUTURE) PROFILE

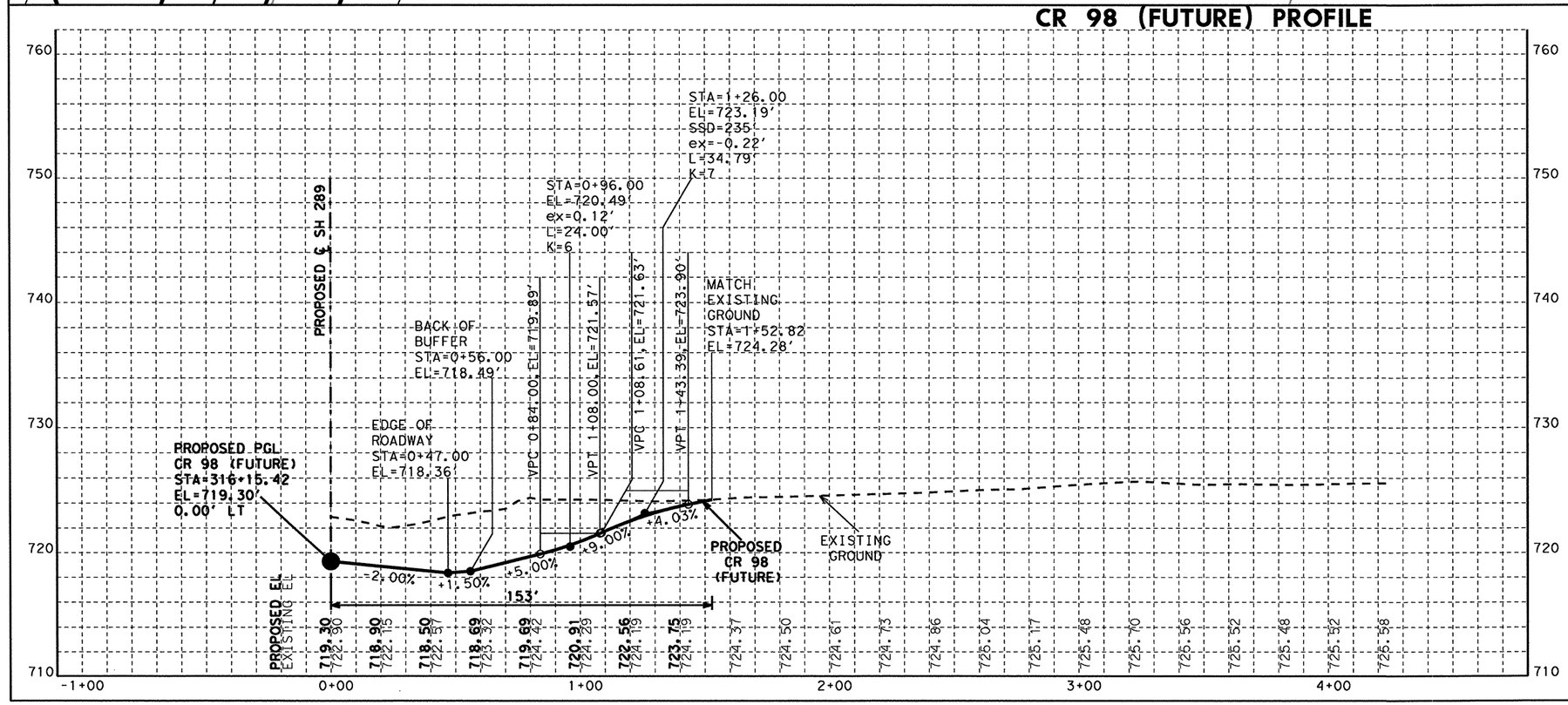

STATE OF TEXAS
NICHOLAS VON SPENCER
93702
LICENSED
PROFESSIONAL ENGINEER

Nicholas Von Spencer, P.E. 4-7-11
Signature of Registrant & Date

Texas Department of Transportation
©2011

SH 289 AT CR 98 (FUTURE)
STA 316+15.42
PLAN AND PROFILE

SCALE: HOR 1"=50' & VER 1"=10' SHEET 9 OF 10

DESIGN	FED. RD. DIV. NO.	STATE PROJECT NO.		HIGHWAY NO.
HJL	6	SEE TITLE SHEET		SH 289
GRAPHICS HJL	STATE	DISTRICT	COUNTY	SHEET NO.
CHECK NVS	TEXAS	DALLAS	COLLIN	172
CHECK	CONTROL	SECTION	JOB	
	0091	04	055	

R-201104-01

FM 455 PLAN VIEW

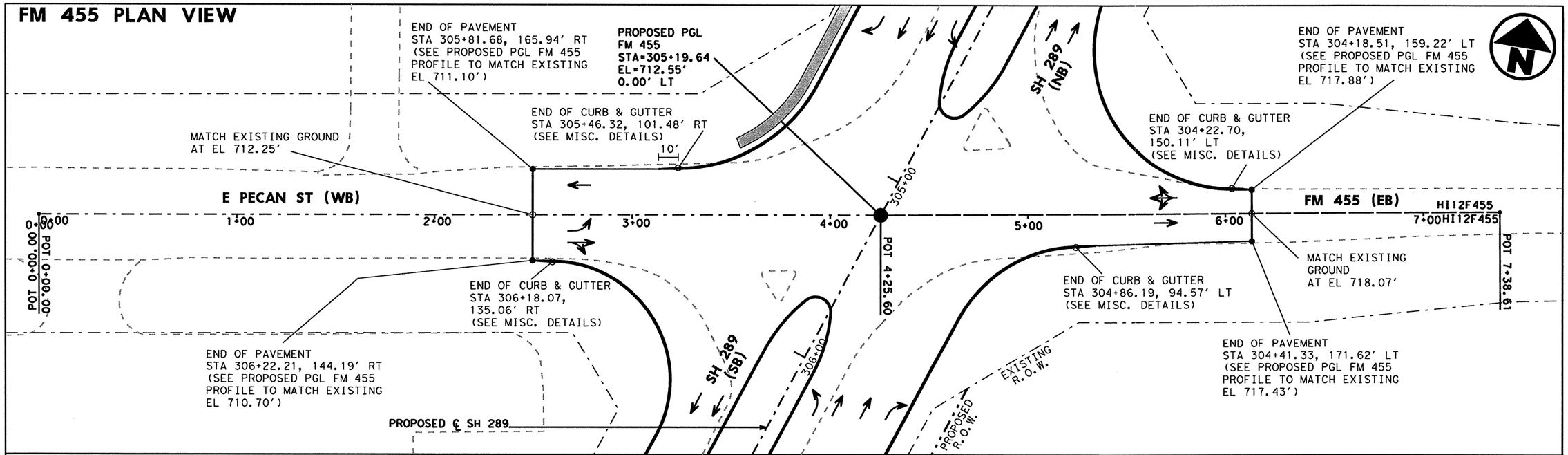

FM 455 PROFILE

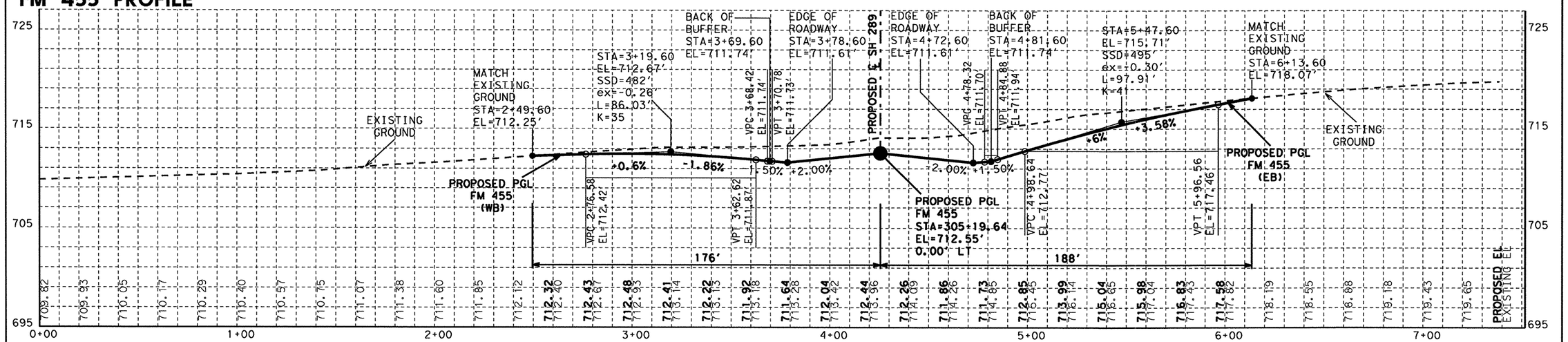

NOTES:

1. SEE MISC. DETAIL SHEET FOR CURB TRANSITION.
2. SEE HORIZONTAL DATA SHEETS FOR ALIGNMENT DATA.
3. SEE PAVEMENT MARKING SHEETS FOR PEDESTRIAN RAMP TYPES.
4. FM 455 DESIGN SPEED IS 30 MPH.

STATE OF TEXAS
NICHOLAS VON SPENCER
93702
LICENSED PROFESSIONAL ENGINEER

Nicholas V Spencer, P.E. 4-7-11
Signature of Registrant & Date

Texas Department of Transportation
©2011

SH 289 AT FM 455 (E PECAN ST) STA 305+19.64 PLAN AND PROFILE

SCALE: HOR 1"=50' & VERT 1"=10' SHEET 10 OF 10

DESIGN HJL	FED. RD. DIV. NO.	STATE PROJECT NO.		HIGHWAY NO.
GRAPHICS HJL	6	SEE TITLE SHEET		SH 289
	STATE	DISTRICT	COUNTY	SHEET NO.
CHECK NVS	TEXAS	DALLAS	COLLIN	173
CHECK	CONTROL	SECTION	JOB	
	0091	04	055	

R-201104-01

DRIVEWAY									CENTERLINE STATION	PROPOSED PGL ELEVATION (FT)	ACP DRIVEWAY ENDS				CONCRETE DRIVEWAY ENDS			
NO.	SHEET NO.	NAME	FROM STA	TO STA	TYPE	PROPERTY DESCRIPTION	RADIUS (FT)	WIDTH (FT)			STA	AT ELE (FT)	STA	AT ELE (FT)	STA	AT ELE (FT)	STA	AT ELE (FT)
1	1 OF 23	NBDW1	0+00.00	1+30.00	COMMERCIAL	MICHAEL D. BOBB	15	14	513+27.78	702.92	513+20.78	702.11	513+34.78	702.24				
2	1 OF 23	NBDW2	0+00.00	1+30.00	COMMERCIAL	MARK A & JENNIFER S MATIE	15	20	510+40.23	693.07					510+30.30	691.93	510+50.17	691.91
3	2 OF 23	NBDW3	0+00.00	1+30.00	COMMERCIAL	HEUSSNER MANAGEMENT, LTD.	15	14	501+57.67	674.69					501+50.67	670.91	501+64.67	670.90
4	2 OF 23	NBDW4	0+00.00	1+30.00	COMMERCIAL	HEUSSNER MANAGEMENT, LTD.	15	24	498+98.77	673.66					498+86.77	673.55	499+10.77	673.77
5	3 OF 23	NBDW5	0+00.00	1+00.00	RESIDENTIAL	CARTER RANCH #1 HOA	25	18	463+72.01	683.44					463+52.46	686.21	463+76.23	685.94
6	3 OF 23	NBDW6	0+00.00	1+30.00	RESIDENTIAL	THE CARTER RANCH-PHASE IIA HOMEOWNERS ASSOCIATION	25	30	442+42.27	680.46	442+27.27	682.70	442+57.27	683.20				
7	4 OF 23	NBDW7	0+00.00	1+04.72	RESIDENTIAL	THE CARTER RANCH-PHASE IIA HOMEOWNERS ASSOCIATION	25	14	437+92.81	678.26					437+85.81	677.23	437+99.81	677.38
8	4 OF 23	NBDW8	0+00.00	1+30.00	COMMERCIAL	CENTRAL FRISCO, LTD.	15	14	413+11.97	681.65					413+04.97	681.37	413+18.97	681.43
9	5 OF 23	NBDW9	0+00.00	1+30.00	COMMERCIAL	CHARLA LEE CHOATE	15	14	391+93.07	678.68	391+86.07	676.35	392+00.07	683.20				
10	5 OF 23	NBDW10	0+00.00	1+30.00	COMMERCIAL	VERA LUCILE JINKS	15	14	390+37.65	678.52					390+30.65	677.35	390+44.65	677.13
11	6 OF 23	NBDW11	0+00.00	1+30.00	COMMERCIAL	JAMES-CHAN WU & CHIN-CHAO WU	15	14	366+34.72	688.99	366+27.72	689.69	366+41.72	689.45				
11A	6 OF 23	SB17A	0+00.00	1+66.55	COMMERCIAL	INDEPENDENT STATE BANK OF CELINA	25	24	311+71.26	708.83					311+59.29	706.75	311+59.29	706.75
12	7 OF 23	NBDW12	0+00.00	3+00.00	RESIDENTIAL	GURLEY, LTD.	15	14	355+40.80	698.66	355+19.61	721.22	355+31.63	721.30				
13	8 OF 23	NBDW13	0+00.00	1+30.00	COMMERCIAL	CELINA TOWN CENTER, LTD.	15	14	351+61.84	696.49	351+54.84	698.77	351+68.84	699.48				
13A	8 OF 23	NB16A	0+00.00	0+88.97	RESIDENTIAL	AUTHUR MACK	15	15	319+13.44	726.36								
14	9 OF 23	NBDW14	0+00.00	1+70.00	COMMERCIAL	BROOKSHIRE GROCERY COMPANY	35	53	347+65.29	695.73					347+33.94	699.12	347+95.01	699.58
15	10 OF 23	NBDW15	0+00.00	1+70.00	COMMERCIAL	OLD CELINA LTD.	15	14	324+81.02	726.21	324+74.02	738.09	324+88.02	737.67				
16	10 OF 23	NBDW16	0+00.00	1+20.36	COMMERCIAL	CATTLEMANS CROSSING ADDITION	25	28	319+34.17	726.70					319+05.12	732.26	319+36.62	732.58
17	11 OF 23	SBDW17	0+00.00	1+50.00	COMMERCIAL	CELINA SC, LTD.	25	27	308+36.94	707.44					308+23.67	705.25	308+50.55	704.35
18	11 OF 23	SBDW18	0+00.00	1+10.00	COMMERCIAL	201 PRESTON ROAD, LLC	25	28	315+88.76	718.61					315+74.76	717.89	316+02.76	717.89
19	12 OF 23	SBDW19	0+00.00	1+20.00	COMMERCIAL	CELINA SELF STORAGE, LP	25	20	338+56.51	696.85					338+46.51	695.27	338+66.51	694.82
20	12 OF 23	SBDW20	0+00.00	1+10.00	COMMERCIAL	LINDA L KELLERHOUSE	15	14	352+37.45	696.84	352+30.45	691.92	352+44.45	692.49				
21	13 OF 23	SBDW21	0+00.00	1+10.00	COMMERCIAL	DENTON/NORTH TEXAS AND HERRIN REAL ESTATE	25	44	360+35.70	695.93					360+26.49	694.56	360+57.70	694.31
22	13 OF 23	SBDW22	0+00.00	1+10.00	COMMERCIAL	AUTOMOTIVE PROPERTIES, L.P.	25	28	364+72.20	690.87					364+58.20	687.96	364+86.20	687.65
23	14 OF 23	SBDW23	0+00.00	1+10.00	COMMERCIAL	AUTOMOTIVE PROPERTIES, L.P.	25	28	366+50.25	688.80					366+36.25	686.04	366+64.25	685.56
24	14 OF 23	SBDW24	0+00.00	1+10.00	COMMERCIAL	ANISE BAWA	15	28	370+56.32	684.55					370+42.52	684.92	370+70.13	684.76
25	15 OF 23	SBDW25	0+00.00	1+10.00	COMMERCIAL	ANISE BAWA	15	28	371+39.07	684.53					371+25.14	684.68	371+52.75	684.40
26	15 OF 23	SBDW26	0+00.00	1+00.00	COMMERCIAL	TXDOT	25	20	374+74.01	685.25	374+64.17	681.69	374+83.86	681.61				
27	16 OF 23	SBDW27	0+00.00	1+10.04	COMMERCIAL	TXDOT	25	17	376+31.11	684.57	376+19.98	680.83	376+36.70	680.17				
28	16 OF 23	SBDW28	0+00.00	1+00.00	RESIDENTIAL	OLD CELINA LTD.	15	14	387+95.00	679.56					387+88.00	679.42	388+02.00	679.03
29	17 OF 23	SBDW29	0+00.00	1+10.00	COMMERCIAL	OLD CELINA LTD.	15	14	390+15.68	678.61					390+08.68	676.30	390+22.68	676.08
30	17 OF 23	SBDW30	0+00.00	2+00.00	COMMERCIAL	OLD CELINA LTD.	15	14	394+24.38	679.73	394+17.38	673.80	394+31.38	673.68				
31	18 OF 23	SBDW31	0+00.00	1+40.00	COMMERCIAL	FELIX Y. CHEN	15	14	406+17.07	678.76	406+10.07	670.79	406+24.07	670.94				
32	18 OF 23	SBDW32	0+00.00	1+35.00	COMMERCIAL	FELIX Y. CHEN	15	14	410+57.58	680.59	410+50.58	677.85	410+64.58	677.92				
33	19 OF 23	SBDW33	0+00.00	1+40.00	COMMERCIAL	OWNSBY 1880 FARMS, LTD.	15	14	456+73.55	698.00	456+66.52	699.40	456+80.57	699.07				
34	19 OF 23	SBDW34	0+00.00	1+50.00	COMMERCIAL	OWNSBY 1880 FARMS, LTD.	15	14	465+34.85	681.84	465+27.96	679.30	465+41.96	679.11				
35	20 OF 23	SBDW35	0+00.00	1+40.00	COMMERCIAL	OWNSBY 1880 FARMS, LTD.	15	14	480+15.59	685.78	480+08.63	687.09	480+22.59	686.91				
36	20 OF 23	SBDW36	0+00.00	1+40.00	COMMERCIAL	OWNSBY 1880 FARMS, LTD.	15	14	494+21.39	671.75	494+14.40	666.99	494+28.40	667.20				
37	21 OF 23	SBDW37	0+00.00	1+40.00	COMMERCIAL	J. ALTUS, INC.	15	14	501+70.14	674.74	501+63.48	667.71	501+77.48	667.79				
38	21 OF 23	SBDW38	0+00.00	1+40.00	COMMERCIAL	JOHN FEIZY	15	14	505+13.02	677.49	505+06.02	670.62	505+20.02	671.11				
39	22 OF 23	SBDW39	0+00.00	1+50.00	COMMERCIAL	RAY A. HALLFORD	15	24	509+29.59	689.27	509+17.47	689.17	509+41.70	689.70				
40	22 OF 23	SBDW40	0+00.00	1+50.00	COMMERCIAL	SUSIE KING	25	28	513+05.56	702.16	512+91.25	705.65	513+19.25	706.02				
41	23 OF 23	SBDW41	0+00.00	1+50.00	COMMERCIAL	J. ALTUS, INC.	25	28	516+40.67	713.65					516+26.67	712.45	516+54.67	713.59

NOTES: A. SEE DRIVEWAY DETAILS FOR TIE IN LIMITS.
B. SEE PROJECT LAYOUT AND ADVANCED WARNING SIGN FOR DRIVEWAY LOCATION
C. ABBREBRIATIONS:
1 NBDW=NORTHBOUND DRIVEWAY
2 SBDW=SOUTHBOUND DRIVEWAY

Texas Department of Transportation
©2011

SH 289 DRIVEWAY DATA

SCALE: NOT TO SCALE

SHEET 1 OF 1

DESIGN	FED. RD. DIV. NO.	STATE PROJECT NO.		HIGHWAY NO.
HJL	6	SEE TITLE SHEET		SH 289
GRAPHICS HJL	STATE	DISTRICT	COUNTY	SHEET NO.
CHECK NVS	TEXAS	DALLAS	COLLIN	174
CHECK	CONTROL	SECTION	JOB	
	0091	04	055	

DRIVEWAY 1

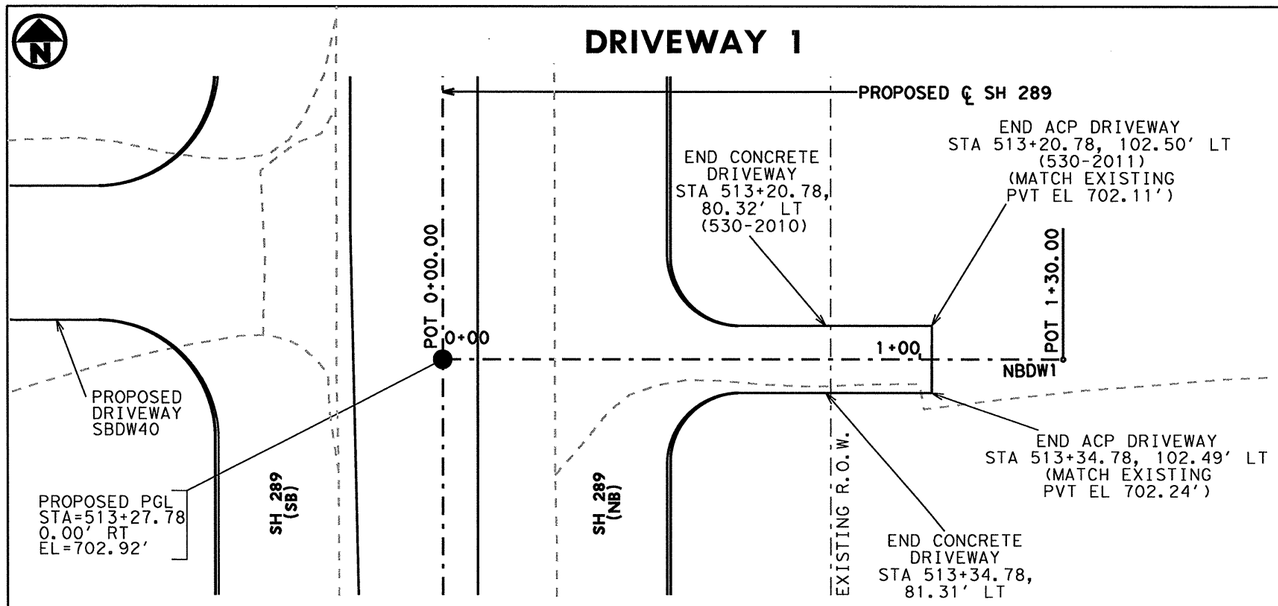

PLAN VIEW

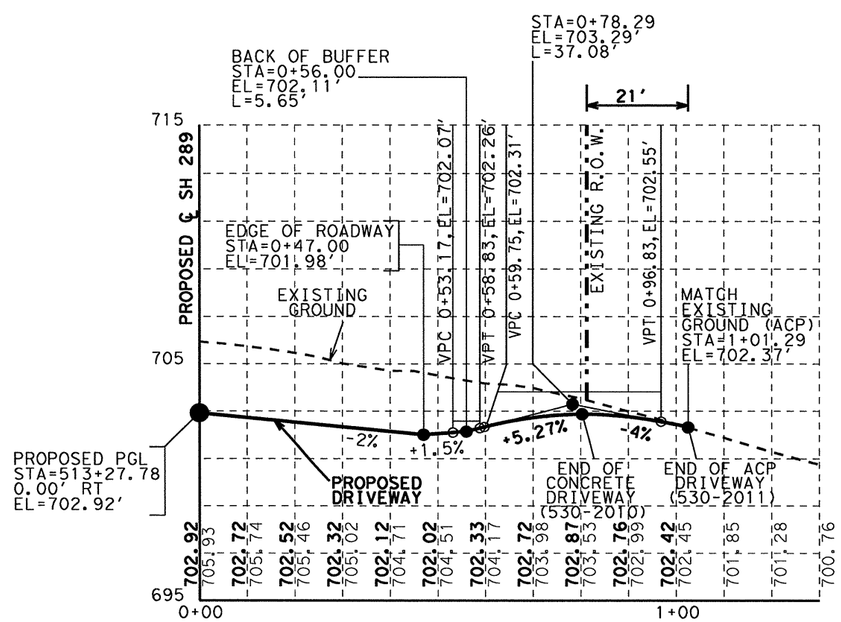

PROFILE

NOTES:

1. SEE DRIVEWAY DETAILS FOR TIE IN LIMITS.
2. SEE PROJECT LAYOUT WITH ADVANCED WARNING SIGNS FOR DRIVEWAY LOCATION.

DRIVEWAY 2

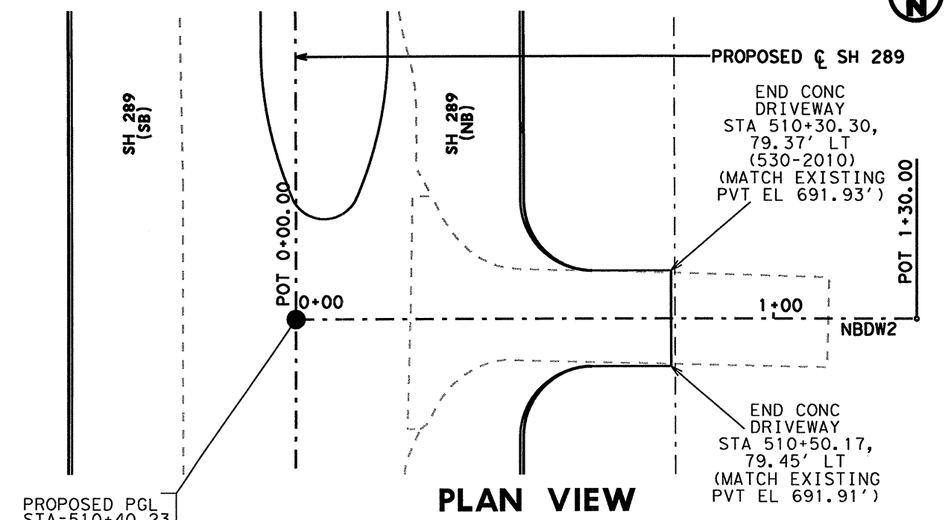

PLAN VIEW

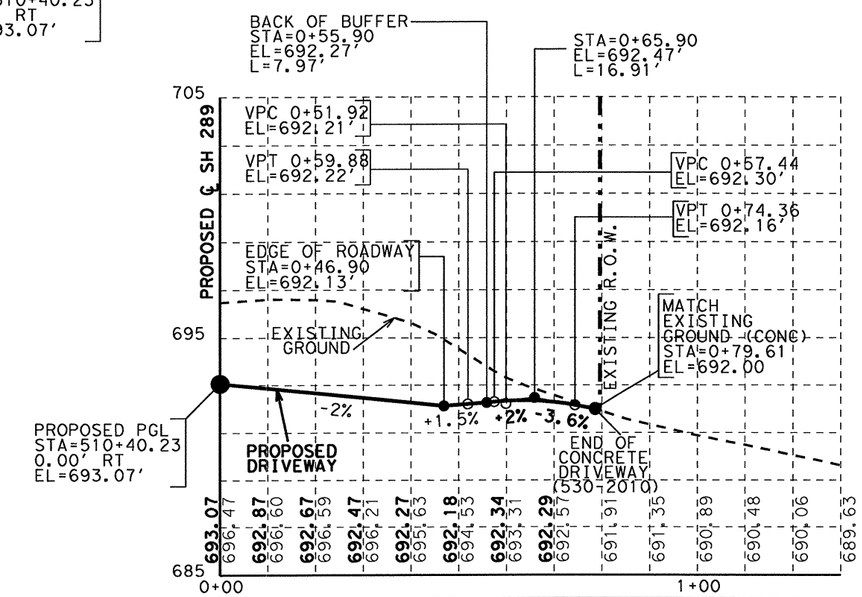

STATE OF TEXAS
NICHOLAS VON SPENCER
93702
LICENSED
PROFESSIONAL ENGINEER

Nicholas Von Spencer, P.E. 4-7-11
Signature of Registrant & Date

Texas Department of Transportation
©2011

SH 289 DRIVEWAY 1 & 2 PLAN AND PROFILE

SCALE: HOR 1"=30' & VER 1"= 60' SHEET 1 OF 23

DESIGN	FED. RD. DIV. NO.	STATE PROJECT NO.		HIGHWAY NO.
HJL	6	SEE TITLE SHEET		SH 289
GRAPHICS HJL	STATE	DISTRICT	COUNTY	SHEET NO.
CHECK NVS	TEXAS	DALLAS	COLLIN	175
CHECK	CONTROL	SECTION	JOB	
	0091	04	055	

R-201104-01

DRIVEWAY 3

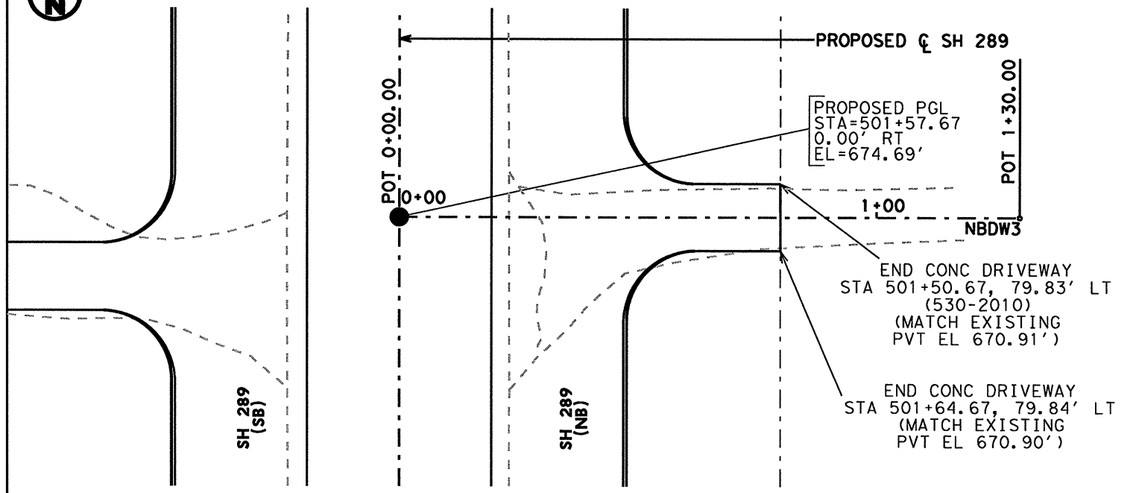

PLAN VIEW

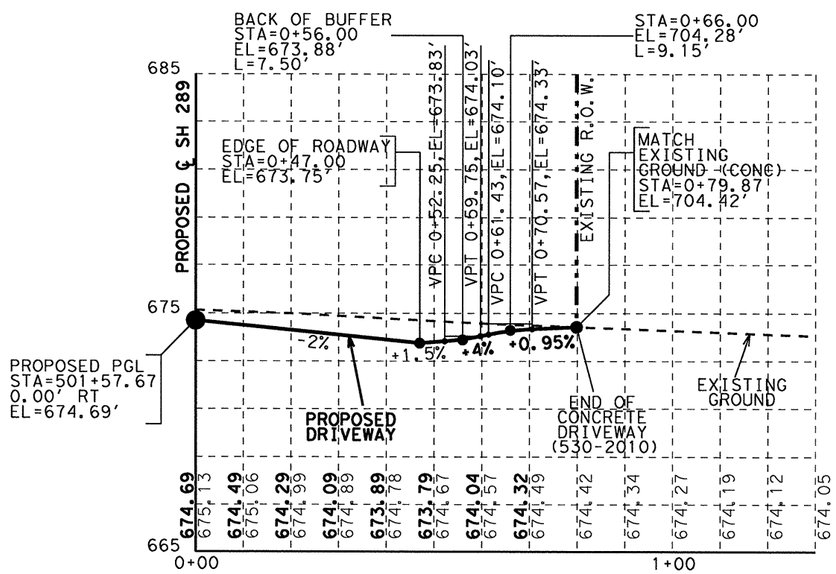

PROFILE

DRIVEWAY 4

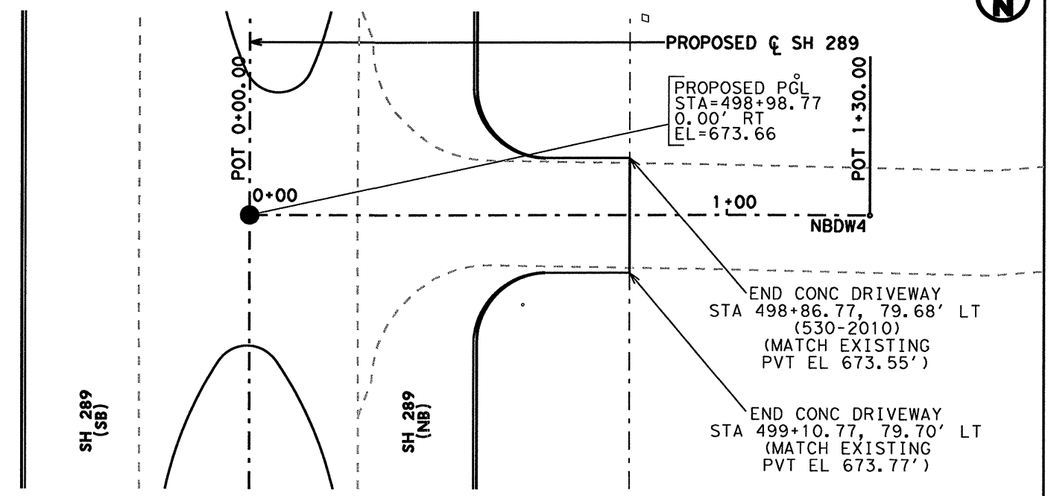

PLAN VIEW

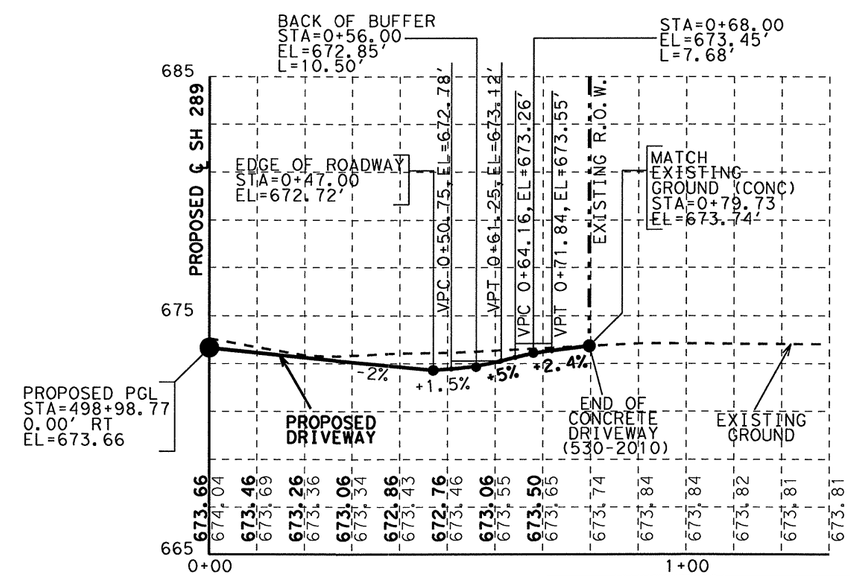

PROFILE

NOTES:

1. SEE DRIVEWAY DETAILS FOR TIE IN LIMITS.
2. SEE PROJECT LAYOUT WITH ADVANCED WARNING SIGNS FOR DRIVEWAY LOCATION.

STATE OF TEXAS
NICHOLAS VON SPENCER
93702
LICENSED
PROFESSIONAL ENGINEER

Nicholas V Spencer, P.E. 4-7-11
Signature of Registrant & Date

Texas Department of Transportation
©2011

SH 289 DRIVEWAY 3 & 4 PLAN AND PROFILE

SCALE: HOR 1"=30' & VER 1"= 60' SHEET 2 OF 23

DESIGN	FED. RD. DIV. NO.	STATE PROJECT NO.		HIGHWAY NO.
HJL	6	SEE TITLE SHEET		SH 289
GRAPHICS HJL	STATE	DISTRICT	COUNTY	SHEET NO.
CHECK NVS	TEXAS	DALLAS	COLLIN	176
CHECK	CONTROL	SECTION	JOB	
	0091	04	055	

R-201104-01

DRIVEWAY 5

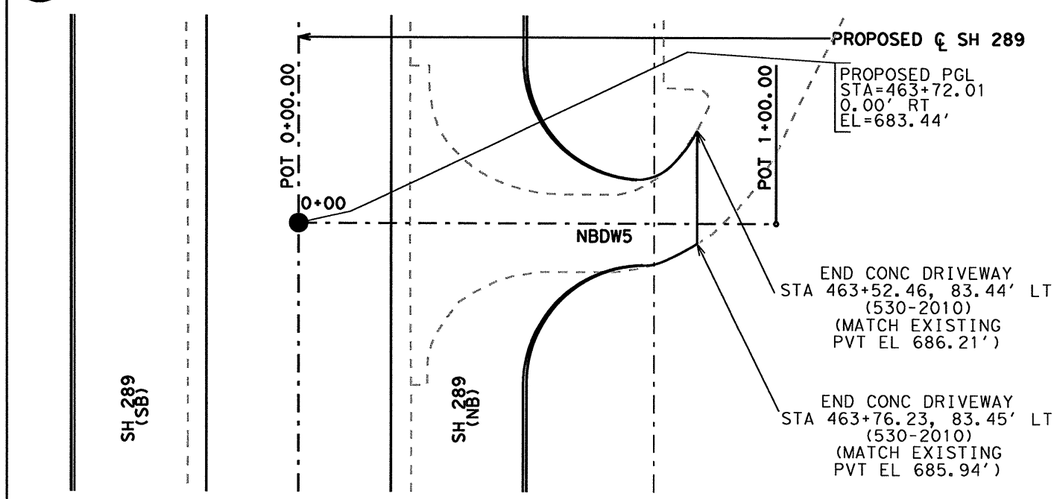

PLAN VIEW

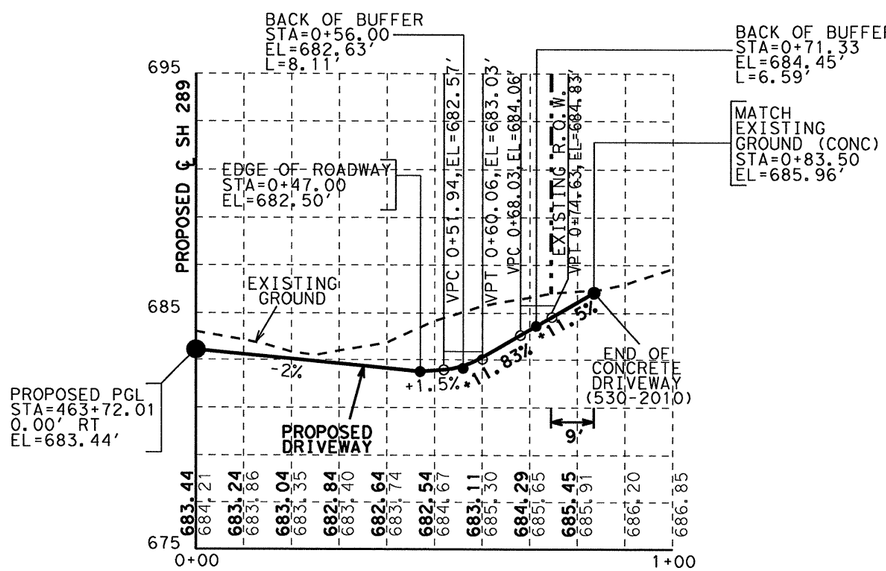

PROFILE

DRIVEWAY 6

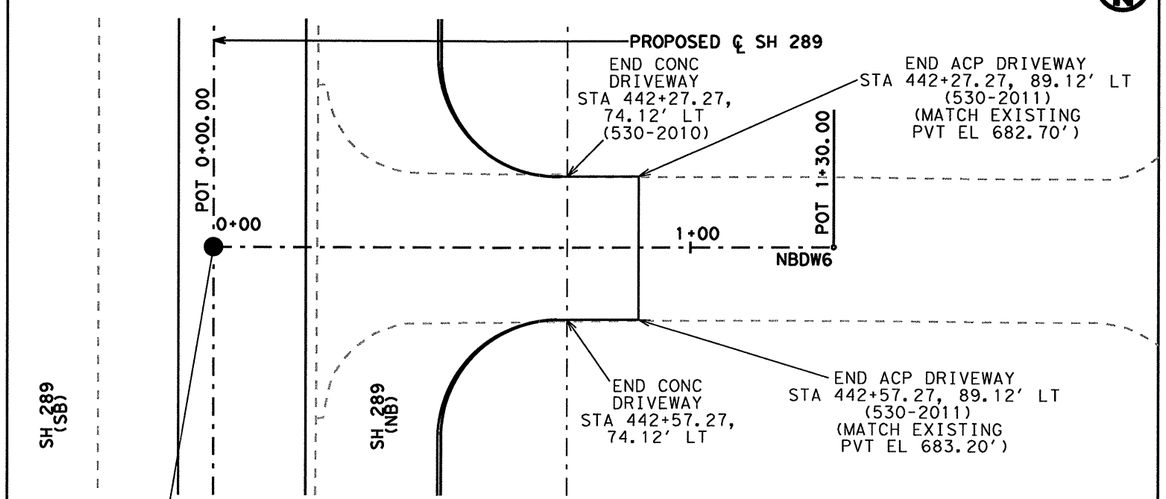

PLAN VIEW

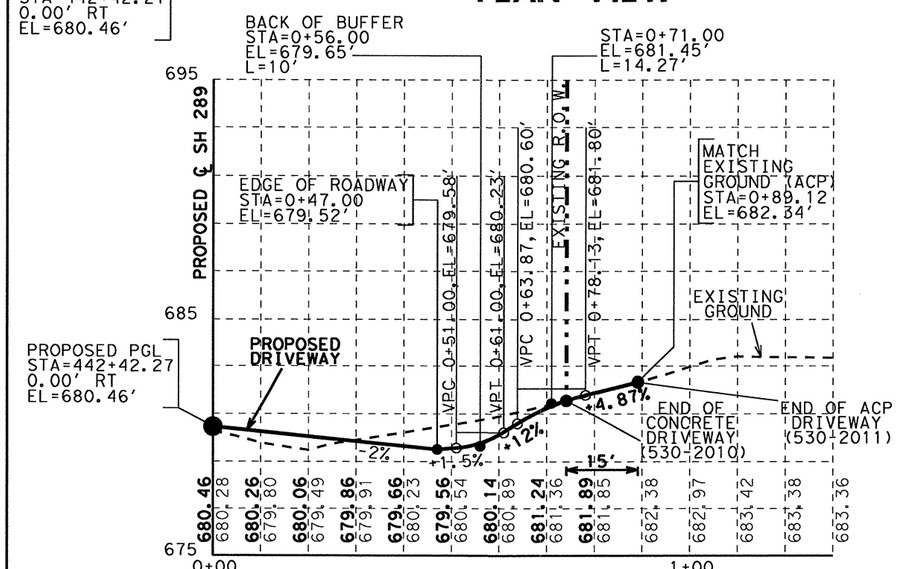

PROFILE

STATE OF TEXAS
NICHOLAS VON SPENCER
93702
LICENSED
PROFESSIONAL ENGINEER

Nicholas V Spencer, P.E. 4-7-11
Signature of Registrant & Date

Texas Department of Transportation
©2011

SH 289 DRIVEWAY 5 & 6 PLAN AND PROFILE

SCALE: HOR 1"=30' & VER 1"= 60' SHEET 3 OF 23

DESIGN	FED. RD. DIV. NO.	STATE PROJECT NO.		HIGHWAY NO.
HJL	6	SEE TITLE SHEET		SH 289
GRAPHICS HJL	STATE	DISTRICT	COUNTY	SHEET NO.
CHECK NVS	TEXAS	DALLAS	COLLIN	177
CHECK	CONTROL	SECTION	JOB	
	0091	04	055	

NOTES:

1. SEE DRIVEWAY DETAILS FOR TIE IN LIMITS.
2. SEE PROJECT LAYOUT WITH ADVANCED WARNING SIGNS FOR DRIVEWAY LOCATION.

R-201104-01

DRIVEWAY 7

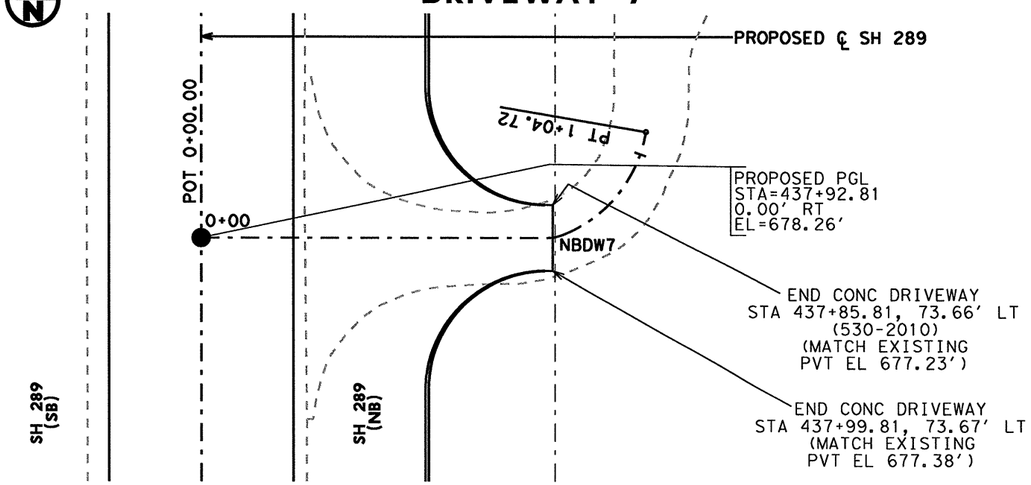

PLAN VIEW

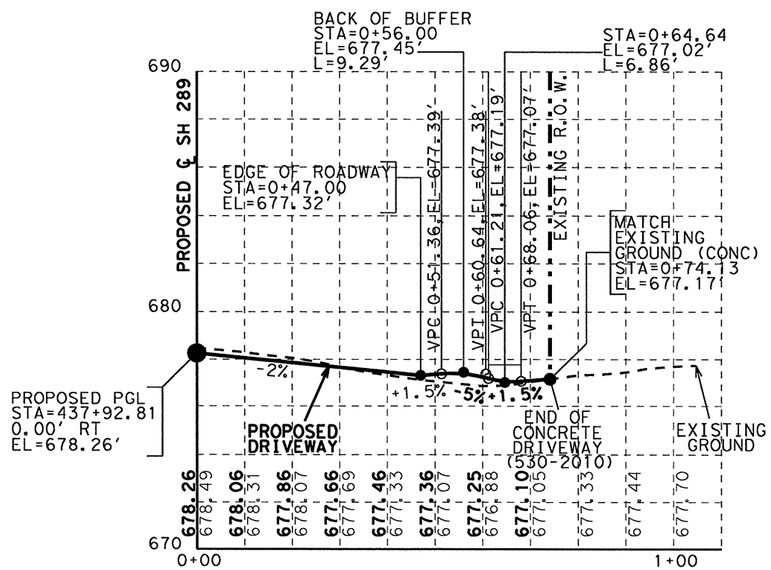

PROFILE

DRIVEWAY 8

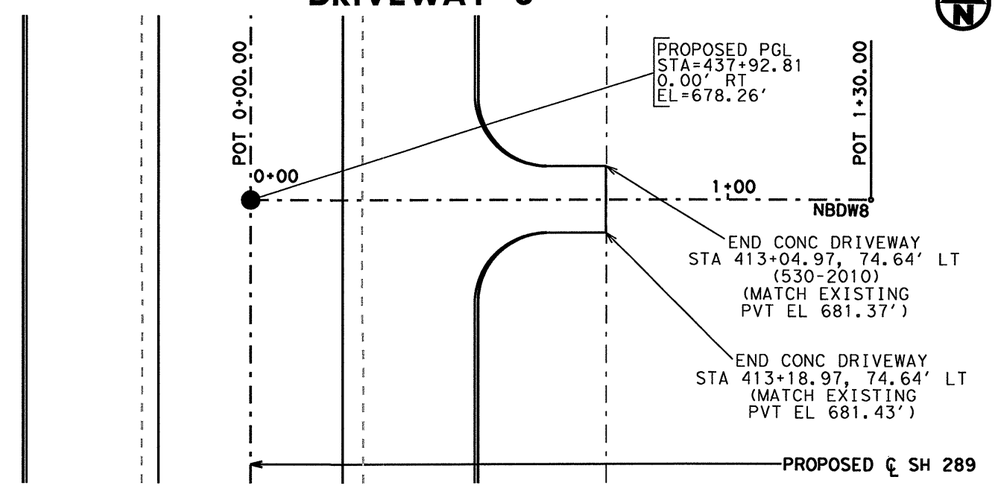

PLAN VIEW

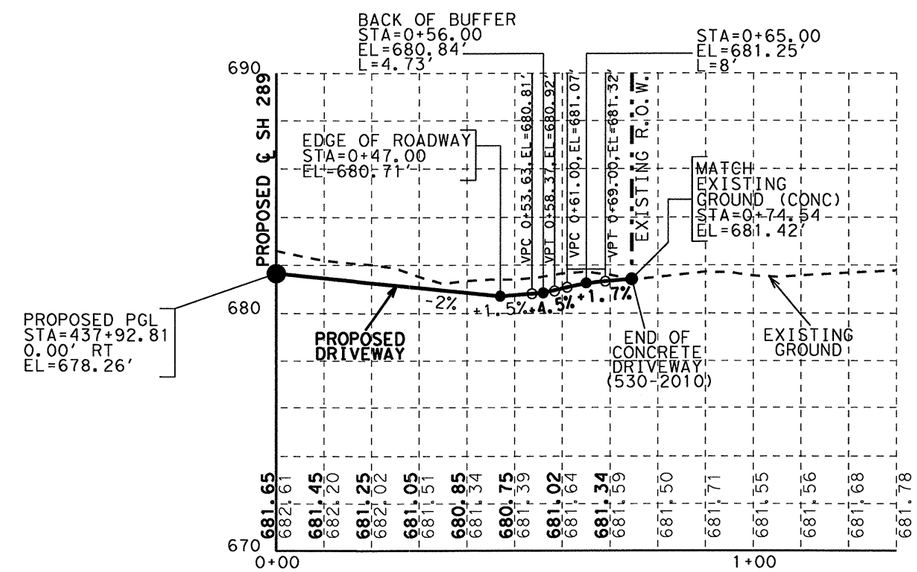

PROFILE

NOTES:

1. SEE DRIVEWAY DETAILS FOR TIE IN LIMITS.
2. SEE PROJECT LAYOUT WITH ADVANCED WARNING SIGNS FOR DRIVEWAY LOCATION.

STATE OF TEXAS
NICHOLAS VON SPENCER
93702
LICENSED
PROFESSIONAL ENGINEER

Nicholas V Spencer, P.E. 4-7-11
Signature of Registrant & Date

Texas Department of Transportation
©2011

SH 289 DRIVEWAY 7 & 8 PLAN AND PROFILE

SCALE: HOR 1"=30' & VER 1"= 60' SHEET 4 OF 23

DESIGN	FED. RD. DIV. NO.	STATE PROJECT NO.		HIGHWAY NO.
HJL	6	SEE TITLE SHEET		SH 289
GRAPHICS HJL	STATE	DISTRICT	COUNTY	SHEET NO.
CHECK NVS	TEXAS	DALLAS	COLLIN	178
CHECK	CONTROL	SECTION	JOB	
	0091	04	055	

R-201104-01

DRIVEWAY 9

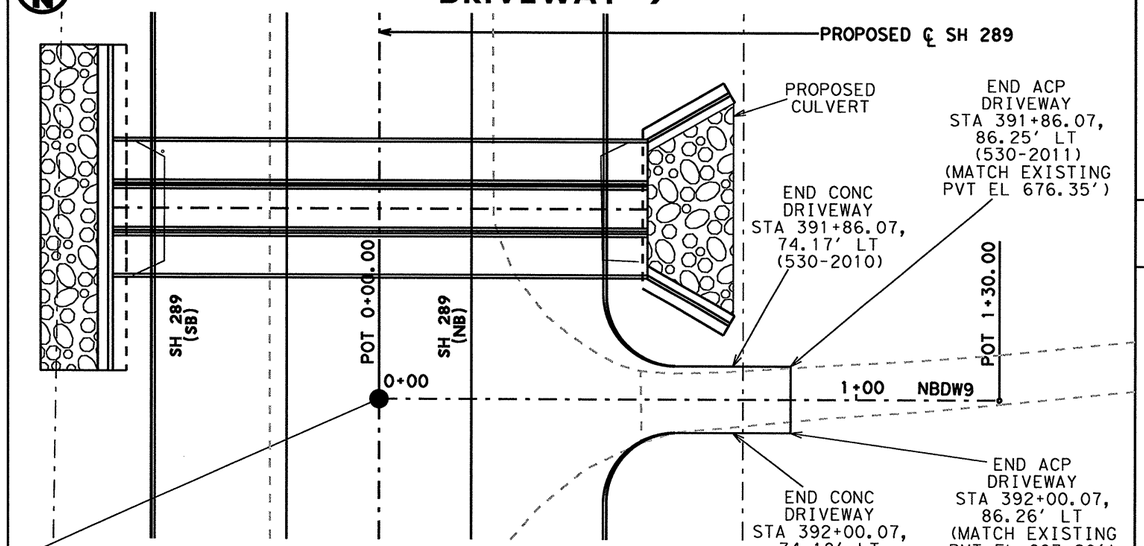

PLAN VIEW

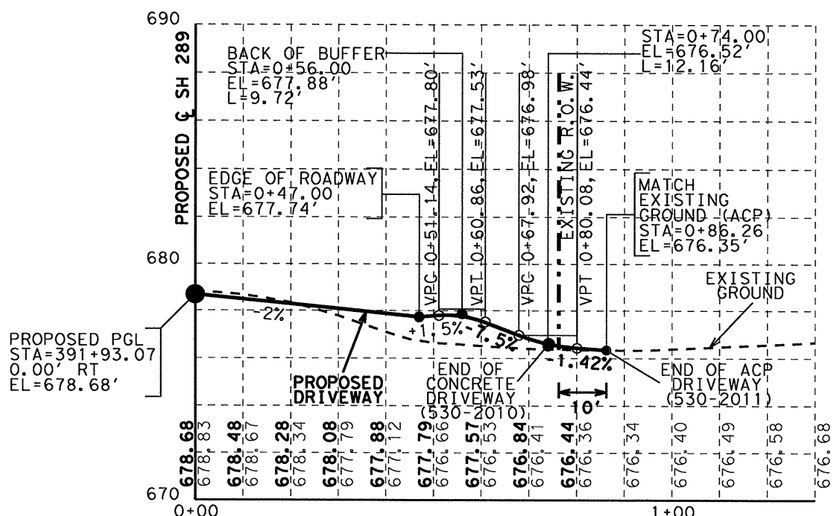

PROFILE

DRIVEWAY 10

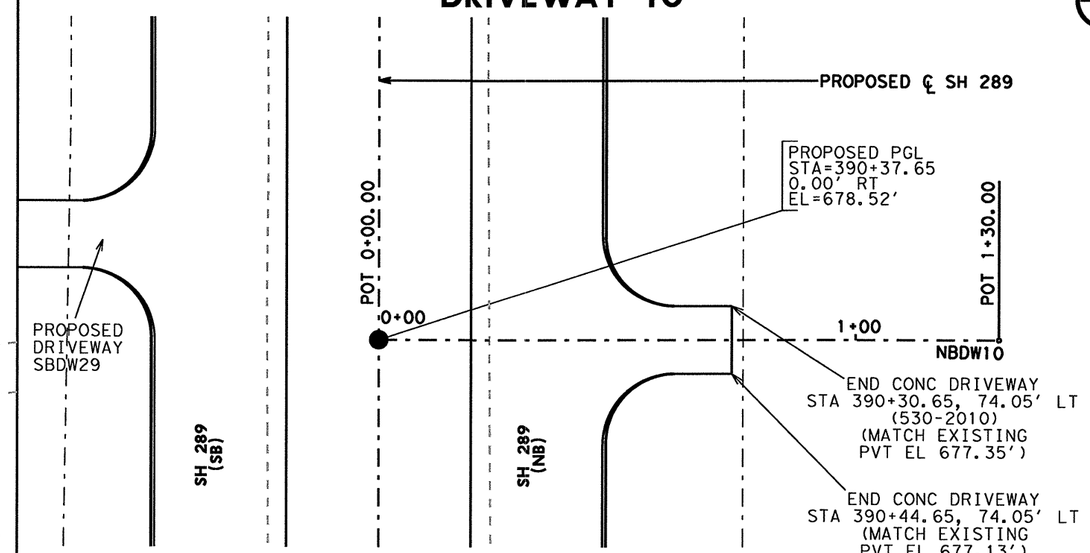

PLAN VIEW

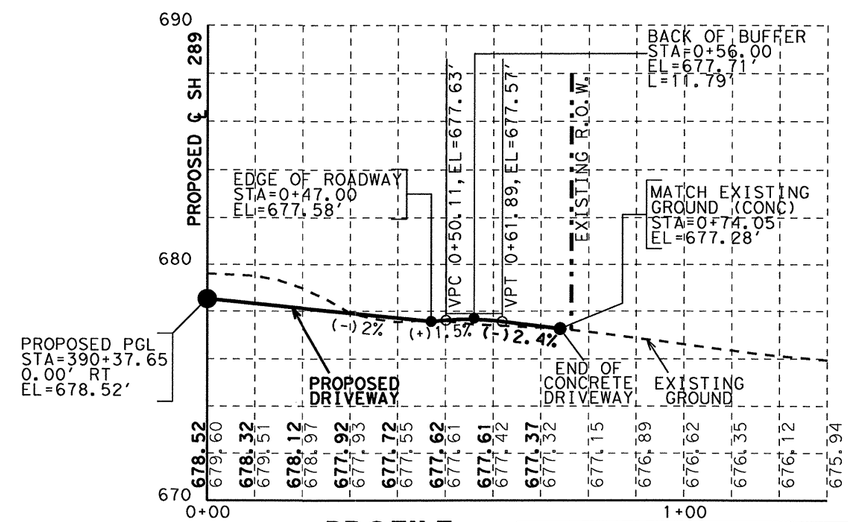

PROFILE

NOTES:

1. SEE DRIVEWAY DETAILS FOR TIE IN LIMITS.
2. SEE PROJECT LAYOUT WITH ADVANCED WARNING SIGNS FOR DRIVEWAY LOCATION.

STATE OF TEXAS
NICHOLAS VON SPENCER
93702
LICENSED PROFESSIONAL ENGINEER

Nicholas V Spencer, P.E. 4-7-11
Signature of Registrant & Date

Texas Department of Transportation
©2011

SH 289 DRIVEWAY 9 & 10 PLAN AND PROFILE

SCALE: HOR 1"=30' & VER 1"= 60' SHEET 5 OF 23

DESIGN	FED. RD. DIV. NO.	STATE PROJECT NO.		HIGHWAY NO.
HJL	6	SEE TITLE SHEET		SH 289
GRAPHICS HJL	STATE	DISTRICT	COUNTY	SHEET NO.
CHECK NVS	TEXAS	DALLAS	COLLIN	179
CHECK	CONTROL	SECTION	JOB	
	0091	04	055	

R-201104-01

DRIVEWAY 11

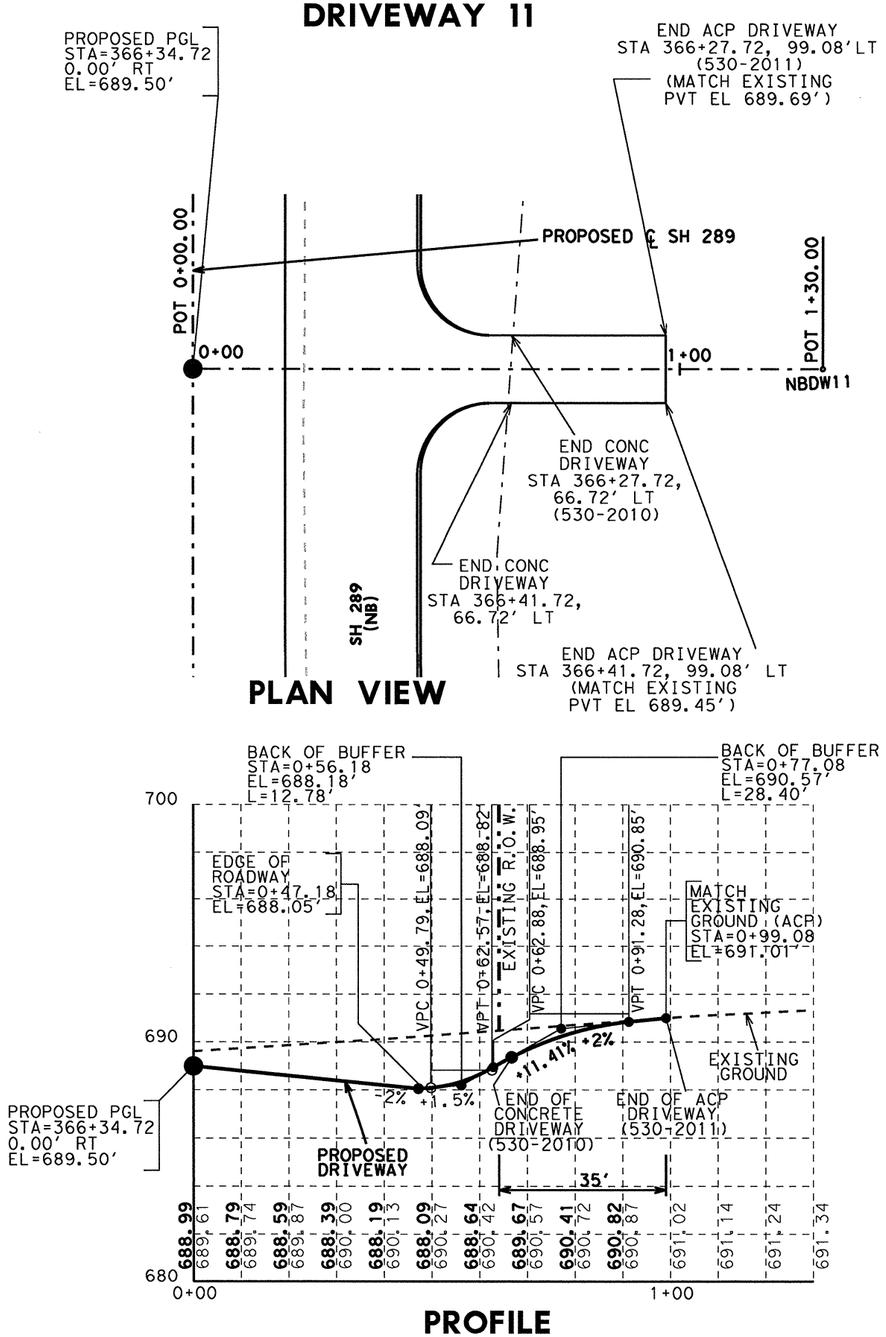

PROFILE

NOTES:

1. SEE DRIVEWAY DETAILS FOR TIE IN LIMITS.
2. SEE PROJECT LAYOUT WITH ADVANCED WARNING SIGNS FOR DRIVEWAY LOCATION.

DRIVEWAY 17A

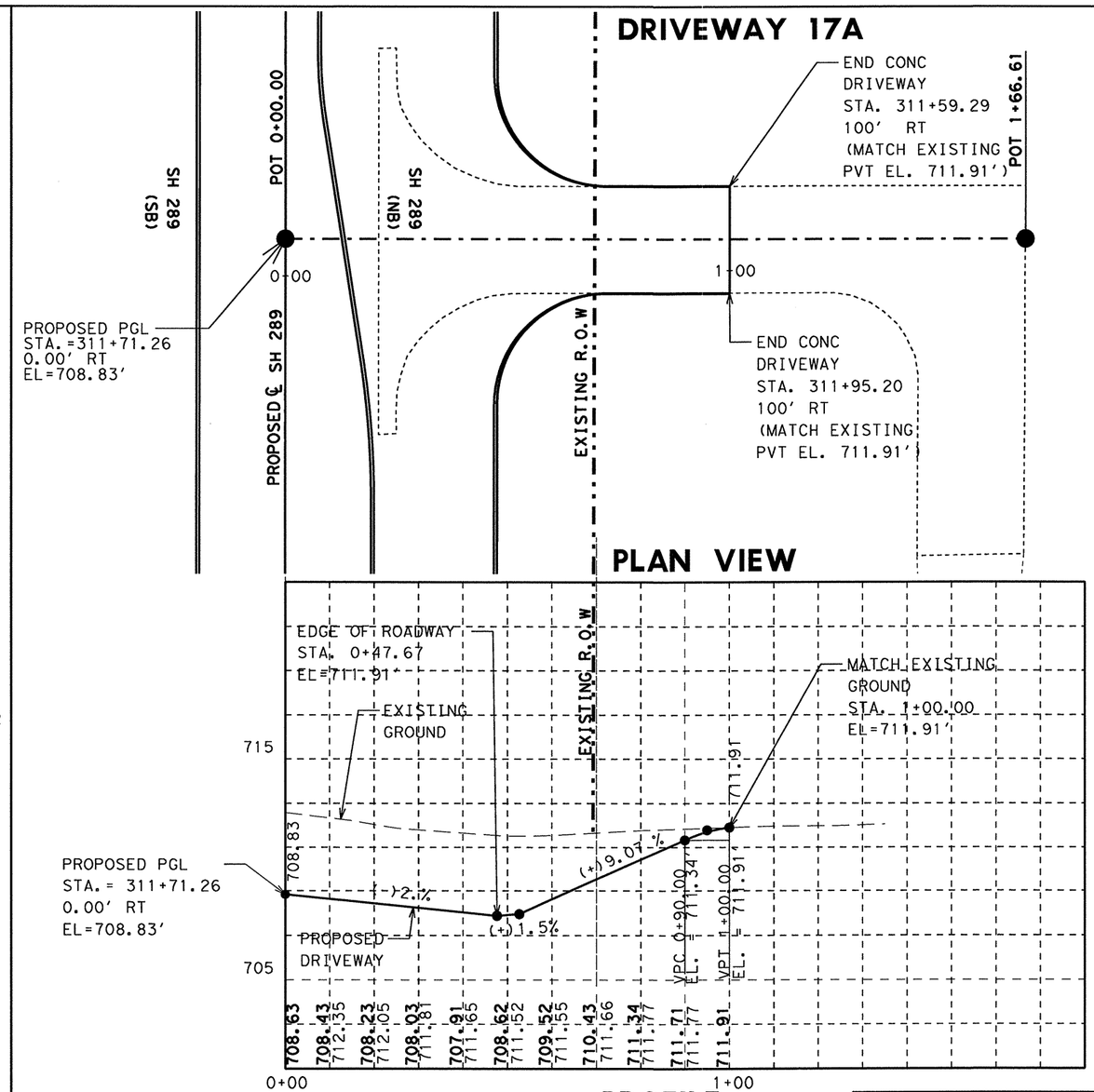

PROFILE

STATE OF TEXAS
NICHOLAS VON SPENCER
93702
LICENSED
PROFESSIONAL ENGINEER

Signature of Registrant & Date, P.E. 5-25-11

Texas Department of Transportation
©2011

SH 289 DRIVEWAY 11 & 17A PLAN AND PROFILE

SCALE: HOR 1"=30' & VER 1"= 60' SHEET 6 OF 23

DESIGN	FED. RD. DIV. NO.	STATE PROJECT NO.		HIGHWAY NO.
HJL/GG	6	SEE TITLE SHEET		SH 289
GRAPHICS HJL/GG	STATE	DISTRICT	COUNTY	SHEET NO.
CHECK NVS	TEXAS	DALLAS	COLLIN	180
CHECK	CONTROL	SECTION	JOB	
	0091	04	055	

R-201104-01

DRIVEWAY 12

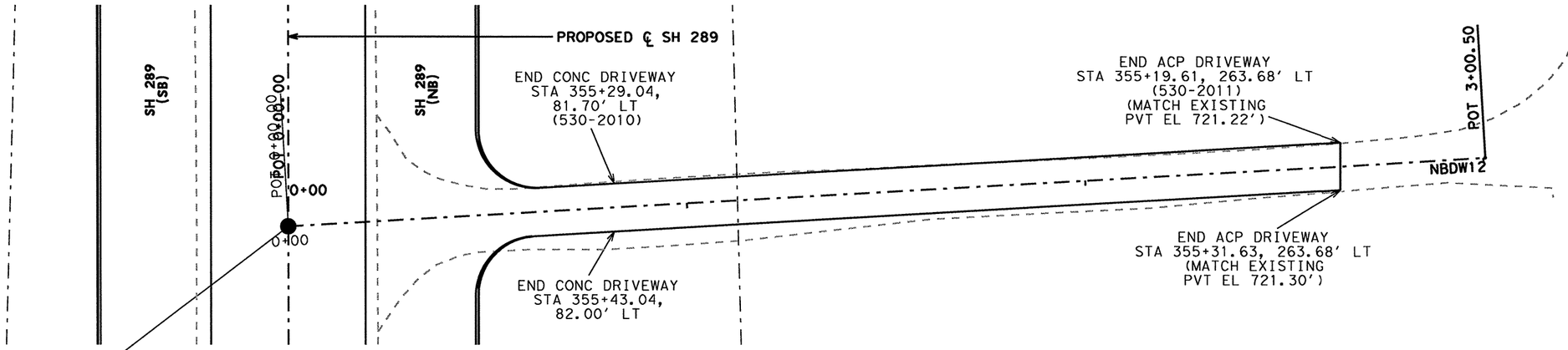

PLAN VIEW

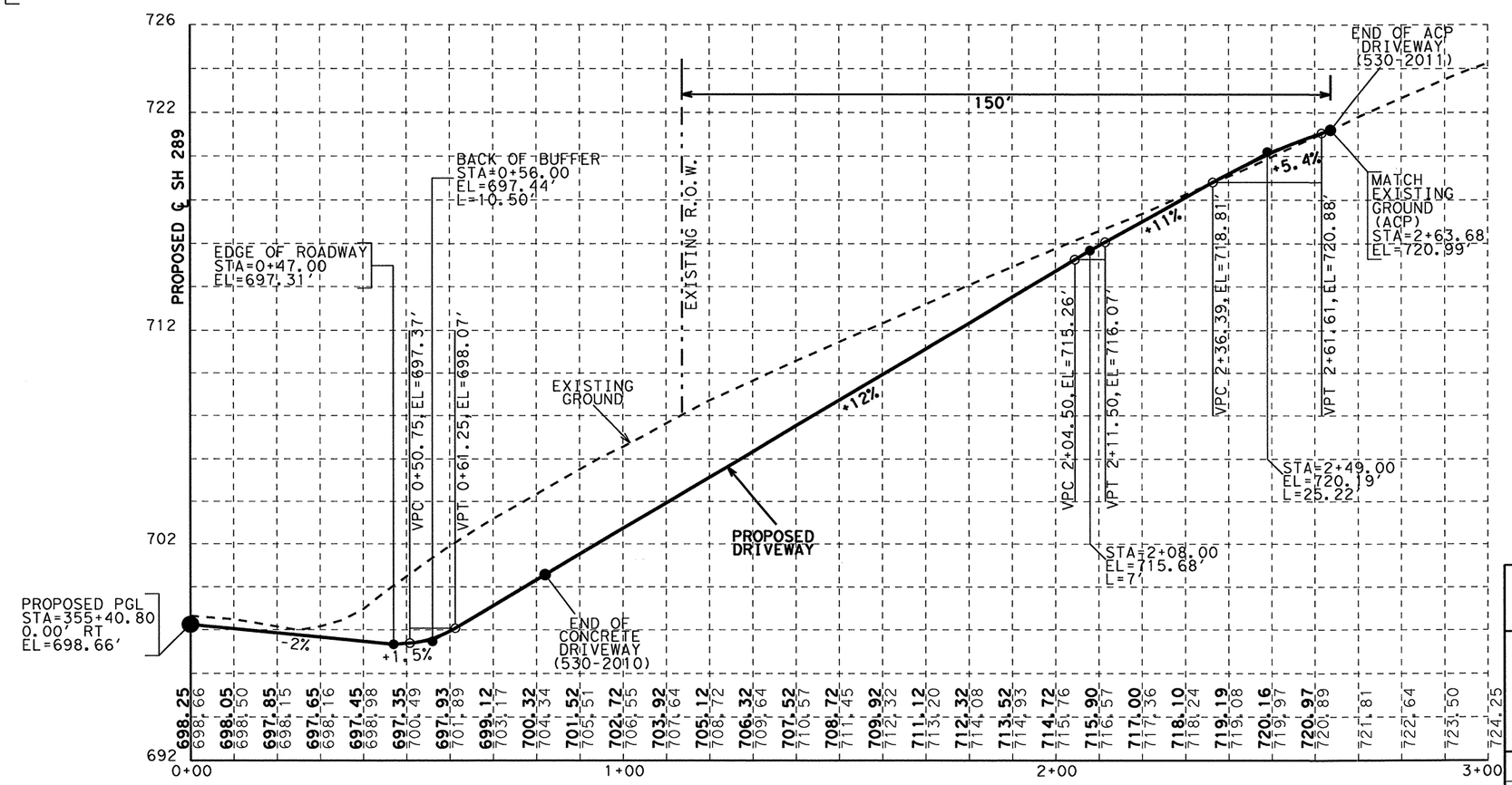

PROFILE

NOTES:

1. SEE DRIVEWAY DETAILS FOR TIE IN LIMITS.
2. SEE PROJECT LAYOUT WITH ADVANCED WARNING SIGNS FOR DRIVEWAY LOCATION.

STATE OF TEXAS
NICHOLAS VON SPENCER
93702
LICENSED PROFESSIONAL ENGINEER

Nicholas Von Spencer, P.E. 4-7-11
Signature of Registrant & Date

Texas Department of Transportation
©2011

SH 289 DRIVEWAY 12 PLAN AND PROFILE

SCALE: HOR 1"=30' & VER 1"= 60' SHEET 7 OF 23

DESIGN HJL	FED. RD. DIV. NO.	STATE PROJECT NO.		HIGHWAY NO.
GRAPHICS HJL	6	SEE TITLE SHEET		SH 289
	STATE	DISTRICT	COUNTY	SHEET NO.
CHECK NVS	TEXAS	DALLAS	COLLIN	181
CHECK	CONTROL	SECTION	JOB	
	0091	04	055	

R-201104-01

DRIVEWAY 13

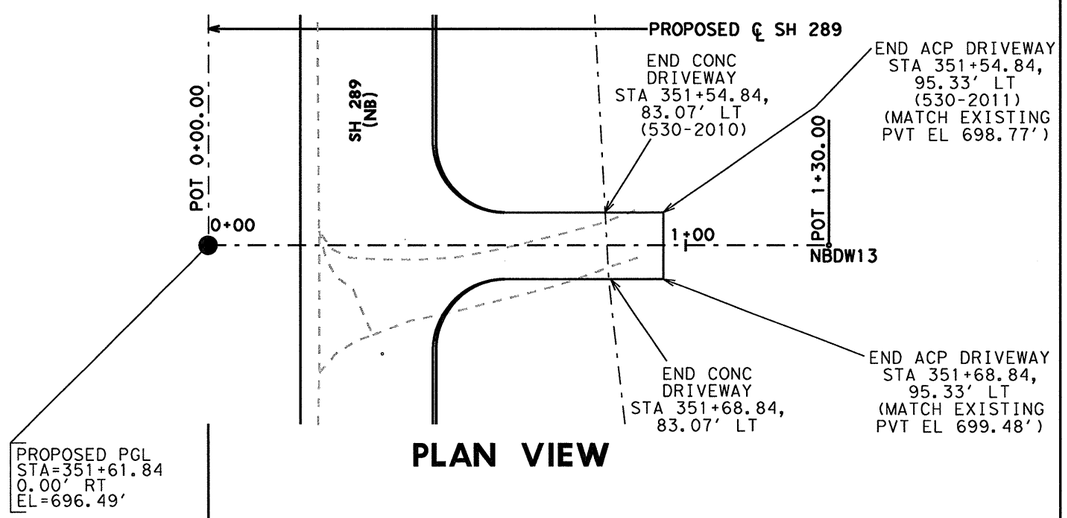

PLAN VIEW

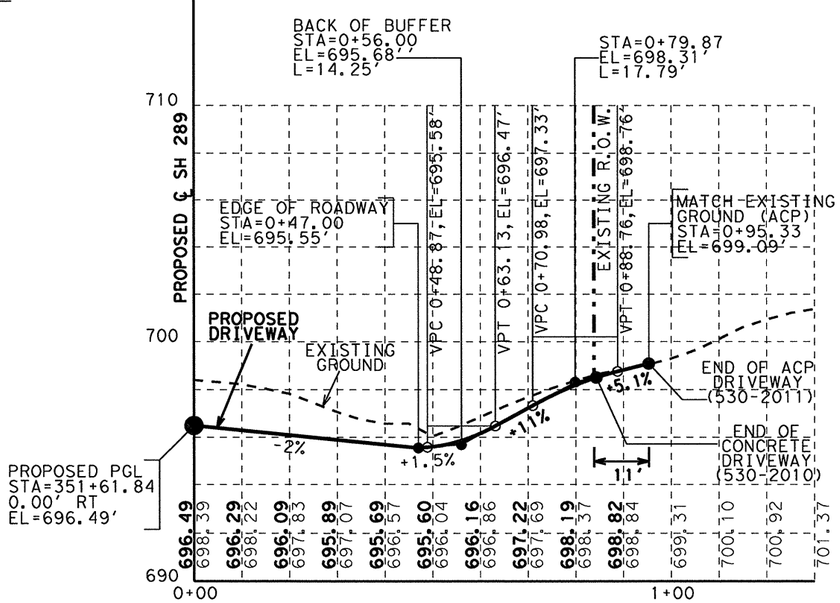

PROFILE

NOTES:

1. SEE DRIVEWAY DETAILS FOR TIE IN LIMITS.
2. SEE PROJECT LAYOUT WITH ADVANCED WARNING SIGNS FOR DRIVEWAY LOCATION.

DRIVEWAY 16A

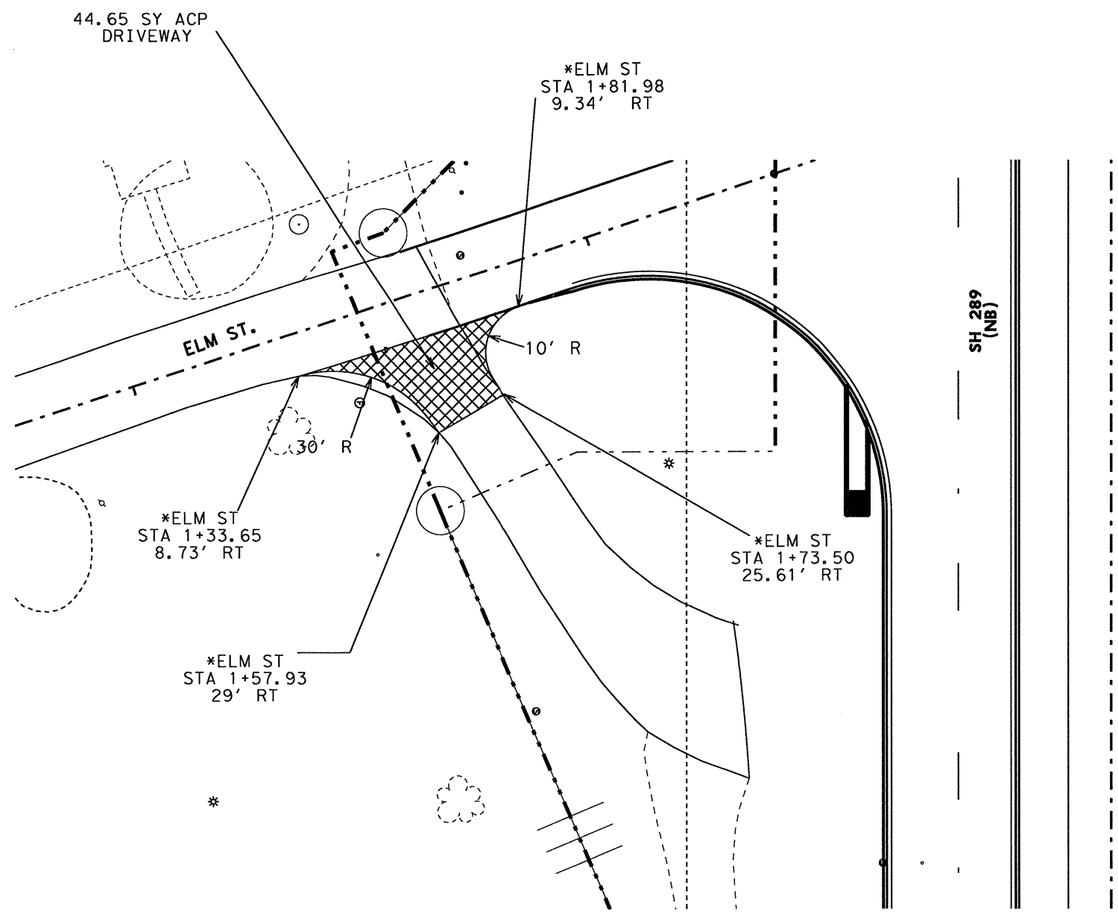

PLAN VIEW

* ALSO SEE SH 289 AT ELM ST. PLAN & PROFILE

STATE OF TEXAS
NICHOLAS VON SPENCER
93702
LICENSED PROFESSIONAL ENGINEER

Signature of Registrant & P.E. Date 5-26-11

Texas Department of Transportation ©2011

SH 289 DRIVEWAY 13 &16A PLAN AND PROFILE

SCALE: HOR 1"=30' & VER 1"= 60' SHEET 8 OF 23

DESIGN HJL/GG	FED.RD. DIV.NO.	STATE PROJECT NO.		HIGHWAY NO.
GRAPHICS HJL/GG	6	SEE TITLE SHEET		SH 289
	STATE	DISTRICT	COUNTY	SHEET NO.
CHECK NVS	TEXAS	DALLAS	COLLIN	182
CHECK	CONTROL	SECTION	JOB	
	0091	04	055	

R-201104-01

DRIVEWAY 14

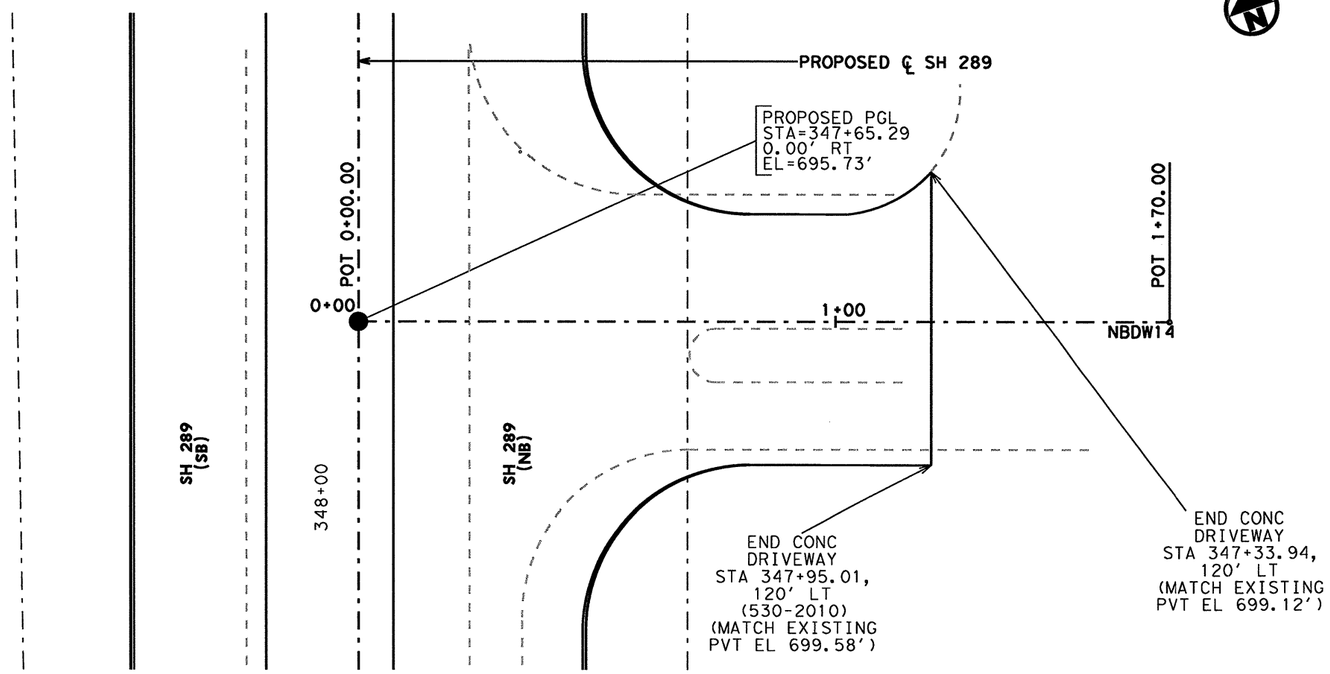

PLAN VIEW

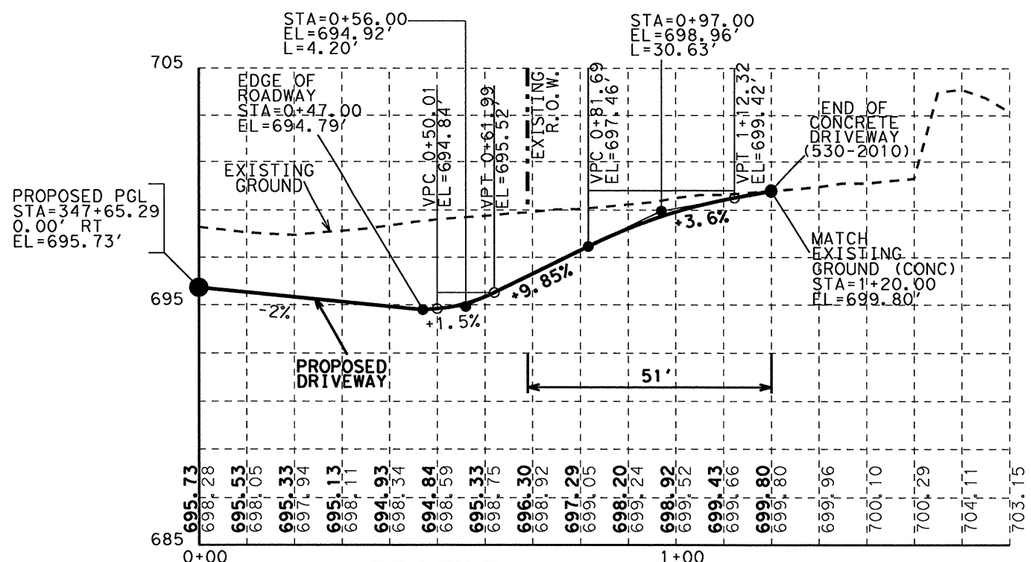

PROFILE

NOTES:

1. SEE DRIVEWAY DETAILS FOR TIE IN LIMITS.
2. SEE PROJECT LAYOUT WITH ADVANCED WARNING SIGNS FOR DRIVEWAY LOCATION.

STATE OF TEXAS
NICHOLAS VON SPENCER
93702
LICENSED
PROFESSIONAL ENGINEER

Signature of Registrant & Date, P.E. 4-7-11

Texas Department of Transportation
©2011

SH 289
DRIVEWAY 14
PLAN AND PROFILE

SCALE: HOR 1"=30' & VER 1"= 60' SHEET 9 OF 23

DESIGN HJL	FED. RD. DIV. NO.	STATE PROJECT NO.		HIGHWAY NO.
GRAPHICS HJL	6	SEE TITLE SHEET		SH 289
	STATE	DISTRICT	COUNTY	SHEET NO.
CHECK NVS	TEXAS	DALLAS	COLLIN	183
CHECK	CONTROL	SECTION	JOB	
	0091	04	055	

R-201104-01

DRIVEWAY 15

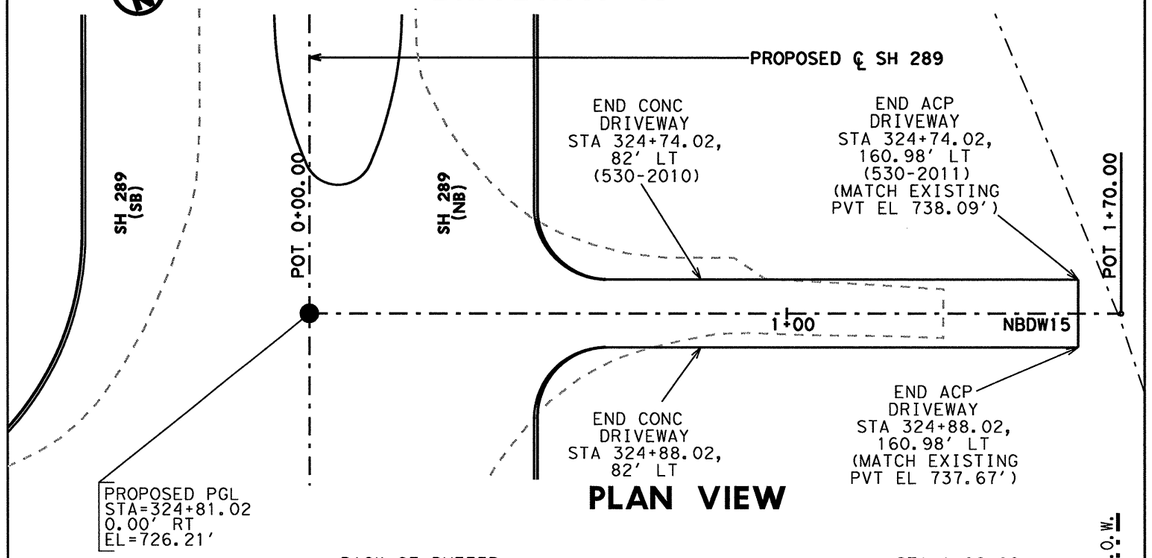

PLAN VIEW

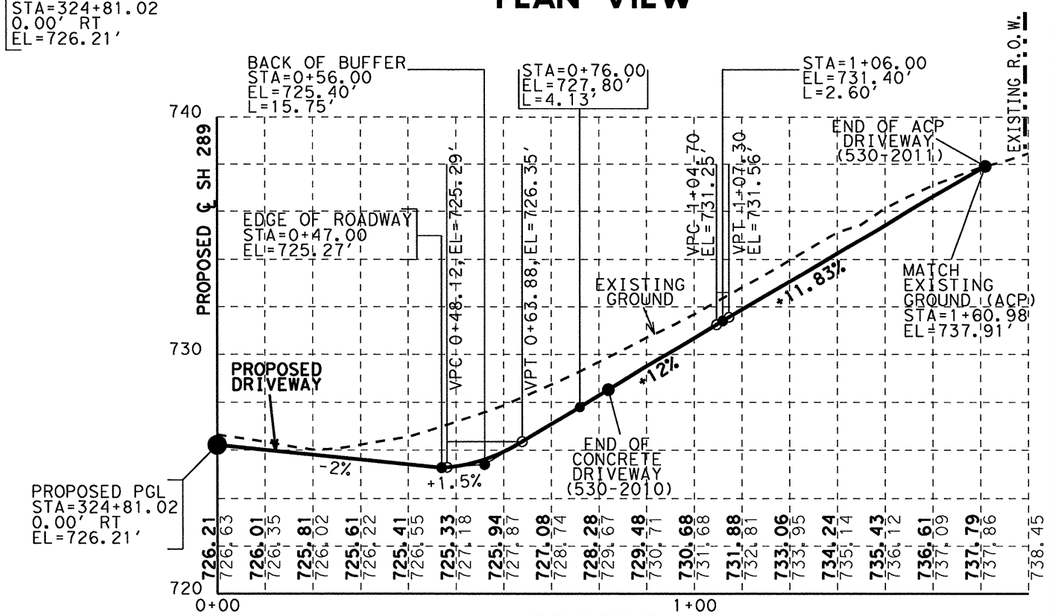

PROFILE

DRIVEWAY 16

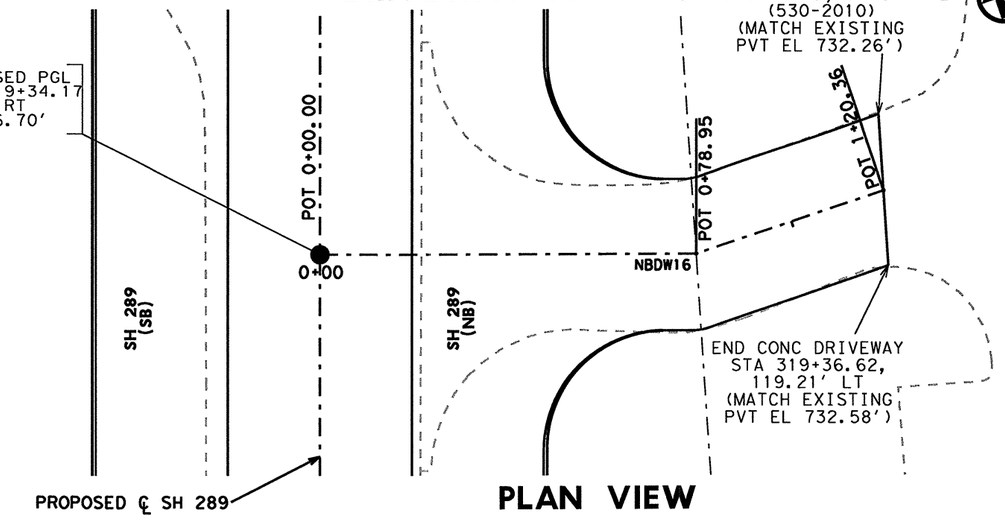

PLAN VIEW

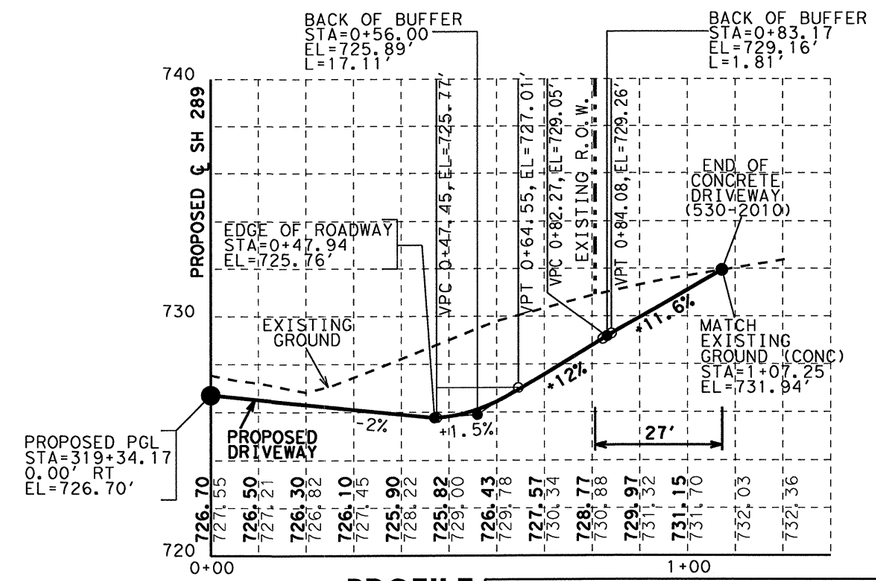

PROFILE

NOTES:

1. SEE DRIVEWAY DETAILS FOR TIE IN LIMITS.
2. SEE PROJECT LAYOUT WITH ADVANCED WARNING SIGNS FOR DRIVEWAY LOCATION.

STATE OF TEXAS
NICHOLAS VON SPENCER
93702
LICENSED PROFESSIONAL ENGINEER

Nicholas V Spencer, P.E. 4-7-11
Signature of Registrant & Date

Texas Department of Transportation
©2011

SH 289 DRIVEWAY 15 & 16 PLAN AND PROFILE

SCALE: HOR 1"=30' & VER 1"= 60' SHEET 10 OF 23

DESIGN	FED.RD. DIV.NO.	STATE PROJECT NO.			HIGHWAY NO.
HJL	6	SEE TITLE SHEET			SH 289
GRAPHICS HJL	STATE	DISTRICT	COUNTY		SHEET NO.
CHECK NVS	TEXAS	DALLAS	COLLIN		184
CHECK	CONTROL	SECTION	JOB		
	0091	04	055		

R-201104-01

DRIVEWAY 17

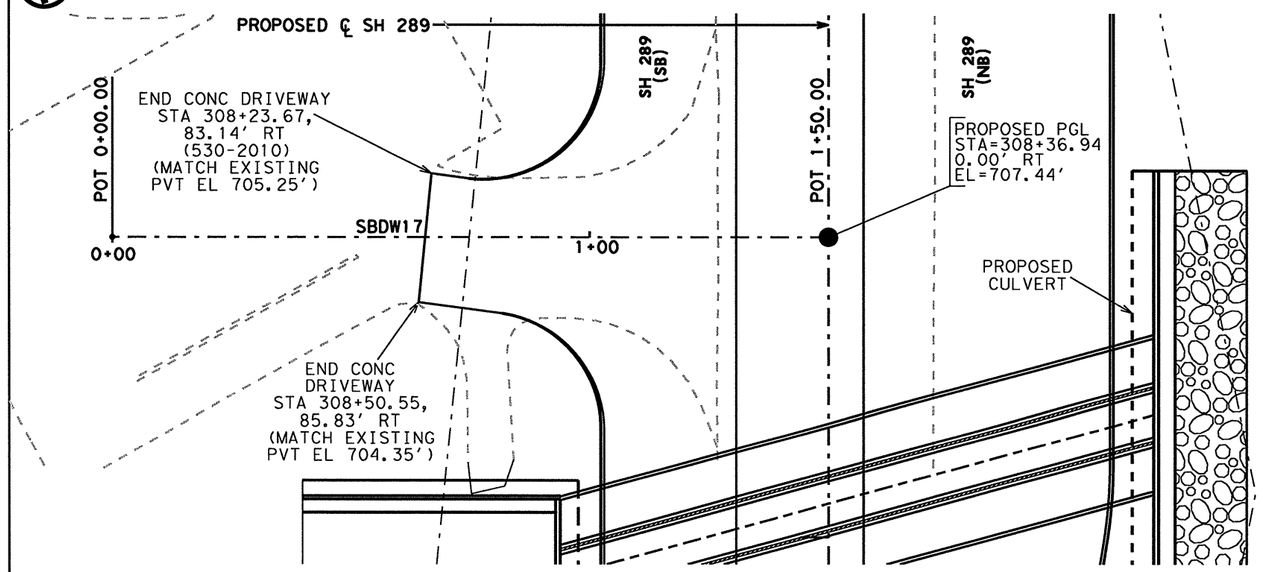

PLAN VIEW

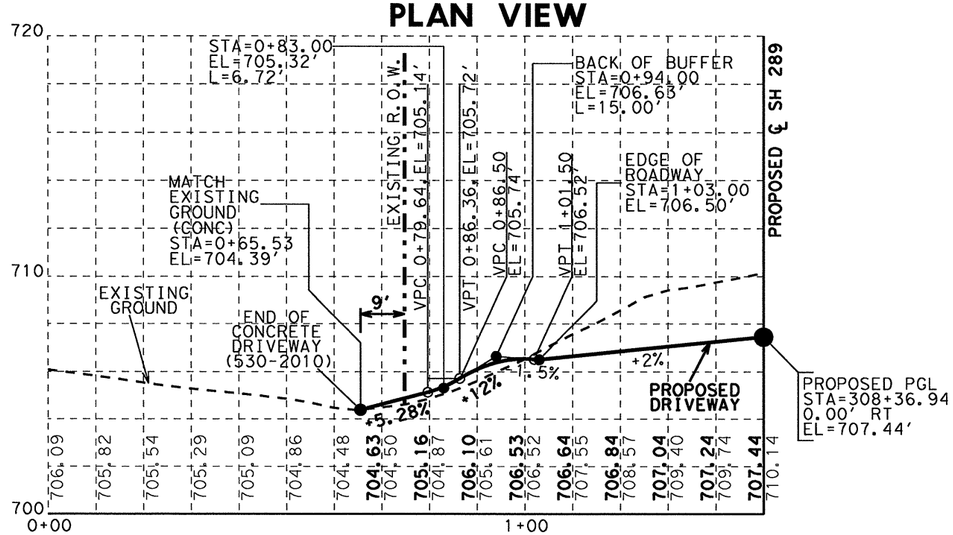

PROFILE

DRIVEWAY 18

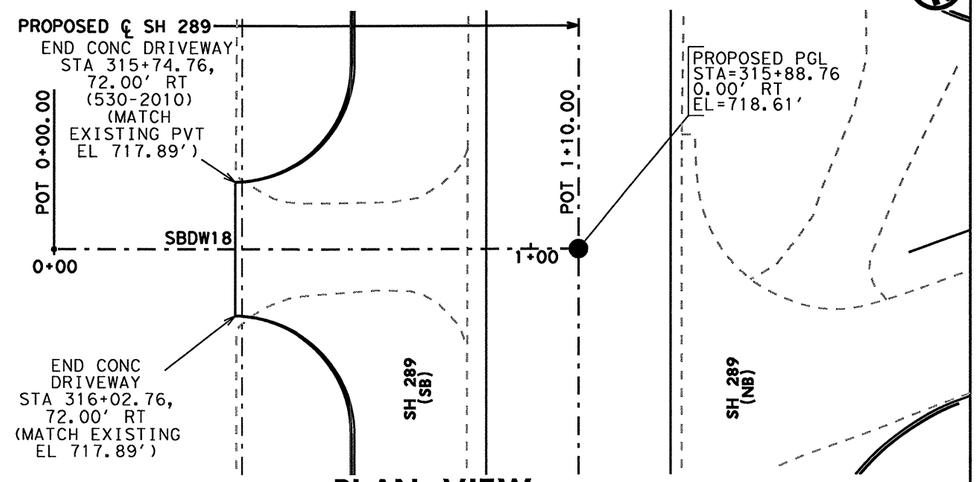

PLAN VIEW

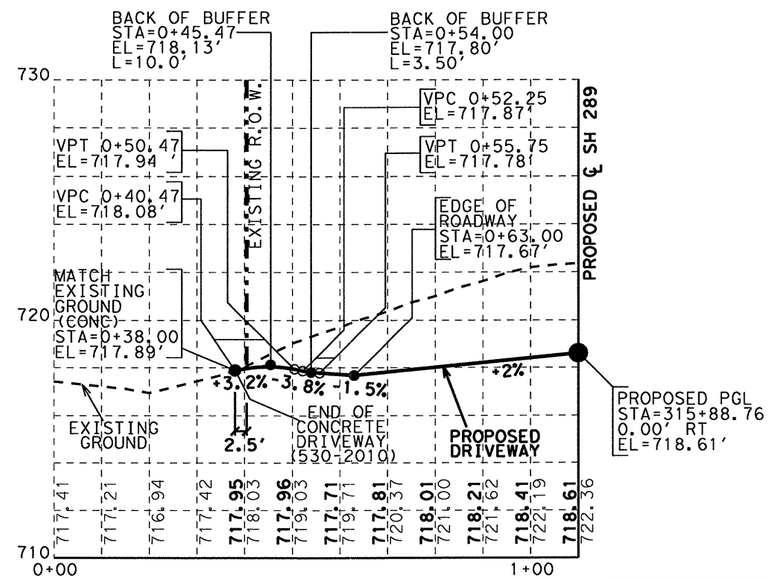

PROFILE

NOTES:

1. SEE DRIVEWAY DETAILS FOR TIE IN LIMITS.
2. SEE PROJECT LAYOUT WITH ADVANCED WARNING SIGNS FOR DRIVEWAY LOCATION.

STATE OF TEXAS
NICHOLAS VON SPENCER
93702
LICENSED
PROFESSIONAL ENGINEER

Nicholas V Spencer, P.E. 4-7-11
Signature of Registrant & Date

Texas Department of Transportation
©2011

SH 289 DRIVEWAY 17 & 18 PLAN AND PROFILE

SCALE: HOR 1"=30' & VER 1"= 60' SHEET 11 OF 23

DESIGN	FED. RD. DIV. NO.	STATE PROJECT NO.		HIGHWAY NO.
HJL	6	SEE TITLE SHEET		SH 289
GRAPHICS HJL	STATE	DISTRICT	COUNTY	SHEET NO.
CHECK NVS	TEXAS	DALLAS	COLLIN	185
CHECK	CONTROL	SECTION	JOB	
	0091	04	055	

R-201104-01

DRIVEWAY 19

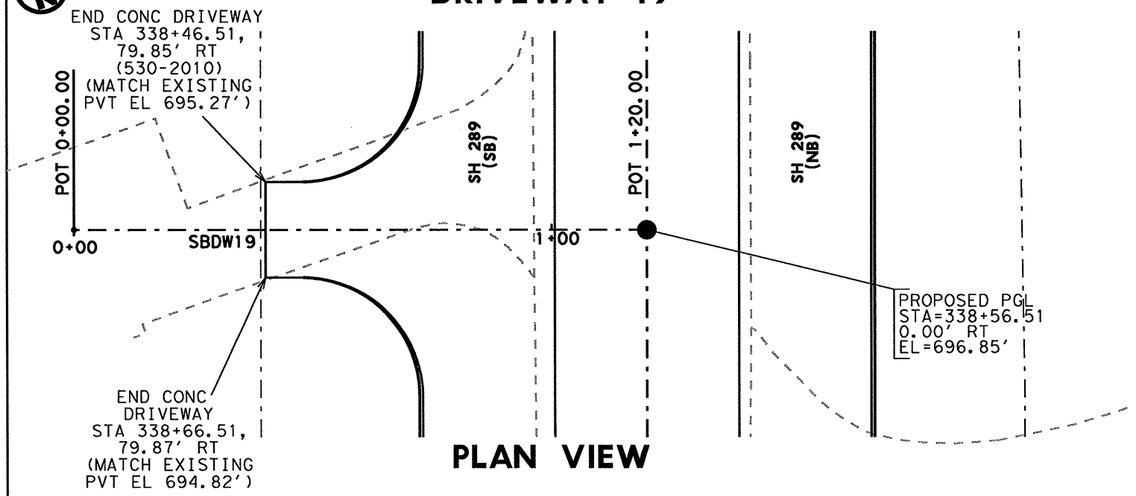

PLAN VIEW

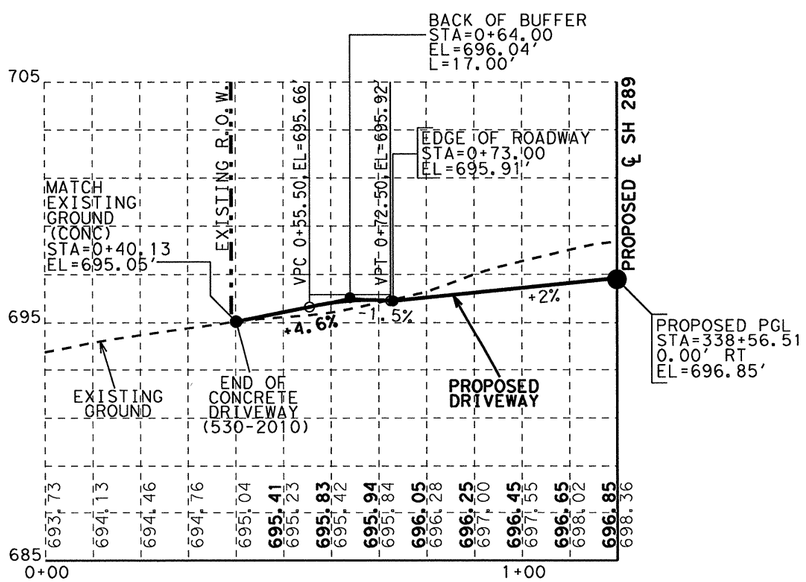

PROFILE

NOTES:

1. SEE DRIVEWAY DETAILS FOR TIE IN LIMITS.
2. SEE PROJECT LAYOUT WITH ADVANCED WARNING SIGNS FOR DRIVEWAY LOCATION.

DRIVEWAY 20

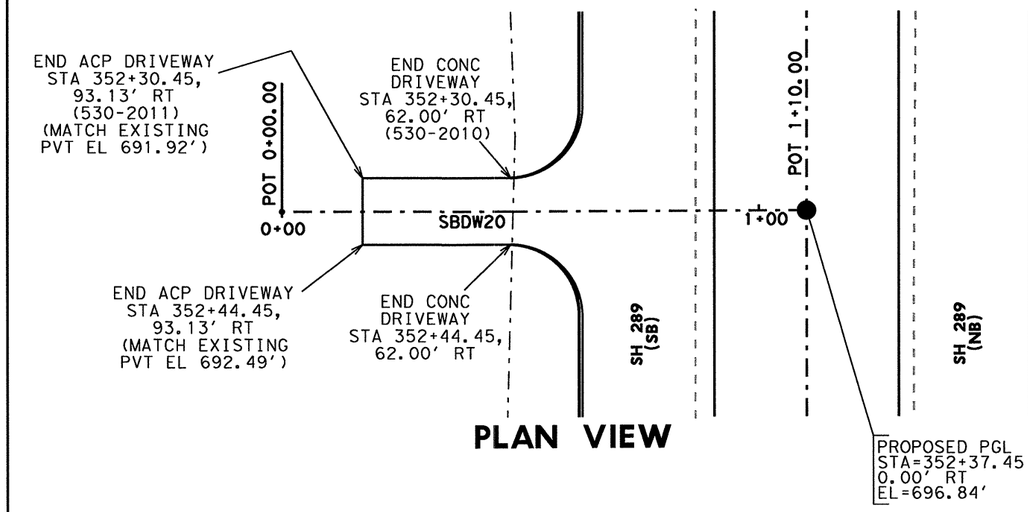

PLAN VIEW

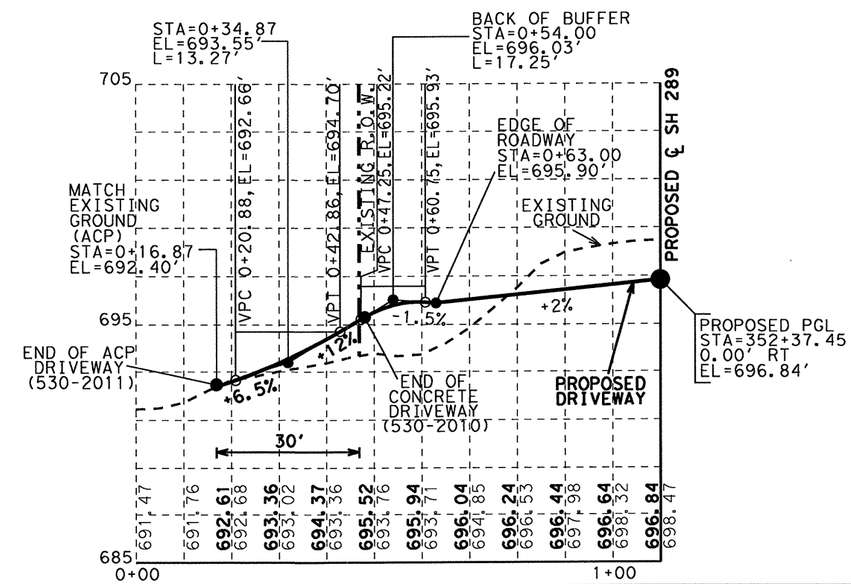

PROFILE

STATE OF TEXAS
NICHOLAS VON SPENCER
93702
LICENSED
PROFESSIONAL ENGINEER

Nicholas V Spencer, P.E. 4-7-11
Signature of Registrant & Date

Texas Department of Transportation
©2011

SH 289 DRIVEWAY 19 & 20 PLAN AND PROFILE

SCALE: HOR 1"=30' & VER 1"= 60' SHEET 12 OF 23

DESIGN	FED. RD. DIV. NO.	STATE PROJECT NO.		HIGHWAY NO.
HJL	6	SEE TITLE SHEET		SH 289
GRAPHICS HJL	STATE	DISTRICT	COUNTY	SHEET NO.
CHECK NVS	TEXAS	DALLAS	COLLIN	186
CHECK	CONTROL	SECTION	JOB	
	0091	04	055	

R-201104-01

DRIVEWAY 21

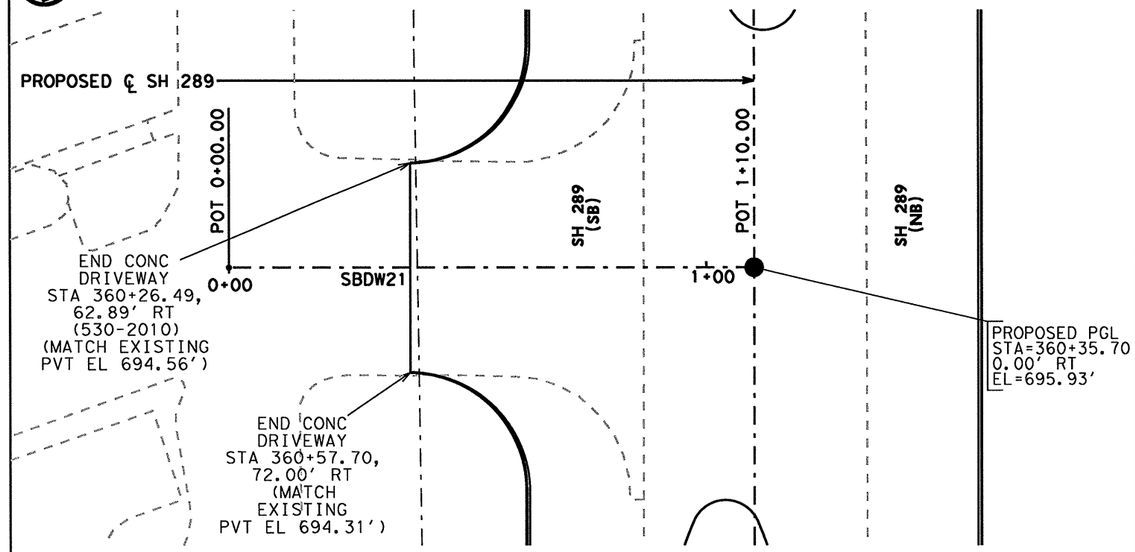

PLAN VIEW

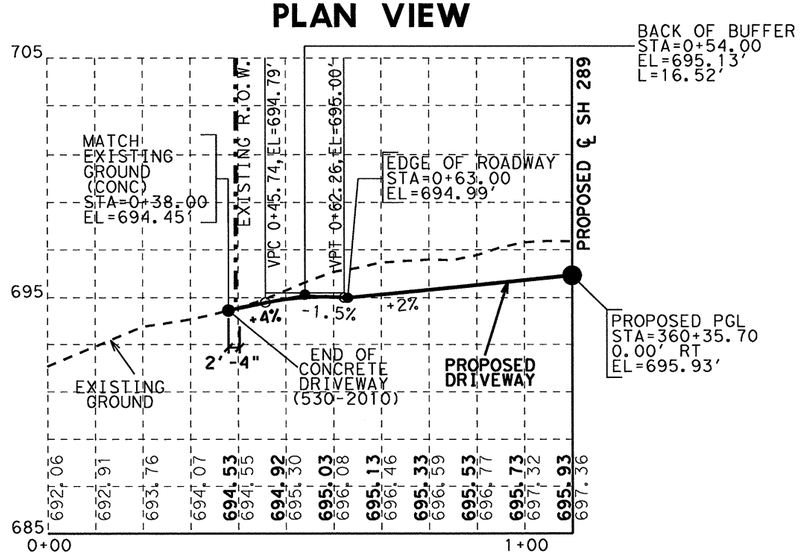

PROFILE

NOTES:

1. SEE DRIVEWAY DETAILS FOR TIE IN LIMITS.
2. SEE PROJECT LAYOUT WITH ADVANCED WARNING SIGNS FOR DRIVEWAY LOCATION.

DRIVEWAY 22

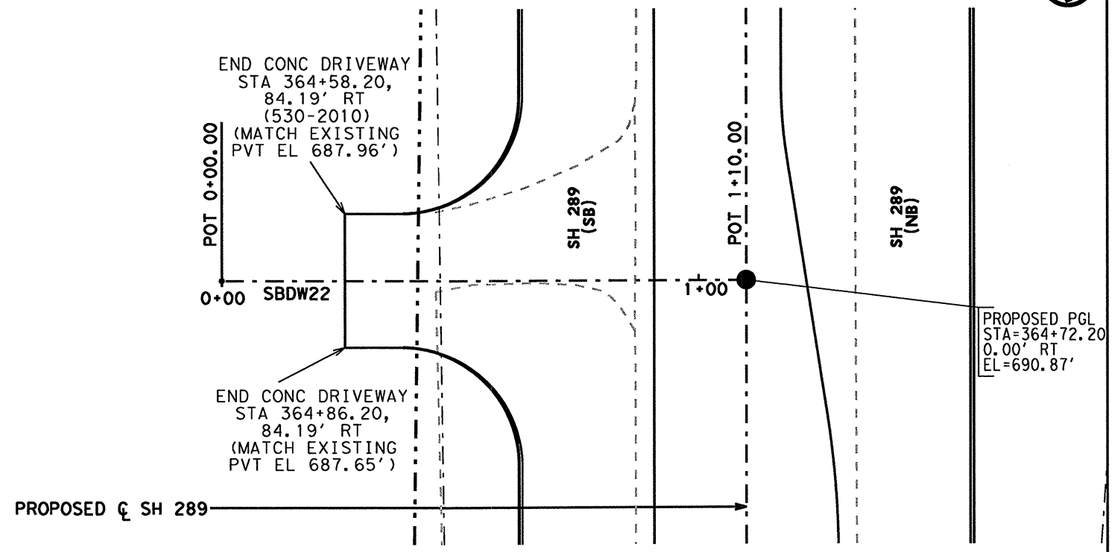

PLAN VIEW

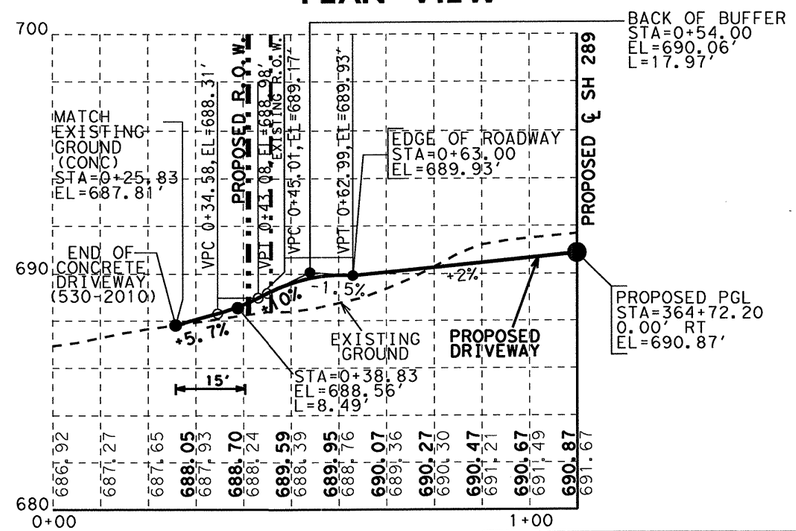

PROFILE

STATE OF TEXAS
NICHOLAS VON SPENCER
93702
LICENSED PROFESSIONAL ENGINEER

Nicholas V Spencer, P.E. 4-7-11
Signature of Registrant & Date

Texas Department of Transportation
©2011

SH 289 DRIVEWAY 21 & 22 PLAN AND PROFILE

SCALE: HOR 1"=30' & VER 1"= 60' SHEET 13 OF 23

DESIGN	FED. RD. DIV. NO.	STATE PROJECT NO.		HIGHWAY NO.
HJL	6	SEE TITLE SHEET		SH 289
GRAPHICS HJL	STATE	DISTRICT	COUNTY	SHEET NO.
CHECK NVS	TEXAS	DALLAS	COLLIN	187
CHECK	CONTROL	SECTION	JOB	
	0091	04	055	

R-201104-01

DRIVEWAY 23

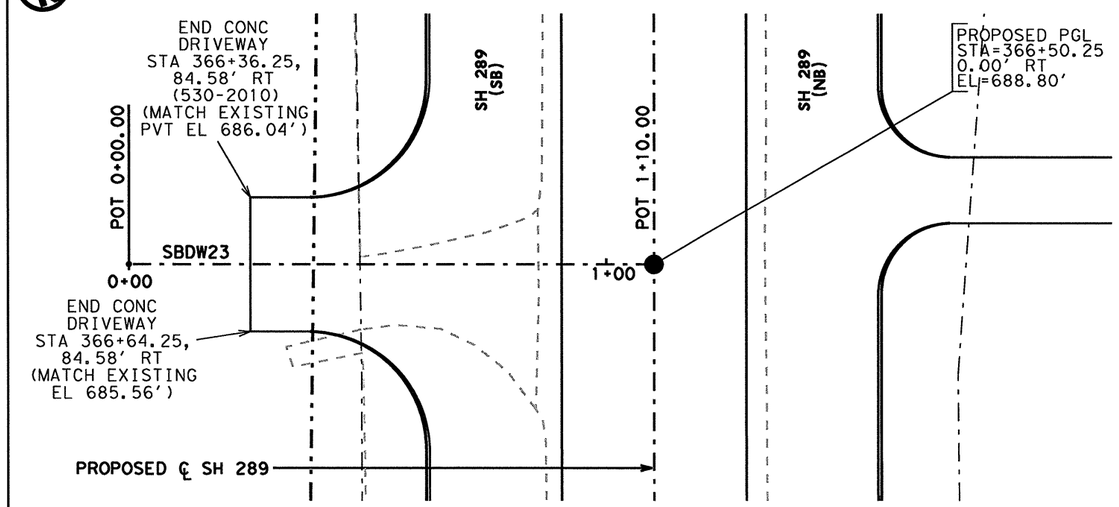

PLAN VIEW

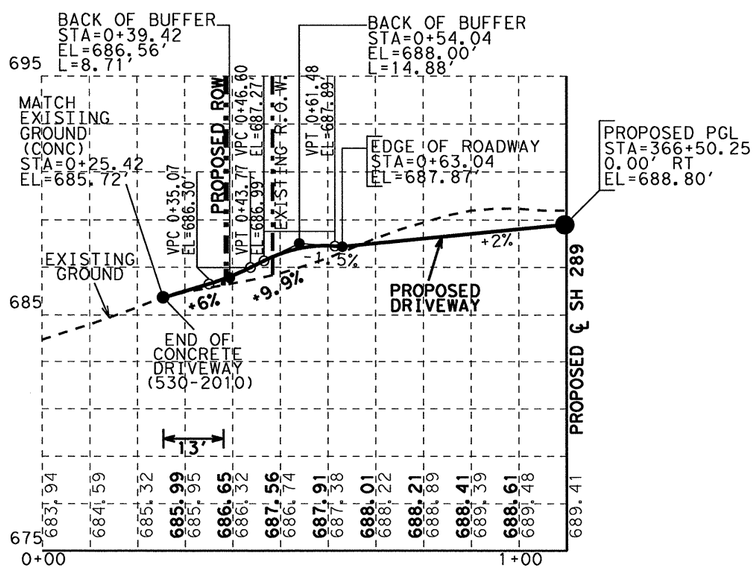

PROFILE

NOTES:

1. SEE DRIVEWAY DETAILS FOR TIE IN LIMITS.
2. SEE PROJECT LAYOUT WITH ADVANCED WARNING SIGNS FOR DRIVEWAY LOCATION.

DRIVEWAY 24

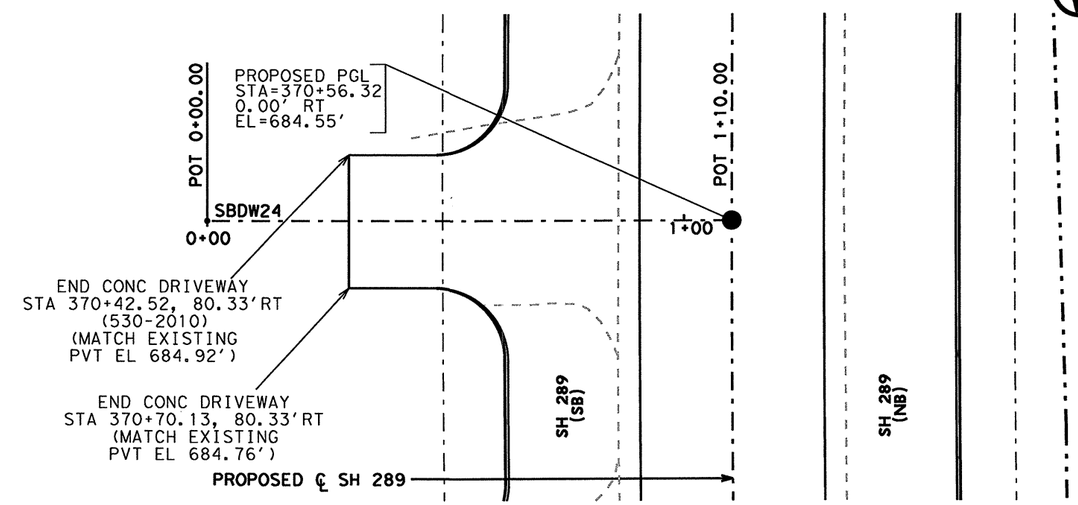

PLAN VIEW

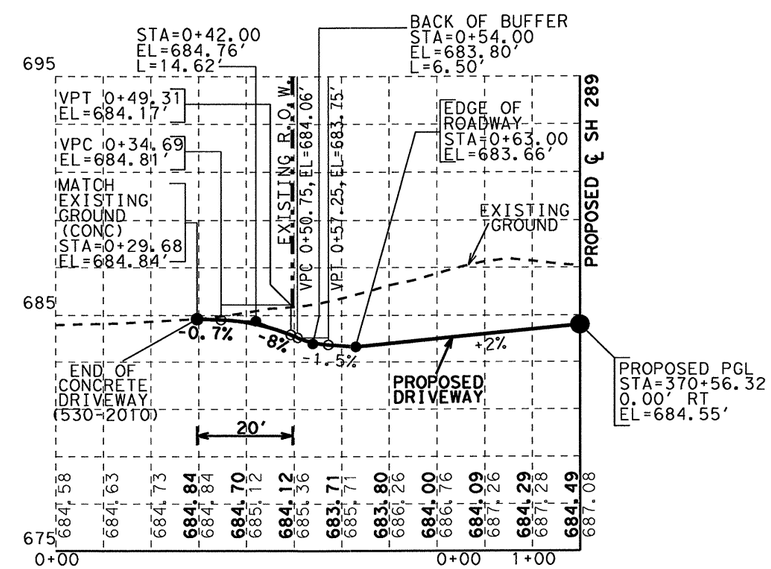

PROFILE

STATE OF TEXAS
NICHOLAS VON SPENCER
93702
LICENSED
PROFESSIONAL ENGINEER

Nicholas V Spencer, P.E. 4-7-11
Signature of Registrant & Date

Texas Department of Transportation
©2011

SH 289 DRIVEWAY 23 & 24 PLAN AND PROFILE

SCALE: HOR 1"=30' & VER 1"= 60' SHEET 14 OF 23

DESIGN	FED. RD. DIV. NO.	STATE PROJECT NO.		HIGHWAY NO.
HJL	6	SEE TITLE SHEET		SH 289
GRAPHICS HJL	STATE	DISTRICT	COUNTY	SHEET NO.
CHECK NVS	TEXAS	DALLAS	COLLIN	188
CHECK	CONTROL	SECTION	JOB	
	0091	04	055	

R-201104-01

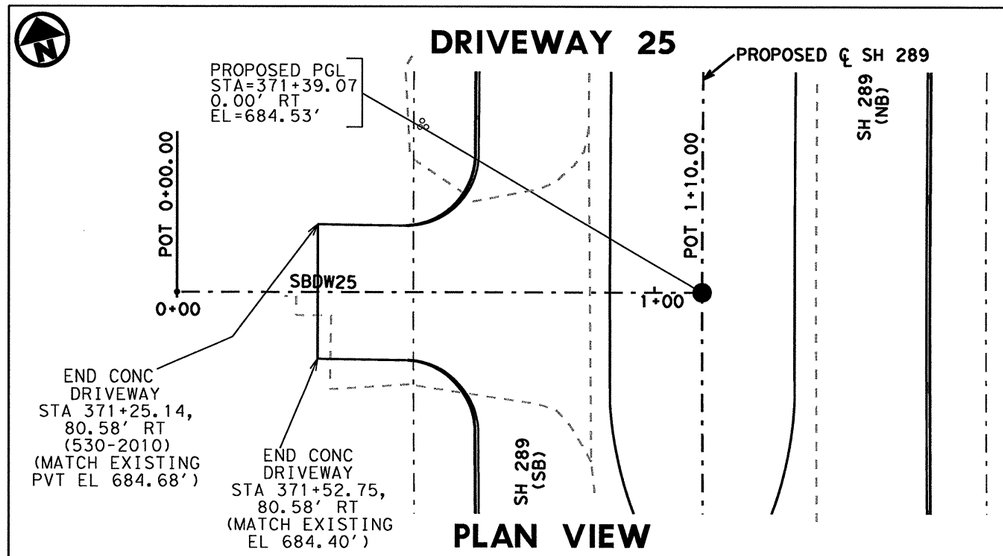

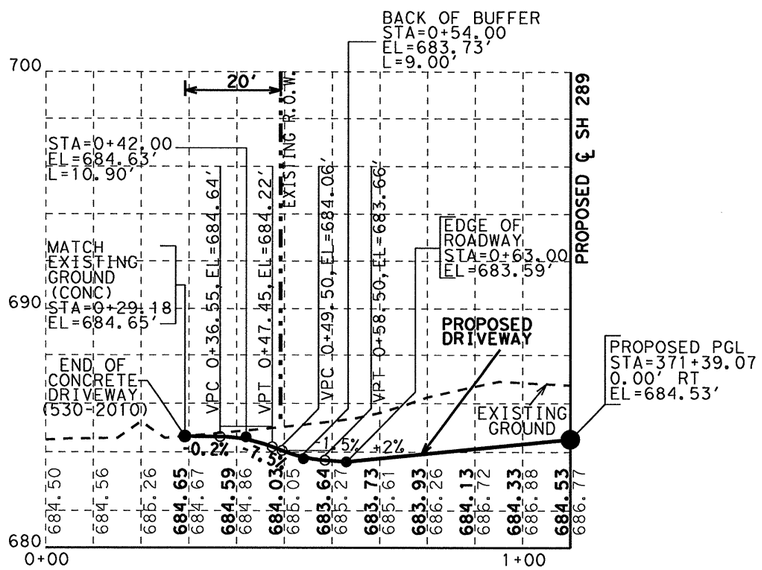

PROFILE

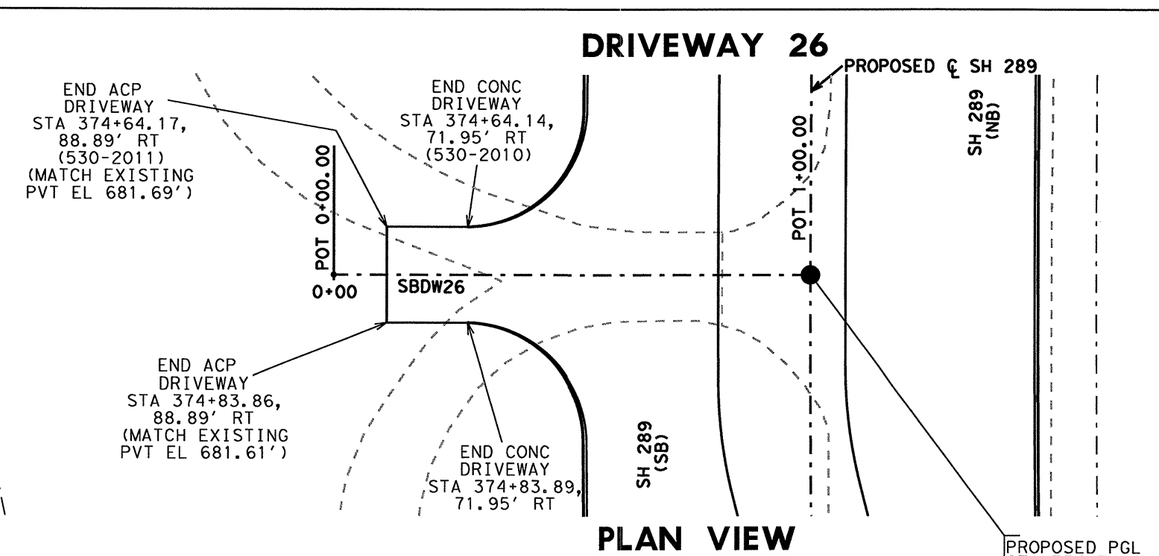

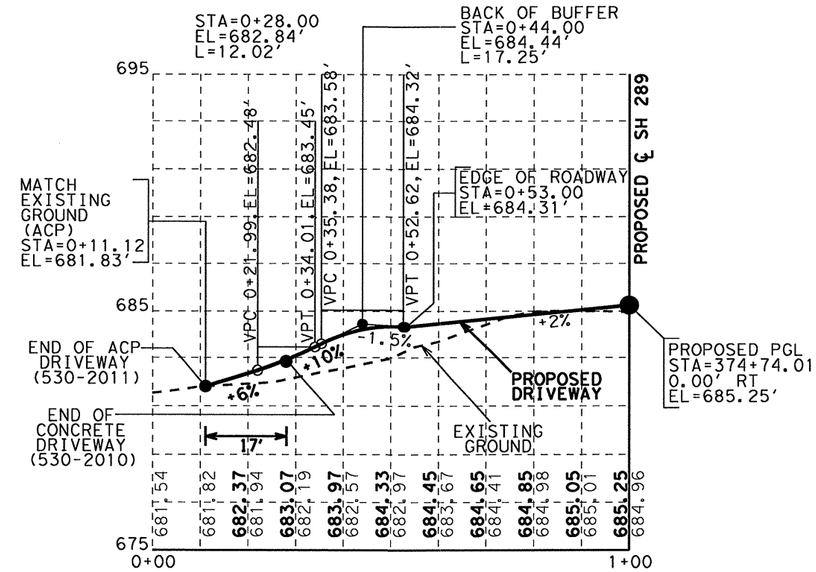

PROFILE

STATE OF TEXAS
NICHOLAS VON SPENCER
93702
LICENSED
PROFESSIONAL ENGINEER

Signature of Registrant , P.E. & Date 4-7-11

Texas Department of Transportation
©2011

SH 289 DRIVEWAY 25 & 26 PLAN AND PROFILE

SCALE: HOR 1"=30' & VER 1"= 60' SHEET 15 OF 23

DESIGN	FED. RD. DIV. NO.	STATE PROJECT NO.		HIGHWAY NO.
HJL	6	SEE TITLE SHEET		SH 289
GRAPHICS HJL	STATE	DISTRICT	COUNTY	SHEET NO.
CHECK NVS	TEXAS	DALLAS	COLLIN	189
CHECK	CONTROL	SECTION	JOB	
	0091	04	055	

NOTES:

1. SEE DRIVEWAY DETAILS FOR TIE IN LIMITS.
2. SEE PROJECT LAYOUT WITH ADVANCED WARNING SIGNS FOR DRIVEWAY LOCATION.

R-201104-01

DRIVEWAY 27

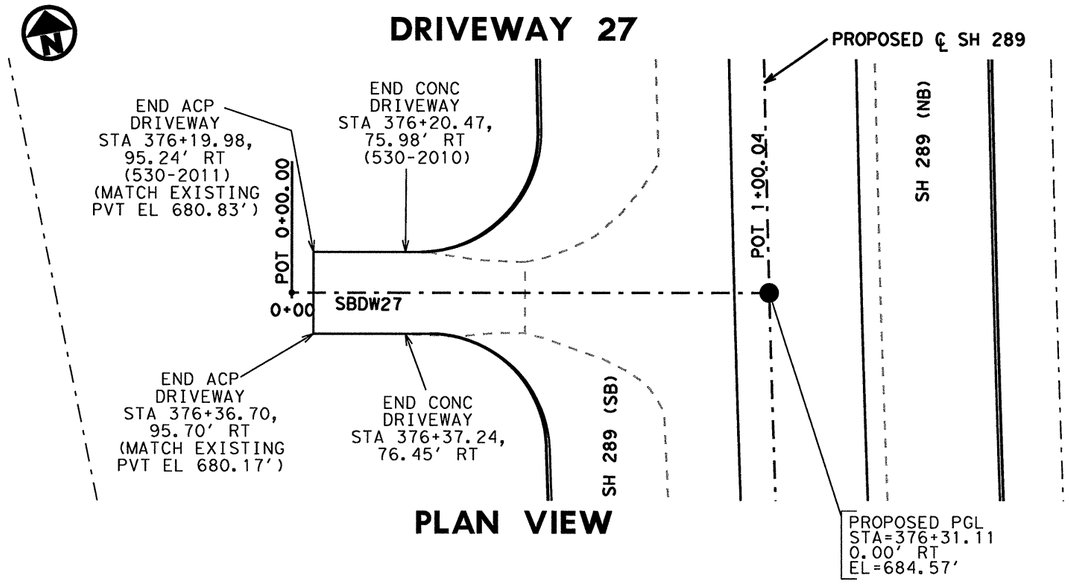

PLAN VIEW

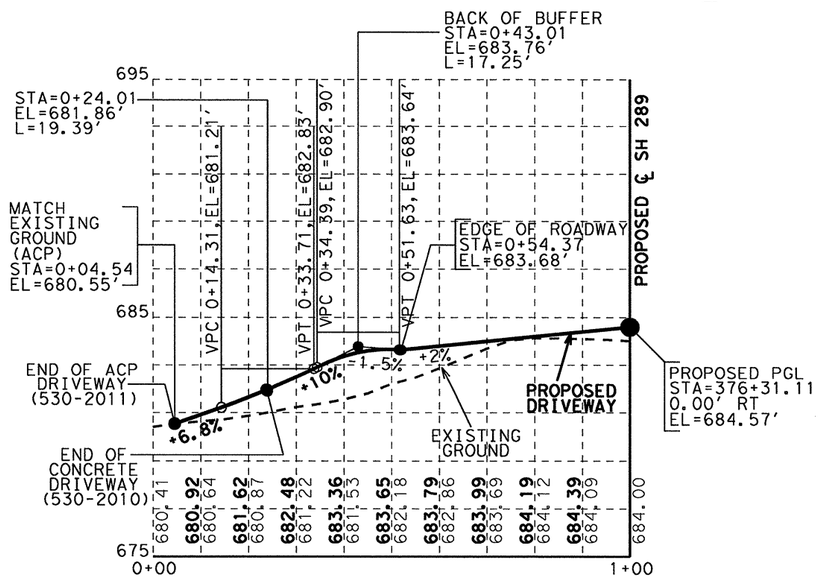

PROFILE

DRIVEWAY 28

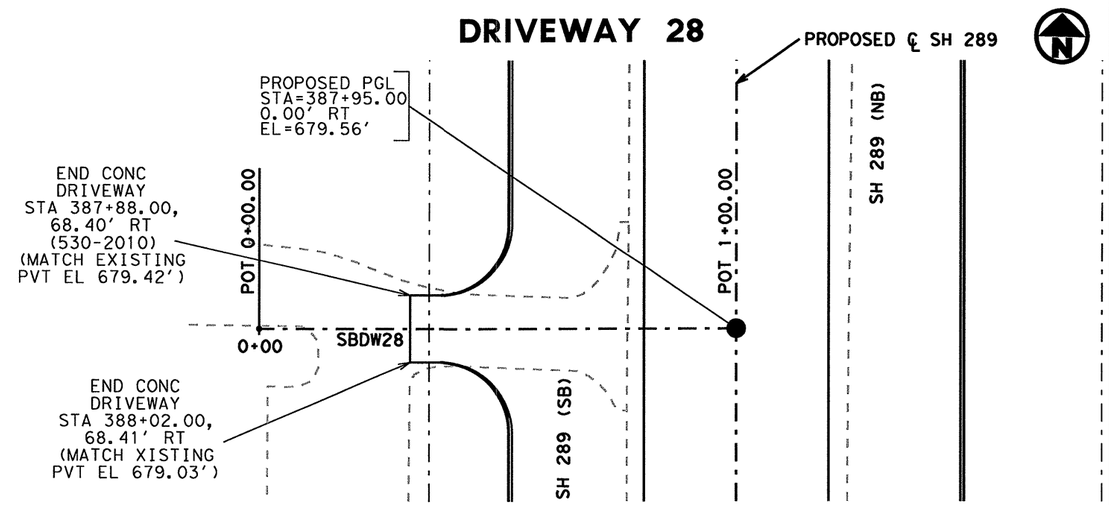

PLAN VIEW

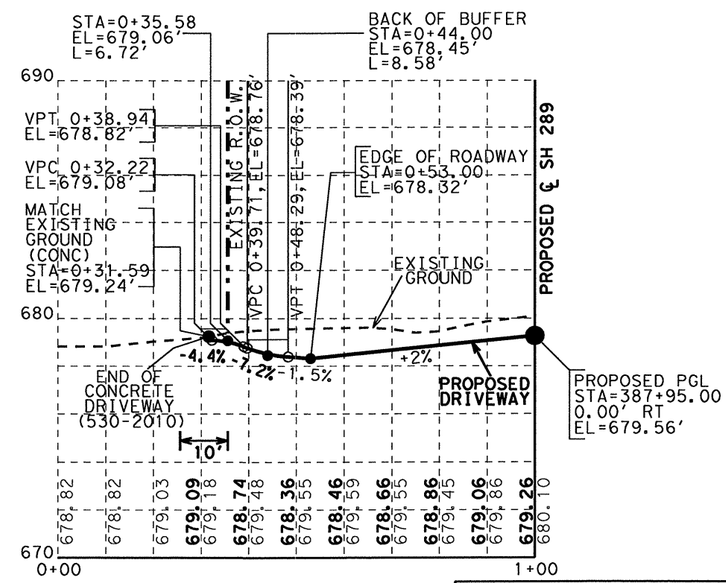

PROFILE

NOTES:

1. SEE DRIVEWAY DETAILS FOR TIE IN LIMITS.
2. SEE PROJECT LAYOUT WITH ADVANCED WARNING SIGNS FOR DRIVEWAY LOCATION.

STATE OF TEXAS
NICHOLAS VON SPENCER
93702
LICENSED PROFESSIONAL ENGINEER

Nicholas Von Spencer, P.E. 4-7-11
Signature of Registrant & Date

Texas Department of Transportation
©2011

SH 289 DRIVEWAY 27 & 28 PLAN AND PROFILE

SCALE: HOR 1"=30' & VER 1"= 60' SHEET 16 OF 23

DESIGN	FED. RD. DIV. NO.	STATE PROJECT NO.		HIGHWAY NO.
HJL	6	SEE TITLE SHEET		SH 289
GRAPHICS HJL	STATE	DISTRICT	COUNTY	SHEET NO.
CHECK NVS	TEXAS	DALLAS	COLLIN	190
CHECK	CONTROL	SECTION	JOB	
	0091	04	055	

R-201104-01

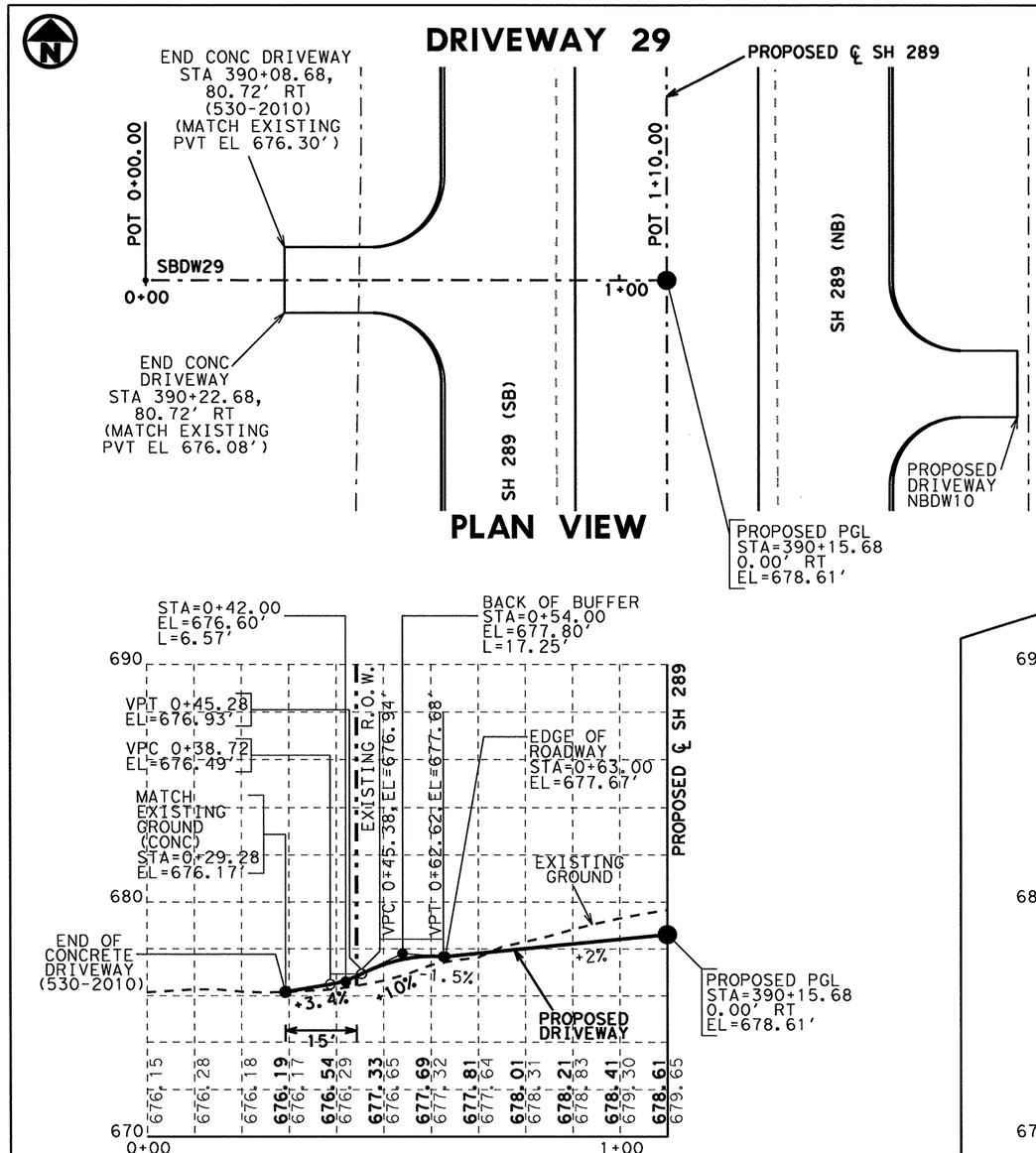

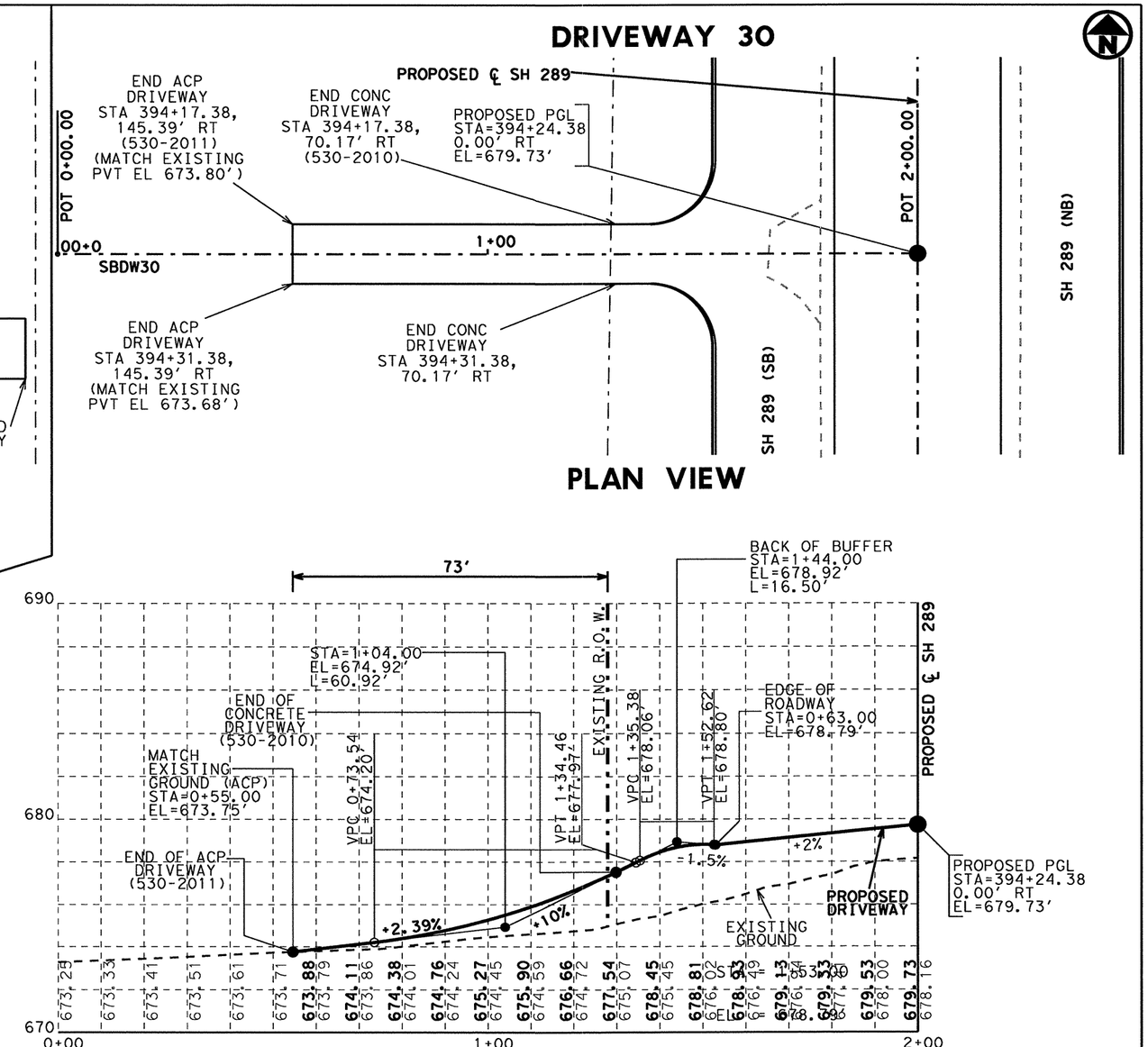

NOTES:

1. SEE DRIVEWAY DETAILS FOR TIE IN LIMITS.
2. SEE PROJECT LAYOUT WITH ADVANCED WARNING SIGNS FOR DRIVEWAY LOCATION.

STATE OF TEXAS
NICHOLAS VON SPENCER
93702
LICENSED
PROFESSIONAL ENGINEER

Nicholas V Spencer, P.E. 4-7-11
Signature of Registrant & Date

Texas Department of Transportation
©2011

SH 289 DRIVEWAY 29 & 30 PLAN AND PROFILE

SCALE: HOR 1"=30' & VER 1"= 60' SHEET 17 OF 23

DESIGN	FED. RD. DIV. NO.	STATE PROJECT NO.		HIGHWAY NO.
HJL	6	SEE TITLE SHEET		SH 289
GRAPHICS HJL	STATE	DISTRICT	COUNTY	SHEET NO.
CHECK NVS	TEXAS	DALLAS	COLLIN	191
CHECK	CONTROL	SECTION	JOB	
	0091	04	055	

R-201104-01

DRIVEWAY 31

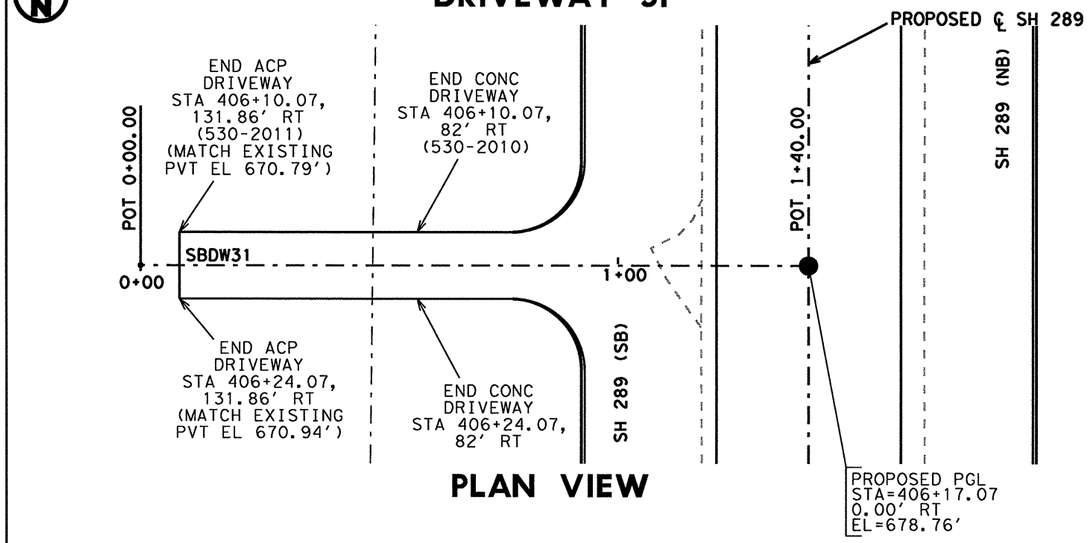

PLAN VIEW

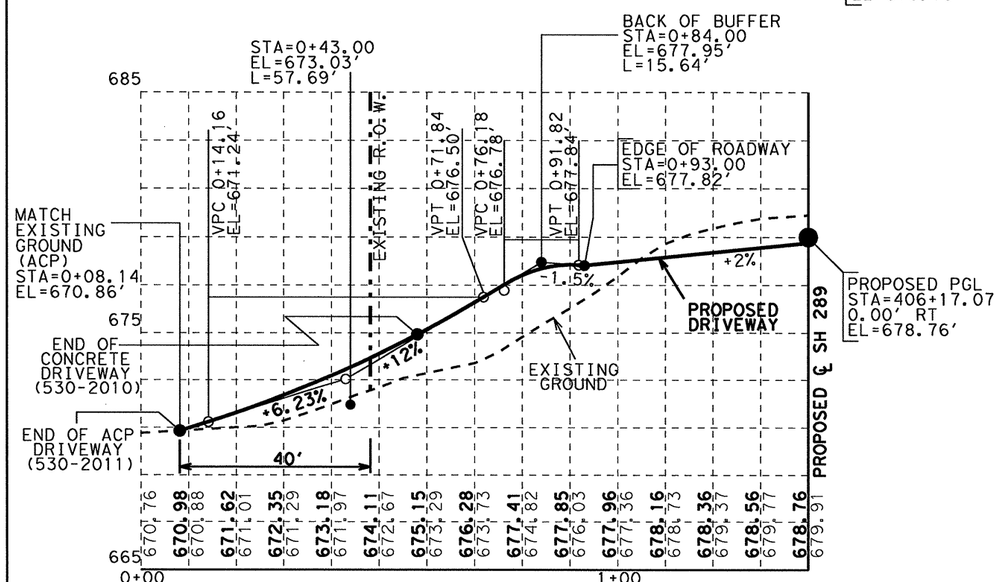

PROFILE

DRIVEWAY 32

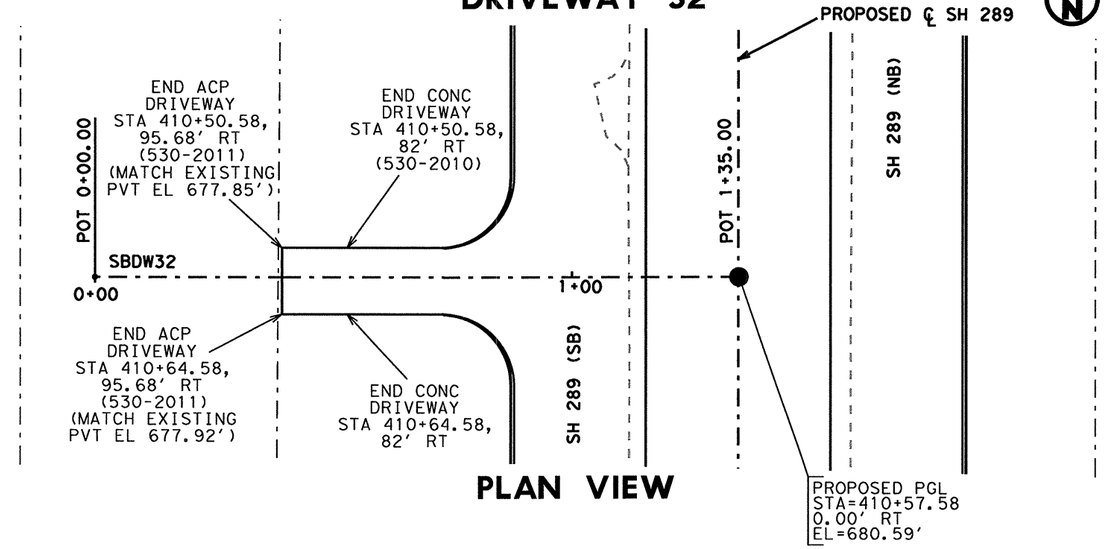

PLAN VIEW

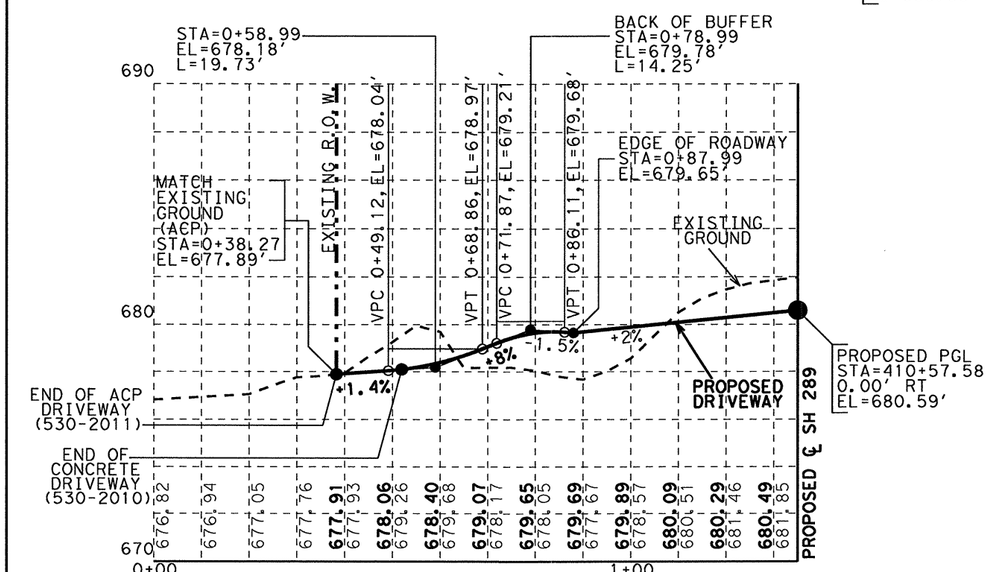

PROFILE

NOTES:

1. SEE DRIVEWAY DETAILS FOR TIE IN LIMITS.
2. SEE PROJECT LAYOUT WITH ADVANCED WARNING SIGNS FOR DRIVEWAY LOCATION.

STATE OF TEXAS
NICHOLAS VON SPENCER
93702
LICENSED PROFESSIONAL ENGINEER

Nicholas V Spencer, P.E. 4-7-11
Signature of Registrant & Date

Texas Department of Transportation
©2011

SH 289 DRIVEWAY 31 & 32 PLAN AND PROFILE

SCALE: HOR 1"=30' & VER 1"= 60' SHEET 18 OF 23

DESIGN	FED. RD. DIV. NO.	STATE PROJECT NO.		HIGHWAY NO.
HJL	6	SEE TITLE SHEET		SH 289
GRAPHICS HJL	STATE	DISTRICT	COUNTY	SHEET NO.
CHECK NVS	TEXAS	DALLAS	COLLIN	192
CHECK	CONTROL	SECTION	JOB	
	0091	04	055	

R-201104-01

DRIVEWAY 33

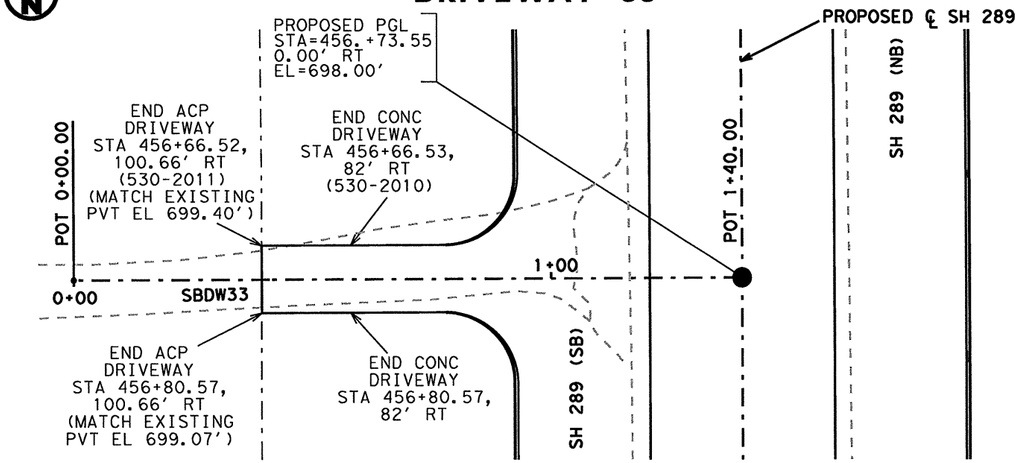

PLAN VIEW

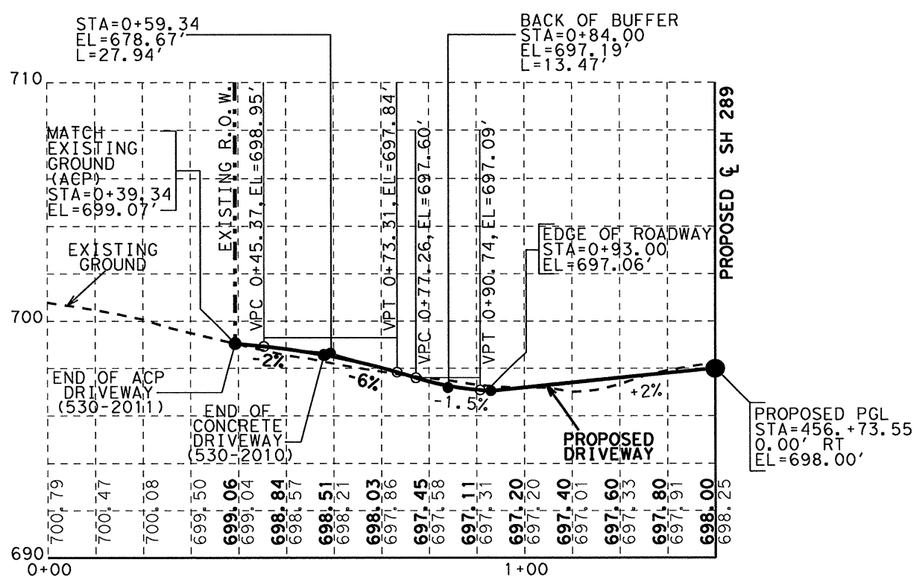

PROFILE

DRIVEWAY 34

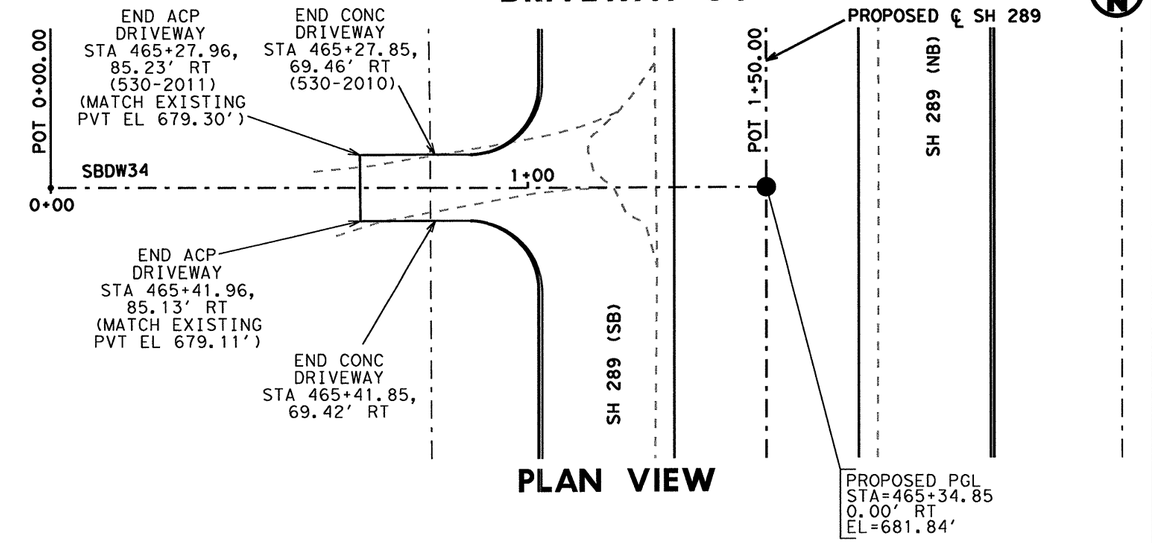

PLAN VIEW

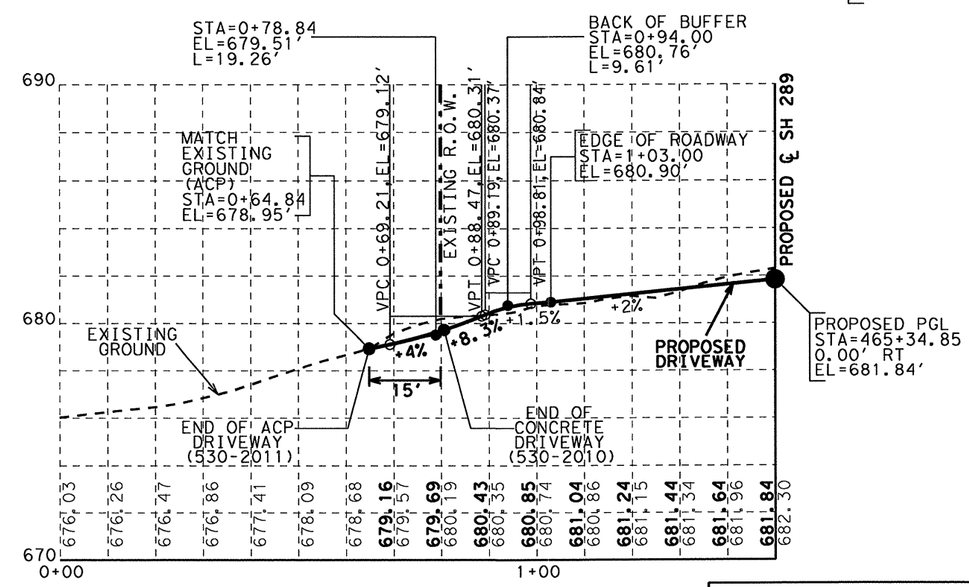

PROFILE

NOTES:

1. SEE DRIVEWAY DETAILS FOR TIE IN LIMITS.
2. SEE PROJECT LAYOUT WITH ADVANCED WARNING SIGNS FOR DRIVEWAY LOCATION.

STATE OF TEXAS
NICHOLAS VON SPENCER
93702
LICENSED
PROFESSIONAL ENGINEER

Signature of Registrant, P.E. & Date: 4-7-11

Texas Department of Transportation ©2011

SH 289 DRIVEWAY 33 & 34 PLAN AND PROFILE

SCALE: HOR 1"=30' & VER 1"= 60' SHEET 19 OF 23

DESIGN HJL	FED. RD. DIV. NO.	STATE PROJECT NO.		HIGHWAY NO.
GRAPHICS HJL	6	SEE TITLE SHEET		SH 289
	STATE	DISTRICT	COUNTY	SHEET NO.
CHECK NVS	TEXAS	DALLAS	COLLIN	193
CHECK	CONTROL	SECTION	JOB	
	0091	04	055	

R-201104-01

DRIVEWAY 35

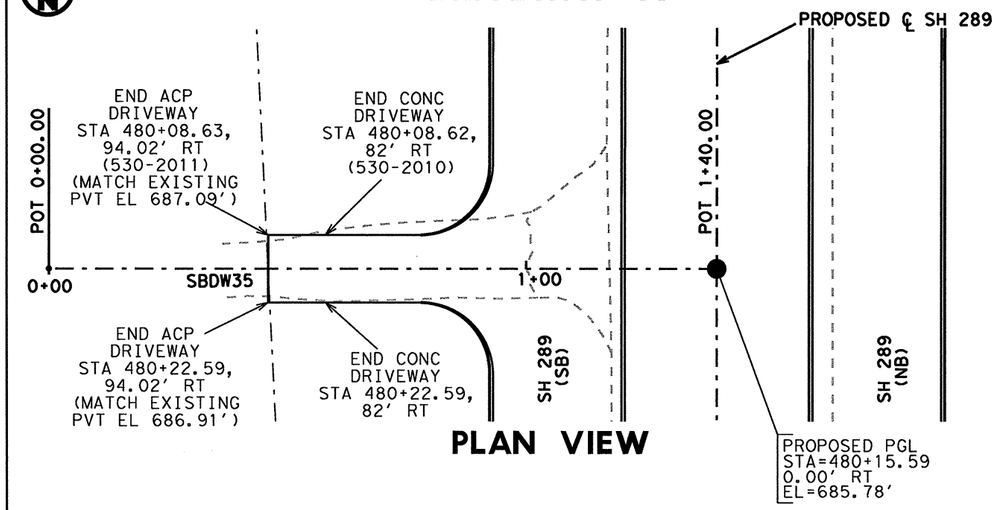

PLAN VIEW

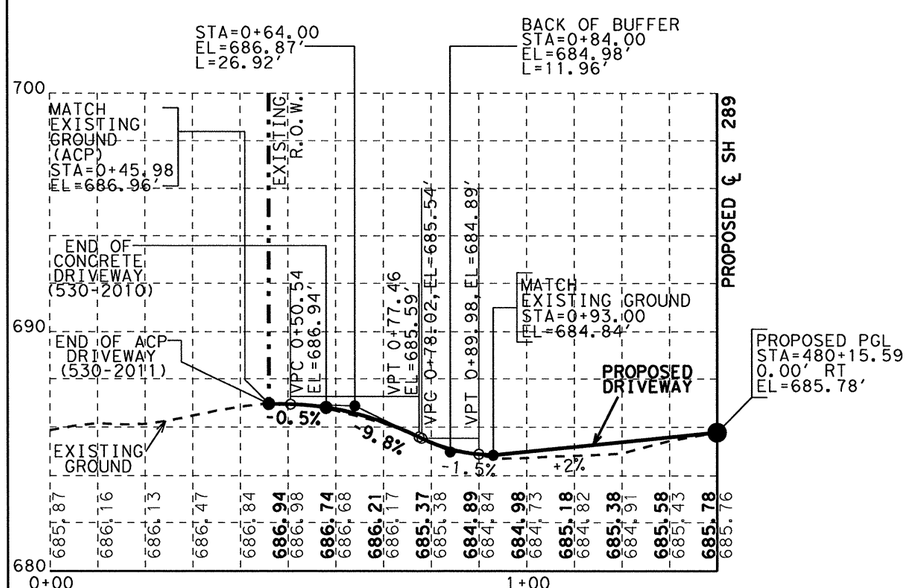

PROFILE

DRIVEWAY 36

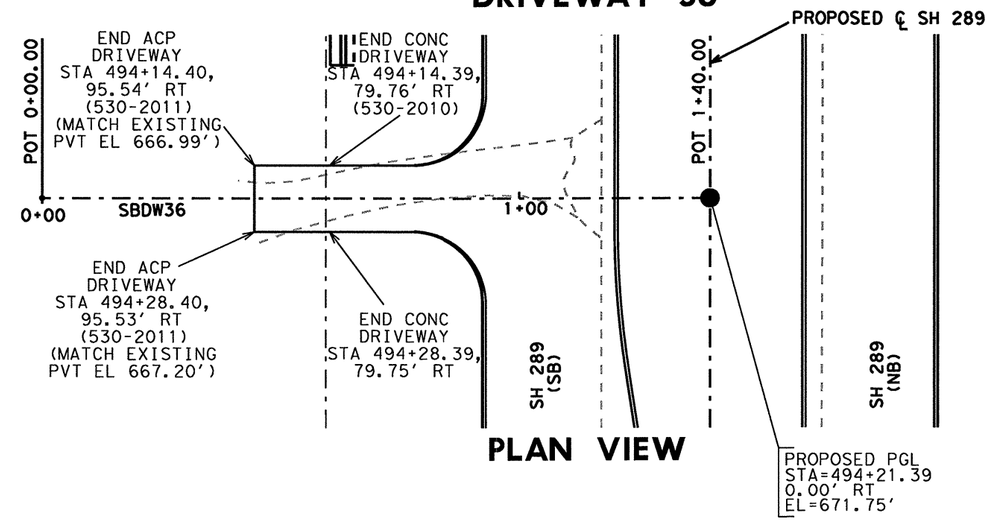

PLAN VIEW

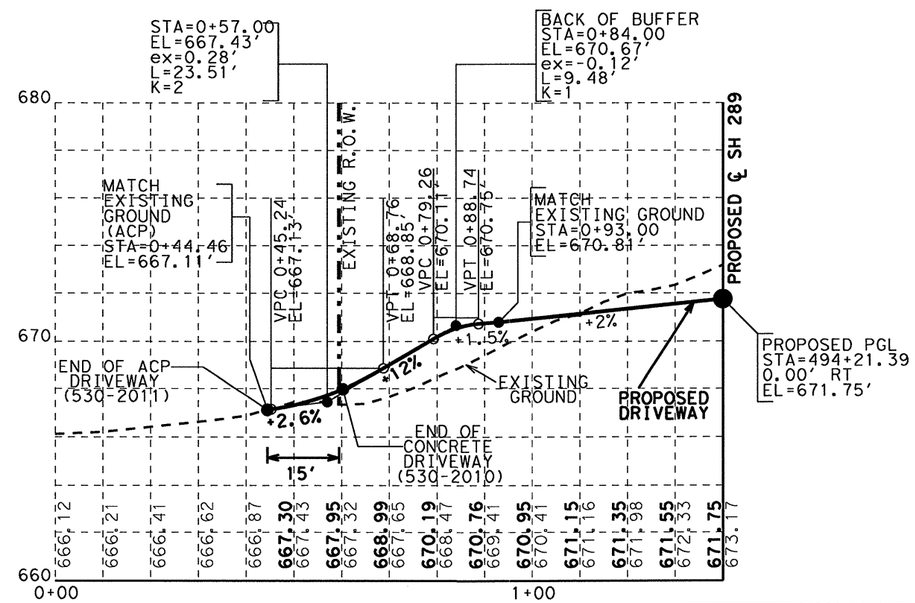

PROFILE

NOTES:

1. SEE DRIVEWAY DETAILS FOR TIE IN LIMITS.
2. SEE PROJECT LAYOUT WITH ADVANCED WARNING SIGNS FOR DRIVEWAY LOCATION.

STATE OF TEXAS
NICHOLAS VON SPENCER
93702
LICENSED PROFESSIONAL ENGINEER

Nicholas V Spencer, P.E. 4-7-11
Signature of Registrant & Date

Texas Department of Transportation ©2011

SH 289 DRIVEWAY 35 & 36 PLAN AND PROFILE

SCALE: HOR 1"=30' & VER 1"= 60' SHEET 20 OF 23

DESIGN HJL	FED. RD. DIV. NO.	STATE PROJECT NO.		HIGHWAY NO.
GRAPHICS HJL	6	SEE TITLE SHEET		SH 289
	STATE	DISTRICT	COUNTY	SHEET NO.
CHECK NVS	TEXAS	DALLAS	COLLIN	194
CHECK	CONTROL	SECTION	JOB	
	0091	04	055	

R-201104-01

DRIVEWAY 37

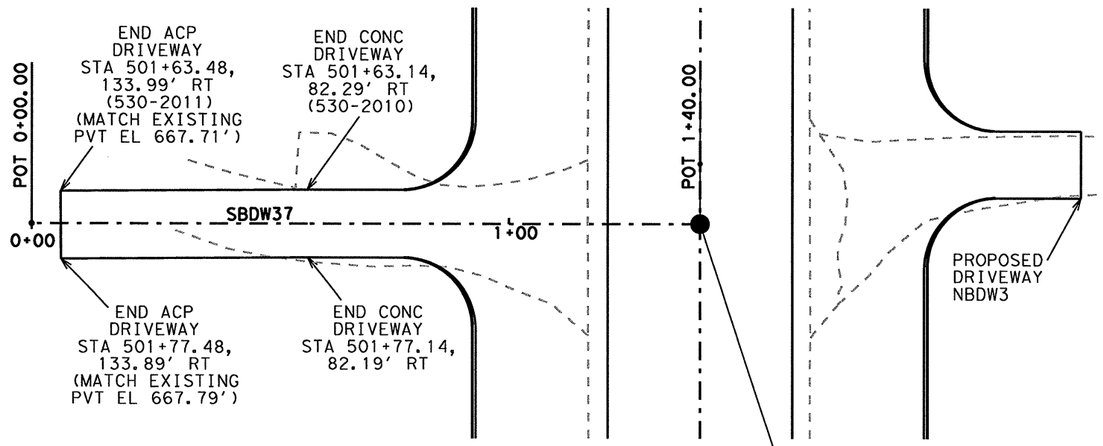

PLAN VIEW

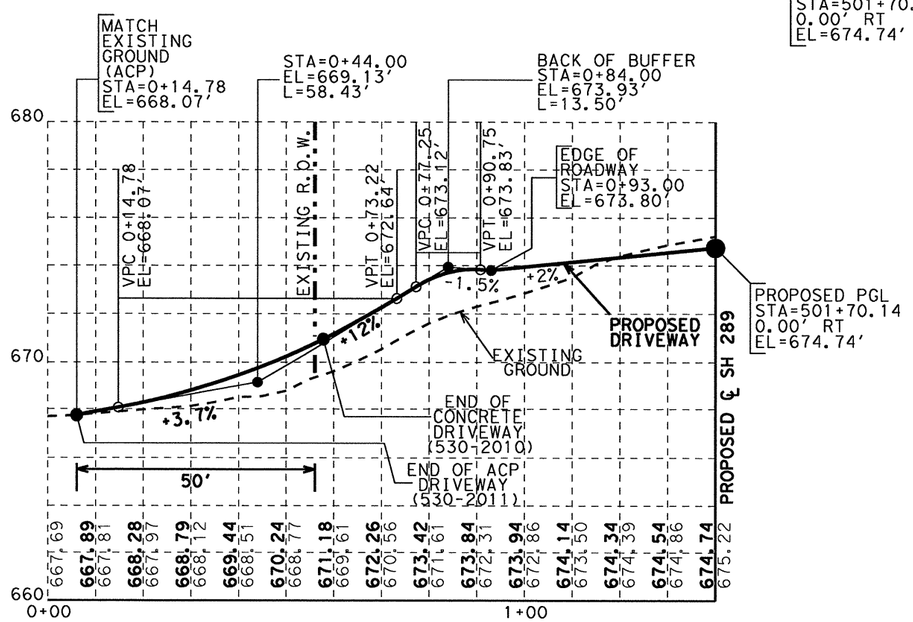

PROFILE

DRIVEWAY 38

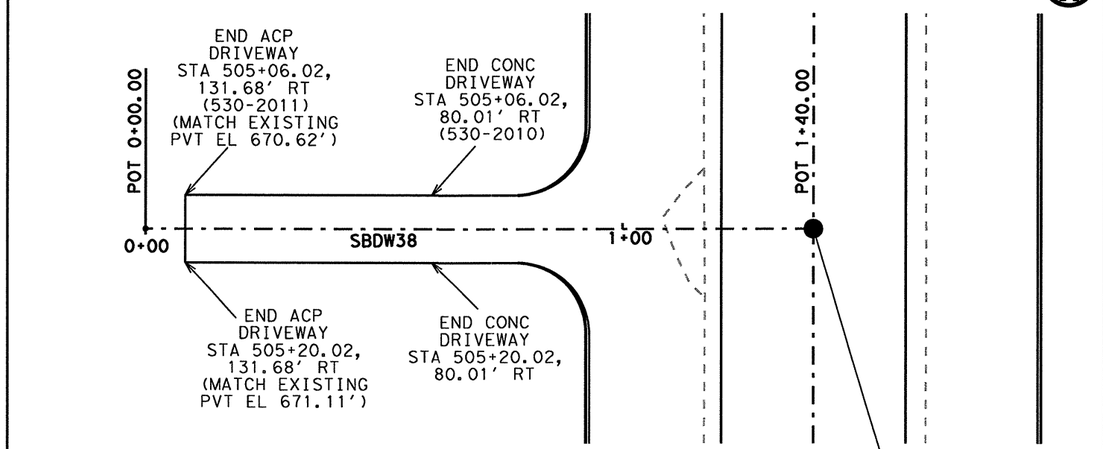

PLAN VIEW

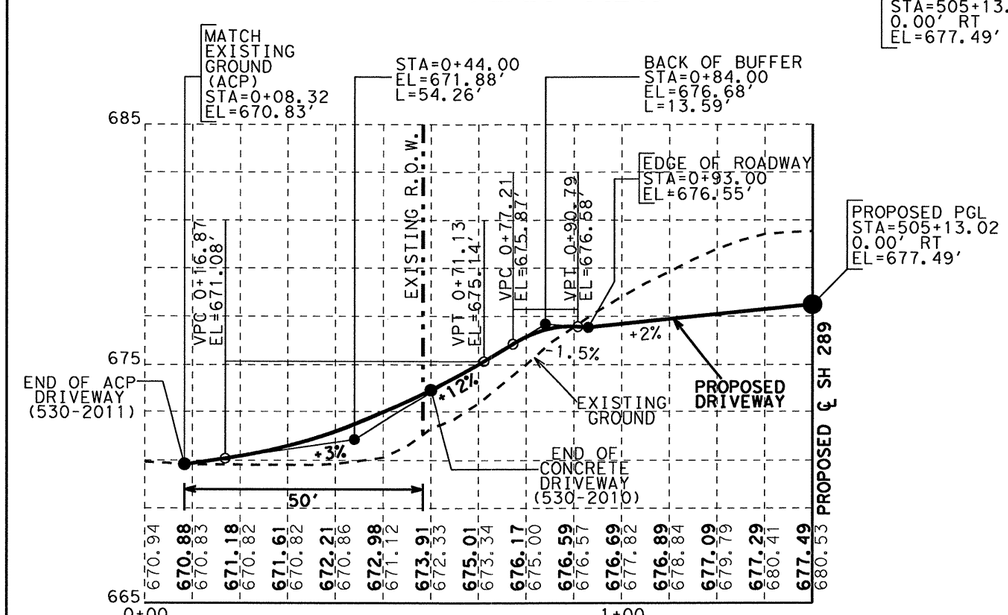

PROFILE

NOTES:

1. SEE DRIVEWAY DETAILS FOR TIE IN LIMITS.
2. SEE PROJECT LAYOUT WITH ADVANCED WARNING SIGNS FOR DRIVEWAY LOCATION.

STATE OF TEXAS
NICHOLAS VON SPENCER
93702
LICENSED PROFESSIONAL ENGINEER

Nicholas Von Spencer, P.E. 4-7-11
Signature of Registrant & Date

Texas Department of Transportation
©2011

SH 289 DRIVEWAY 37 & 38 PLAN AND PROFILE

SCALE: HOR 1"=30' & VER 1"= 60' SHEET 21 OF 23

DESIGN HJL	FED. RD. DIV. NO.	STATE PROJECT NO.		HIGHWAY NO.
GRAPHICS HJL	6	SEE TITLE SHEET		SH 289
	STATE	DISTRICT	COUNTY	SHEET NO.
CHECK NVS	TEXAS	DALLAS	COLLIN	195
CHECK	CONTROL	SECTION	JOB	
	0091	04	055	

DRIVEWAY 39

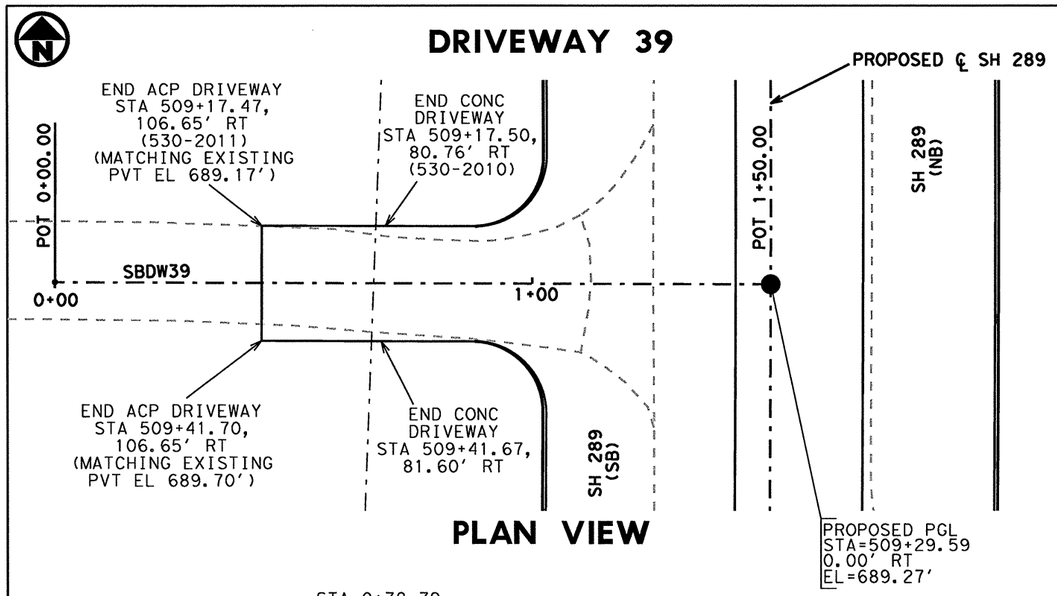

PLAN VIEW

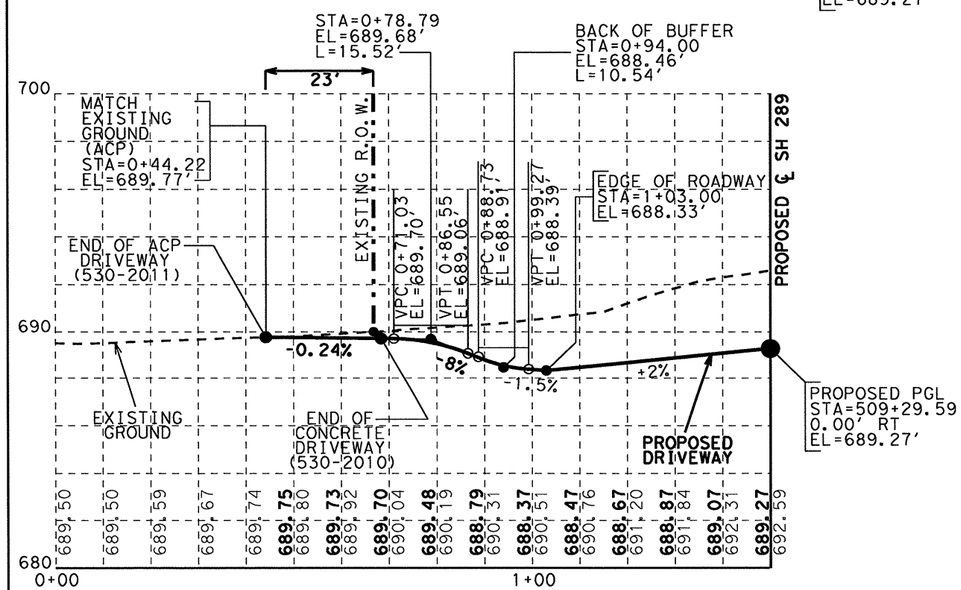

PROFILE

DRIVEWAY 40

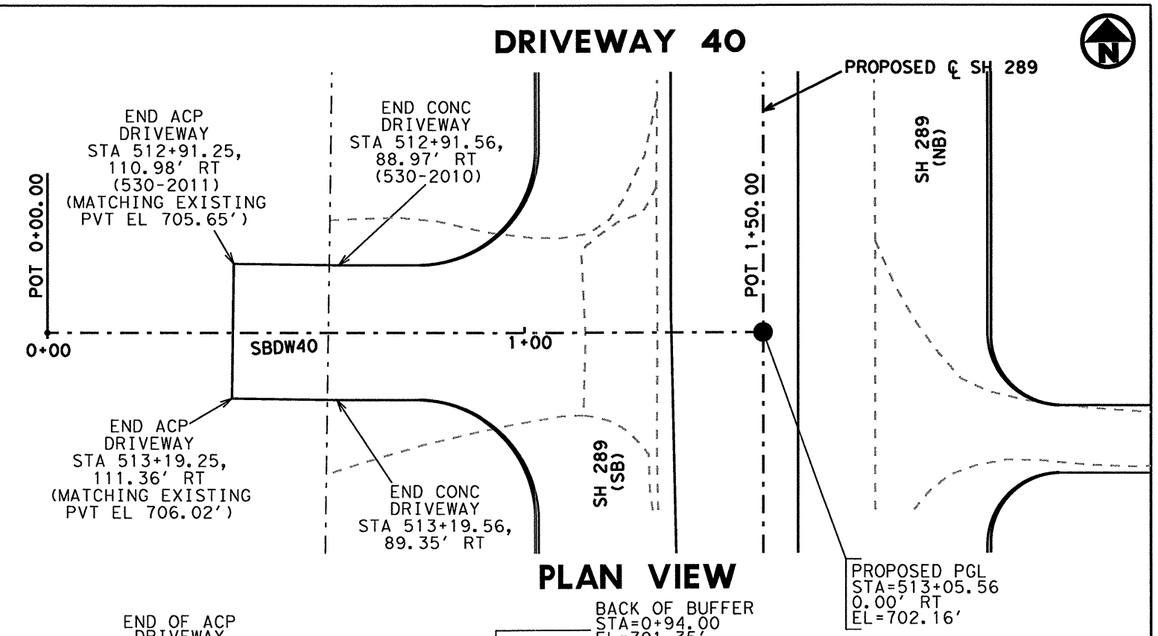

PLAN VIEW

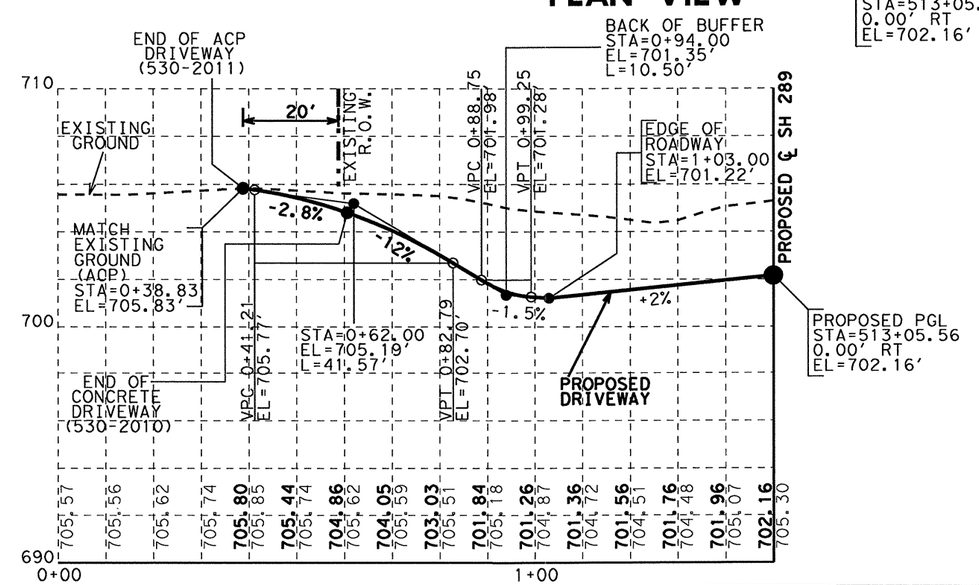

PROFILE

NOTES:

1. SEE DRIVEWAY DETAILS FOR TIE IN LIMITS.
2. SEE PROJECT LAYOUT WITH ADVANCED WARNING SIGNS FOR DRIVEWAY LOCATION.

STATE OF TEXAS
NICHOLAS VON SPENCER
93702
LICENSED
PROFESSIONAL ENGINEER

Nicholas Von Spencer, P.E. 4-7-11
Signature of Registrant & Date

Texas Department of Transportation
©2011

SH 289 DRIVEWAY 39 & 40 PLAN AND PROFILE

SCALE: HOR 1"=30' & VER 1"= 60' SHEET 22 OF 23

DESIGN	FED. RD. DIV. NO.	STATE PROJECT NO.		HIGHWAY NO.
HJL	6	SEE TITLE SHEET		SH 289
GRAPHICS HJL	STATE	DISTRICT	COUNTY	SHEET NO.
CHECK NVS	TEXAS	DALLAS	COLLIN	196
CHECK	CONTROL	SECTION	JOB	
	0091	04	055	

DRIVEWAY 41

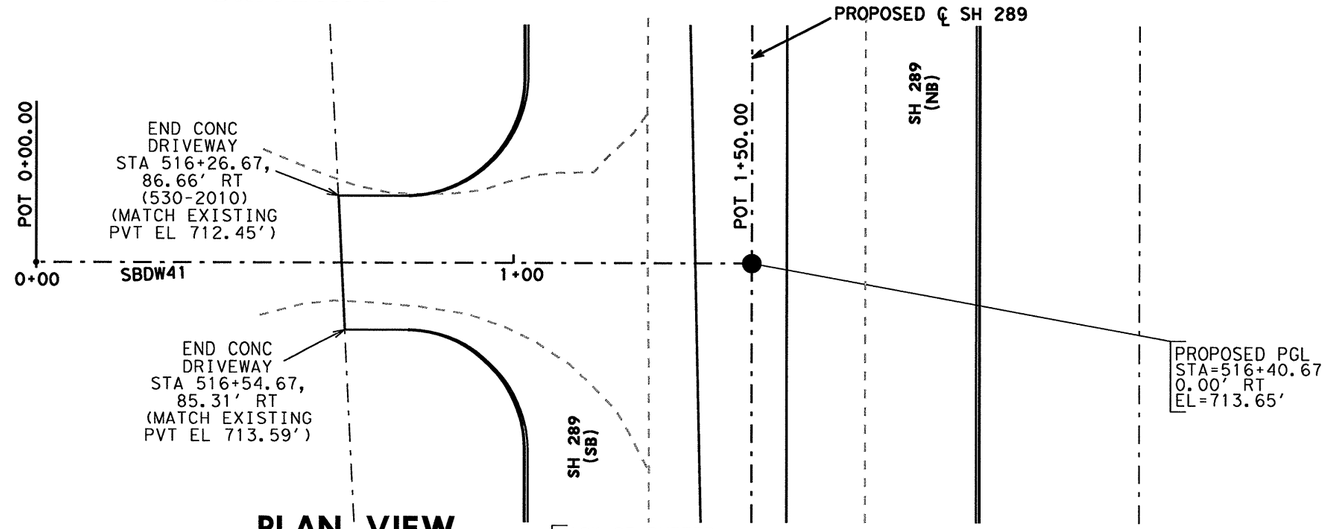

PLAN VIEW

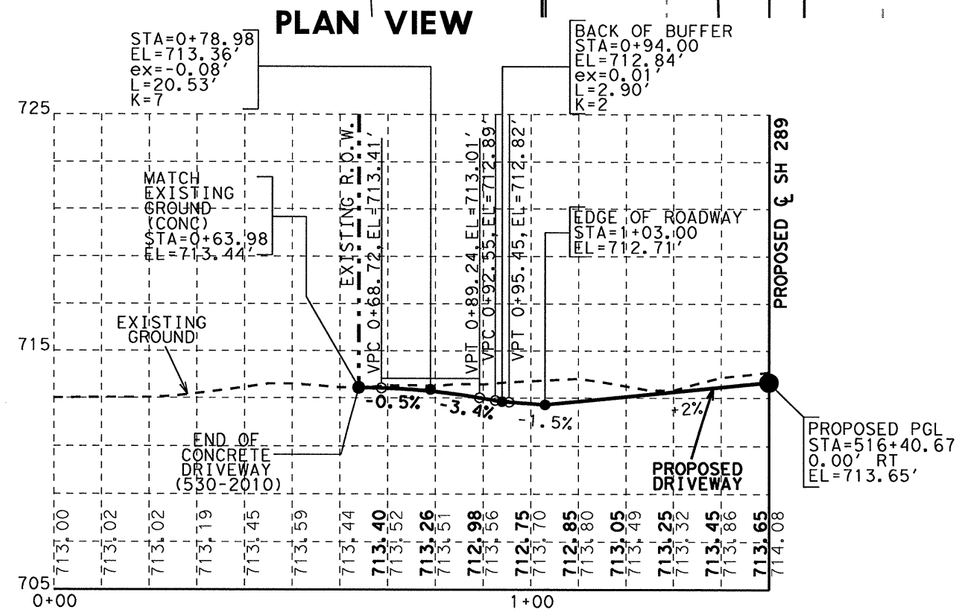

PROFILE

NOTES:

1. SEE DRIVEWAY DETAILS FOR TIE IN LIMITS.
2. SEE PROJECT LAYOUT WITH ADVANCED WARNING SIGNS FOR DRIVEWAY LOCATION.

STATE OF TEXAS
NICHOLAS VON SPENCER
93702
LICENSED PROFESSIONAL ENGINEER

Nicholas Von Spencer, P.E. 4-7-11
Signature of Registrant & Date

Texas Department of Transportation
©2011

SH 289
DRIVEWAY 41
PLAN AND PROFILE

SCALE: HOR 1"=30' & VER 1"= 60' SHEET 23 OF 23

DESIGN HJL	FED. RD. DIV. NO.	STATE PROJECT NO.		HIGHWAY NO.
GRAPHICS HJL	6	SEE TITLE SHEET		SH 289
	STATE	DISTRICT	COUNTY	SHEET NO.
CHECK NVS	TEXAS	DALLAS	COLLIN	197
CHECK	CONTROL	SECTION	JOB	
	0091	04	055	

R-201104-01

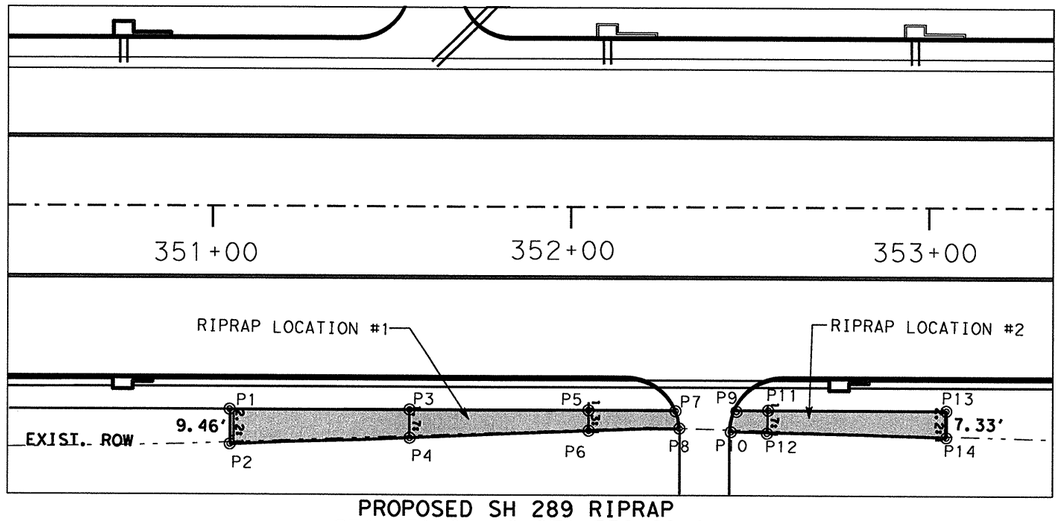

PROPOSED SH 289 RIPRAP
STA 351+05 TO STA 352+29.81

PROPOSED SH 289 RIPRAP
STA 351+05 TO STA 352+29.81

POINT	STA	OFFSET	LT/RT	ELEV
P1	351+05.00	56.39	RT	695.79
P2	351+05.00	63.46	RT	692.55
P3	351+55.00	56.35	RT	696.01
P4	351+55.00	61.57	RT	692.9
P5	352+05.00	56.22	RT	696.32
P6	352+05.00	59.68	RT	693.68
P7	352+29.21	56.28	RT	695.52
P8	352+30.40	61.38	RT	693.76
P9	352+45.75	56	RT	695.32
P10	352+44.44	61.82	RT	693.46
P11	352+55.00	56.11	RT	696.6
P12	352+55.00	59.97	RT	694.39
P13	353+05.00	56.02	RT	696.83
P14	353+05.00	61.33	RT	694.64

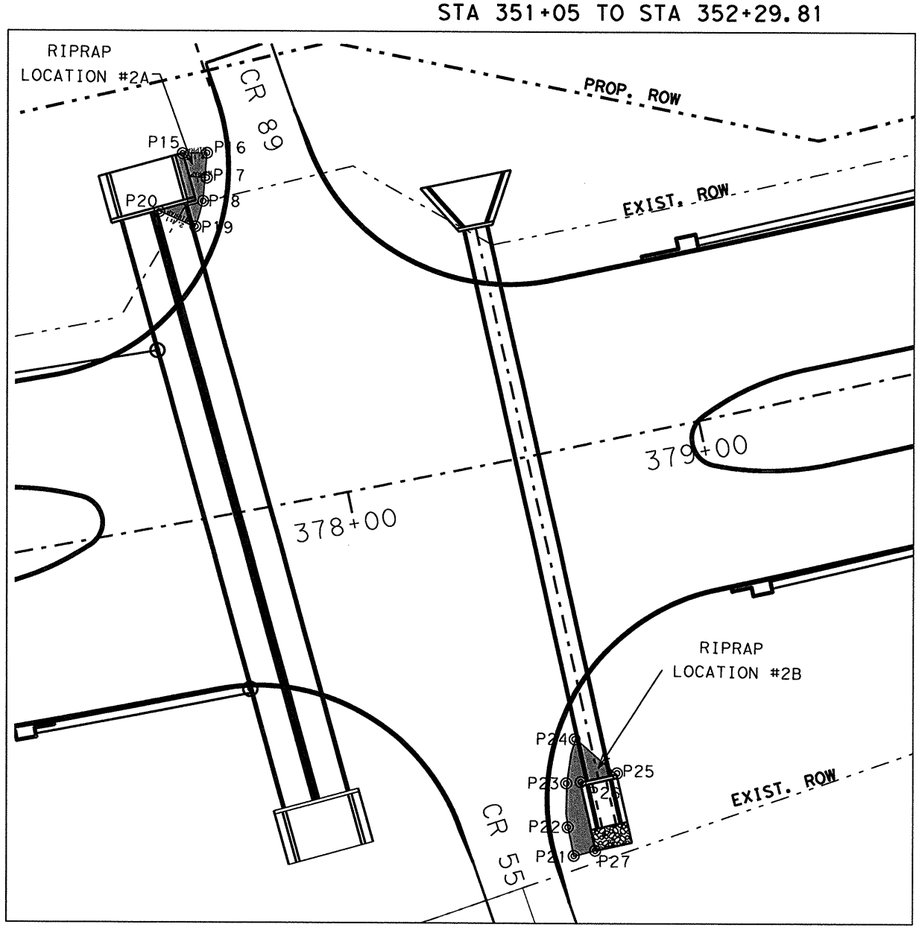

PROPOSED SH 289 RIPRAP

POINT	STA	OFFSET	LT/RT	ELEV
P15	377+72.27	102.45	LT	679.52
P16	37+79.08	101.39	LT	683.76
P17	377+77.67	94.57	LT	683.89
P18	377+75.46	88.23	LT	683.91
P19	377+71.95	81.51	LT	684.23
P20	377+62.12	87.78	LT	683
P21	378+41.57	112.15	RT	679.64
P22	378+41.59	103.74	RT	680.63
P23	378+43.84	91.35	RT	680.98
P24	378+48.65	79.96	RT	680.63
P25	378+57.89	91.91	RT	680
P26	378+47.54	92.1	RT	680
P27	378+47.91	111.81	RT	675.31

PROPOSED RIPRAP RR9

STATE OF TEXAS
NICHOLAS VON SPENCER
93702
LICENSED
PROFESSIONAL ENGINEER

Signature of Registrant , P.E. & Date 5-25-11

Texas Department of Transportation
© 2011

SH 289 RIPRAP DETAIL

SCALE: 1"= 40'

SHEET 1 OF 2

DESIGN	FED. RD. DIV. NO.	STATE PROJECT NO.		HIGHWAY NO.
NVS	6			SH 289
GRAPHICS NVS	STATE	DISTRICT	COUNTY	SHEET NO.
CHECK	TEXAS	18	COLLIN	198
CHECK	CONTROL	SECTION	JOB	
	0091	04	055	

R-201104-01

LOCATION #4 PROPOSED SH 289 RIPRAP
STA 419+74.12 TO STA 425+05

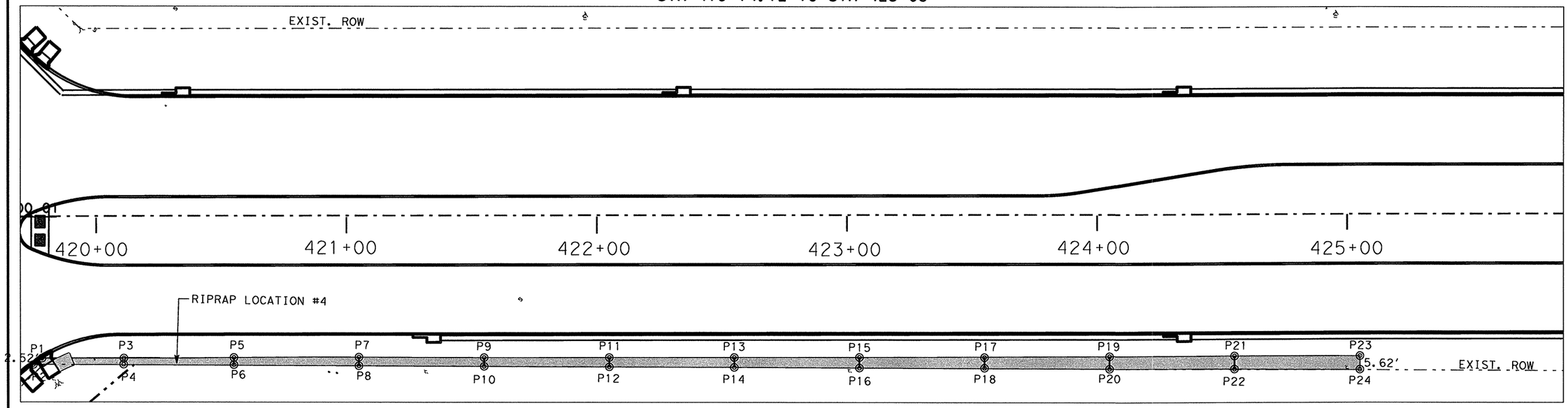

LOCATION #3 PROPOSED SH 289 RIPRAP
STA 391+66.78 TO STA 391+83.26

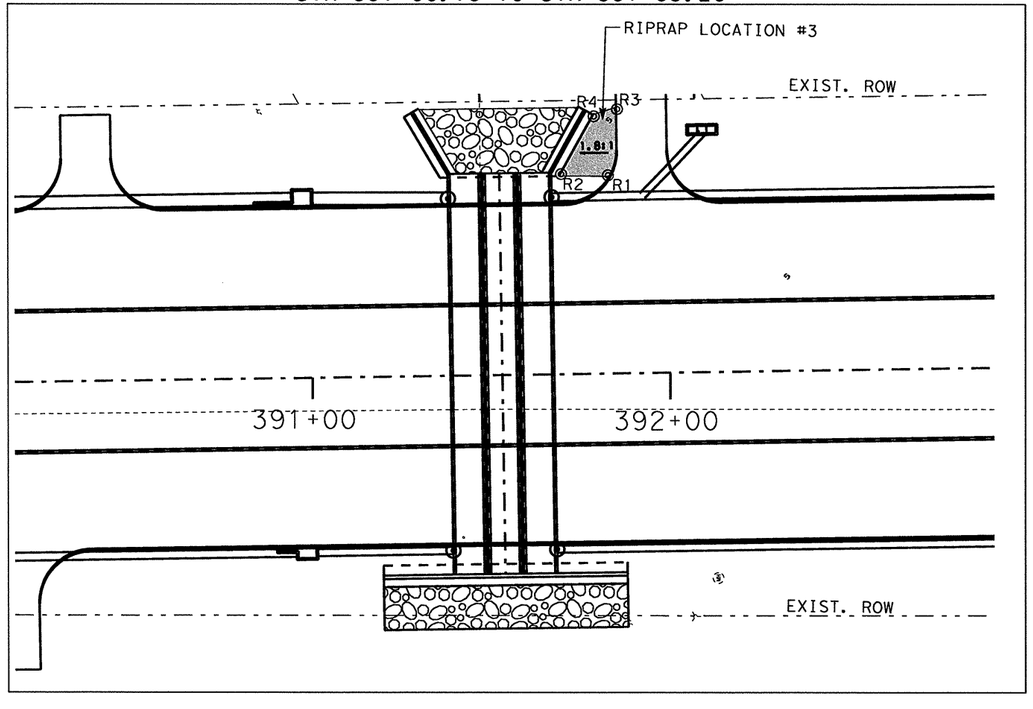

POINT	STA	OFFSET	LT/RT	ELEV
P1	419+74.12	54'	RT	682.99
P2	419+74.12	59.22	RT	678.75
P3	420+05.00	55.8	RT	682.83
P4	420+05.00	57.68	RT	679.3
P5	420+55.00	56.03	RT	682.86
P6	420+55.00	57.93	RT	679.41
P7	421+05.00	56.17	RT	682.38
P8	421+05.00	58.21	RT	679.13
P9	421+55.00	56.17	RT	682.38
P10	421+55.00	58.49	RT	679.2
P11	422+05.00	56.17	RT	681.93
P12	422+05.00	58.77	RT	679.74
P13	422+55.00	56.57	RT	681.3
P14	422+55.00	59.05	RT	678.84
P15	423+05.00	56.13	RT	681.47
P16	423+05.00	59.33	RT	678.75
P17	423+55.00	56	RT	681.24
P18	423+55.00	59.6	RT	678.62
P19	424+05.00	55.937	RT	681.01
P20	424+05.00	59.88	RT	678.62
P21	424+55.00	56.17	RT	680.79
P22	424+55.00	60.16	RT	678.54
P23	425+05.00	56.18	RT	680.56
P24	425+05.00	60.45	RT	678.47
POINT	STA	OFFSET	LT/RT	ELEV
R1	419+74.12	54.62	LT	677.79
R2	419+74.12	55.23	LT	675.48
R3	420+05.00	74.17	LT	676.74
R4	420+05.00	72.15	LT	671.42

PROPOSED RIPRAP RR9

STATE OF TEXAS
NICHOLAS VON SPENCER
93702
LICENSED
PROFESSIONAL ENGINEER

Signature of Registrant, P.E. & Date 4-7-11

Texas Department of Transportation
© 2011

SH 289 RIPRAP DETAIL

SCALE: 1" = 40'

SHEET 2 OF 2

DESIGN	FED. RD. DIV. NO.	STATE PROJECT NO.		HIGHWAY NO.
NVS	6	C 91-4-55		SH 289
GRAPHICS	STATE	DISTRICT	COUNTY	SHEET NO.
NVS	TEXAS	18	COLLIN	199
CHECK	CONTROL	SECTION	JOB	
CHECK	0091	04	055	

R-201104-01

CONCRETE SIDEWALK DETAILS

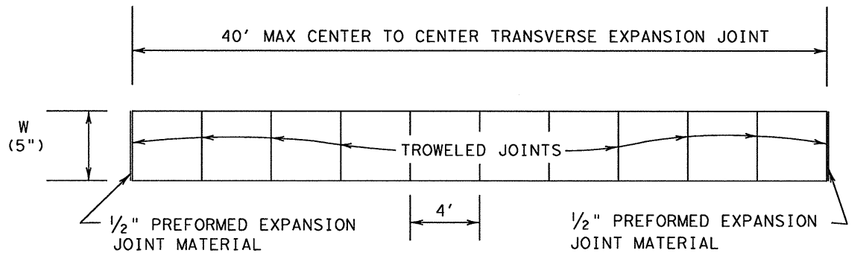

SIDEWALK PLAN

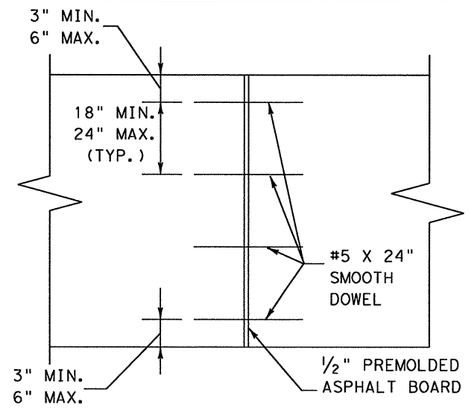

SIDEWALK TRANSVERSE EXPANSION JOINT
PLAN VIEW

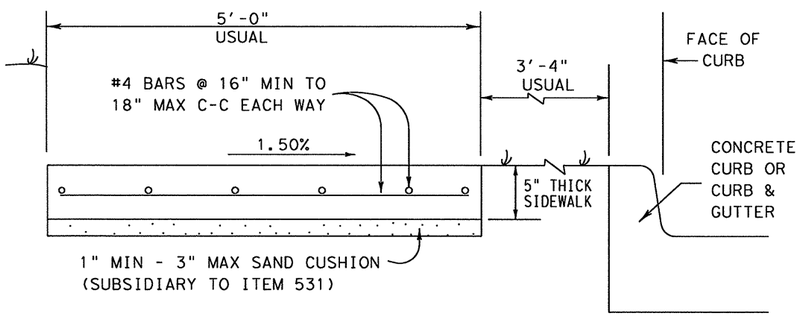

CONCRETE SIDEWALK (REMOTE FROM CURB)
STA 303+05 TO STA 305+20 SH 289 63' RT
STA 419+47.79 TO STA 419+54.04 SH 289 54.73' RT

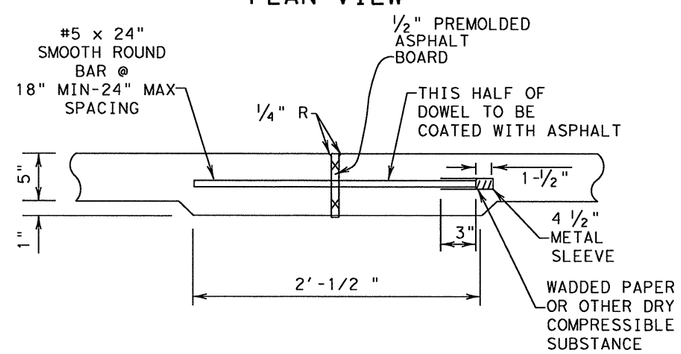

SIDEWALK TRANSVERSE EXPANSION
JOINT DETAIL

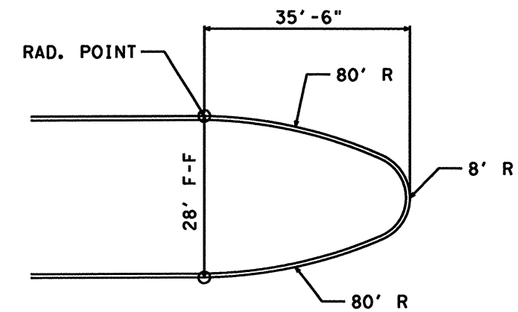

PLAN
N.T.S.

SH 289 BULLET NOSE DETAIL

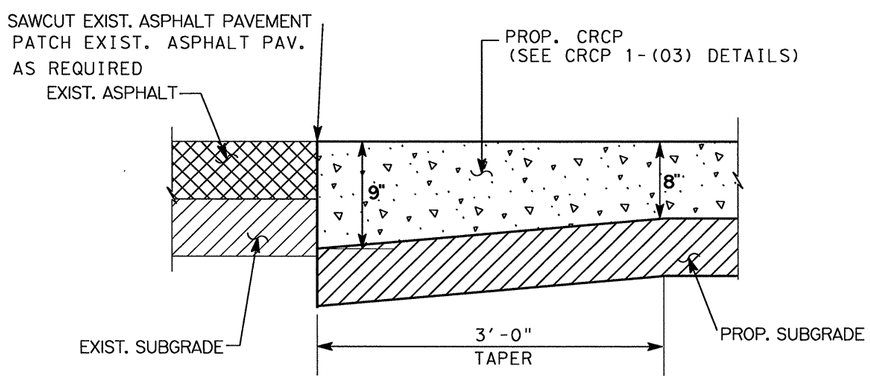

NEW CONCRETE PAVEMENT TO EXIST.
ASPHALT TRANSITION DETAIL

TO BE USED WHERE PROPOSED CONCRETE PAVEMENT
MEETS EXISTING/TRANSITION ASPHALT PAVEMENT.

STATE OF TEXAS
NICHOLAS VON SPENCER
93702
LICENSED
PROFESSIONAL ENGINEER

Nicholas Von Spencer, P.E. 4-7-11
Signature of Registrant & Date

Texas Department of Transportation
© 2011

MISCELLANEOUS
ROADWAYS
DETAILS

NO SCALE SHEET 1 OF 2

DESIGN	FED. RD. DIV. NO.	FEDERAL AID PROJECT NO.		HIGHWAY NO.
AMW	6	(SEE TITLE SHEET)		SH 289
GRAPHICS	STATE	DISTRICT	COUNTY	SHEET NO.
AMW	TEXAS	DALLAS	COLLIN	200
CHECK	CONTROL	SECTION	JOB	
NVS	0091	04	055	
CHECK NVS				

T:\DALDGN*A\SH 289 Celina\THE PLANS\Miscellaneous Details\SH289*MiscDetails.dgn 4/7/2011

R-201104-01

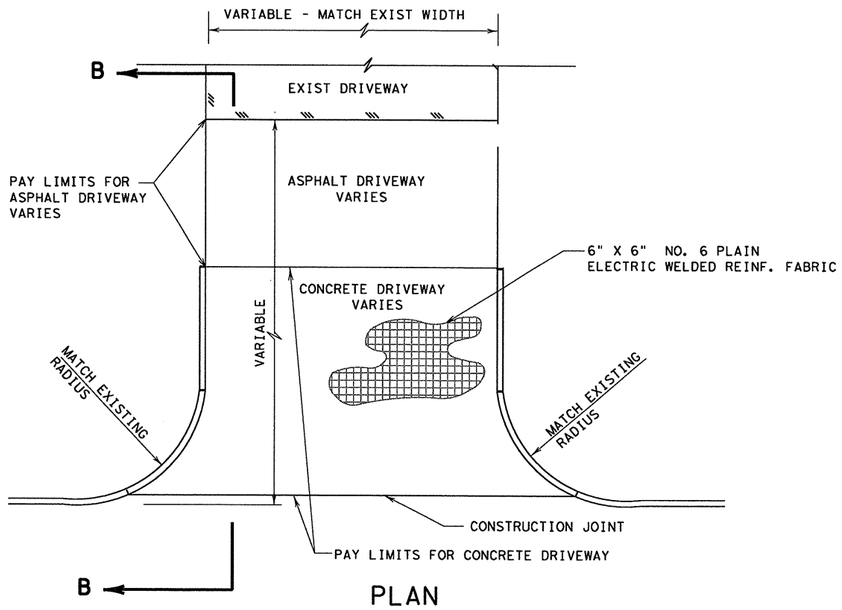

PLAN

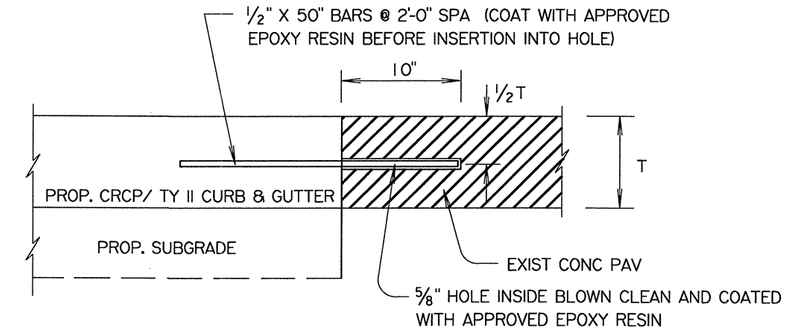

ANCHOR JOINT DETAIL

TO BE USED WHERE PROPOSED CONCRETE PAVEMENT MEETS EXISTING CONCRETE PAVEMENT.

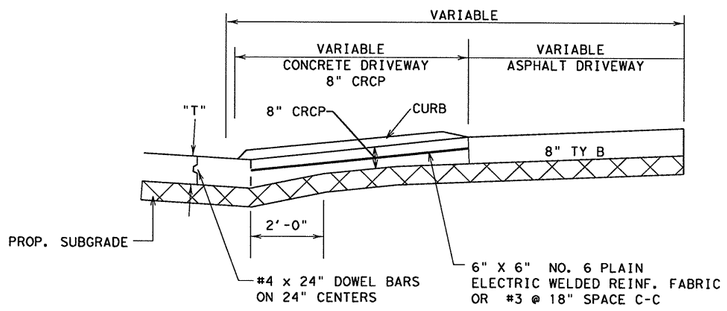

SECTION B-B

DRIVEWAY

NOTE: SEE ROADWAY SUMMARIES AND DRIVEWAY PLAN & PROFILES FOR LOCATIONS AND LIMITS.

OMIT PAYMENT FOR CURB WITHIN LIMITS OF DRIVEWAY. CURBS SHALL BE TAPERED.

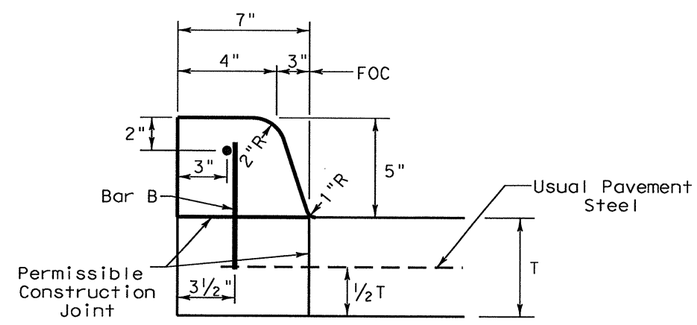

TYPE II CURB (MONOLITHIC)
5" HEIGHT

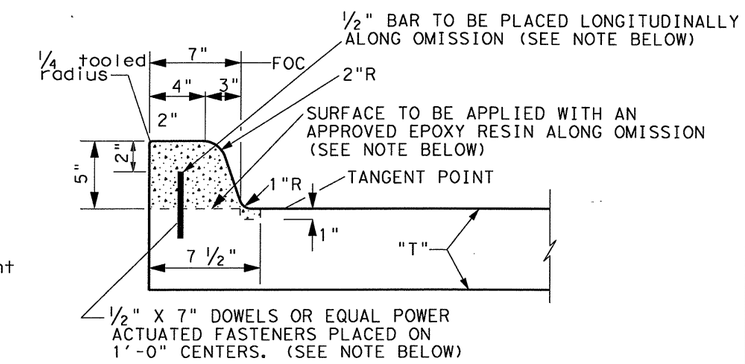

NOTE:
IF CONTINUOUS MONOLITHIC CURB HAS TO BE OMMITTED FOR ANY REASON, THE CURB SHALL BE DOWELED AS SHOWN ABOVE.

TYPE II CURB (DOWEL)

STATE OF TEXAS
NICHOLAS VON SPENCER
93702
LICENSED PROFESSIONAL ENGINEER

Signature of Registrant, P.E. & Date 5-25-11

Texas Department of Transportation
© 2011

MISCELLANEOUS ROADWAY DETAILS

NO SCALE — SHEET 2 OF 2

DESIGN	FED. RD. DIV. NO.	FEDERAL AID PROJECT NO.		HIGHWAY NO.
AMW	6	(SEE TITLE SHEET)		SH 289
GRAPHICS AMW	STATE	DISTRICT	COUNTY	SHEET NO.
CHECK NVS	TEXAS	DALLAS	COLLIN	201
CHECK NVS	CONTROL	SECTION	JOB	
	0091	04	055	

T:\DALDGN*A\SH 289 Celina\THE PLANS\Miscellaneous Details\SH289*MiscDetails.dgn 5/25/2011

R-201104-01

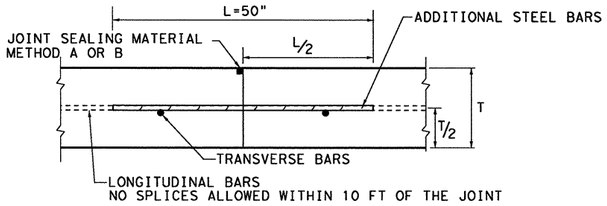

TRANSVERSE CONSTRUCTION JOINT
SECTION X - X

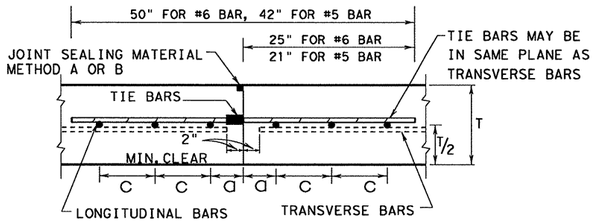

LONGITUDINAL CONSTRUCTION JOINT
SECTION Y - Y

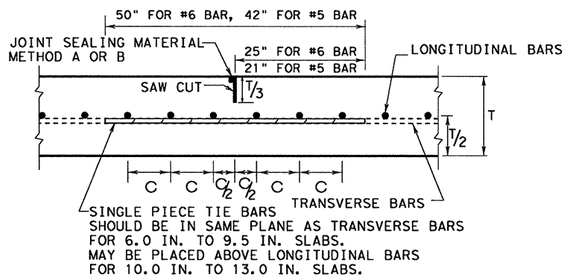

LONGITUDINAL CONTRACTION JOINT
SECTION Z - Z

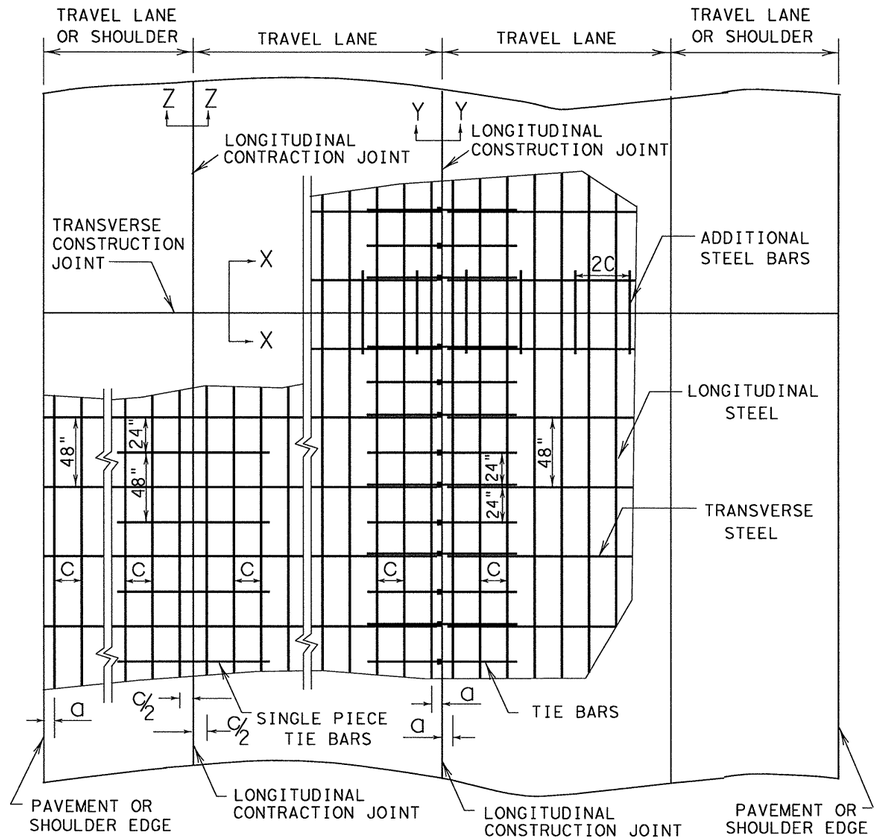

TYPICAL PAVEMENT LAYOUT

PLAN VIEW (NOT TO SCALE)

GENERAL NOTES

1. DETAILS FOR PAVEMENT WIDTH, PAVEMENT THICKNESS AND THE CROWN CROSS-SLOPE SHALL BE SHOWN ELSEWHERE IN THE PLANS. PAVEMENTS WIDER THAN 100 FT. WITHOUT A FREE LONGITUDINAL JOINT, ARE NOT COVERED BY THIS STANDARD.
2. THE DETAIL FOR THE JOINT SEALANT AND RESERVOIR IS SHOWN ON STANDARD SHEET "CONCRETE PAVING DETAILS, JOINT SEALS."
3. ALL THE REINFORCING STEEL AND TIE BARS SHALL BE DEFORMED STEEL BARS CONFORMING TO ASTM A 615 (GRADE 60) OR ASTM A 996 (GRADE 60). STEEL BAR SIZES SHALL CONFORM TO TABLE NO. 1 & 2.
4. STEEL BAR PLACEMENT TOLERANCE SHALL BE +/- 1 IN. HORIZONTALLY AND +/- 0.5 IN. VERTICALLY. CALCULATED AVERAGE BAR SPACING (CONCRETE PLACEMENT WIDTH / NUMBER OF LONGITUDINAL BARS) SHALL CONFORM TO TABLE NO.1 AND AS SPECIFIED.
5. PAVEMENT WIDTHS OF MORE THAN 15 FT. SHALL HAVE A LONGITUDINAL JOINT (SECTION Z-Z OR SECTION Y-Y). THESE JOINTS SHALL BE LOCATED WITHIN 6 IN. OF THE LANE LINE UNLESS THE JOINT LOCATION IS SHOWN ELSEWHERE ON THE PLANS.
6. THE SAW CUT DEPTH FOR THE LONGITUDINAL CONTRACTION JOINT SHALL BE ONE THIRD OF THE SLAB THICKNESS.
7. WHEN APPROVED BY THE ENGINEER, SINGLE PIECE TIE BARS MAY BE USED BY INSERTING INTO PLASTIC CONCRETE AT LONGITUDINAL CONSTRUCTION JOINTS.
8. WHEN TYING CONCRETE GUTTER AT A LONGITUDINAL JOINT, THE TIE BAR LENGTH OR POSITION MAY BE ADJUSTED. PROVIDE 3 IN. OF CONCRETE COVER FROM THE BACK OF GUTTER TO THE END OF TIE BAR.
9. MISSING OR DAMAGED TIE BARS SHALL BE REPLACED BY DRILLING AND EPOXY GROUTING AT THE CONTRACTOR'S EXPENSE.
10. OMIT TIE BARS LOCATED WITHIN 18 IN. OF THE TRANSVERSE CONSTRUCTION JOINTS. USE HAND-OPERATED IMMERSION VIBRATORS TO CONSOLIDATE THE CONCRETE ADJACENT TO ALL FORMED JOINTS.
11. OBTAIN THE ENGINEER'S WRITTEN APPROVAL, IF THE CONCRETE MIX DESIGN USES MORE THAN 5.5 SACKS/CY.

TABLE NO. 2 TRANSVERSE STEEL AND TIE BARS

SLAB THICKNESS (IN.)	TRANSVERSE STEEL		TIE BARS AT LONGITUDINAL CONTRACTION JOINT		TIE BARS AT LONGITUDINAL CONSTRUCTION JOINT	
	BAR SIZE	SPACING (IN.)	BAR SIZE	SPACING (IN.)	BAR SIZE	SPACING (IN.)
6.0 - 7.5	#5	48	#5	48	#5	24
8.0 - 13.0	#5	48	#6	48	#6	24

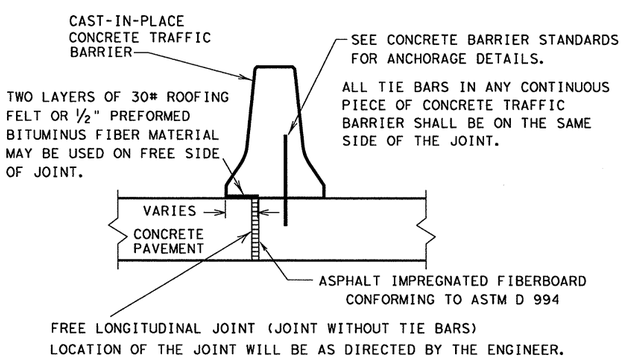

FREE LONGITUDINAL JOINT DETAIL

TABLE NO. 1 LONGITUDINAL STEEL

SLAB THICKNESS AND BAR SIZE		REGULAR STEEL BARS	FIRST SPACING AT EDGE OR JOINT	ADDITIONAL STEEL BARS AT TRANSVERSE CONSTRUCTION JOINT	
T (IN.)	BAR SIZE	SPACING c (IN.)	SPACING a (IN.)	SPACING 2 x c (IN.)	LENGTH L (IN.)
6.0	#5	7.5	3 TO 4	15	50
6.5	#5	7.0	3 TO 4	14	50
7.0	#5	6.5	3 TO 4	13	50
7.5	#5	6.0	3 TO 4	12	50
8.0	#6	9.0	3 TO 4	18	50
8.5	#6	8.5	3 TO 4	17	50
9.0	#6	8.0	3 TO 4	16	50
9.5	#6	7.5	3 TO 4	15	50

TABLE NO. 1 LONGITUDINAL STEEL (Cont.)

SLAB THICKNESS AND BAR SIZE		REGULAR STEEL BARS	FIRST SPACING AT EDGE OR JOINT	ADDITIONAL STEEL BARS AT TRANSVERSE CONSTRUCTION JOINT	
T (IN.)	BAR SIZE	SPACING c (IN.)	SPACING a (IN.)	SPACING 2 x c (IN.)	LENGTH L (IN.)
10.0	#6	7.0	3 TO 4	14	50
10.5	#6	6.75	3 TO 4	13.5	50
11.0	#6	6.5	3 TO 4	13	50
11.5	#6	6.25	3 TO 4	12.5	50
12.0	#6	6.0	3 TO 4	12	50
12.5	#6	5.75	3 TO 4	11.5	50
13.0	#6	5.5	3 TO 4	11	50

Texas Department of Transportation
Design Division Standard

CONTINUOUSLY REINFORCED CONCRETE PAVEMENT

ONE LAYER STEEL BAR PLACEMENT T - 6 to 13 INCHES

CRCP (1) -09

FILE: crcp109.dgn	DN: TxDOT	CK: LL	DW: HC	CK:
© TxDOT November 2009	CONT	SECT	JOB	HIGHWAY
REVISIONS	0091	04	055	SH 289
	DIST		COUNTY	SHEET NO.
	18		COLLIN	202

DISCLAIMER:
The use of this standard is governed by the "Texas Engineering Practice Act". No warranty of any kind is made by TxDOT for any purpose whatsoever. TxDOT assumes no responsibility for the conversion of this standard to other formats or for incorrect results or damages resulting from its use.

DATE:
FILE:

R-201104-01

DISCLAIMER:
The use of this standard is governed by the "Texas Engineering Practice Act". No warranty of any kind is made by TxDOT for any purpose whatsoever. TxDOT assumes no responsibility for the conversion of this standard to other formats or for incorrect results or damages resulting from its use.

TYPE 1

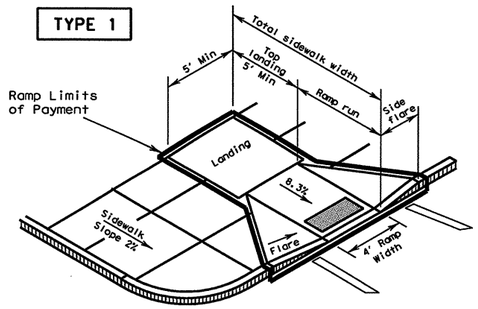

PERPENDICULAR CURB RAMP

TYPE 2

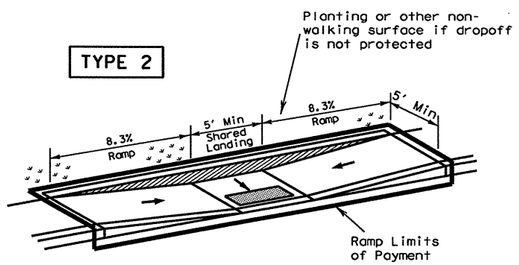

PARALLEL CURB RAMP
(Use only where water will not pond in the landing.)

TYPE 4

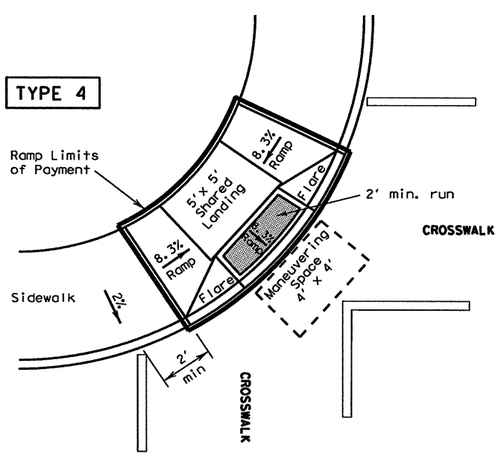

DIAGONAL COMBINATION CURB RAMP
Perpendicular to the Tangent of the Curb Radius and Contained in Crosswalk

TYPE 7

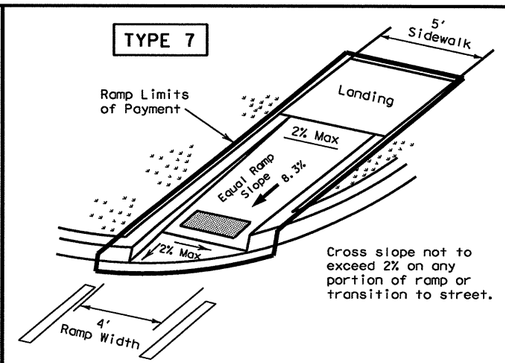

DIRECTIONAL RAMP WITHIN RADIUS
(Sidewalk set back from curb)

TYPE 8

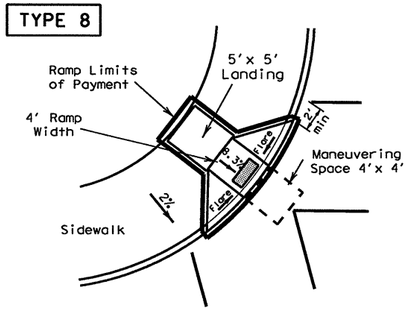

DIAGONAL CURB RAMP (FLARED SIDES)

TYPE 5

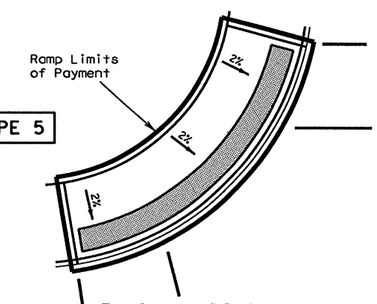

FLUSH LANDING

TYPE 9

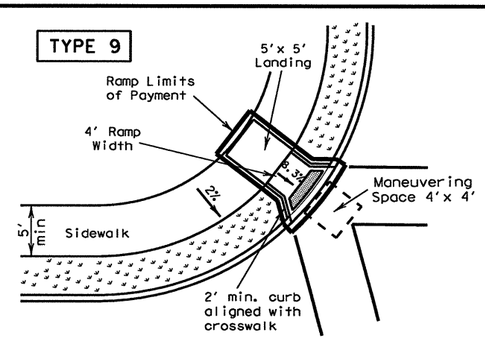

DIAGONAL CURB RAMP (RETURNED CURB)

TYPE 20

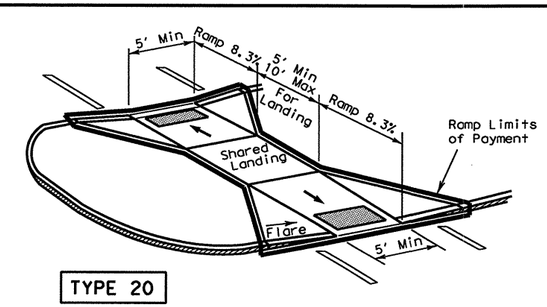

TYPE 21

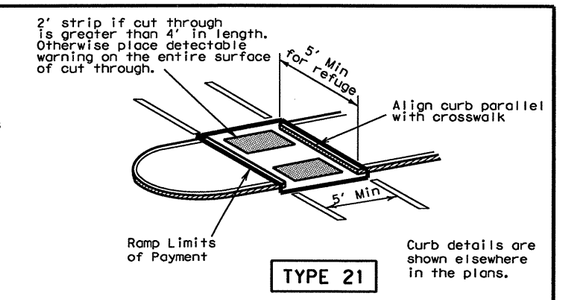

CURB RAMPS AT MEDIAN ISLANDS

TYPE 3

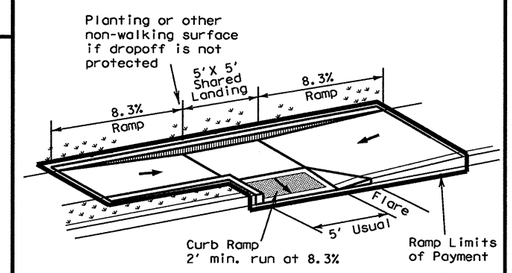

TYPE 6

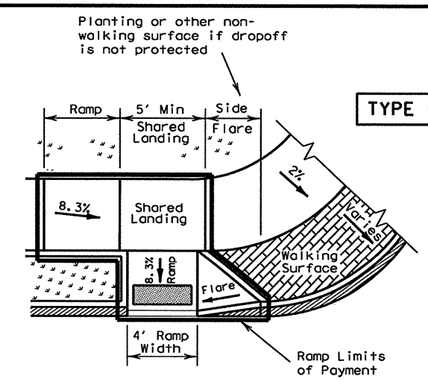

COMBINATION CURB RAMPS

TYPE 22

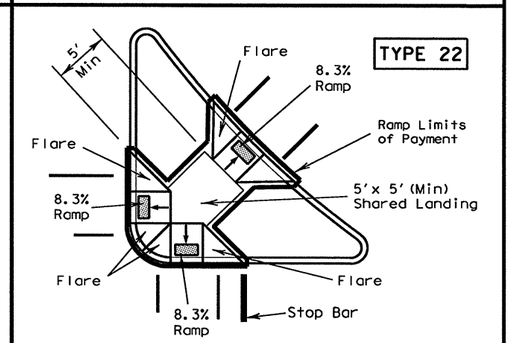

COMBINATION ISLAND RAMPS

TYPE 10

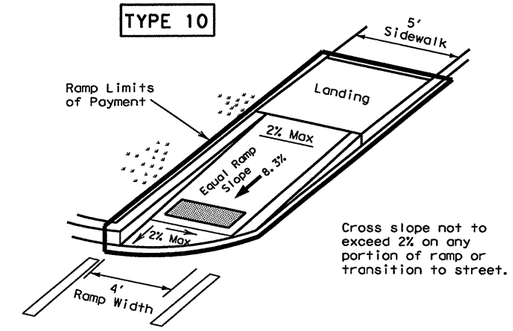

DIRECTIONAL RAMP WITHIN RADIUS
(Sidewalk adjacent to curb)

TYPE 11

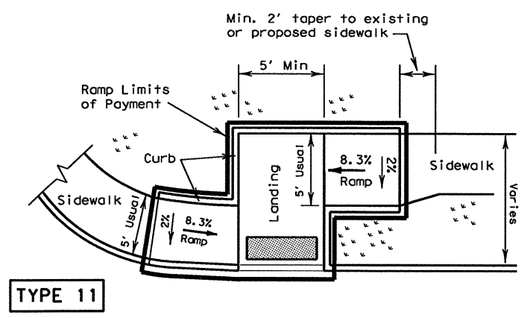

OFFSET PARALLEL CURB RAMP

NOTES:
See General Notes on sheet 2 of 4 for more information.

"" Denotes planting or non-walking surface.

SHEET 1 OF 4

Texas Department of Transportation
Design Division Standard

PEDESTRIAN FACILITIES
CURB RAMPS

PED-05

FILE: ped05.dgn	DN: TxDOT	CK: EH	DW: BD	CK:
© TxDOT March 2002	CONT	SECT	JOB	HIGHWAY
REVISIONS	0091	04	055	SH 289
	DIST		COUNTY	SHEET NO.
	18		COLLIN	204

DATE:
FILE:

R-201104-01

DISCLAIMER:
The use of this standard is governed by the "Texas Engineering Practice Act". No warranty of any kind is made by TxDOT for any purpose whatsoever. TxDOT assumes no responsibility for the conversion of this standard to other formats or for incorrect results or damages resulting from its use.

DETECTABLE WARNINGS

General Notes for Detectable Warnings

1. Curb ramps must contain a detectable warning surface that consists of raised truncated domes complying with Section 4.29 of the Texas Accessibility Standards (TAS). The surface must contrast visually with adjoining surfaces, including side flares. Furnish dark brown or dark red detectable warning surface adjacent to uncolored concrete, unless specified elsewhere in the plans.
2. Detectable warning surfaces must be slip resistant and not allow water to accumulate.
3. Align truncated domes in the direction of pedestrian travel when entering the street.
4. Shaded areas on Sheet 1 of 4 indicate the approximate location for the detectable warning surface for each curb ramp type.
5. Detectable warning surfaces shall be a minimum of 24" in depth in the direction of pedestrian travel, and extend the full width of the curb ramp or landing where the pedestrian access route enters the street.
6. Detectable warning surfaces shall be located so that the edge nearest the curb line is a minimum of 6" and a maximum of 10" from the extension of the face of curb. Detectable warning surfaces may be curved along the corner radius.
7. TxDOT maintains a list of Qualified Detectable Warning Materials. Details are provided herein for the placement of landscape pavers. For other materials, refer to the manufacturer's product manual for proper installation.

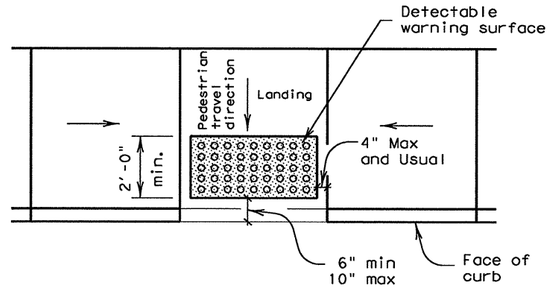

Typical placement of detectable warning surface on landing at street edge.

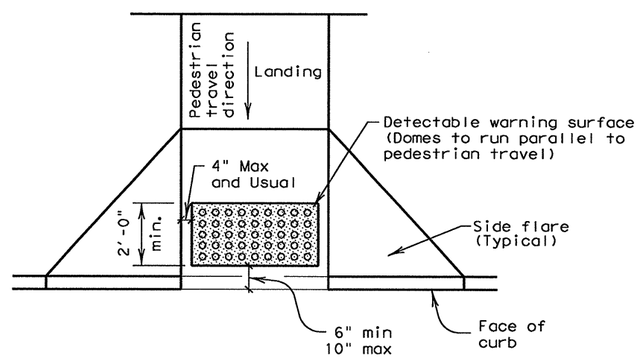

Typical placement of detectable warning surface on sloping ramp run.

Pedestrian Facilities General Notes

1. All slopes are maximum allowable. The least possible slope that will still drain properly should be used. Adjust curb ramp length or grade of approach sidewalks as directed.
2. The minimum sidewalk width is 5'. Where the sidewalk is adjacent to the back of curb, a 6' sidewalk width is encouraged. Where a 5' sidewalk can not be provided due to site constraints, a minimum 3' sidewalk with 5'x 5' passing areas at intervals not to exceed 200' is required.
3. Landings shall be 5'x 5' minimum with a maximum 2% slope in any direction.
4. Maneuvering space at the bottom of curb ramps shall be a minimum of 4'x 4' wholly contained within the crosswalk and wholly outside the parallel vehicular travel path.
5. Maximum allowable cross slope on sidewalk and curb ramp surfaces is 2%.
6. Curb ramps with returned curbs may be used only where pedestrians would not normally walk across the ramp, either because the adjacent surface is planting or other non-walking surface or because the side approach is substantially obstructed. Otherwise, provide flared sides.
7. Additional information on curb ramp location, design, light reflective value and texture may be found in the current edition of the Texas Accessibility Standards (TAS) and 16 TAC §68.102.
8. To serve as a pedestrian refuge area, the median should be a minimum of 5' wide. Medians should be designed to provide accessible passage over or through them.
9. Small channelization islands, which do not provide a minimum 5'x 5' landing at the top of curb ramps, shall be cut through level with the surface of the street.
10. Crosswalk dimensions, crosswalk markings and stop bar locations shall be as shown elsewhere in the plans. At intersections where crosswalk markings are not required, curb ramps shall be aligned with theoretical crosswalks, or as directed by the Engineer.
11. Existing features that comply with TAS may remain in place unless otherwise shown on the plans.
12. Handrails are not required on curb ramps. Provide curb ramps wherever on accessible route crosses (penetrates) a curb.
13. Curb ramps and landings shall be constructed and paid for in accordance with Item 531 "Sidewalks".
14. Separate curb ramp and landings from adjacent sidewalk and any other elements with premold or board joint of ¾" unless otherwise directed by the Engineer.
15. Provide a smooth transition where the curb ramps connect to the street.
16. Curbs shown on sheet 1 within the limits of payment are considered part of the curb ramp for payment, whether it is concrete curb, gutter, or combined curb and gutter.
17. Flare slope shall not exceed 10% measured along curb line.

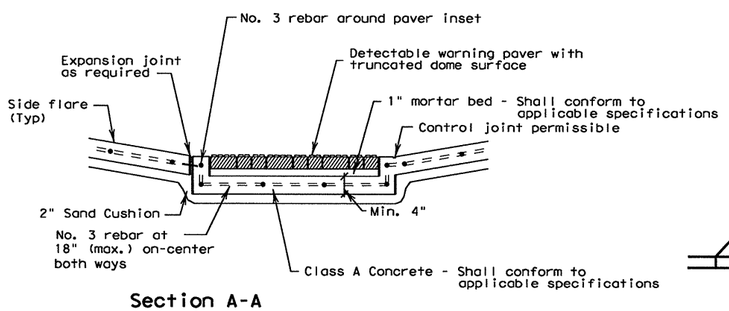

Section A-A

General Notes (Pavers)

Furnish detectable warning paver units meeting all requirements of ASTM C-936, C-33. Lay in a two by two unit basket weave pattern or as directed.

Lay full-size units first followed by closure units consisting of at least 25 percent of a full unit. Cut detectable warning paver units using a power saw.

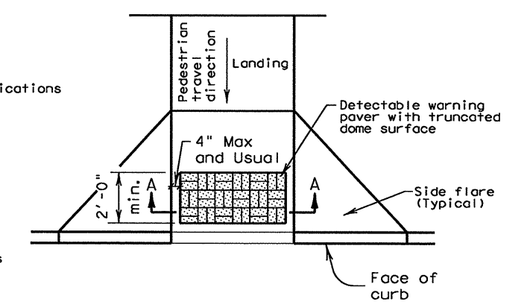

Truncated Dome Pattern Curb Ramp

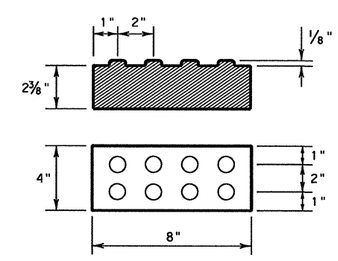

Detectable Warning Paver

DETECTABLE WARNING PAVER (OPTION)

SHEET 2 OF 4

Texas Department of Transportation
Design Division Standard

PEDESTRIAN FACILITIES

GENERAL NOTES AND DETECTABLE WARNINGS

PED-05

FILE: ped05.dgn	DN: TxDOT	CK: EH	DW: BD	CK:
© TxDOT March 2002	CONT	SECT	JOB	HIGHWAY
REVISIONS	0091	04	055	SH 289
	DIST		COUNTY	SHEET NO.
	18		COLLIN	205

DATE:
FILE:

R-201104-01

DISCLAIMER:
The use of this standard is governed by the "Texas Engineering Practice Act". No warranty of any kind is made by TxDOT for any purpose whatsoever. TxDOT assumes no responsibility for the conversion of this standard to other formats or for incorrect results or damages resulting from its use.

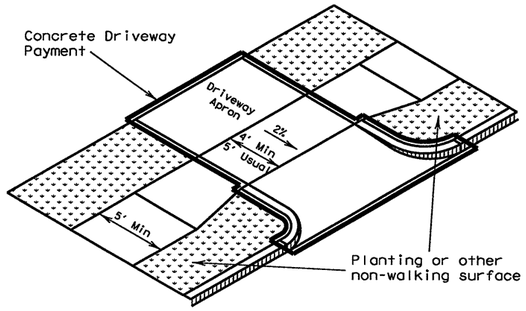

Setback sidewalk

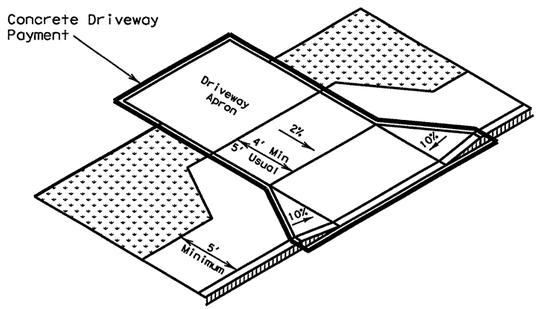

Apron offset sidewalk

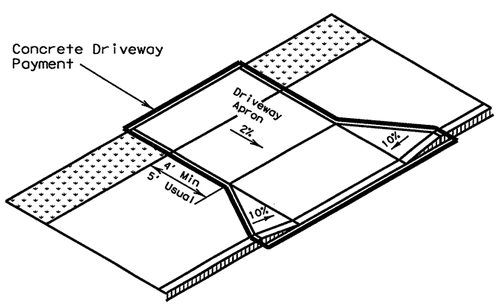

Wide sidewalk

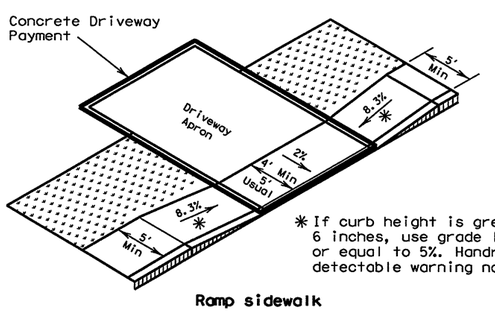

* If curb height is greater than 6 inches, use grade less than or equal to 5%. Handrail and detectable warning not required.

Ramp sidewalk

SIDEWALK TREATMENT AT DRIVEWAYS

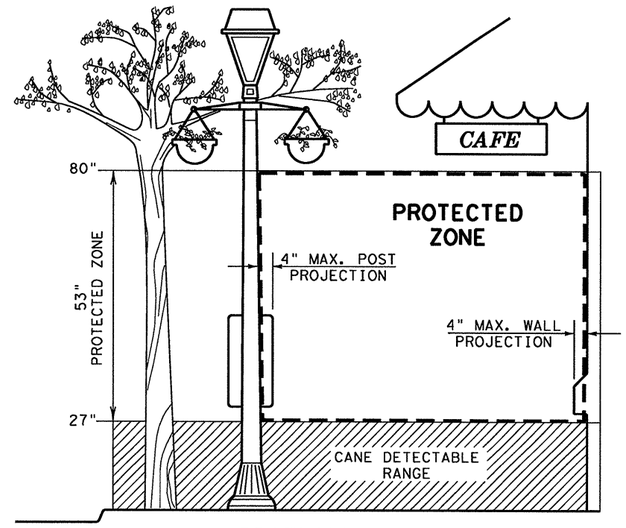

PROTECTED ZONE

In pedestrian circulation area, maximum 4" projection for post or wall mounted objects between 27"and 80" above the surface.

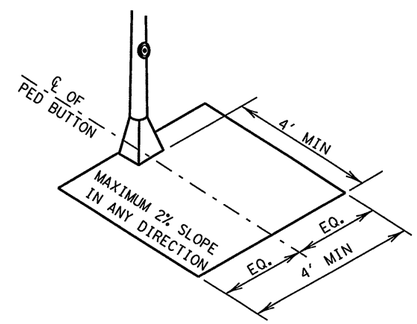

CLEAR GROUND SPACE CENTERED AT PEDESTRIAN PUSH BUTTON

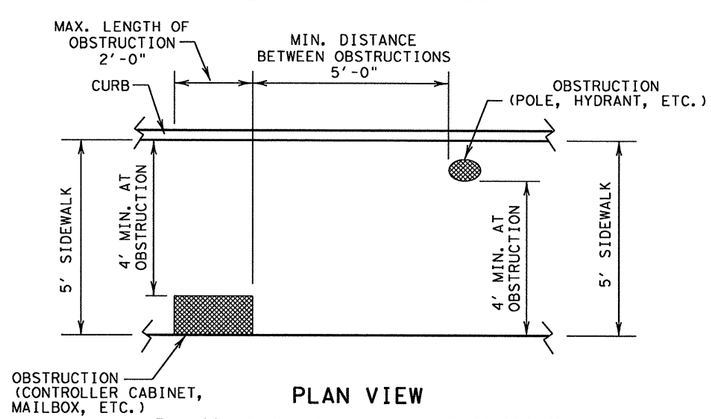

PLAN VIEW

PLACEMENT OF STREET FIXTURES

(ITEMS NOT INTENDED FOR PUBLIC USE. MINIMUM 4' x 4' CLEAR GROUND SPACE REQUIRED AT PUBLIC USE FIXTURES.)

General Notes

1. All slopes are maximum allowable. The least possible slope that will still drain properly should be used.
2. Place traffic signal or illumination poles, ground boxes, controller boxes, signs, drainage facilities and other items so as not to obstruct the accessible route or clear ground space.
3. Usual sidewalk cross slope equals 1.5%. The maximum allowable sidewalk cross slope equals 2%.
4. Street grades and cross slopes shall be as shown elsewhere in the plans.
5. Existing features that comply with TAS may remain in place unless otherwise shown on the plans.
6. Changes in level greater than ¼ inch are not permitted.
7. The least possible grade should be used to maximize accessibility. The running slope of sidewalks and crosswalks, within the public right of way, may follow the grade of the parallel roadway. Where a continuous grade greater than 5% must be provided, handrails may be desirable on one or both sides of the sidewalk to improve accessibility. Handrails may also be needed to protect pedestrians from potentially hazardous conditions. If provided, handrails must comply with TAS 4.8.5.
8. Handrail extensions shall not protrude into the usable landing area or into intersecting pedestrian routes.
9. Driveways and turnouts shall be constructed and paid for in accordance with Item, "Driveways and Turnouts". Sidewalks shall be constructed and paid for in accordance with Item, "Sidewalks".
10. Sidewalk details are shown elsewhere in the plans.

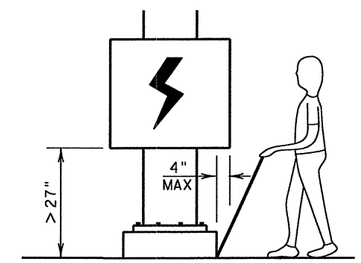

When an obstruction of a height greater than 27" from the surface would create a protrusion of more than 4" into the pedestrian circulation area, construct additional curb or foundation at the bottom to provide a maximum 4" overhang.

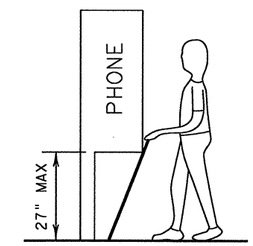

Protruding objects of a height ≤ 27" are detectable by cane and do not require additional treatment.

DETECTION BARRIER FOR VERTICAL CLEARANCE < 80"

SHEET 3 OF 4

Texas Department of Transportation
Design Division Standard

PEDESTRIAN FACILITIES
SIDEWALKS

PED-05

FILE: ped05.dgn	DN: TxDOT	CK: EH	DW: BD	CK:
©TxDOT March 2002	CONT	SECT	JOB	HIGHWAY
REVISIONS	0091	04	055	SH 289
	DIST		COUNTY	SHEET NO.
	18		COLLIN	206

DATE:
FILE:

R-201104-01

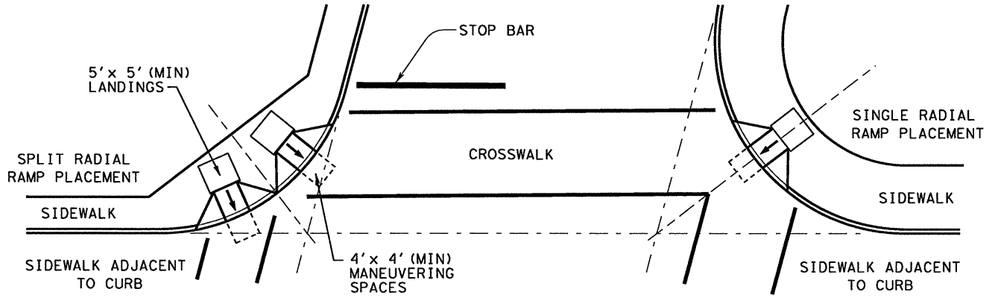

SKEWED INTERSECTION WITH "LARGE" RADIUS

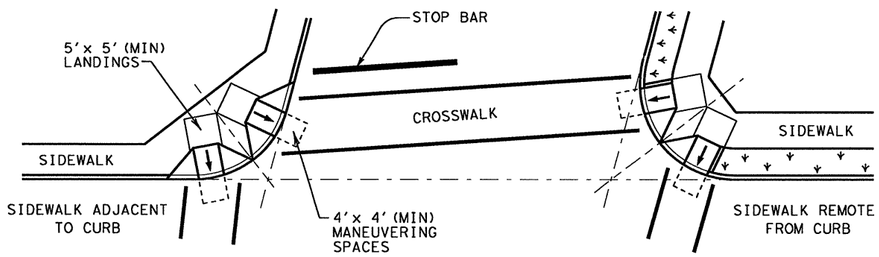

SKEWED INTERSECTION WITH "SMALL" RADIUS

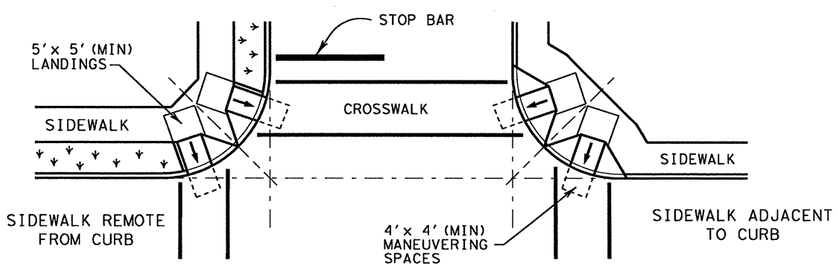

NORMAL INTERSECTION WITH "SMALL" RADIUS

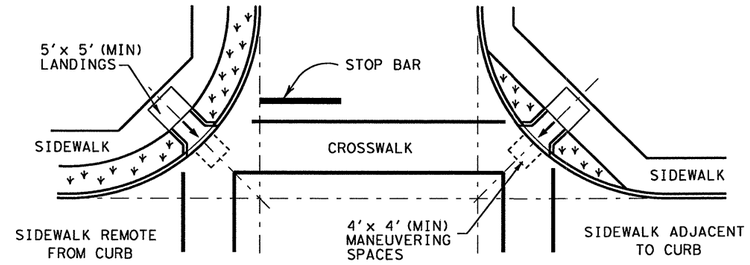

NORMAL INTERSECTION WITH "LARGE" RADIUS

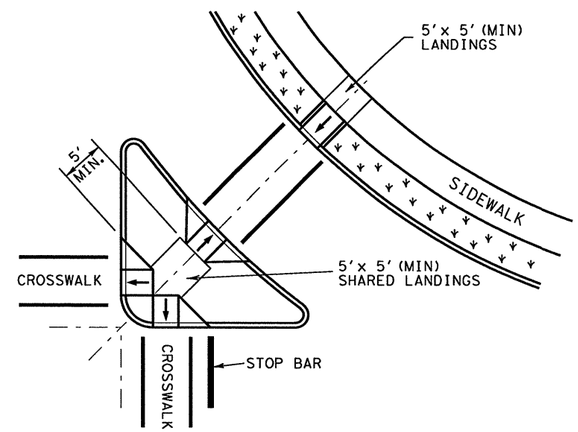

AT INTERSECTION
W/FREE RIGHT TURN & ISLAND

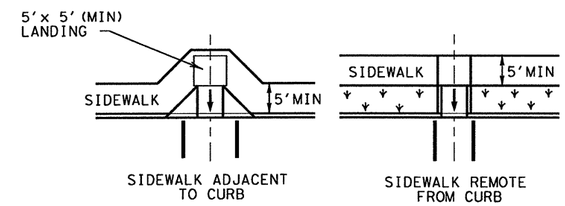

MID-BLOCK PLACEMENT
PERPENDICULAR RAMPS

General Notes

1. Street grades and cross slopes shall be as shown elsewhere in the plans.
2. Ramps are shown here without detectable warnings for simplicity. Detectable warnings are required at the locations shown on the PED Standard (Sheets 1 and 2 of 4) and in accordance with the details shown below.
3. Small channelization islands, which can not provide a minimum 5' x 5' landing at the top of ramps, shall be cut through level with the surface of the street.

TYPICAL CROSSING LAYOUTS

SEE SHEET 1 OF 4 FOR DETAILS AND DIMENSIONS

Texas Department of Transportation
Design Division Standard

PEDESTRIAN FACILITIES

INTERSECTION LAYOUTS

PED-05

FILE: ped05.dgn	DN: TxDOT	CK: EH	DW: BD	CK:	
© TxDOT March 2002	CONT	SECT	JOB	HIGHWAY	
REVISIONS	0091	04	055	SH 289	
	DIST		COUNTY		SHEET NO.
	18		COLLIN		207

DISCLAIMER:
The use of this standard is governed by the "Texas Engineering Practice Act". No warranty of any kind is made by TxDOT for any purpose whatsoever. TxDOT assumes no responsibility for the conversion of this standard to other formats or for incorrect results or damages resulting from its use.

DATE:
FILE:

DISCLAIMER:
The use of this standard is governed by the "Texas Engineering Practice Act". No warranty of any kind is made by TxDOT for any purpose whatsoever. TxDOT assumes no responsibility for the conversion of this standard to other formats or for incorrect results or damages resulting from its use.

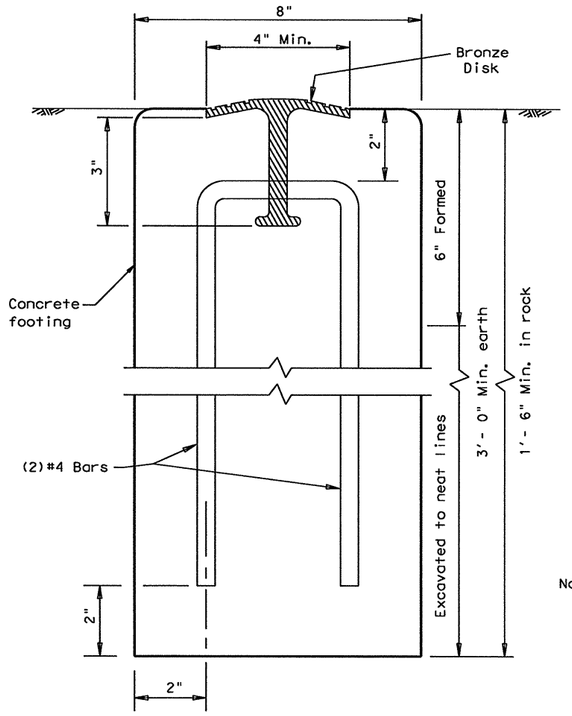

SECTION A-A

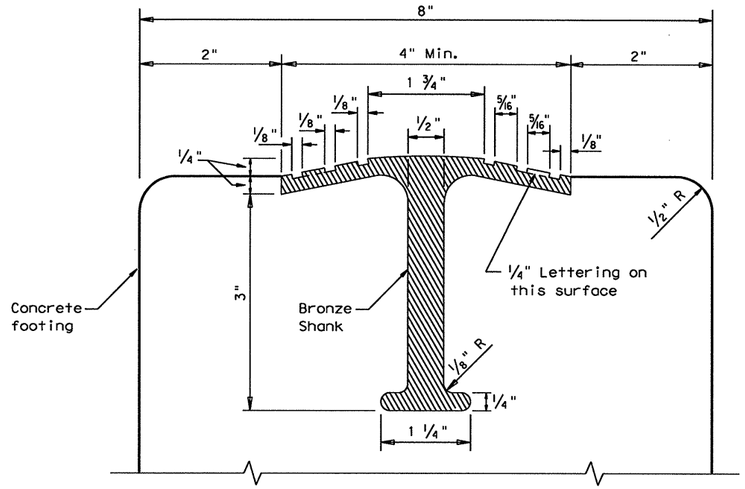

SECTION THRU TOP OF ROW MARKER

Note:
Measurement of grooves on face of disk may vary slightly. Top surface may be arched.

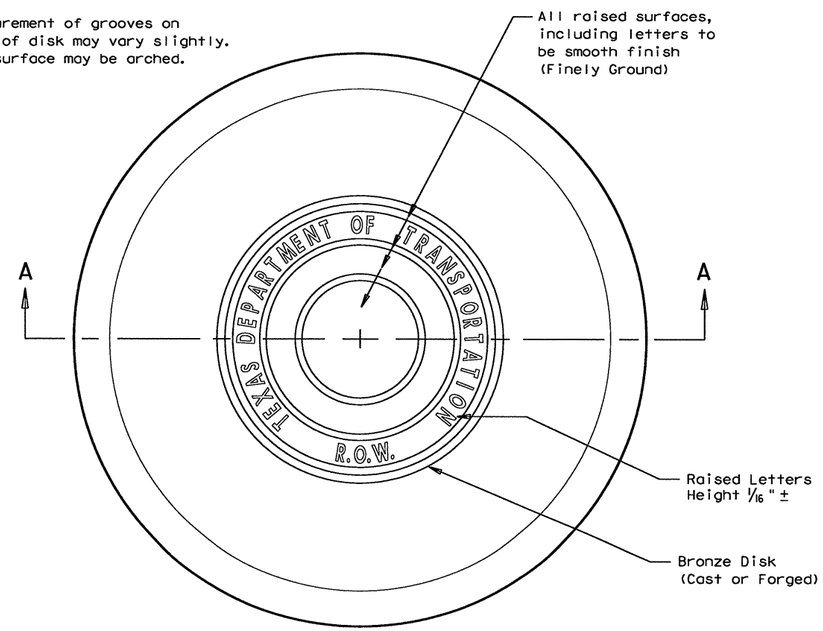

TOP VIEW OF ROW MARKER

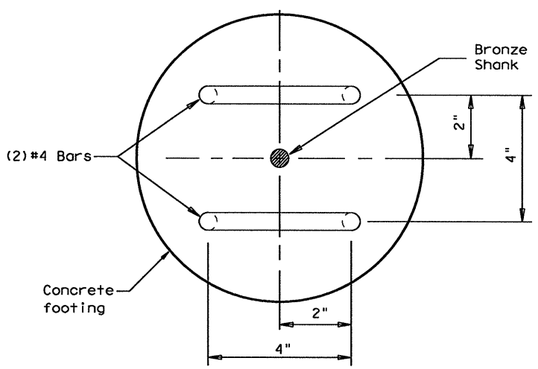

CROSS SECTION THRU MARKER

GENERAL NOTES

1. All materials and construction shall be in accordance with Item 538, "Right of way markers."
2. Right-of-Way marker concrete shall be poured in place. The bronze disks shall be set to the correct line and grade, as directed by the Engineer.
3. The bronze disk shall be of architectural bronze with the following composition: Copper 85%, Tin 5%, Lead 5%, Zinc 5%. Excavation of the marker locations shall be made of uniform lines except for the top of 6 inches which shall be formed with removable forms. The top part of the marker around the bronze disk shall receive a trowel finish.
4. Once the concrete has set, the Engineer will stencil the required survey data and, with a chisel or center punch, cut across marker the exact location of the Right-of-Way line in the bronze disk.

Texas Department of Transportation
Design Division Standard

RIGHT-OF-WAY MARKER

M-10

FILE: m10.dgn	DN: TxDOT	CK: AM	DW: BD/VP	CK: VP	
© TxDOT February 1992	CONT	SECT	JOB	HIGHWAY	
REVISIONS	0091	04	055	SH 289	
	DIST	COUNTY		SHEET NO.	
	18	COLLIN		208	

DATE:
FILE:

R-201104-01

DISCLAIMER:
The use of this standard is governed by the "Texas Engineering Practice Act". No warranty of any kind is made by TxDOT for any purpose whatsoever. TxDOT assumes no responsibility for the conversion of this standard to other formats or for incorrect results or damages resulting from its use.

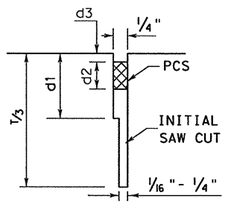

SAWED
LONGITUDINAL JOINT

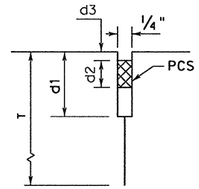

LONGITUDINAL
CONSTRUCTION JOINT

LONGITUDINAL JOINT SEALS

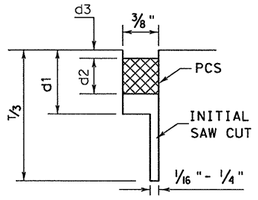

SAWED
CONTRACTION JOINT

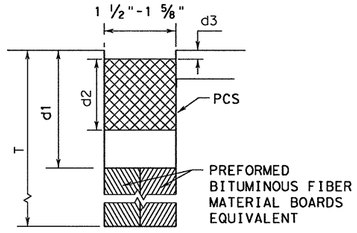

FORMED
FORMED EXPANSION JOINT

TRANSVERSE JOINT SEALS

METHOD A: PREFORMED COMPRESSION SEALS (PCS)
(CLASS 6 PREFORMED JOINT SEALANT)

GENERAL NOTES FOR METHOD "A"

1. UNLESS OTHERWISE SHOWN IN THE PLANS, EITHER METHOD "A" OR METHOD "B" MAY BE USED.
2. THE LOCATION OF JOINTS SHALL BE AS SHOWN ELSEWHERE IN THE PLANS.
3. DIMENSIONS d1, d2, AND d3 SHALL BE IN ACCORDANCE WITH THE PREFORMED COMPRESSION SEAL MANUFACTURES RECOMMENDATION.
4. THE JOINT RESERVOIR FOR SEALANT SHALL BE SAWED UNLESS OTHERWISE SHOWN ON THE PLANS FOR THE LONGITUDINAL AND TRANSVERSE CONSTRUCTION AND THE TWO SAWED JOINTS.
5. THE JOINTS SHALL BE CLEANED IN ACCORDANCE WITH THE ITEM 438 AND PRIOR TO BEGINNING OPERATIONS, THE CONTRACTOR SHALL SUBMIT A STATEMENT FROM THE SEALANT MANUFACTURER SHOWING THE RECOMMENDED EQUIPMENT AND INSTALLATION PROCEDURES TO BE USED.
6. THE SAW CUT FOR THE LONGITUDINAL JOINT SHALL BE ONE FOURTH THE SLAB THICKNESS WHEN CRUSHED LIMESTONE IS USED AS THE COARSE AGGREGATE.

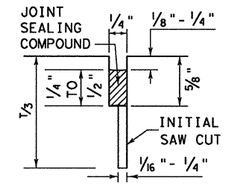

SAWED
LONGITUDINAL JOINT

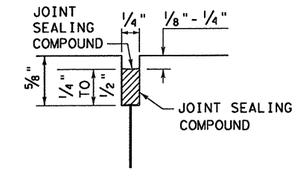

LONGITUDINAL OR TRANSVERSE
CONSTRUCTION JOINT

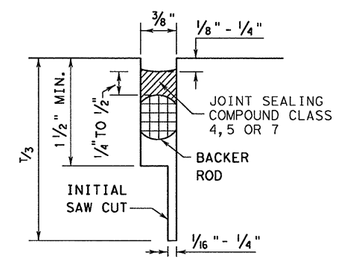

TRANSVERSE SAWED
CONTRACTION JOINT

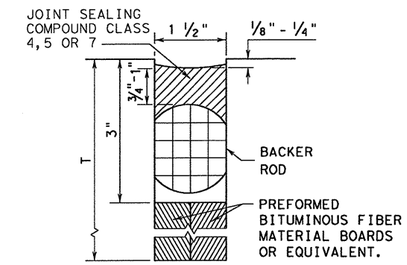

TRANSVERSE FORMED
EXPANSION JOINT

METHOD B: JOINT SEALING COMPOUND

GENERAL NOTES FOR METHOD "B"

1. UNLESS OTHERWISE SHOWN IN THE PLANS, EITHER METHOD "A" OR METHOD "B" MAY BE USED.
2. THE LOCATION OF JOINTS SHALL BE AS SHOWN ELSEWHERE IN THE PLANS.
3. THE ENGINEER SHALL SELECT A TARGET PLACEMENT THICKNESS FOR THE SEALANT DETAILS WHICH SHOW RANGES IN THICKNESS. THE TARGET THICKNESS WILL NORMALLY BE THE MIDPOINT OF THE RANGE.
4. THE JOINT RESERVOIR FOR SEALANT SHALL BE SAWED UNLESS OTHERWISE SHOWN ON THE PLANS FOR THE LONGITUDINAL AND TRANSVERSE CONSTRUCTION AND THE TWO SAWED JOINTS.
5. THE JOINTS SHALL BE CLEANED IN ACCORDANCE WITH THE ITEM 438 AND PRIOR TO BEGINNING OPERATIONS, THE CONTRACTOR SHALL SUBMIT A STATEMENT FROM THE SEALANT MANUFACTURER SHOWING THE RECOMMENDED EQUIPMENT AND INSTALLATION PROCEDURES TO BE USED.
6. THE SAW CUT FOR THE LONGITUDINAL JOINT SHALL BE ONE FOURTH THE SLAB THICKNESS WHEN CRUSHED LIMESTONE IS USED AS THE COARSE AGGREGATE.

Texas Department of Transportation
Design Division Standard

CONCRETE PAVING DETAILS
JOINT SEALS

JS-94

FILE: js94.dgn	DN: TxDOT	CK: LJB	DW: BD		CK: GLG
©TxDOT September 1994	CONT	SECT	JOB	HIGHWAY	
REVISIONS	0091	04	055	SH 289	
	DIST	COUNTY		SHEET NO.	
	18	COLLIN		209	

DATE:
FILE:

R-201104-01

DISCLAIMER:
The use of this standard is governed by the "Texas Engineering Practice Act". No warranty of any kind is made by TxDOT for any purpose whatsoever. TxDOT assumes no responsibility for the conversion of this standard to other formats or for incorrect results or damages resulting from its use.

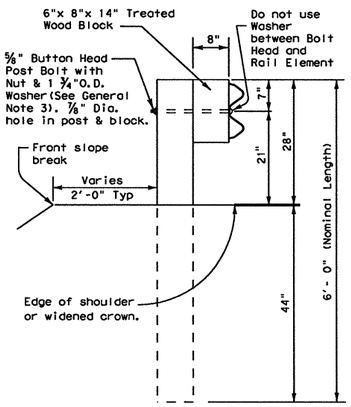

TYPICAL POST

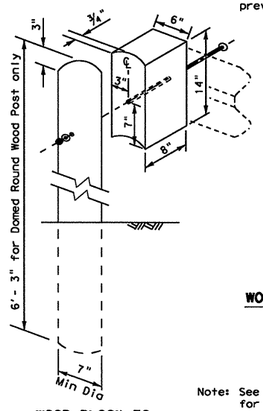

WOOD BLOCK TO ROUND WOOD POST

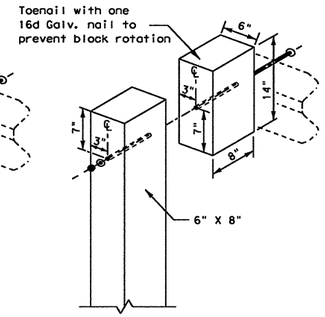

WOOD BLOCK TO RECTANGULAR WOOD POST

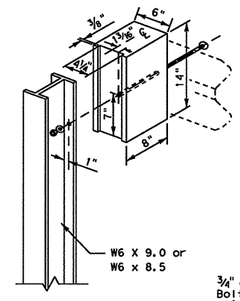

WOOD BLOCK TO STEEL POST

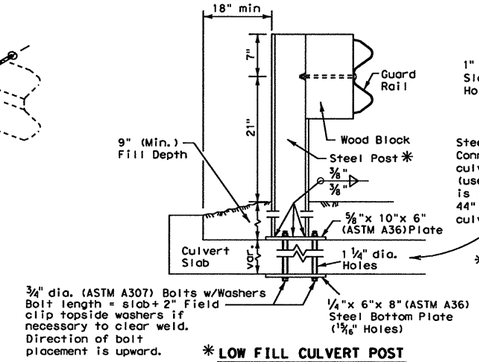

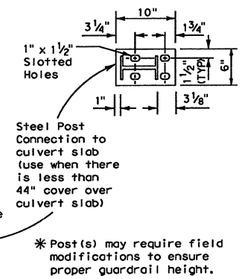

✱ LOW FILL CULVERT POST

FOR USE ON NON-BRIDGE CLASS CULVERTS ONLY

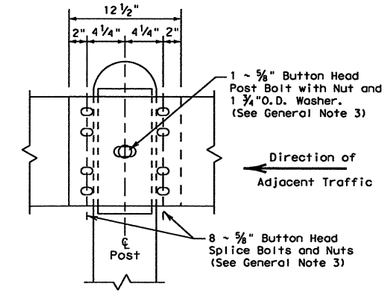

RAIL SPLICE DETAIL

Note: See Rail Splice Detail for the required hardware.

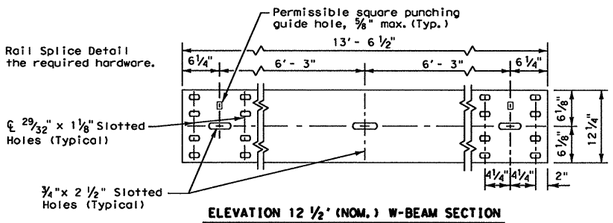

ELEVATION 12 1/2' (NOM.) W-BEAM SECTION

25 foot sections may also be supplied (See General Note 2)

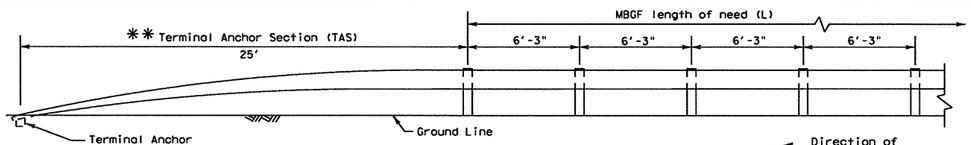

✱✱ TERMINAL ANCHOR SECTION (TAS)

Terminal anchor sections are only for downstream use, when located outside the horizontal clearance area of opposing traffic.

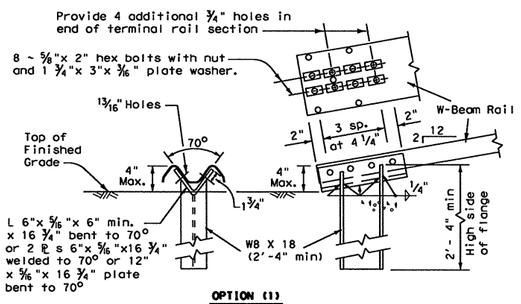

OPTION (1)

Note: This anchor post requires four additional 3/4" holes (shop or field) in the rail member with eight 5/8" hex bolts with nut and plate washer.

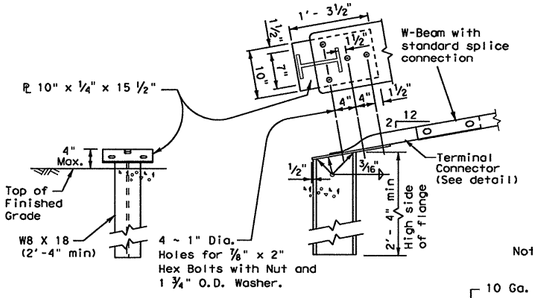

OPTION (2)

Note: This anchor post requires the use of the 10 ga. terminal connector with four 7/8" hex bolts with nut and washer.

TERMINAL ANCHOR POST OPTIONS

(See General Note 11)

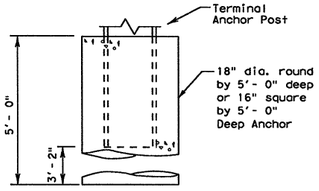

Notes:

Either concrete anchor may be used with either post option above.

No construction joint is allowed in the concrete anchor.

Terminal rail may be bolted to post and in twist position prior to placing concrete anchor.

If concrete anchor is precast, the area should be compacted as directed by the Engineer, when placed in the field.

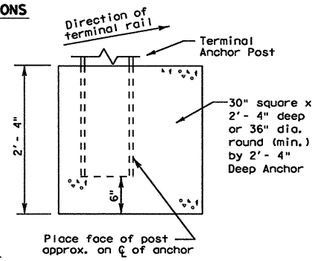

TERMINAL CONCRETE ANCHOR OPTIONS

(See General Note 11)

Note: Terminal Connector to be used with terminal anchor post options 2.

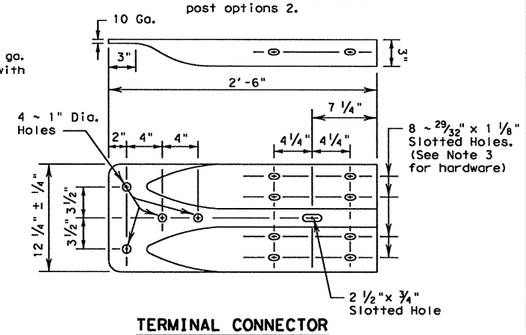

TERMINAL CONNECTOR

For connection hardware to concrete rails, see the MBGF transition standards.

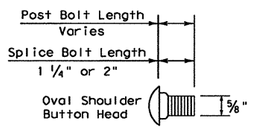

BUTTON HEAD BOLT

Post and Splice Bolts (See General Note 3)

GENERAL NOTES

1. The type of post (round wood post, rectangular wood post, or steel post) will be shown elsewhere in the plans. The exact position of MBGF shall be shown elsewhere in the plans or as directed by the Engineer. Steel posts to be galvanized in accordance with Item 445, "Galvanizing."
2. Rail element shall meet the requirements of Item 540, "Metal Beam Guard Fence" except as modified on the plans. The Contractor may furnish rail elements of 12 1/2 or 25 foot nominal lengths.
3. Button head "post" bolts (ASTM A307) shall be of sufficient length to extend through the full thickness of the nut (ASTM A563) and Type A (1 3/4" O.D.) washer and not more than 1" beyond it. Button head "splice" bolts (ASTM A307) are 5/8" x 1 1/4" (or 2" long at triple rail splices) with a 5/8" double recessed nut (ASTM A563).
4. Fittings (bolts, nuts, and washers) shall be galvanized in accordance with Item 445, "Galvanizing." Fittings shall be subsidiary to the bid item.
5. Crown shall be widened to accommodate the Metal Beam Guard Fence.
6. The lateral approach to the guard fence, shall have a slope rate of not more than 1V:10H.
7. Unless otherwise shown in the plans, guard fence placed in the vicinity of curbs shall be positioned so that the face of curb is located directly below or behind the face of the block. Rail placed over curbs shall be installed so that the post bolt is located approximately 21 inches above the gutter pan or roadway surface.
8. If solid rock is encountered within 0 to 18" of the finished grade, drill a 22" dia. hole, 24" into the rock, or drill two 12" dia. front to back overlapping holes, 24" into the rock. If solid rock is encountered below 18", drill a 12" dia. hole, 12" into the rock or to the standard embedment depth, whichever is less. Any excess post length, after meeting these depths, may be field cut to ensure proper guardrail mounting height. Backfill with a cohesionless material.
9. Posts shall not be set in concrete, of any depth.
10. Special fabrication will be required at installations having a curvature of less than 150 ft. radius.
11. The terminal anchor section (TAS) post shall be set in Class A concrete (unless otherwise shown in the plans) in accordance with Item 421, "Hydraulic Cement Concrete." Concrete shall be subsidiary to the bid item requiring construction of the terminal anchor section (TAS). Terminal anchor post to be galvanized in accordance with Item 445, "Galvanizing."
12. Unless otherwise shown in the plans, a composite material post and/or block that meets the requirements of DMS-7210, "Composite Material Posts and Blocks for Metal Beam Guard Fence" may be substituted for posts and/or blocks of similar dimensions. The Construction Division, TxDOT maintains a Material Producer List (MPL) for producers of materials conforming to DMS-7210. Only producers on the MPL can furnish composite material posts and/or blocks.

Texas Department of Transportation
Design Division Standard

METAL BEAM GUARD FENCE

MBGF-09

FILE: mbgf09.dgn	DN: TxDOT	CK: AM	DW: BD	CK:
©TxDOT July 1994	CONT	SECT	JOB	HIGHWAY
REVISIONS	0091	04	055	SH 289
	DIST	COUNTY		SHEET NO.
	18	COLLIN		210

DATE:
FILE:

R-201104-01

DISCLAIMER:
The use of this standard is governed by the "Texas Engineering Practice Act". No warranty of any kind is made by TxDOT for any purpose whatsoever. TxDOT assumes no responsibility for the conversion of this standard to other formats or for incorrect results or damages resulting from its use.

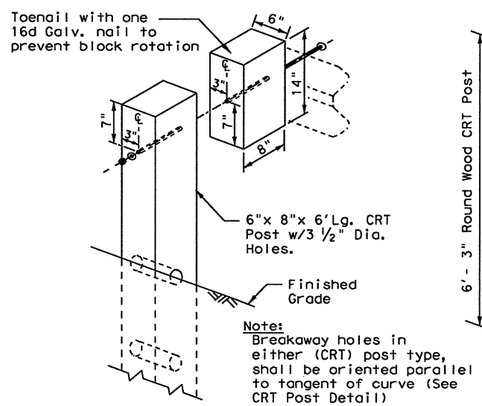

WOOD BLOCK TO RECTANGULAR WOOD (CRT) POST

Showing the required 3 1/2" Dia. holes.

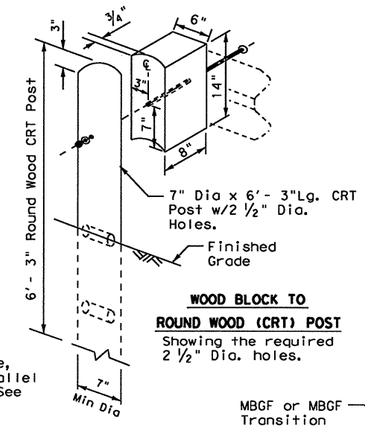

WOOD BLOCK TO ROUND WOOD (CRT) POST

Showing the required 2 1/2" Dia. holes.

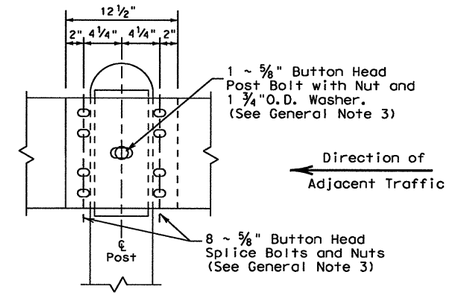

RAIL SPLICE DETAIL

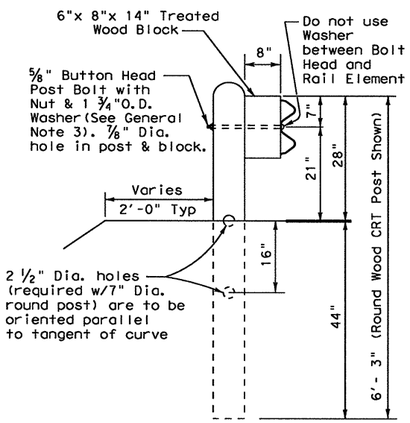

(CRT) POST DETAIL
CONTROLLED RELEASE TERMINAL POST

Two or more wood CRT post(s) are required at any radius installation located at intersecting roadways or driveways.

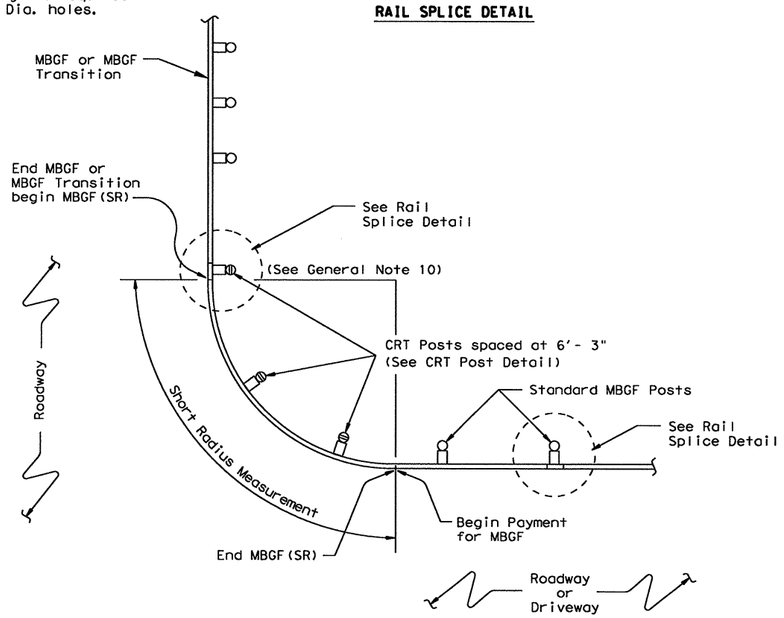

PLAN VIEW
SHOWING TYPICAL RADIUS

The required radius is shown elsewhere on the plans.

GENERAL NOTES

1. The type of (CRT) post (round wood post, or rectangular wood post) will be shown elsewhere in the plans. The exact position of MBGF shall be shown elsewhere in the plans or as directed by the Engineer.
2. Steel posts are not permitted at CRT post positions.
3. Rail element shall meet the requirements of Item 540, "Metal Beam Guard Fence" except as modified on the plans. The Contractor may furnish rail elements of 12 1/2 or 25 foot nominal lengths.
4. Button head "post" bolts (ASTM A307) shall be of sufficient length to extend through the full thickness of the nut (ASTM A563) and Type A (1 3/4" O.D.) washer and not more than 1" beyond it. Button head "splice" bolts (ASTM A307) are 5/8" x 1 1/4" (or 2" long at triple rail splices) with a 5/8" double recessed nut (ASTM A563).
5. Fittings (bolts, nuts, and washers) shall be galvanized in accordance with Item 445, "Galvanizing." Fittings shall be subsidiary to the bid item.
6. Crown shall be widened to accommodate the Metal Beam Guard Fence.
7. The lateral approach to the guard fence, shall have a slope rate of not more than 1V:10H.
8. Unless otherwise shown in the plans, guard fence placed in the vicinity of curbs shall be positioned so that the face of curb is located directly below or behind the face of the block. Rail placed over curbs shall be installed so that the post bolt is located approximately 21 inches above the gutter pan or roadway surface.
9. If solid rock is encountered within 0 to 18" of the finished grade, drill a 22" dia. hole, 24" into the rock, or drill two 12" dia. front to back overlapping holes, 24" into the rock. If solid rock is encountered below 18", drill a 12" dia. hole, 12" into the rock or to the standard embedment depth, whichever is less. Any excess post length, after meeting these depths, may be field cut to ensure proper guardrail mounting height. Backfill with a cohesionless material.
10. Guardrail posts shall not be set in concrete, of any depth.
11. Special rail fabrication will be required at installations having a curvature of less than 150 ft. radius. The required radius shall be shown on the plans.
12. The terminal anchor section (TAS) post shall be set in Class A concrete (unless otherwise shown in the plans) in accordance with Item 421, "Hydraulic Cement Concrete." Concrete shall be subsidiary to the bid item requiring construction of the terminal anchor section (TAS). Terminal anchor post to be galvanized in accordance with Item 445, "Galvanizing."
13. Unless otherwise shown in the plans, a composite material post and/or block that meets the requirements of DMS-7210, "Composite Material Posts and Blocks for Metal Beam Guard Fence" may be substituted for posts and/or blocks of similar dimensions. The Construction Division, TxDOT maintains a Material Producer List (MPL) for producers of materials conforming to DMS-7210. Only producers on the MPL can furnish composite material posts and/or blocks.

"DRIVEWAY" TERMINAL ANCHOR SECTION

Only for use within driveway locations, where a standard (TAS) Terminal Anchor Section can not be installed.

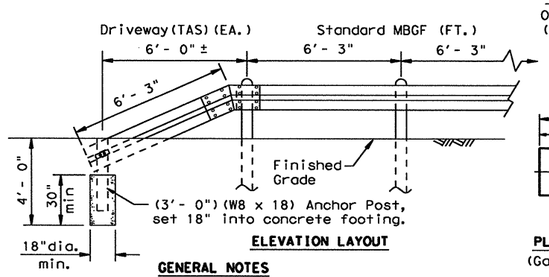

ELEVATION LAYOUT

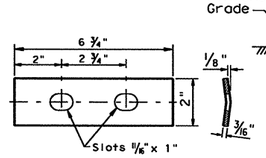

PLATE WASHER FOR METAL BEAM

(Galvanized after fabrication)

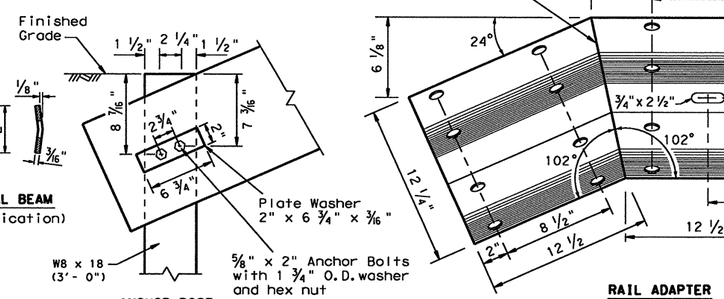

ANCHOR POST

RAIL ADAPTER

Rail - 10 gauge
(Galvanized after fabrication)

GENERAL NOTES

1. The "Driveway" Terminal Anchor Section is ONLY to be used within driveway locations, where the ROW is limited and a standard 25 ft. (TAS) Terminal Anchor Section, is too long.
2. Terminal anchor post shall be set in Class A concrete.
3. All steel shall be galvanized after fabrication in accordance with Item 445, "Galvanizing."

Texas Department of Transportation
Design Division Standard

METAL BEAM GUARD FENCE
(SHORT RADIUS)
MBGF (SR) - 10A

FILE: mbgsr10a.dgn	DN: TxDOT	CK: AM	DW: BD	CK:
©TxDOT June 2010	CONT	SECT	JOB	HIGHWAY
REVISIONS	0091	04	055	SH 289
	DIST		COUNTY	SHEET NO.
	18		COLLIN	211

DATE:
FILE:

R-201104-01

DISCLAIMER:
The use of this standard is governed by the "Texas Engineering Practice Act". No warranty of any kind is made by TxDOT for any purpose whatsoever. TxDOT assumes no responsibility for the conversion of this standard to other formats or for incorrect results or damages resulting from its use.

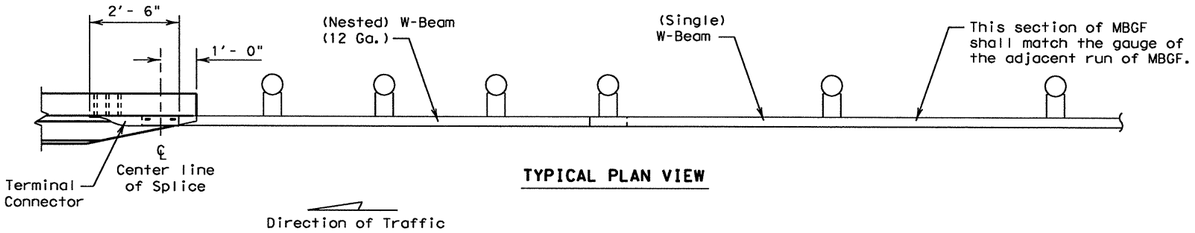

TYPICAL PLAN VIEW

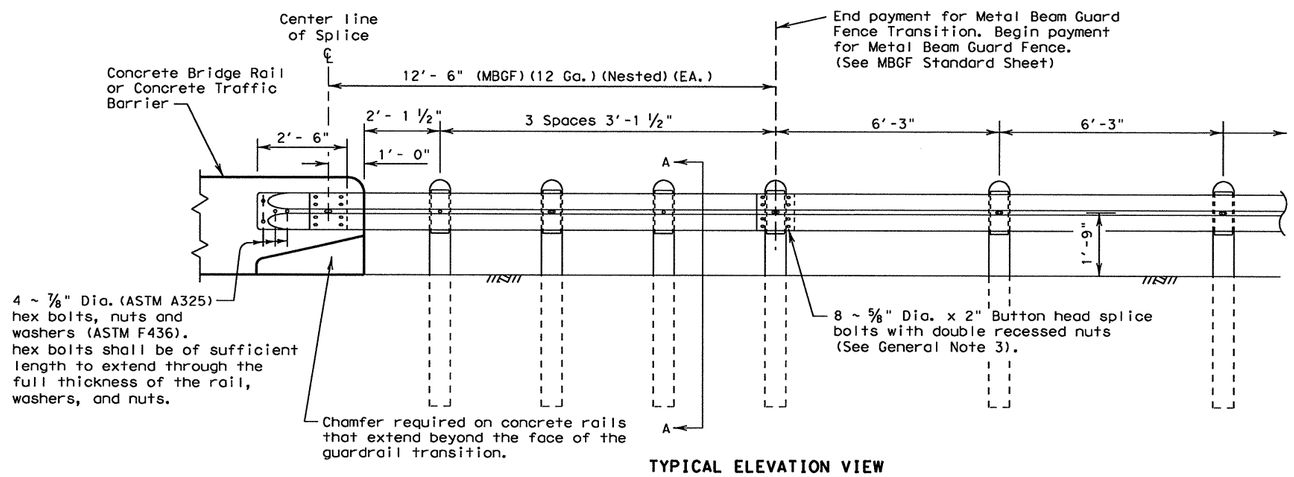

TYPICAL ELEVATION VIEW

GENERAL NOTES

1. The type of post (round wood post, rectangular wood post, or steel post) will be shown elsewhere in the plans. The exact position of transitions shall be shown elsewhere in the plans or as directed by the Engineer.
2. Rail element shall meet the requirements of Item 540, "Metal Beam Guard Fence" except as modified on the plans.
3. Button head "post" bolts (ASTM A307) shall be of sufficient length to extend through the full thickness of the nut and Type A 1 ¾" O.D. washer and not more than 1" beyond it. Button head "splice" bolts (ASTM A307) are ⅝" x 2" (at triple rail splices) with ⅝" double recessed nuts (ASTM A563).
4. Fittings (bolts, nuts, and washers) shall be galvanized in accordance with Item 445, "Galvanizing." Fittings shall be subsidiary to the bid item requiring construction of the transition.
5. Crown will be widened to accommodate transitions.
6. If solid rock is encountered. See the MBGF standard sheet for the proper installation guidance.
7. Posts shall not be set in concrete.
8. Unless otherwise shown in the plans, a composite material post and/or block that meets the requirements of DMS-7210, "Composite Material Posts and Blocks for Metal Beam Guard Fence" may be substituted for posts and/or blocks of similar dimensions. The Construction Division, TxDOT, maintains a Material Producer List (MPL) for producers of materials conforming to DMS-7210. Only producers on the MPL can furnish composite material posts and/or blocks.
9. Refer to MBGF standard sheet for additional details.

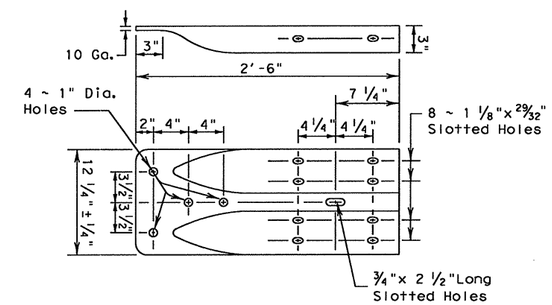

TERMINAL CONNECTOR

FOR USE WITH MBGF CONNECTIONS TO CONCRETE BRIDGE RAILS AND TRAFFIC BARRIERS

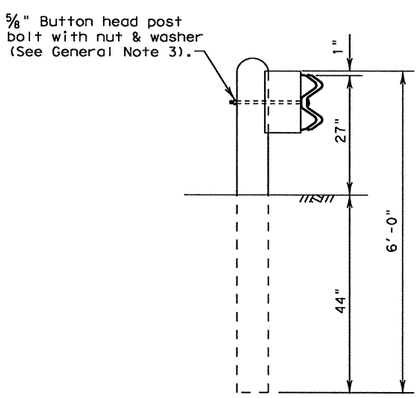

SECTION A-A

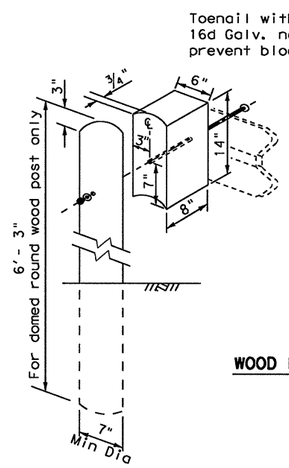

WOOD BLOCK TO ROUND WOOD POST

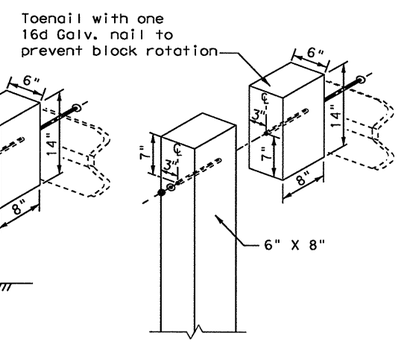

WOOD BLOCK TO RECTANGULAR WOOD POST

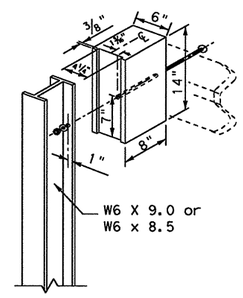

WOOD BLOCK TO STEEL POST

Texas Department of Transportation
Design Division Standard

METAL BEAM GUARD FENCE TRANSITION (TL2)

(Low Speed Transition)

MBGF (TL2)-09

FILE: mbgt1209.dgn	DN: TxDOT	CK: AM	DW: BD	CK:
©TxDOT April 2003	CONT	SECT	JOB	HIGHWAY
REVISIONS	0091	04	055	SH 289
	DIST		COUNTY	SHEET NO.
	18		COLLIN	212

DATE:
FILE:

R-201104-01

DISCLAIMER:
The use of this standard is governed by the "Texas Engineering Practice Act". No warranty of any kind is made by TxDOT for any purpose whatsoever. TxDOT assumes no responsibility for the conversion of this standard to other formats or for incorrect results or damages resulting from its use.

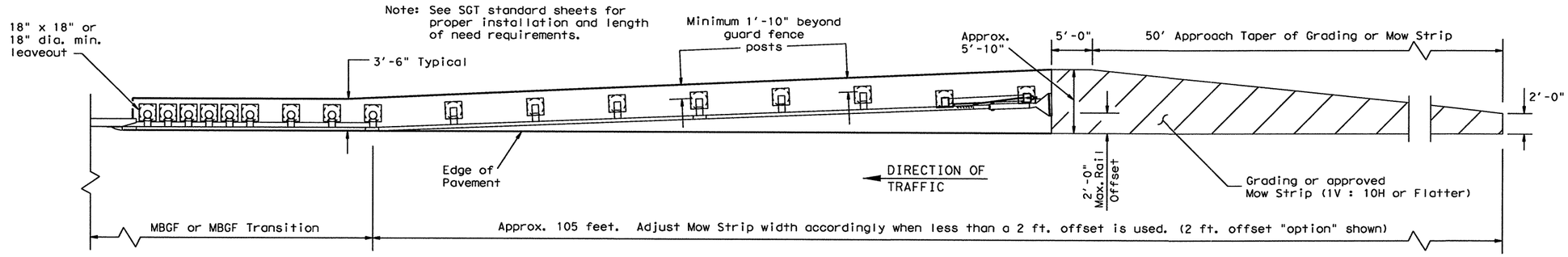

GRADING AND MOW STRIP AT GUARDRAIL END TREATMENTS

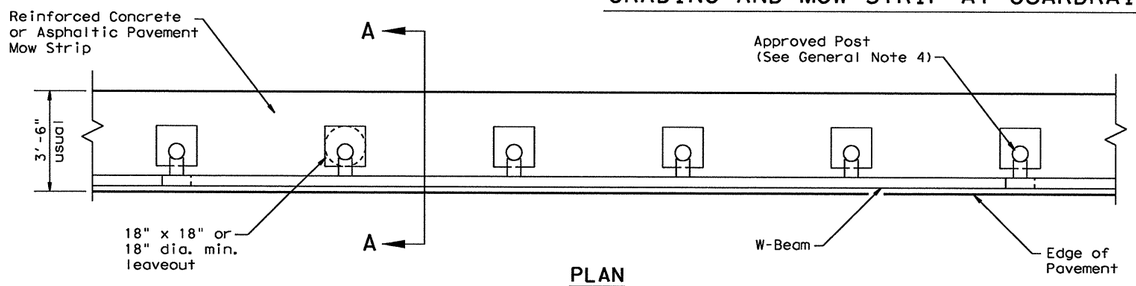

PLAN

Regular MBGF shown with Mow Strip

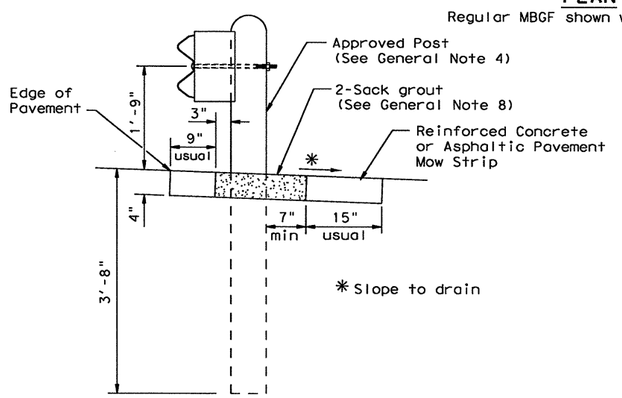

SECTION A-A

Typical

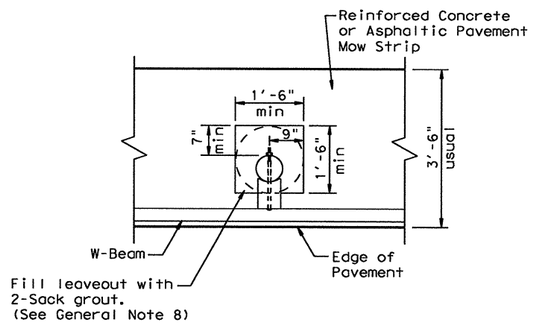

MOW STRIP DETAIL

Reinforced Concrete or Asphaltic Pavement Mow Strip with 18" x 18" or 18" dia. minimum leaveout.

Note: Site Condition(s)

Site conditions may exist where grading is required for the proper installation of metal guard fence and end treatments.

Approach grading or mow strip may be decreased or eliminated. As directed by the Engineer.

GENERAL NOTES

1. This mow strip design is for use with metal beam guard fence, guard fence transitions, and guard fence end treatments (See SGT standards for proper SGT installation).
2. Mow strips shall be asphaltic pavement or reinforced concrete (wire mesh or synthetic fiber), as shown on the plans and will be paid for under the pertinent bid item of work. Asphaltic pavement shall meet the requirements of the item, and be placed in accordance with the pertinent bid item as shown on the plans. Reinforced concrete shall be placed in accordance with Item 432, "Riprap." The use of the synthetic fiber in lieu of steel reinforcing is acceptable, provided the fiber producer is on the Department Material Producer List (MPL), maintained by TxDOT, Construction Division.
3. The leaveout behind the post shall be a minimum of 7".
4. The type of approved post will be shown elsewhere in the plans. See the applicable standard sheets for additional details and information.
5. Other curb placement options may be used. Curbs are not considered part of the mow strip and will be paid for under other pertinent bid item.
6. Depth of mow strip will be 4".
7. The limits of payment for asphaltic pavement or reinforced concrete will include leaveouts for post.
8. The leaveouts shall be filled with no more than a 2-sack grout mixture and placed in accordance with Section 421.2.F, "Mortar and Grout." Payment for furnishing and placing the grout mixture will be considered subsidiary to the pay item of asphaltic pavement or reinforced concrete.

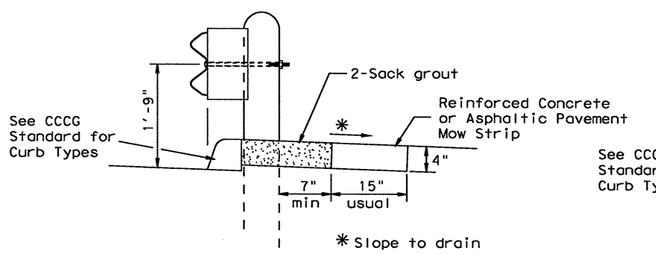

CURB OPTION (1)

This option will increase the post embedment through out the system.

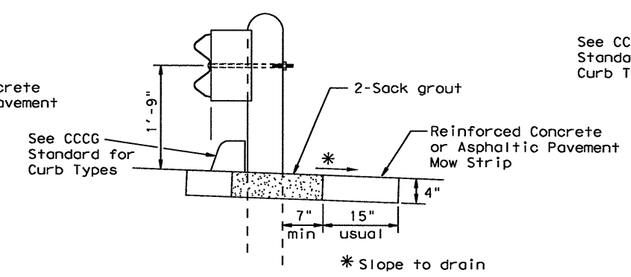

CURB OPTION (2)

Curb shown on top of mow strip

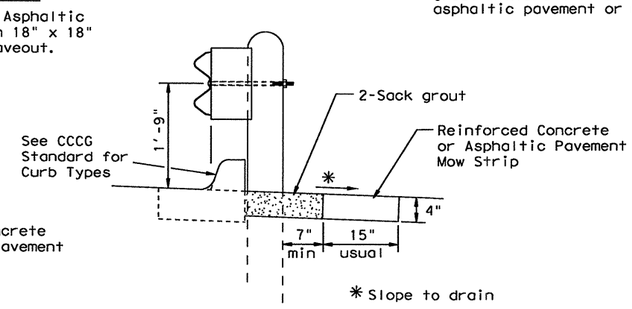

CURB OPTION (3)

Texas Department of Transportation
Design Division Standard

METAL BEAM GUARD FENCE (MOW STRIP)

MBGF (MS) - 10

FILE: mbgfms10.dgn	DN: TxDOT	CK:	DW:	CK:
© TxDOT April 2003	CONT	SECT	JOB	HIGHWAY
REVISIONS	0091	04	055	SH 289
	DIST		COUNTY	SHEET NO.
	DAL		COLLIN	213

DATE:
FILE:

R-201104-01

DISCLAIMER:
The use of this standard is governed by the "Texas Engineering Practice Act". No warranty of any kind is made by TxDOT for any purpose whatsoever. TxDOT assumes no responsibility for the conversion of this standard to other formats or for incorrect results or damages resulting from its use.

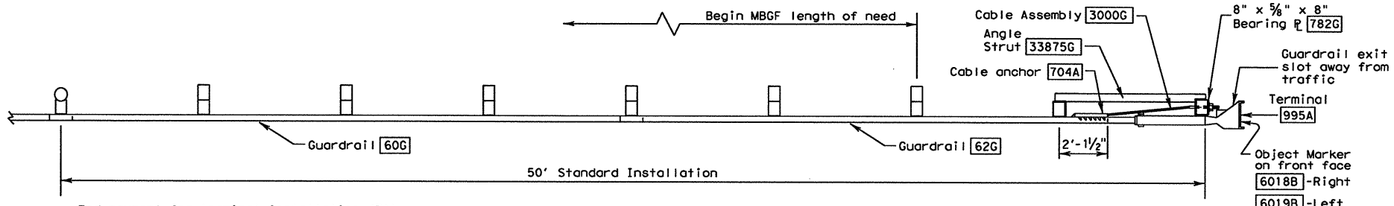

PLAN

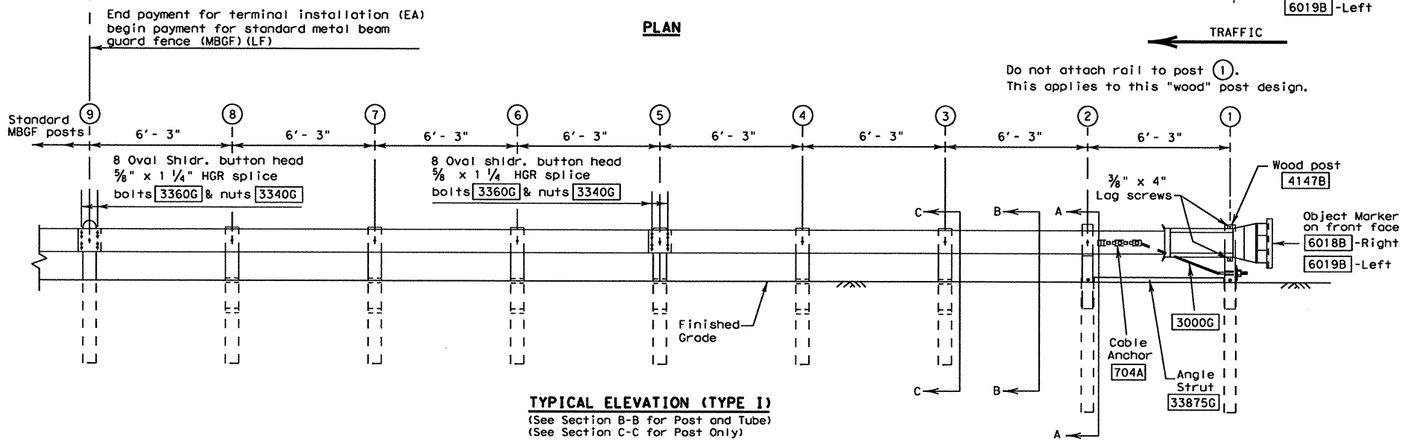

TYPICAL ELEVATION (TYPE I)
(See Section B-B for Post and Tube)
(See Section C-C for Post Only)

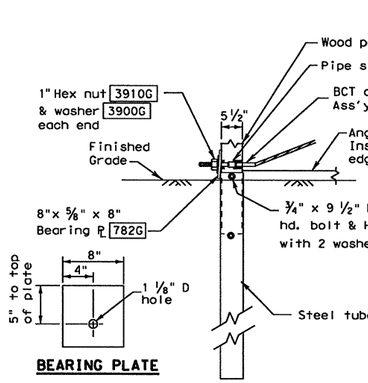

BEARING PLATE

PARTIAL VIEW AT POST #1

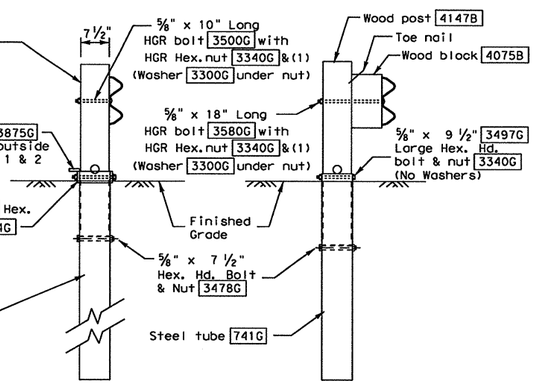

SECTION A-A
(at post 2)

SECTION B-B
(Typ. at Posts 3 thru 8, Type II & III)

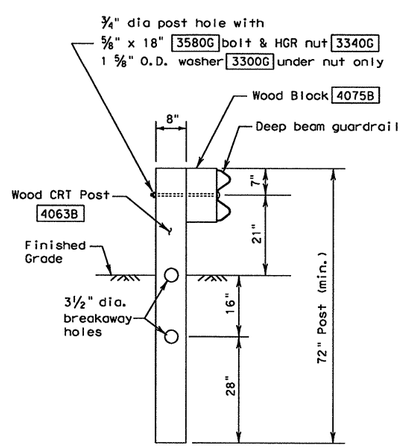

SECTION C-C
(Typ. at post only positions)

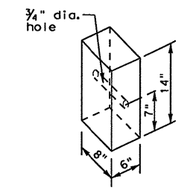

WOOD BLOCK
4075B

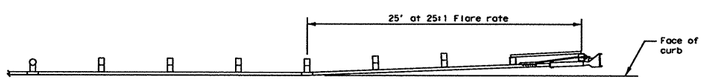

DETAIL A
Placement at curbed locations
(See General Note 4)

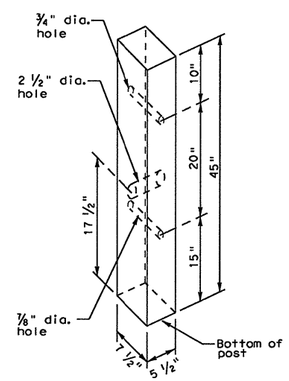

All measurements should be taken from bottom of posts.

WOOD POST
4147B

POST & TUBE OPTIONS			
Type I	Posts	①	thru ②
Type II	Posts	①	thru ④
Type III	Posts	①	thru ⑧

Note: Site Condition(s)

Site conditions may exist where grading is required for the proper installation of metal guard fence and end treatments.

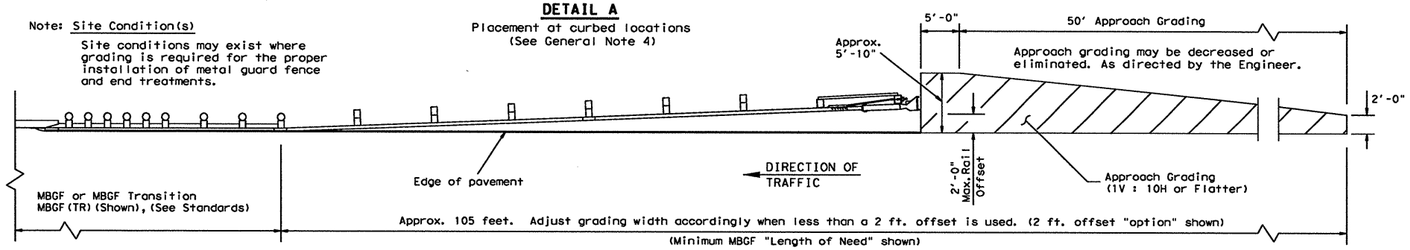

GRADING AT GUARDRAIL END TREATMENTS

GENERAL NOTES

1. The Type of SGT unit will be specified elsewhere in the plans. Numbers in circles indicate post position. The Type of SGT unit chosen is a maintenance consideration and does not affect the systems performance.

Post & Tube Options		Post Only
Type I	Posts ① thru ②	Posts ③ thru ⑧
Type II	Posts ① thru ④	Posts ⑤ thru ⑧
Type III	Posts ① thru ⑧	None

2. SGT's placed within the "minimum" 150 ft. radius, shall be installed straight. Standard rail elements may be installed within the radius, without special fabrication.
3. All bolts, nuts, cable assemblies, cable anchors, steel tubes & bearing plates shall be galvanized.
4. At non-curbed locations, a flare rate of 25:1 may be used over the first 50 ft. of the system to prevent the terminal head from encroaching on the shoulder. The flare may be decreased or eliminated for specific installations, if directed by the Engineer.
   At curbed locations, a flare rate of 25:1 shall be used beginning at post number 5 and ending at post number 1.
5. The steel tubes shall not protrude more than 4 inches above ground. Site grading may be necessary to meet this requirement.
6. The steel tubes may be driven with an approved driving head. They shall not be driven with the wood post in the tube. If the steel tubes are placed in drilled holes, the backfill material must be satisfactorily compacted to prevent tube settlement.
7. If solid rock is encountered. See the manufacturer's installation manual for the proper installation guidance.
8. The breakaway cable assembly must be taut. A locking device, (vice grips or channel lock pliers) should be used to prevent the cable from twisting when tightening the nuts.
9. The wood blocks shall be "toe nailed" to the rectangular wood posts to prevent them from turning when the wood shrinks.
10. For curb installations, the soil tubes and posts shall be installed at the proper ground elevation behind the curb. The posts will then require field drilling new holes to accommodate the rail to post connection bolt to maintain the proper height of the rail above the gutter pan. The excess post length above the rail will be removed if directed by the Engineer.
11. An object marker shall be installed on the front of the impact head as detailed on D&OM(VIA).
12. A special site evaluation should be considered, prior to using this end treatment where there is less than 25 feet between the extrusion side of the end treatment and any adjacent driving lane.

BILL OF MATERIAL

Code #	POST & TUBE OPTIONS Type I Qty.	Type II Qty.	Type III Qty.	DESCRIPTION
62G	1	1	1	#1 Deep Beam Guardrail (12 Ga) at 25'
60G	1	1	1	#2 Deep Beam Guardrail (12 Ga) at 25'
724G	2	2	2	Steel Tube - 6"x 8"x 72"x 1/8" min
741G	0	2	6	Steel Tube - 6" x 8" x 54" x 1/8" min
4147B	2	4	8	Wood Posts - 5 1/2" x 7 1/2" x 45"
4063B	6	4	0	Wood CRT Posts - 6"x 8"x 72"
4075B	6	6	6	Wood Block - 6"x 8"x 14"
705G	1	1	1	Pipe Sleeve - 2" std. pipe x 5 1/2"
782G	1	1	1	Bearing Plate - 8"x 8"x 5/8"
704A	1	1	1	Cable Anchor
3000G	1	1	1	Cable Assembly (3/4" x 78")
33875G	1	1	1	Angle Strut
995A	1	1	1	ET-2000 Plus Guardrail Terminal
				HARDWARE
5148G	2	2	2	3/4" x 9 1/2" Hex Hd (Top of tubes 1&2) A325
3300G	7	7	7	5/8" Washers
3478G	2	4	8	5/8" x 7 1/2" Hex Bolt
3500G	1	1	1	5/8" x 10" Post Bolt (Post 2 of LET)
3580G	6	6	6	5/8" x 18" HGR Post Bolt (posts ③ thru ⑧)
3360G	16	16	16	5/8" x 1 1/4" HGR Splice Bolt
3340G	25	27	31	5/8" HGR Nut (16-spl, 7-posts)
4228G	2	2	2	3/8" x 4" Lag Screw
3910G	2	2	2	1" Hex Nut (Anchor Cable)
3900G	2	2	2	1" Washer (Anchor Cable)
6018B	1	1	1	Right - Object Marker
6019B	1	1	1	Left - Object Marker
3700G	4	4	4	3/4" Washer
3704G	2	2	2	3/4" Heavy Hex Nut
3497G	0	2	6	5/8" x 9 1/2" Hex Hd (Top of Tubes 3-8) A307

Texas Department of Transportation
Design Division Standard

SINGLE GUARDRAIL TERMINAL
(ET-2000 PLUS)
(WOOD POST)

SGT(7)-10

FILE: sgt710.dgn	DN: TxDOT	CK: AM	DW: BD	CK:
©TxDOT April 1997	CONT	SECT	JOB	HIGHWAY
REVISIONS	0091	04	055	SH 289
	DIST	COUNTY		SHEET NO.
	18	COLLIN		214

DATE:
FILE:

R-201104-01

DISCLAIMER:
The use of this standard is governed by the "Texas Engineering Practice Act". No warranty of any kind is made by TxDOT for any purpose whatsoever. TxDOT assumes no responsibility for the conversion of this standard to other formats or for incorrect results or damages resulting from its use.

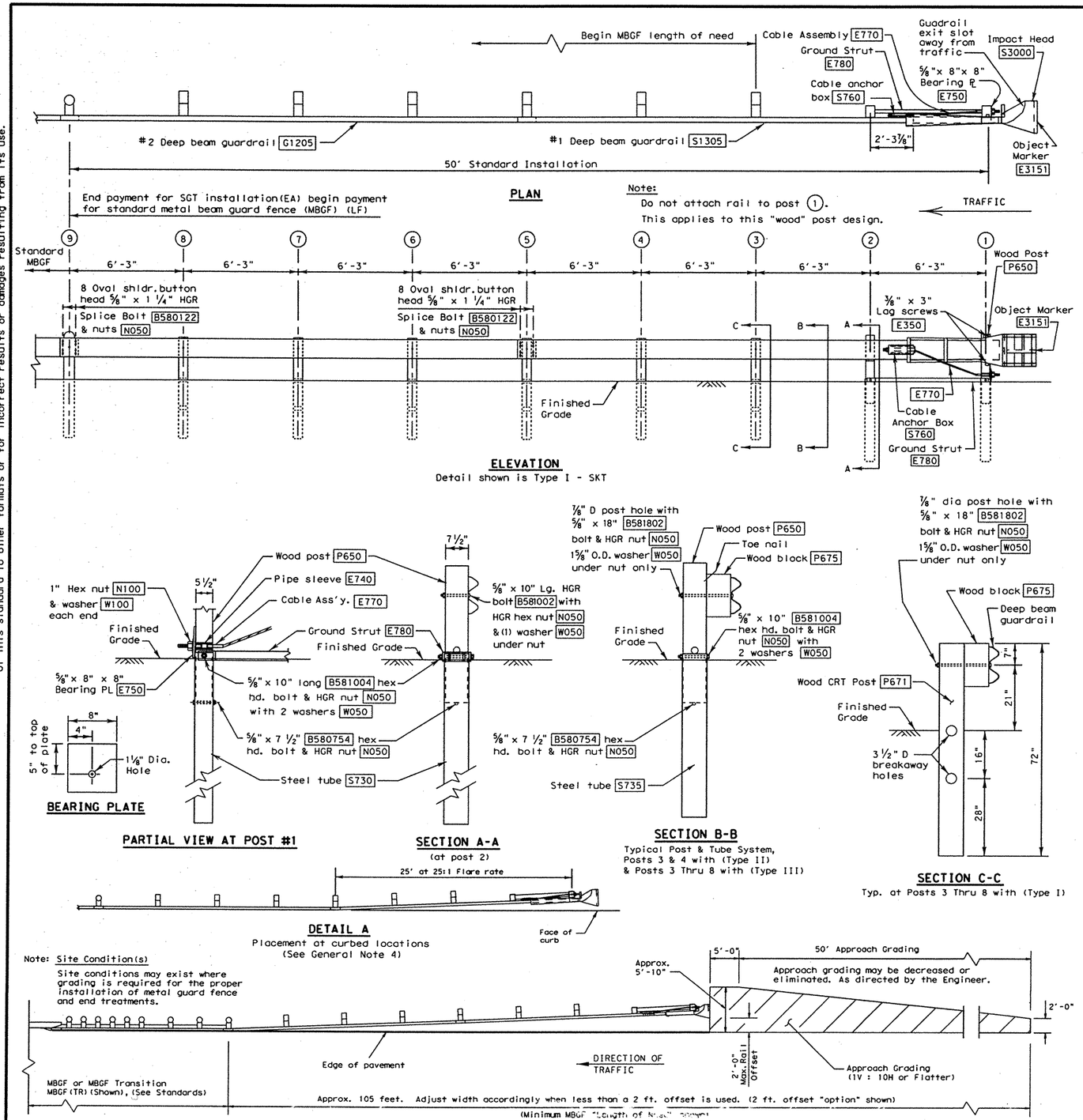

GRADING AT GUARDRAIL END TREATMENTS

GENERAL NOTES

1. The Type of SGT unit will be specified elsewhere in the plans. Numbers in circles indicate post position. The Type of SGT unit chosen is a maintenance consideration and does not affect the systems performance.

	Post & Tube Options	Post Only
Type I	Posts 1 thru 2	Posts 3 thru 8
Type II	Posts 1 thru 4	Posts 5 thru 8
Type III	Posts 1 thru 8	None

2. SGT's placed within the "minimum" 150 ft. radius, shall be installed straight. Standard rail elements may be installed within the radius, without special fabrication.
3. All bolts, nuts cable assemblies, cable anchors, steel tubes & bearing plates shall be galvanized.
4. At non-curbed locations, a flare rate of 25:1 may be used over the first 50 ft. of the system to prevent the terminal head from encroaching on the shoulder. The flare may be decreased or eliminated for specific installations, if directed by the Engineer.
   At curbed locations, a flare rate of 25:1 shall be used beginning at post number 5 and ending at post number 1.
5. The steel tubes shall not protrude more than 4 inches above ground. Site grading may be necessary to meet this requirement.
6. The steel tubes may be driven with an approved driving head. They shall not be driven with the wood post in the tube. If the steel tubes are placed in drilled holes, the backfill material must be satisfactorily compacted to prevent tube settlement.
7. If solid rock is encountered. See the Manufacturer's installation manual for the proper installation guidance.
8. The breakaway cable assembly must be taut. A locking device, (vice grips or channel lock pliers) should be used to prevent the cable from twisting when tightening the nuts.
9. The wood blocks shall be "toe nailed" to the rectangular wood posts to prevent them from turning when the wood shrinks.
10. For curb installations, the soil tubes and posts shall be installed at the proper ground elevation behind the curb. The posts will then require field drilling new holes to accommodate the rail to post connection bolt to maintain the proper height of the rail above the gutter pan. The excess post length above the rail will be removed if directed by the Engineer.
11. An object marker shall be installed on the front of the impact head as detailed on D&OM(VIA).
12. A special site evaluation should be considered, prior to using this end treatment where there is less than 25 feet between the outlet side of the end treatment and any adjacent driving lane.

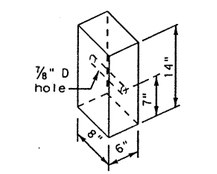

WOOD BLOCK
P675

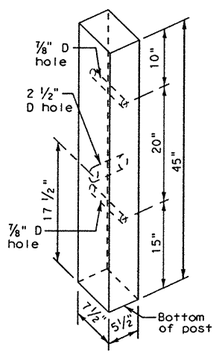

All measurements should be taken from bottom of posts.

WOOD POST
P650

Code #	Post & Tube Options Type I Qty.	Type II Qty.	Type III Qty.	BILL OF MATERIAL DESCRIPTION
S1305	1	1	1	#1 Deep Beam Guardrail (12 Ga.)
G1205	1	1	1	#2 Deep Beam Guardrail (12 Ga.)
S730	2	2	2	Steel Tube - 6" x 8" x 72" x 3/16" or 1/8" min
S735	0	2	6	Steel Tube - 6" x 8" x 54" x 3/16" or 1/8" min
P650	2	4	8	Wood Posts - 5 1/2" x 7 1/2" x 45"
P671	6	4	0	Wood CRT Posts - 6" x 8" x 72"
P675	6	6	6	Wood Block - 6" x 8" x 14"
E740	1	1	1	Pipe Sleeve - 2" Std. Pipe x 5 1/2"
E750	1	1	1	Bearing Plate - 5/8" x 8" x 8"
S760	1	1	1	Cable Anchor Box
E770	1	1	1	Cable Assembly
E780	1	1	1	Ground Strut
S3000	1	1	1	Impact Head
HARDWARE				
B580754	2	4	8	5/8" x 7 1/2" Hex Hd. Bolt
B581004	2	4	8	5/8" x 10" Hex Hd. Bolt (Top of Tubes)
W050	11	15	23	5/8" Washers
B581002	1	1	1	5/8" x 10" HGR Post Bolt (Post 2)
B580122	16	16	16	5/8" x 1 1/4" HGR Splice Bolt
B581802	6	6	6	5/8" x 18" HGR Post Bolt (Posts 3 thru 8)
N050	27	31	39	5/8" HGR Nut (16-Spl, 8-Posts, 2-Strut)
E350	2	2	2	3/8" x 3" Lag Screw
N100	2	2	2	1" Hex Nut (Anchor Cable)
W100	2	2	2	1" Washer (Anchor Cable)
SB58A	8	8	8	Cable Anchor Box Shoulder Bolts
N055A	8	8	8	1/2" A325 Structural Nut
W050A	16	16	16	1/2" A325 Structural Washer
E3151	1	1	1	Object Marker - (18" x 18")

POST & TUBE OPTIONS	
Type I	post 1 thru 2
Type II	post 1 thru 4
Type III	post 1 thru 8

Texas Department of Transportation
Design Division Standard

SINGLE GUARDRAIL TERMINAL
(SKT 350) (WOOD POST)
SGT(8)-09

FILE: sgt809.dgn	DN: TxDOT	CK: AM	DW: BD	CK:
©TxDOT July 2001	CONT 0911	SECT 04	JOB 055	HIGHWAY SH289
REVISIONS	DIST 18		COUNTY Collin	SHEET NO. 214A

DATE:
FILE:

R-201104-01

DISCLAIMER:
The use of this standard is governed by the "Texas Engineering Practice Act". No warranty of any kind is made by TxDOT for any purpose whatsoever. TxDOT assumes no responsibility for the conversion of this standard to other formats or for incorrect results or damages resulting from its use.

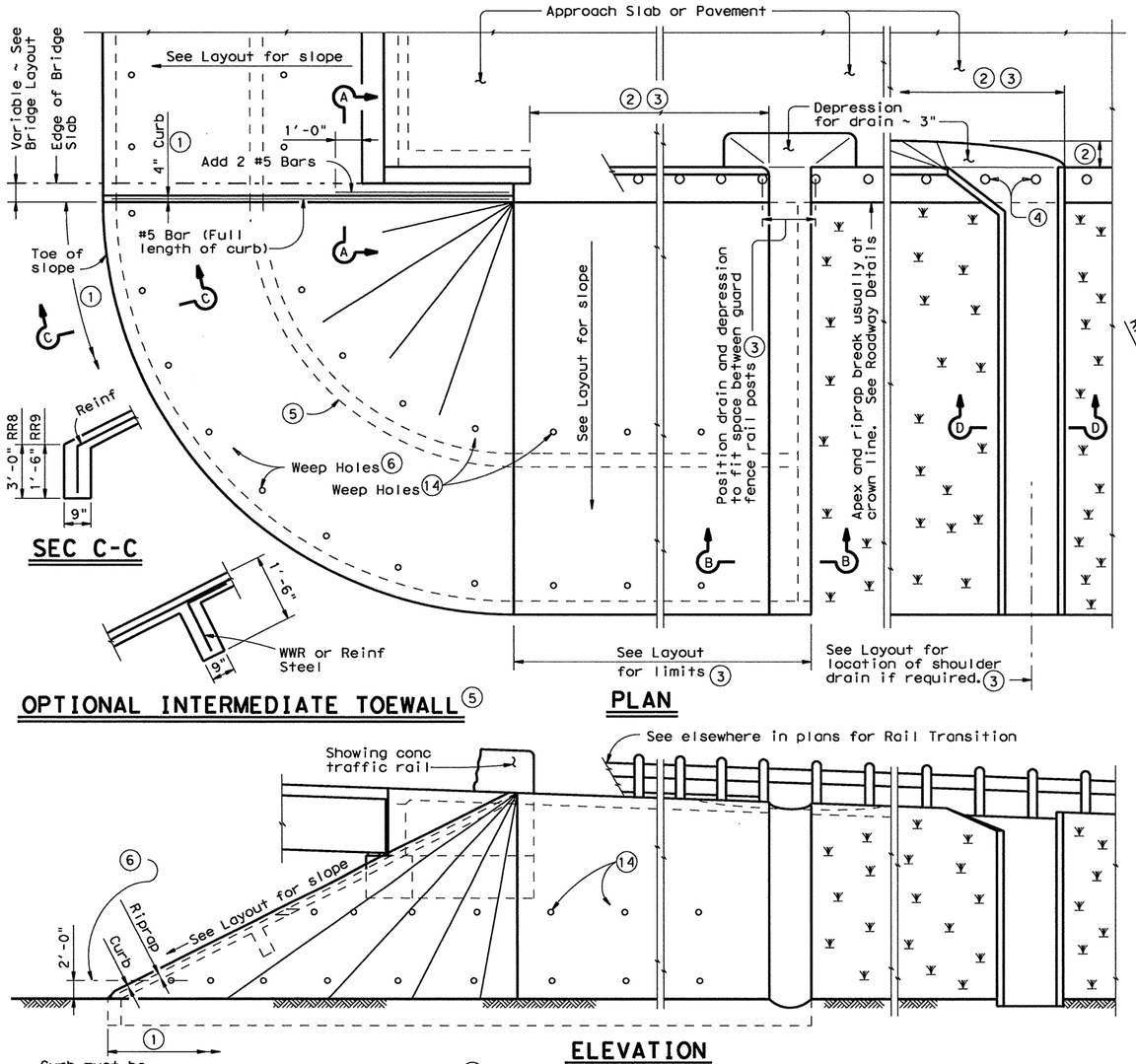

SEC C-C

OPTIONAL INTERMEDIATE TOEWALL (5)

PLAN

ELEVATION

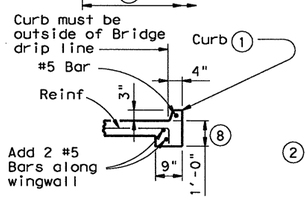

SEC A-A

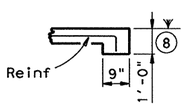

SEC B-B

(No Drain)

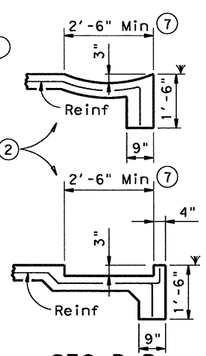

SEC B-B

(Shoulder Drain integral with riprap)

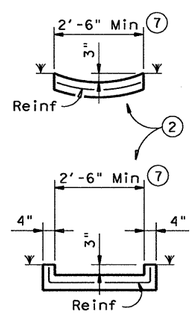

SEC D-D

(Shoulder Drain)

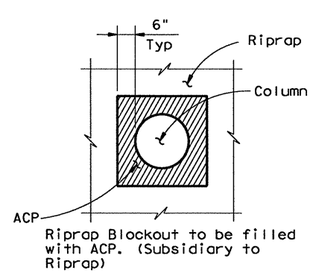

RIPRAP DETAIL AT COLUMNS

(As directed by the Engineer)

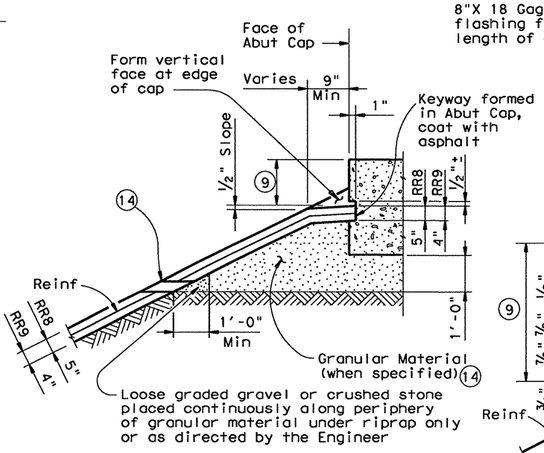

SHOWING KEYWAY OPTION

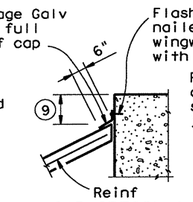

CAP OPTION A

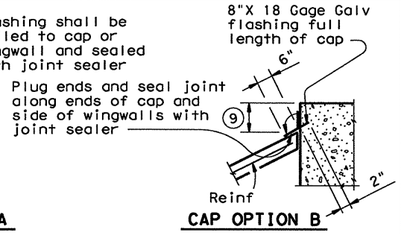

CAP OPTION B

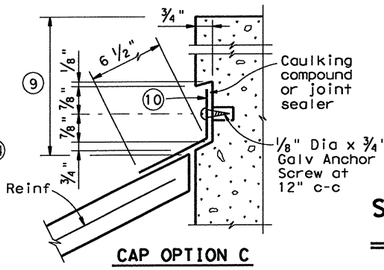

CAP OPTION C

SECTIONS THRU RIPRAP AT CAP (11)

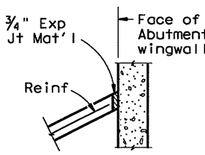

SECT THRU RIPRAP AT WINGWALL (12)

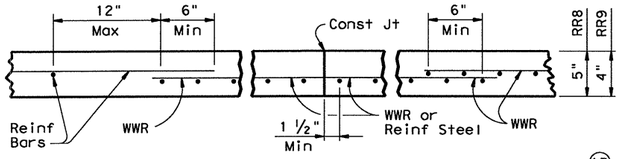

DETAILS OF WWR, REINF AND CONST JOINT (13)

(1) When riprap is shown extended around header on layout, extend slab and toewall as shown and eliminate 4" curb.

(2) Limits and configuration of drains and depressions shall be as shown elsewhere in plans or as directed by the Engineer.

(3) Location of shoulder drain must consider limitations imposed by rail transition. Do not locate shoulder drains at expansion joints between approach slab and concrete pavement.

(4) See details elsewhere in plans for installation of guard fence posts through concrete riprap.

(5) The optional intermediate toewall shall be constructed when designated elsewhere in the plans or included in the specifications.

(6) Provide lower level of 2" Dia weep holes at 10' c-c backed by 1 CF packet of gravel and galvanized hardware cloth at all locations unless directed by the Engineer to eliminate.

(7) Wider or other drain configurations shall be used if shown elsewhere in plans or if directed by the Engineer.

(8) Wall extension may be reduced or modified if approved by the Engineer. Wall extension shall be increased to 1'-6" whenever the optional intermediate toewall is called for in the plans.

(9) Top of cap to top of riprap dimension varies as directed by the Engineer. Should be 9" Min for beam/slab type bridges and 1'-6" for slab span, box beam, or slab beam bridges.

(10) 8" x 18 Gage Galv Sheet Metal

(11) The sealing option of the joint between the face of cap and riprap shall be as designated by the Engineer or as shown elsewhere on plans.

(12) Flashing (shown in Cap Option A) may be used at wingwall in addition to Exp Jt Mat'l if shown on plans or directed by the Engineer.

(13) Reinforcing bars shall be #3 at 18" Spa c-c. Welded Wire Reinforcement (WWR) shall be 6X6-W2.9XW2.9. Combinations of WWR and reinforcing bars may be used if both are permitted. Lap splices shall be a minimum of 6 inches, measured from the transverse wire of WWR, and the ends of reinforcing bars.

(14) If granular material is specified, provide upper level of 2" Dia weep holes at 10' c-c backed by galvanized hardware cloth.

GENERAL NOTES:

Concrete shall be Class "B" with a minimum compressive strength of 2,000 psi unless noted elsewhere in plans.

All reinforcing steel shall be Grade 60.

Reinforcing other than that shown may be used by substituting reinforcement of equal or greater unit cross-sectional area. The maximum reinforcement spacing shall be 18 inches.

Construction joints or grooved joints extending the full slant slope height shall be at intervals of approximately 20 feet unless otherwise directed by the Engineer.

Hardware cloth, loose graded stone behind weep holes, flashing, or other sealing material shall not be paid for directly but shall be subsidiary to the bid item "Riprap".

Unless specified elsewhere in the plans to be only reinforcing bars, the riprap reinforcing may be composed of reinforcing bars, Welded Wire Reinforcement (WWR), or any suitable combination of both types.

See Layout for limits of riprap.

RR8 is to be used on stream crossings.

RR9 is to be used on other embankments.

FOR CONTRACTOR'S INFORMATION ONLY:

5" of RR8	= 0.015 CY/SF
4" of RR9	= 0.012 CY/SF
#3 Reinf at 18" c-c	= 0.501 Lbs/SF
6X6-W2.9XW2.9	= 0.394 Lbs/SF

Texas Department of Transportation
Bridge Division

CONCRETE RIPRAP AND SHOULDER DRAINS
EMBANKMENTS AT BRIDGE ENDS (TYPES RR8 & RR9)

CRR

FILE: crrstdel.dgn	DN: TxDOT	CK: TxDOT	DW: TxDOT		CK: TxDOT
© TxDOT April 2006	DISTRICT	STATE PROJECT NO.			SHEET
REVISIONS 08-2007: Revised Note 6, removed "H" reference, added Note 14 & changed weep hole size & spacing.	DAL	(SEE TITLE SHEET)			215
	COUNTY		CONTROL	SECT	JOB	HIGHWAY
	COLLIN		0091	04	055	SH 289

R-201104-01

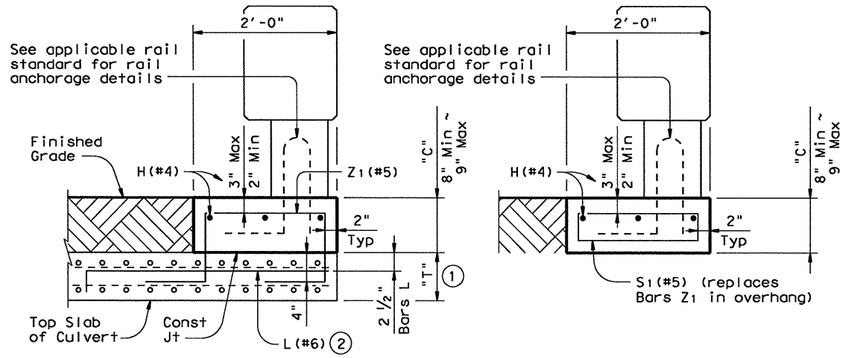

SECTION A-A

SECTION B-B

TYPE 1 CURB

Used for curbs from 8" to 9" (Showing "C"= 9")
Showing T223 Rail, other rails similar. (Bars L on T223 and C223 Rails are not used for this structure.)

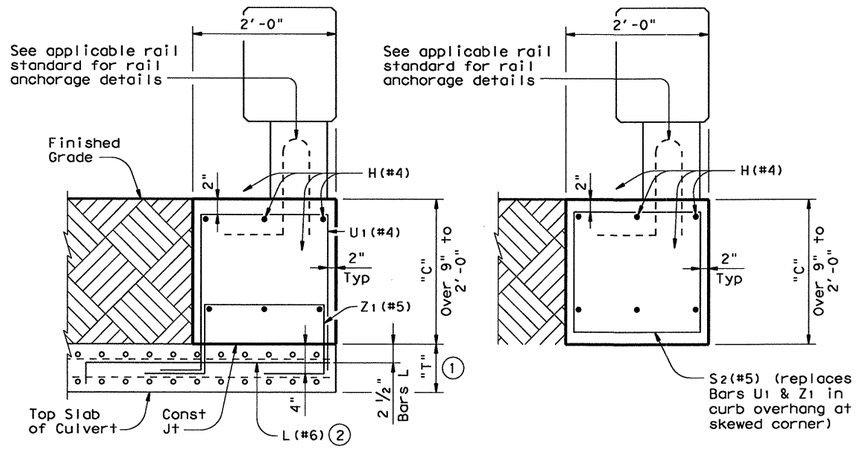

SECTION A-A

SECTION B-B

TYPE 2 CURB

Used for curbs over 9" to 2'-0" (Showing "C"= 2'-0")
Showing T223 Rail, other rails similar. (Bars L on T223 and C223 Rails are not used for this structure.)

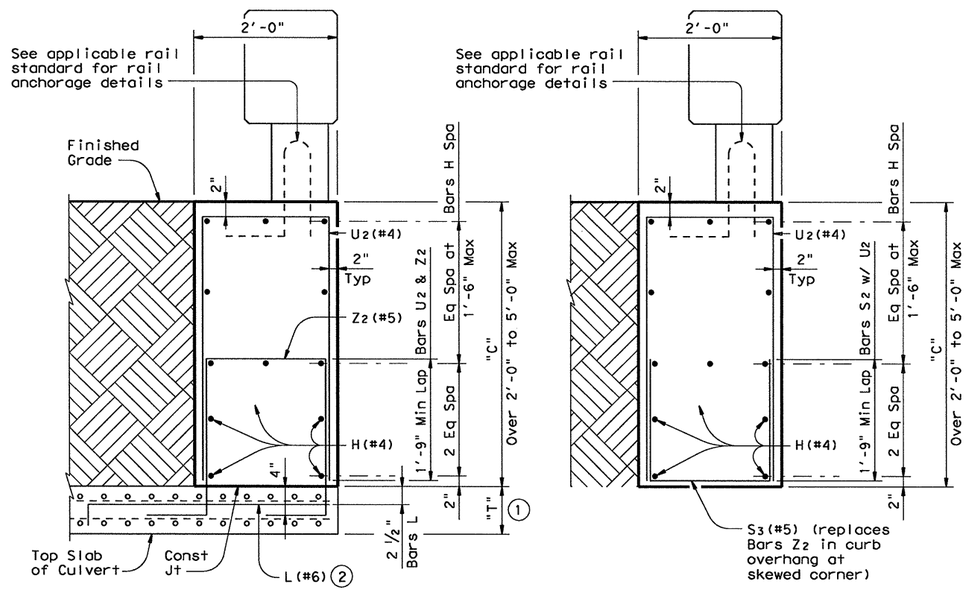

SECTION A-A

SECTION B-B

TYPE 3 CURB

Used for curbs over 2'-0" to 5'-0" (Showing "C"= 4'-0")
Showing T223 Rail, other rails similar. (Bars L on T223 and C223 Rails are not used for this structure.)

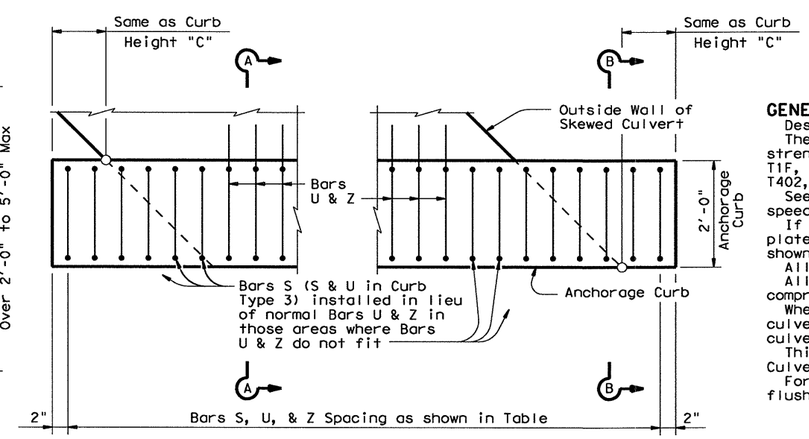

TYPICAL CURB PLAN

Showing typical installation on skewed culvert.
Bar spacing shown is valid for all skews and rails except T101 (see T101 RAIL ANCHORAGE DETAILS).
(Bars L on T223 and C223 Rails are not used for this structure.)

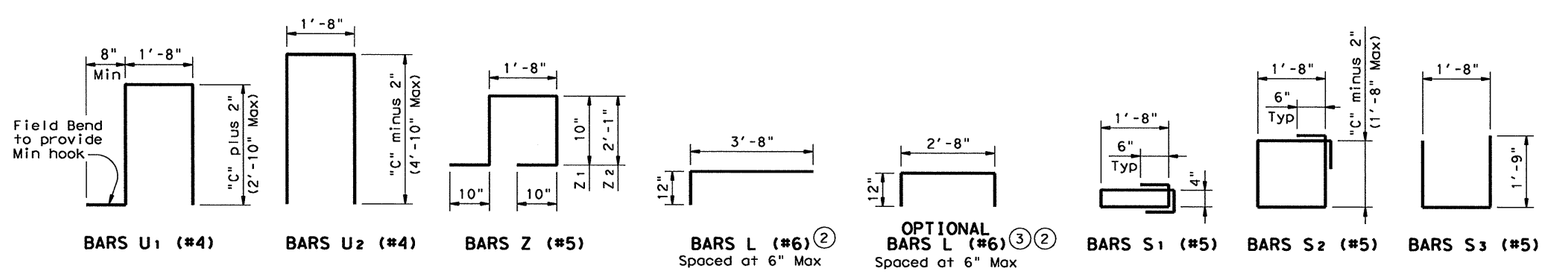

BARS U1 (#4) | BARS U2 (#4) | BARS Z (#5) | BARS L (#6) 2 Spaced at 6" Max | OPTIONAL BARS L (#6) 3 2 Spaced at 6" Max | BARS S1 (#5) | BARS S2 (#5) | BARS S3 (#5)

TABLE OF REINFORCING SPACING

Curb Height "C"	Section Type	Bars S, U, & Z Spa
8" to 9"	1	12"
Over 9" to 2'-0"	2	9"
Over 2'-0" to 3'-0"	3	7"
Over 3'-0" to 5'-0"	3	5"

TABLE OF ESTIMATED QUANTITIES 4

Curb Height "C"	Section Type	Reinf Steel (Lb/LF)	Class "C" Concrete (CY/LF)
8"	1	21.2	0.049
9"	1	21.2	0.056
1'-0"	2	29.1	0.074
1'-6"	2	30.0	0.111
2'-0"	2	30.9	0.148
3'-0"	3	42.5	0.222
4'-0"	3	55.8	0.296
5'-0"	3	59.0	0.370

1 "T" is equal to the culvert top slab thickness. For Precast Boxes with slabs less than 7", see SCP-MD Standard for additional details.

2 Tilt Bars L hook as necessary to maintain cover.

3 Optional Bars L are to be used only for Precast Box Culverts with 3'-0" closure pours.

4 Quantities shown are for Contractor's information only. Quantities are per Linear Foot of curb length. The values for each section type in table can be interpolated for intermediate values of Curb Height, "C".

GENERAL NOTES:

Designed according to AASHTO LRFD Specifications.
The rail anchorage curb details have sufficient strength for use with the following rail types: T1F, T1W, T101, C1W, T221, C221, T223, C223, T401, T402, C402, T411, C411, T551, T552 and SSTR.
See appropriate rail standard for approved design speed restrictions, notes and details not shown.
If attaching the T101 rail, note that the anchor plates shown on this sheet replace the anchor plates shown on the T101 standard.
All reinforcing steel must be Grade 60.
All concrete must be Class "C" with a minimum compressive strength of 3,600 psi.
When using this anchorage curb, omit normal culvert curb reinforcing bars K and H shown on the culvert standard sheets.
This anchorage curb is considered part of the Box Culvert for payment.
For vehicle safety, the top of the curb must be flush with the finished grade.

SPECIAL NOTE:

These details are for use with curbs that are 8" to 5'-0" tall only. Curb heights that are less than or greater than those shown will require special design.

SHEET 1 OF 2

Texas Department of Transportation
Bridge Division

RAIL ANCHORAGE CURB
BOX CULVERT
RAIL MOUNTING DETAILS
(CURBS 8" TO 5'-0" TALL ONLY)

RAC

FILE: racste01.dgn	DN: GAF	CK: TxDOT	DW: TxDOT	CK: GAF
© TxDOT February 2010	DISTRICT	STATE PROJECT NO.		SHEET
REVISIONS	DAL	(SEE TITLE SHEET)		216
	COUNTY	CONTROL	SECT	JOB	HIGHWAY
	COLLIN	0091	04	055	SH 289

DISCLAIMER: The use of this standard is governed by the "Texas Engineering Practice Act". No warranty of any kind is made by TxDOT for any purpose whatsoever. TxDOT assumes no responsibility for the conversion of this standard to other formats or for incorrect results or damages resulting from its use.

ACC:
LEVELS
1:1

R-201104-01

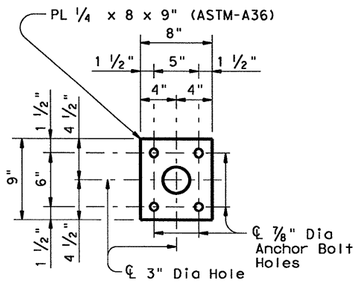

BOTTOM ANCHORAGE PLATE

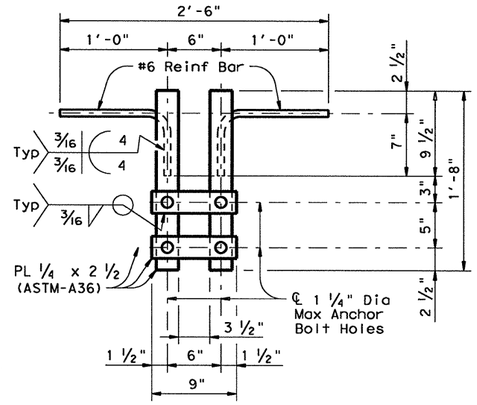

TOP ANCHORAGE PLATE
Showing top plan view

T101 RAIL ANCHOR PLATE DETAILS (6)

(1) "T" is equal to the culvert top slab thickness. For Precast Boxes with slabs less than 7", see SCP-MD Standard for additional details.

(5) Bars G (#5), as identified on the PARALLEL WINGS PW standard sheet, must extend 1'-6" into the Anchorage Curb similar to that shown for a normal culvert curb.

(6) Anchor Plates shown replace anchor plates shown on the T101 standard. Install one anchorage plate assembly at each rail post. Do not galvanize or oil top anchorage plate or bottom anchorage plate.

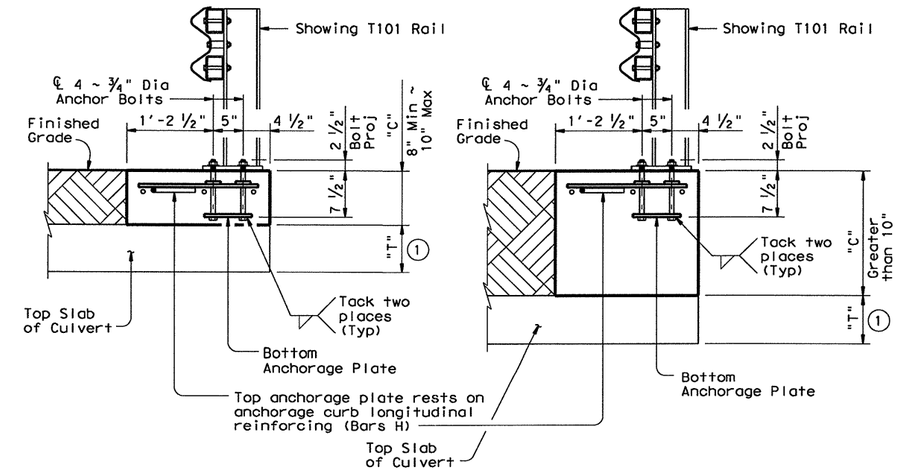

TYPICAL SECTION THRU CURBS 10" OR LESS

TYPICAL SECTION THRU CURBS GREATER THAN 10"

Reinforcing not shown for clarity

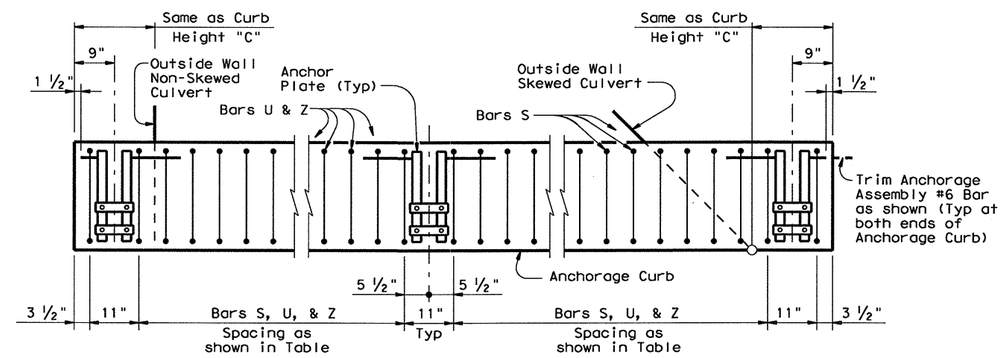

ANCHOR PLATE INSTALLATION PLAN
Also showing placement of bars S, U, and Z in Anchorage Curb
Bar spacing shown is valid for all skews.

T101 RAIL ANCHORAGE DETAILS

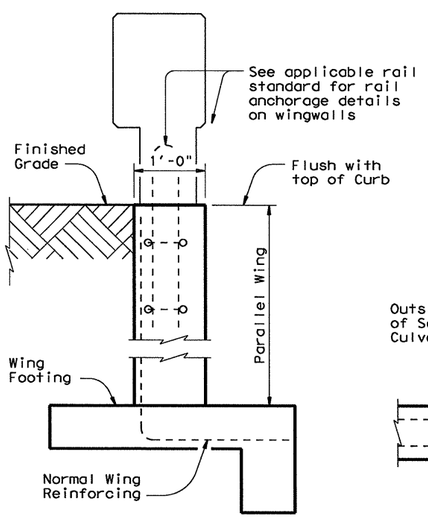

SECTION C-C

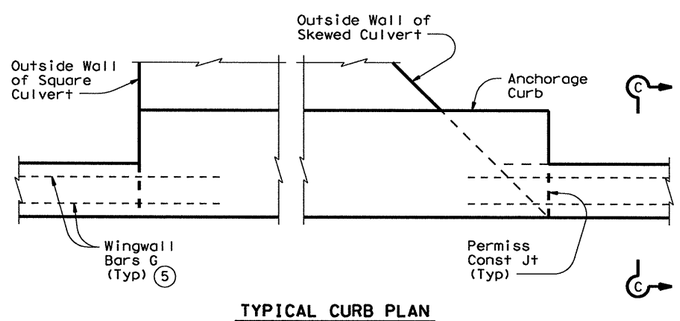

TYPICAL CURB PLAN
Curb reinforcing and footings not shown for clarity

INSTALLATION AT PARALLEL CULVERT WINGWALLS

See culvert wingwall standard for bars and details not shown.

DISCLAIMER:
The use of this standard is governed by the "Texas Engineering Practice Act". No warranty of any kind is made by TxDOT for any purpose whatsoever. TxDOT assumes no responsibility for the conversion of this standard to other formats or for incorrect results or damages resulting from its use.

LEVELS | FED | ACC:

SHEET 2 OF 2

Texas Department of Transportation
Bridge Division

RAIL ANCHORAGE CURB
BOX CULVERT
RAIL MOUNTING DETAILS
(CURBS 8" TO 5'-0" TALL ONLY)

RAC

FILE: racste01.dgn	DN: GAF	CK: TxDOT	DW: TxDOT	CK: GAF	
©TxDOT February 2010	DISTRICT	STATE PROJECT NO.			SHEET
REVISIONS	DAL	(SEE TITLE SHEET)			2/7
	COUNTY		CONTROL	SECT	JOB	HIGHWAY
	COLLIN		0091	04	055	SH 289

R-201104-01

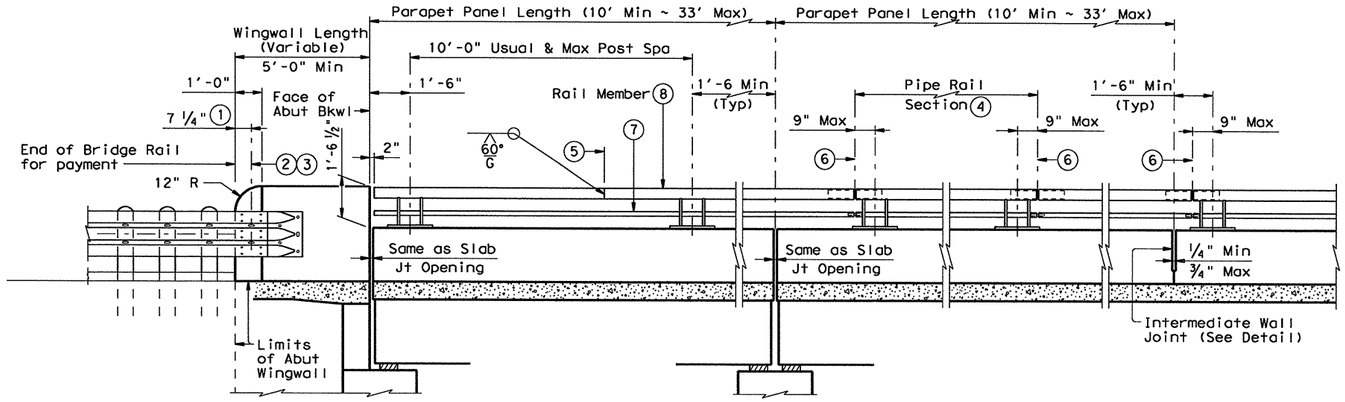

ROADWAY ELEVATION OF RAIL

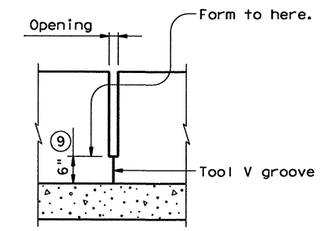

INTERMEDIATE WALL JOINT DETAIL

Note: Provide intermediate wall joints over all slab construction joints, over interior supports on continuous units, and at equal intervals in between as necessary to maintain a 33' maximum length of unbroken wall. Location independent of pipe rail splices.

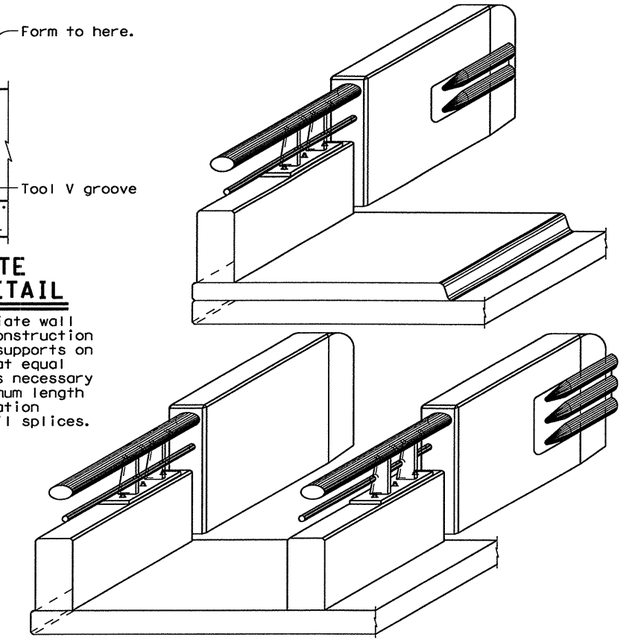

ISOMETRIC VIEWS AT END OF BRIDGE

(Rail Member showing Elliptical Tube Option, Rectangular Tube Option similar).

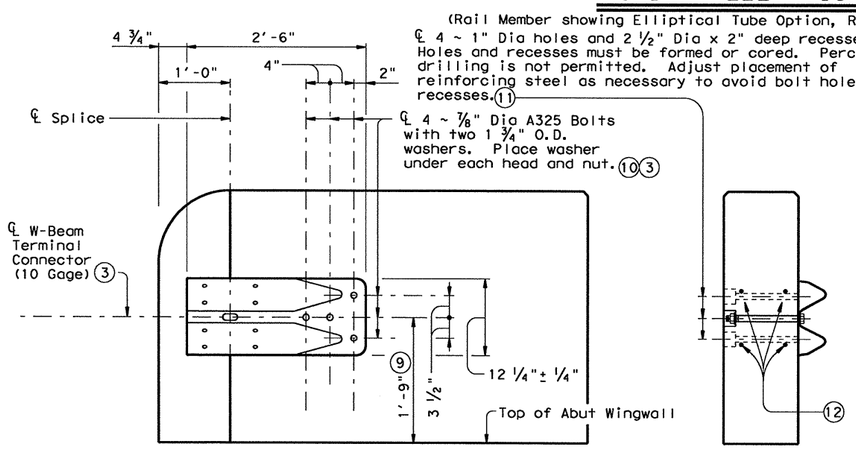

TL-2 TERMINAL CONNECTION DETAILS

(Rail Member showing Elliptical Tube Option, Rectangular Tube Option similar).

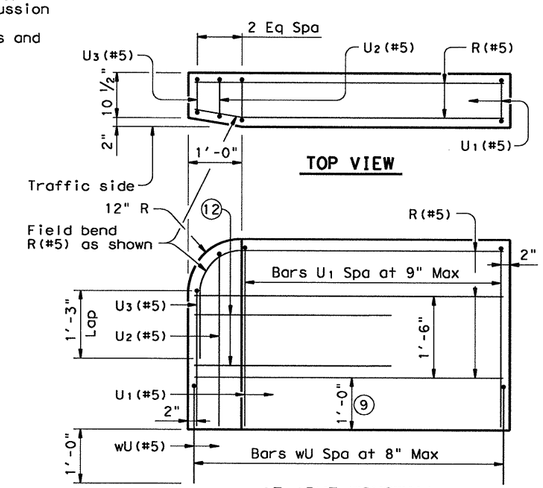

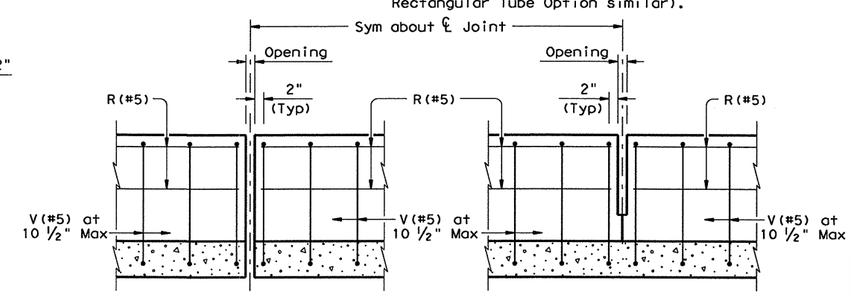

ELEVATION SHOWING TYPICAL REINFORCING PLACEMENT

(Showing without raised sidewalk)

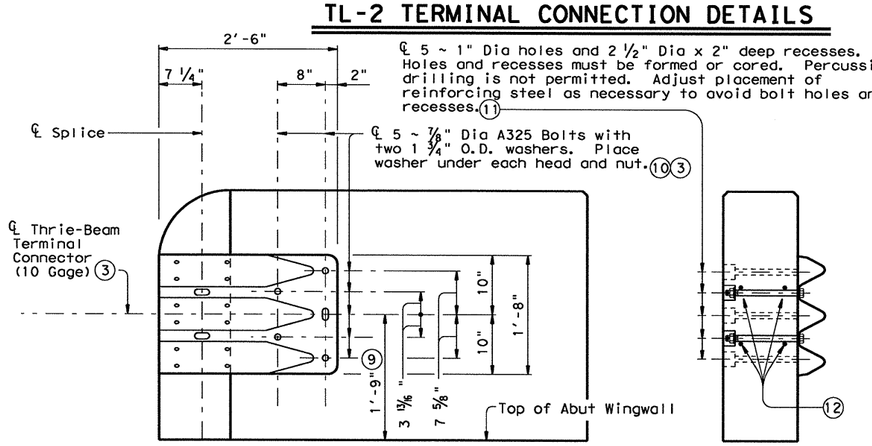

TL-3 TERMINAL CONNECTION DETAILS

1. Showing TL-3 Splice location, TL-2 Splice location is 1'-0".
2. ℄ Splice ~ Metal Beam Guard Fence Transitions must be attached to the bridge rail and extended along the embankment unless otherwise shown in the plans.
3. Terminal Connectors and associated hardware are to be paid for under the item "Metal Beam Guard Fence".
4. Pipe rail sections must have at least two posts but not more than four.
5. One shop splice per pipe rail section is permitted with minimum 85 percent penetration. The weld may be square groove or single vee groove. Grind smooth.
6. ℄ Exp Jt or Splice Jt as required.
7. 2" Dia Std Pipe (2.375" O.D., 0.154" wall thickness) ASTM-A53 Gr B or A500 Gr B. Placed on sidewalk side of rail.
8. Unless directed otherwise by the Engineer, the fabricator may use the rectangular tube in lieu of the elliptical tube for the rail member.
9. Increase 2" for structures with overlay.
10. Bolts must be of sufficient length to extend 1/2" to 3/4" beyond nut.
11. Bolt recesses are only required when pedestrian sidewalks are adjacent to back of rail.
12. 4 additional Bars R(#5) 3'-8" in length shall be placed inside Bars U(#5) and centered 2'-0" from end of rail when Terminal Connections are required. Field bend as needed.

DISCLAIMER:
The use of this standard is governed by the "Texas Engineering Practice Act". No warranty of any kind is made by TxDOT for any purpose whatsoever. TxDOT assumes no responsibility for the conversion of this standard to other formats or for incorrect results or damages resulting from its use.

ACC:
MED
LEVELS

SHEET 1 OF 4

Texas Department of Transportation
Bridge Division

COMBINATION RAIL

TYPE C402

FILE: ristd020.dgn	DN: TxDOT	CK: TxDOT	DW: JTR	CK: JMH	
©TxDOT April 2009	DISTRICT	STATE PROJECT			SHEET
REVISIONS	18	(SEE TITLE SHEET)			218
	COUNTY		CONTROL	SECT	JOB	HIGHWAY
	COLLIN		0091	04	55	SH 289

R-201104-01

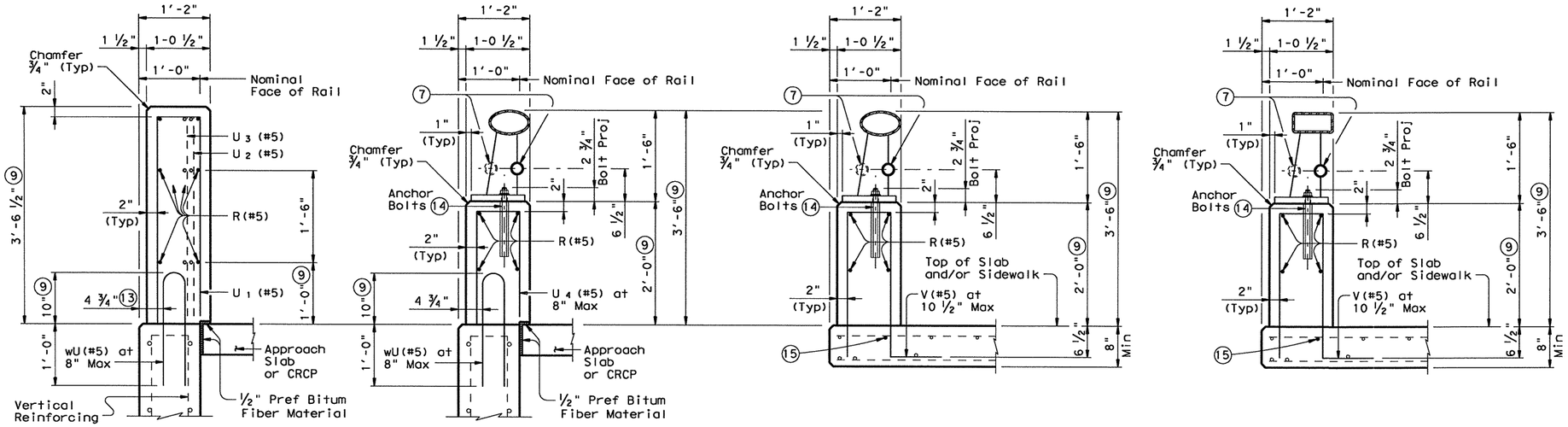

ON ABUTMENT WINGWALLS OR CIP RETAINING WALLS

ON CIP RETAINING WALLS
(Showing Elliptical Tube Option)

ON BRIDGE SLAB
(Showing Elliptical Tube Option)

ON BRIDGE SLAB
(Showing Rectangular Tube Option)

SECTIONS THRU RAIL WITHOUT RAISED SIDEWALK (8)

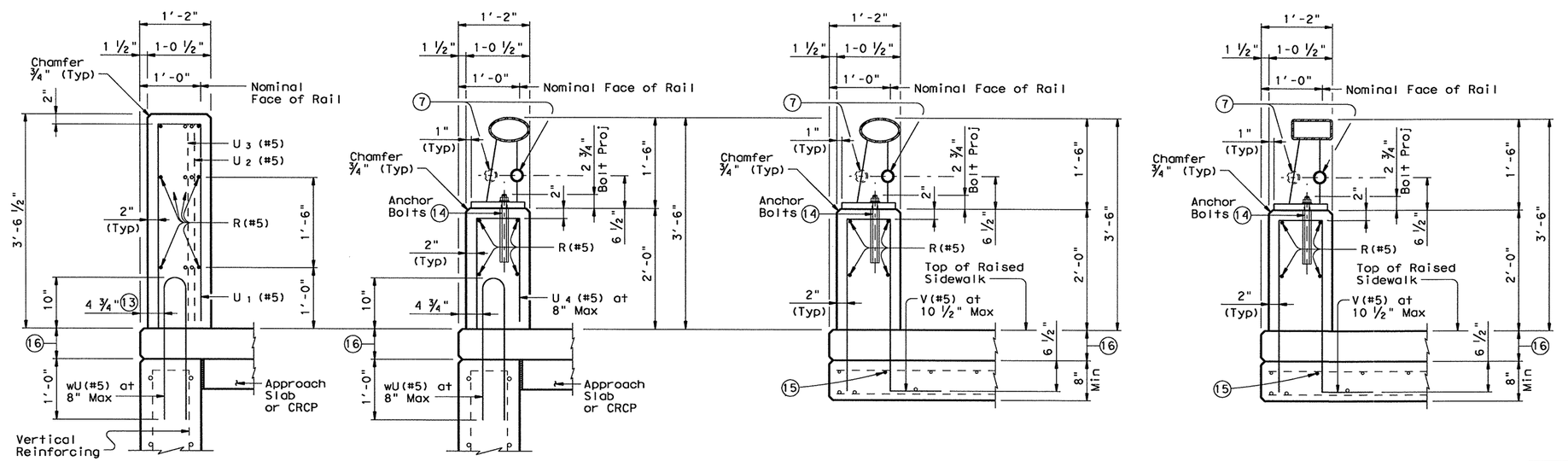

ON ABUTMENT WINGWALLS OR CIP RETAINING WALLS

ON CIP RETAINING WALLS
(Showing Elliptical Tube Option)

ON BRIDGE SLAB
(Showing Elliptical Tube Option)

ON BRIDGE SLAB
(Showing Rectangular Tube Option)

SECTIONS THRU RAIL WITH RAISED SIDEWALK (8)

(7) 2" Dia Std Pipe (2.375" O.D., 0.154" wall thickness) ASTM-A53 Gr B or A500 Gr B. Placed on sidewalk side of rail.

(8) Unless directed otherwise by the Engineer, the fabricator may use the rectangular tube in lieu of the elliptical tube for the rail member.

(9) Increase 2" for structures with overlay.

(13) 5 ½" when vertical reinforcing has closer clear cover over horizontal reinforcing in abutment wingwalls or retaining walls on traffic side of wall.

(14) See "General Notes" for anchor bolt information.

(15) Top longitudinal slab bar may be adjusted laterally 3" plus or minus to tie reinforcing.

(16) Raised Sidewalk

DISCLAIMER:
The use of this standard is governed by the "Texas Engineering Practice Act". No warranty of any kind is made by TxDOT for any purpose whatsoever. TxDOT assumes no responsibility for the conversion of this standard to other formats or for incorrect results or damages resulting from its use.

ACC:
MED:
LEVELS: 1

SHEET 2 OF 4

Texas Department of Transportation
Bridge Division

COMBINATION RAIL

TYPE C402

FILE: rlstd020.dgn	DN: TxDOT	CK: TxDOT	DW: JTR	CK: JMH	
©TxDOT April 2009	DISTRICT	STATE PROJECT			SHEET
REVISIONS	18	(SEE TITLE SHEET)			219
	COUNTY		CONTROL	SECT	JOB	HIGHWAY
	COLLIN		0091	04	55	SH 289

R-201104-01

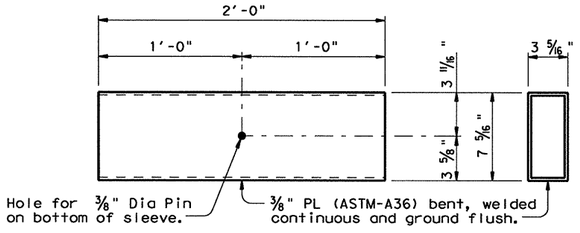

PLAN END VIEW

RECTANGULAR TUBE SLEEVE MEMBER DETAIL

(See Tube Fabrication Detail)

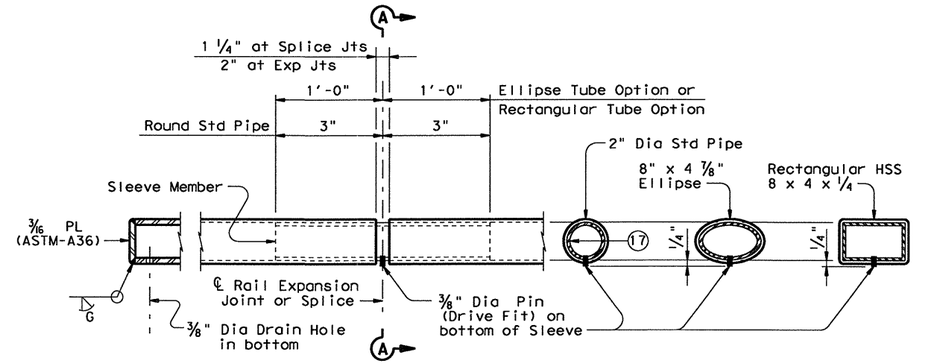

AT RAIL ENDS | AT SPLICE OR EXP JTS | SECTION A-A (Showing Round Std Pipe) | SECTION A-A (Showing Ellipse Tube Option) | SECTION A-A (Showing Rectangular Tube Option)

TUBE FABRICATION DETAILS ⑧

ELLIPTICAL TUBE & ELLIPTICAL SLEEVE MEMBER		
8" x 4 7/8" Ellipse	Elliptical Sleeve Member	
Material	Material	Thickness
6" Dia Std Pipe ASTM-A53 E or S Gr B)	ASTM-A53 Gr B	0.353"
	A36 or A500 Gr B	0.339"
	API-5LX52	0.224"
6 5/8" O.D. Pipe x 0.188" API-5LX52	ASTM-A53 Gr B	0.339"
	A36 or A500 Gr B	0.325"
	API-5LX52	0.188"

Notes: Other sections of equal or greater strength are acceptable for elliptical sleeves. The major and minor diameters of the rail member may vary +/- 0.1875" from plan dimension. However, the difference between the outside diameters of the elliptical sleeve and the inside diameters of the rail member must not exceed 0.25 inches.

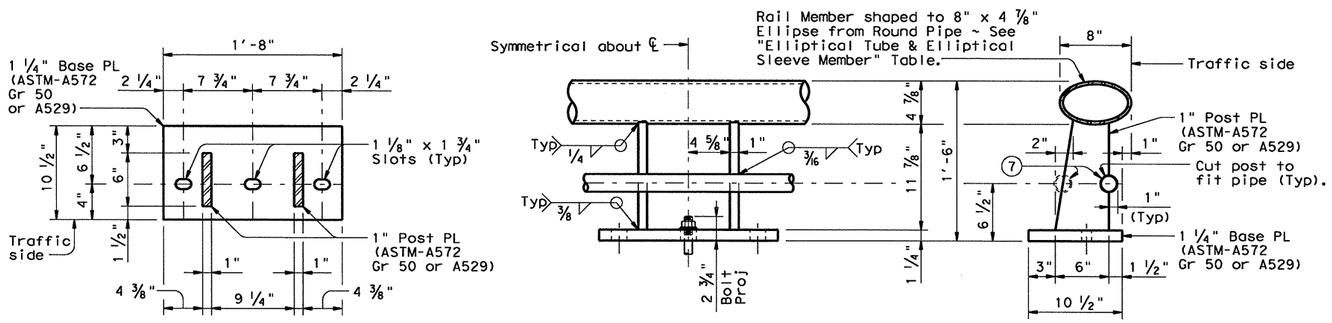

SECTION THRU POST | ELEVATION | SECTION THRU RAIL

ELLIPTICAL TUBE WITH RAIL POST & ANCHORAGE DETAILS

(Showing Elliptical Tube Option)

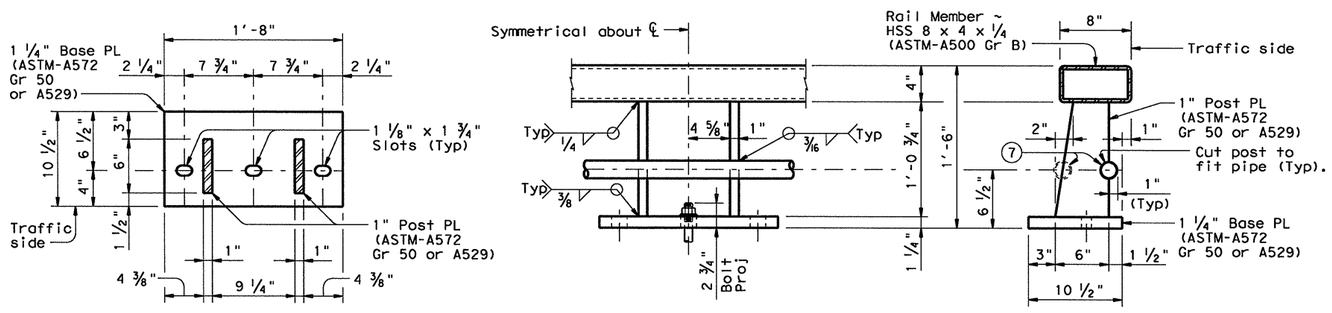

SECTION THRU POST | ELEVATION | SECTION THRU RAIL

RECTANGULAR TUBE WITH RAIL POST & ANCHORAGE DETAILS ⑧

(Showing Rectangular Tube Option)

⑦ 2" Dia Std Pipe (2.375" O.D., 0.154" wall thickness) ASTM-A53 Gr B or A500 Gr B. Placed on sidewalk side of rail.

⑧ Unless directed otherwise by the Engineer, the fabricator may use the rectangular tube in lieu of the elliptical tube for the rail member.

⑰ Sleeve Member 1 1/2" Dia Std Pipe (1.90" O.D., 0.145" wall thickness) ASTM-A53 Gr B or A500 Gr B.

SHEET 3 OF 4

Texas Department of Transportation
Bridge Division

COMBINATION RAIL

TYPE C402

FILE: ristd020.dgn	DN: TxDOT	CK: TxDOT	DW: JTR		CK: JMH
©TxDOT April 2009	DISTRICT	STATE PROJECT			SHEET
REVISIONS	18	(SEE TITLE SHEET)			220
	COUNTY		CONTROL	SECT	JOB	HIGHWAY
	COLLIN		0091	04	55	SH 289

DISCLAIMER:
The use of this standard is governed by the "Texas Engineering Practice Act". No warranty of any kind is made by TxDOT for any purpose whatsoever. TxDOT assumes no responsibility for the conversion of this standard to other formats or for incorrect results or damages resulting from its use.

ACC:
AYED
LEVELS
1

R-201104-01

RAIL DATA FOR HORIZONTAL CURVES

	RADIUS TO FACE OF RAIL	MAX CHORD LENGTH	CONSTRUCT OR FABRICATE
Rail Members	Over 2800'	29'-0"	Straight rail sections
	Over 1400' thru 2800'	14'-6"	To required radius (21) or to chords shown
	Over 700' thru 1400'	7'-3"	
	Thru 700'	Zero	To required radius (21)

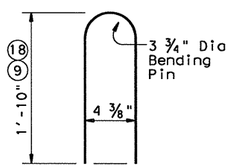

BARS wU(#5)

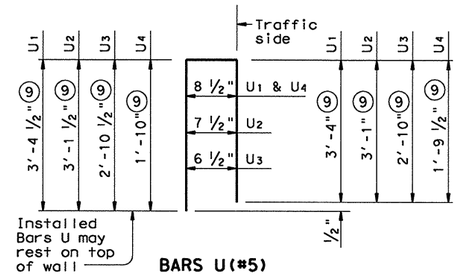

BARS U(#5)

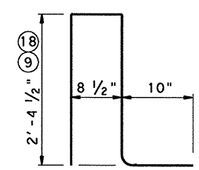

BARS V(#5)

(9) Increase 2" for structures with overlay.

(18) For raised sidewalks, add sidewalk height to total bar height. Use sidewalk height at rail's location.

(19) Slots are not allowed in areas where there is a joint in the concrete parapet between rail post.

(20) See "General Notes" for anchor bolt information.

(21) Shop drawings for approval required for tubular steel sections.

CONSTRUCTION NOTES:

This rail may be slip-formed if approved by the Engineer when epoxy adhesive anchor bolts are used.

Cap all open ends of tubular steel sections.

At the contractor's option anchor bolts may be cast with the parapet (See Cast-in-Place Anchor Bolt Options).

Slip-forming parapet is not allowed if anchor bolts are cast with parapet wall.

Rail parapet must be plumb unless otherwise approved by the Engineer. Steel posts must be square to the top of parapet. Use epoxy mortar under post base plates if gaps larger than 1/16" exist.

Pipe rail sections must have at least two posts but not more than four.

Round or chamfer all exposed edges of steel components 1/16" by grinding prior to galvanizing.

MATERIAL NOTES:

Galvanize all steel components except reinforcing steel.

Anchor bolts must be ⅞" Dia ASTM A193 Grade B7 fully threaded rods with heavy hex nuts, one hardened washer and one (2 ¼" OD) washer each. Embed threaded rods into parapet wall with a Type III Class C epoxy anchorage system. Minimum embedment depth is 8". Anchorage system chosen must be able to achieve an ultimate tensile resistance of 34 kips per bolt. The Contractor must provide evidence to the Engineer that this can be achieved. Evidence of adequate tensile resistance can be based on the manufacturer's published values of ultimate tensile strength (anchor spacing and edge distance must be accounted for). Anchor installation, including hole size, drilling, and clean-out, must be in accordance with the manufacturer's instructions.

Optional cast-in-place anchor bolts must be ⅞" Dia ASTM A325 or A449 bolts (or A193 Gr B7 threaded rods with one tack welded heavy hex nut each) with one heavy hex nut and one hardened steel washer plus one 2 ¼" O.D. steel washer at each bolt. Nuts must conform to A563 requirements.

Use Class "C" concrete. Use Class "C" (HPC) if required elsewhere. Chamfer all exposed corners.

Reinforcing steel must be Grade 60.

Epoxy coat all rail reinforcement if slab bars are epoxy coated.

GENERAL NOTES:

This rail has been evaluated and accepted to be of equal strength to railings with like geometry, which have been crash tested to meet NCHRP Report 350 TL-3 criteria. This rail can be used for design speeds of 50 mph and greater when a TL-3 rated guard fence transition is used. When a TL-2 rated guard fence transition is used, this rail can only be used for design speeds of 45 mph and less.

This railing cannot be used on bridges with expansion joints providing more than 5" movement.

Rail anchorage details shown on this standard may require modification for select structure types. See appropriate details elsewhere in plans for these modifications.

Erection drawings showing panel lengths, rail post spacing, and anchor bolt setting must be submitted to the Engineer for approval.

Average weight of railing with no overlay: 347 plf total
313 plf (Conc)
34 plf (Steel).

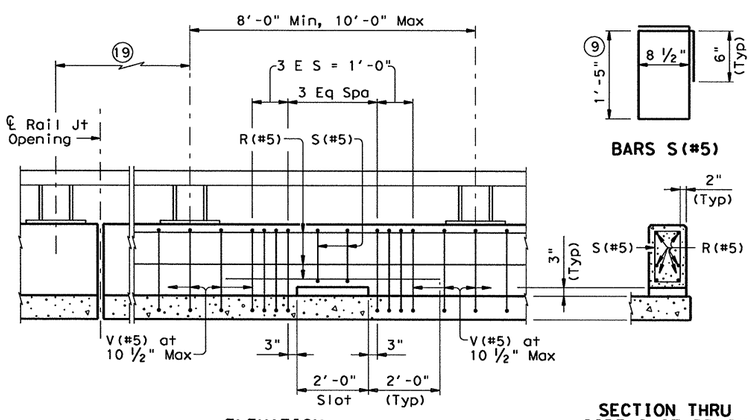

BARS S(#5)

ELEVATION

SECTION THRU SIDE SLOT DRAIN

OPTIONAL SIDE SLOT DRAIN DETAILS

Note: Side Slot Drains must be centered between rail posts within the limits shown. Side Slot Drains may be used where shown elsewhere on the plans or as directed by the Engineer. Drains should not be placed over railroad tracks, lower roadways, or sidewalks. When this rail is used as a separator between a roadway surface and a sidewalk surface, side drain slots will not be permitted.

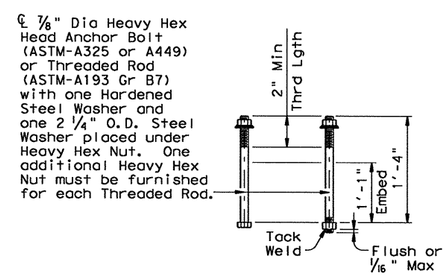

CAST-IN-PLACE ANCHOR BOLT OPTIONS (20)

SHEET 4 OF 4

Texas Department of Transportation
Bridge Division

COMBINATION RAIL

TYPE C402

FILE: ristd020.dgn	DN: TxDOT	CK: TxDOT	DW: JTR	CK: JMH	
© TxDOT April 2009	DISTRICT	STATE PROJECT			SHEET
REVISIONS	18	(SEE TITLE SHEET)			221
	COUNTY		CONTROL	SECT	JOB	HIGHWAY
	COLLIN		0091	04	55	SH 289

DISCLAIMER:
The use of this standard is governed by the "Texas Engineering Practice Act". No warranty of any kind is made by TxDOT for any purpose whatsoever. TxDOT assumes no responsibility for the conversion of this standard to other formats or for incorrect results or damages resulting from its use.

ACC:
AVED
LEVELS
1

R-201104-01

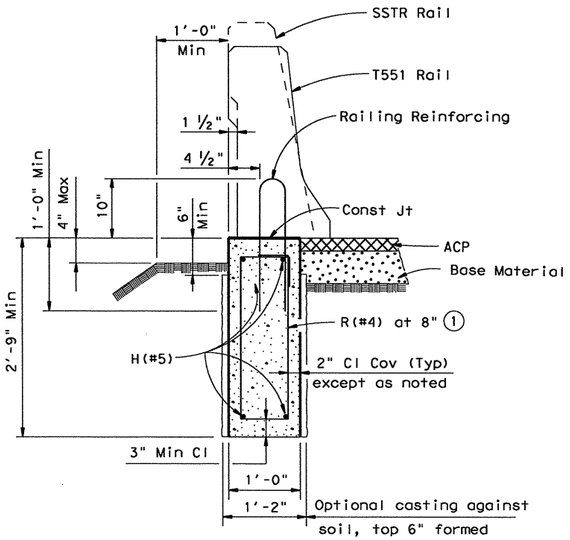

TRAFFIC RAIL FOUNDATION WITH T221, C221, T223, C223, T401, T402, C402, T551, T552 & SSTR RAILS

(Showing T551 & SSTR Rails, other Rails listed similar)
Footing has approximate 0.10 CY per LF of concrete and 10.77 lbs per LF of reinforcement.

① Stirrup hook length is 5". (Typ)

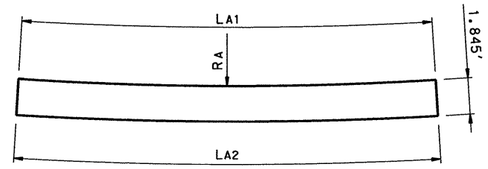

DEVELOPED SURFACE-A

(T551 Type Rail)

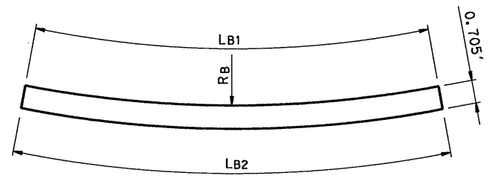

DEVELOPED SURFACE-B

(T551 Type Rail)

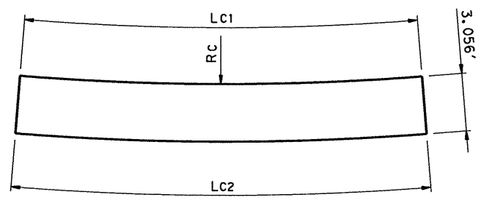

DEVELOPED SURFACE-C

(SSTR Rail)

TABLE OF DEVELOPED SURFACES DIMENSIONS FOR θ = 90°									
Reference Radius RR (ft) to back of Rail	T551 TYPE RAILS						SSTR RAIL		
	Radius	Arc Length		Radius	Arc Length		Radius	Arc Length	
	RA ft	LA1 ft	LA2 ft	RB ft	LB1 ft	LB2 ft	RC ft	LC1 ft	LC2 ft
10	95.76	16.99	17.31	19.63	17.31	17.93	55.66	16.69	17.61
15	140.04	24.84	25.17	28.54	25.17	25.79	81.86	24.54	25.46
20	184.32	32.69	33.02	37.44	33.02	33.64	108.05	32.40	33.31
25	228.60	40.55	40.87	46.35	40.87	41.50	134.25	40.25	41.17
30	272.88	48.40	48.73	55.25	48.73	49.35	160.44	48.11	49.02

RA = 8.8560 (RR+0.813') RB = 1.7811 (RR+1.021') RC = 5.2389 (RR+0.625')

LA1 = 1.5708 (RR+0.813') LB1 = 1.5708 (RR+1.021') LC1 = 1.5708 (RR+0.625')

LA2 = 1.5708 (RR+1.021') LB2 = 1.5708 (RR+1.417') LC2 = 1.5708 (RR+1.208')

The linear ratio may be used to obtain the above arc length dimensions for included θ angles other than 90°. The dimensions are intended as an aid in constructing forms for curved SSTR & Type T551 Railing.

Example: For RR = 10' & 80° ~ LA1 = 16.99 (8/9)

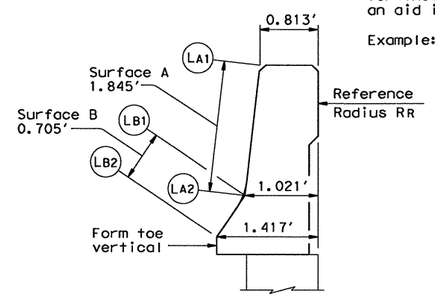

SECTION A-A

(T551 Type Rails)

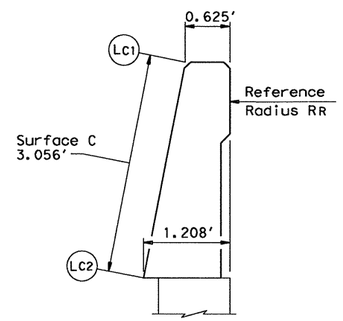

SECTION A-A

(SSTR Rail)

DESIGN GUIDANCE:
The use of curved rail sections at bridge ends must be appropriate for the design speed and site conditions.

MATERIAL NOTES:
Use Class "C" concrete. Use Class "C" (HPC) if required elsewhere.
All reinforcing must be Grade 60.

GENERAL NOTES:
The foundations indicated are suitable for mounting typical concrete bridge barrier type railings. The design resistance is based on the current AASHTO bridge railing requirements with the assumption of fair to good soil support conditions. Poor soil conditions will require suitably deeper foundations.
See Railing standards for details not shown.
The primary use of the curved railing detail is to avoid the necessity of curved MBGF at the ends of bridges adjacent to grade intersections.
This detail is intended for use as a guide to unusual railing anchorage situations but may be included in the plans, modified as necessary to apply to specific installations required on the project.
Payment for railing foundations will be by CY of Class "C" or Class "C" (HPC) concrete.
The associated bridge railing will be paid for by the linear foot which includes the concrete and reinforcement.
Excavation will be considered subsidiary to other Items.

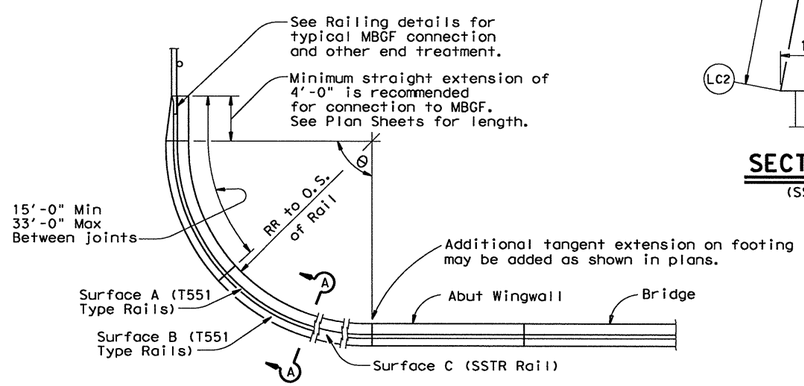

CURVED T551 & SSTR TYPE RAILING AT BRIDGE ENDS

Texas Department of Transportation
Bridge Division

TRAFFIC RAIL FOUNDATION AND MISCELLANEOUS DETAILS

TRF

FILE: ristd027.dgn	DN: TxDOT	CK: MPM	DW: JTR	CK: TxDOT		
©TxDOT April 2009	DISTRICT	STATE PROJECT NO.				SHEET
REVISIONS	DAL	(SEE TITLE SHEET)				222
	COUNTY		CONTROL	SECT	JOB	HIGHWAY
	COLLIN		0091	04	055	SH 289

DISCLAIMER: The use of this standard is governed by the "Texas Engineering Practice Act". No warranty of any kind is made by TxDOT for any purpose whatsoever. TxDOT assumes no responsibility for the conversion of this standard to other formats or for incorrect results or damages resulting from its use.

LEVELS DELETED ACC:

R-201104-01

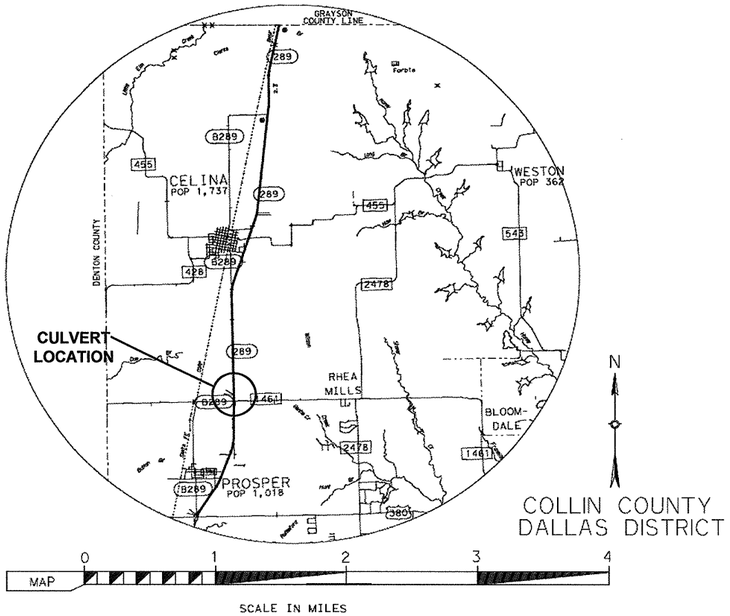

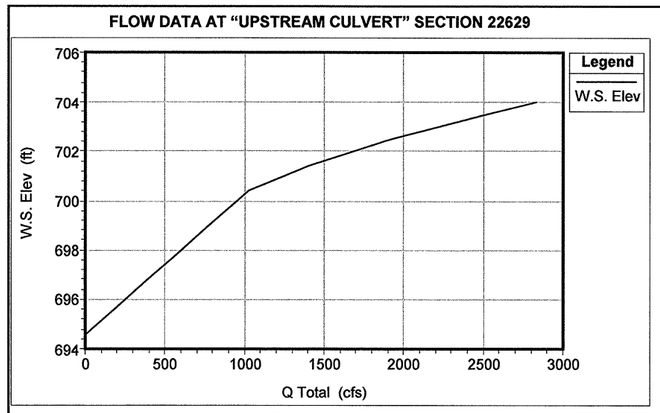

CONVEYANCE CURVE

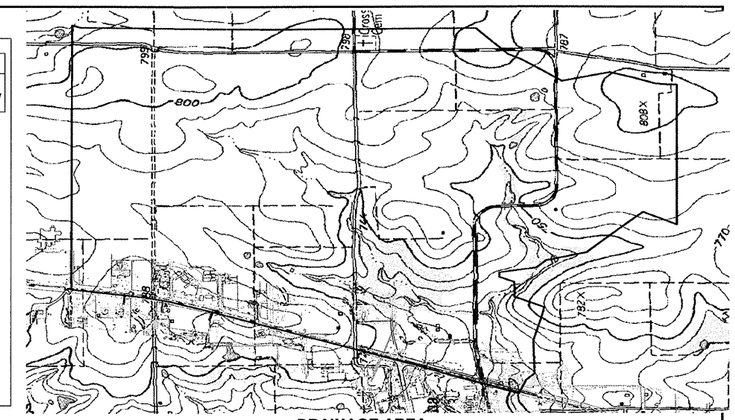

DRAINAGE AREA

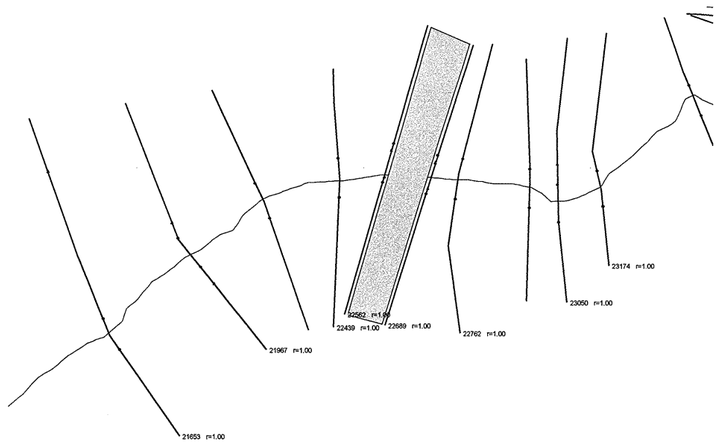

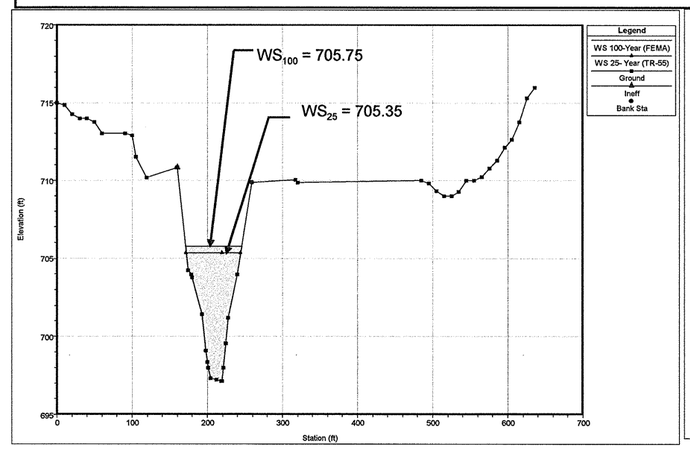

"NATURAL GROUND - UPPER REACH1 " SECTION - STA. 23174

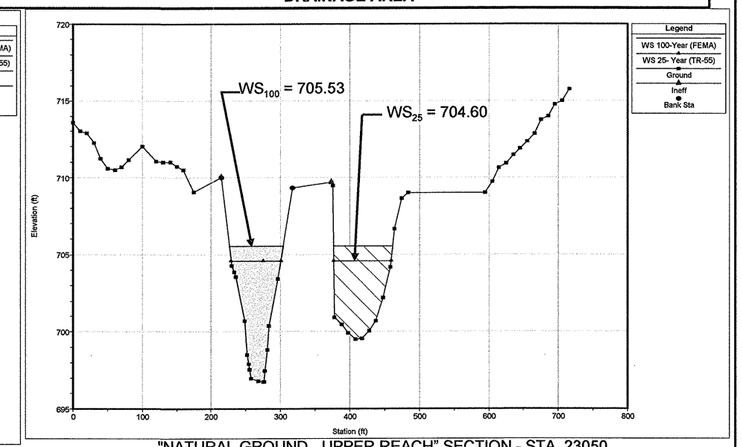

"NATURAL GROUND - UPPER REACH" SECTION - STA. 23050

	EXIST. WATERWAY BELOW ELEV. 705.31 (25 YR)			PROP. WATERWAY BELOW ELEV. 705.35 (25 YR)			EXIST. WATERWAY BELOW ELEV. 706.91 (FEMA 100 YR)			PROP. WATERWAY BELOW ELEV. 705.35 (FEMA 100 YR)		
	LOB	CH	ROB	LOB	CH	ROB	LOB	CH	ROB	LOB	CH	ROB
AREA	124	124	136	124	124	136	124	124	136	124	124	136
W.P.	-	74.85	-	-	76.43	-	-	77.36	-	-	81.21	-
N	-	0.070	-	-	0.070	-	-	0.070	-	-	0.070	-
VEL.	-	4.32	-	-	4.07	-	-	2.76	-	-	2.41	-
Q	-	1402	-	-	1402	-	-	981	-	-	981	-
	Q TOTAL = 1402 V AVG. = 4.87			Q TOTAL = 1402 V AVG. = 4.07			Q TOTAL = 981 V AVG. = 2.76			Q TOTAL = 981 V AVG. = 2.41		

	EXIST. WATERWAY BELOW ELEV. 704.51 (25 YR)			PROP. WATERWAY BELOW ELEV. 704.60 (25 YR)			EXIST. WATERWAY BELOW ELEV. 705.51 (100 YR)			PROP. WATERWAY BELOW ELEV. 705.53 (100 YR)		
	LOB	CH	ROB	LOB	CH	ROB	LOB	CH	ROB	LOB	CH	ROB
AREA	-	311.92	-	-	344.92	-	-	386.05	-	-	444.90	-
W.P.	-	73.94	-	-	76.84	-	-	80.29	-	-	85	-
N	-	0.070	-	-	0.070	-	-	0.070	-	-	0.070	-
VEL.	-	4.50	-	-	4.06	-	-	2.54	-	-	2.21	-
Q	-	1402	-	-	1402	-	-	981	-	-	981	-
	Q TOTAL = 1864 V AVG. = 2.38			Q TOTAL = 1402 V AVG. = 4.06			Q TOTAL = 981 V AVG. = 1.73			Q TOTAL = 981 V AVG. = 2.21		

NOTES:

1. CHANNEL CROSS SECTIONS NORMAL TO FLOW.
2. CHANNEL STATIONING FROM LEFT TO RIGHT LOOKING DOWNSTREAM.
3. HYDRAULIC CALCULATIONS PERFORMED FEBRUARY 2010 USING HEC-RAS V. 4.0.
4. DRAINAGE AREA TAKEN FROM USGS 7.5-MINUTE TOPOGRAPHIC QUAD MAPS.
5. ALL ELEVATIONS ARE IN FEET AND ALL FLOWS ARE IN CFS UNLESS OTHERWISE NOTED.
6. VERTICAL DATUM IS NAVD88.
7. COORDINATION WITH THE LOCAL FLOODPLAIN ADMINISTRATOR FOR CELINA WAS COMPLETED ON 8-9-10
8. A STARTING WATER SURFACE ELEVATION WAS USED FOR THE 100-YEAR BASE FLOOD FROM THE FEMA EFFECTIVE MODEL.

WIN TR-55 ANALYSIS		COMPUTED FLOWS (CFS)
DRAINAGE AREA	1.29 SQ. MI.	* Q25 = 1402
* DESIGN DISCHARGE		FEMA Q100 = 1930

STATE OF TEXAS
NICHOLAS VON SPENCER
93702
LICENSED
PROFESSIONAL ENGINEER
4-8-11

Texas Department of Transportation
© 2011

DOE BRANCH HYDRAULIC DATA

SCALE: AS SHOWN — SHEET 1 OF 3

DESIGN NVS	FED.RD. DIV.NO.	STATE PROJECT NO.		HIGHWAY NO.
GRAPHICS NVS	6	(SEE TITLE SHEET)		SH 289
	STATE	DISTRICT	COUNTY	SHEET NO.
CHECK NVS	TEXAS	DALLAS	COLLIN	223
CHECK	CONTROL	SECTION	JOB	
	0091	04	055	

PROP. MODEL CROSS SECTIONS SHOWN AREA = FLOW AREA (SQ. FT.) W.P. = WETTED PERIMETER (FT.) N = COEFFICIENT OF ROUGHNESS VEL. = VELOCITY (FT/S) Q = DISCHARGE (CFS)

4/8/11 9:07 AM

R-201104-01

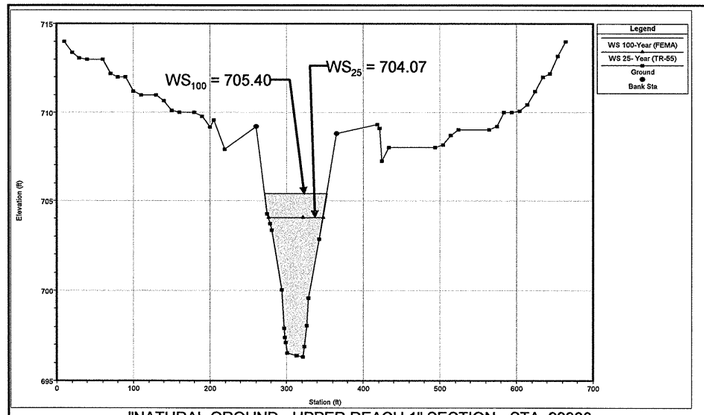

"NATURAL GROUND - UPPER REACH 1" SECTION - STA. 22960

	EXIST. WATERWAY BELOW ELEV. 703.94 (25 YR)			PROP. WATERWAY BELOW ELEV. 704.07 (25 YR)			EXIST. WATERWAY BELOW ELEV. 705.38 (100 YR)			PROP. WATERWAY BELOW ELEV. 705.40 (100 YR)		
	LOB	CH	ROB	LOB	CH	ROB	LOB	CH	ROB	LOB	CH	ROB
AREA	-	316.31	-	-	316.81	-	-	425.82	-	-	491.29	-
W.P.	-	72.78	-	-	78.38	-	-	84.12	-	-	89.62	-
N	-	0.070	-	-	0.070	-	-	0.070	-	-	0.070	-
VEL.	-	4.43	-	-	3.87	-	-	2.30	-	-	2.00	-
Q	-	1402	-	-	1402	-	-	981	-	-	981	-
	Q TOTAL =1402 V AVG. =4.43			Q TOTAL =1402 V AVG. =3.87			Q TOTAL =981 V AVG. =1.43			Q TOTAL =981 V AVG. =2.00		

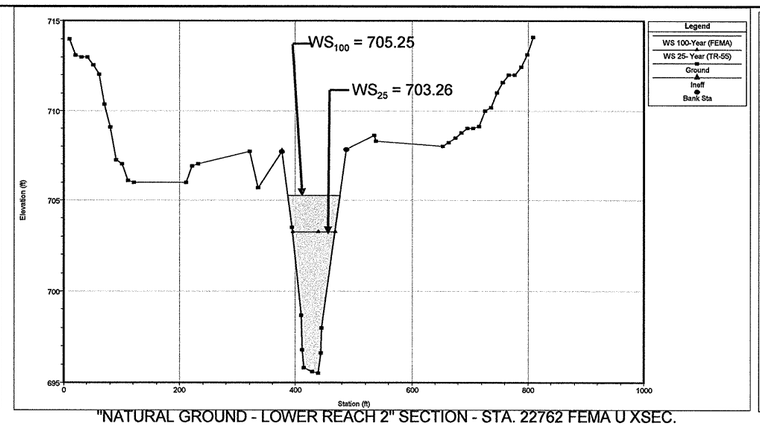

"NATURAL GROUND - LOWER REACH 2" SECTION - STA. 22762 FEMA U XSEC.

	EXIST. WATERWAY BELOW ELEV. 703.05 (25 YR)			PROP. WATERWAY BELOW ELEV. 703.26 (25 YR)			EXIST. WATERWAY BELOW ELEV. 705.23 (100 YR)			PROP. WATERWAY BELOW ELEV. 705.25 (100 YR)		
	LOB	CH	ROB	LOB	CH	ROB	LOB	CH	ROB	LOB	CH	ROB
AREA	-	339.59	-	-	411.45	-	-	514.49	-	7.40	591.98	-
W.P.	-	74.15	-	-	82.14	-	-	93	-	-	100.39	-
N	-	0.060	-	-	0.060	-	-	0.060	-	-	0.060	-
VEL.	-	4.13	-	-	3.41	-	-	1.91	-	-	1.66	-
Q	-	1402	-	-	1402	-	-	981	-	-	981	-
	Q TOTAL = 1402 V AVG. =4.13			Q TOTAL = 1402 V AVG. =3.41			Q TOTAL = 2465 V AVG.= 6.88			Q TOTAL = 981 V AVG. =6.88		

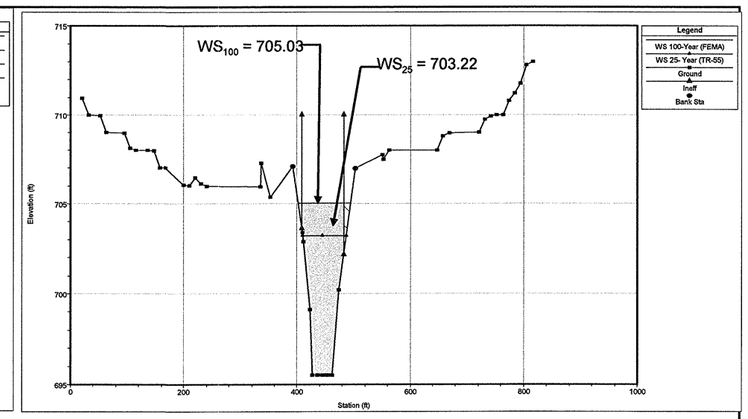

"NATURAL GROUND – LOWER REACH 2" SECTION - STA. 22689

	EXIST. WATERWAY BELOW ELEV. 702.85 (25 YR)			PROP. WATERWAY BELOW ELEV. 703.22 (25 YR)			EXIST. WATERWAY BELOW ELEV. 704.95 (100 YR)			PROP. WATERWAY BELOW ELEV. 705.03 (100 YR)		
	LOB	CH	ROB	LOB	CH	ROB	LOB	CH	ROB	LOB	CH	ROB
AREA	-	376.88	-	-	451.77	-	-	551.05	-	3.62	636.81	-
W.P.	-	73.85	-	-	77.03	-	-	77.03	-	-	77.03	-
N	-	0.060	-	-	0.060	-	-	0.060	-	-	0.060	-
VEL.	-	3.73	-	-	3.10	-	-	3.64	-	-	3.24	-
Q	-	1402	-	-	1402	-	-	1931	-	-	1931	-
	Q TOTAL =1402 V AVG. =3.73			Q TOTAL =1402 V AVG. =3.10			Q TOTAL = 704.95 V AVG. =3.64			Q TOTAL =1931 V AVG. =3.24		

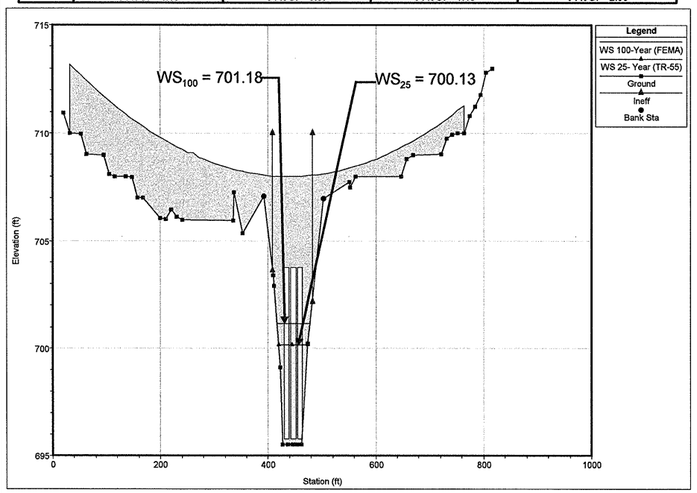

"NATURAL GROUND – LOWER REACH 2" SECTION - STA. 22629 US BRIDGE

	EXIST. WATERWAY BELOW ELEV. 702.85 (25 YR)			PROP. WATERWAY BELOW ELEV. 700.13 (25 YR)			EXIST. WATERWAY BELOW ELEV. 704.95 (100 YR)			PROP. WATERWAY BELOW ELEV. 701.18 (100 YR)		
	LOB	CH	ROB	LOB	CH	ROB	LOB	CH	ROB	LOB	CH	ROB
AREA	-	376.88	-	-	451.77	-	-	551.05	-	3.62	636.81	-
W.P.	-	73.85	-	-	77.03	-	-	77.03	-	-	77.03	-
N	-	0.060	-	-	0.060	-	-	0.060	-	-	0.060	-
VEL.	-	8.51	-	-	12.34	-	-	9.84	-	-	13.73	-
Q	-	1402	-	-	1402	-	-	1931	-	-	1931	-
	Q TOTAL =1402 V AVG. =8.51			Q TOTAL =1402 V AVG. =12.34			Q TOTAL =1931 V AVG. =9.84			Q TOTAL =1931 V AVG. =13.73		

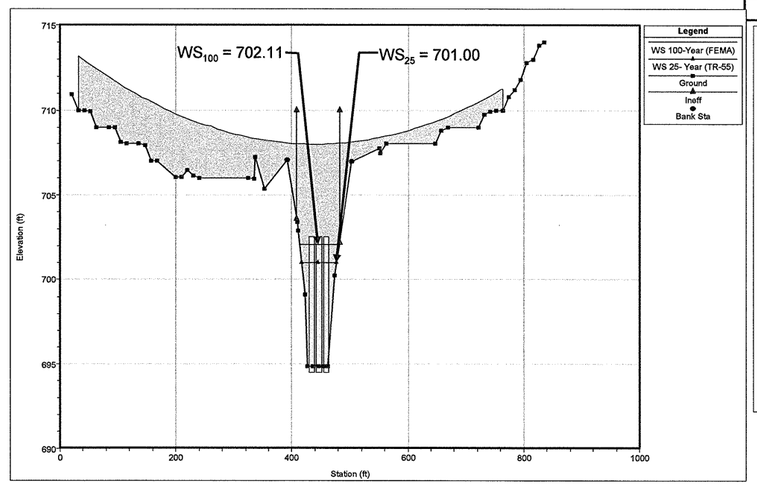

"NATURAL GROUND – LOWER REACH 2" SECTION - STA. 22629 DS BRIDGE

	EXIST. WATERWAY BELOW ELEV. 701.38 (25 YR)			PROP. WATERWAY BELOW ELEV. 701.00 (25 YR)			EXIST. WATERWAY BELOW ELEV. 702.50 (100 YR)			PROP. WATERWAY BELOW ELEV. 702.11 (100 YR)		
	LOB	CH	ROB	LOB	CH	ROB	LOB	CH	ROB	LOB	CH	ROB
AREA	-	376.88	-	-	451.77	-	-	551.05	-	3.62	636.81	-
W.P.	-	73.85	-	-	77.03	-	-	77.03	-	-	77.03	-
N	-	0.060	-	-	0.060	-	-	0.060	-	-	0.060	-
VEL.	-	7.72	-	-	8.52	-	-	9.84	-	-	10.10	-
Q	-	1402	-	-	1402	-	-	1931	-	-	1931	-
	Q TOTAL =1402 V AVG. = 7.72			Q TOTAL =1402 V AVG. =8.52			Q TOTAL =1931 V AVG. =9.84			Q TOTAL =1931 V AVG. =10.10		

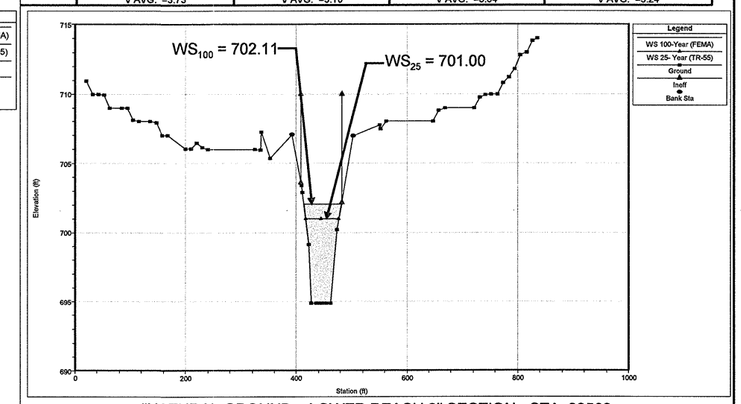

"NATURAL GROUND – LOWER REACH 2" SECTION - STA. 22562

	EXIST. WATERWAY BELOW ELEV. 701.38 (25 YR)			PROP. WATERWAY BELOW ELEV. 701.00 (25 YR)			EXIST. WATERWAY BELOW ELEV. 702.50 (100 YR)			PROP. WATERWAY BELOW ELEV. 702.11(100 YR)		
	LOB	CH	ROB	LOB	CH	ROB	LOB	CH	ROB	LOB	CH	ROB
AREA	-	302.51	-	-	302.51	-	-	377.18	-	-	377.18	-
W.P.	-	66.36	-	-	66.36	-	-	73.35	-	-	73.35	-
N	-	0.060	-	-	0.060	-	-	0.060	-	-	0.060	-
VEL.	-	4.63	-	-	4.63	-	-	5.12	-	-	5.12	-
Q	-	1402	-	-	1402	-	-	1931	-	-	1931	-
	Q TOTAL =1402 V AVG. =4.63			Q TOTAL =1402 V AVG. = 4.63			Q TOTAL = V AVG. =			Q TOTAL =1931 V AVG. =5.12		

NOTES:

1. CHANNEL CROSS SECTIONS NORMAL TO FLOW.
2. CHANNEL STATIONING FROM LEFT TO RIGHT LOOKING DOWNSTREAM.
3. HYDRAULIC CALCULATIONS PERFORMED FEBRUARY 2010 USING HEC-RAS V. 4.0.
4. DRAINAGE AREA TAKEN FROM USGS 7.5-MINUTE TOPOGRAPHIC QUAD MAPS.
5. ALL ELEVATIONS ARE IN FEET AND ALL FLOWS ARE IN CFS UNLESS OTHERWISE NOTED.
6. VERTICAL DATUM IS NAVD88.
7. COORDINATION WITH THE LOCAL FLOODPLAIN ADMINISTRATOR FOR CELINA WAS COMPLETED ON 8-9-10
8. A STARTING WATER SURFACE ELEVATION WAS USED FOR THE 100-YEAR BASE FLOOD FROM THE FEMA EFFECTIVE MODEL.

STATE OF TEXAS
NICHOLAS VON SPENCER
93702
LICENSED
PROFESSIONAL ENGINEER
4-8-11

Texas Department of Transportation
© 2011

DOE BRANCH HYDRAULIC DATA

SCALE: AS SHOWN

SHEET 2 OF 3

DESIGN NVS	FED.RD. DIV.NO.	STATE PROJECT NO.		HIGHWAY NO.
GRAPHICS NVS	6	(SEE TITLE SHEET)		SH 289
	STATE	DISTRICT	COUNTY	SHEET NO.
CHECK NVS	TEXAS	DALLAS	COLLIN	224
CHECK	CONTROL	SECTION	JOB	
	0091	04	055	

4/8/11 9:07 AM

R-201104-01

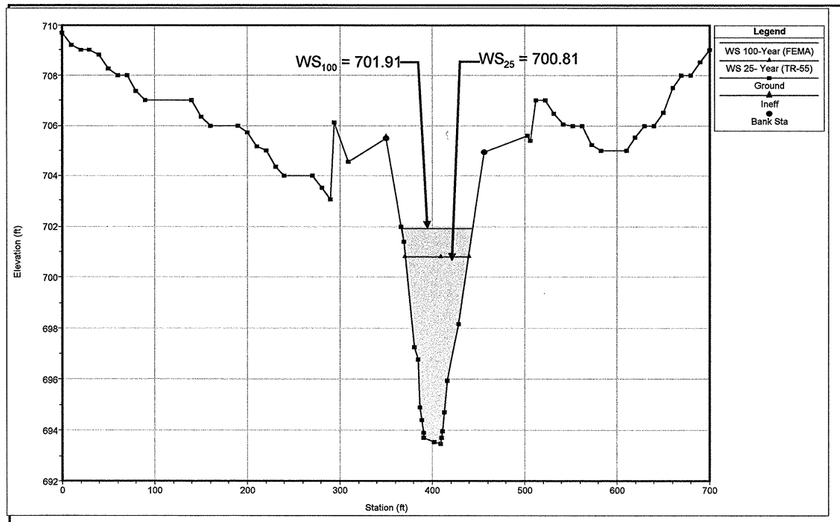

"NATURAL GROUND – LOWER REACH 2" SECTION - STA. 22439 FEMA T XSEC.

	EXIST. WATERWAY BELOW ELEV. 700.81 (25 YR)			PROP. WATERWAY BELOW ELEV. 700.81 (25 YR)			EXIST. WATERWAY BELOW ELEV. 701.91 (100 YR)			PROP. WATERWAY BELOW ELEV. 701.91(100 YR)		
	LOB	CH	ROB	LOB	CH	ROB	LOB	CH	ROB	LOB	CH	ROB
AREA	-	307.09	-	-	307.09	-	-	387.61	-	-	387.61	-
W.P.	-	71.28	-	-	71.28	-	-	79.59	-	-	79.59	-
N	-	0.060	-	-	0.060	-	-	0.060	-	-	0.060	-
VEL.	-	4.57	-	-	4.57	-	-	4.98	-	-	4.98	-
Q	-	1402	-	-	1402	-	-	1931	-	-	1931	-
	Q TOTAL =1402 V AVG. =4.57			Q TOTAL =1402 V AVG. =4.57			Q TOTAL =1931 V AVG. = 4.98			Q TOTAL =1931 V AVG. = 4.98		

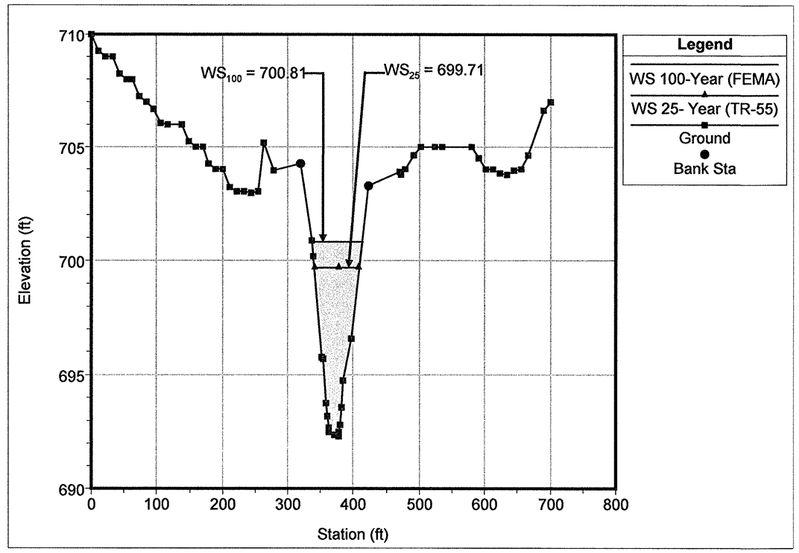

"NATURAL GROUND – LOWER REACH 2" SECTION - STA. 22221

	EXIST. WATERWAY BELOW ELEV. 699.71 (25 YR)			PROP. WATERWAY BELOW ELEV. 699.71(25 YR)			EXIST. WATERWAY BELOW ELEV. 700.81(100 YR)			PROP. WATERWAY BELOW ELEV. 700.81 (100 YR)		
	LOB	CH	ROB	LOB	CH	ROB	LOB	CH	ROB	LOB	CH	ROB
AREA	-	302.20	-	-	302.20	-	-	382	-	-	382	-
W.P.	-	71.08	-	-	71.08	-	-	79	-	-	79	-
N	-	0.06	-	-	0.06	-	-	0.060	-	-	0.060	-
VEL.	-	4.63	-	-	4.63	-	-	5.05	-	-	5.05	-
Q	-	1402	-	-	1402	-	-	1931	-	-	1931	-
	Q TOTAL =1402 V AVG. =4.63			Q TOTAL =1402 V AVG. =4.63			Q TOTAL =1931 V AVG. =5.05			Q TOTAL =1931 V AVG. =5.05		

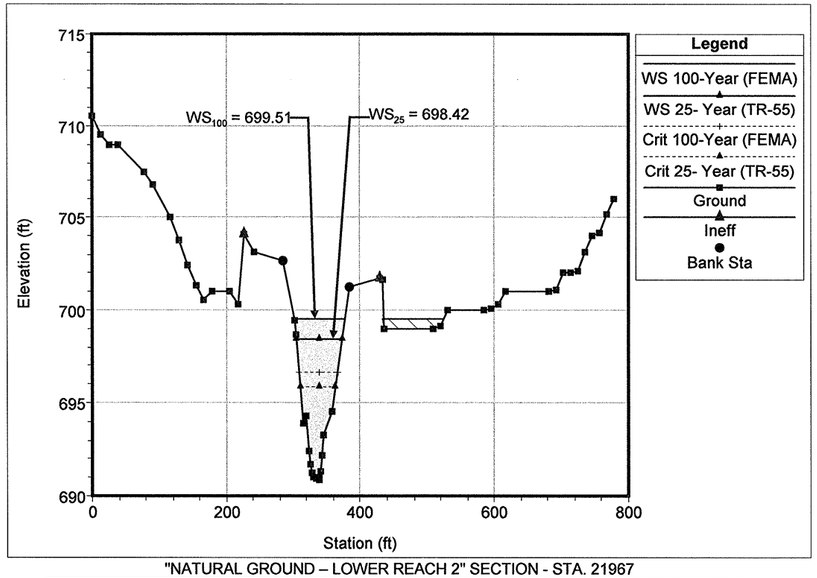

"NATURAL GROUND – LOWER REACH 2" SECTION - STA. 21967

	EXIST. WATERWAY BELOW ELEV. 698.42 (25 YR)			PROP. WATERWAY BELOW ELEV. 698.42 (25 YR)			EXIST. WATERWAY BELOW ELEV. 699.51 (100 YR)			PROP. WATERWAY BELOW ELEV. 699.51(100 YR)		
	LOB	CH	ROB	LOB	CH	ROB	LOB	CH	ROB	LOB	CH	ROB
AREA	-	302.04	-	-	302.04	-	-	380.72	-	-	380.72	-
W.P.	-	71.21	-	-	71.21	-	-	78.85	-	-	78.85	-
N	-	0.060	-	-	0.060	-	-	0.060	-	-	0.060	-
VEL.	-	4.64	-	-	4.64	-	-	5.07	-	-	5.07	-
Q	-	1402	-	-	1402	-	-	1931	-	-	1931	-
	Q TOTAL =1402 V AVG. =4.64			Q TOTAL =1402 V AVG. =4.64			Q TOTAL =1931 V AVG. =5.07			Q TOTAL =1931 V AVG. =5.07		

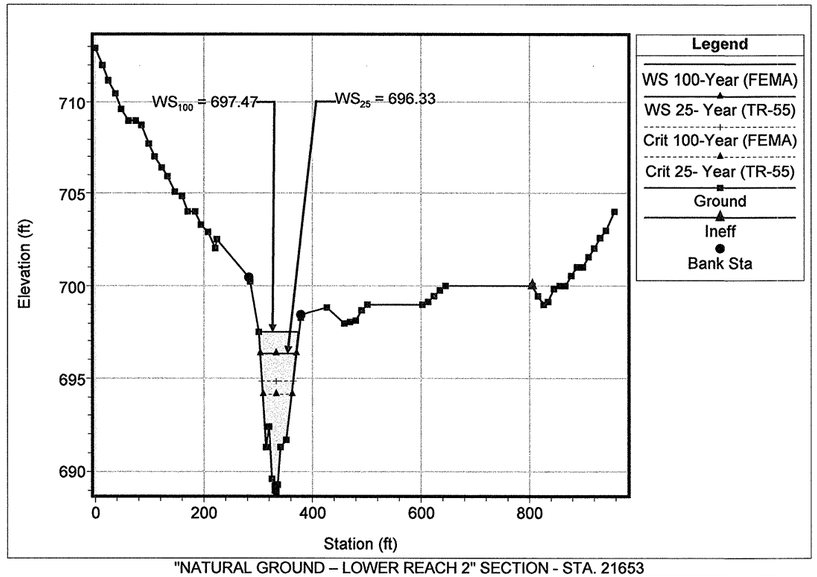

"NATURAL GROUND – LOWER REACH 2" SECTION - STA. 21653

	EXIST. WATERWAY BELOW ELEV. 696.33 (25 YR)			PROP. WATERWAY BELOW ELEV. 696.33 (25 YR)			EXIST. WATERWAY BELOW ELEV. 697.47 (100 YR)			PROP. WATERWAY BELOW ELEV. 697.47 (100 YR)		
	LOB	CH	ROB	LOB	CH	ROB	LOB	CH	ROB	LOB	CH	ROB
AREA	-	281.40	-	-	281.40	-	-	361.49	-	-	361.49	-
W.P.	-	69.25	-	-	69.25	-	-	76.61	-	-	76.61	-
N	-	0.070	-	-	0.070	-	-	0.070	-	-	0.070	-
VEL.	-	4.98	-	-	4.98	-	-	5.34	-	-	5.34	-
Q	-	1402	-	-	1402	-	-	1931	-	-	1931	-
	Q TOTAL =1402 V AVG. =4.98			Q TOTAL =1402 V AVG. =4.98			Q TOTAL =1931 V AVG. =5.34			Q TOTAL =1931 V AVG. =5.34		

NOTES:

1. CHANNEL CROSS SECTIONS NORMAL TO FLOW.
2. CHANNEL STATIONING FROM LEFT TO RIGHT LOOKING DOWNSTREAM.
3. HYDRAULIC CALCULATIONS PERFORMED FEBRUARY 2010 USING HEC-RAS V. 4.0.
4. DRAINAGE AREA TAKEN FROM USGS 7.5-MINUTE TOPOGRAPHIC QUAD MAPS.
5. ALL ELEVATIONS ARE IN FEET AND ALL FLOWS ARE IN CFS UNLESS OTHERWISE NOTED.
6. VERTICAL DATUM IS NAVD88.
7. COORDINATION WITH THE CELINA LPFA WAS USED.
8. A STARTING WATER SURFACE ELEVATION WAS USED FOR THE 100-YEAR BASE FLOOD FROM THE FEMA EFFECTIVE MODEL.

STATE OF TEXAS
NICHOLAS VON SPENCER
93702
LICENSED
PROFESSIONAL ENGINEER
4-8-11

Texas Department of Transportation
© 2011

DOE BRANCH HYDRAULIC DATA

SCALE: AS SHOWN — SHEET 3 OF 3

DESIGN NVS	FED.RD. DIV.NO.	STATE PROJECT NO.		HIGHWAY NO.
GRAPHICS	6	(SEE TITLE SHEET)		SH 289
NVS	STATE	DISTRICT	COUNTY	SHEET NO.
CHECK NVS	TEXAS	DALLAS	COLLIN	225
CHECK	CONTROL	SECTION	JOB	
	0091	04	055	

4/8/11 9:07 AM

PROP. MODEL CROSS SECTIONS SHOWN AREA = FLOW AREA (SQ. FT.) W.P. = WETTED PERIMETER (FT.) N = COEFFICIENT OF ROUGHNESS VEL. = VELOCITY (FT/S) Q = DISCHARGE (CFS)

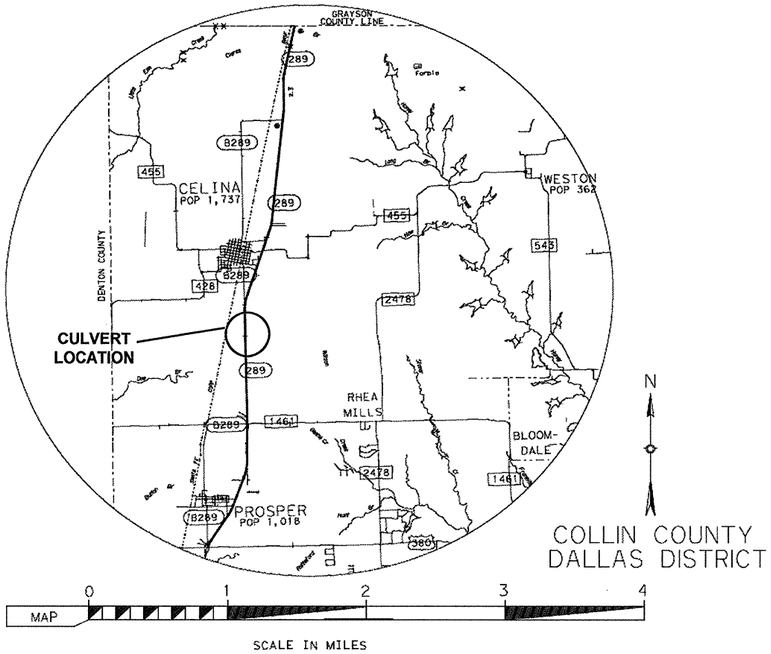

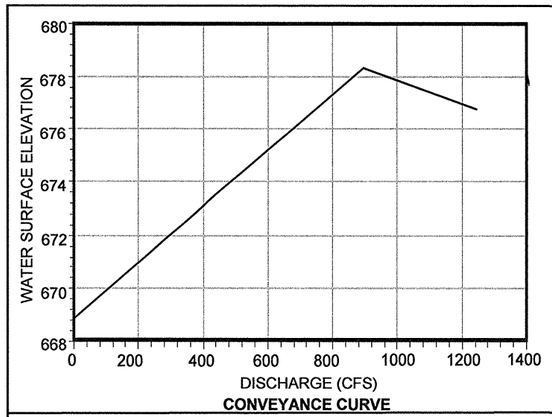

CONVEYANCE CURVE

FLOW DATA AT "UPSTREAM CULVERT" SECTION 684.931

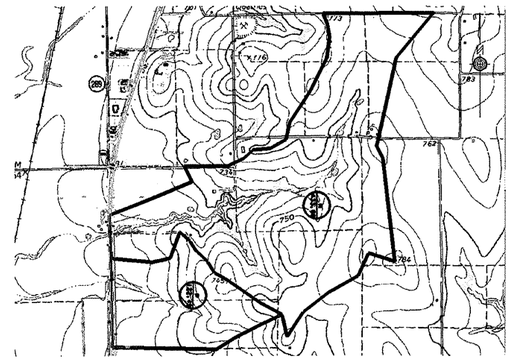

DRAINAGE AREA

DOE BRANCH TRIBUTARY H

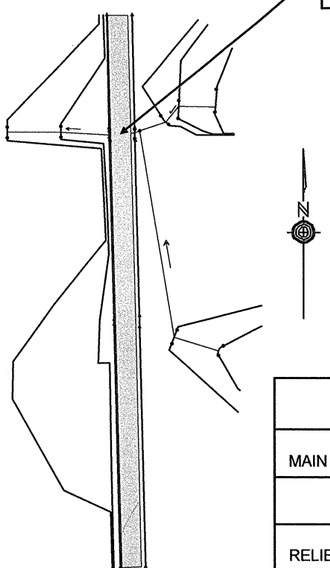

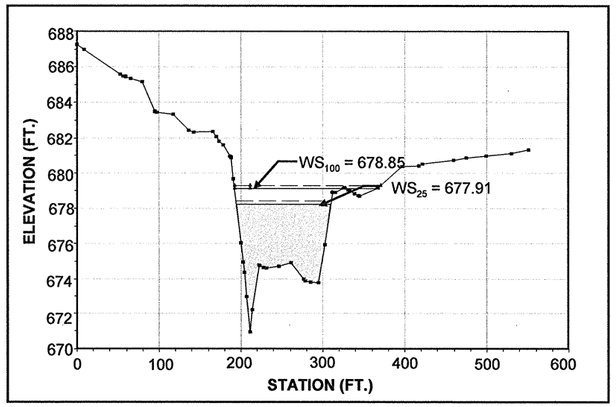

UPPER REACH "NATURAL GROUND" SECTION - STA. 1340.865

	EXIST. WATERWAY BELOW ELEV. 678.10 (25 YR)			PROP. WATERWAY BELOW ELEV. 677.91 (25 YR)			EXIST. WATERWAY BELOW ELEV. 678.66 (100 YR)			PROP. WATERWAY BELOW ELEV. 678.85 (100 YR)		
	LOB	CH	ROB	LOB	CH	ROB	LOB	CH	ROB	LOB	CH	ROB
AREA	0	408.46	0	0	386.71	0	0	474.01	0	0	496.07	0.89
W.P.	0	117.20	0	0	116.05	0	0	120.61	0	0	121.73	12.62
N	0.05	0.04	0.05	0.05	0.04	0.05	0.05	0.04	0.05	0.05	0.04	0.05
VEL.	0	3.42	0	0	3.61	0	0	3.90	0	0	3.73	0.20
Q	0	1396.00	0	0	1396.00	0	0	1851.00	0	0	1850.82	0.18
	Q TOTAL = 1396.00 V AVG. = 3.42			Q TOTAL = 1396.00 V AVG. = 3.61			Q TOTAL = 1851.00 V AVG. = 3.90			Q TOTAL = 1851.00 V AVG. = 3.72		

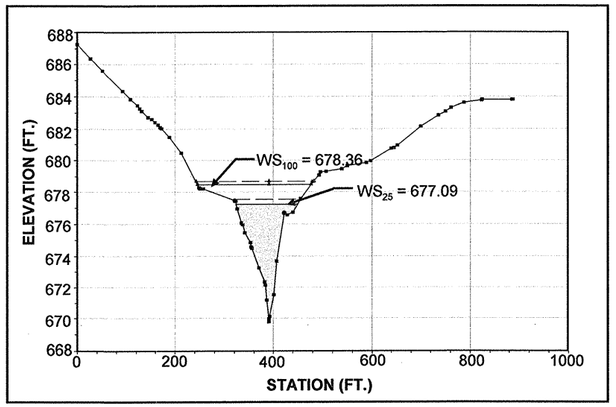

UPPER REACH "NATURAL GROUND" SECTION - STA. 1052.415

	EXIST. WATERWAY BELOW ELEV. 677.51 (25 YR)			PROP. WATERWAY BELOW ELEV. 677.09 (25 YR)			EXIST. WATERWAY BELOW ELEV. 678.01 (100 YR)			PROP. WATERWAY BELOW ELEV. 678.36 (100 YR)		
	LOB	CH	ROB	LOB	CH	ROB	LOB	CH	ROB	LOB	CH	ROB
AREA	0.03	349.38	20.76	0	308.79	8.98	12.24	399.29	39.68	34.25	434.31	56.57
W.P.	2.25	101.17	32.29	0	97.83	24.72	46.55	101.17	43.85	74.20	101.17	52.40
N	0.05	0.04	0.05	0.05	0.04	0.05	0.05	0.04	0.05	0.05	0.04	0.05
VEL.	0.08	3.93	1.03	0	4.50	0.85	0.59	4.48	1.34	0.73	4.04	1.29
Q	0	1374.68	21.31	0	1388.36	7.64	7.22	1790.45	53.33	25.02	1753.20	72.78
	Q TOTAL = 1396.00 V AVG. = 3.77			Q TOTAL = 1396.00 V AVG. = 4.39			Q TOTAL = 1851.00 V AVG. = 4.10			Q TOTAL = 1851.00 V AVG. = 3.52		

WIN TR-55 ANALYSIS		COMPUTED FLOWS (CFS)
MAIN DRAINAGE AREA	0.68 SQ. MI.	*Q25 = 1396.00
		Q100 = 1851.00
RELIEF DRAINAGE AREA	0.19 SQ. MI.	*Q25 = 540.00
*DESIGN DISCHARGE		Q100 = 702.00

NOTES:

1. CHANNEL CROSS SECTIONS NORMAL TO FLOW.
2. CHANNEL STATIONING FROM LEFT TO RIGHT LOOKING DOWNSTREAM.
3. HYDRAULIC CALCULATIONS PERFORMED FEBRUARY 2010 USING HEC-RAS V. 4.0.
4. DRAINAGE AREA TAKEN FROM USGS 7.5-MINUTE TOPOGRAPHIC QUAD MAPS.
5. ALL ELEVATIONS ARE IN FEET AND ALL FLOWS ARE IN CFS UNLESS OTHERWISE NOTED.
6. VERTICAL DATUM IS NAVD88.
7. COORDINATION WITH THE LOCAL FLOODPLAIN ADMINISTRATOR FOR CELINA WAS COMPLETED ON AUGUST 9, 2010.
8. A STARTING WATER SURFACE ELEVATION WAS CALCULATED USING THE ASSUMPTIO OF NORMAL DEPTH.

STATE OF TEXAS
NICHOLAS VON SPENCER
93702
LICENSED
PROFESSIONAL ENGINEER
4-8-11

PROP. MODEL CROSS SECTIONS SHOWN AREA = FLOW AREA (SQ. FT.) W.P. = WETTED PERIMETER (FT.) N = COEFFICIENT OF ROUGHNESS VEL. = VELOCITY (FT/S) Q = DISCHARGE (CFS)

Texas Department of Transportation
© 2011

DOE BRANCH TRIBUTARY H HYDRAULIC DATA

SCALE: AS SHOWN SHEET 1 OF 3

DESIGN AMW	FED.RD. DIV.NO.	STATE PROJECT NO.		HIGHWAY NO.
GRAPHICS AMW	6	(SEE TITLE SHEET)		SH 289
	STATE	DISTRICT	COUNTY	SHEET NO.
CHECK NVS	TEXAS	DALLAS	COLLIN	226
CHECK NVS	CONTROL 0091	SECTION 04	JOB 055	

4/8/11 9:07 AM

R-201104-01

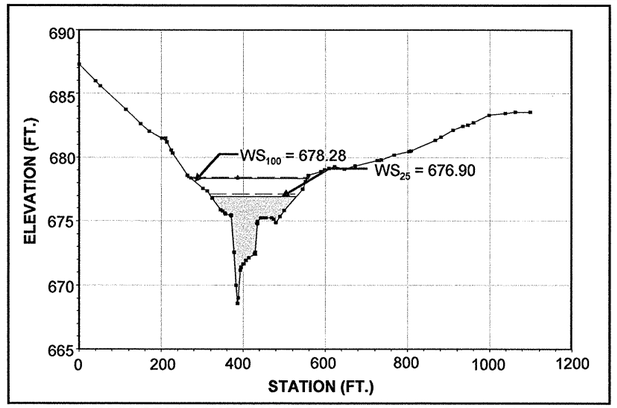

UPPER REACH "NATURAL GROUND" SECTION - STA. 903.975

	EXIST. WATERWAY BELOW ELEV. 677.40 (25 YR)			PROP. WATERWAY BELOW ELEV. 676.90 (25 YR)			EXIST. WATERWAY BELOW ELEV. 677.89 (100 YR)			PROP. WATERWAY BELOW ELEV. 678.28 (100 YR)		
	LOB	CH	ROB	LOB	CH	ROB	LOB	CH	ROB	LOB	CH	ROB
AREA	71.66	350.89	174.88	45.15	319.11	124.90	106.81	382.83	230.57	141.20	407.81	276.34
W.P.	58.88	66.41	107.15	48.41	66.41	94.29	80.60	66.41	114.96	95.69	66.41	119.83
N	0.05	0.04	0.05	0.05	0.04	0.05	0.05	0.04	0.05	0.05	0.04	0.05
VEL.	0.96	3.20	1.17	1.00	3.74	1.27	1.10	3.66	1.45	1.01	3.27	1.36
Q	68.92	1122.56	204.52	45.26	1192.57	158.18	117.27	1400.02	333.71	142.65	1332.39	375.96
	Q TOTAL = 1396.00 V AVG. = 2.34			Q TOTAL = 1396.00 V AVG. = 2.85			Q TOTAL = 1851.00 V AVG. = 2.57			Q TOTAL = 1851.00 V AVG. = 2.24		

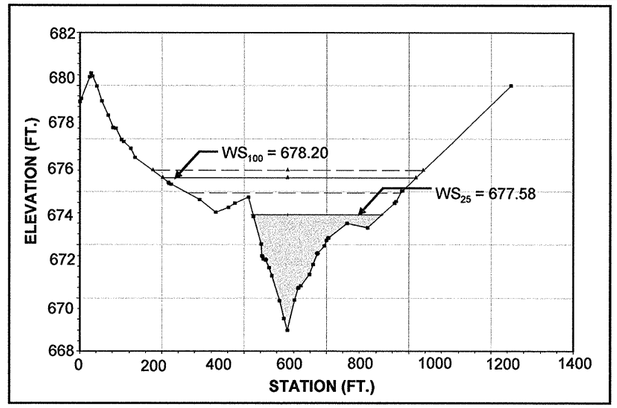

SOUTH REACH "NATURAL GROUND" SECTION - STA. 915.042

	EXIST. WATERWAY BELOW ELEV. 677.58 (25 YR)			PROP. WATERWAY BELOW ELEV. 677.58 (25 YR)			EXIST. WATERWAY BELOW ELEV. 677.81 (100 YR)			PROP. WATERWAY BELOW ELEV. 678.20 (100 YR)		
	LOB	CH	ROB	LOB	CH	ROB	LOB	CH	ROB	LOB	CH	ROB
AREA	6.99	88.20	23.20	7.02	88.33	23.37	15.33	102.65	43.26	53.03	127.52	84.23
W.P.	15.23	63.06	79.43	15.27	63.06	79.57	61.56	63.06	95.08	119.51	63.06	115.53
N	0.05	0.04	0.05	0.05	0.04	0.05	0.05	0.04	0.05	0.05	0.04	0.05
VEL.	2.11	5.54	1.56	2.11	5.53	1.56	1.84	5.74	1.96	1.15	3.96	1.61
Q	14.75	489.02	36.23	14.79	488.70	36.51	28.20	588.94	84.86	61.19	505.50	135.31
	Q TOTAL = 540.00 V AVG. = 4.56			Q TOTAL = 540.00 V AVG. = 4.55			Q TOTAL = 702.00 V AVG. = 4.35			Q TOTAL = 702.00 V AVG. = 3.96		

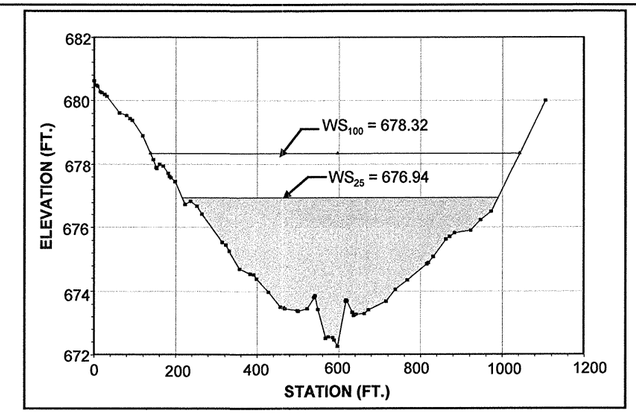

SOUTH REACH "NATURAL GROUND" SECTION - STA. 661.041

	EXIST. WATERWAY BELOW ELEV. 677.46 (25 YR)			PROP. WATERWAY BELOW ELEV. 676.94 (25 YR)			EXIST. WATERWAY BELOW ELEV. 677.98 (100 YR)			PROP. WATERWAY BELOW ELEV. 678.32 (100 YR)		
	LOB	CH	ROB	LOB	CH	ROB	LOB	CH	ROB	LOB	CH	ROB
AREA	866.08	358.01	991.64	692.89	317.15	792.91	1052.95	398.74	1200.07	1185.45	425.07	1340.24
W.P.	341.80	78.48	391.32	323.64	78.48	371.57	385.92	78.48	411.02	400.32	78.48	423.76
N	0.05	0.04	0.05	0.05	0.04	0.05	0.05	0.04	0.05	0.05	0.04	0.05
VEL.	0.21	0.40	0.21	0.26	0.49	0.26	0.21	0.40	0.21	0.21	0.39	0.22
Q	185.59	141.91	212.50	179.06	156.47	204.46	243.99	171.91	286.10	246.18	165.02	290.80
	Q TOTAL = 540.00 V AVG. = 0.24			Q TOTAL = 540.00 V AVG. = 0.30			Q TOTAL = 702.00 V AVG. = 0.26			Q TOTAL = 702.00 V AVG. = 0.24		

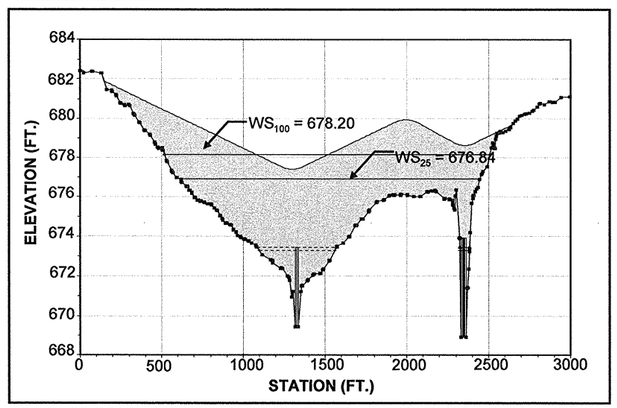

LOWER REACH "UPSTREAM OF MULT. OPENINGS" SECTION - STA. 705.911

	EXIST. WATERWAY BELOW ELEV. 677.46 (25 YR)			PROP. WATERWAY BELOW ELEV. 676.84 (25 YR)			EXIST. WATERWAY BELOW ELEV. 677.97 (100 YR)			PROP. WATERWAY BELOW ELEV. 678.20 (100 YR)		
	LOB	CH	ROB	LOB	CH	ROB	LOB	CH	ROB	LOB	CH	ROB
AREA	5167.89	453.58	65.46	4110.46	351.98	118.33	6092.14	492.31	116.61	6514.77	418.69	268.10
W.P.	1036.10	67.97	0	73.14	50.56	11.68	1036.10	67.97	0	73.14	50.56	11.68
N	0.05	0.04	0.05	0.05	0.04	0.05	0.05	0.04	0.05	0.05	0.04	0.05
VEL.	0.49	1.02	0	1.99	2.79	1.74	0.57	1.12	0	2.19	3.00	1.96
Q	1495.63	440.37	0	857.13	982.03	96.84	2033.73	519.27	0	1158.30	1254.58	140.12
	Q TOTAL = 1936.00 V AVG. = 0.56			Q TOTAL = 1936.00 V AVG. = 2.31			Q TOTAL = 2553.00 V AVG. = 0.63			Q TOTAL = 2553.00 V AVG. = 2.51		

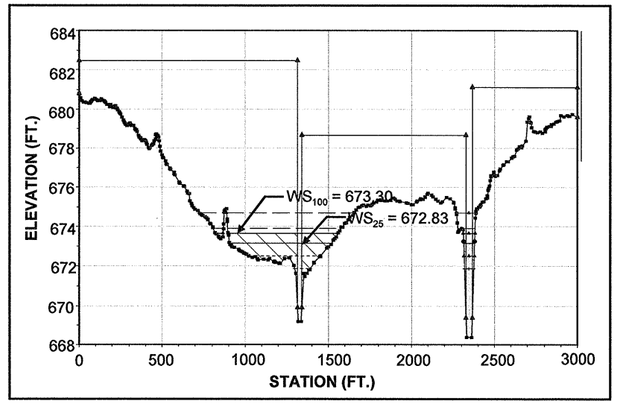

LOWER REACH "DOWNSTREAM OF MULT. OPENINGS" SECTION - STA. 566.300

	EXIST. WATERWAY BELOW ELEV. 673.02 (25 YR)			PROP. WATERWAY BELOW ELEV. 672.83 (25 YR)			EXIST. WATERWAY BELOW ELEV. 673.46 (100 YR)			PROP. WATERWAY BELOW ELEV. 673.30 (100 YR)		
	LOB	CH	ROB	LOB	CH	ROB	LOB	CH	ROB	LOB	CH	ROB
AREA	500.12	157.29	0	386.75	208.66	0	774.03	182.24	0	665.84	240.16	0
W.P.	43.60	44.06	0	28.04	37.27	0	43.60	44.06	0	28.04	37.27	0
N	0.05	0.04	0.05	0.05	0.04	0.05	0.05	0.04	0.05	0.05	0.04	0.05
VEL.	5.78	7.31	0	5.88	8.41	0	6.76	8.54	0	7.02	9.89	0
Q	840.54	1095.46	0	581.56	1354.44	0	1111.26	1441.74	0	786.80	1766.20	0
	Q TOTAL = 1936.00 V AVG. = 6.56			Q TOTAL = 1936.00 V AVG. = 7.45			Q TOTAL = 2553.00 V AVG. = 7.66			Q TOTAL = 2553.00 V AVG. = 8.78		

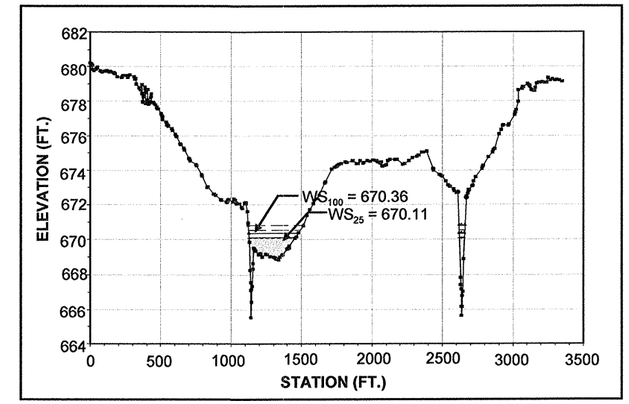

LOWER REACH "NATURAL GROUND" SECTION - STA. 300.019

	EXIST. WATERWAY BELOW ELEV. 670.11 (25 YR)			PROP. WATERWAY BELOW ELEV. 670.11 (25 YR)			EXIST. WATERWAY BELOW ELEV. 670.37 (100 YR)			PROP. WATERWAY BELOW ELEV. 670.36 (100 YR)		
	LOB	CH	ROB	LOB	CH	ROB	LOB	CH	ROB	LOB	CH	ROB
AREA	334.30	75.51	0	334.30	75.51	0	411.96	83.88	0	408.90	83.55	0
W.P.	338.07	37.28	0	338.07	37.28	0	354.63	39.40	0	354.00	39.32	0
N	0.05	0.04	0.05	0.05	0.04	0.05	0.05	0.04	0.05	0.05	0.04	0.05
VEL.	3.98	8.02	0	3.98	8.02	0	3.98	8.02	0	4.51	8.47	0
Q	1330.21	605.79	0	1330.21	605.79	0	1330.21	605.79	0	1845.44	707.56	0
	Q TOTAL = 1936.00 V AVG. = 4.72			Q TOTAL = 1936.00 V AVG. = 4.72			Q TOTAL = 2553.00 V AVG. = 5.15			Q TOTAL = 2553.00 V AVG. = 5.18		

NOTES:

1. CHANNEL CROSS SECTIONS NORMAL TO FLOW.
2. CHANNEL STATIONING FROM LEFT TO RIGHT LOOKING DOWNSTREAM.
3. HYDRAULIC CALCULATIONS PERFORMED FEBRUARY 2010 USING HEC-RAS V. 4.0.
4. DRAINAGE AREA TAKEN FROM USGS 7.5-MINUTE TOPOGRAPHIC QUAD MAPS.
5. ALL ELEVATIONS ARE IN FEET AND ALL FLOWS ARE IN CFS UNLESS OTHERWISE NOTED.
6. VERTICAL DATUM IS NAVD88.
7. COORDINATION WITH THE LOCAL FLOODPLAIN ADMINISTRATOR FOR CELINA WAS COMPLETED ON AUGUST 9, 2010.
8. A STARTING WATER SURFACE ELEVATION WAS CALCULATED USING THE ASSUMPTION OF NORMAL DEPTH.

STATE OF TEXAS
NICHOLAS VON SPENCER
93702
LICENSED
PROFESSIONAL ENGINEER
4-8-11

PROP. MODEL CROSS SECTIONS SHOWN AREA = FLOW AREA (SQ. FT.) W.P. = WETTED PERIMETER (FT.) N = COEFFICIENT OF ROUGHNESS VEL. = VELOCITY (FT/S) Q = DISCHARGE (CFS)

Texas Department of Transportation
© 2011

DOE BRANCH TRIBUTARY H HYDRAULIC DATA

SCALE: AS SHOWN

SHEET 2 OF 3

DESIGN AMW	FED.RD. DIV.NO.	STATE PROJECT NO.		HIGHWAY NO.
GRAPHICS AMW	6	(SEE TITLE SHEET)		SH 289
	STATE	DISTRICT	COUNTY	SHEET NO.
CHECK NVS	TEXAS	DALLAS	COLLIN	227
CHECK NVS	CONTROL	SECTION	JOB	
	0091	04	055	

4/8/11 9:07 AM

R-201104-01

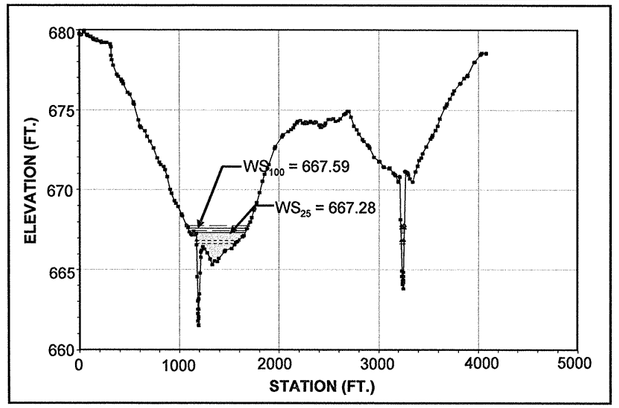

LOWER REACH "NATURAL GROUND" SECTION - STA. 10.755

	EXIST. WATERWAY BELOW ELEV. 667.28 (25 YR)			PROP. WATERWAY BELOW ELEV. 667.28 (25 YR)			EXIST. WATERWAY BELOW ELEV. 667.59 (100 YR)			PROP. WATERWAY BELOW ELEV. 667.59 (100 YR)		
	LOB	CH	ROB	LOB	CH	ROB	LOB	CH	ROB	LOB	CH	ROB
AREA	620.74	61.98	0	620.74	61.98	0	792.68	72.17	0	792.68	72.17	0
W.P.	526.93	33.10	0	526.93	33.10	0	591.47	35.59	0	591.47	35.59	0
N	0.05	0.04	0.05	0.05	0.04	0.05	0.05	0.04	0.05	0.05	0.04	0.05
VEL.	2.68	4.37	0	2.68	4.37	0	2.80	4.61	0	2.80	4.61	0
Q	1665.07	270.93	0	1665.07	270.93	0	2220.03	332.97	0	2220.03	332.97	0
	Q TOTAL = 1936.00 V AVG. = 2.84			Q TOTAL = 1936.00 V AVG. = 2.84			Q TOTAL = 2553.00 V AVG. = 2.95			Q TOTAL = 2553.00 V AVG. = 2.95		

NOTES:
1. CHANNEL CROSS SECTIONS NORMAL TO FLOW.
2. CHANNEL STATIONING FROM LEFT TO RIGHT LOOKING DOWNSTREAM.
3. HYDRAULIC CALCULATIONS PERFORMED FEBRUARY 2010 USING HEC-RAS V. 4.0.
4. DRAINAGE AREA TAKEN FROM USGS 7.5-MINUTE TOPOGRAPHIC QUAD MAPS.
5. ALL ELEVATIONS ARE IN FEET AND ALL FLOWS ARE IN CFS UNLESS OTHERWISE NOTED.
6. VERTICAL DATUM IS NAVD88.
7. COORDINATION WITH THE LOCAL FLOODPLAIN ADMINISTRATOR FOR CELINA WAS COMPLETED ON AUGUST 9, 2010.
8. A STARTING WATER SURFACE ELEVATION WAS CALCULATED USING THE ASSUMPTION OF NORMAL DEPTH.

PROP. MODEL CROSS SECTIONS SHOWN AREA = FLOW AREA (SQ. FT.) W.P. = WETTED PERIMETER (FT.) N = COEFFICIENT OF ROUGHNESS VEL. = VELOCITY (FT/S) Q = DISCHARGE (CFS)

STATE OF TEXAS
NICHOLAS VON SPENCER
93702
LICENSED
PROFESSIONAL ENGINEER
4-8-11

Texas Department of Transportation
© 2011

DOE BRANCH TRIBUTARY H HYDRAULIC DATA

SCALE: AS SHOWN — SHEET 3 OF 3

DESIGN	FED.RD. DIV.NO.	STATE PROJECT NO.		HIGHWAY NO.
AMW	6	(SEE TITLE SHEET)		SH 289
GRAPHICS	STATE	DISTRICT	COUNTY	SHEET NO.
AMW	TEXAS	DALLAS	COLLIN	228
CHECK	CONTROL	SECTION	JOB	
NVS	0091	04	055	
CHECK NVS				

4/8/11 9:07 AM

R-201104-01

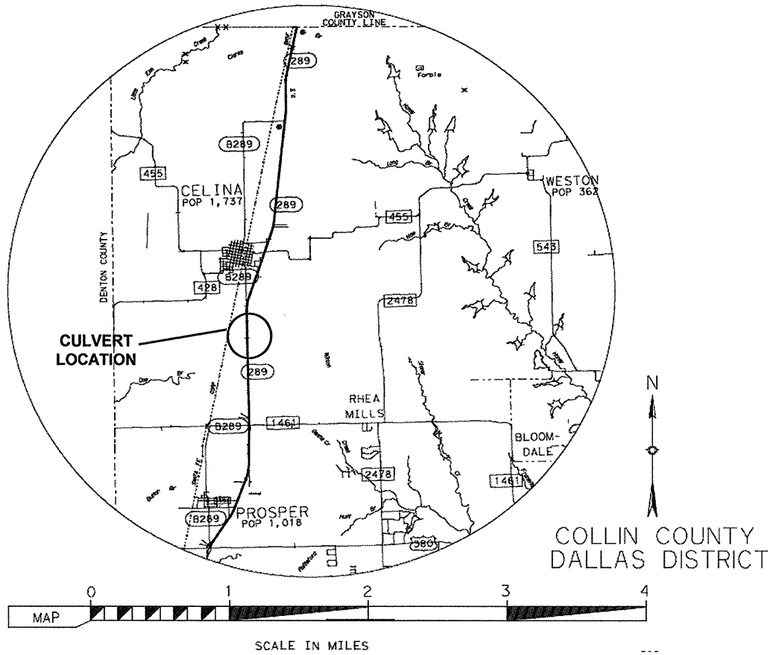

DOE BRANCH TRIBUTARY G

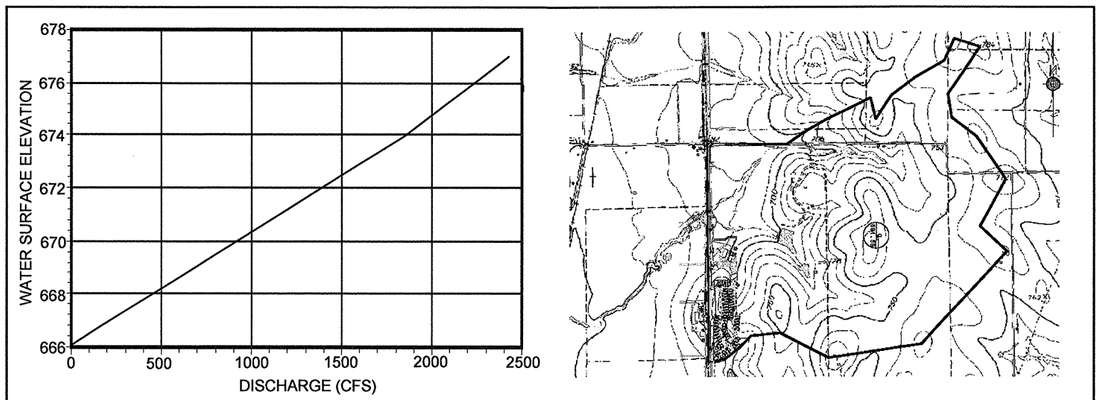

CONVEYANCE CURVE

FLOW DATA AT "UPSTREAM CULVERT" SECTION 978.822

DRAINAGE AREA

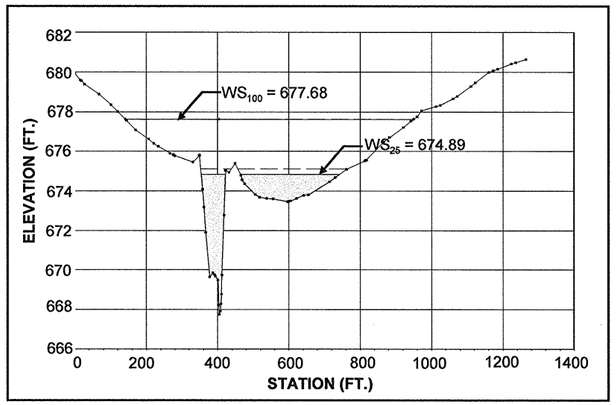

"NATURAL GROUND - HECRASG" SECTION - STA. 1266.091

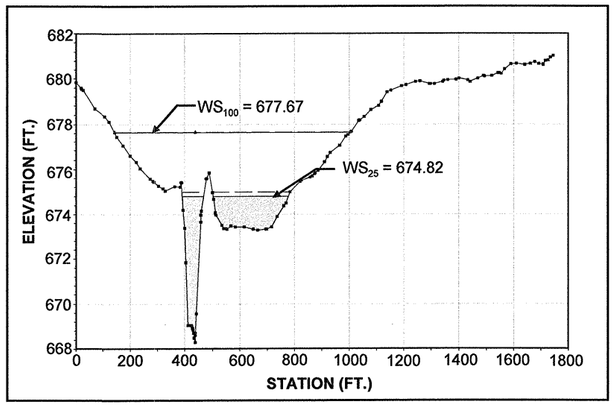

"NATURAL GROUND - HECRASG" SECTION - STA. 1216.091

	EXIST. WATERWAY BELOW ELEV. 677.90 (25 YR)			PROP. WATERWAY BELOW ELEV. 674.89 (25 YR)			EXIST. WATERWAY BELOW ELEV. 678.34 (100 YR)			PROP. WATERWAY BELOW ELEV. 677.68 (100 YR)		
	LOB	CH	ROB	LOB	CH	ROB	LOB	CH	ROB	LOB	CH	ROB
AREA	340.64	502.25	1581.32	0	282.76	267.80	446.32	535.31	1835.10	293.87	486.29	1465.29
W.P.	222.63	76.58	542.07	0	71.58	283.45	249.15	76.58	605.85	209.80	76.58	529.54
N	0.05	0.04	0.05	0.05	0.04	0.05	0.05	0.04	0.05	0.05	0.04	0.05
VEL.	0.42	1.38	0.64	0	5.06	1.56	0.52	1.60	0.73	0.57	1.95	0.90
Q	142.06	690.92	1014.02	0	1429.65	417.35	230.01	854.74	1342.25	167.19	947.31	1312.50
	Q TOTAL = 1847			Q TOTAL = 1847			Q TOTAL = 2427			Q TOTAL = 2427		
	V AVG. = 0.76			V AVG. = 3.35			V AVG. = 0.86			V AVG. = 1.08		

	EXIST. WATERWAY BELOW ELEV. 677.89 (25 YR)			PROP. WATERWAY BELOW ELEV. 674.82 (25 YR)			EXIST. WATERWAY BELOW ELEV. 678.34 (100 YR)			PROP. WATERWAY BELOW ELEV. 677.67 (100 YR)		
	LOB	CH	ROB	LOB	CH	ROB	LOB	CH	ROB	LOB	CH	ROB
AREA	485.20	568.25	1625.94	0	290.05	332.91	604.67	609.48	1874.48	430.15	548.07	1508.76
W.P.	256.08	93.81	541.04	0	80.46	276.63	279.64	93.81	575.11	246.48	93.81	528.83
N	0.05	0.04	0.05	0.05	0.04	0.05	0.05	0.04	0.05	0.05	0.04	0.05
VEL.	0.44	1.18	0.59	0	4.42	1.70	0.52	1.36	0.69	0.60	1.67	0.83
Q	211.46	671.81	963.73	0	1280.97	566.03	315.24	827.04	1284.72	257.32	917.15	1252.53
	Q TOTAL = 1847			Q TOTAL = 1847			Q TOTAL = 2427			Q TOTAL = 2427		
	V AVG. = 0.69			V AVG. = 2.96			V AVG. = 0.79			V AVG. = 0.98		

MULTIPLE BOX CULVERT
NBI NO. 18-043-0-0091-04-XXX

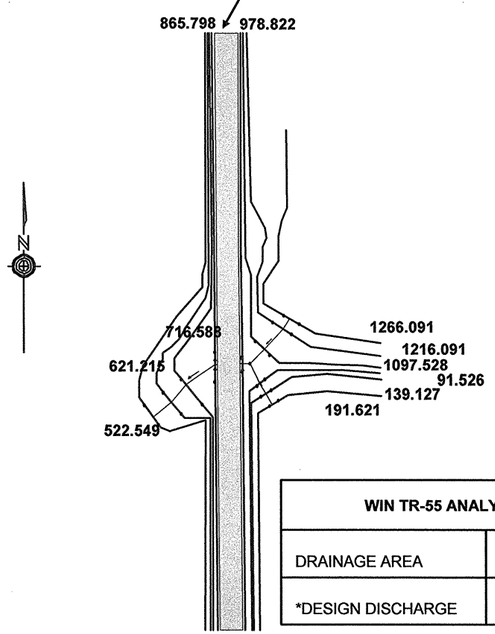

WIN TR-55 ANALYSIS		COMPUTED FLOWS (CFS)
DRAINAGE AREA	1.08 SQ. MI.	*Q25 = 1847
*DESIGN DISCHARGE		Q100 = 2427

NOTES:
1. CHANNEL CROSS SECTIONS NORMAL TO FLOW.
2. CHANNEL STATIONING FROM LEFT TO RIGHT LOOKING DOWNSTREAM.
3. HYDRAULIC CALCULATIONS PERFORMED FEBRUARY 2010 USING HEC-RAS V. 4.0.
4. DRAINAGE AREA TAKEN FROM USGS 7.5-MINUTE TOPOGRAPHIC QUAD MAPS.
5. ALL ELEVATIONS ARE IN FEET AND ALL FLOWS ARE IN CFS UNLESS OTHERWISE NOTED.
6. VERTICAL DATUM IS NAVD88.
7. COORDINATION WITH THE LOCAL FLOODPLAIN ADMINISTRATOR FOR CELINA WAS COMPLETED ON AUGUST 9, 2010.
8. A STARTING WATER SURFACE ELEVATION WAS CALCULATED USING THE ASSUMPTION OF NORMAL DEPTH.

STATE OF TEXAS
NICHOLAS VON SPENCER
93702
LICENSED
PROFESSIONAL ENGINEER
4-8-11

Texas Department of Transportation
© 2011

DOE BRANCH TRIBUTARY G HYDRAULIC DATA

SCALE: AS SHOWN — SHEET 1 OF 3

DESIGN AMW	FED.RD. DIV.NO.	STATE PROJECT NO.		HIGHWAY NO.
GRAPHICS	6	(SEE TITLE SHEET)		SH 289
AMW	STATE	DISTRICT	COUNTY	SHEET NO.
CHECK NVS	TEXAS	DALLAS	COLLIN	229
CHECK NVS	CONTROL	SECTION	JOB	
	0091	04	055	

PROP. MODEL CROSS SECTIONS SHOWN AREA = FLOW AREA (SQ. FT.) W.P. = WETTED PERIMETER (FT.) N = COEFFICIENT OF ROUGHNESS VEL. = VELOCITY (FT/S) Q = DISCHARGE (CFS)

4/8/11 9:07 AM

R-201104-01

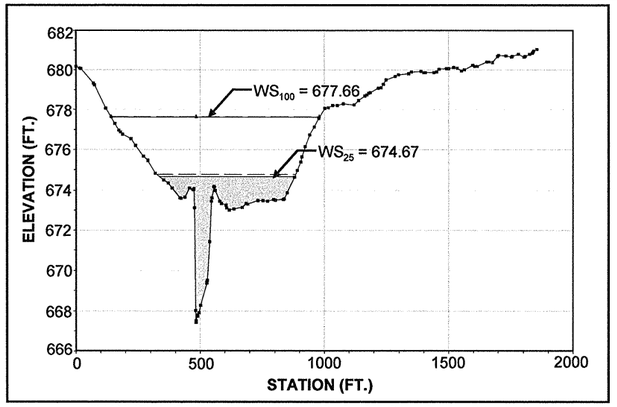

"NATURAL GROUND - HECRASG" SECTION - STA. 1097.528

	EXIST. WATERWAY BELOW ELEV. 677.89 (25 YR)			PROP. WATERWAY BELOW ELEV. 674.67 (25 YR)			EXIST. WATERWAY BELOW ELEV. 678.33 (100 YR)			PROP. WATERWAY BELOW ELEV. 677.66 (100 YR)		
	LOB	CH	ROB	LOB	CH	ROB	LOB	CH	ROB	LOB	CH	ROB
AREA	868.01	645.23	1595.59	83.75	377.64	389.92	1025.40	682.24	1807.21	791.60	626.46	1498.37
W.P.	344.17	86.35	436.64	138.36	86.35	324.60	362.96	86.35	571.36	333.34	86.35	425.46
N	0.05	0.04	0.05	0.05	0.04	0.05	0.05	0.04	0.05	0.05	0.04	0.05
VEL.	0.40	1.04	0.52	0.75	3.50	1.18	0.52	1.29	0.56	0.55	1.46	0.72
Q	350.44	671.71	824.85	62.79	1322.58	461.63	533.28	880.34	1013.39	437.76	911.71	1077.54
	Q TOTAL = 1847 V AVG. = 0.59			Q TOTAL = 1847 V AVG. = 2.17			Q TOTAL = 2427 V AVG. = 0.69			Q TOTAL = 2427 V AVG. = 0.83		

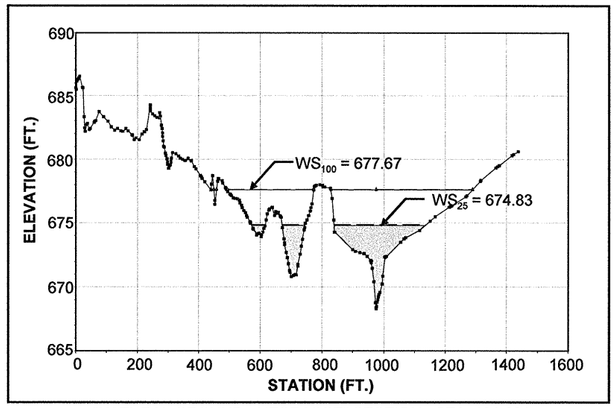

"NATURAL GROUND - HECRASGT" SECTION - STA. 191.621

	EXIST. WATERWAY BELOW ELEV. 677.89 (25 YR)			PROP. WATERWAY BELOW ELEV. 674.83 (25 YR)			EXIST. WATERWAY BELOW ELEV. 678.34 (100 YR)			PROP. WATERWAY BELOW ELEV. 677.67 (100 YR)		
	LOB	CH	ROB	LOB	CH	ROB	LOB	CH	ROB	LOB	CH	ROB
AREA	1465.47	344.39	819.07	417.46	208.88	155.54	1692.37	364.13	954.56	1367.28	334.65	755.02
W.P.	472.36	45.01	294.96	237.82	45.01	132.13	531.10	45.01	312.08	428.14	45.01	286.59
N	0.05	0.04	0.05	0.05	0.04	0.05	0.05	0.04	0.05	0.05	0.04	0.05
VEL.	0.62	1.38	0.56	1.87	4.12	1.32	0.71	1.60	0.67	0.89	1.89	0.76
Q	912.85	474.66	459.49	780.89	860.67	205.44	1206.70	582.06	638.24	1221.50	633.23	572.27
	Q TOTAL = 1847 V AVG. = 0.70			Q TOTAL = 1847 V AVG. = 2.36			Q TOTAL = 2427 V AVG. 0.81			Q TOTAL = 2427 V AVG. = 0.99		

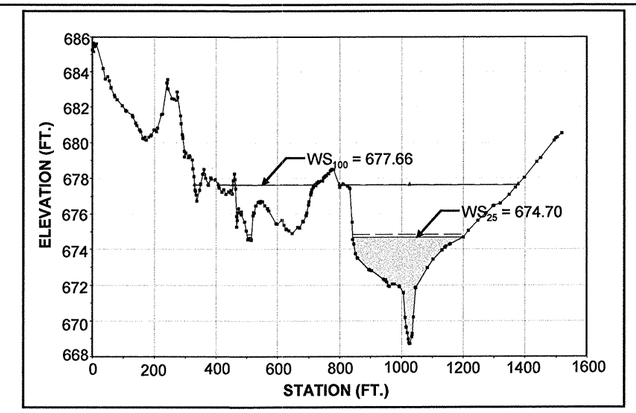

"NATURAL GROUND - HECRASGT" SECTION - STA. 139.127

	EXIST. WATERWAY BELOW ELEV. 677.89 (25 YR)			PROP. WATERWAY BELOW ELEV. 674.70 (25 YR)			EXIST. WATERWAY BELOW ELEV. 678.33 (100 YR)			PROP. WATERWAY BELOW ELEV. 677.66 (100 YR)		
	LOB	CH	ROB	LOB	CH	ROB	LOB	CH	ROB	LOB	CH	ROB
AREA	1403.03	392.06	957.75	305.60	228.72	167.57	1679.78	414.88	1116.04	1278.50	380.52	881.50
W.P.	579.95	51.81	344.09	166.72	51.81	154.89	651.88	51.81	365.44	532.59	51.81	332.40
N	0.05	0.04	0.05	0.05	0.04	0.05	0.05	0.04	0.05	0.05	0.04	0.05
VEL.	0.57	1.33	0.54	2.04	4.35	1.36	0.64	1.52	0.64	0.82	1.87	0.76
Q	806.35	519.49	521.16	622.37	996.02	228.61	1078.57	632.56	715.87	1047.62	711.15	668.24
	Q TOTAL = 1847 V AVG. = 0.67			Q TOTAL = 1847 V AVG. = 2.63			Q TOTAL = 2427 V AVG. = 0.76			Q TOTAL = 2427 V AVG. = 0.96		

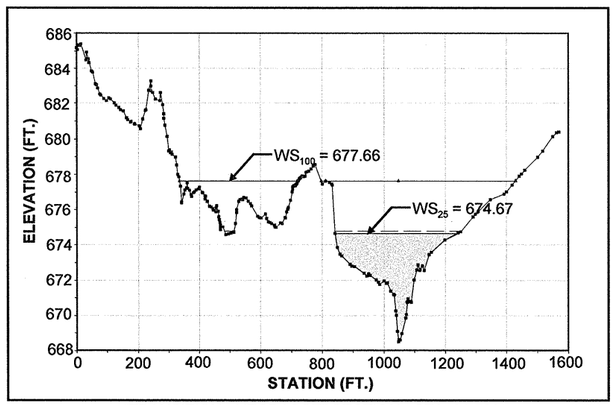

"TRANSITION - HECRASGT" SECTION - STA. 91.526

	EXIST. WATERWAY BELOW ELEV. 677.89 (25 YR)			PROP. WATERWAY BELOW ELEV. 674.67 (25 YR)			EXIST. WATERWAY BELOW ELEV. 678.33 (100 YR)			PROP. WATERWAY BELOW ELEV. 677.66 (100 YR)		
	LOB	CH	ROB	LOB	CH	ROB	LOB	CH	ROB	LOB	CH	ROB
AREA	1776.77	362.42	1065.96	422.86	223.88	222.37	2076.15	381.60	1233.04	1632.42	351.65	984.59
W.P.	651.53	43.44	364.07	210.19	43.44	165.96	693.04	43.44	386.41	629.31	43.44	353.28
N	0.05	0.04	0.05	0.05	0.04	0.05	0.05	0.04	0.05	0.05	0.04	0.05
VEL.	0.51	1.20	0.48	1.71	3.79	1.24	0.59	1.37	0.56	0.72	1.69	0.66
Q	906.14	433.45	507.41	723.18	849.01	274.81	1217.20	522.38	687.42	1175.18	597.51	654.31
	Q TOTAL = 1847 V AVG. = 0.58			Q TOTAL = 1847 V AVG. = 2.13			Q TOTAL = 2427 V AVG. = 0.66			Q TOTAL = 2427 V AVG. = 0.82		

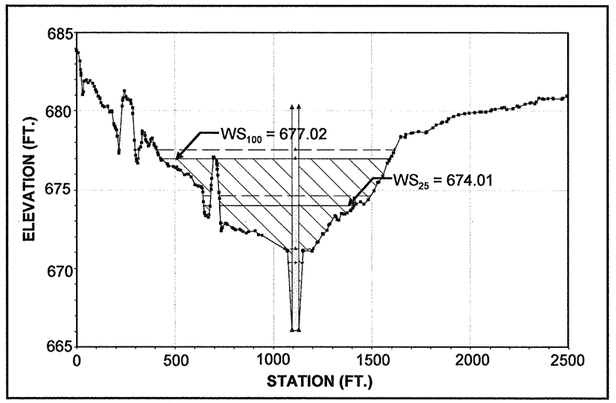

"UPSTREAM OF CULVERT" – HECRASG LOWER SECTION - STA. 978.822

	EXIST. WATERWAY BELOW ELEV. 677.89 (25 YR)			PROP. WATERWAY BELOW ELEV. 674.01 (25 YR)			EXIST. WATERWAY BELOW ELEV. 678.33 (100 YR)			PROP. WATERWAY BELOW ELEV. 677.02 (100 YR)		
	LOB	CH	ROB	LOB	CH	ROB	LOB	CH	ROB	LOB	CH	ROB
AREA	2847.97	631.61	2065.74	668.47	507.51	397.83	3184.78	659.52	2286.17	2061.65	737.58	1540.08
W.P.	729.29	62.90	486.35	0	36.14	0	780.47	62.90	502.72	0	36.14	0
N	0.05	0.04	0.05	0.05	0.04	0.05	0.05	0.04	0.05	0.05	0.04	0.05
VEL.	0.29	0.66	0.30	0	6.41	0	0.34	0.78	0.36	0	6.12	0
Q	821.28	414.55	611.17	0	1847	0	1091.59	515.82	819.59	0	2427	0
	Q TOTAL = 1847 V AVG. = 0.33			Q TOTAL = 1847 V AVG. = 6.41			Q TOTAL = 2427 V AVG. = 0.40			Q TOTAL = 2427 V AVG. = 6.12		

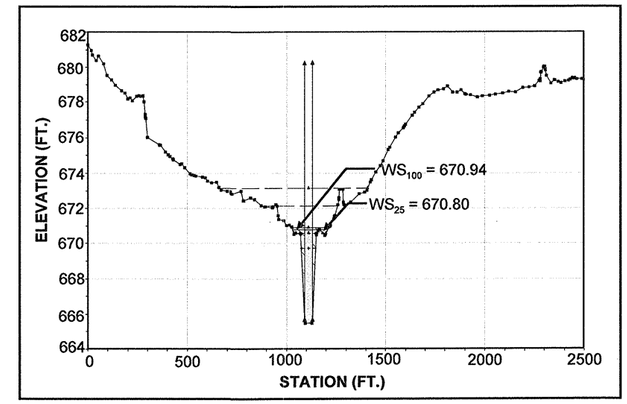

"DOWNSTREAM OF CULVERT – HECRASG LOWER" SECTION - STA. 865.798

	EXIST. WATERWAY BELOW ELEV. 671.50 (25 YR)			PROP. WATERWAY BELOW ELEV. 670.80 (25 YR)			EXIST. WATERWAY BELOW ELEV. 672.33 (100 YR)			PROP. WATERWAY BELOW ELEV. 670.94 (100 YR)		
	LOB	CH	ROB	LOB	CH	ROB	LOB	CH	ROB	LOB	CH	ROB
AREA	29.94	324.56	50.06	9.06	304.14	9.28	119.31	429.01	125.78	15.47	315.44	18.34
W.P.	0	38.81	0	0	37.32	0	0	38.81	0	0	37.32	0
N	0.05	0.04	0.05	0.05	0.04	0.05	0.05	0.04	0.05	0.05	0.04	0.05
VEL.	0	11.63	0	0	9.32	0	0	12.71	0	0	11.92	0
Q	0	1847	0	0	1847	0	0	2427	0	0	2427	0
	Q TOTAL = 1847 V AVG. = 11.63			Q TOTAL = 1847 V AVG. = 9.32			Q TOTAL = 2427 V AVG. = 12.71			Q TOTAL = 2427 V AVG. = 11.92		

NOTES:
1. CHANNEL CROSS SECTIONS NORMAL TO FLOW.
2. CHANNEL STATIONING FROM LEFT TO RIGHT LOOKING DOWNSTREAM.
3. HYDRAULIC CALCULATIONS PERFORMED FEBRUARY 2010 USING HEC-RAS V. 4.0.
4. DRAINAGE AREA TAKEN FROM USGS 7.5-MINUTE TOPOGRAPHIC QUAD MAPS.
5. ALL ELEVATIONS ARE IN FEET AND ALL FLOWS ARE IN CFS UNLESS OTHERWISE NOTED.
6. VERTICAL DATUM IS NAVD88.
7. COORDINATION WITH THE LOCAL FLOODPLAIN ADMINISTRATOR FOR CELINA WAS COMPLETED ON AUGUST 9, 2010.
8. A STARTING WATER SURFACE ELEVATION WAS CALCULATED USING THE ASSUMPTION OF NORMAL DEPTH.

STATE OF TEXAS
NICHOLAS VON SPENCER
93702
LICENSED
PROFESSIONAL ENGINEER
4-8-11

PROP. MODEL CROSS SECTIONS SHOWN AREA = FLOW AREA (SQ. FT.) W.P. = WETTED PERIMETER (FT.) N = COEFFICIENT OF ROUGHNESS VEL. = VELOCITY (FT/S) Q = DISCHARGE (CFS)

Texas Department of Transportation
© 2011

DOE BRANCH TRIBUTARY G HYDRAULIC DATA

SCALE: AS SHOWN SHEET 2 OF 3

DESIGN AMW	FED.RD. DIV.NO.	STATE PROJECT NO.		HIGHWAY NO.
GRAPHICS AMW	6	(SEE TITLE SHEET)		SH 289
	STATE	DISTRICT	COUNTY	SHEET NO.
CHECK NVS	TEXAS	DALLAS	COLLIN	230
CHECK NVS	CONTROL	SECTION	JOB	
	0091	04	055	

4/8/11 9:07 AM

R-201104-01

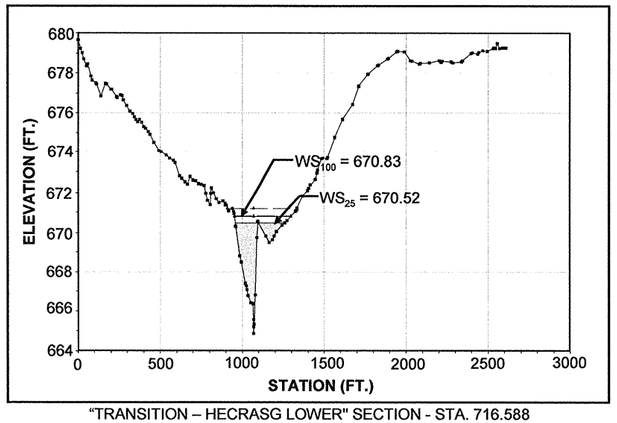

"TRANSITION – HECRASG LOWER" SECTION - STA. 716.588

	EXIST. WATERWAY BELOW ELEV. 670.52 (25 YR)			PROP. WATERWAY BELOW ELEV. 670.52 (25 YR)			EXIST. WATERWAY BELOW ELEV. 670.82 (100 YR)			PROP. WATERWAY BELOW ELEV. 670.83 (100 YR)		
	LOB	CH	ROB	LOB	CH	ROB	LOB	CH	ROB	LOB	CH	ROB
AREA	0.48	370.86	81.71	0.48	370.86	81.71	2.57	411.45	137.69	2.63	412.25	138.89
W.P.	4.19	135.67	167.84	4.19	135.67	167.84	9.71	135.77	202.93	9.82	135.77	203.60
N	0.05	0.04	0.05	0.05	0.04	0.05	0.05	0.04	0.05	0.05	0.04	0.05
VEL.	0.45	4.72	1.19	0.45	4.72	1.19	0.84	5.36	1.58	0.85	5.35	1.58
Q	0.22	1749.19	97.59	0.22	1749.19	97.59	2.17	2206.99	217.85	2.22	2205.13	219.64
	Q TOTAL = 1847 V AVG. = 4.08			Q TOTAL = 1847 V AVG. = 4.08			Q TOTAL = 2427 V AVG. = 4.40			Q TOTAL = 2427 V AVG. = 4.38		

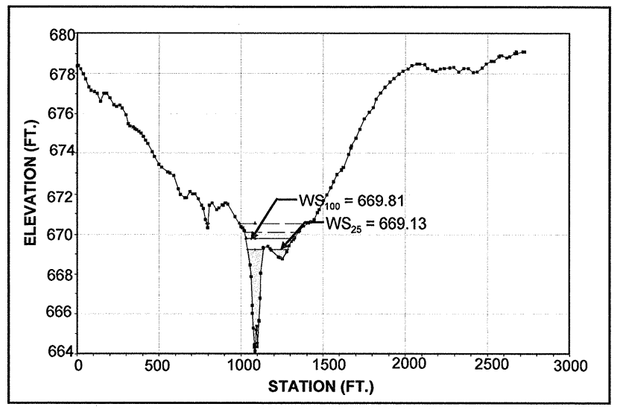

"NATURAL GROUND – HECRSAG LOWER" SECTION - STA. 621.215

	EXIST. WATERWAY BELOW ELEV. 669.13 (25 YR)			PROP. WATERWAY BELOW ELEV. 669.13 (25 YR)			EXIST. WATERWAY BELOW ELEV. 669.83 (100 YR)			PROP. WATERWAY BELOW ELEV. 669.81 (100 YR)		
	LOB	CH	ROB	LOB	CH	ROB	LOB	CH	ROB	LOB	CH	ROB
AREA	0	228.69	16.44	0	228.69	16.44	0	299.54	118.36	0	297.93	115.59
W.P.	0	93.21	87.03	0	93.21	87.03	0	109.56	187.64	0	109.27	186.62
N	0.05	0.04	0.05	0.05	0.04	0.05	0.05	0.04	0.05	0.05	0.04	0.05
VEL.	0	7.99	1.16	0	7.99	1.16	0	7.24	2.18	0	7.30	2.17
Q	0	1827.98	19.02	0	1827.98	19.02	0	2169.06	257.94	0	2175.61	251.39
	Q TOTAL = 1847 V AVG. = 7.53			Q TOTAL = 1847 V AVG. = 7.53			Q TOTAL = 2427 V AVG. = 5.81			Q TOTAL = 2427 V AVG. = 5.87		

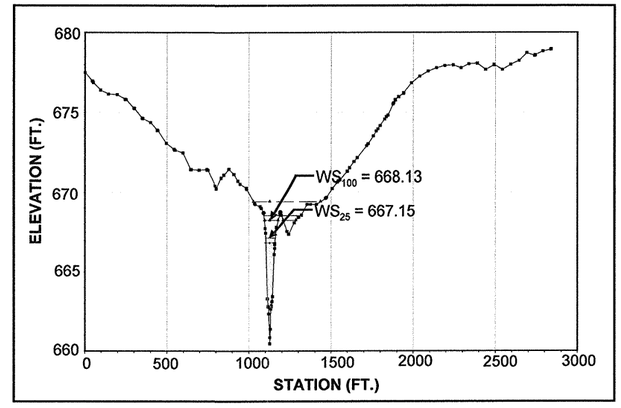

"NATURAL GOUND – HECRASG LOWER" SECTION - STA. 522.549

	EXIST. WATERWAY BELOW ELEV. 667.15 (25 YR)			PROP. WATERWAY BELOW ELEV. 667.15 (25 YR)			EXIST. WATERWAY BELOW ELEV. 668.09 (100 YR)			PROP. WATERWAY BELOW ELEV. 668.13 (100 YR)		
	LOB	CH	ROB	LOB	CH	ROB	LOB	CH	ROB	LOB	CH	ROB
AREA	0	196.90	0	0	196.90	0	0	258.16	24.47	0	260.82	26.72
W.P.	0	59.75	0	0	59.75	0	0	79.72	64.44	0	81.08	68.23
N	0.05	0.04	0.05	0.05	0.04	0.05	0.05	0.04	0.05	0.05	0.04	0.05
VEL.	0	9.38	0	0	9.38	0	0	9.23	1.77	0	9.12	1.79
Q	0	1847	0	0	1847	0	0	2383.71	43.29	0	2379.12	47.88
	Q TOTAL = 1847 V AVG. = 9.38			Q TOTAL = 1847 V AVG. = 9.38			Q TOTAL = 2427 V AVG. = 8.59			Q TOTAL = 2427 V AVG. = 8.44		

4-8-11

NOTES:
1. CHANNEL CROSS SECTIONS NORMAL TO FLOW.
2. CHANNEL STATIONING FROM LEFT TO RIGHT LOOKING DOWNSTREAM.
3. HYDRAULIC CALCULATIONS PERFORMED FEBRUARY 2010 USING HEC-RAS V. 4.0.
4. DRAINAGE AREA TAKEN FROM USGS 7.5-MINUTE TOPOGRAPHIC QUAD MAPS.
5. ALL ELEVATIONS ARE IN FEET AND ALL FLOWS ARE IN CFS UNLESS OTHERWISE NOTED.
6. VERTICAL DATUM IS NAVD88.
7. COORDINATION WITH THE LOCAL FLOODPLAIN ADMINISTRATOR FOR CELINA WAS COMPLETED ON AUGUST 9, 2010.
8. A STARTING WATER SURFACE ELEVATION WAS CALCULATED USING THE ASSUMPTION OF NORMAL DEPTH.

PROP. MODEL CROSS SECTIONS SHOWN AREA = FLOW AREA (SQ. FT.) W.P. = WETTED PERIMETER (FT.) N = COEFFICIENT OF ROUGHNESS VEL. = VELOCITY (FT/S) Q = DISCHARGE (CFS)

Texas Department of Transportation
© 2011

DOE BRANCH TRIBUTARY G HYDRAULIC DATA

SCALE: AS SHOWN

SHEET 3 OF 3

DESIGN AMW	FED.RD. DIV.NO.	STATE PROJECT NO.		HIGHWAY NO.
GRAPHICS AMW	6	(SEE TITLE SHEET)		SH 289
	STATE	DISTRICT	COUNTY	SHEET NO.
CHECK NVS	TEXAS	DALLAS	COLLIN	231
CHECK NVS	CONTROL	SECTION	JOB	
	0091	04	055	

4/8/11 9:07 AM

R-201104-01

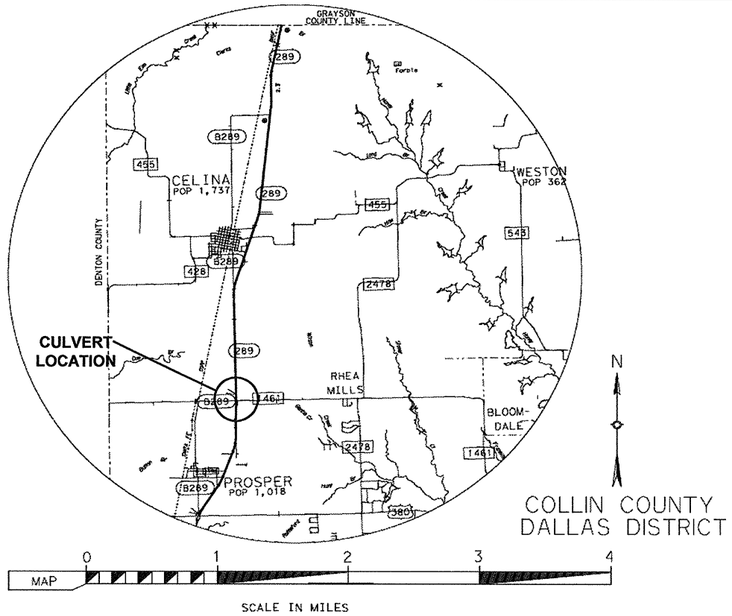

FEMA UNNAMED BRANCH TRIBUTARY

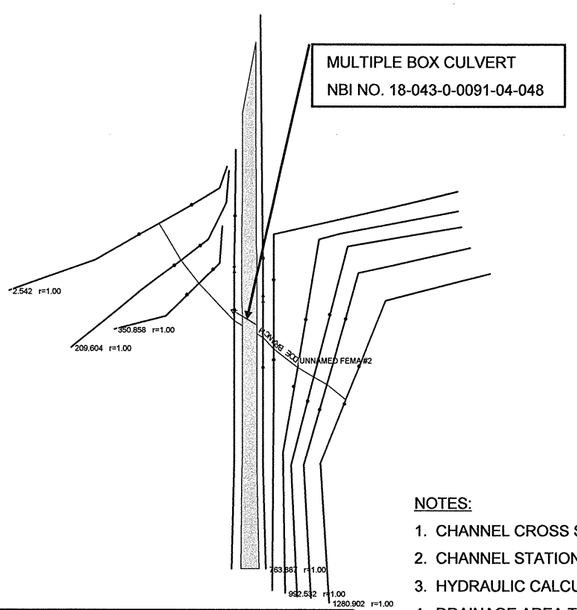

FLOW DATA AT UPSTREAM OF CULVERT

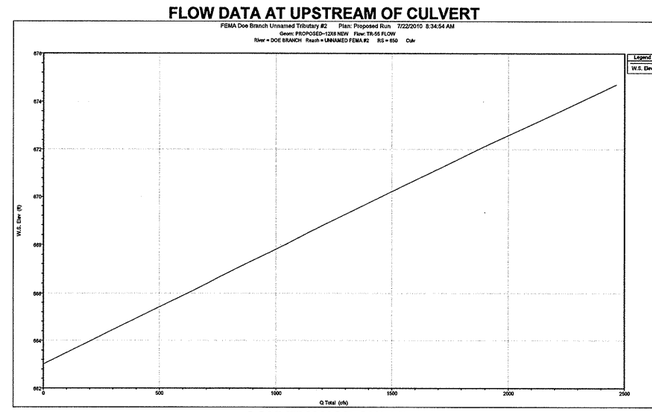

CONVEYANCE CURVE

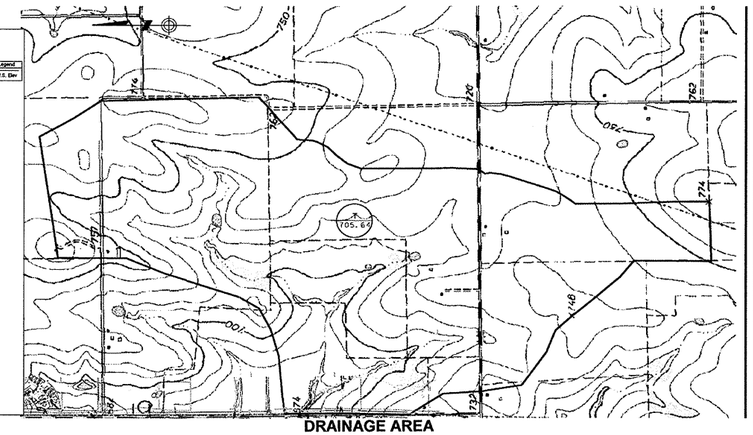

DRAINAGE AREA

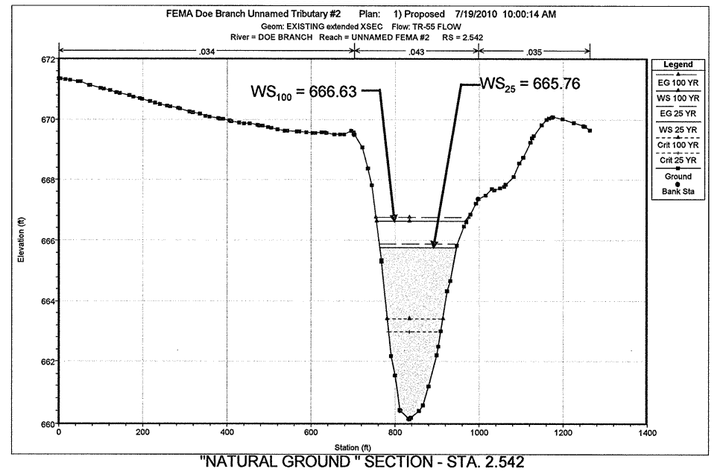

"NATURAL GROUND" SECTION - STA. 2.542

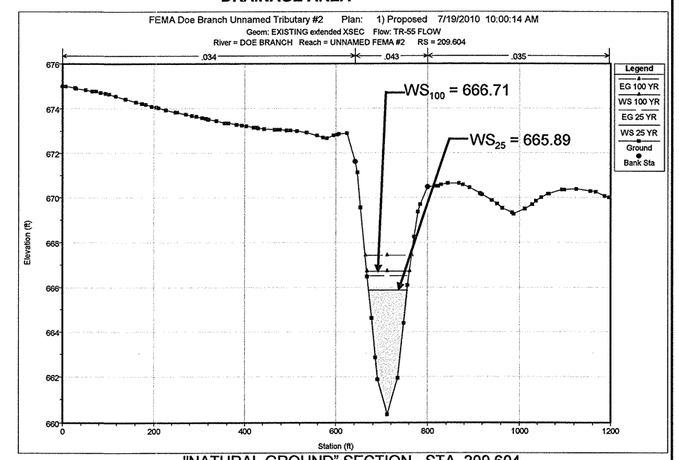

"NATURAL GROUND" SECTION - STA. 209.604

	EXIST. WATERWAY BELOW ELEV. 678.79 (25 YR)			PROP. WATERWAY BELOW ELEV. 665.76 (25 YR)			EXIST. WATERWAY BELOW ELEV. 679.17 (100 YR)			PROP. WATERWAY BELOW ELEV. 666.63 (100 YR)		
	LOB	CH	ROB	LOB	CH	ROB	LOB	CH	ROB	LOB	CH	ROB
AREA	--	661.54	--	--	661.54	--	145.96	218.47	14.37	--	833.7	--
W.P.	--	90.06	--	--	90.06	--	130.10	90.06	24.18	--	215.03	--
N	--	0.043	--	--	0.043	--	0.040	0.045	0.042	--	0.043	--
VEL.	--	2.82	--	--	2.82	--	5.14	7.64	3.20	--	2.96	--
Q	--	1864	--	--	1864	--	750.07	1668.87	46.06	--	2465	--
	Q TOTAL = 1864 V AVG. = 2.82			Q TOTAL = 1864 V AVG. = 2.82			Q TOTAL = 2465 V AVG. = 1.82			Q TOTAL = 2465 V AVG. = 2.96		

	EXIST. WATERWAY BELOW ELEV. 665.89 (25 YR)			PROP. WATERWAY BELOW ELEV. 665.89 (25 YR)			EXIST. WATERWAY BELOW ELEV. 677.00 (100 YR)			PROP. WATERWAY BELOW ELEV. 666.71 (100 YR)		
	LOB	CH	ROB	LOB	CH	ROB	LOB	CH	ROB	LOB	CH	ROB
AREA	--	291.64	--	--	291.64	--	--	364.57	--	--	364.57	--
W.P.	--	85.31	--	--	85.31	--	--	94.59	--	--	94.59	--
N	0.04	0.045	0.042	0.04	0.045	0.042	0.04	0.045	0.042	0.04	0.045	0.042
VEL.	--	6.39	--	--	6.39	--	--	6.76	--	--	6.76	--
Q	--	1864	--	--	1864	--	--	2465	--	--	2465	--
	Q TOTAL = 1864 V AVG. =6.39			Q TOTAL = 1864 V AVG. =6.39			Q TOTAL = 2465 V AVG. =6.76			Q TOTAL = 2465 V AVG. =6.76		

WIN TR-55 ANALYSIS		COMPUTED FLOWS (CFS)
DRAINAGE AREA	1.10 SQ. MI.	* Q25 = 1864
*DESIGN DISCHARGE		Q100 = 2465

NOTES:

1. CHANNEL CROSS SECTIONS NORMAL TO FLOW.
2. CHANNEL STATIONING FROM LEFT TO RIGHT LOOKING DOWNSTREAM.
3. HYDRAULIC CALCULATIONS PERFORMED FEBRUARY 2010 USING HEC-RAS V. 4.0.
4. DRAINAGE AREA TAKEN FROM USGS 7.5-MINUTE TOPOGRAPHIC QUAD MAPS.
5. ALL ELEVATIONS ARE IN FEET AND ALL FLOWS ARE IN CFS UNLESS OTHERWISE NOTED.
6. VERTICAL DATUM IS NAVD88.
7. COORDINATION WITH THE LOCAL FLOODPLAIN ADMINISTRATOR FOR CELINA WAS COMPLETED ON 8-9-10
8. A STARTING WATER SURFACE ELEVATION WAS USED FOR THE 100-YEAR BASE FLOOD FROM THE FEMA EFFECTIVE MODEL.

STATE OF TEXAS
NICHOLAS VON SPENCER
93702
LICENSED
PROFESSIONAL ENGINEER
4-8-11

PROP. MODEL CROSS SECTIONS SHOWN AREA = FLOW AREA (SQ. FT.) W.P. = WETTED PERIMETER (FT.) N = COEFFICIENT OF ROUGHNESS VEL. = VELOCITY (FT/S) Q = DISCHARGE (CFS)

Texas Department of Transportation
© 2011

FEMA UNNAMED TRIBUTARY HYDRAULIC DATA

SCALE: AS SHOWN — SHEET 1 OF 3

DESIGN NVS	FED.RD. DIV.NO.	STATE PROJECT NO.		HIGHWAY NO.
GRAPHICS NVS	6	(SEE TITLE SHEET)		SH 289
	STATE	DISTRICT	COUNTY	SHEET NO.
CHECK NVS	TEXAS	DALLAS	COLLIN	232
CHECK	CONTROL	SECTION	JOB	
	0091	04	055	

4/8/11 9:07 AM

R-201104-01

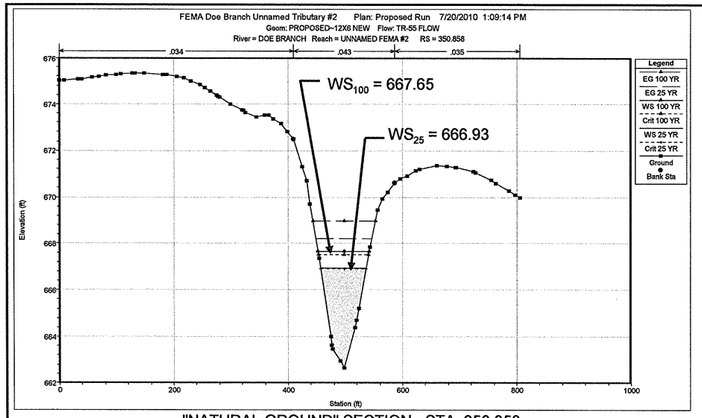

"NATURAL GROUND" SECTION - STA. 350.858

	EXIST. WATERWAY BELOW ELEV. 666.93 (25 YR)			PROP. WATERWAY BELOW ELEV. 666.93 (25 YR)			EXIST. WATERWAY BELOW ELEV. 667.65 (100 YR)			PROP. WATERWAY BELOW ELEV. 667.65 (100 YR)		
	LOB	CH	ROB	LOB	CH	ROB	LOB	CH	ROB	LOB	CH	ROB
AREA	--	206.33	--	--	206.33	--	--	266.03	--	--	266.03	--
W.P.	--	79.89	--	--	79.89	--	--	89.40	--	--	89.40	--
N	--	0.043	--	--	0.043	--	--	0.043	--	--	0.043	--
VEL.	--	9.03	--	--	9.03	--	--	9.27	--	--	9.27	--
Q	--	1864	--	--	1864	--	--	2465	--	--	2465	--
	Q TOTAL =1864 V AVG. =9.03			Q TOTAL =1864 V AVG. =9.03			Q TOTAL =2465 V AVG. =9.27			Q TOTAL =2465 V AVG. =9.27		

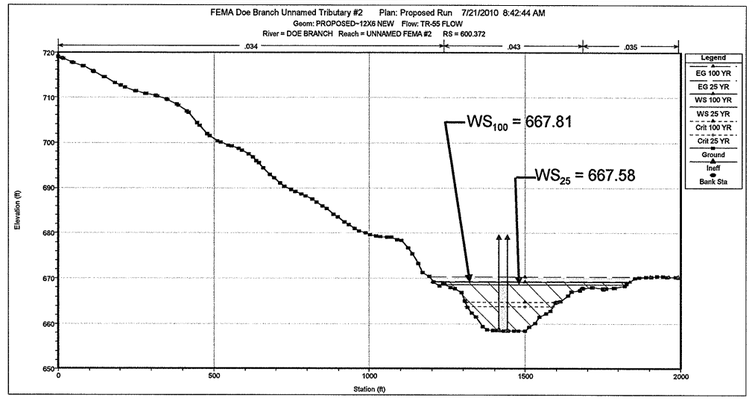

"NATURAL GROUND" SECTION - STA. 600.372

	EXIST. WATERWAY BELOW ELEV. 668.59 (25 YR)			PROP. WATERWAY BELOW ELEV. 667.58 (25 YR)			EXIST. WATERWAY BELOW ELEV. 669.22 (100 YR)			PROP. WATERWAY BELOW ELEV.667.81(100 YR)		
	LOB	CH	ROB	LOB	CH	ROB	LOB	CH	ROB	LOB	CH	ROB
AREA	1.14	2729.05	91.28	2.53	2768.56	103.92	17.98	3007.48	182.73	18.61	3015.50	185.48
W.P.	--	22.14	--	--	27	--	--	22.14	--	--	27	--
N	--	0.043	--	--	0.043	--	--	0.043	--	--	0.043	--
VEL.	--	8.33	--	--	6.77	--	--	10.37	--	--	8.49	--
Q		1864		--	1864	--	--	24.65	--	--	2465	--
	Q TOTAL = 1864 V AVG. =8.33			Q TOTAL = 1864 V AVG. =6.77			Q TOTAL = 2465 V AVG.=10.37			Q TOTAL = 2465 V AVG. = 8.49		

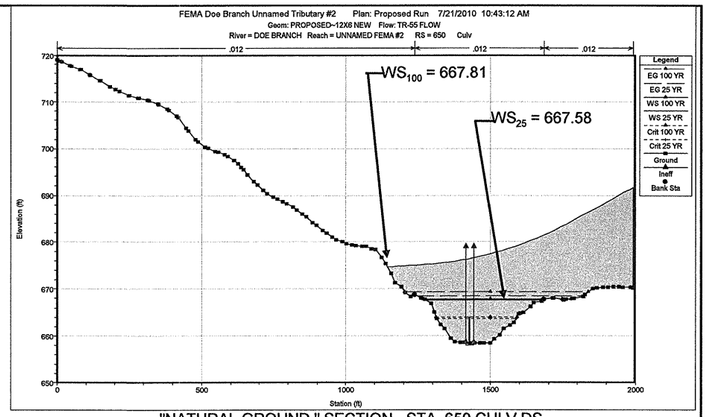

"NATURAL GROUND " SECTION - STA. 650 CULV DS

	EXIST. WATERWAY BELOW ELEV. 668.59 (25 YR)			PROP. WATERWAY BELOW ELEV. 667.58 (25 YR)			EXIST. WATERWAY BELOW ELEV. 669.22 (100 YR)			PROP. WATERWAY BELOW ELEV. 667.81 (100 YR)		
	LOB	CH	ROB	LOB	CH	ROB	LOB	CH	ROB	LOB	CH	ROB
AREA	--	810.18	--	--	258.26	141.05	215.36	2512.58	258.76	--	571.84	685.34
W.P.	--	371.13	--	--	118.94	150.22	217.81	410.81	258.76	--	149.41	315.20
N	0.034	0.043	0.035	0.012	0.012	0.012	0.034	0.043	0.035	0.012	0.012	0.012
VEL.	--	14.79	--	--	12.94			18.90		--	17.12	
Q		1864	--	--	1396.62	467.38	62.33	2178.15	224.53	--	1310.61	1154.39
	Q TOTAL =1864 V AVG. =14.79			Q TOTAL = 1864 V AVG. =12.94			Q TOTAL =2465 V AVG. =18.90			Q TOTAL =2465 V AVG. =17.12		

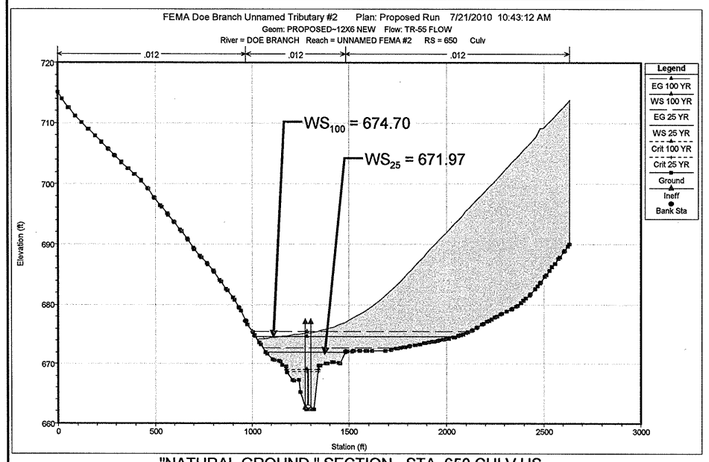

"NATURAL GROUND " SECTION - STA. 650 CULV US

	EXIST. WATERWAY BELOW ELEV. 668.59 (25 YR)			PROP. WATERWAY BELOW ELEV. 671.97 (25 YR)			EXIST. WATERWAY BELOW ELEV. 669.22 (100 YR)			PROP. WATERWAY BELOW ELEV.674.70 (100 YR)		
	LOB	CH	ROB	LOB	CH	ROB	LOB	CH	ROB	LOB	CH	ROB
AREA	--	810.18	--	--	258.26	141.05	215.36	2512.58	258.76	--	571.84	685.34
W.P.	--	371.13	--	--	118.94	150.22	217.81	410.81	258.76	--	149.41	315.20
N	0.034	0.043	0.035	0.012	0.012	0.012	0.034	0.043	0.035	0.012	0.012	0.012
VEL.	--	14.79	--	--	12.94			18.90		--	17.12	
Q		1864	--	--	1396.62	467.38	62.33	2178.15	224.53	--	1310.61	1154.39
	Q TOTAL =1864 V AVG. =14.79			Q TOTAL = 1864 V AVG. =12.94			Q TOTAL =2465 V AVG. =18.90			Q TOTAL =2465 V AVG. =17.12		

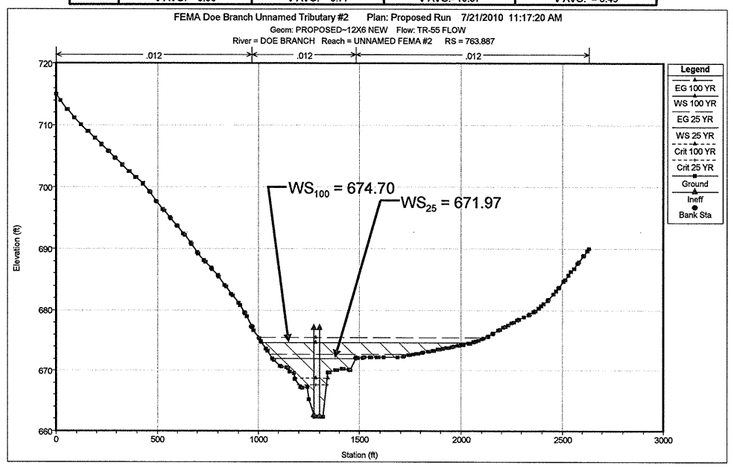

"NATURAL GROUND " SECTION - STA. 763.887

	EXIST. WATERWAY BELOW ELEV. 673.56 (25 YR)			PROP. WATERWAY BELOW ELEV. 671.97 (25 YR)			EXIST. WATERWAY BELOW ELEV. 678.74(100 YR)			PROP. WATERWAY BELOW ELEV 674.70 (100 YR)		
	LOB	CH	ROB	LOB	CH	ROB	LOB	CH	ROB	LOB	CH	ROB
AREA	--	249.79	--	--	261.24	--	702.72	4015.49	3849.12	--	334.93	--
W.P.	--	22.14	--	--	27.01	--	159.86	377.35	820.21	--	27.01	--
N	--	0.045	--	--	0.012	--	0.04	0.045	0.042	--	0.012	--
VEL.	--	7.46	--	--	7.14	--	.22	.36	.22	--	7.36	--
Q	--	1864	--	--	1864	--	157.95	1446.40	860.66	--	2465	--
	Q TOTAL = 1864 V AVG. =7.46			Q TOTAL = 1864 V AVG. =7.14			Q TOTAL = 2465 V AVG. =.32			Q TOTAL = 2465 V AVG. =		

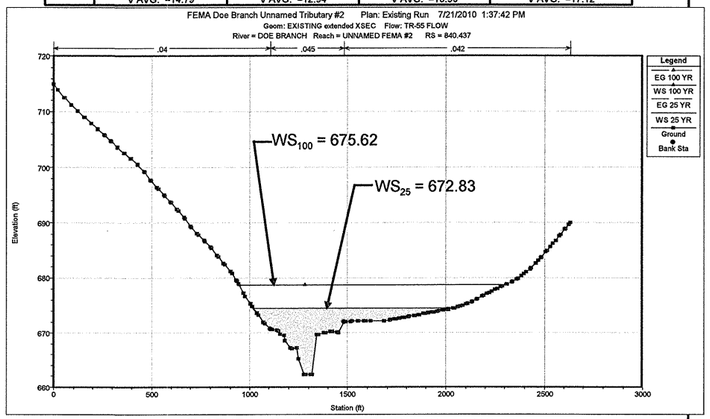

"NATURAL GROUND" SECTION - STA. 840.437

	EXIST. WATERWAY BELOW ELEV. 674.52 (25 YR)			PROP. WATERWAY BELOW ELEV. 672.83 (25 YR)			EXIST. WATERWAY BELOW ELEV.678.74(100 YR)			PROP. WATERWAY BELOW ELEV. 675.62 (100 YR)		
	LOB	CH	ROB	LOB	CH	ROB	LOB	CH	ROB	LOB	CH	ROB
AREA	173.26	2427.19	887.71	56.66	1793.38	157.23	702.78	4015.63	3849.42	280.91	2841.33	1557.76
W.P.	87.08	377.35	555.86	51.54	377.35	303.44	159.87	377.35	820.23	107.82	377.35	650.63
N	0.040	0.045	0.042	0.040	0.045	0.042	0.040	0.045	0.042	0.040	0.045	0.042
VEL.	.33	.64	.27	.43	1.00	0.25	.22	.36	.22	.36	.65	.33
Q	57.46	1564.38	242.16	24.13	1801.26	38.61	157.95	1446.36	860.68	101.72	1855.52	507.77
	Q TOTAL = 1864 V AVG. =1.29			Q TOTAL = 1864 V AVG. =.56			Q TOTAL = 2465 V AVG. =1.09			Q TOTAL = 2465 V AVG. =.4467		

NOTES:

1. CHANNEL CROSS SECTIONS NORMAL TO FLOW.
2. CHANNEL STATIONING FROM LEFT TO RIGHT LOOKING DOWNSTREAM.
3. HYDRAULIC CALCULATIONS PERFORMED FEBRUARY 2010 USING HEC-RAS V. 4.0.
4. DRAINAGE AREA TAKEN FROM USGS 7.5-MINUTE TOPOGRAPHIC QUAD MAPS.
5. ALL ELEVATIONS ARE IN FEET AND ALL FLOWS ARE IN CFS UNLESS OTHERWISE NOTED.
6. VERTICAL DATUM IS NAVD88.
7. COORDINATION WITH THE LOCAL FLOODPLAIN ADMINISTRATOR FOR CELINA WAS COMPLETED ON 8-9-10
8. A STARTING WATER SURFACE ELEVATION WAS USED FOR THE 100-YEAR BASE FLOOD FROM THE FEMA EFFECTIVE MODEL.

STATE OF TEXAS
NICHOLAS VON SPENCER
93702
LICENSED
PROFESSIONAL ENGINEER
4-8-11

Texas Department of Transportation
© 2011

FEMA UNNAMED TRIBUTARY HYDRAULIC DATA

SCALE: AS SHOWN

SHEET 2 OF 3

DESIGN NVS	FED.RD. DIV.NO.	STATE PROJECT NO.		HIGHWAY NO.
GRAPHICS NVS	6	(SEE TITLE SHEET)		SH 289
	STATE	DISTRICT	COUNTY	SHEET NO.
CHECK NVS	TEXAS	DALLAS	COLLIN	233
CHECK	CONTROL	SECTION	JOB	
	0091	04	055	

4/8/11 9:07 AM

R-201104-01

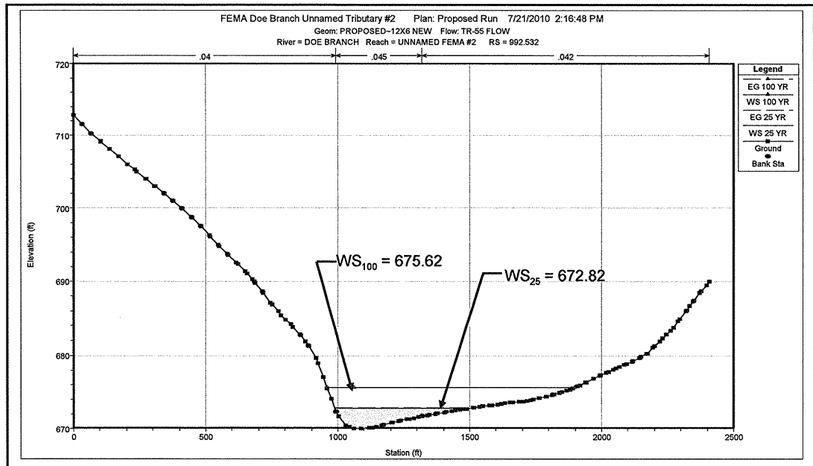

NATURAL GROUND SECTION - STA. 992.532

	EXIST. WATERWAY BELOW ELEV. 674.52 (25 YR)			PROP. WATERWAY BELOW ELEV. 672.82 (25 YR)			EXIST. WATERWAY BELOW ELEV. 678.74 (100 YR)			PROP. WATERWAY BELOW ELEV. 675.62 (100 YR)		
	LOB	CH	ROB	LOB	CH	ROB	LOB	CH	ROB	LOB	CH	ROB
AREA	26.70	1231.31	688.81	1.38	682.02	101.56	216.62	2597.19	3376.01	59.84	1587.63	1277.64
W.P.	24.28	323.26	478.01	5.54	323.26	185.91	66.82	323.26	767.36	35.91	323.26	579.41
N	0.40	.045	.042	0.40	.045	.042	0.40	.045	.042	0.40	.045	.042
VEL.	.56	1.14	.64	.69	2.57	1.12	.29	.48	.34	.56	1.02	.64
Q	15	1407.66	441.34	.96	1749.64	113.40	64.15	1242.56	1158.29	33.32	1615.13	816.55
	Q TOTAL = 1864 V AVG. =.78			Q TOTAL = 1864 V AVG. =1.46			Q TOTAL = 2465 V AVG. =.37			Q TOTAL = 2465 V AVG. =.74		

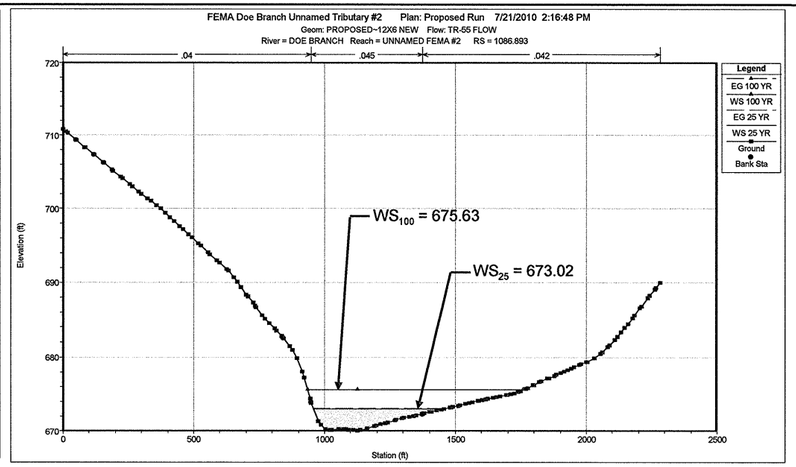

NATURAL GROUND SECTION - STA. 1086.893

	EXIST. WATERWAY BELOW ELEV. 674.54 (25 YR)			PROP. WATERWAY BELOW ELEV. 673.02 (25 YR)			EXIST. WATERWAY BELOW ELEV. 678.75 (100 YR)			PROP. WATERWAY BELOW ELEV. 675.63 (100 YR)		
	LOB	CH	ROB	LOB	CH	ROB	LOB	CH	ROB	LOB	CH	ROB
AREA	1.29	1522.57	289.96	--	881.71	27.13	93.53	3314.08	2160.70	11.13	1988.11	655.72
W.P.	4.60	425.86	267.44	--	416.34	82.24	41.29	425.86	585.61	13.53	425.86	383.88
N	0.040	0.045	0.042	0.040	0.045	0.042	0.040	0.045	0.042	0.040	0.045	0.042
VEL.	.23	1.12	.54	--	2.09	.65	.26	.52	.43	.37	1.05	.57
Q	.30	1706.53	157.17	--	1846.38	17.62	23.90	1713.39	727.71	4.12	2084.12	376.76
	Q TOTAL = 1864 V AVG. =.63			Q TOTAL = 1864 V AVG. =1.37			Q TOTAL = 2465 V AVG. =.404			Q TOTAL = 2465 V AVG. =.66		

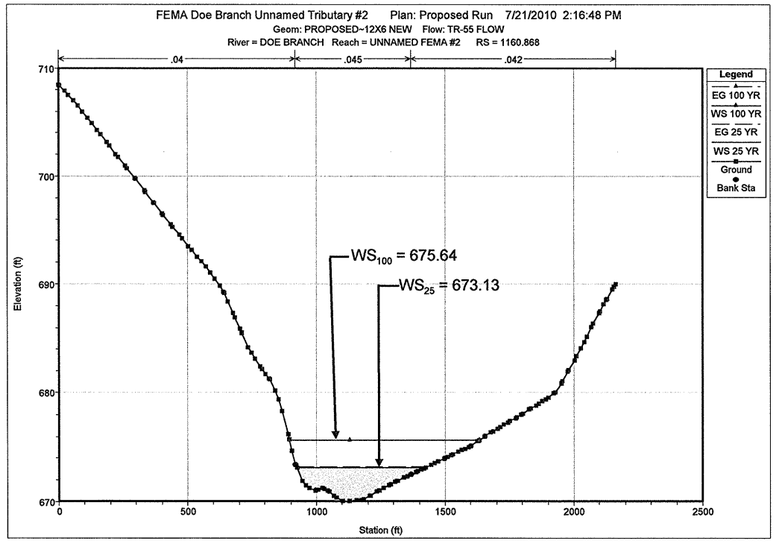

NATURAL GROUND SECTION - STA. 1160.868

	EXIST. WATERWAY BELOW ELEV. 674.55 (25 YR)			PROP. WATERWAY BELOW ELEV. 673.13 (25 YR)			EXIST. WATERWAY BELOW ELEV. 678.75 (100 YR)			PROP. WATERWAY BELOW ELEV. 675.64 (100 YR)		
	LOB	CH	ROB	LOB	CH	ROB	LOB	CH	ROB	LOB	CH	ROB
AREA	7.49	1533	186.68	--	899.26	18.17	156.16	3408.74	1590	28.48	2019.22	435.67
W.P.	13.27	447.34	183.53	--	441.56	57.77	58.50	447.34	480.26	25.40	447.34	266.04
N	.040	.045	.042	.040	.045	.042	.040	.045	.042	.040	.045	.042
VEL.	.39	1.15	.55	--	2.06	.64	.31	.55	.34	.48	1.09	.59
Q	2.90	1758.98	102.12	--	1852.46	11.53	48.11	1878.38	538.51	13.75	2193.33	257.92
	Q TOTAL = 1864 V AVG. =.70			Q TOTAL = 1864 V AVG. =1.35			Q TOTAL = 2465 V AVG. =.40			Q TOTAL = 2465 V AVG. =.72		

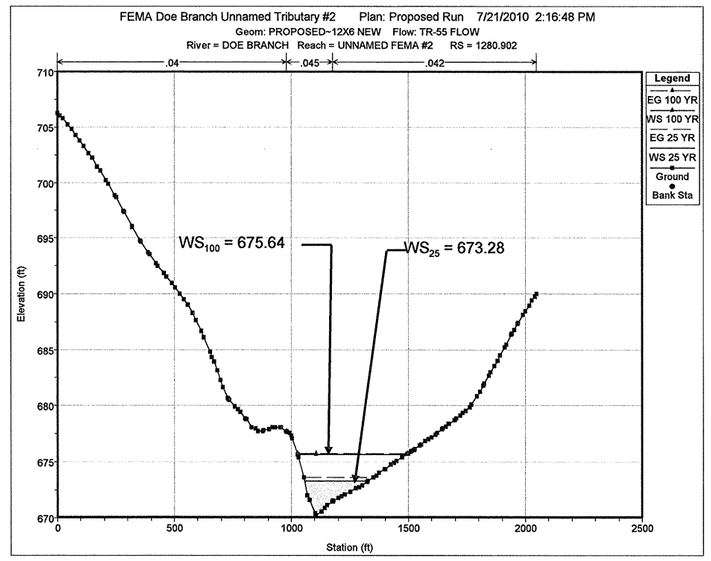

NATURAL GROUND SECTION - STA. 1280.902

	EXIST. WATERWAY BELOW ELEV.674.57 (25 YR)			PROP. WATERWAY BELOW ELEV. 673.28 (25 YR)			EXIST. WATERWAY BELOW ELEV. 678.75 (100 YR)			PROP. WATERWAY BELOW ELEV. 675.64 (100 YR)		
	LOB	CH	ROB	LOB	CH	ROB	LOB	CH	ROB	LOB	CH	ROB
AREA	--	810.18	--	--	258.26	141.05	215.36	2512.58	512.57	--	571.84	685.34
W.P.	--	371.13	--	--	118.94	150.22	217.81	410.81	258.76	--	149.19	315.18
N	--	.045	--		.045	.042				--	0.045	0.042
VEL.	--	2.30	--	--	5.41	3.31	.29	.87	.44	--	2.29	1.68
Q	--	1864	--	--	1396.62	467.38	62.33	2178.15	224.53	--	1310.61	1154.39
	Q TOTAL = 1864 V AVG. =2.30			Q TOTAL = 1864 V AVG. =4.36			Q TOTAL = 2465 V AVG. =.53			Q TOTAL = 2465 V AVG. =1.98		

NOTES:

1. CHANNEL CROSS SECTIONS NORMAL TO FLOW.
2. CHANNEL STATIONING FROM LEFT TO RIGHT LOOKING DOWNSTREAM.
3. HYDRAULIC CALCULATIONS PERFORMED FEBRUARY 2010 USING HEC-RAS V. 4.0.
4. DRAINAGE AREA TAKEN FROM USGS 7.5-MINUTE TOPOGRAPHIC QUAD MAPS.
5. ALL ELEVATIONS ARE IN FEET AND ALL FLOWS ARE IN CFS UNLESS OTHERWISE NOTED.
6. VERTICAL DATUM IS NAVD88.
7. COORDINATION WITH THE LOCAL FLOODPLAIN ADMINISTRATOR FOR CELINA WAS COMPLETED ON 8-9-10
8. A STARTING WATER SURFACE ELEVATION WAS USED FOR THE 100-YEAR BASE FLOOD FROM THE FEMA EFFECTIVE MODEL.

Texas Department of Transportation
© 2011

FEMA UNNAMED TRIBUTARY HYDRAULIC DATA

SCALE: AS SHOWN

SHEET 3 OF 3

DESIGN NVS	FED.RD. DIV.NO.	STATE PROJECT NO.		HIGHWAY NO.
GRAPHICS NVS	6	(SEE TITLE SHEET)		SH 289
	STATE	DISTRICT	COUNTY	SHEET NO.
CHECK NVS	TEXAS	DALLAS	COLLIN	234
CHECK	CONTROL	SECTION	JOB	
	0091	04	055	

4/8/11 9:07 AM

PROP. MODEL CROSS SECTIONS SHOWN AREA = FLOW AREA (SQ. FT.) W.P. = WETTED PERIMETER (FT.) N = COEFFICIENT OF ROUGHNESS VEL. = VELOCITY (FT/S) Q = DISCHARGE (CFS)

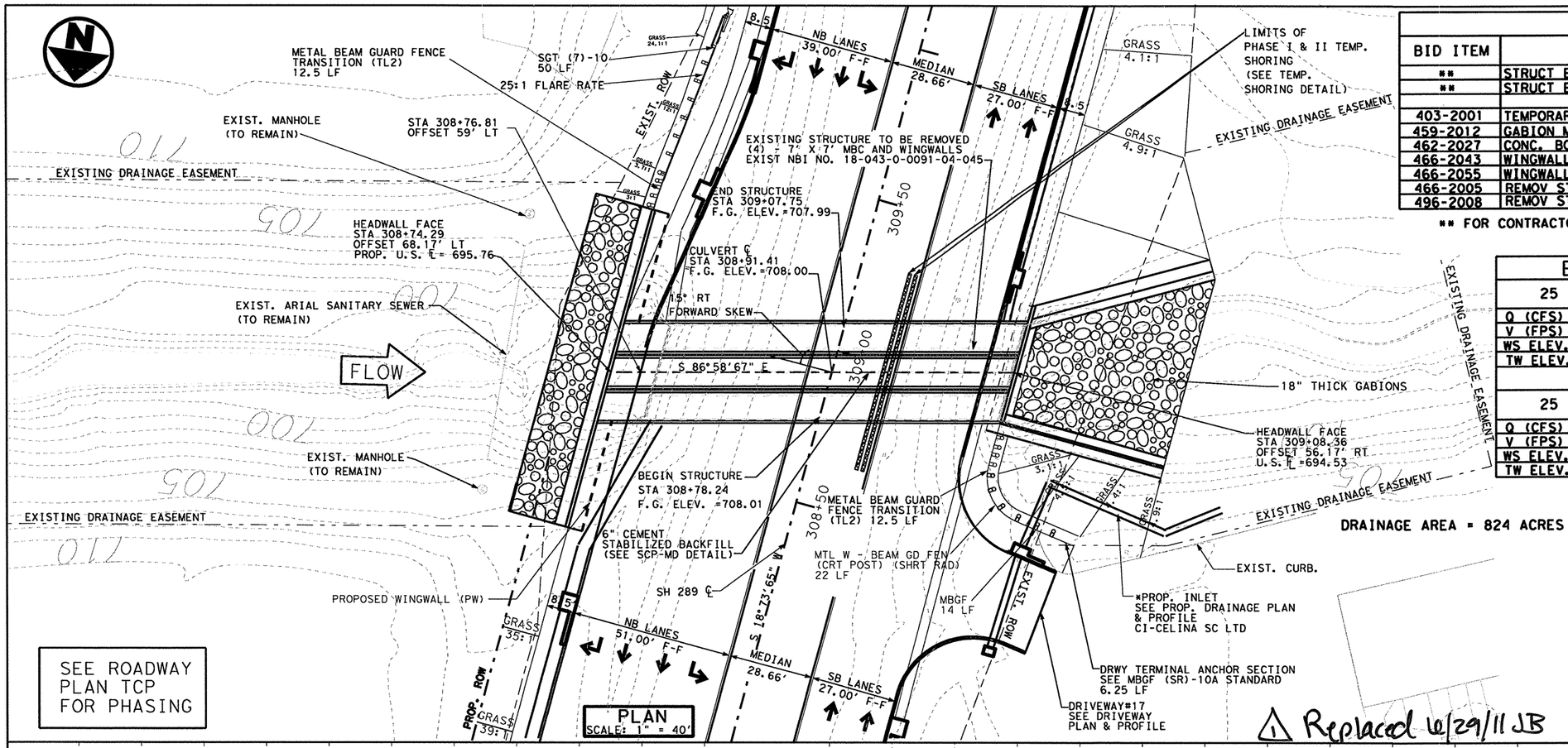

SEE ROADWAY PLAN TCP FOR PHASING

1 Replaced 6/29/11 JB

TABLE OF QUANTITIES

BID ITEM	DESCRIPTION	QUANTITY	UNIT
**	STRUCT EXCAV (CHANNEL)	314	CY
**	STRUCT EXCAV (BOX)	1030	CY
403-2001	TEMPORARY SPL SHORING	1175	SF
459-2012	GABION MATTRESS (18") (GALV.)	425	SY
462-2027	CONC. BOX CULV (9 FT X 8 FT)	387	LF
466-2043	WINGWALL (FW-S) (HW=13 FT)	1	EA
466-2055	WINGWALL (PW) (HW=11 FT)	1	EA
466-2005	REMOV STR (WINGWALL)	2	EA
496-2008	REMOV STR (BOX CULVERT)	432	LF

** FOR CONTRACTOR'S INFORMATION ONLY

EXISTING HYDRAULIC DATA

25 YEAR		100 YEAR		FEMA 100 YEAR	
Q (CFS)	1402	Q (CFS)	1879	Q (CFS)	1930
V (FPS)	8.51	V (FPS)	9.59	V (FPS)	9.84
WS ELEV.	702.85	WS ELEV.	704.71	WS ELEV.	704.95
TW ELEV.	701.38	TW ELEV.	702.40	TW ELEV.	702.50

PROPOSED HYDRAULIC DATA

25 YEAR		100 YEAR		FEMA 100 YEAR	
Q (CFS)	1402	Q (CFS)	1879	Q (CFS)	1930
V (FPS)	11.87	V (FPS)	13.09	V (FPS)	13.21
WS ELEV.	703.22	WS ELEV.	704.86	WS ELEV.	705.03
TW ELEV.	701.00	TW ELEV.	702.01	TW ELEV.	702.11

DRAINAGE AREA = 824 ACRES

REQUIRED STANDARDS:
1. PW: PARALLEL WINGS SKEWED/NON SKEWED
2. FW-S: FLARED WINGS 15° SKEW
3. SCP-9: BOX CULVERT PRECAST 9' SPAN
4. SCP-MD: PRECAST MISCELLANEOUS DETAILS
5. BCS: SUPPLEMENT WIND AND END TREATMENT
6. TYPE C402: COMBINATION RAIL
7. RAC

NOTES:

EXIST NBI NO. 18-043-0-0091-04-045

NEW NBI NO. 18-043-0-0091-04-348

DESIGN SPEED : 45 MPH
TRAFFIC EXISTING: 20,100 ADT YEAR 2010
PROJECTED : 31,000 ADT YEAR 2030
FUNCTIONAL CLASS: URBAN PRINCIPAL ARTERIAL

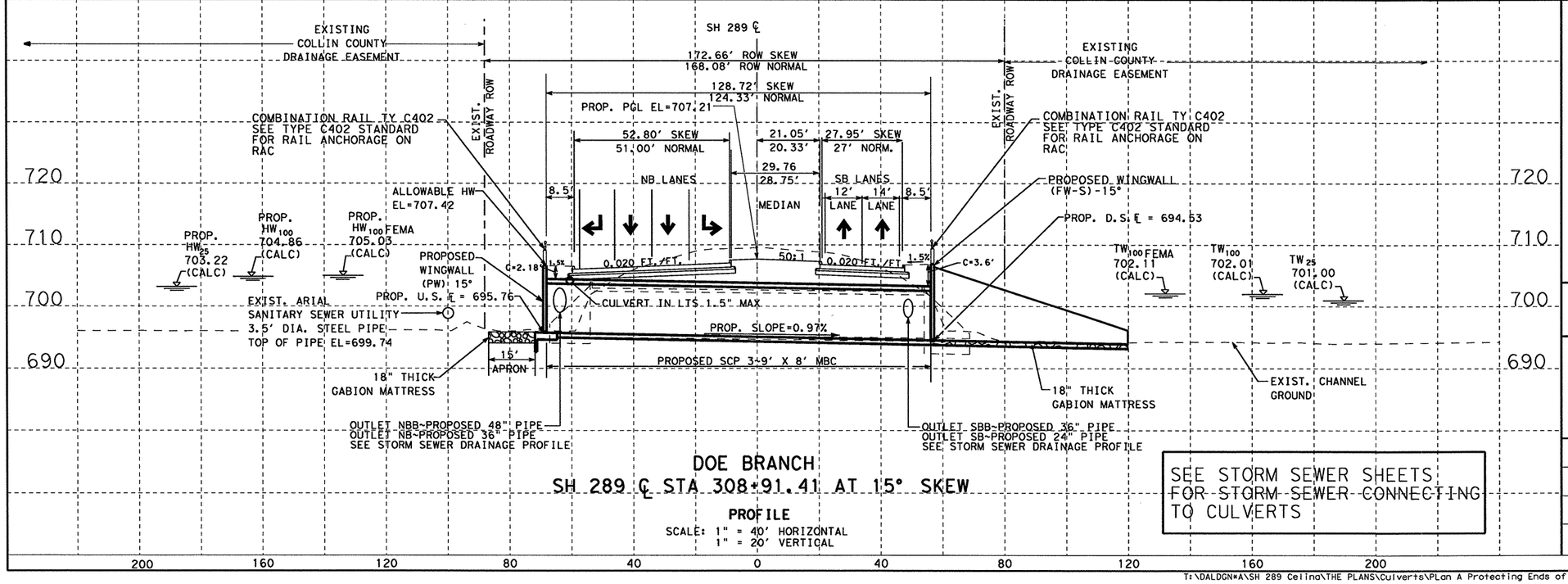

DOE BRANCH
SH 289 ℄ STA 308+91.41 AT 15° SKEW

PROFILE
SCALE: 1" = 40' HORIZONTAL
1" = 20' VERTICAL

SEE STORM SEWER SHEETS FOR STORM SEWER CONNECTING TO CULVERTS

STATE OF TEXAS
NICHOLAS VON SPENCER
93702
LICENSED PROFESSIONAL ENGINEER

Nicholas Von Spencer, P.E. 6-27-11
Signature of Registrant & Date

Texas Department of Transportation
© 2011

SH 289 DOE BRANCH CULVERT LAYOUT

SCALE: HORIZ: 1"=40' VERT: 1"=20' SHEET 1 OF 2

DESIGN	FED. RD. DIV. NO.	STATE PROJECT NO.			HIGHWAY NO.
NVS	6	(SEE TITLE SHEET)			SH 289
GRAPHICS NVS	STATE	DISTRICT	COUNTY		SHEET NO.
CHECK NVS	TEXAS	DALLAS	COLLIN		235
CHECK	CONTROL	SECTION	JOB		
	0091	04	055		

12:51:47 PM
6/24/2011

T:\DALDGN*A\SH 289 Celina\THE PLANS\Culverts\PLan A Protecting Ends of Bridge Class Culverts\Culvert #1 FEMA Doe Branch .dgn

R-201104-01

EXISTING HYDRAULIC DATA					
25 YEAR		100 YEAR		FEMA 100 YEAR	
Q (CFS)	1402	Q (CFS)	1879	Q (CFS)	1930
V (FPS)	8.51	V (FPS)	9.59	V (FPS)	9.84
WS ELEV.	702.85	WS ELEV.	704.71	WS ELEV.	704.95
TW ELEV.	701.38	TW ELEV.	702.40	TW ELEV.	702.50

PROPOSED HYDRAULIC DATA					
25 YEAR		100 YEAR		FEMA 100 YEAR	
Q (CFS)	1402	Q (CFS)	1879	Q (CFS)	1930
V (FPS)	11.87	V (FPS)	13.09	V (FPS)	13.21
WS ELEV.	703.22	WS ELEV.	704.86	WS ELEV.	705.03
TW ELEV.	701.00	TW ELEV.	702.01	TW ELEV.	702.11

DRAINAGE AREA = 824 ACRES

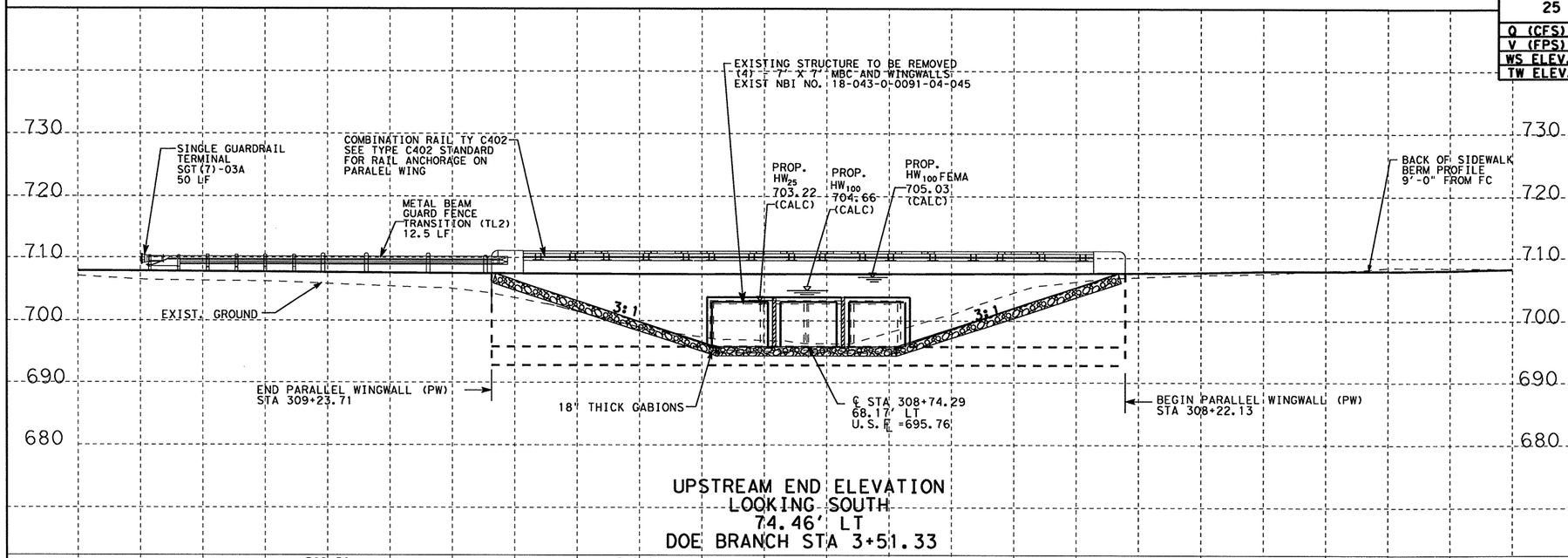

UPSTREAM END ELEVATION
LOOKING SOUTH
74.46' LT
DOE BRANCH STA 3+51.33

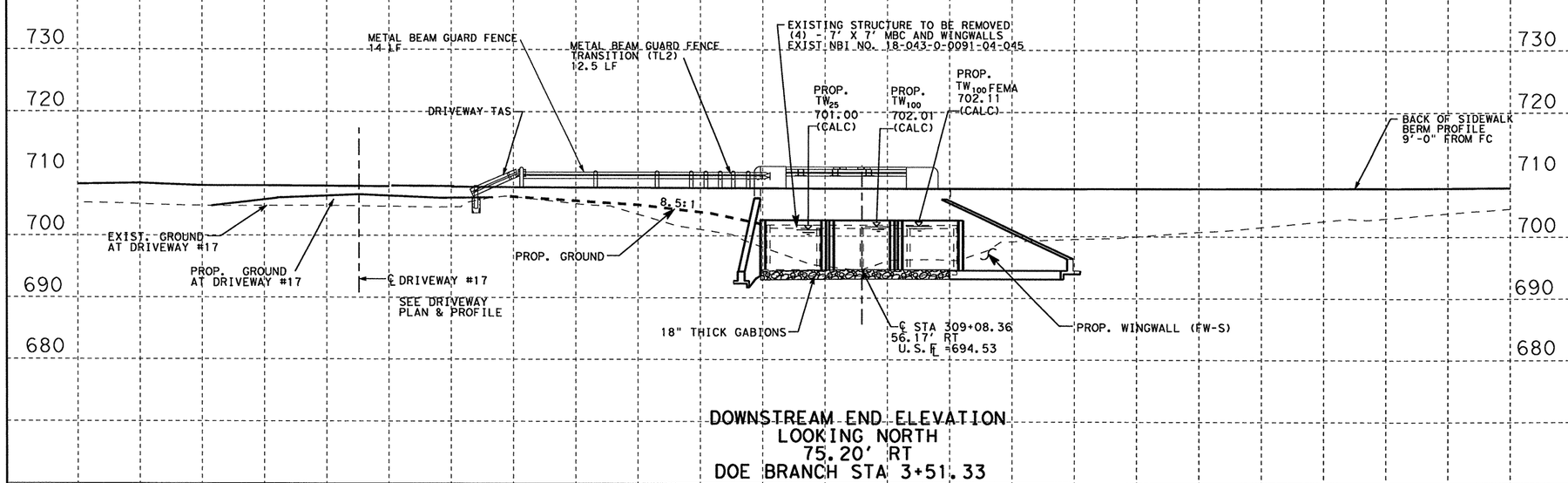

DOWNSTREAM END ELEVATION
LOOKING NORTH
75.20' RT
DOE BRANCH STA 3+51.33

STATE OF TEXAS
NICHOLAS VON SPENCER
93702
LICENSED
PROFESSIONAL ENGINEER

Nicholas V Spencer, P.E. 4-11-11
Signature of Registrant & Date

Texas Department of Transportation
© 2011

SH 289
DOE BRANCH
CULVERT LAYOUT

SCALE:1"=20' SHEET 2 OF 2

DESIGN	FED. RD. DIV. NO.	STATE PROJECT NO.		HIGHWAY NO.
NVS	6	(SEE TITLE SHEET)		SH 289
GRAPHICS	STATE	DISTRICT	COUNTY	SHEET NO.
NVS	TEXAS	DALLAS	COLLIN	236
CHECK	CONTROL	SECTION	JOB	
NVS	0091	04	055	

T:\DALDGN\SH 289 Celina\THE PLANS\Culverts\Plan A Protecting Ends of Bridge Class Culverts\Culvert #1 FEMA Doe Branch .dgn

4/11/2011 1:42:33 PM

R-201104-01

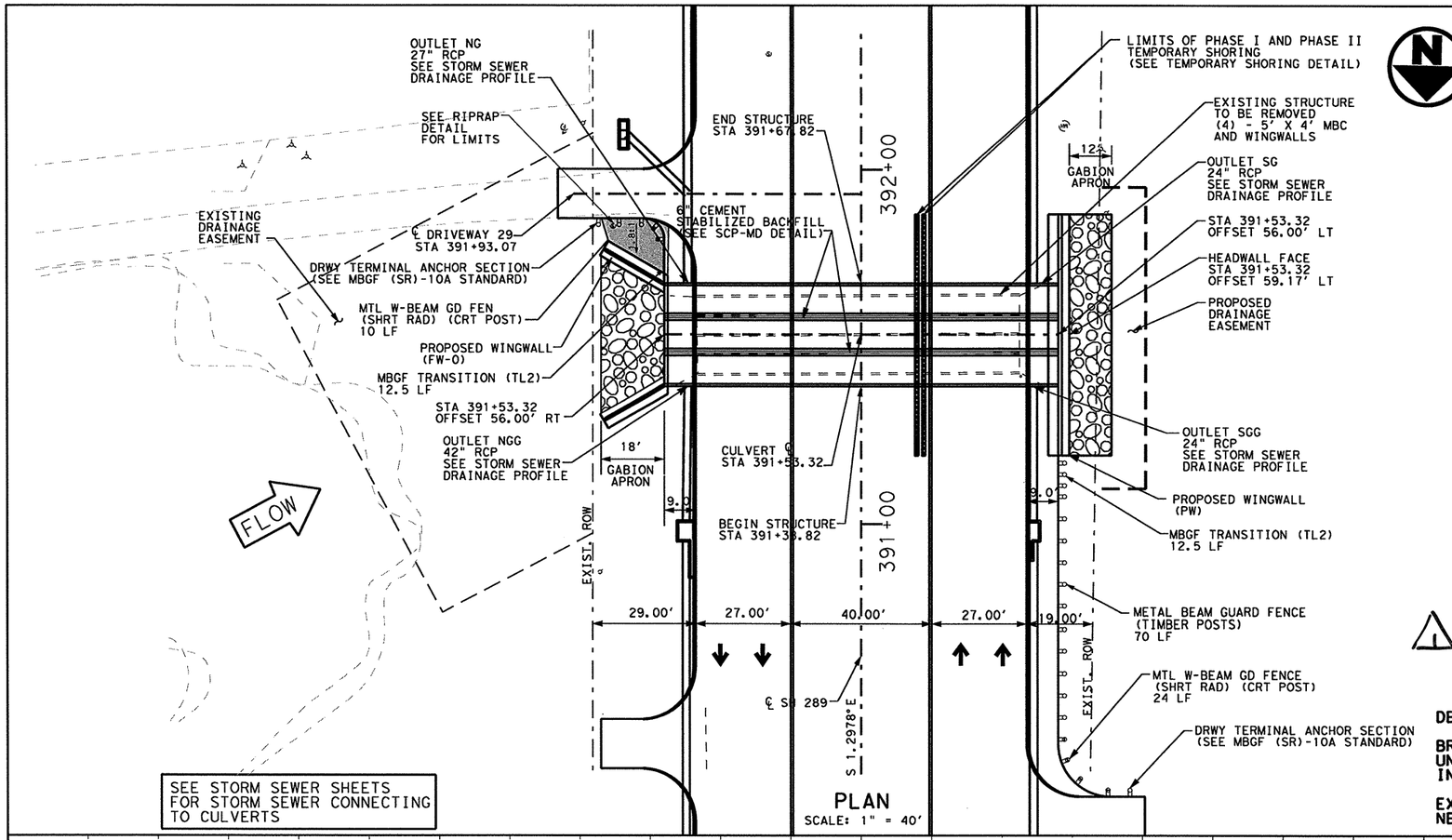

PLAN
SCALE: 1" = 40'

TABLE OF QUANTITIES			
BID ITEM	DESCRIPTION	QUANTITY	UNIT
**	STRUCT EXCAV (CHANNEL)	73	CY
**	STRUCT EXCAV (BOX)	498	CY
403-2001	TEMPORARY SPL SHORING	1175	SF
459-2012	GABION MATTRESS (18") (GALV.)	159	SY
462-2020	CONC. BOX CULV (8 FT X 5 FT)	336	LF
466-2026	WINGWALL (FW-0) (HW=10 FT)	1	EA
466-2054	WINGWALL (PW) (HW=10 FT)	1	EA
496-2005	REMOV STR (WINGWALL)	2	EA
496-2008	REMOV STR (BOX CULVERT)	364	LF

** FOR CONTRACTOR'S INFORMATION ONLY

EXISTING HYDRAULIC DATA			
25 YEAR		100 YEAR	
Q (CFS)	1396	Q (CFS)	1851
V (FPS)	12.99	V (FPS)	12.13
WS ELEV.	677.44	WS ELEV.	677.96

PROPOSED HYDRAULIC DATA			
25 YEAR		100 YEAR	
Q (CFS)	1396	Q (CFS)	1851
V (FPS)	10.41	V (FPS)	11.89
WS ELEV.	676.80	WS ELEV.	678.05

DRAINAGE AREA = 434 ACRES

REQUIRED STANDARDS:
1. PW: PARALLEL WINGS SKEWED/NON SKEWED
2. FW-0: FLARED WINGS 0° SKEW
3. SCP-8: BOX CULVERT PRECAST 8' SPAN
4. SCP-MD: PRECAST MISCELLANEOUS DETAILS
5. BCS: SUPPLEMENT WIND AND END TREATMENT
6. TYPE C402: COMBINATION RAIL
7. RAC

⚠ Replaced 6/29/11 JB

DESIGN NOTES:

BRIDGE DESIGNED FOR HS 93 LOADING UNDER 2007 AASHTO LRFD SPEC. AND INTERIM REVISIONS THERETO

EXIST NBI NO. 18-043-0-0091-04-046
NEW NBI NO. 18-043-0-0091-04-349

DESIGN SPEED : 45 MPH
TRAFFIC EXISTING: 20,100 ADT YEAR 2010
PROJECTED : 31,000 ADT YEAR 2030
FUNCTIONAL CLASS: URBAN PRINCIPAL ARTERIAL

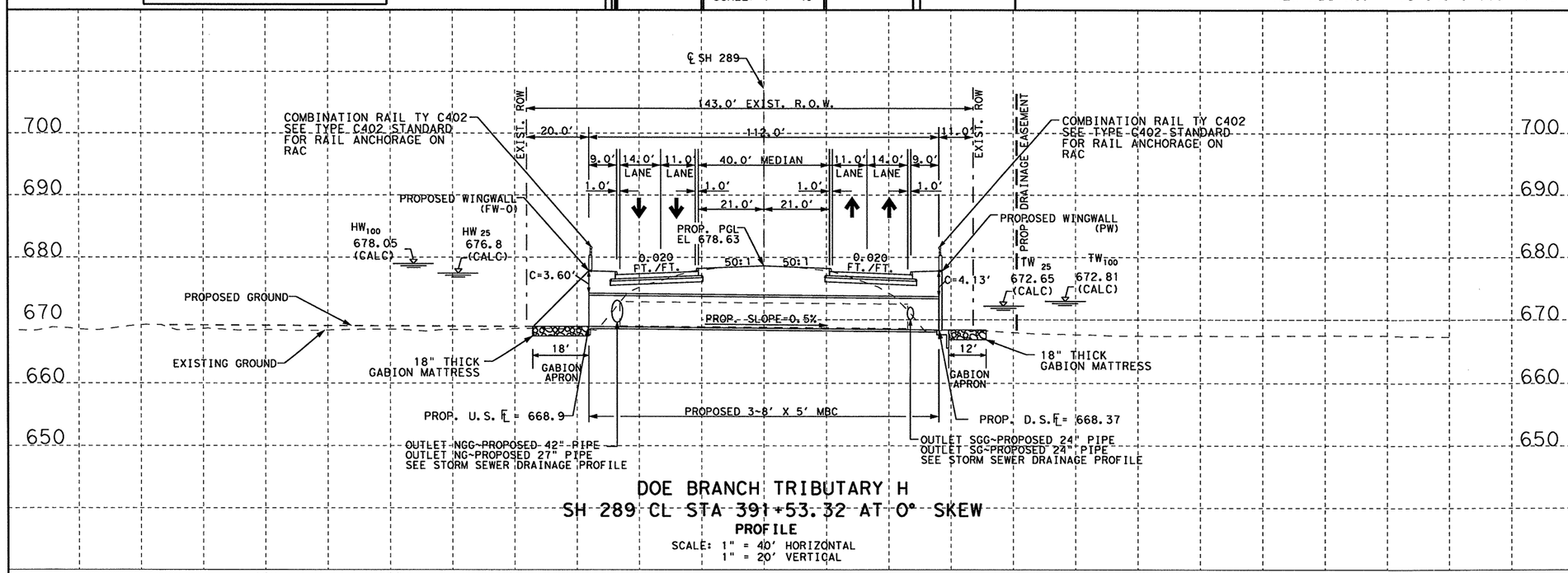

DOE BRANCH TRIBUTARY H
SH 289 CL STA 391+53.32 AT 0° SKEW
PROFILE
SCALE: 1" = 40' HORIZONTAL
1" = 20' VERTICAL

STATE OF TEXAS
NICHOLAS VON SPENCER
93702
LICENSED
PROFESSIONAL ENGINEER

Signature of Registrant & Date, P.E. 6-27-11

Texas Department of Transportation
© 2011

SH 289
DOE BRANCH TRIBUTARY H
CULVERT LAYOUT

SCALE: HORIZ: 1"=40' VERT: 1"=20' SHEET 1 OF 2

DESIGN	FED. RD. DIV. NO.	STATE PROJECT NO.		HIGHWAY NO.
AMW	6	(SEE TITLE SHEET)		SH 289
GRAPHICS AMW	STATE	DISTRICT	COUNTY	SHEET NO.
CHECK NVS	TEXAS	DALLAS	COLLIN	237
CHECK NVS	CONTROL 0091	SECTION 04	JOB 055	

12:52:40 PM
6/24/2011

T:\DALDGN*A\SH 289 Celina\THE PLANS\Culverts\PLan A Protecting Ends of Bridge Class Culverts\Culvert #5 FEMA Doe Branch H.dgn

B-201104-01

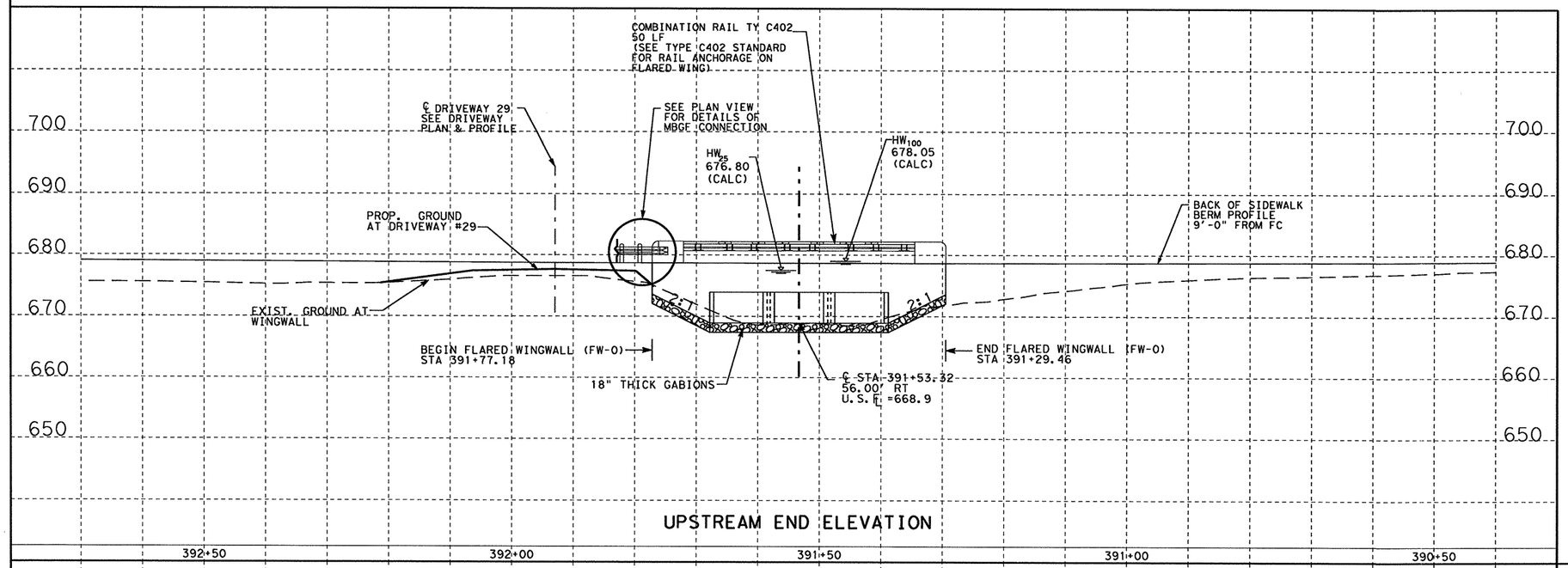

UPSTREAM END ELEVATION

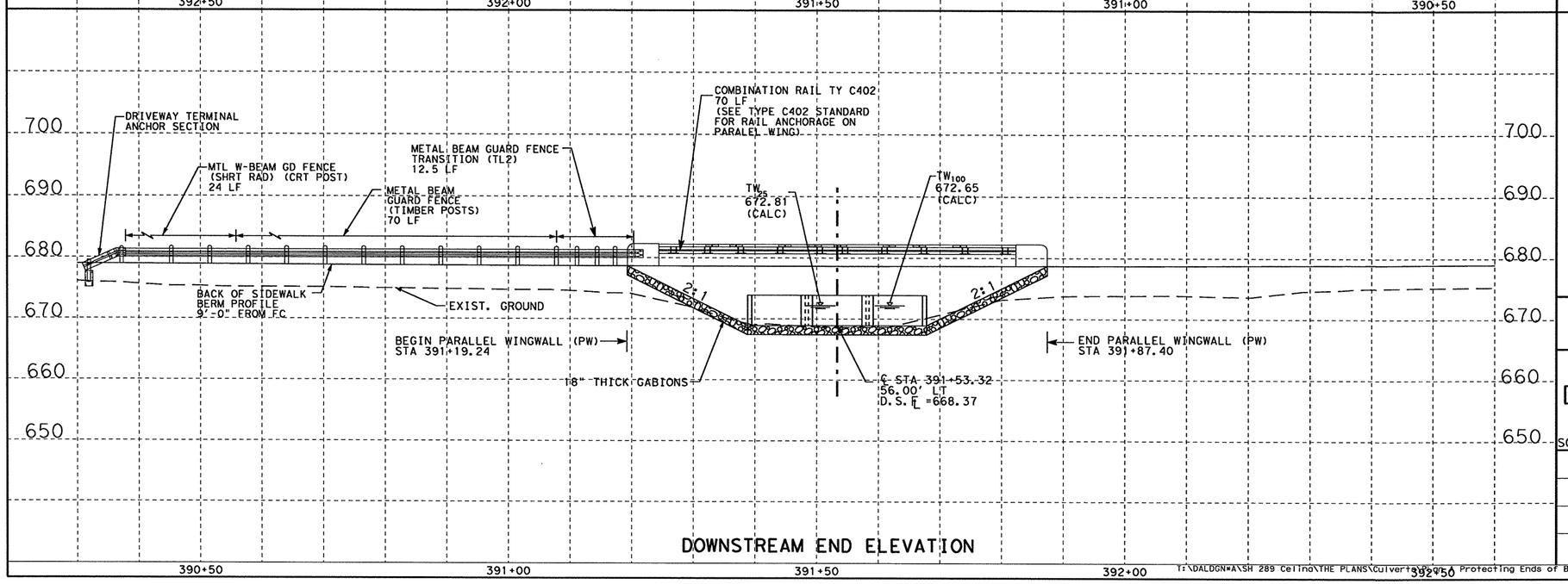

DOWNSTREAM END ELEVATION

STATE OF TEXAS
NICHOLAS VON SPENCER
93702
LICENSED
PROFESSIONAL ENGINEER

Nicholas V Spencer, P.E. 4-11-11
Signature of Registrant & Date

Texas Department of Transportation
© 2011

SH 289
DOE BRANCH TRIBUTARY H
CULVERT LAYOUT

SCALE:1"=20' SHEET 2 OF 2

DESIGN	FED. RD. DIV. NO.	STATE PROJECT NO.		HIGHWAY NO.
AMW	6	(SEE TITLE SHEET)		SH 289
GRAPHICS	STATE	DISTRICT	COUNTY	SHEET NO.
AMW	TEXAS	DALLAS	COLLIN	238
CHECK	CONTROL	SECTION	JOB	
NVS	0091	04	055	
CHECK				
NVS				

I:\DALDGN*A\SH 289 Ceiling\THE PLANS\Culverts\Part 4 Protecting Ends of Bridge Class Culverts\Culvert #5 FEMA Doe Branch H.dgn

4/11/2011 1:41:33 PM

R-201104-01

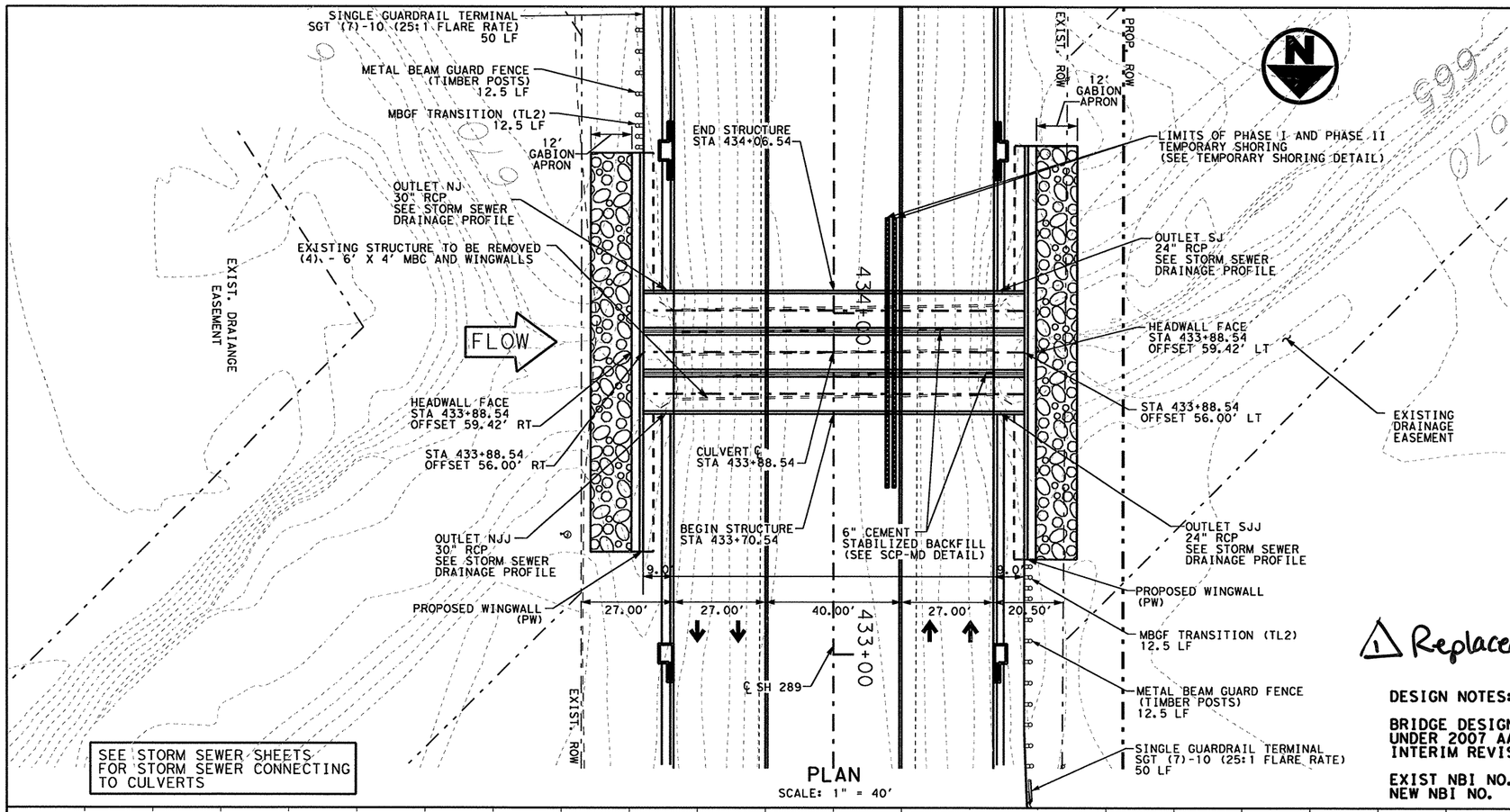

SEE STORM SEWER SHEETS FOR STORM SEWER CONNECTING TO CULVERTS

PLAN
SCALE: 1" = 40'

TABLE OF QUANTITIES			
BID ITEM	DESCRIPTION	QUANTITY	UNIT
**	STRUCT EXCAV (CHANNEL)	124	CY
**	STRUCT EXCAV (BOX)	623	CY
403-2001	TEMPORARY SPL SHORING	1523	SF
459-2012	GABION MATTRESS (18") (GALV.)	316	SY
462-2029	CONC. BOX CULV (10 FT X 5 FT)	336	LF
466-2055	WINGWALL (PW) (HW=11 FT)	2	EA
466-2005	REMOV STR (WINGWALL)	2	EA
496-2008	REMOV STR (BOX CULVERT)	372	LF

** FOR CONTRACTOR'S INFORMATION ONLY

EXISTING HYDRAULIC DATA			
25 YEAR		100 YEAR	
Q (CFS)	1847.00	Q (CFS)	2427.00
V (FPS)	15.54	V (FPS)	15.06
WS ELEV.	677.89	WS ELEV.	678.33

PROPOSED HYDRAULIC DATA			
25 YEAR		100 YEAR	
Q (CFS)	1847.00	Q (CFS)	2427.00
V (FPS)	12.31	V (FPS)	16.18
WS ELEV.	674.01	WS ELEV.	677.02

DRAINAGE AREA = 691.59 ACRES

REQUIRED STANDARDS:
1. PW: PARALLEL WINGS SKEWED/NON SKEWED
2. SCP-10: BOX CULVERT PRECAST 10' SPAN
3. SCP-MD: PRECAST MISCELLANEOUS DETAILS
4. BCS: SUPPLEMENT WING AND END TREATMENT
5. TYPE C402: COMBINATION RAIL
6. RAC

1 Replaced 6/29/11 JB

DESIGN NOTES:

BRIDGE DESIGNED FOR HS 93 LOADING UNDER 2007 AASHTO LRFD SPEC. AND INTERIM REVISIONS THERETO

EXIST NBI NO. 18-043-0-0091-04-047
NEW NBI NO. 18-043-0-0091-04-350

DESIGN SPEED : 45 MPH
TRAFFIC EXISTING: 20,100 ADT YEAR 2010
PROJECTED : 31,000 ADT YEAR 2030
FUNCTIONAL CLASS: URBAN PRINCIPAL ARTERIAL

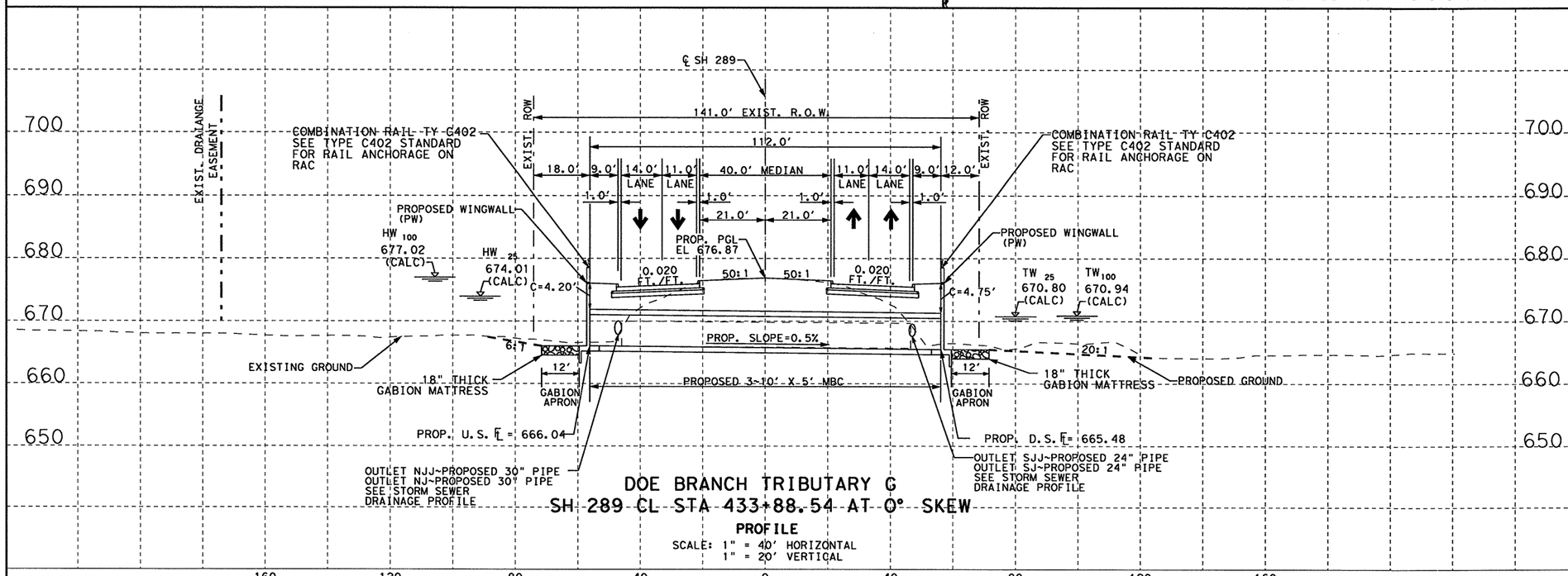

DOE BRANCH TRIBUTARY G
SH 289 CL STA 433+88.54 AT 0° SKEW

PROFILE
SCALE: 1" = 40' HORIZONTAL
1" = 20' VERTICAL

STATE OF TEXAS
NICHOLAS VON SPENCER
93702
LICENSED PROFESSIONAL ENGINEER

Signature of Registrant & Date, P.E. 6-27-11

Texas Department of Transportation
© 2011

SH 289
DOE BRANCH TRIBUTARY G CULVERT LAYOUT

SCALE: HORIZ: 1"=40' VERT: 1"=20' SHEET 1 OF 2

DESIGN	FED. RD. DIV. NO.	STATE PROJECT NO.		HIGHWAY NO.
AMW	6	(SEE TITLE SHEET)		SH 289
GRAPHICS AMW	STATE	DISTRICT	COUNTY	SHEET NO.
CHECK NVS	TEXAS	DALLAS	COLLIN	239
CHECK NVS	CONTROL	SECTION	JOB	
	0091	04	055	

6/27/2011 9:07:15 AM

T:\DALDGN#A\SH 289 Celina\THE PLANS\Culverts\Plan A Protecting Ends of Bridge Class Culverts\Culvert #7 FEMA Doe Branch G.dgn

R-201104-01

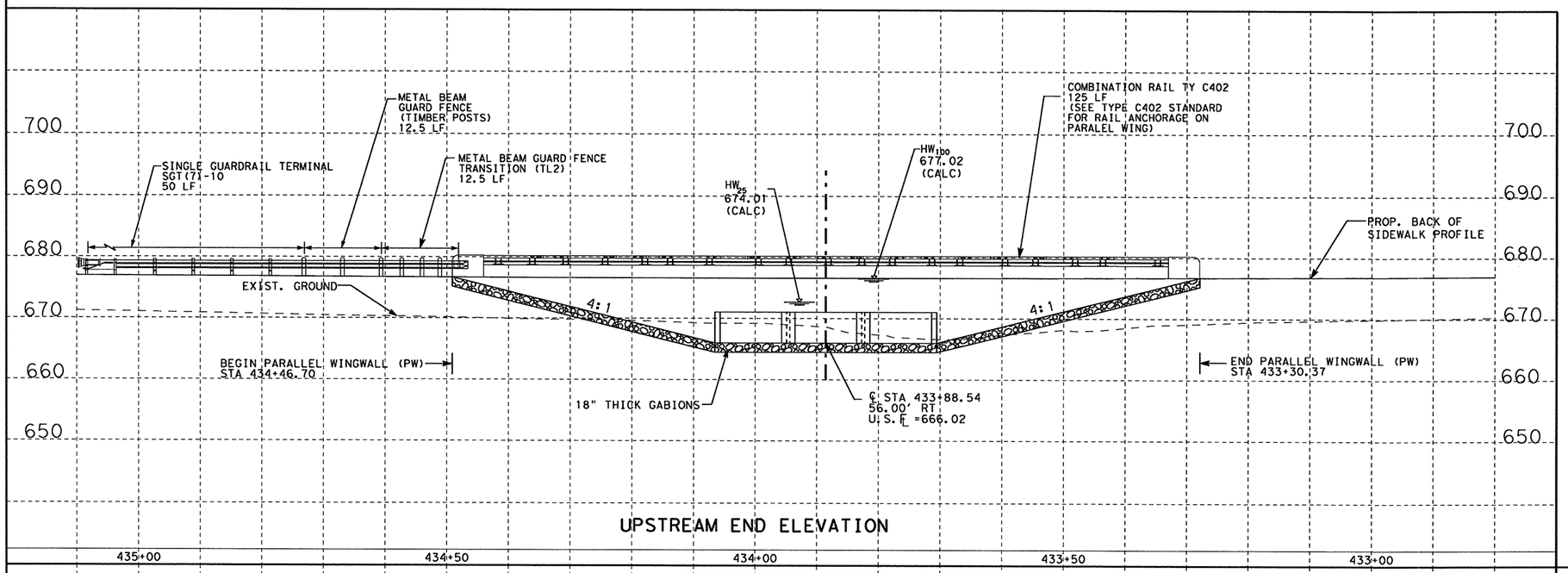

UPSTREAM END ELEVATION

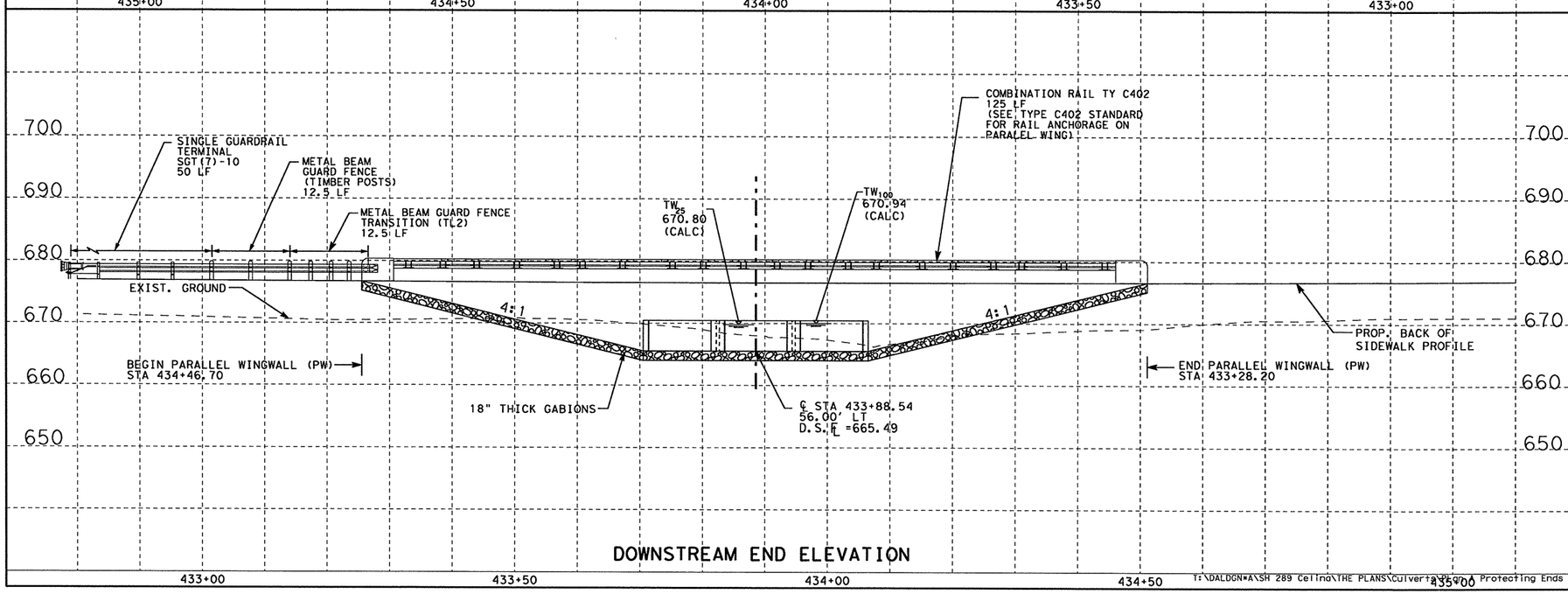

DOWNSTREAM END ELEVATION

STATE OF TEXAS
NICHOLAS VON SPENCER
93702
LICENSED PROFESSIONAL ENGINEER

Nicholas V Spencer, P.E. 4-11-11
Signature of Registrant & Date

Texas Department of Transportation
© 2011

SH 289
DOE BRANCH TRIBUTARY G
CULVERT LAYOUT

SCALE:1"=20' SHEET 2 OF 2

DESIGN	FED. RD. DIV. NO.	STATE PROJECT NO.		HIGHWAY NO.
AMW	6	(SEE TITLE SHEET)		SH 289
GRAPHICS AMW	STATE	DISTRICT	COUNTY	SHEET NO.
CHECK NVS	TEXAS	DALLAS	COLLIN	240
CHECK NVS	CONTROL 0091	SECTION 04	JOB 055	

T:\DALDGN*A\SH 289 Celina\THE PLANS\Culverts\Plan A Protecting Ends of Bridge Class Culverts\Culvert #7 FEMA Doe Branch G.dgn

4/11/2011 1:15:18 PM

R-201104-01

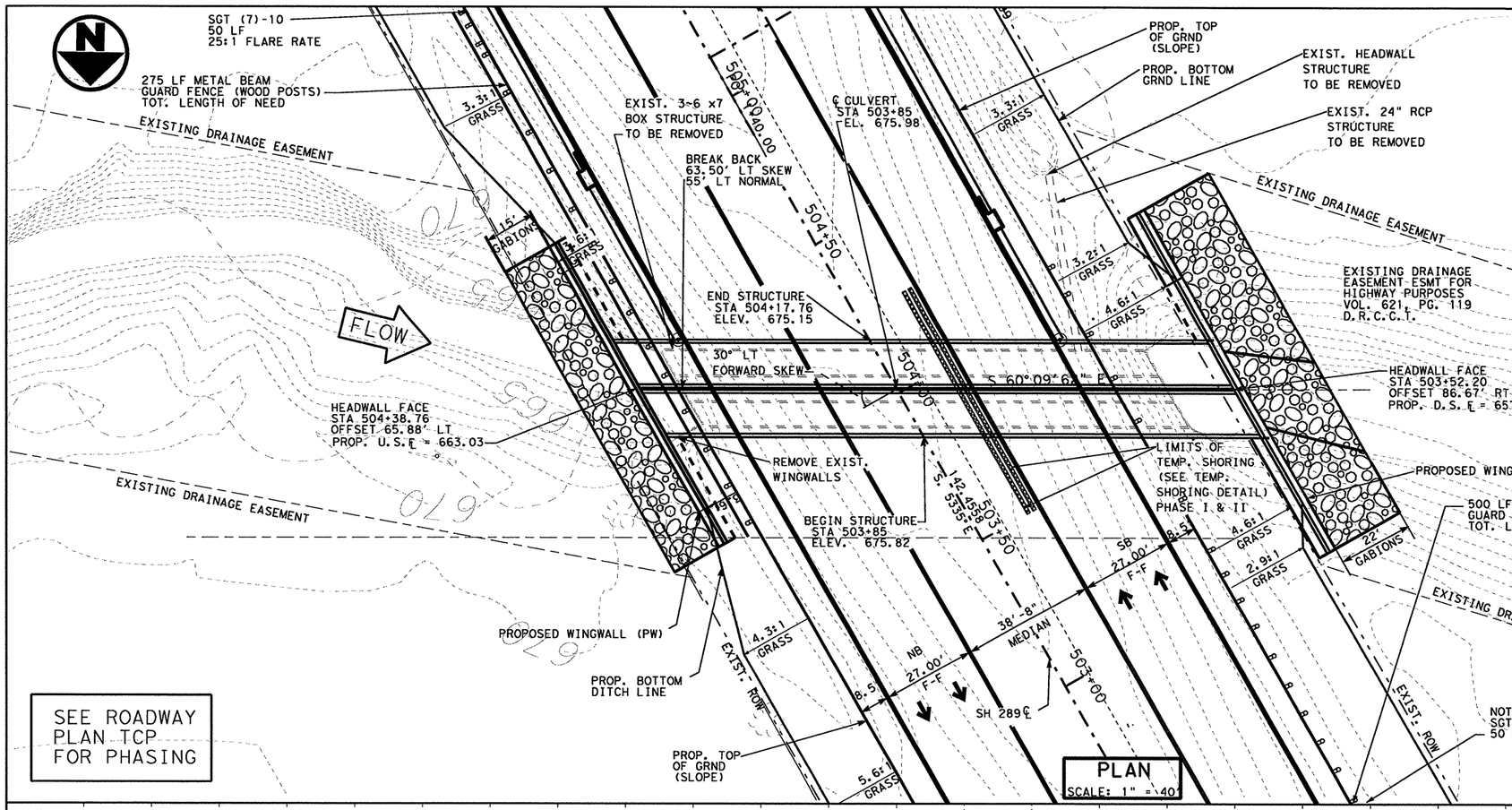

SEE ROADWAY
PLAN TCP
FOR PHASING

PLAN
SCALE: 1" = 40'

TABLE OF QUANTITIES			
BID ITEM	DESCRIPTION	QUANTITY	UNIT
**	STRUCT EXCAV (CHANNEL)	281	CY
**	STRUCT EXCAV (BOX)	952	CY
403-2001	TEMPORARY SPL SHORING	1852	SF
459-2012	GABION MATTRESS (18") (GALV.)	447	SY
462-2062	CONC. BOX CULV (12 FT X 6 FT)	357	LF
466-2054	WINGWALL (PW) (HW=10 FT)	1	EA
466-2056	WINGWALL (PW) (HW=12 FT)	1	EA
466-2005	REMOV STR (WINGWALL)	2	EA
496-2008	REMOV STR (BOX CULVERT)	372	LF

** FOR CONTRACTOR'S INFORMATION ONLY

EXISTING HYDRAULIC DATA			
25 YEAR		100 YEAR	
Q (CFS)	1864	Q (CFS)	2465
V (FPS)	14.79	V (FPS)	18.74
WS ELEV.	672.47	WS ELEV.	676.18
TW ELEV.	665.02	TW ELEV.	665.47

PROPOSED HYDRAULIC DATA			
25 YEAR		100 YEAR	
Q (CFS)	1864	Q (CFS)	2465
V (FPS)	12.94	V (FPS)	17.12
WS ELEV.	671.79	WS ELEV.	674.40
TW ELEV.	664.71	TW ELEV.	664.64

DRAINAGE AREA = 706 ACRES

NOTES:

EXIST NBI NO. 18-043-0-0091-04-048

NEW NBI NO. 18-043-0-0091-04-351

REQUIRED STANDARDS:
1. PW: PARALLEL WINGS SKEWED/NON SKEWED
2. SCP-12 : PRECAST BOX CULVERT 12' SPAN
3. BCS: SUPPLEMENT WING AND END TREATMENT

DESIGN SPEED : 45 MPH
TRAFFIC EXISTING: 20,100 ADT YEAR 2010
PROJECTED : 31,000 ADT YEAR 2030
FUNCTIONAL CLASS: URBAN PRINCIPAL ARTERIAL

△1 Replaced 6/29/11 JB

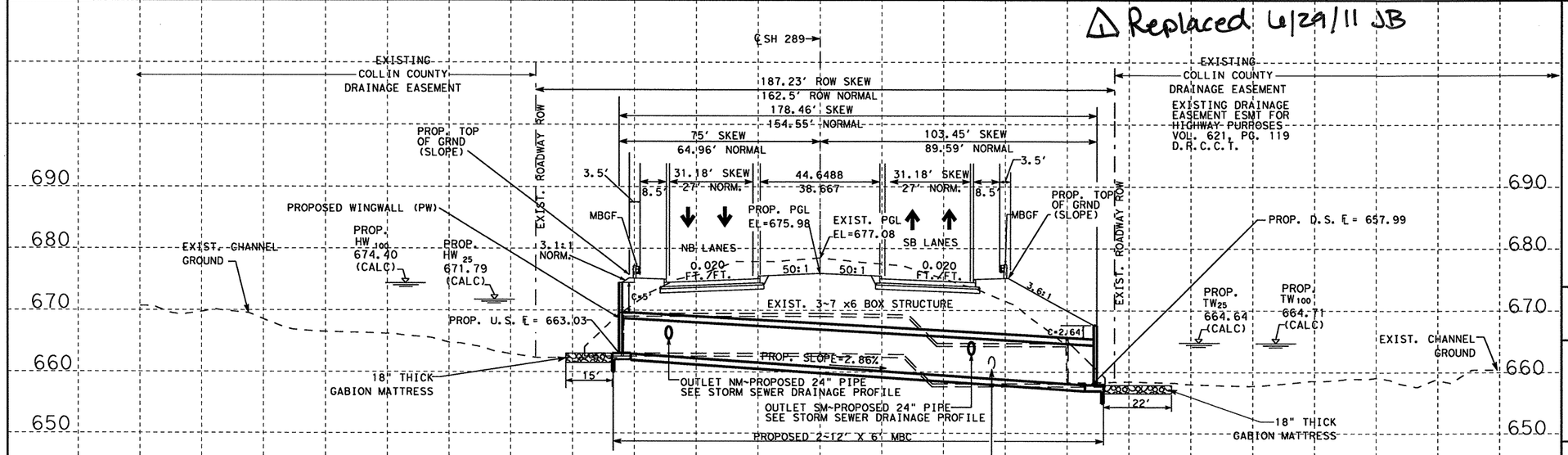

SEE STORM SEWER SHEETS
FOR STORM SEWER CONNECTING
TO CULVERTS

PROFILE
SCALE: 1" = 40' HORIZONTAL
1" = 20' VERTICAL

DOE BRANCH UNNAMED TRIBUTARY #2 SH 289 ℄ STA 504+01.38 AT 30° SKEW
DRAWN SKEWED ALONG CULVERT CL

STATE OF TEXAS
NICHOLAS VON SPENCER
93702
LICENSED
PROFESSIONAL ENGINEER

Signature of Registrant & Date, P.E. 6-27-11

Texas Department of Transportation
© 2011

SH 289
DOE BRANCH
UNNAMED TRIBUTARY #2
CULVERT LAYOUT

SCALE: HORIZ: 1"=40' VERT: 1"=20' SHEET 1 OF 2

DESIGN	FED. RD. DIV. NO.	STATE PROJECT NO.		HIGHWAY NO.
NVS	6	(SEE TITLE SHEET)		SH 289
GRAPHICS	STATE	DISTRICT	COUNTY	SHEET NO.
NVS	TEXAS	DALLAS	COLLIN	241
CHECK	CONTROL	SECTION	JOB	
NVS	0091	04	055	
CHECK				

6/24/2011 12:53:50 PM

T:\DALDGN\A\SH 289 Celina\THE PLANS\Culverts\Plan A Protecting Ends of Bridge Class Culverts\Culvert #10 FEMA Unnamed Trib.dgn

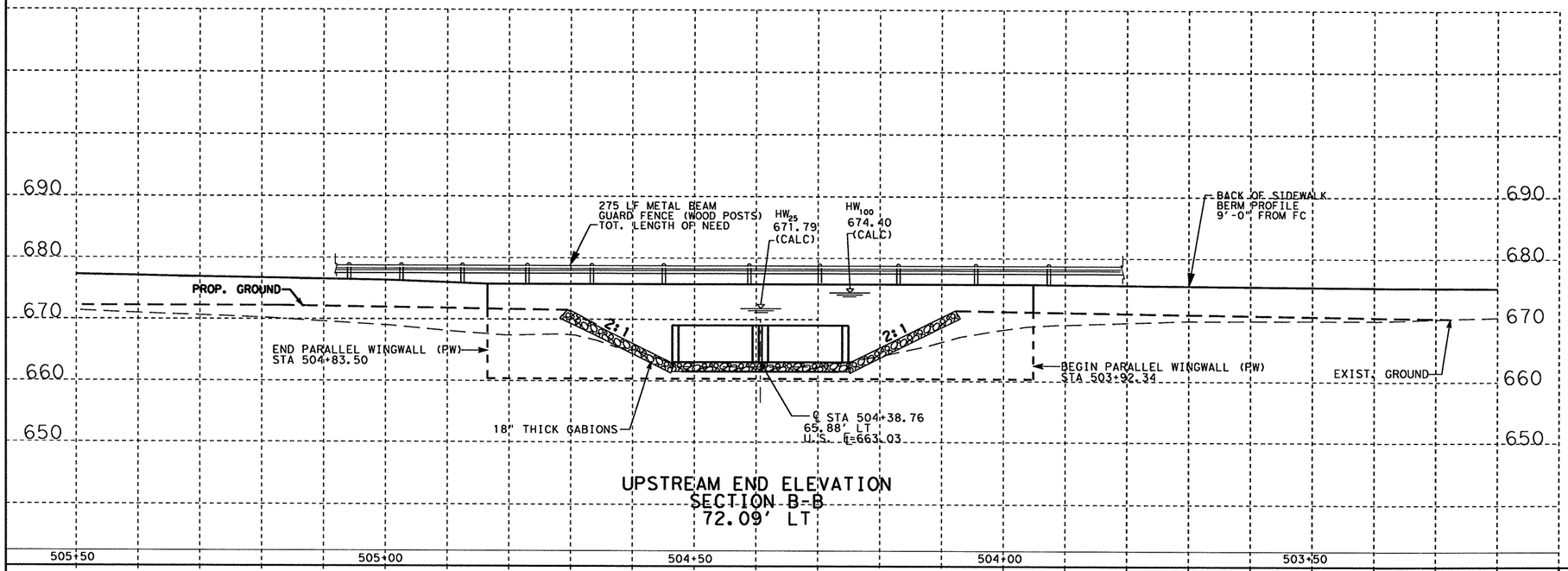

UPSTREAM END ELEVATION
SECTION B-B
72.09' LT

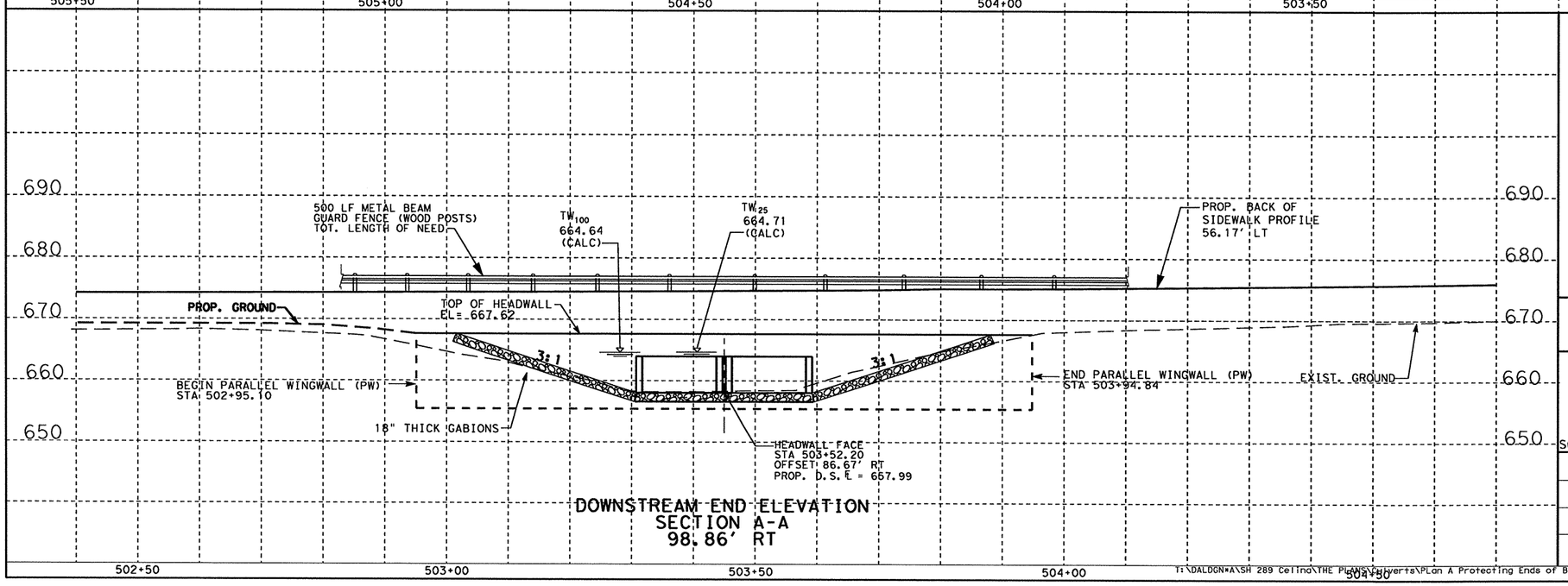

DOWNSTREAM END ELEVATION
SECTION A-A
98.86' RT

STATE OF TEXAS
NICHOLAS VON SPENCER
93702
LICENSED PROFESSIONAL ENGINEER

Nicholas Von Spencer, P.E. 4-11-11
Signature of Registrant & Date

Texas Department of Transportation
© 2011

SH 289
DOE BRANCH
UNNAMED TRIBUTARY #2
END ELEVATIONS

SCALE: 1"=20' SHEET 2 OF 2

DESIGN	FED. RD. DIV. NO.	STATE PROJECT NO.		HIGHWAY NO.
NVS	6	(SEE TITLE SHEET)		SH 289
GRAPHICS NVS	STATE	DISTRICT	COUNTY	SHEET NO.
CHECK NVS	TEXAS	DALLAS	COLLIN	242
CHECK	CONTROL	SECTION	JOB	
	0091	04	055	

I:\DALDGN*A\SH 289 Celina\THE PLANS\Culverts\Plan A Protecting Ends of Bridge Class Culverts\Culvert #10 FEMA Unnamed Trib.dgn

4/11/2011 1:43:19 PM

R-201104-01

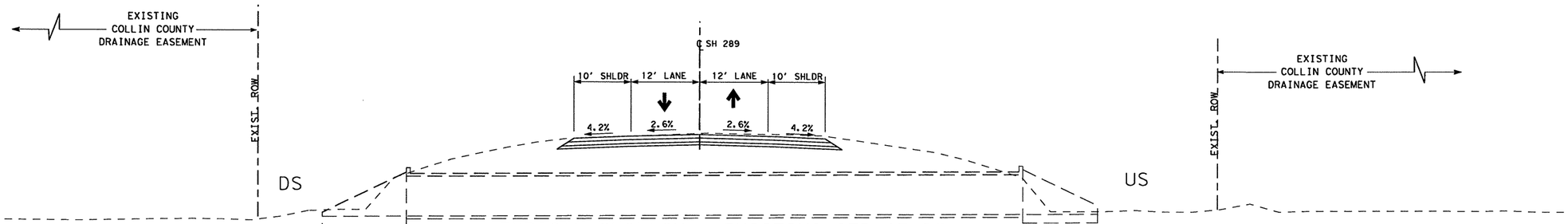

TYPICAL SECTION - EXISTING STRUCTURE

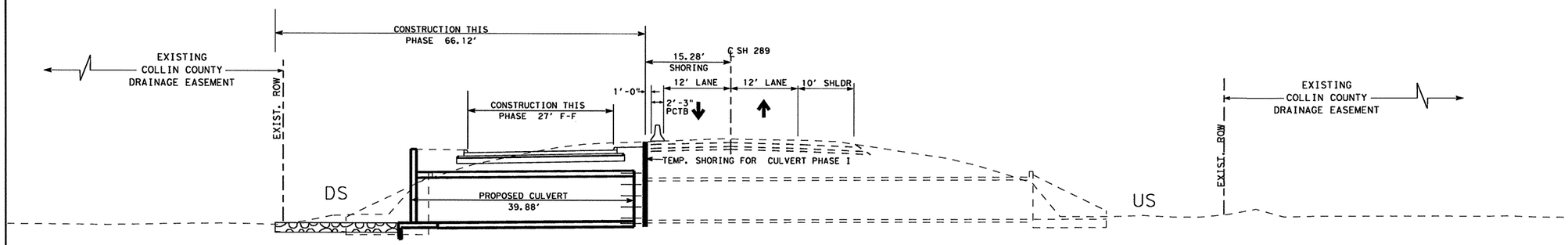

TYPICAL SECTION - PHASE 1 CONSTRUCTION
BUILD DOWNSTREAM SIDE

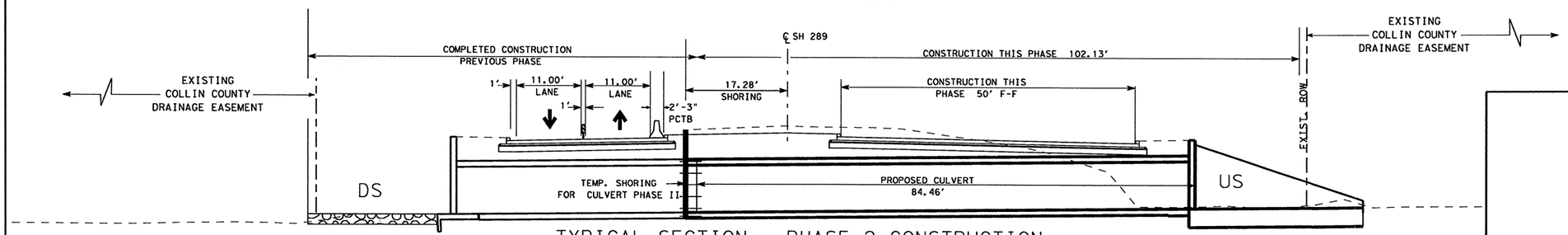

TYPICAL SECTION - PHASE 2 CONSTRUCTION
BUILD UPSTREAM SIDE

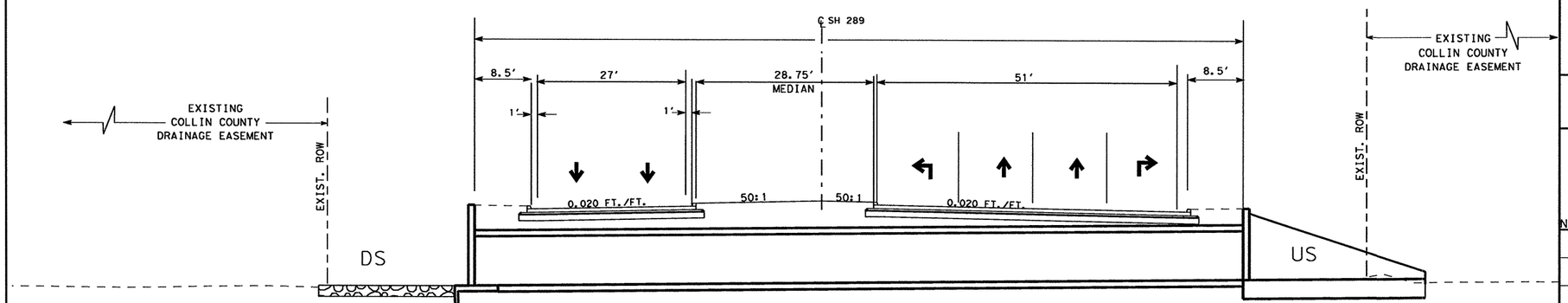

TYPICAL SECTION - COMPLETED STRUCTURE

STATE OF TEXAS
NICHOLAS VON SPENCER
93702
LICENSED
PROFESSIONAL ENGINEER

Signature of Registrant & Date, P.E. 4-11-11

Texas Department of Transportation
© 2011

SH 289
DOE BRANCH
PHASE CONSTRUCTION

NO SCALE — SHEET 1 OF 1

DESIGN	FED. RD. DIV. NO.	STATE PROJECT NO.		HIGHWAY NO.
NVS	6	(SEE TITLE SHEET)		SH 289
GRAPHICS	STATE	DISTRICT	COUNTY	SHEET NO.
NVS	TEXAS	DALLAS	COLLIN	243
CHECK	CONTROL	SECTION	JOB	
NVS	0091	04	055	
CHECK				

4/11/2011 11:42:40 PM

T:\DALDGN*A\SH 289 Collno\THE PLANS\Culverts\Plan A Protecting Ends of Bridge Class Culverts\Culvert #1 FEMA Doe Branch .dgn

R-201104-01

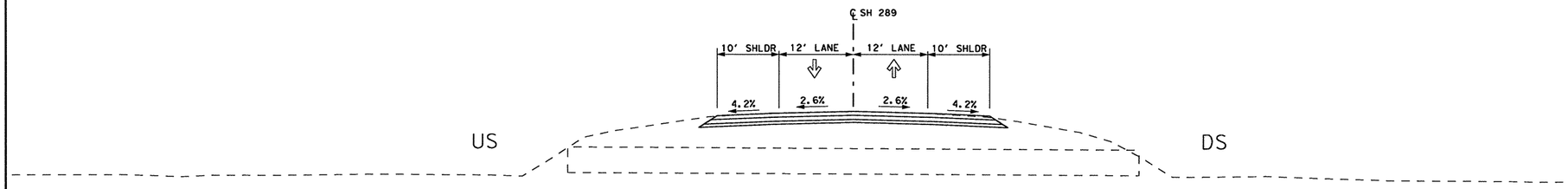

TYPICAL SECTION - EXISTING STRUCTURE

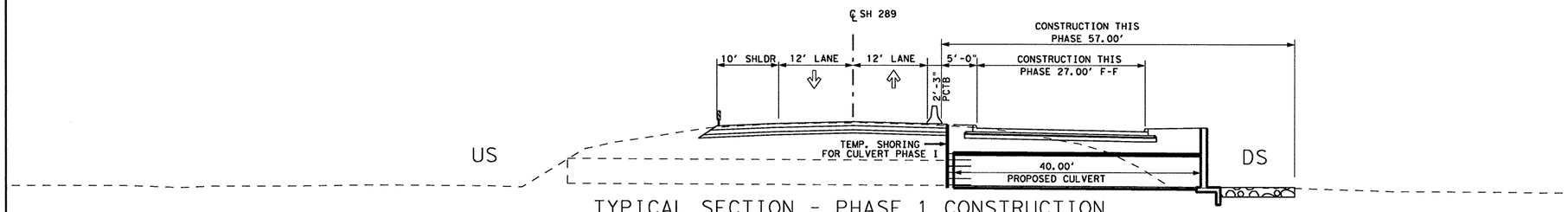

TYPICAL SECTION - PHASE 1 CONSTRUCTION
BUILD DOWNSTREAM SIDE

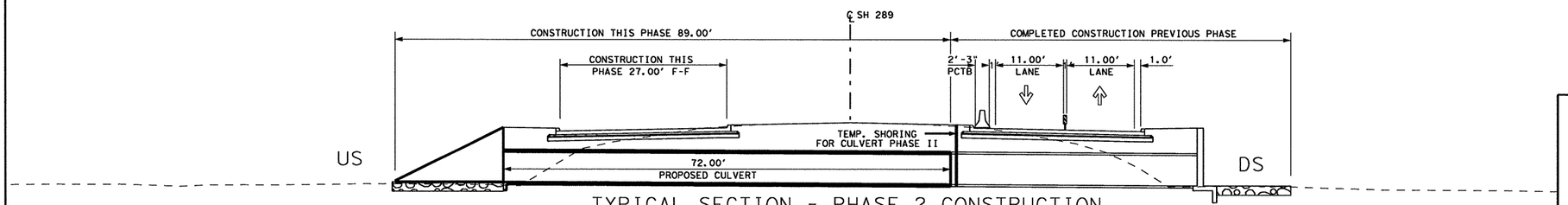

TYPICAL SECTION - PHASE 2 CONSTRUCTION
BUILD UPSTREAM SIDE

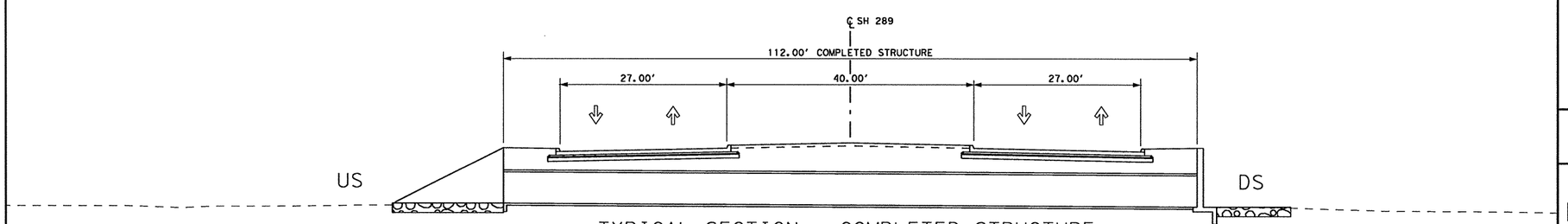

TYPICAL SECTION - COMPLETED STRUCTURE
STATION 391+53.32

STATE OF TEXAS
NICHOLAS VON SPENCER
93702
LICENSED
PROFESSIONAL ENGINEER

Signature of Registrant P.E. & Date 4-11-11

Texas Department of Transportation
© 2011

SH 289
DOE BRANCH TRIBUTARY H
PHASE CONSTRUCTION

SCALE:1"=20' SHEET 1 OF 1

DESIGN	FED. RD. DIV. NO.	STATE PROJECT NO.		HIGHWAY NO.
AMW	6	(SEE TITLE SHEET)		SH 289
GRAPHICS AMW	STATE	DISTRICT	COUNTY	SHEET NO.
CHECK NVS	TEXAS	DALLAS	COLLIN	244
CHECK NVS	CONTROL 0091	SECTION 04	JOB 055	

4/11/2011 1:17:13 PM

T:\DALDGN*A\SH 289 Celina\THE PLANS\Culverts\Plan A Protecting Ends of Bridge Class Culverts\Culvert #5 FEMA Doe Branch H.dgn

R-201104-01

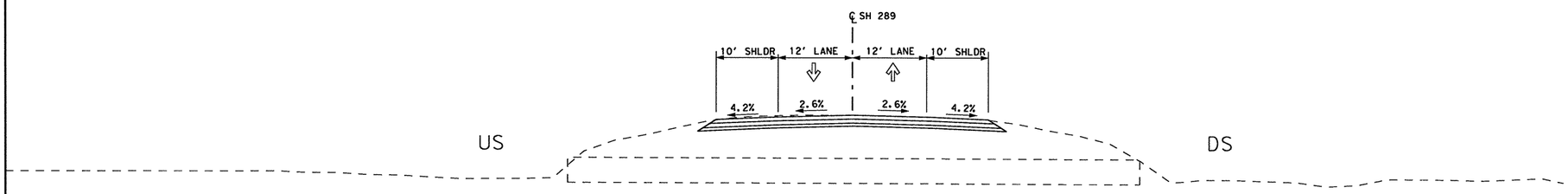

TYPICAL SECTION - EXISTING STRUCTURE

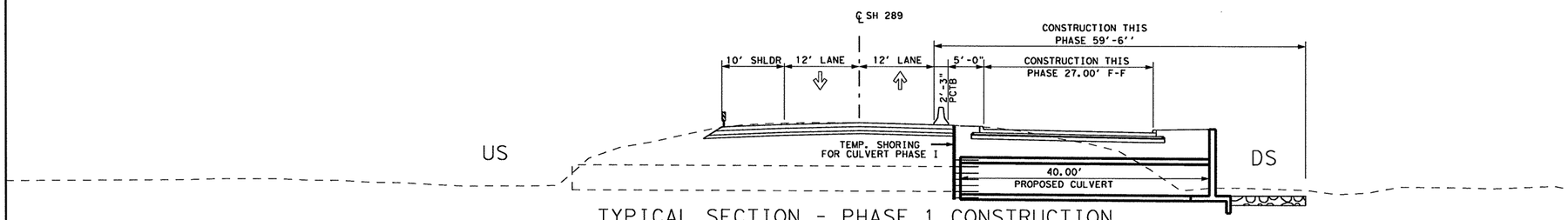

TYPICAL SECTION - PHASE 1 CONSTRUCTION
BUILD DOWNSTREAM SIDE

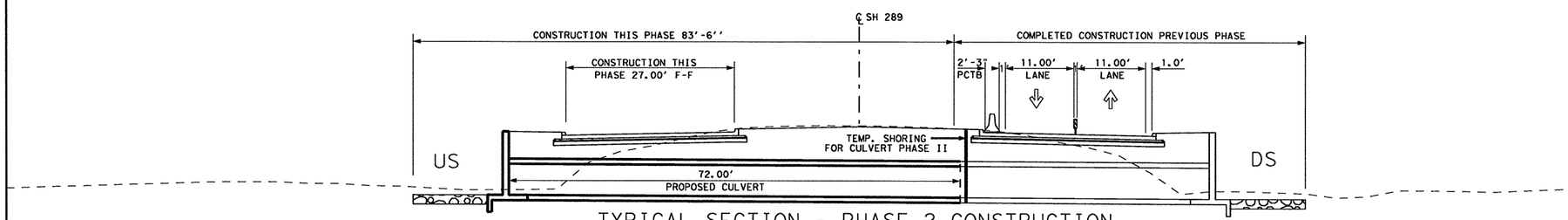

TYPICAL SECTION - PHASE 2 CONSTRUCTION
BUILD UPSTREAM SIDE

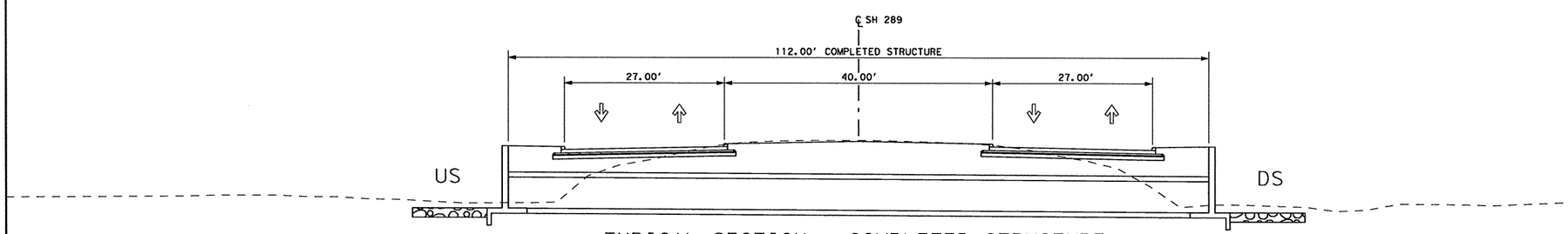

TYPICAL SECTION - COMPLETED STRUCTURE
STATION 433+88.54

STATE OF TEXAS
NICHOLAS VON SPENCER
93702
LICENSED
PROFESSIONAL ENGINEER

Nicholas V Spencer, P.E. 4-11-11
Signature of Registrant & Date

Texas Department of Transportation
© 2011

SH 289
DOE BRANCH TRIBUTARY G
PHASE CONSTRUCTION

SCALE:1"=20' SHEET 1 OF 1

DESIGN	FED. RD. DIV. NO.	STATE PROJECT NO.		HIGHWAY NO.
AMW	6	(SEE TITLE SHEET)		SH 289
GRAPHICS	STATE	DISTRICT	COUNTY	SHEET NO.
AMW	TEXAS	DALLAS	COLLIN	245
CHECK	CONTROL	SECTION	JOB	
NVS	0091	04	055	
CHECK				
NVS				

T:\DALDGN*A\SH 289 Ceiling\THE PLANS\Culverts\PLan A Protecting Ends of Bridge Class Culverts\Culvert #7 FEMA Doe Branch G.dgn

4/11/2011 1:15:49 PM

R-201104-01

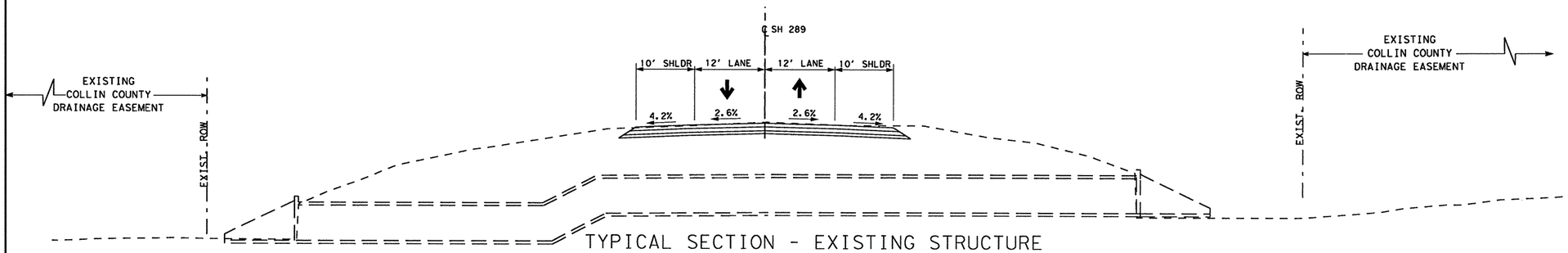

TYPICAL SECTION - EXISTING STRUCTURE

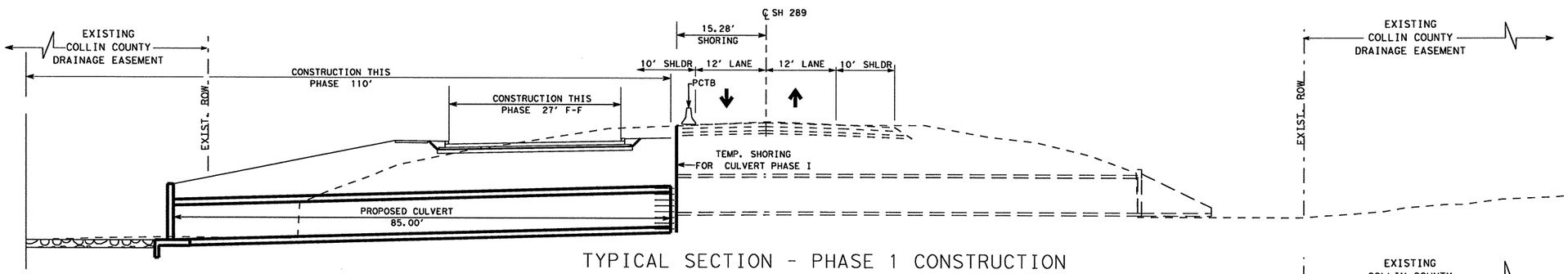

TYPICAL SECTION - PHASE 1 CONSTRUCTION
BUILD DOWNSTREAM SIDE

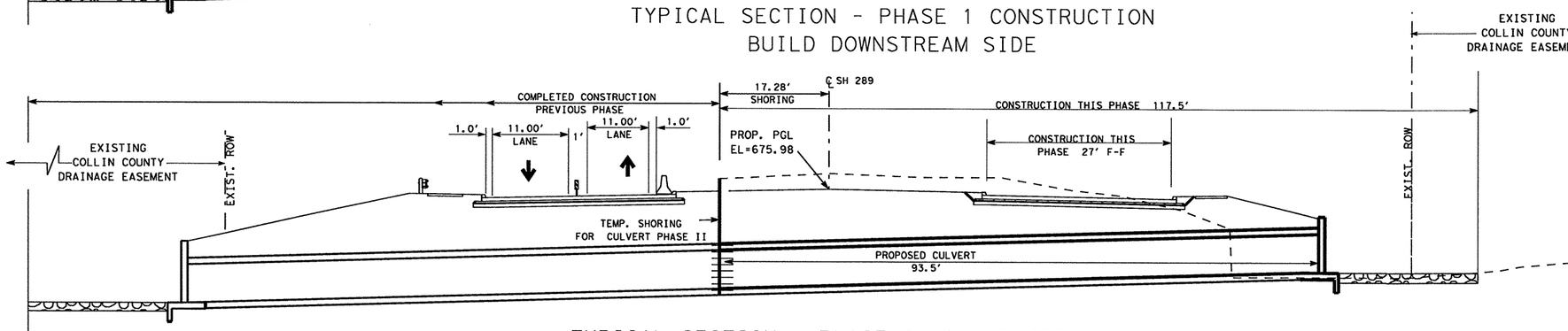

TYPICAL SECTION - PHASE 2 CONSTRUCTION
BUILD UPSTREAM SIDE

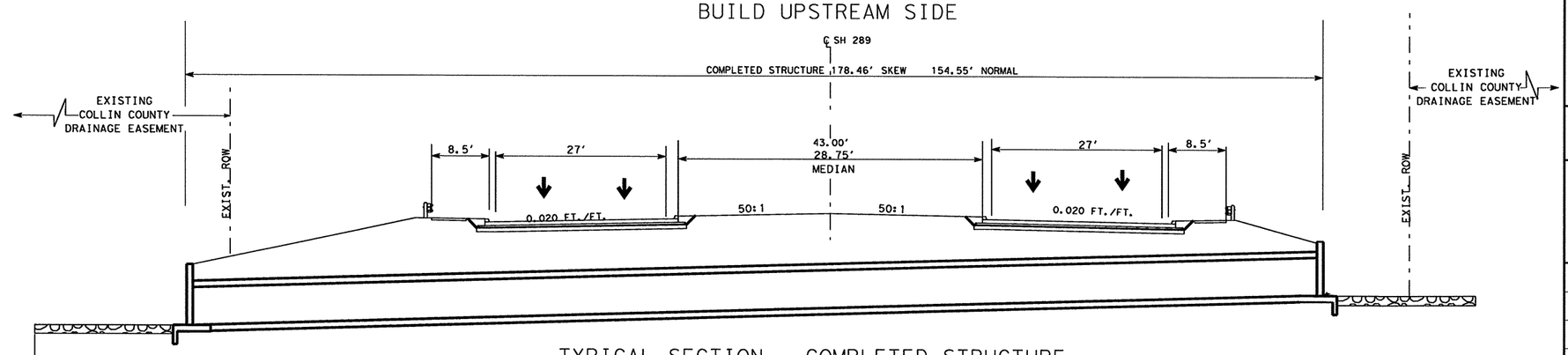

TYPICAL SECTION - COMPLETED STRUCTURE

STATE OF TEXAS
NICHOLAS VON SPENCER
93702
LICENSED
PROFESSIONAL ENGINEER

Nicholas V Spencer, P.E. 4-11-11
Signature of Registrant & Date

Texas Department of Transportation
© 2011

DOE BRANCH UNNAMED TRIBUTARY #2 PHASE CONSTRUCTION

NO SCALE — SHEET 1 OF 1

DESIGN	FED. RD. DIV. NO.	STATE PROJECT NO.		HIGHWAY NO.
NVS	6	(SEE TITLE SHEET)		SH 289
GRAPHICS NVS	STATE	DISTRICT	COUNTY	SHEET NO.
CHECK NVS	TEXAS	DALLAS	COLLIN	246
CHECK	CONTROL	SECTION	JOB	
	0091	04	055	

T:\DALDGN*A\SH 289 Collin\THE PLANS\Culverts\Plan A Protecting Ends of Bridge Class Culverts\Culvert #10 FEMA Unnamed Trib.dgn

4/11/2011 1:43:21 PM

R-201104-01

DOE BRANCH TRIBUTARY H
CULVERT #5

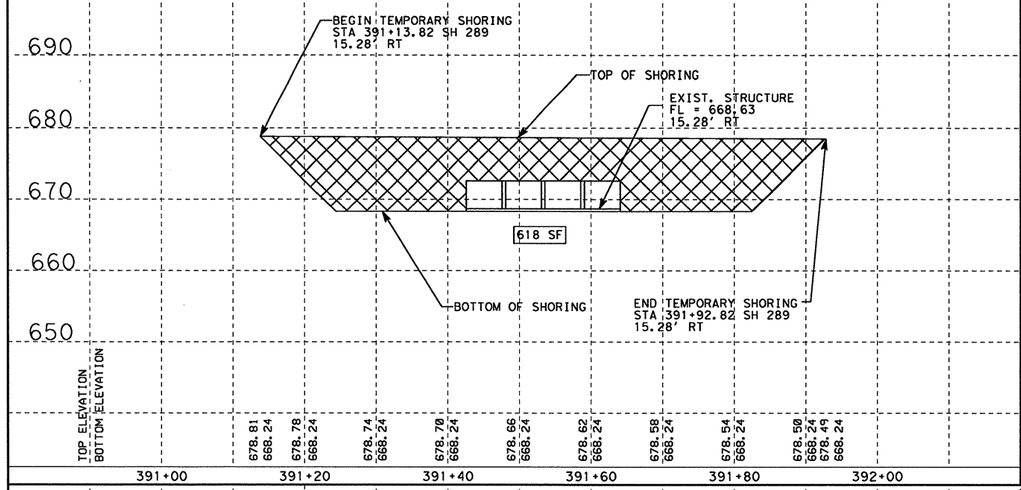

DOE BRANCH TRIBUTARY G
CULVERT #7

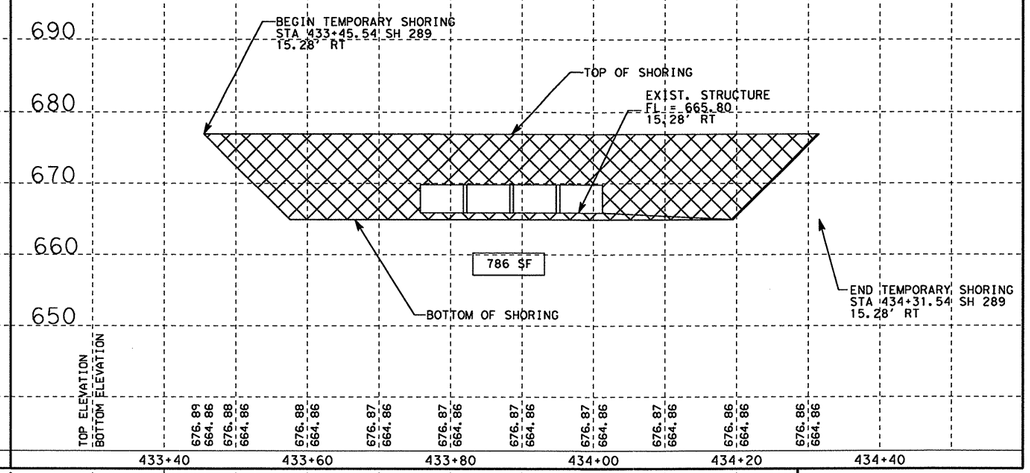

DOE BRANCH
CULVERT #1

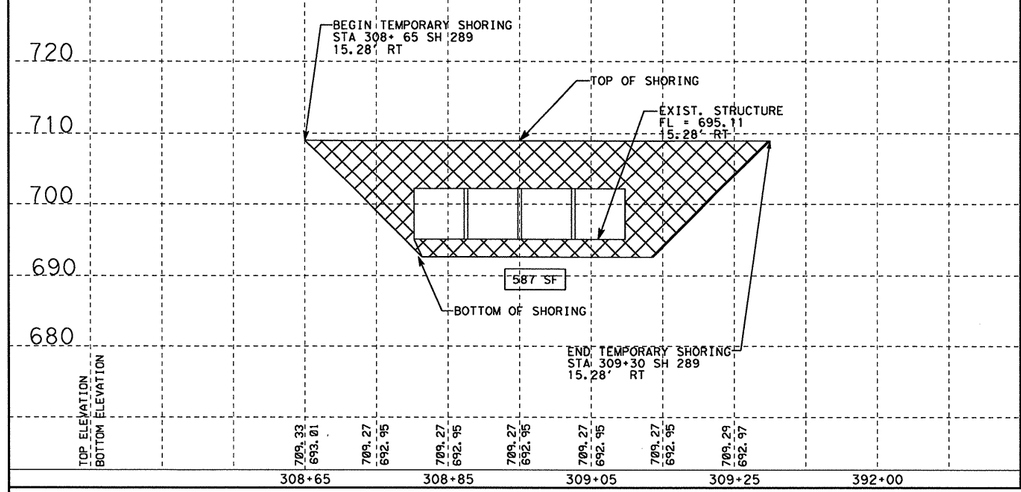

DOE BRANCH UNNAMED TRIBUTARY 2
CULVERT #10

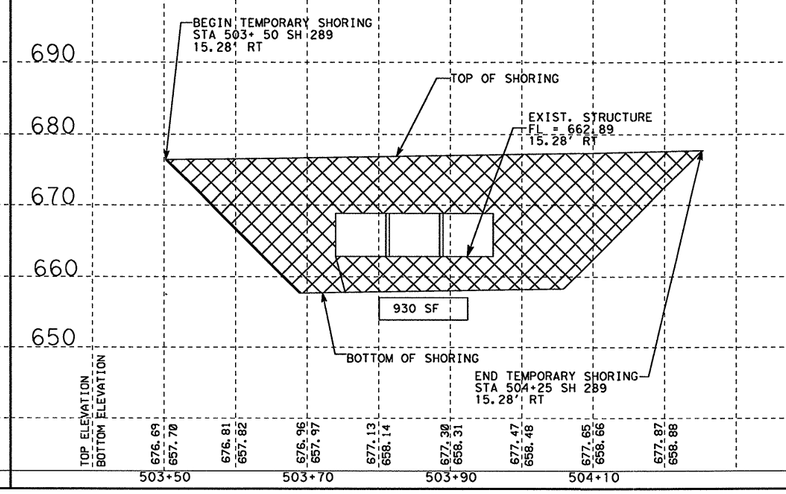

NOTES:

1. SEE PHASE I TRAFFIC CONTROL PLAN FOR SHORING LOCATION.

2. QUANTITY INDICATED WILL BE USED FOR PHASE I CONSTRUCTION.

STATE OF TEXAS
NICHOLAS VON SPENCER
93702
LICENSED PROFESSIONAL ENGINEER

Signature of Registrant & Date, P.E. 5-25-11

Texas Department of Transportation
© 2011

TCP PHASE I SH 289 TEMPORARY SHORING DETAIL

SCALE:1"=20'

SHEET 1 OF 2

DESIGN	FED. RD. DIV. NO.	STATE PROJECT NO.		HIGHWAY NO.
AMW	6	(SEE TITLE SHEET)		SH 289
GRAPHICS AMW	STATE	DISTRICT	COUNTY	SHEET NO.
CHECK NVS	TEXAS	DALLAS	COLLIN	247
CHECK NVS	CONTROL 0091	SECTION 04	JOB 055	

T:\DALDGN*A\SH 289 Celina\THE PLANS\Culverts\Temp Shoring Detail.dgn

5/24/2011 1:43:57 PM

R-201104-01

CULVERT #2
CL STA 339+94.24

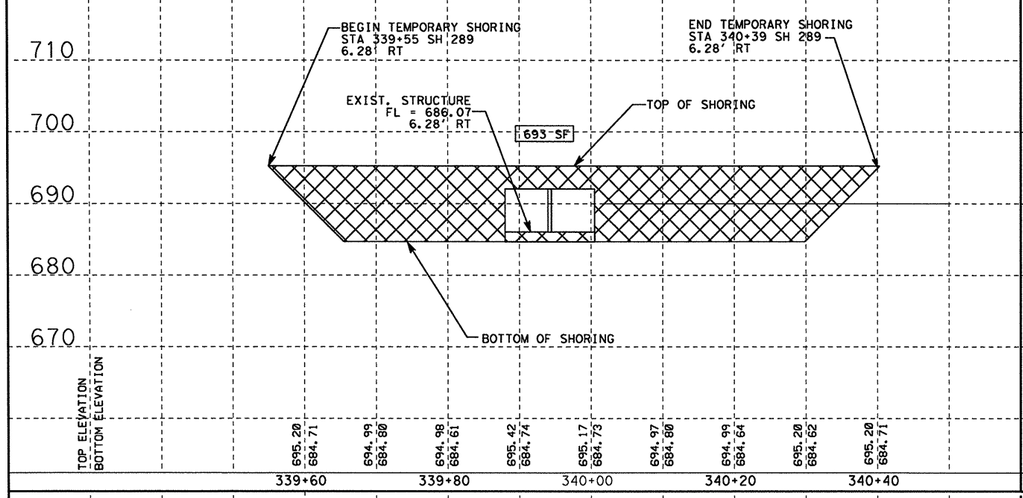

CULVERT #6
CL STA 401+71.57

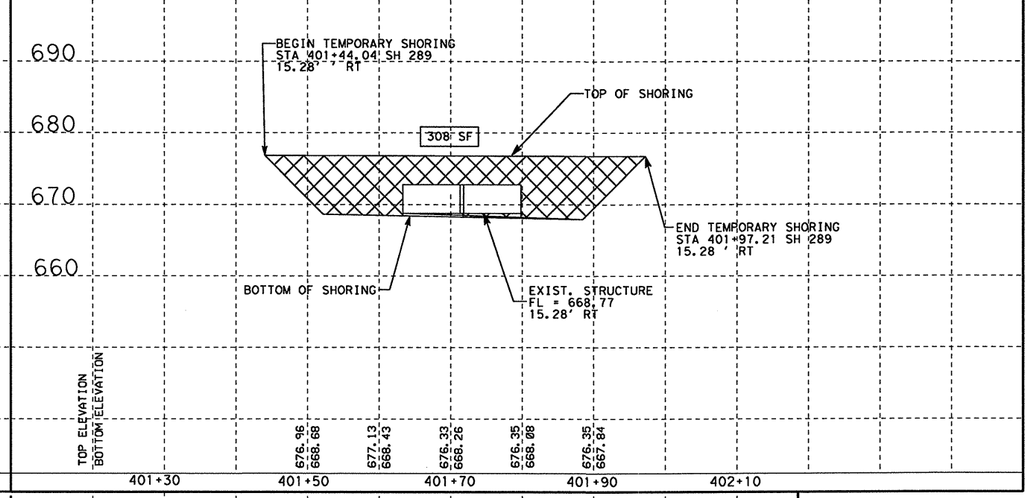

CULVERT #8
CL STA 471+01.33

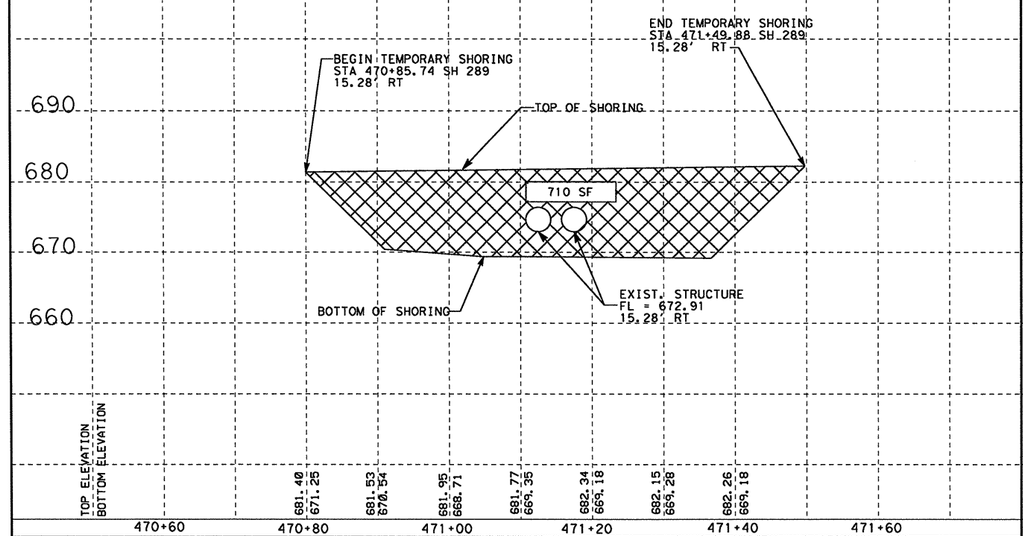

CULVERT #9
CL STA 471+01.33

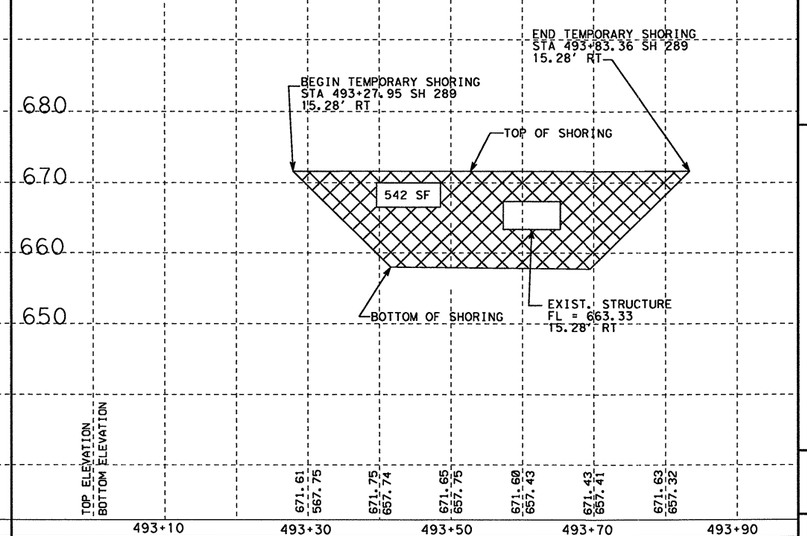

NOTES:

1. SEE PHASE I TRAFFIC CONTROL PLAN FOR SHORING LOCATION.

2. QUANTITY INDICATED WILL BE USED FOR PHASE I CONSTRUCTION.

STATE OF TEXAS
NICHOLAS VON SPENCER
93702
LICENSED PROFESSIONAL ENGINEER

Signature of Registrant , P.E. & Date 5-25-11

Texas Department of Transportation
© 2011

TCP PHASE I SH 289 TEMPORARY SHORING DETAIL

SCALE:1"=20' SHEET 2 OF 2

DESIGN	FED. RD. DIV. NO.	STATE PROJECT NO.		HIGHWAY NO.
AMW	6	(SEE TITLE SHEET)		SH 289
GRAPHICS	STATE	DISTRICT	COUNTY	SHEET NO.
AMW	TEXAS	DALLAS	COLLIN	248
CHECK	CONTROL	SECTION	JOB	
NVS	0091	04	055	
CHECK				
NVS				

5/24/2011 2:32:46 PM

T:\DALDGN*A\SH 289 Ceiling\THE PLANS\Culverts\Temp Shoring Detail.dgn

R-201104-01

DOE BRANCH TRIBUTARY H
CULVERT #5

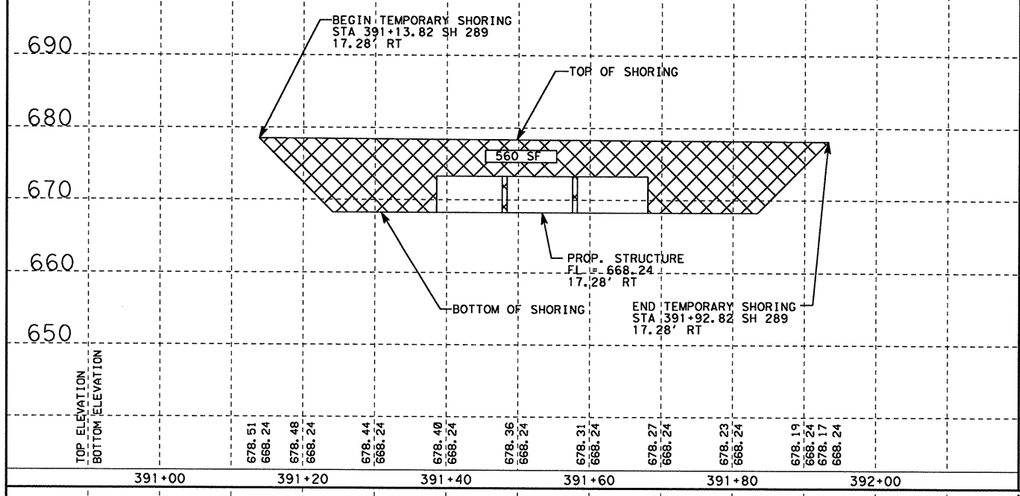

DOE BRANCH TRIBUTARY G
CULVERT #7

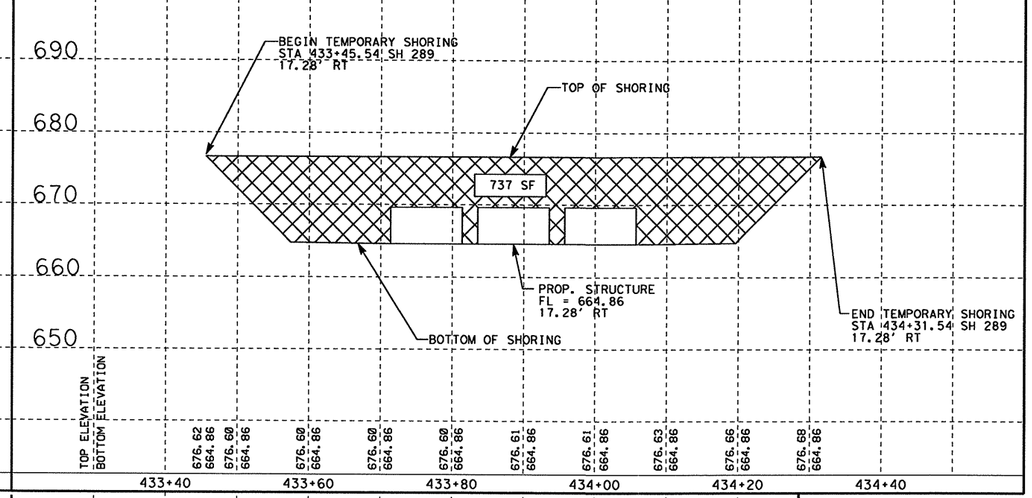

DOE BRANCH
CULVERT #1

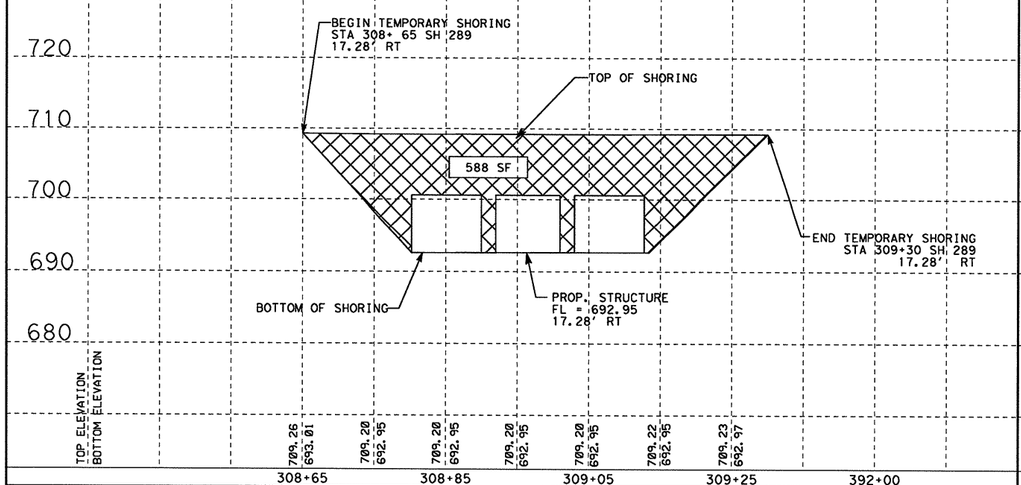

DOE BRANCH UNNAMED TRIBUTARY 2
CULVERT #10

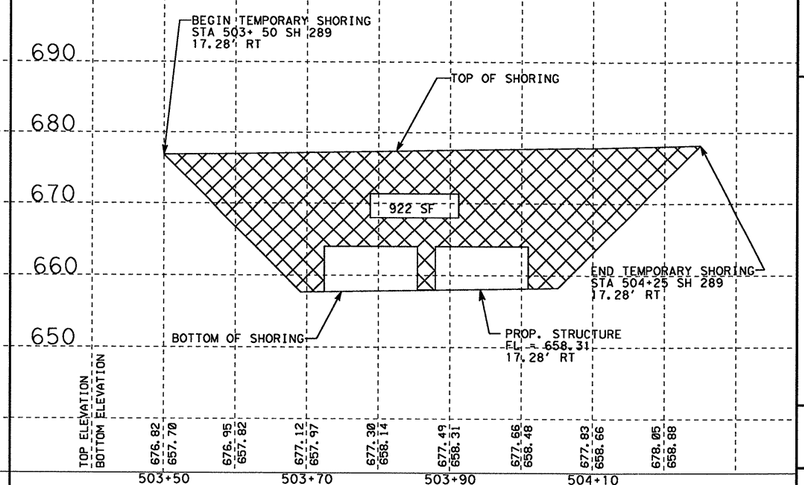

NOTES:

1. SEE PHASE II TRAFFIC CONTROL PLAN FOR SHORING LOCATION.

2. QUANTITY INDICATED WILL BE USED FOR PHASE II CONSTRUCTION.

STATE OF TEXAS
NICHOLAS VON SPENCER
93702
LICENSED
PROFESSIONAL ENGINEER

Signature of Registrant & Date, P.E. 5-25-11

Texas Department of Transportation
© 2011

TCP PHASE II SH 289 TEMPORARY SHORING DETAIL

SCALE: 1"=20'

SHEET 1 OF 2

DESIGN	FED. RD. DIV. NO.	STATE PROJECT NO.		HIGHWAY NO.
AMW	6	(SEE TITLE SHEET)		SH 289
GRAPHICS	STATE	DISTRICT	COUNTY	SHEET NO.
AMW	TEXAS	DALLAS	COLLIN	249
CHECK	CONTROL	SECTION	JOB	
NVS	0091	04	055	
CHECK				
NVS				

T:\DALDGN*A\SH 289 Collno\THE PLANS\Culverts\Ashton*Temp Shoring Detail.dgn

5/24/2011 1:44:50 PM

R-201104-01

CULVERT #2
CL STA 339+94.24

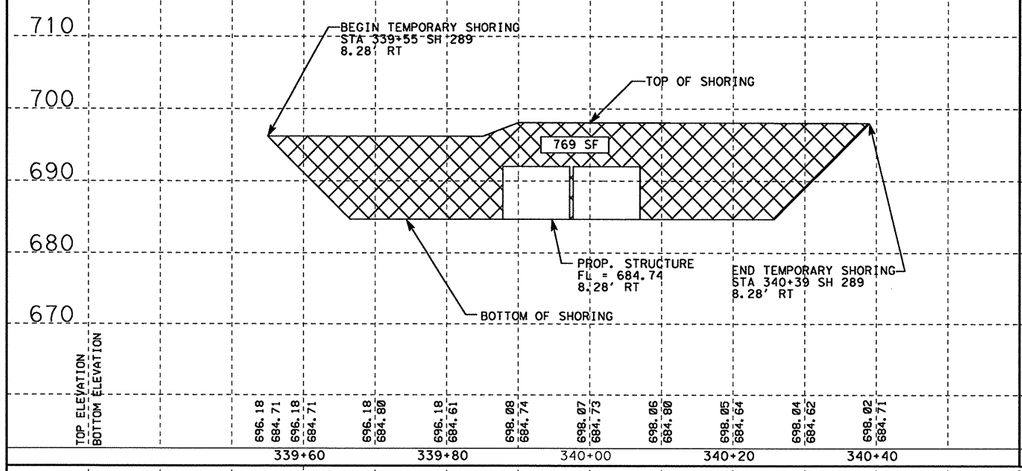

CULVERT #6
CL STA 401+71.57

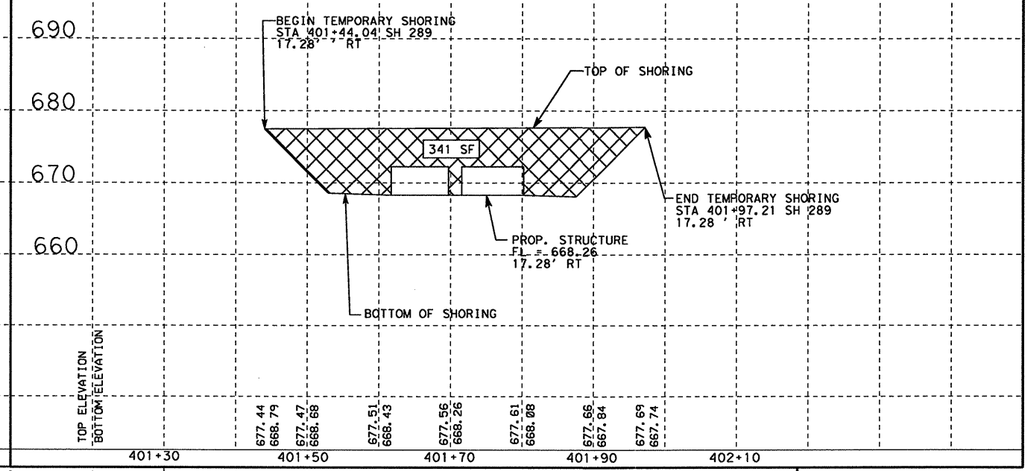

CULVERT #8
CL STA 471+01.33

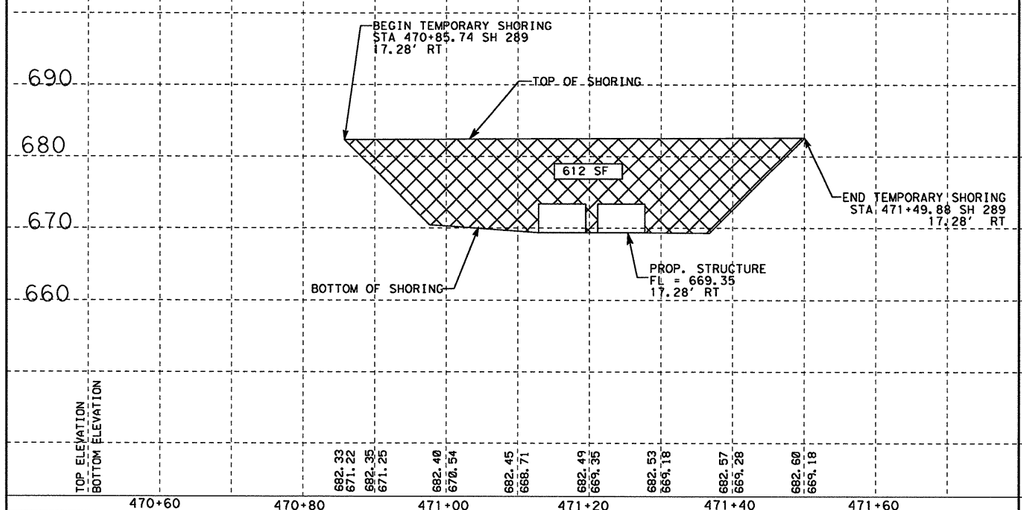

CULVERT #9
CL STA 471+01.33

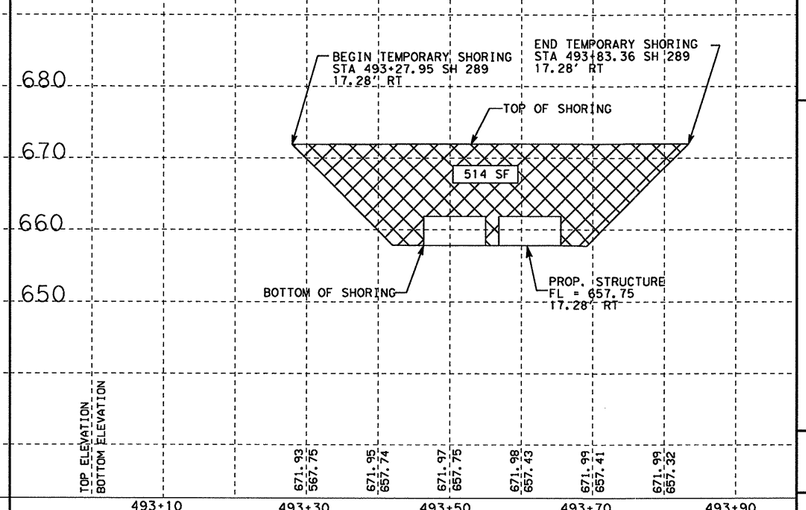

NOTES:

1. SEE PHASE II TRAFFIC CONTROL PLAN FOR SHORING LOCATION.

2. QUANTITY INDICATED WILL BE USED FOR PHASE II CONSTRUCTION.

STATE OF TEXAS
NICHOLAS VON SPENCER
93702
LICENSED PROFESSIONAL ENGINEER

Signature of Registrant , P.E. & Date 5-25-11

Texas Department of Transportation
© 2011

TCP PHASE II SH 289 TEMPORARY SHORING DETAIL

SCALE:1"=20' SHEET 2 OF 2

DESIGN	FED. RD. DIV. NO.	STATE PROJECT NO.		HIGHWAY NO.
AMW	6	(SEE TITLE SHEET)		SH 289
GRAPHICS AMW	STATE	DISTRICT	COUNTY	SHEET NO.
CHECK NVS	TEXAS	DALLAS	COLLIN	250
CHECK NVS	CONTROL 0091	SECTION 04	JOB 055	

T:\DALDGN*A\SH 289 Celina\THE PLANS\Culverts\Ashton*Temp Shoring Detail.dgn

5/24/2011 1:45:07 PM

R-201104-01

5/15/2011 7:38:51 AM

T:\DALDGN*A\SH 289 Celina\THE PLANS\Drainage Maps\SH 289 STA 303+05 TO 519+00.dgn

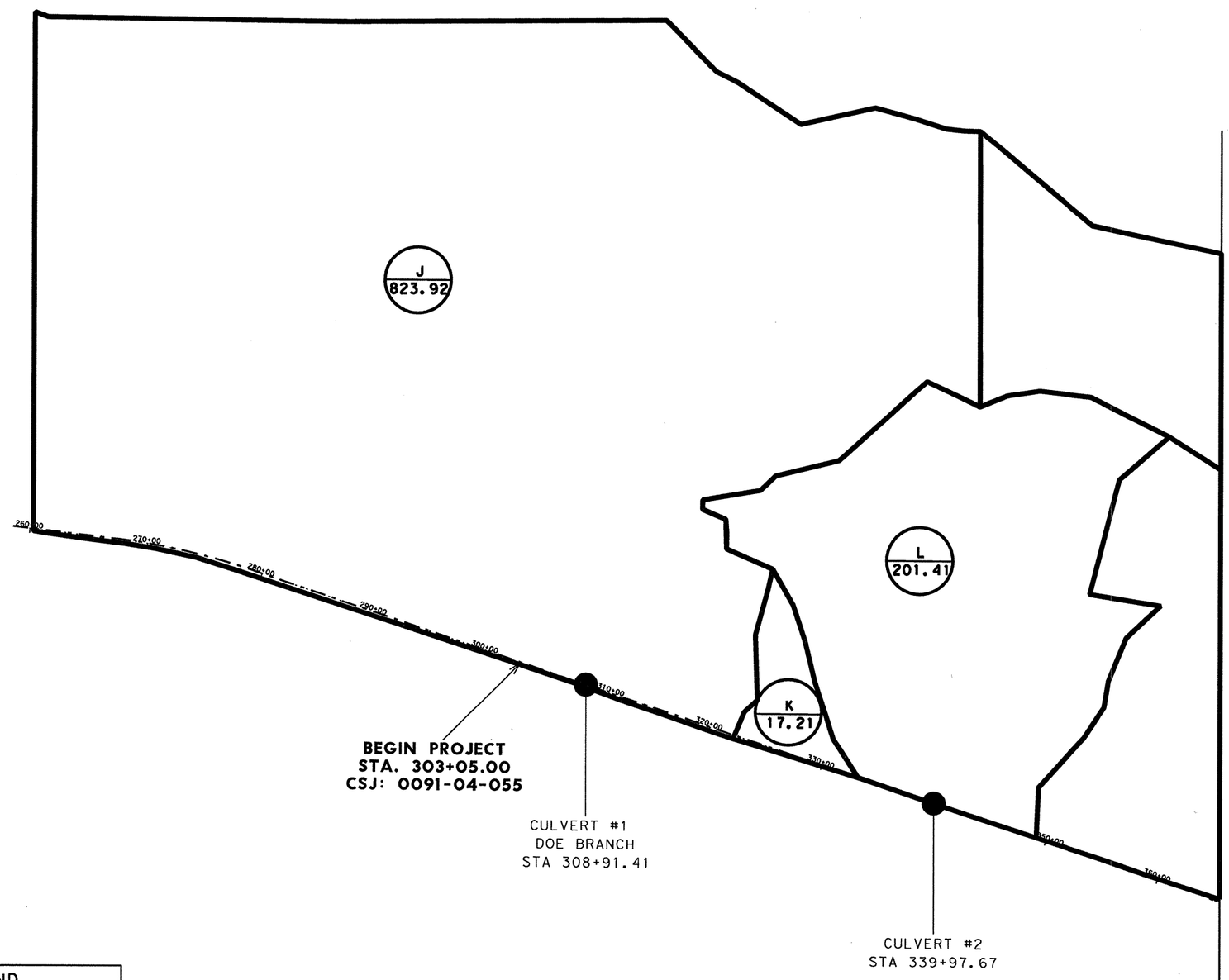

LEGEND

- BOUNDRY AREA
- AN / DA — AREA NAME / DRAINAGE AREA (ACRE)
- CULVERT LOCATION

STATE OF TEXAS
NICHOLAS VON SPENCER
93702
LICENSED
PROFESSIONAL ENGINEER

Nicholas V Spencer, P.E. 5-25-11
Signature of Registrant & Date

Texas Department of Transportation
© 2011

SH 289
DRAINAGE AREA MAP
(STA 303+05.00 TO STA 365+49.58)

SCALE: 1"=1000'

SHEET 1 OF 4

DESIGN	FED. RD. DIV. NO.	STATE PROJECT NO.		HIGHWAY NO.
MK/HJL	6	SEE TITLE SHEET		SH 289
GRAPHICS	STATE	DISTRICT	COUNTY	SHEET NO.
MK/HJL	TEXAS	DALLAS	COLLIN	251
CHECK	CONTROL	SECTION	JOB	
NVS	0091	04	055	
CHECK				
NVS				

R-201104-01

5/15/2011 7:41:21 AM

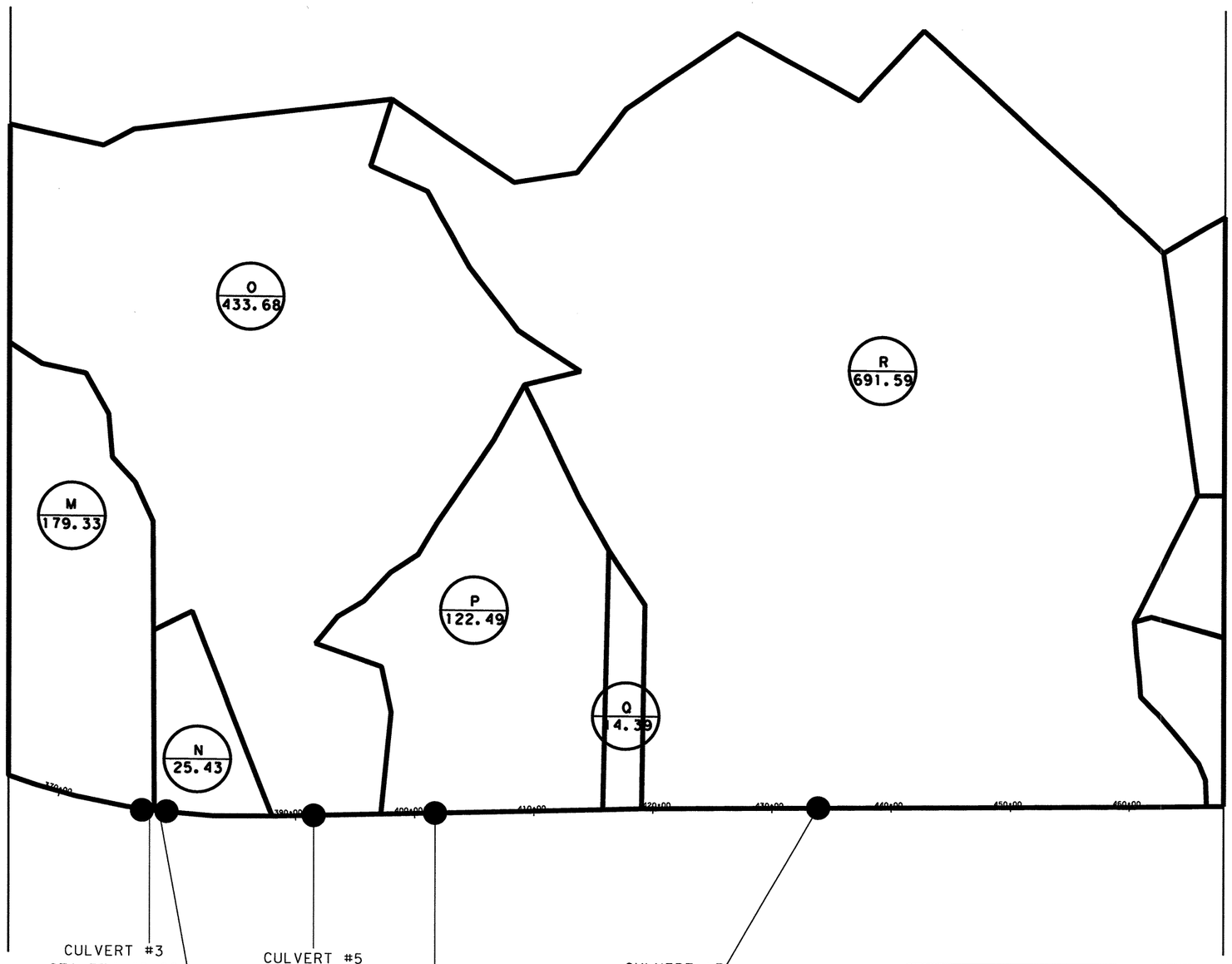

LEGEND

- BOUNDRY AREA
- AN / DA — AREA NAME / DRAINAGE AREA (ACRE)
- CULVERT LOCATION

STATE OF TEXAS
NICHOLAS VON SPENCER
93702
LICENSED
PROFESSIONAL ENGINEER

Signature of Registrant & Date, P.E. 5-25-11

Texas Department of Transportation
© 2011

SH 289
DRAINAGE AREA MAP
(STA 365+49.58 TO STA 467+91.02)

SCALE: 1"=1000' SHEET 2 OF 4

DESIGN	FED. RD. DIV. NO.	STATE PROJECT NO.		HIGHWAY NO.
MK/HJL	6	SEE TITLE SHEET		SH 289
GRAPHICS	STATE	DISTRICT	COUNTY	SHEET NO.
MK/HJL	TEXAS	DALLAS	COLLIN	252
CHECK	CONTROL	SECTION	JOB	
NVS	0091	04	055	
CHECK NVS				

\DALDGN*A\SH 289 Ceiling\THE PLANS\Drainage Maps\SH 289 STA 303+05 TO 519+00.dgn

5/15/2011 7:42:53 AM

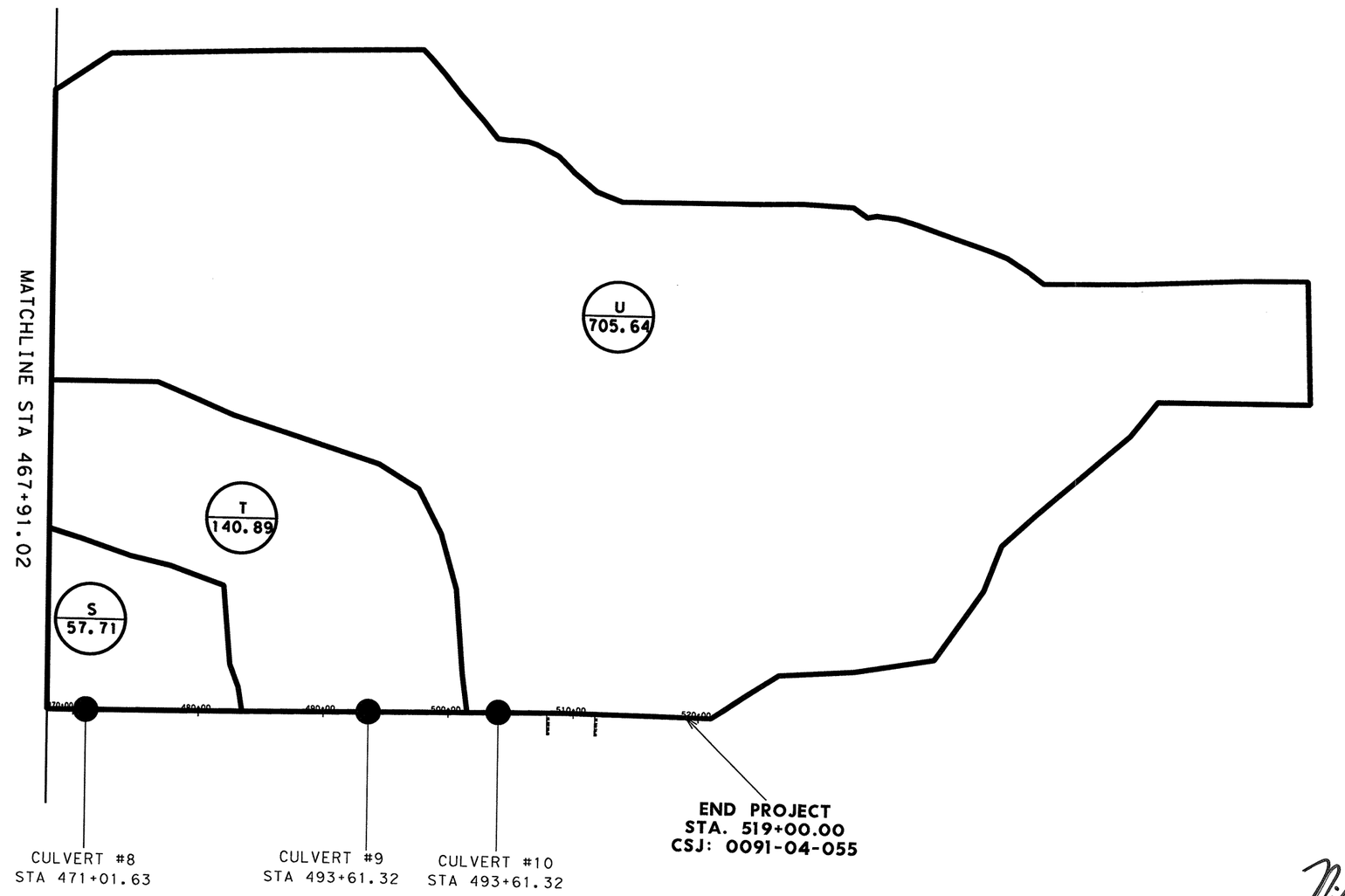

LEGEND

- BOUNDRY AREA
- AN / DA — AREA NAME / DRAINAGE AREA (ACRE)
- CULVERT LOCATION

STATE OF TEXAS
NICHOLAS VON SPENCER
93702
LICENSED
PROFESSIONAL ENGINEER

Nicholas V Spencer, P.E. 5-25-11
Signature of Registrant & Date

Texas Department of Transportation
© 2011

SH 289
DRAINAGE AREA MAP
(STA 467+91.02 TO STA 519+00.00)

SCALE: 1"=1000' SHEET 3 OF 4

DESIGN	FED. RD. DIV. NO.	STATE PROJECT NO.		HIGHWAY NO.
MK/HJL	6	SEE TITLE SHEET		SH 289
GRAPHICS	STATE	DISTRICT	COUNTY	SHEET NO.
MK/HJL	TEXAS	DALLAS	COLLIN	253
CHECK	CONTROL	SECTION	JOB	
NVS	0091	04	055	
CHECK NVS				

\DALDGN*A\SH 289 Celina\THE PLANS\Drainage Maps\SH 289 STA 303+05 TO 519+00.dgn

R-201104-01

5/15/2011 7:44:31 AM

RUN OFF COMPUTATION AND DISCHARGES BASED ON RATIONAL METHOD

AREA NAME	CULVERT NAME	STATION	DRAINAGE AREA (ACRE)	DESCRIPTION OF CULVERT	RATIONAL METHOD Tc (MIN)	C	DISCHARGES Q_{25} (CFS)	Q_{100} (CFS)
K			17.21	(INCORPORATED INTO NCC STORM SEWER NETWORK)				
M	# 3	377+70.00	179.33	2~8'X5'X171' MBC	38	0.7	577.40	715.50
N	# 4	378+51.00	25.43	1~6'X3'X158' MBC	61	0.7	61.00	75.00
Q			14.39	(INCORPORATED INTO NH STORM SEWER NETWORK)				
S	# 8	471+01.63	57.71	2~6'X4'X212' MBC	26	0.8	267.80	332.40

RUN OFF COMPUTATION AND DISCHARGES BASED ON TR-55 METHOD

AREA NAME	CULVERT NAME	STATION	DESCRIPTION OF CULVERT	SUBAREAS (ACRE)	DRAINAGE AREA (ACRE)	TR-55 CN	Tc (HRS)	DISCHARGES Q_{25} (CFS)	Q_{100} (CFS)
J	#1 DOE BRANCH	308+91.41	3~ 9' x 8' x 129' MBC		824.00			1402.00	1879.00
				UPPER NORTHWEST	156.66	87	0.658		
				UPPER NORTHWEST	149.42	83	0.426		
				MIDDLE REGION	84.66	84	0.387		
				EAST REGION	136.36	84	0.556		
				WEST REGION	104.20	87	0.445		
				CENTER REGION	43.02	83	0.278		
				SOUTH CENTER REGION	23.11	87	0.123		
				SOUTH CENTER 2 REGION	11.99	81	0.100		
				LOWER SOUTH REGION	114.79	92	0.159		
L	# 2	339+97.67			207.71			986.37	1273.18
				SUBAREA A	49.98	89	0.428		
				SUBAREA B	55.94	89	0.233		
				SUBAREA C	95.79	90	0.276		
O	#5 DOE BRANCH TRIBUTARY H	391+53.32	3~8' x 5' x 112' MBC		434.00			1356.00	1801.00
				UPPER NORTH	139.00	84	0.848		
				EASTERN REGION	73.00	84	0.452		
				SOUTHEASTERN REGION	32.00	85	0.374		
				NORTH REGION	78.00	84	0.550		
				SOUTH REGION	57.00	84	0.468		
				WEST REGION	55.00	86	0.472		
P	# 6	401+71.57	3~8' x 4' x 112' MBC		122.49			539.87	702.34
				EAST REGION	28.52	84	0.325		
				SOUTH REGION	46.54	90	0.417		
				NORTH REGION	47.43	87	0.366		
R	#7 DOE BRANCH TRIBUTARY G	433+88.54	3~10' x 5' x 112' MBC		691.59			1841.07	2423.38
				UPPER NORTHEAST 1	47.00	84	0.461		
				UPPER NORTHEAST 2	24.00	85	0.261		
				EAST REGION	112.00	84	0.584		
				SOUTH EAST	128.00	85	0.663		
				SOUTH DEVELOPMENT 1	85.00	88	0.747		
				NORTH REGION	178.00	86	0.727		
				SOUTH DEVELOPMENT 2	118.00	91	0.408		
T	# 9	493+61.32	3~8' x 4' x 112' MBC		140.89			597.00	783.00
				NORTH REGION	35.00	86	0.387		
				MIDDLE REGION	71.10	86	0.313		
				WEST REGION	34.79	90	0.138		
U	#10 DOE BRANCH UNNAMED TRIB 2	504+01.38	3~ 7' x 6' x 178.5' MBC		705.64			1864.00	2465.00
				NORTHWEST	206	86	0.544		
				UPPER NORTH	83	84	0.426		
				MIDDLE REGION	135	86	0.517		
				EAST	249	87	0.597		
				SOUTH	33	87	0.423		

STATE OF TEXAS
NICHOLAS VON SPENCER
93702
LICENSED
PROFESSIONAL ENGINEER

Nicholas V Spencer, P.E. 5-25-11
Signature of Registrant & Date

Texas Department of Transportation
© 2011

SH 289
DRAINAGE AREA MAP
COMPUTATIONS

SHEET 4 OF 4

DESIGN	FED. RD. DIV. NO.	STATE PROJECT NO.		HIGHWAY NO.
MK/HJL	6	SEE TITLE SHEET		SH 289
GRAPHICS MK/HJL	STATE	DISTRICT	COUNTY	SHEET NO.
CHECK NVS	TEXAS	DALLAS	COLLIN	254
CHECK NVS	CONTROL 0091	SECTION 04	JOB 055	

\DALDGN*A\SH 289 Celina\THE PLANS\Drainage Maps\SH 289 STA 303+05 TO 519+00.dgn

PLAN VIEW

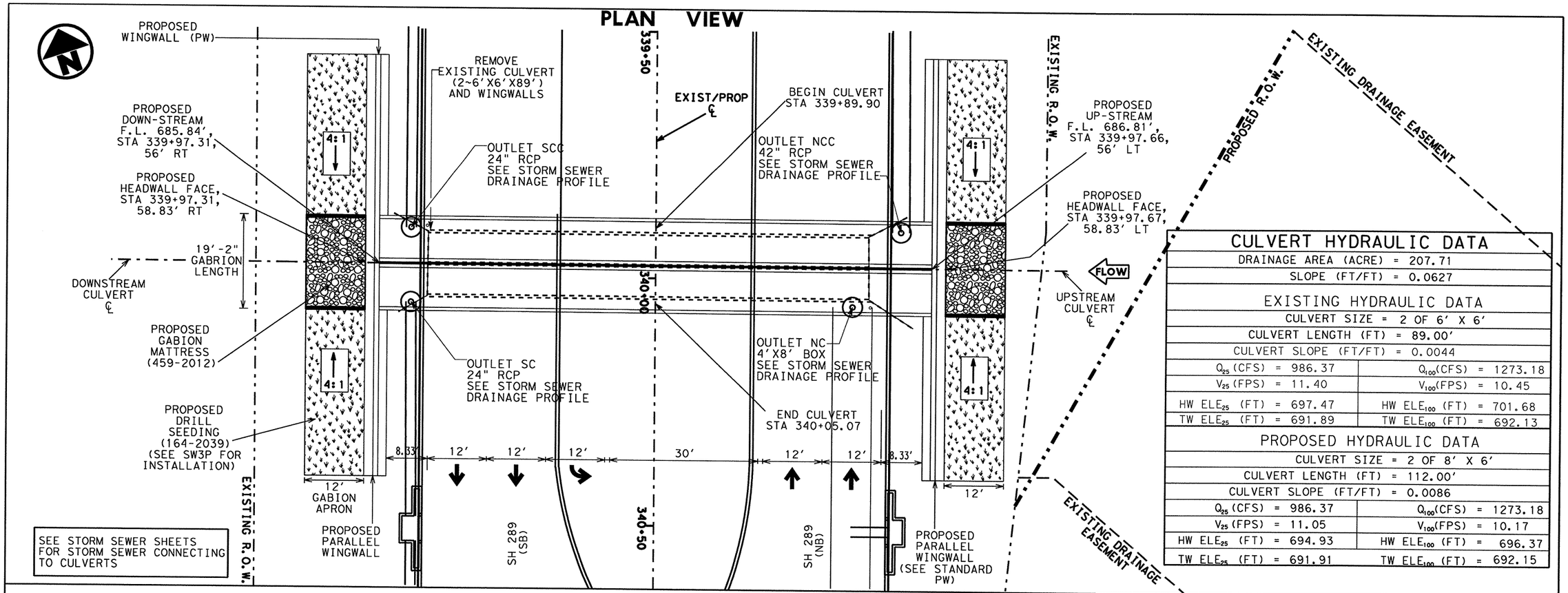

CULVERT HYDRAULIC DATA	
DRAINAGE AREA (ACRE) = 207.71	
SLOPE (FT/FT) = 0.0627	
EXISTING HYDRAULIC DATA	
CULVERT SIZE = 2 OF 6' X 6'	
CULVERT LENGTH (FT) = 89.00'	
CULVERT SLOPE (FT/FT) = 0.0044	
Q_{25} (CFS) = 986.37	Q_{100} (CFS) = 1273.18
V_{25} (FPS) = 11.40	V_{100} (FPS) = 10.45
HW ELE_{25} (FT) = 697.47	HW ELE_{100} (FT) = 701.68
TW ELE_{25} (FT) = 691.89	TW ELE_{100} (FT) = 692.13
PROPOSED HYDRAULIC DATA	
CULVERT SIZE = 2 OF 8' X 6'	
CULVERT LENGTH (FT) = 112.00'	
CULVERT SLOPE (FT/FT) = 0.0086	
Q_{25} (CFS) = 986.37	Q_{100} (CFS) = 1273.18
V_{25} (FPS) = 11.05	V_{100} (FPS) = 10.17
HW ELE_{25} (FT) = 694.93	HW ELE_{100} (FT) = 696.37
TW ELE_{25} (FT) = 691.91	TW ELE_{100} (FT) = 692.15

CULVERT NO. 2 CROSS SECTION

*The 25-year tailwater elevation 691.91 was determined at Culvert #2 outfall by a normal depth computation, and assuming channel bedslope of 0.060.

**The 100-year tailwater elevation 692.15 was determined at Culvert #2 outfall by a normal depth computation, and assuming channel bedslope of 0.060.

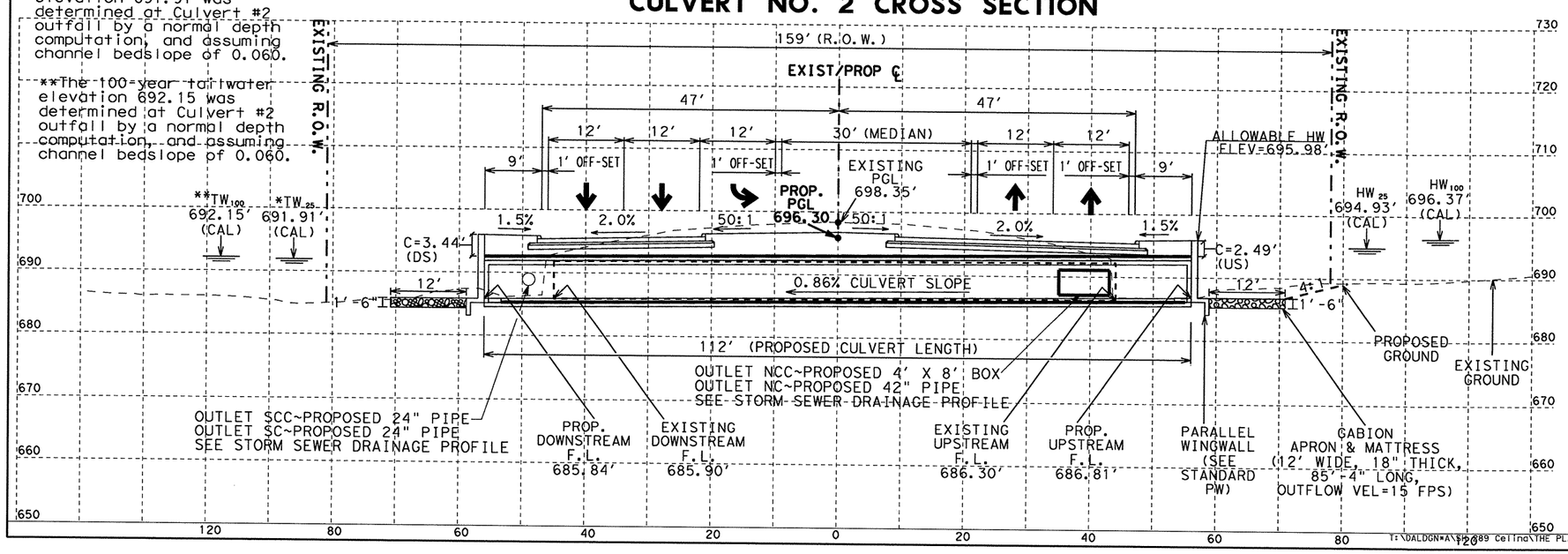

STATE OF TEXAS
NICHOLAS VON SPENCER
93702
LICENSED PROFESSIONAL ENGINEER

Signature of Registrant & Date, P.E. 5-25-11

Texas Department of Transportation
© 2011

CULVERT #2 LAYOUT
STA 339+94.24
2~8'X6'X112' BOX CULVERT

SCALE: 1"=20' SHEET: 1 OF 2

DESIGN HJL	FED. RD. DIV. NO. 6	STATE PROJECT NO. (SEE TITLE SHEET)		HIGHWAY NO. SH 289
GRAPHICS HJL	STATE	DISTRICT	COUNTY	SHEET NO.
CHECK NVS	TEXAS	DALLAS	COLLIN	255
CHECK	CONTROL 0091	SECTION 04	JOB 055	

T:\DALDGN*A\SH289 Ceiling\THE PLANS\Culverts\Culvert #2.dgn 5/15/2011 7:45:12 AM

R-201104-01

CULVERT NO. 2 UP-STREAM END ELEVATION

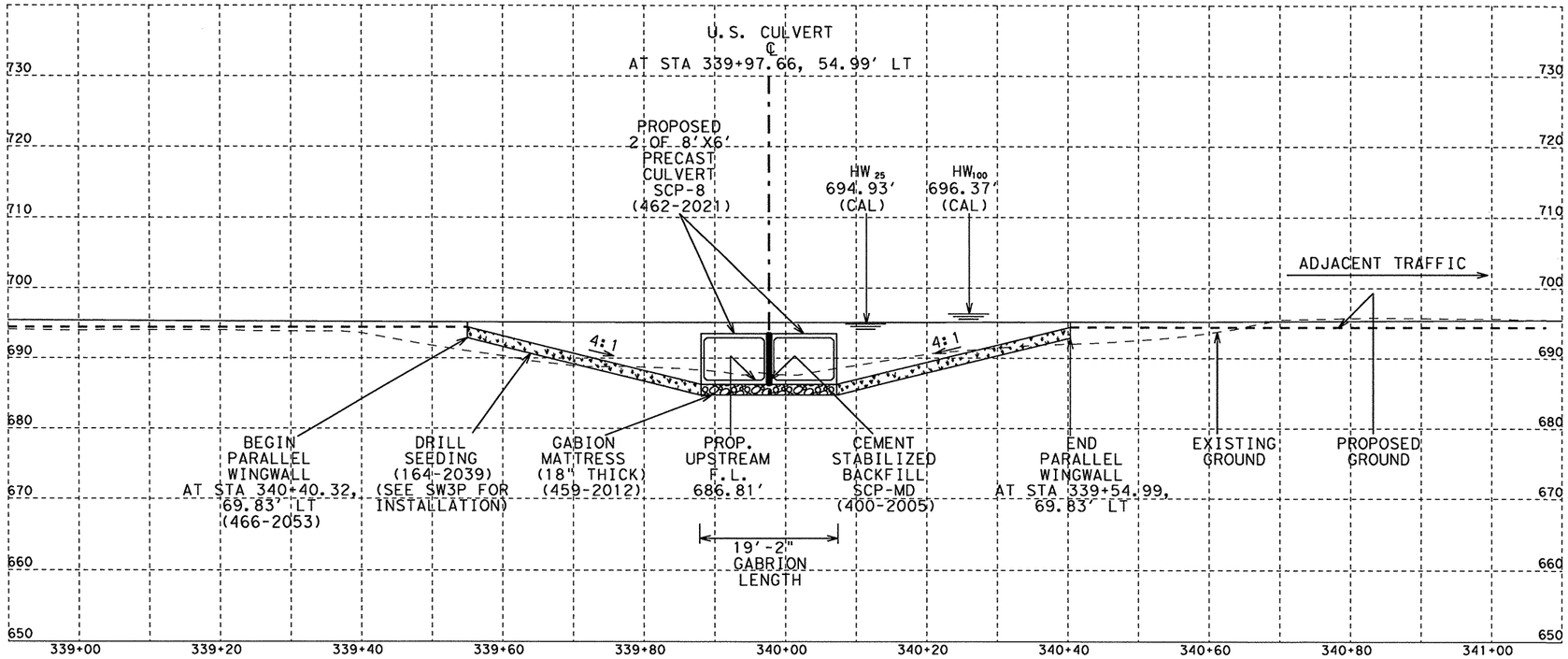

CULVERT NO. 2 DOWN-STREAM END ELEVATION

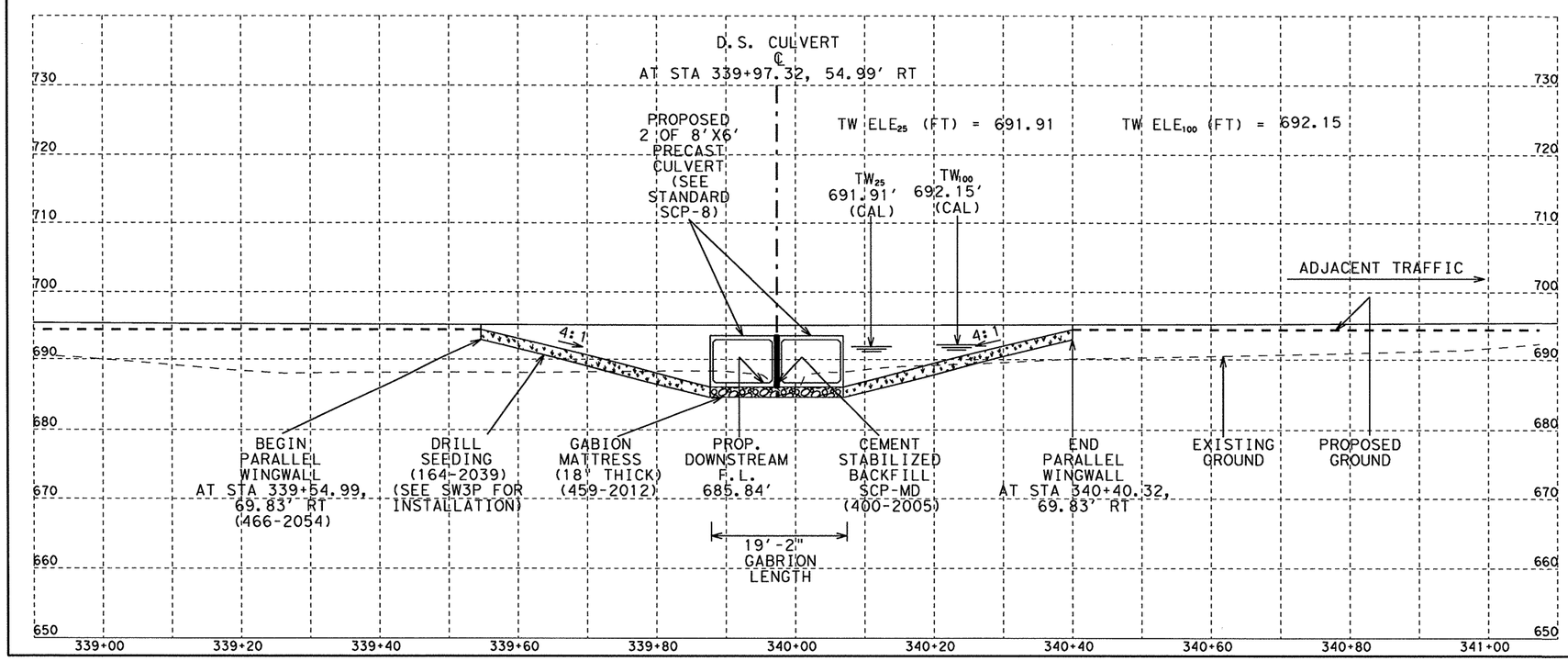

TABLE OF QUANTITIES

BID ITEM	DESCRIPTION	UNIT	QUA.
**	STRUCT EXCAV	CY	218
**	STRUCT EXCAV (BOX)	CY	399
403-2001	TEMPORARY SPL SHORING	SF	1462
459-2012	GABION MATTRESS (GALV)(18 IN)	SY	41
462-2021	CONC BOX CULV (8 FT X 6 FT)	LF	224
466-2054	WINGWALL (PW) (HW=10 FT)	EA	1
466-2055	WINGWALL (PW) (HW=11 FT)	EA	1

** FOR CONTRACTOR'S INFORMATION ONLY

NOTES:

1. HYDROLOGY METHOD: TR-55 (USDA NATURAL RESOURCES CONSERVATION SERVICE, VERSION 1.00.08, DECEMBER 2, 2004).
2. HYDRAULIC METHOD: TXDOT CULVERT HY-8, (FEDERAL HIGHWAY ADMINISTRATION, VERSION 7.0, MARCH 16, 2007).
3. SEE BOX CULVER SUPPLEMENT (BCS) SHEET (TxDOT, VERSION 2000) FOR PARALLEL WING END CONFIGURATION.
4. SEE STANDARD SCP-8 FOR PRECAST BOX CULVERT DETAILS.
5. SEE TRAFFIC CONTROL PLANS (TCP) FOR CONSTRUCTION PHASING.
6. SEE DRAINAGE PLAN AND PROFILE SHEETS FOR STORM SEWER CONNECTING TO CULVERTS.
7. SEE SW3P SHEETS FOR DRILL SEEDING INSTALLATION.

△1 Replaced 6/29/11 JB

STATE OF TEXAS
NICHOLAS VON SPENCER
93702
LICENSED
PROFESSIONAL ENGINEER

Signature of Registrant , P.E. & Date 6-27-11

Texas Department of Transportation
© 2011

CULVERT #2 LAYOUT
STA 339+94.24
2~8'X6'X112' BOX CULVERT

SCALE: 1"=20' SHEET: 2 OF 2

DESIGN	FED. RD. DIV. NO.	STATE PROJECT NO.		HIGHWAY NO.
HJL	6	(SEE TITLE SHEET)		SH 289
GRAPHICS HJL	STATE	DISTRICT	COUNTY	SHEET NO.
CHECK NVS	TEXAS	DALLAS	COLLIN	256
CHECK	CONTROL	SECTION	JOB	
	0091	04	055	

12:40:38 PM 6/24/2011

R-201104-01

TABLE OF QUANTITIES

BID ITEM	DESCRIPTION	QUANTITY	UNIT
**	STRUCT EXCAV (CHANNEL)	32	CY
**	STRUCT EXCAV (BOX)	570	CY
402-2001	TRENCH EXCAV PROTECT.	120	LF
462-2024	CONC. BOX CULV (9 FT X 5 FT)	342	LF
466-2009	WINGWALL (SW-0) (HW = 7 FT)	1	EA
466-2010	WINGWALL (SW-0) (HW = 8 FT)	1	EA

** FOR CONTRACTOR'S INFORMATION ONLY

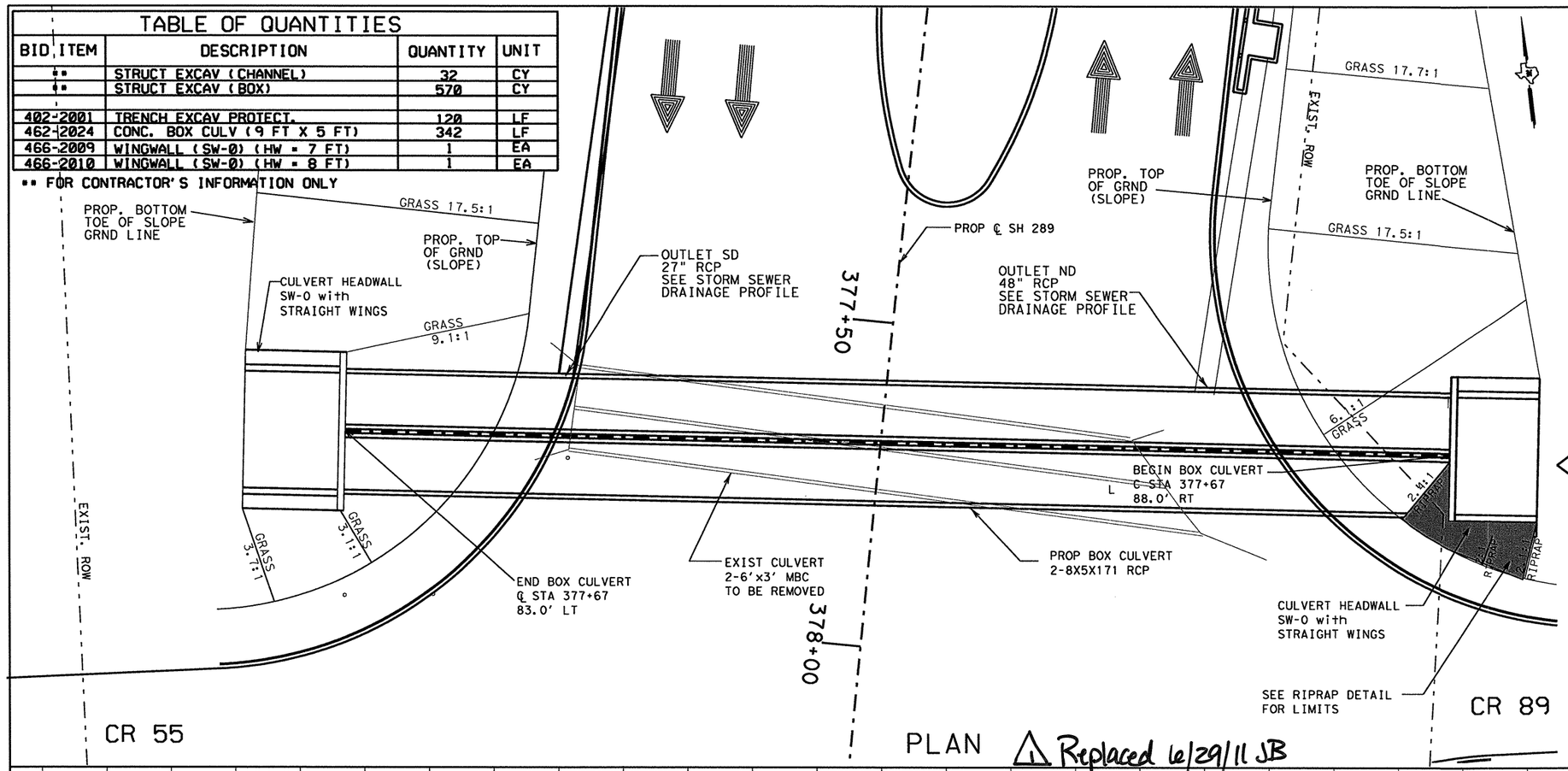

PLAN △1 Replaced 6/29/11 JB

CULVERT HYDRAULIC DATA	
DRAINAGE AREA (ACRE) = 179.33	
SLOPE (FT/FT) = 0.0211	
EXISTING HYDRAULIC DATA	
CULVERT SIZE = 2 ~6' X 3'	
CULVERT LENGTH (FT) = 91.00'	
CULVERT SLOPE (FT/FT) = 0.0033	
Q_{25} (CFS) = 577.40	Q_{100} (CFS) = 715.50
V_{25} (FPS) = 10.58	V_{100} (FPS) = 10.43
HW ELE_{25} (FT) = 685.10	HW ELE_{100} (FT) = 685.43
TW ELE_{25} (FT) = 691.89	TW ELE_{100} (FT) = 692.88
PROPOSED HYDRAULIC DATA	
CULVERT SIZE = 2 ~ 8' X 5'	
CULVERT LENGTH (FT) = 171.00'	
CULVERT SLOPE (FT/FT) = 0.0088	
Q_{25} (CFS) = 577.40	Q_{100} (CFS) = 715.50
V_{25} (FPS) = 14.09	V_{100} (FPS) = 14.87
HW ELE_{25} (FT) = 681.90	HW ELE_{100} (FT) = 683.09
TW ELE_{25} (FT) = 678.11	TW ELE_{100} (FT) = 678.53

SEE STORM SEWER SHEETS FOR STORM SEWER CONNECTING TO CULVERTS

DRAINAGE CALCULATION NOTES:

1. HYDROLOGY METHOD: RATIONAL METHOD (TXDOT HYDRAULIC MANUAL REVISED MARCH 2009)

2. HYDRAULIC METHOD: TXDOT CULVERT THYSYS HY-8, 7.0

NOTES:

1. SEE BCS SHEET FOR WING END CONFIGURATION.

*The 25-year tailwater elevation 678.11 was determined at Culvert #3 outfall by a normal depth computation, and assuming channel bedslope of 0.01

**The 100-year tailwater elevation 678.53 was determined at Culvert #3 outfall by a normal depth computation, and assuming channel bedslope of 0.01

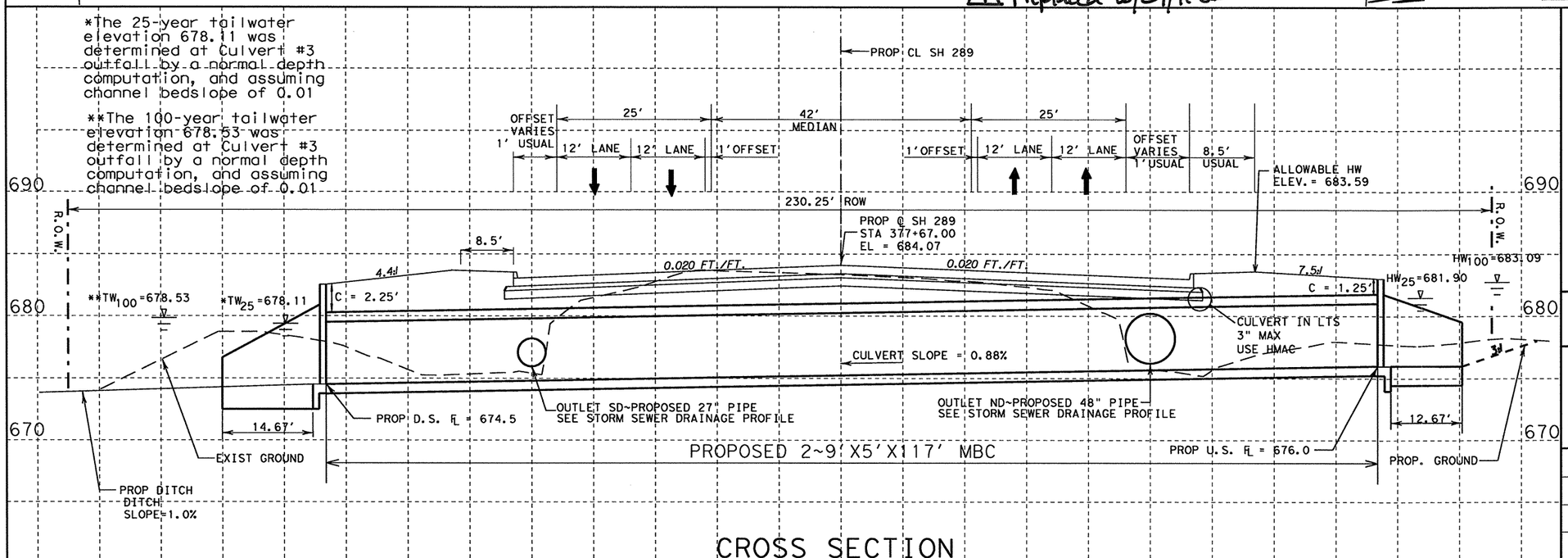

CROSS SECTION

STATE OF TEXAS
NICHOLAS VON SPENCER
93702
LICENSED PROFESSIONAL ENGINEER

Signature of Registrant , P.E. & Date 6-27-11

Texas Department of Transportation
© 2011

CULVERT #3 LAYOUT
STA 377+67.00
2-8X5X171 BOX CULVERT

SCALE: 1" = 20' HORIZONTAL
1" = 10' VERTICAL

SHEET 1 OF 1

DESIGN	FED. RD. DIV. NO.	STATE PROJECT NO.		HIGHWAY NO.
DF	6	(SEE TITLE SHEET)		SH 289
GRAPHICS DF	STATE	DISTRICT	COUNTY	SHEET NO.
CHECK NVS	TEXAS	DALLAS	COLLIN	257
CHECK NVS	CONTROL 0091	SECTION 04	JOB 055	

T:\DAGGN*A\SH 289 Celina\THE PLANS\Culverts\Culvert #3.dgn

6/24/2011 12:41:27 PM

R-201104-01

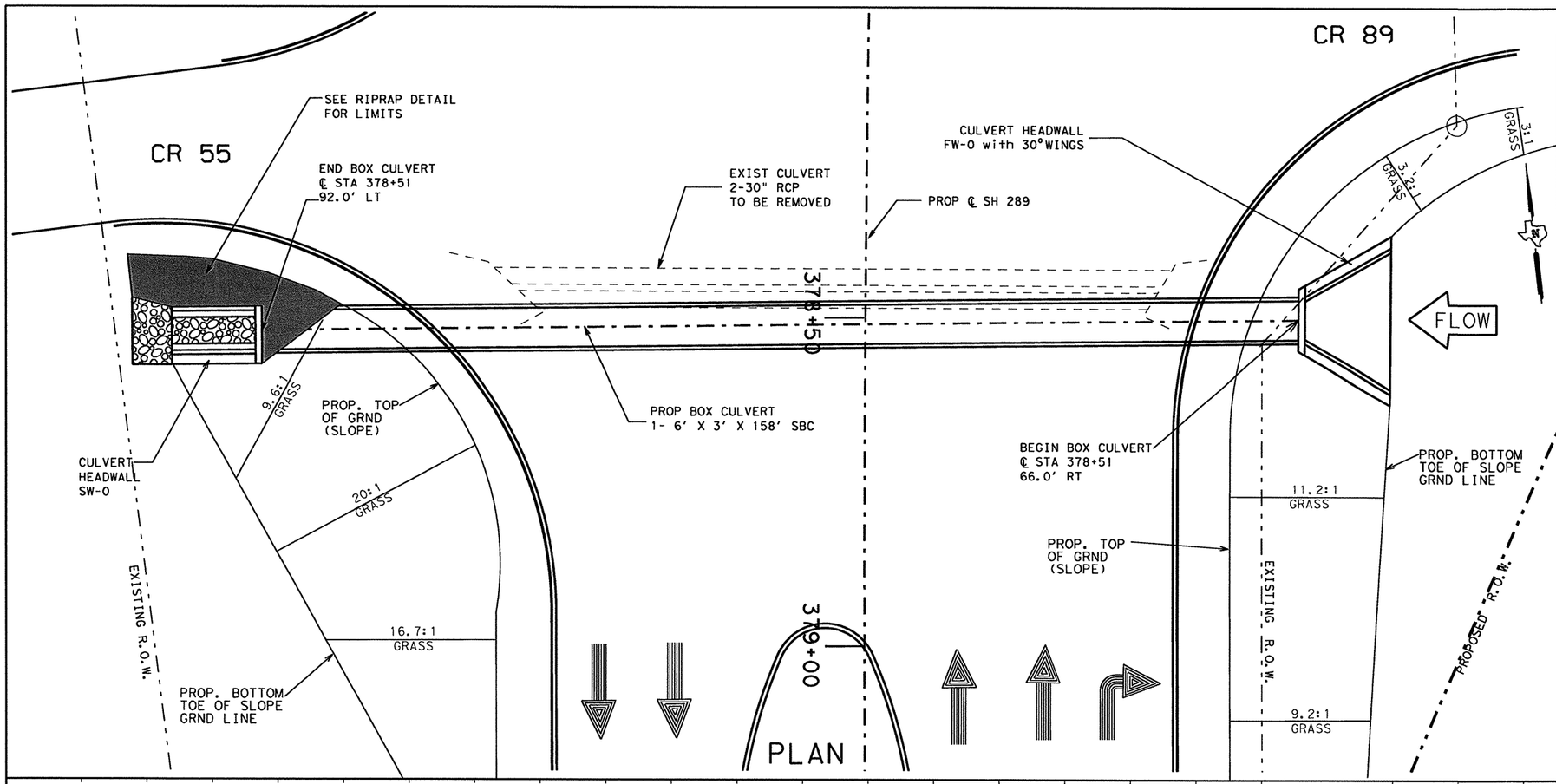

TABLE OF QUANTITIES

BID ITEM	DESCRIPTION	QUANTITY	UNIT
**	STRUCT EXCAV (CHANNEL)	124	CY
**	STRUCT EXCAV (BOX)	106	CY
402-2001	TRENCH EXCAV PROTECT.	130	LF
459-2012	GABION MATTRESSES(GALV)(18 IN)	15	SY
462-2010	CONC. BOX CULV (6 FT X 3 FT)	158	LF
466-2007	WINGWALL (SW-0) (HW = 5 FT)	1	EA
466-2021	WINGWALL (FW) (HW = 5 FT)	1	EA

** FOR CONTRACTOR'S INFORMATION ONLY

DESIGN SPEED : 45 MPH
TRAFFIC EXISTING: 20,100 ADT YEAR 2010
PROJECTED : 31,000 ADT YEAR 2030
FUNCTIONAL CLASS: URBAN PRINCIPAL ARTERIAL

CULVERT HYDRAULIC DATA

DRAINAGE AREA (ACRE) = 179.33	
SLOPE (FT/FT) = 0.012	
EXISTING HYDRAULIC DATA	
CULVERT SIZE = 2 ~5' X 3'	
CULVERT LENGTH (FT) = 101'	
CULVERT SLOPE (FT/FT) = 0.012	
Q_{25} (CFS) = 60.50	Q_{100}(CFS) = 74.80
V_{25} (FPS) = 11.66	V_{100}(FPS) = 11.99
HW ELE_{25} (FT) = 682.03	HW ELE_{100} (FT) = 682.44
TW ELE_{25} (FT) = 678.52	TW ELE_{100} (FT) = 678.68
PROPOSED HYDRAULIC DATA	
CULVERT SIZE = 2 ~ 6' X 3'	
CULVERT LENGTH (FT) = 158.00'	
CULVERT SLOPE (FT/FT) = 0.012	
Q_{25} (CFS) = 60.50	Q_{100}(CFS) = 74.80
V_{25} (FPS) = 10.82	V_{100}(FPS) = 11.24
HW ELE_{25} (FT) = 679.45	HW ELE_{100} (FT) = 679.80
TW ELE_{25} (FT) = 677.00	TW ELE_{100} (FT) = 677.20

Replaced 6/29/11 JB

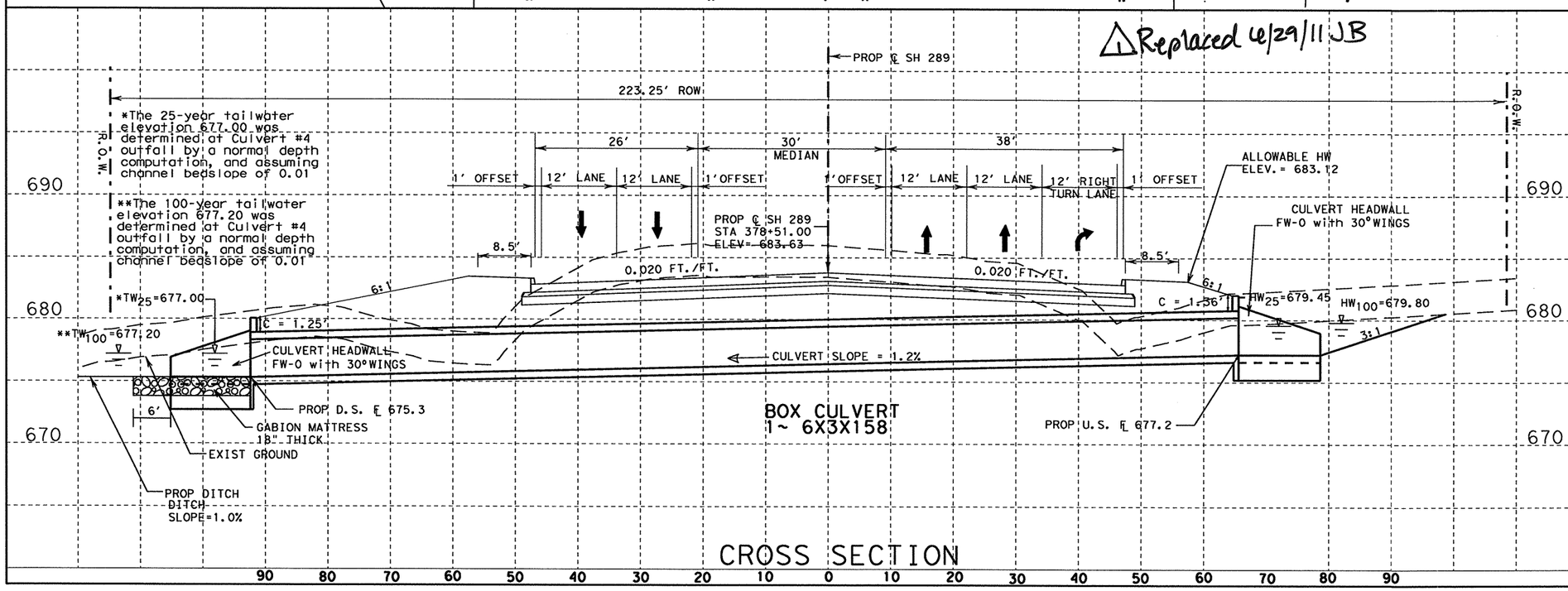

CROSS SECTION

STATE OF TEXAS
NICHOLAS VON SPENCER
93702
LICENSED PROFESSIONAL ENGINEER

Signature of Registrant & Date, P.E. 6-27-11

Texas Department of Transportation
© 2011

CULVERT #4 LAYOUT
STA 378+51.00
1-6X3X158 BOX CULVERT

SCALE: 1" = 20' HORIZONTAL
1" = 10' VERTICAL

SHEET 1 OF 2

DESIGN	FED. RD. DIV. NO.	STATE PROJECT NO.		HIGHWAY NO.
DF	6	(SEE TITLE SHEET)		SH 289
GRAPHICS DF	STATE	DISTRICT	COUNTY	SHEET NO.
CHECK NVS	TEXAS	DALLAS	COLLIN	258
CHECK	CONTROL	SECTION	JOB	
	0091	04	055	

12:43:18 PM
6/24/2011

T:\DALDGN\A\SH 289 Collin\THE PLANS\Culverts\Culvert #4.dgn

R-201104-01

DOWNSTREAM END ELEVATION
NTS

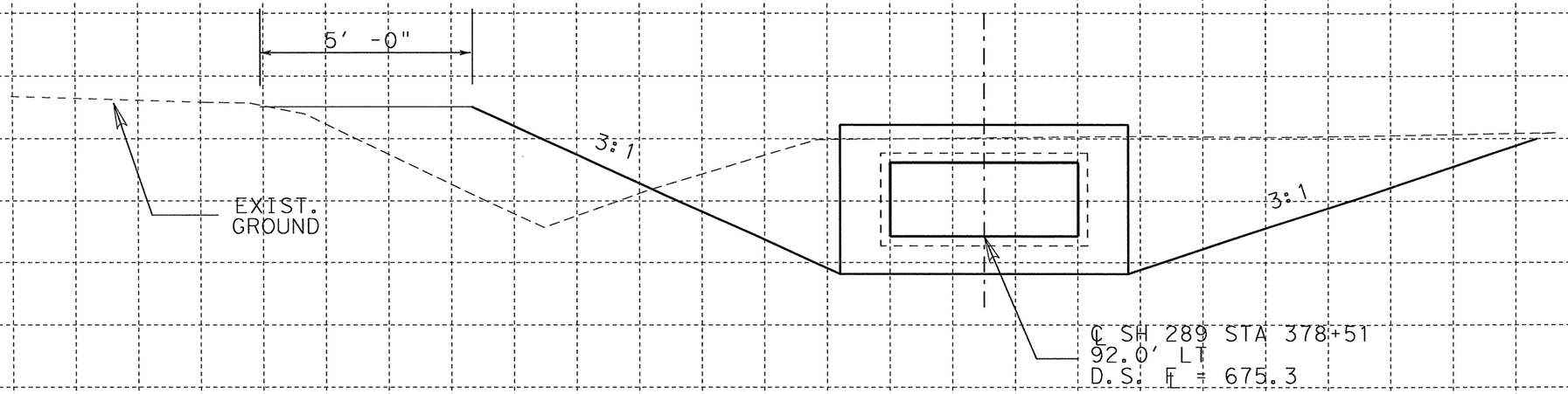

UPSTREAM END ELEVATION
NTS

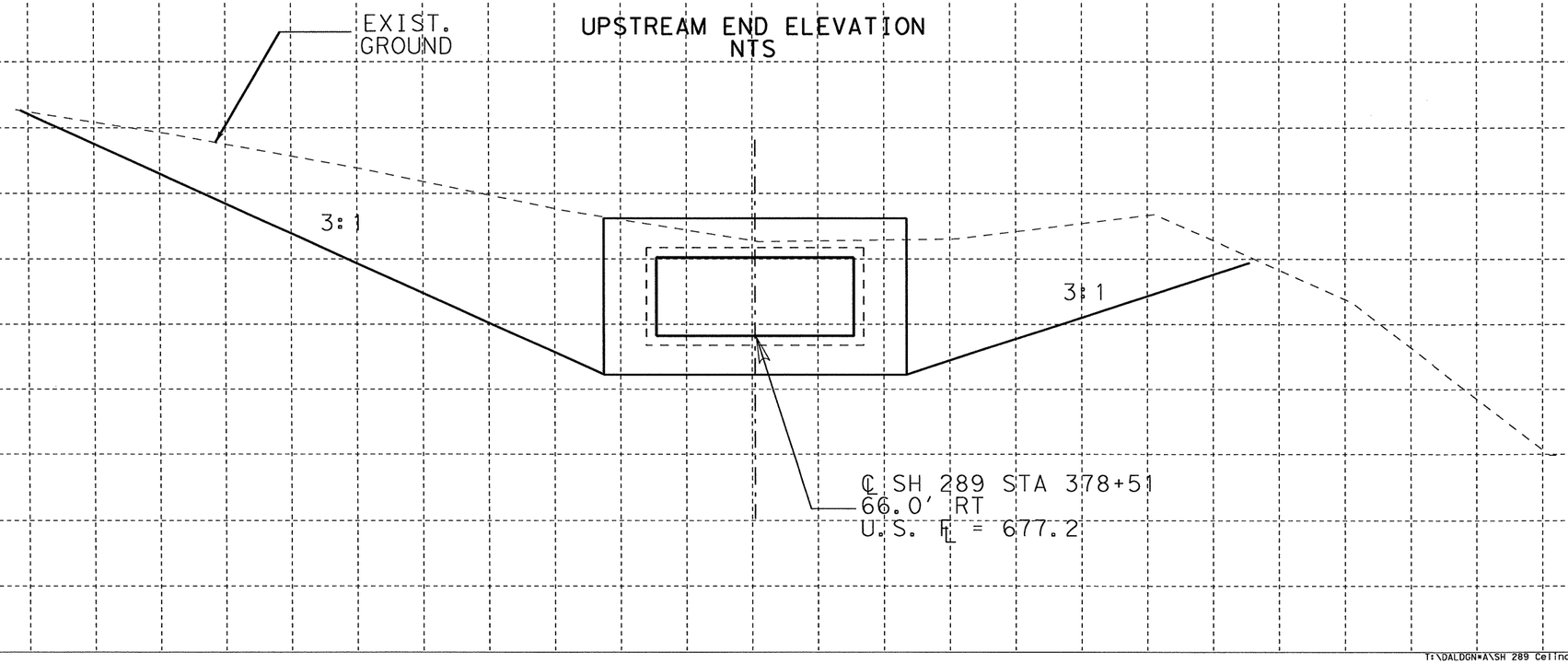

STATE OF TEXAS
NICHOLAS VON SPENCER
93702
LICENSED
PROFESSIONAL ENGINEER

Nicholas Von Spencer, P.E. 4-8-11
Signature of Registrant & Date

Texas Department of Transportation
© 2011

CULVERT #4 LAYOUT
STA 378+51.00
1-5X2X158 BOX CULVERT

SCALE: 1" = 20' HORIZONTAL
1" = 10' VERTICAL

SHEET 2 OF 2

DESIGN	FED. RD. DIV. NO.	STATE PROJECT NO.		HIGHWAY NO.
DF	6	(SEE TITLE SHEET)		SH 289
GRAPHICS DF	STATE	DISTRICT	COUNTY	SHEET NO.
CHECK NVS	TEXAS	DALLAS	COLLIN	259
CHECK	CONTROL	SECTION	JOB	
	0091	04	055	

T:\DALDGN*A\SH 289 Celina\THE PLANS\Culverts\Culvert #4.dgn

7:14:02 AM
4/8/2011

R-201104-01

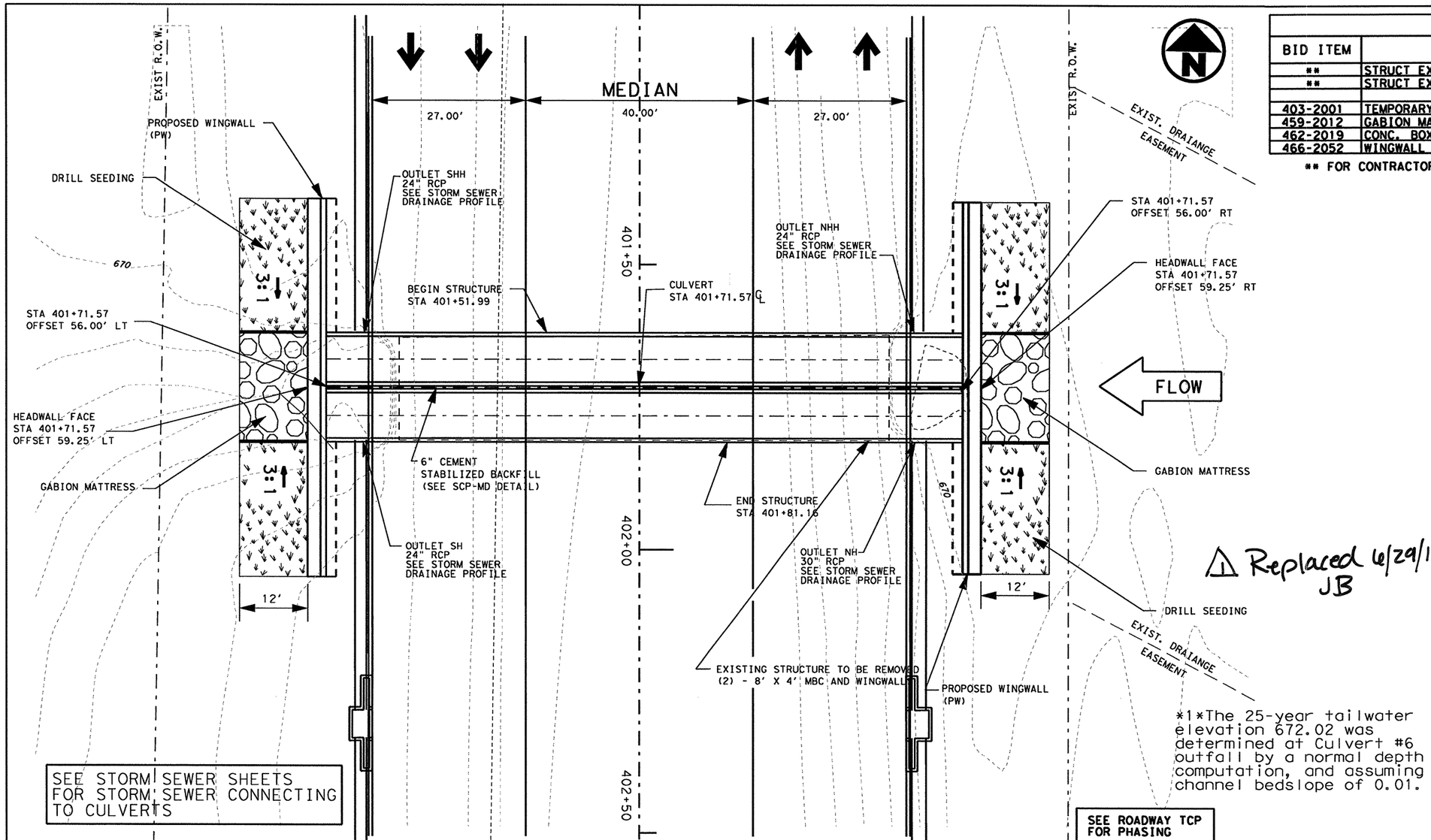

SEE STORM SEWER SHEETS FOR STORM SEWER CONNECTING TO CULVERTS

SEE ROADWAY TCP FOR PHASING

TABLE OF QUANTITIES			
BID ITEM	DESCRIPTION	QUANTITY	UNIT
**	STRUCT EXCAV (CHANNEL)	42	CY
**	STRUCT EXCAV (BOX)	266	CY
403-2001	TEMPORARY SPL SHORING	649	SF
459-2012	GABION MATTRESS (18") (GALV.)	52	SY
462-2019	CONC. BOX CULV (8 FT X 4 FT)	224	LF
466-2052	WINGWALL (PW) (HW=8 FT)	2	EA

** FOR CONTRACTOR'S INFORMATION ONLY

EXISTING HYDRAULIC DATA			
25 YEAR		100 YEAR	
Q (CFS)	539.87	Q (CFS)	702.34
V (FPS)	10.28	V (FPS)	16.45
WS ELEV.	674.73	WS ELEV.	676.48

PROPOSED HYDRAULIC DATA			
25 YEAR		100 YEAR	
Q (CFS)	539.87	Q (CFS)	702.34
V (FPS)	10.28	V (FPS)	15.93
WS ELEV.	674.85	WS ELEV.	676.57

DRAINAGE AREA = 122.49 ACRES

REQUIRED STANDARDS:
1. PW: PARALLEL WINGS SKEWED/NON SKEWED
2. SCC-8: BOX CULVERT CAST IN PLACE 8' SPAN
3. MC-MD: PRECAST MISCELLANEOUS DETAILS
4. BCS: SUPPLEMENT WING AND END TREATMENT

△1 Replaced 6/29/11 JB

DESIGN SPEED : 45 MPH
TRAFFIC EXISTING: 20,100 ADT YEAR 2010
PROJECTED : 31,000 ADT YEAR 2030
FUNCTIONAL CLASS: URBAN PRINCIPAL ARTERIAL

*1*The 25-year tailwater elevation 672.02 was determined at Culvert #6 outfall by a normal depth computation, and assuming channel bedslope of 0.01.

*2*The 100-year tailwater elevation 672.56 was determined at Culvert #6 outfall by a normal depth computation, and assuming channel bedslope of 0.01.

STATE OF TEXAS
MAHER F. KARAM
107452
LICENSED PROFESSIONAL ENGINEER

Signature of Registrant & Date, P.E. 6/27/11

Texas Department of Transportation
© 2011

CULVERT #6 LAYOUT
STA 401+71.57
2~8X4 MBC

SCALE: HORIZ: 1"=20' VERT: 1"=20' SHEET 1 OF 2

DESIGN	FED. RD. DIV. NO.	STATE PROJECT NO.		HIGHWAY NO.
MK	6	(SEE TITLE SHEET)		SH 289
GRAPHICS	STATE	DISTRICT	COUNTY	SHEET NO.
MK	TEXAS	DALLAS	COLLIN	
CHECK	CONTROL	SECTION	JOB	
NVS	0091	04	055	260
CHECK NVS				

12:43:52 PM
6/24/2011

DOE BRANCH UNNAMED TRIBUTARY
SH 289 CL STA 401+71.57 AT 0° SKEW

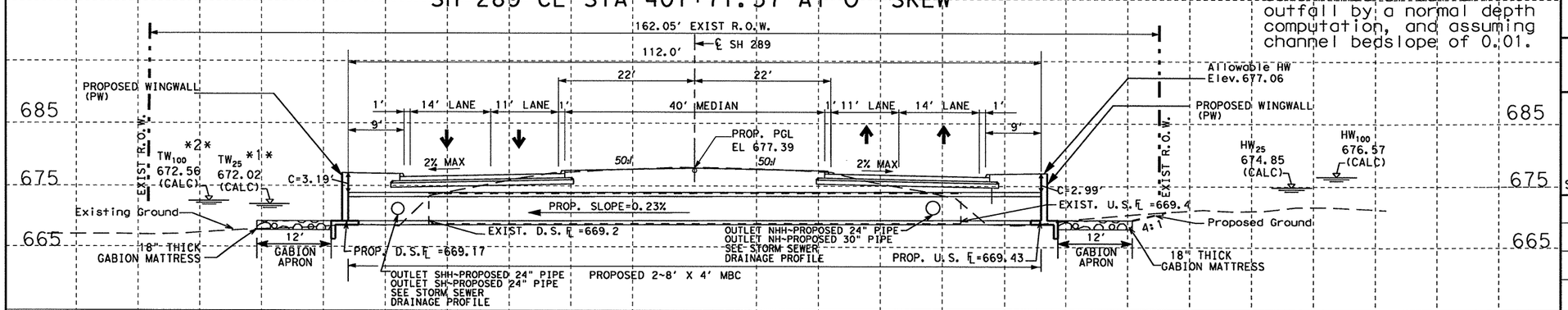

R-201104-01

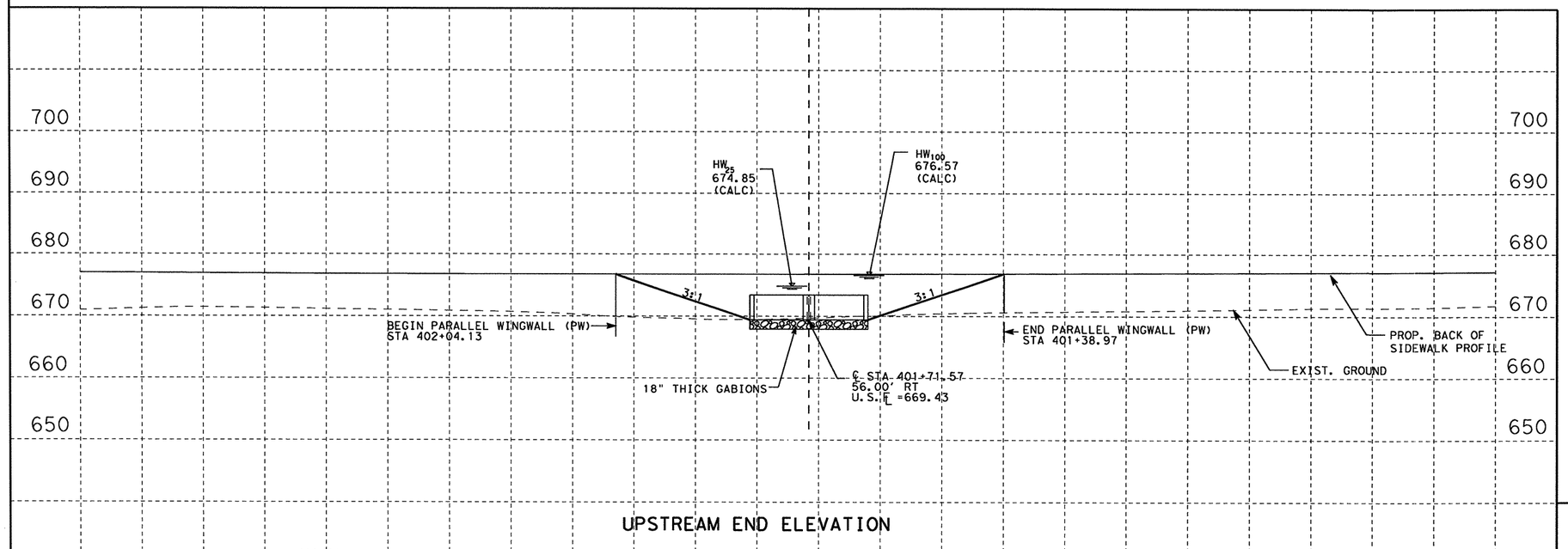

UPSTREAM END ELEVATION

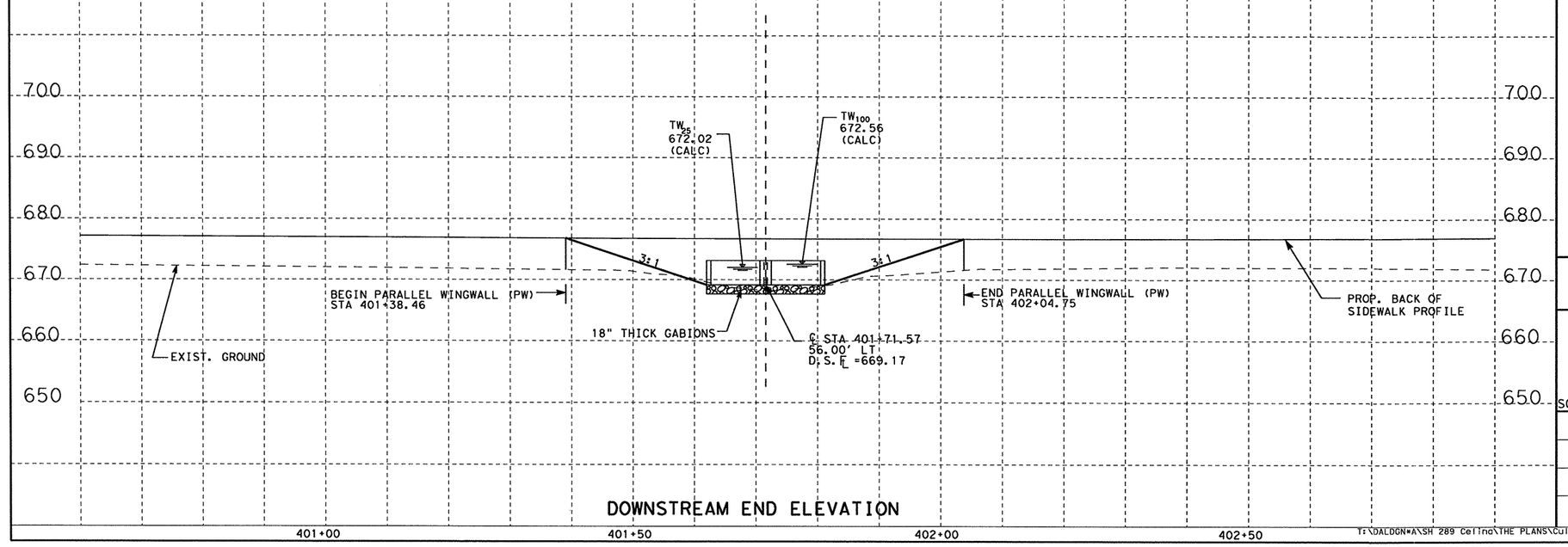

DOWNSTREAM END ELEVATION

STATE OF TEXAS
MAHER F. KARAM
107452
LICENSED
PROFESSIONAL ENGINEER

Signature of Registrant & Date, P.E. 4/8/11

Texas Department of Transportation
© 2011

CULVERT #6 LAYOUT
STA 401+71.57
2~8X4 MBC

SCALE:1"=20'

SHEET 2 OF 2

DESIGN	FED. RD. DIV. NO.	STATE PROJECT NO.		HIGHWAY NO.
MK	6	(SEE TITLE SHEET)		SH 289
GRAPHICS	STATE	DISTRICT	COUNTY	SHEET NO.
MK	TEXAS	DALLAS	COLLIN	261
CHECK	CONTROL	SECTION	JOB	
NVS	0091	04	055	
CHECK				
NVS				

T:\DALDGN*A\SH 289 Celina\THE PLANS\Culverts\Culvert #6.dgn

4/8/2011 7:14:18 AM

R-201104-01

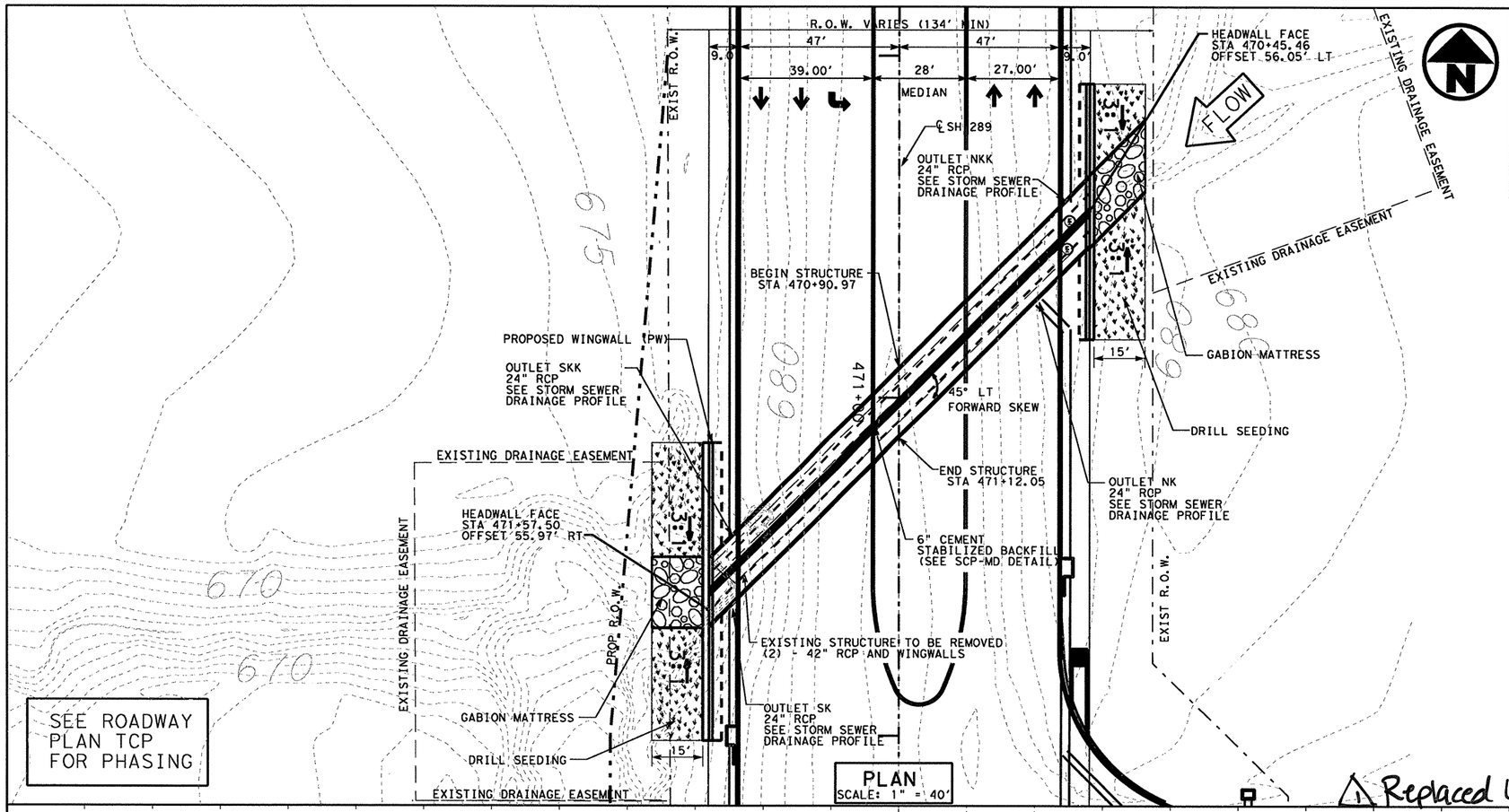

SEE ROADWAY PLAN TCP FOR PHASING

PLAN
SCALE: 1" = 40'

Replaced 6/29/11 JB

TABLE OF QUANTITIES			
BID ITEM	DESCRIPTION	QUANTITY	UNIT
**	STRUCT EXCAV (CHANNEL)	559	CY
**	STRUCT EXCAV (BOX)	282	CY
403-2001	TEMPORARY SPL SHORING	1322	SF
459-2012	GABION MATTRESS (18") (GALV.)	70	SY
462-2011	CONC BOX CULV (6 FT X 4 FT)	317	LF
466-2051	WINGWALL (PW) (HW=7 FT)	1	EA
466-2052	WINGWALL (PW) (HW=8 FT)	1	EA

** FOR CONTRACTOR'S INFORMATION ONLY

EXISTING HYDRAULIC DATA			
25 YEAR		100 YEAR	
Q (CFS)	267.8	Q (CFS)	332.4
V (FPS)	6.25	V (FPS)	8.75
WS ELEV.	673.18	WS ELEV.	673.36

PROPOSED HYDRAULIC DATA			
25 YEAR		100 YEAR	
Q (CFS)	267.8	Q (CFS)	332.4
V (FPS)	12.38	V (FPS)	13.08
WS ELEV.	677.94	WS ELEV.	678.64

DRAINAGE AREA = 57.71 ACRES

DRAINAGE CALCULATION NOTES:

1. HYDROLOGY METHOD: RATIONAL METHOD (TXDOT HYDRAULIC MANUAL REVISED MARCH 2009)
2. HYDRAULIC METHOD: TXDOT CULVERT THYSYS VERSION 1.2, 2002

REQUIRED STANDARDS:
1. PW: PARALLEL WINGS SKEWED/NON SKEWED
2. SCP-6: BOX CULVERT PRECAST 6' SPAN
3. SCP-MD: PRECAST MISCELLANEOUS DETAILS
4. BCS: SUPPLEMENT WING AND END TREATMENT

DESIGN SPEED : 45 MPH
TRAFFIC EXISTING: 20,100 ADT YEAR 2010
PROJECTED : 31,000 ADT YEAR 2030
FUNCTIONAL CLASS: URBAN PRINCIPAL ARTERIAL

*1*The 25-year tailwater elevation 673.18 was determined at Culvert #8 outfall by a normal depth computation, and assuming channel bedslope of 0.01.

*2*The 100-year tailwater elevation 673.36 was determined at Culvert #8 outfall by a normal depth computation, and assuming channel bedslope of 0.01.

SEE STORM SEWER SHEETS FOR STORM SEWER CONNECTING TO CULVERTS

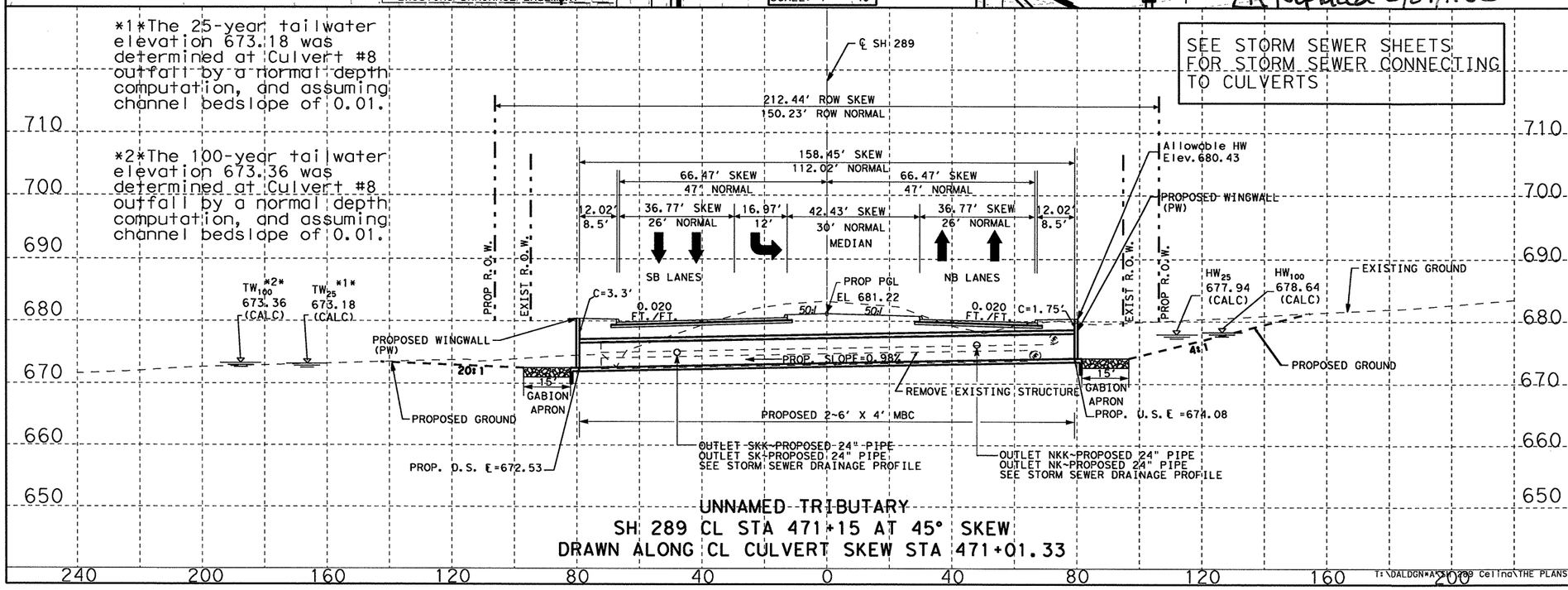

UNNAMED TRIBUTARY
SH 289 CL STA 471+15 AT 45° SKEW
DRAWN ALONG CL CULVERT SKEW STA 471+01.33

STATE OF TEXAS
MAHER F. KARAM
107452
LICENSED PROFESSIONAL ENGINEER

Signature of Registrant , P.E. & Date 6/27/11

Texas Department of Transportation
© 2011

CULVERT #8 LAYOUT
STA 471+15
2~6X4 MBC

SCALE: HORIZ: 1"=40' VERT: 1"=20' SHEET 1 OF 2

DESIGN	FED. RD. DIV. NO.	STATE PROJECT NO.		HIGHWAY NO.
MK	6	(SEE TITLE SHEET)		SH 289
GRAPHICS	STATE	DISTRICT	COUNTY	SHEET NO.
MK	TEXAS	DALLAS	COLLIN	262
CHECK	CONTROL	SECTION	JOB	
NVS	0091	04	055	
CHECK				
NVS				

T:\DALDGN*AS\0289 Collna\THE PLANS\Culverts\Culvert #8.dgn

12:44:43 PM 6/24/2011

R-201104-01

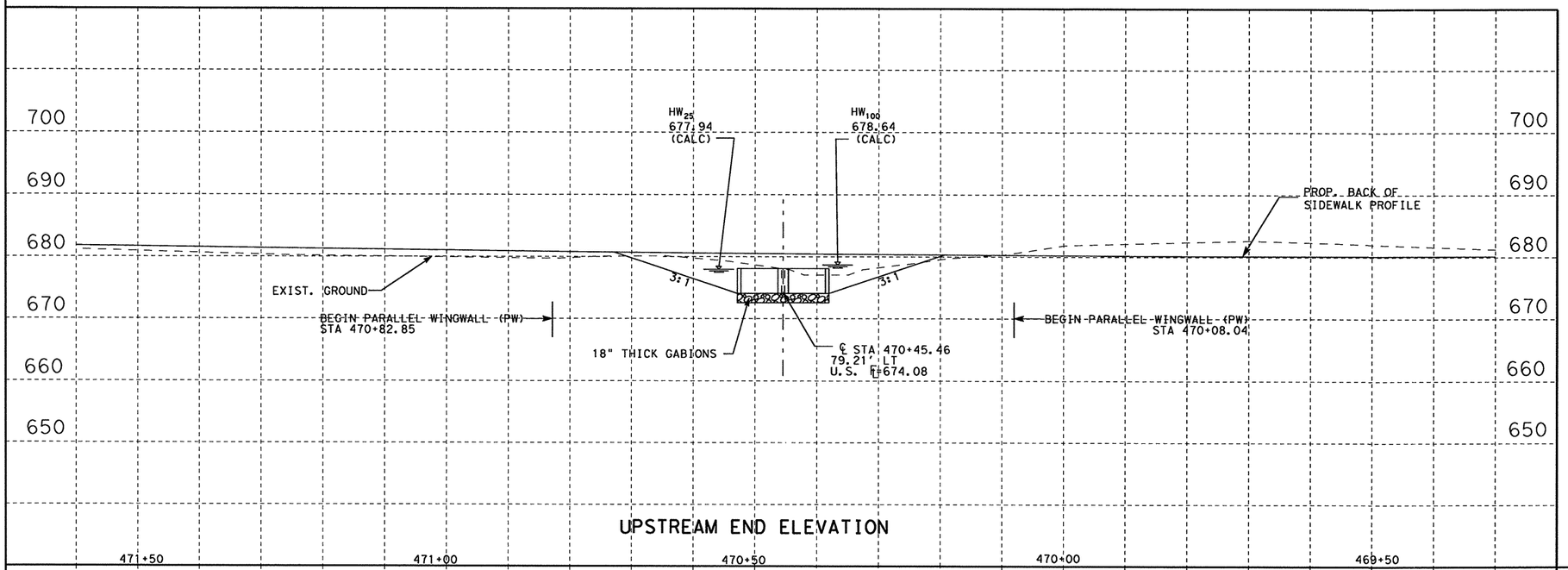

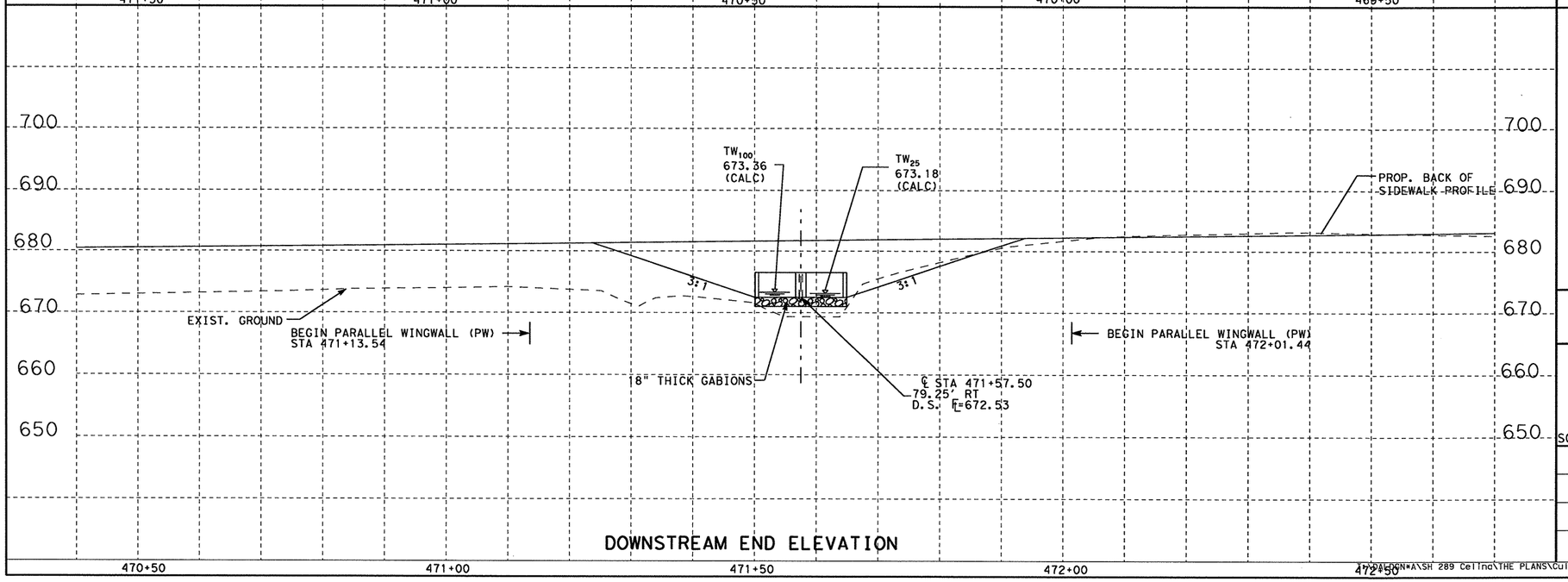

STATE OF TEXAS
MAHER F. KARAM
107452
LICENSED
PROFESSIONAL ENGINEER

Signature of Registrant, P.E. & Date 4/8/11

Texas Department of Transportation
© 2011

CULVERT #8 LAYOUT
STA 471+15
2~6X4 MBC

SCALE:1"=20'

SHEET 2 OF 2

DESIGN	FED. RD. DIV. NO.	STATE PROJECT NO.		HIGHWAY NO.
MK	6	(SEE TITLE SHEET)		SH 289
GRAPHICS	STATE	DISTRICT	COUNTY	SHEET NO.
MK	TEXAS	DALLAS	COLLIN	263
CHECK	CONTROL	SECTION	JOB	
NVS	0091	04	055	
CHECK				
NVS				

I:\DALDGN*A\SH 289 Celina\THE PLANS\Culverts\Culvert #8.dgn

4/8/2011 7:14:47 AM

R-201104-01

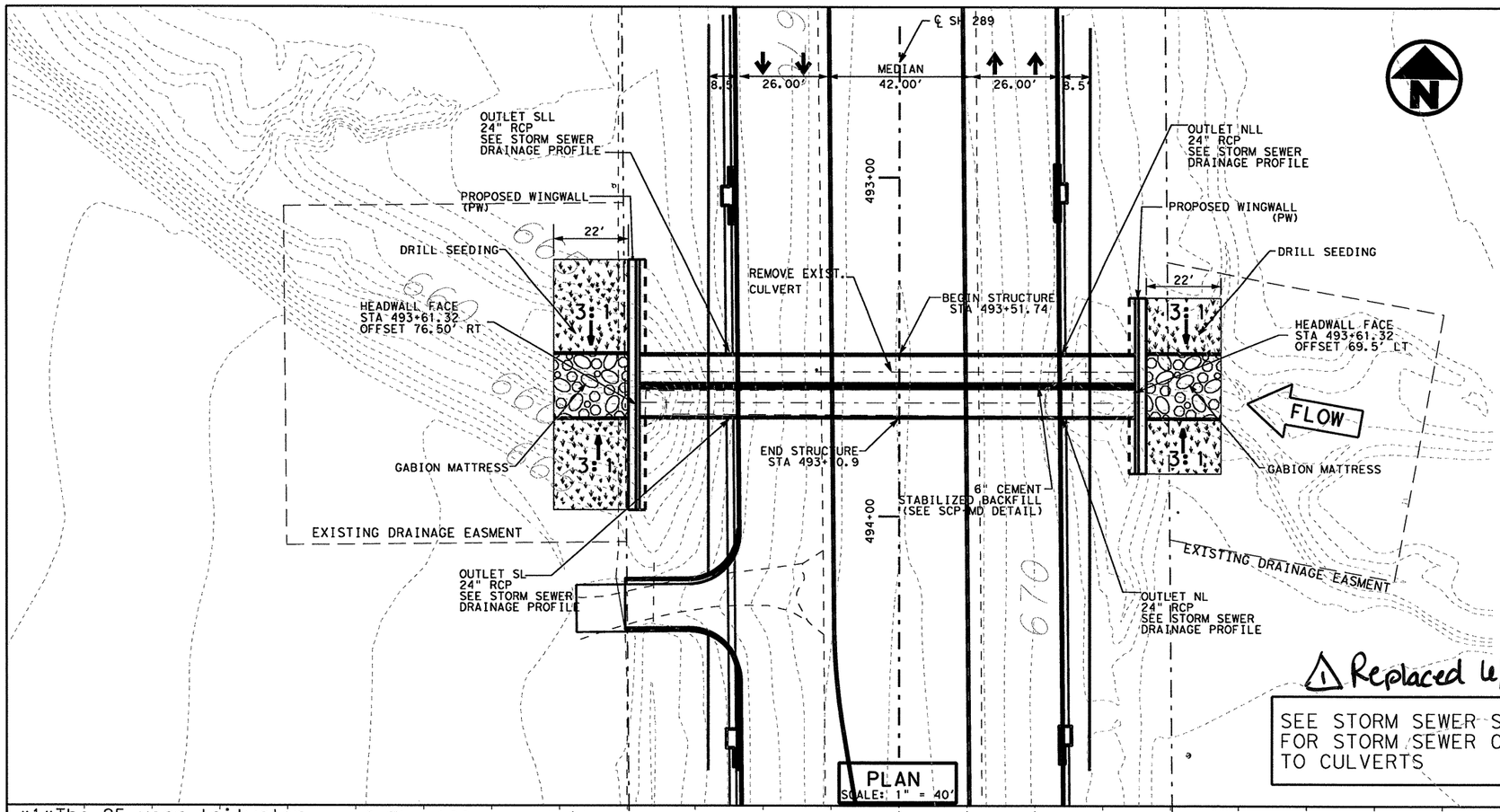

PLAN
SCALE: 1" = 40'

TABLE OF QUANTITIES			
BID ITEM	DESCRIPTION	QUANTITY	UNIT
**	STRUCT EXCAV (CHANNEL)	380	CY
**	STRUCT EXCAV (BOX)	347	CY
403-2001	TEMPORARY SPL SHORING	1056	SF
459-2012	GABION MATTRESS (18") (GALV.)	94	SY
462-2029	CONC. BOX CULV (8 FT X 4 FT)	292	LF
466-2050	WINGWALL (PW) (HW=6 FT)	1	EA
466-2054	WINGWALL (PW) (HW=10 FT)	1	EA

** FOR CONTRACTOR'S INFORMATION ONLY

EXISTING HYDRAULIC DATA			
25 YEAR		100 YEAR	
Q (CFS)	529	Q (CFS)	692
V (FPS)	28.45	V (FPS)	29.78
WS ELEV.	673.89	WS ELEV.	675.79

PROPOSED HYDRAULIC DATA			
25 YEAR		100 YEAR	
Q (CFS)	529	Q (CFS)	692
V (FPS)	8.27	V (FPS)	10.81
WS ELEV.	669.26	WS ELEV.	670.34

DRAINAGE AREA = 140.89 ACRES

REQUIRED STANDARDS:
1. PW: PARALLEL WINGS SKEWED/NON SKEWED
2. SCP-8: BOX CULVERT PRECAST 8' SPAN
3. SCP-MD: PRECAST MISCELLANEOUS DETAILS
4. BCS: SUPPLEMENT WING AND END TREATMENT

DESIGN SPEED : 45 MPH
TRAFFIC EXISTING: 20,100 ADT YEAR 2010
PROJECTED : 31,000 ADT YEAR 2030
FUNCTIONAL CLASS: URBAN PRINCIPAL ARTERIAL

1 Replaced 6/29/11 JB

SEE STORM SEWER SHEETS FOR STORM SEWER CONNECTING TO CULVERTS

*1*The 25-year tailwater elevation 663.03 was determined at Culvert #9 outfall by a normal depth computation, and assuming channel bedslope of 0.01.

*2*The 100-year tailwater elevation 663.55 was determined at Culvert #9 outfall by a normal depth computation, and assuming channel bedslope of 0.01.

DOE BRANCH UNNAMED TRIBUTARY

SH 289 CL STA 493+61.32 AT 0° SKEW

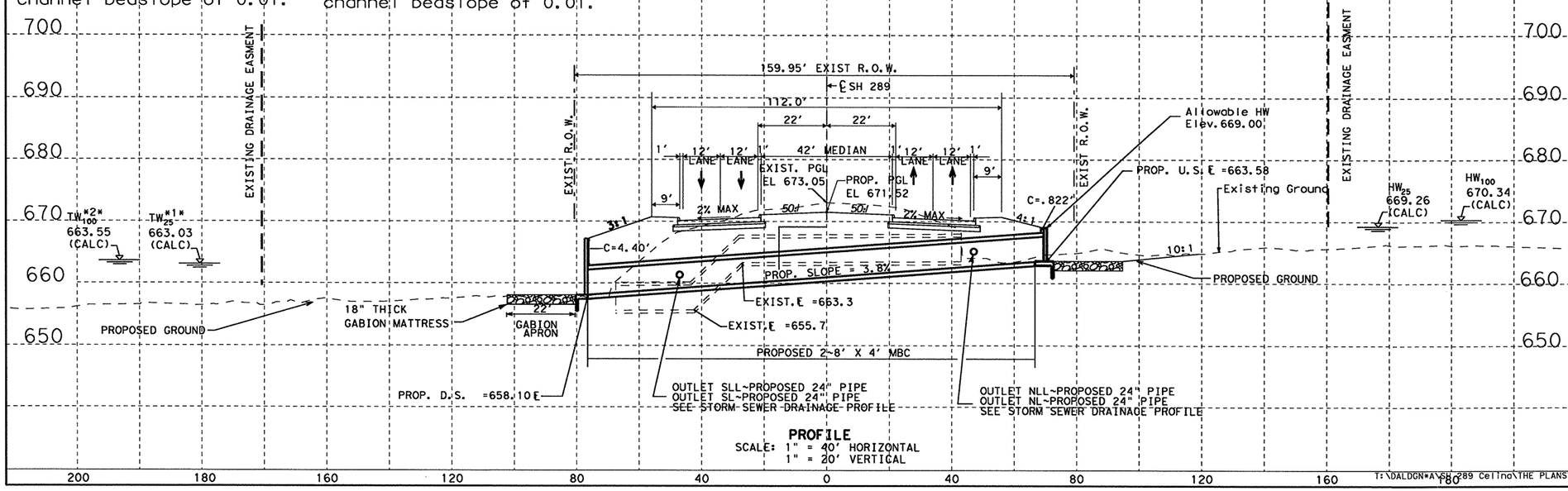

PROFILE
SCALE: 1" = 40' HORIZONTAL
1" = 20' VERTICAL

STATE OF TEXAS
MAHER F. KARAM
107452
LICENSED PROFESSIONAL ENGINEER

Signature of Registrant & Date, P.E. 6/27/11

Texas Department of Transportation
© 2011

SH 289 UNNAMED TRIBUTARY CULVERT LAYOUT #9

SCALE: HORIZ: 1"=40' VERT: 1"=20' SHEET 1 OF 2

DESIGN	FED. RD. DIV. NO.	STATE PROJECT NO.		HIGHWAY NO.
MK	6	(SEE TITLE SHEET)		SH 289
GRAPHICS MK	STATE	DISTRICT	COUNTY	SHEET NO.
CHECK NVS	TEXAS	DALLAS	COLLIN	264
CHECK NVS	CONTROL	SECTION	JOB	
	0091	04	055	

T:\DALDGN*A\SH 289 Celina\THE PLANS\Culverts\Culvert #9.dgn

12:45:14 PM 6/24/2011

R-201104-01

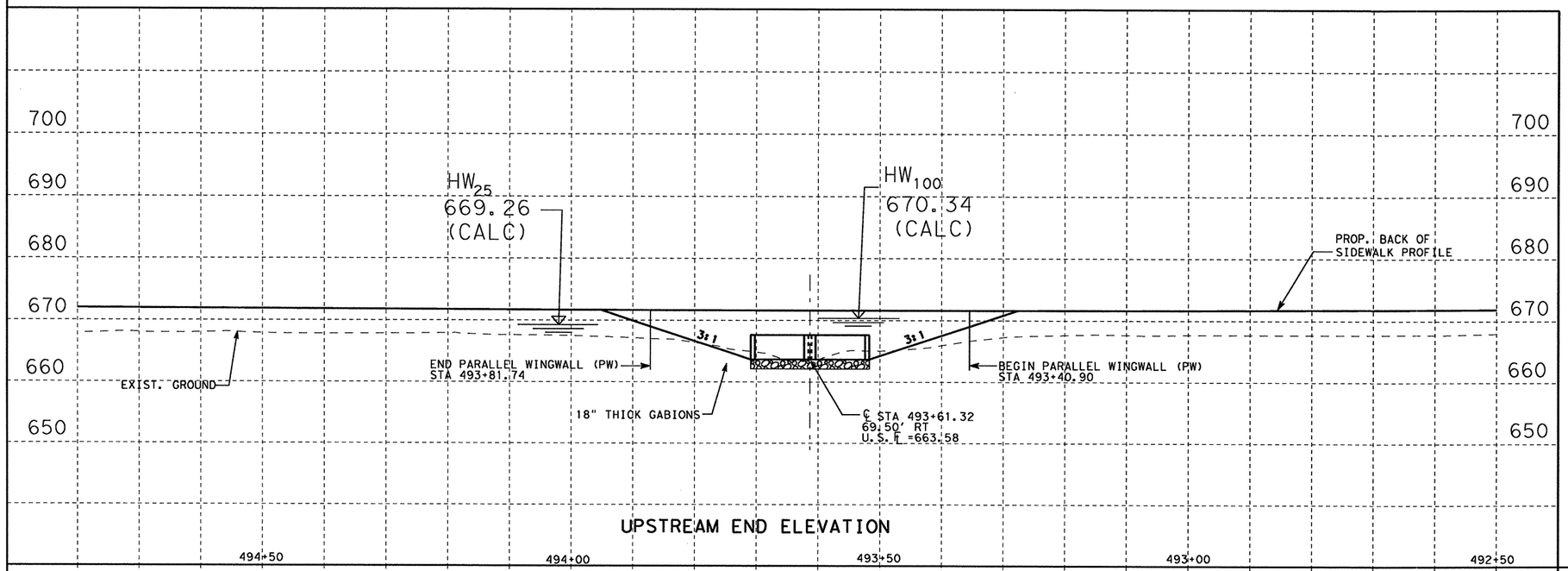

UPSTREAM END ELEVATION

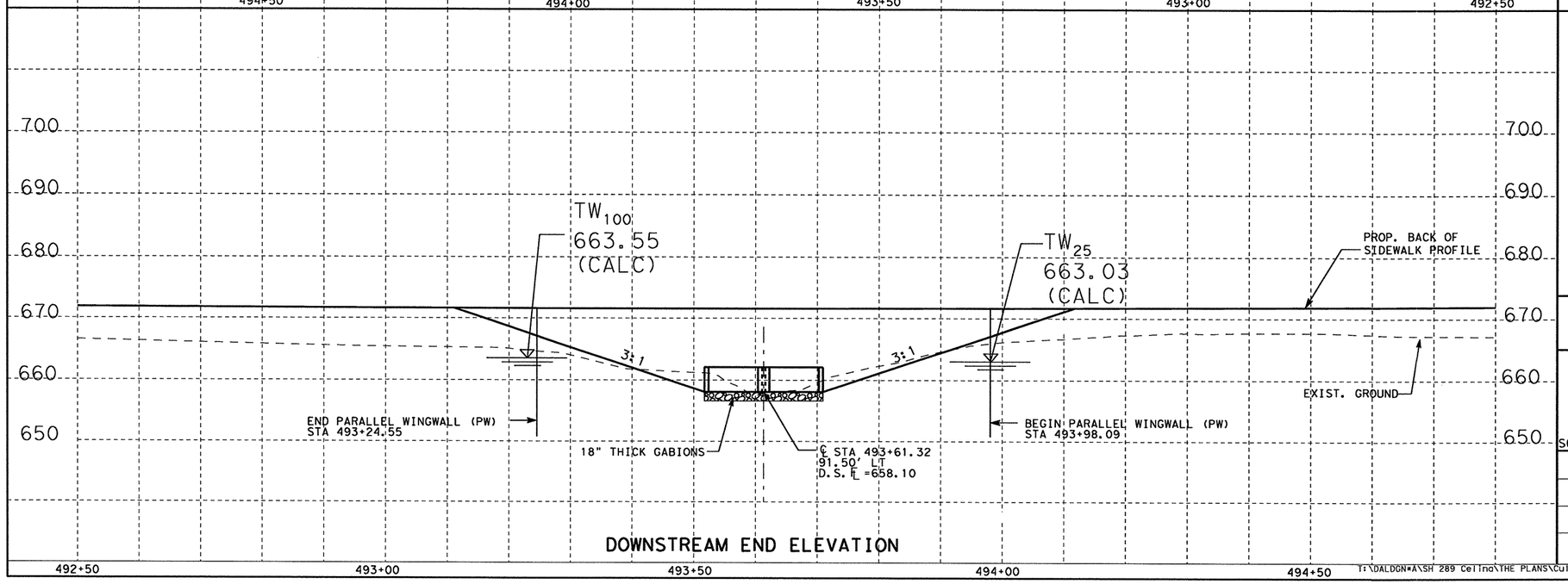

DOWNSTREAM END ELEVATION

STATE OF TEXAS
MAHER F. KARAM
107452
LICENSED PROFESSIONAL ENGINEER

Signature of Registrant , P.E. & Date 4/8/11

Texas Department of Transportation
© 2011

SH 289 UNNAMED TRIBUTARY CULVERT LAYOUT #9

SCALE:1"=20' SHEET 2 OF 2

DESIGN	FED. RD. DIV. NO.	STATE PROJECT NO.			HIGHWAY NO.
MK	6	(SEE TITLE SHEET)			SH 289
GRAPHICS MK	STATE	DISTRICT	COUNTY		SHEET NO.
CHECK NVS	TEXAS	DALLAS	COLLIN		265
CHECK NVS	CONTROL	SECTION	JOB		
	0091	04	055		

T:\DALDGN*A\SH 289 Collno\THE PLANS\Culverts\Culvert #9.dgn

4/8/2011 7:15:05 AM

R-201104-01

RUNOFF COMPUTATIONS

NW ID	Area ID	Acres-Drained: Total Area (acre)	Pav. C = 0.90 (acre)	Comm. C=0.85 (acre)	ROW C = 0.70 (acre)	Res. C = 0.50 (acre)	Grass C = 0.15 (acre)	C Value (Comp.)	Time of Conc: Total CA	Actual (min)	Design (min)	Freq. (yr)	I (in/hr)	Q (cfs)
NBB	CI-NBB1	0.73	0.31	0.23			0.19	0.69	0.51	2.63	10.00	5.00	6.78	3.42
	CI-NBB2	0.46	0.46					0.90	0.41	2.57	10.00	5.00	6.78	2.78
	GI-NBB1	0.19					0.19	0.15	0.03	3.18	10.00	5.00	6.78	0.20
	GI-NBB2	6.02		4.27	0.95		0.81	0.73	4.41	12.51	12.51	5.00	6.14	27.10
SBB	CI-SBB2	0.09	0.09					0.90	0.08	1.70	10.00	5.00	6.78	0.56
	CI-SBB1	0.61	0.61					0.90	0.55	2.85	10.00	5.00	6.78	3.72
	CI-SBB0	0.16	0.16					0.90	0.15	2.91	10.00	5.00	6.78	0.99
	GI-SBB1	14.20			2.25		11.96	0.24	3.37	36.19	36.19	5.00	3.43	11.54
NB	CI-NB15	0.30	0.33					0.90	0.27	3.50	10.00	5.00	6.78	1.82
	CI-NB11	0.44	0.16	0.20			0.08	0.73	0.32	2.73	10.00	5.00	6.78	2.19
	CI-NB10	0.94	0.51				0.44	0.55	0.52	5.78	10.00	5.00	6.78	3.54
	CI-NB9	0.54	0.54					0.90	0.48	1.61	10.00	5.00	6.78	3.27
	CI-NB8	0.51		0.51				0.85	0.44	1.27	10.00	5.00	6.78	2.95
	CI-NB7	0.45	0.45					0.90	0.41	2.15	10.00	5.00	6.78	2.74
	CI-NB6	0.70	0.70					0.90	0.63	3.41	10.00	5.00	6.78	4.29
	GI-NB1	1.36		1.36				0.85	1.16	4.52	10.00	5.00	6.78	7.83
	CI-NB5	0.45	0.45					0.90	0.40	2.95	10.00	5.00	6.78	2.73
	CI-NB4	0.41	0.41					0.90	0.37	3.09	10.00	5.00	6.78	2.48
	CI-NB3	0.36	0.36					0.90	0.32	2.90	10.00	5.00	6.78	2.19
	CI-NB2	0.62	0.43				0.20	0.66	0.41	2.55	10.00	5.00	6.78	2.80
	CI-NB1	0.59	0.20	0.36			0.03	0.83	0.49	2.13	10.00	5.00	6.78	3.33
SB	CI-SB6	0.35	0.35					0.90	0.31	3.07	10.00	5.00	6.78	2.12
	CI-SB5	0.29	0.29					0.90	0.26	2.85	10.00	5.00	6.78	1.74
	CI-SB4	0.48	0.48					0.90	0.43	2.62	10.00	5.00	6.78	2.92
	CI-SB3	0.42	0.42					0.90	0.38	3.52	10.00	5.00	6.78	2.55
	CI-SB2	0.42	0.42					0.90	0.38	2.55	10.00	5.00	6.78	2.56
	CI-SB1	0.34	0.34					0.90	0.30	3.29	10.00	5.00	6.78	2.05
NCC	CI-NCC18	0.44	0.05	0.37			0.03	0.82	0.36	5.43	10.00	5.00	6.78	2.46
	GI-NCC1B	2.76		2.77				0.85	2.35	9.32	10.00	5.00	6.78	15.89
	CI-NCC17	0.41	0.06	0.34			0.01	0.84	0.34	5.37	10.00	5.00	6.78	2.33
	CI-NCC16	0.43	0.06	0.36			0.01	0.84	0.36	5.57	10.00	5.00	6.78	2.44
	CI-NCC15	0.46	0.06	0.37			0.04	0.80	0.37	5.46	10.00	5.00	6.78	2.52
	CI-NCC14	0.48	0.05	0.39			0.04	0.80	0.38	6.38	10.00	5.00	6.78	2.60
	CI-NCC13	0.45	0.06	0.38			0.01	0.84	0.38	5.59	10.00	5.00	6.78	2.56
	CI-NCC12	0.91	0.11	0.68			0.12	0.76	0.70	7.79	10.00	5.00	6.78	4.71
	CI-NCC11	0.77	0.11	0.65			0.02	0.84	0.65	8.32	10.00	5.00	6.78	4.40
	CI-NCC10	0.87	0.11	0.74			0.02	0.84	0.73	8.07	10.00	5.00	6.78	4.95
	CI-NCC9	0.72	0.22	0.46			0.03	0.84	0.60	8.40	10.00	5.00	6.78	4.06
	CI-NCC8	0.64	0.13	0.51				0.86	0.55	3.65	10.00	5.00	6.78	3.74
	GI-NCC1A	0.94		0.94				0.85	0.80	7.29	10.00	5.00	6.78	5.44
	CI-NCC7	0.68	0.13	0.55				0.86	0.58	3.33	10.00	5.00	6.78	3.96
	CI-NCC6	0.75	0.75	0.63			0.00	0.86	0.64	3.24	10.00	5.00	6.78	4.35
	CI-NCC5	0.67	0.67	0.53			0.00	0.85	0.57	3.24	10.00	5.00	6.78	3.83
	CI-NCC4	0.43	0.43	0.32			0.00	0.85	0.37	2.24	10.00	5.00	6.78	2.48
	CI-NCC3	0.43	0.43	0.32			0.00	0.85	0.37	2.56	10.00	5.00	6.78	2.48
	CI-NCC2	0.52	0.52	0.37			0.00	0.83	0.43	2.37	10.00	5.00	6.78	2.93
	CI-NCC1	0.47	0.47	0.33			0.00	0.83	0.39	2.37	10.00	5.00	6.78	2.63
SCC	CI-SCC8	0.27	0.22				0.06	0.74	0.20	3.19	10.00	5.00	6.78	1.37
	CI-SCC7	0.29	0.25				0.04	0.79	0.23	2.01	10.00	5.00	6.78	1.54
	CI-SCC6	0.26	0.22				0.04	0.78	0.20	2.31	10.00	5.00	6.78	1.37
	CI-SCC5	0.26	0.22				0.04	0.79	0.20	2.15	10.00	5.00	6.78	1.38
	CI-SCC4	0.26	0.23				0.03	0.82	0.21	2.15	10.00	5.00	6.78	1.43
	CI-SCC3	0.24	0.22				0.02	0.83	0.20	2.21	10.00	5.00	6.78	1.35
	CI-SCC2	0.24	0.24					0.90	0.22	3.13	10.00	5.00	6.78	1.46
	CI-SCC1	0.31	0.31					0.90	0.28	3.04	10.00	5.00	6.78	1.91

STATE OF TEXAS
NICHOLAS VON SPENCER
93702
LICENSED
PROFESSIONAL ENGINEER

Signature of Registrant , P.E. & Date 5-25-11

Texas Department of Transportation
© 2011

STORM SEWER HYDRAULIC DATA SHEET

SHEET 1 OF 19

DESIGN	FED. RD. DIV. NO.	STATE PROJECT NO.		HIGHWAY NO.
AMW	6	(SEE TITLE SHEET)		SH 289
GRAPHICS AMW	STATE	DISTRICT	COUNTY	SHEET NO.
CHECK NVS	TEXAS	DALLAS	COLLIN	266
CHECK	CONTROL	SECTION	JOB	
NVS	0091	04	055	

T:\DALDGN*A\SH 289 Celina\THE PLANS\Drainage Storm Sewer\Drainage Computation Sheets\hydraulicdatasheets.dgn 4/7/2011 2:23:23 PM

RUNOFF COMPUTATIONS

NW ID	Area ID	Acres-Drained: Total Area (acre)	Pav. C = 0.90 (acre)	Comm. C=0.85 (acre)	ROW C = 0.70 (acre)	Res. C = 0.50 (acre)	Grass C = 0.15 (acre)	C Value (Comp.)	Time of Conc: Total CA	Actual (min)	Design (min)	Freq. (yr)	I (in/hr)	Q (cfs)
NC	CI-NC13	0.44	0.36				0.08	0.76	0.34	3.77	10.00	5.00	6.78	2.29
	CI-NC12	0.18	0.16				0.02	0.82	0.14	2.24	10.00	5.00	6.78	0.97
	CI-NC11	0.43	0.23		0.20			0.81	0.35	3.77	10.00	5.00	6.78	2.36
	GI-NC4	1.93		1.93				0.85	1.64	6.45	10.00	5.00	6.78	11.09
	CI-NC10	0.26	0.26					0.90	0.23	3.07	10.00	5.00	6.78	1.57
	GI-NC3	0.49		0.49				0.85	0.41	6.33	10.00	5.00	6.78	2.80
	CI-NC9	0.73	0.43	0.31				0.88	0.64	8.42	10.00	5.00	6.78	4.36
	CI-NC8	0.62	0.11	0.28	0.05		0.18	0.65	0.40	8.96	10.00	5.00	6.78	2.72
	CI-NC7	0.43	0.10	0.32			0.01	0.75	0.32	7.96	10.00	5.00	6.78	2.19
	GI-NC2	0.50	0.07	0.41			0.02	0.83	0.41	6.58	10.00	5.00	6.78	2.79
	CI-NC6	0.72	0.08	0.18	0.14		0.32	0.52	0.37	7.53	10.00	5.00	6.78	2.52
	CI-NC5	0.72	0.08	0.18	0.14		0.32	0.52	0.37	7.54	10.00	5.00	6.78	2.52
	CI-NC4	0.78	0.10	0.21	0.14		0.33	0.53	0.41	6.47	10.00	5.00	6.78	2.81
	CI-NC3	0.52	0.07	0.16	0.09		0.21	0.55	0.28	5.38	10.00	5.00	6.78	1.93
	GI-NC1	0.49	0.49	0.29	0.09		0.00	0.81	0.40	12.33	12.33	5.00	6.19	2.47
	CI-NC2	0.44	0.44	0.36			0.00	0.84	0.37	6.02	10.00	5.00	6.78	2.49
	CI-NC1	0.46	0.46	0.18	0.05		0.00	0.60	0.27	5.02	10.00	5.00	6.78	1.85
SC	CI-SC8	0.39	0.36				0.02	0.86	0.33	3.29	10.00	5.00	6.78	2.24
	CI-SC7	0.25	0.25					0.90	0.22	2.86	10.00	5.00	6.78	1.50
	CI-SC6	0.24	0.24					0.90	0.21	3.32	10.00	5.00	6.78	1.45
	CI-SC5	0.35	0.32				0.03	0.83	0.29	4.42	10.00	5.00	6.78	1.98
	CI-SC4	0.42	0.36				0.06	0.79	0.33	2.82	10.00	5.00	6.78	2.24
	CI-SC3	0.26	0.22				0.04	0.78	0.20	2.87	10.00	5.00	6.78	1.37
	CI-SC2	0.25	0.21				0.04	0.78	0.20	2.78	10.00	5.00	6.78	1.33
	CI-SC1	0.31	0.26				0.05	0.78	0.24	3.28	10.00	5.00	6.78	1.66
ND	CI-ND14	0.39	0.36				0.02	0.86	0.33	3.42	10.00	5.00	6.78	2.24
	CI-ND13	0.23	0.23					0.90	0.21	2.93	10.00	5.00	6.78	1.42
	GI-ND1A	2.06		2.06				0.85	1.75	28.63	28.63	5.00	3.96	6.94
	CI-ND12	0.40	0.29	0.11				0.89	0.35	2.12	10.00	5.00	6.78	2.38
	CI-ND11	0.35	0.13	0.20			0.02	0.82	0.29	1.37	10.00	5.00	6.78	1.94
	GI-ND1B	3.97		1.99	1.99			0.78	3.08	24.03	24.03	5.00	4.38	13.50
	CI-ND10	0.60	0.13	0.45			0.03	0.83	0.50	4.44	10.00	5.00	6.78	3.40
	CI-ND9	0.73	0.11	0.60			0.02	0.84	0.61	5.38	10.00	5.00	6.78	4.12
	CI-ND8	0.51	0.05	0.44			0.01	0.84	0.43	6.15	10.00	5.00	6.78	2.90
	CI-ND7	0.56	0.09	0.45			0.02	0.84	0.46	6.12	10.00	5.00	6.78	3.15
	CI-ND6	0.50	0.09	0.39			0.02	0.83	0.42	6.30	10.00	5.00	6.78	2.83
	CI-ND5	0.61	0.14	0.45			0.03	0.83	0.51	7.40	10.00	5.00	6.78	3.46
	CI-ND4	0.46	0.13	0.30			0.03	0.83	0.38	8.12	10.00	5.00	6.78	2.55
	CI-ND3	0.30	0.11	0.17			0.02	0.82	0.25	5.05	10.00	5.00	6.78	1.69
	CI-ND2	0.31	0.31	0.18			0.00	0.82	0.26	4.08	10.00	5.00	6.78	1.73
	CI-ND1	0.45	0.45	0.31			0.00	0.83	0.37	3.95	10.00	5.00	6.78	2.53
	CI-ND0	0.75	0.75	0.20	0.22		0.00	0.61	0.46	4.67	10.00	5.00	6.78	3.10
SD	CI-SD0	0.41	0.39				0.02	0.87	0.35	3.42	10.00	5.00	6.78	2.40
	CI-SD1	0.39	0.39					0.90	0.35	2.93	10.00	5.00	6.78	2.35
	CI-SD2	0.37	0.32				0.05	0.79	0.29	2.25	10.00	5.00	6.78	1.97
	CI-SD3	0.31	0.26				0.05	0.78	0.24	2.40	10.00	5.00	6.78	1.64
	CI-SD4	0.22	0.19				0.03	0.79	0.17	1.75	10.00	5.00	6.78	1.16
	CI-SD5	0.23	0.20				0.04	0.79	0.18	1.80	10.00	5.00	6.78	1.23
	CI-SD6	0.32	0.27				0.05	0.78	0.25	2.43	10.00	5.00	6.78	1.69
	CI-SD7	0.28	0.23				0.04	0.79	0.22	2.06	10.00	5.00	6.78	1.47
	CI-SD8	0.28	0.23				0.05	0.78	0.22	2.52	10.00	5.00	6.78	1.47
NGG	CI-NGG1	0.53				0.08		0.78	0.41	2.47	10.00	5.00	6.78	2.80
	CI-NGG2	0.39				0.06		0.78	0.30	3.05	10.00	5.00	6.78	2.04
	CI-NGG3	0.38				0.06		0.78	0.30	4.31	10.00	5.00	6.78	2.02
	CI-NGG4	0.39				0.01		0.88	0.34	4.18	10.00	5.00	6.78	2.30
	CI-NGG5	0.18						0.90	0.16	1.16	10.00	5.00	6.78	1.10
	CI-NGG6	0.39						0.90	0.35	1.15	10.00	5.00	6.78	2.37
	GI-NGG1A	5.95	2.98			2.98	0.90	0.50	2.98	40.68	40.68	5.00	3.18	9.47

STATE OF TEXAS
NICHOLAS VON SPENCER
93702
LICENSED PROFESSIONAL ENGINEER

Nicholas V Spencer, P.E. 4-7-11
Signature of Registrant & Date

Texas Department of Transportation
© 2011

STORM SEWER HYDRAULIC DATA SHEET

SHEET 2 OF 19

DESIGN	FED. RD. DIV. NO.	STATE PROJECT NO.		HIGHWAY NO.
AMW	6	(SEE TITLE SHEET)		SH 289
GRAPHICS AMW	STATE	DISTRICT	COUNTY	SHEET NO.
CHECK NVS	TEXAS	DALLAS	COLLIN	267
CHECK NVS	CONTROL 0091	SECTION 04	JOB 055	

RUNOFF COMPUTATIONS

NW ID	Area ID	Acres-Drained: Total Area (acre)	Pav. C = 0.90 (acre)	Comm. C=0.85 (acre)	ROW C = 0.70 (acre)	Res. C = 0.50 (acre)	Grass C = 0.15 (acre)	C Value (Comp.)	Time of Conc: Total CA	Actual (min)	Design (min)	Freq. (yr)	I (in/hr)	Q (cfs)
SGG	CI-SGG1	0.52	0.43				0.08	0.78	0.40	1.61	10.00	5.00	6.78	2.73
	CI-SGG2	0.39	0.33				0.06	0.78	0.30	4.34	10.00	5.00	6.78	2.06
	CI-SGG3	0.39	0.33				0.06	0.78	0.30	4.38	10.00	5.00	6.78	2.05
	CI-SGG4	0.39	0.34				0.05	0.81	0.31	4.37	10.00	5.00	6.78	2.12
	CI-SGG5	0.19	0.17				0.02	0.82	0.15	2.18	10.00	5.00	6.78	1.03
	CI-SGG6	0.35	0.35					0.90	0.31	1.44	10.00	5.00	6.78	2.13
NG	GI-NG1C	4.19		4.19				0.85	3.56	34.45	34.45	5.00	3.54	12.59
	CI-NG1	0.20	0.17				0.03	0.78	0.16	2.83	10.00	5.00	6.78	1.05
	GI-NG1A	2.24		2.24				0.85	1.91	35.58	35.58	5.00	3.47	6.61
SG	CI-SG1	0.21	0.17				0.03	0.78	0.16	2.71	10.00	5.00	6.78	1.09
NHH	CI-NHH3	0.26	0.22				0.04	0.78	0.20	10.00	10.00	5.00	6.78	1.36
	CI-NHH2	0.26	0.22				0.04	0.78	0.20	10.00	10.00	5.00	6.78	1.36
	CI-NHH1	0.19	0.16				0.03	0.78	0.15	10.00	10.00	5.00	6.78	0.99
SHH	CI-SHH3	0.26	0.22				0.04	0.78	0.20	3.16	10.00	5.00	6.78	1.36
	CI-SHH2	0.26	0.22				0.04	0.78	0.20	3.18	10.00	5.00	6.78	1.36
	CI-SHH1	0.19	0.16				0.03	0.78	0.15	2.76	10.00	5.00	6.78	0.99
NH	CI-NH10	0.45	0.38				0.07	0.78	0.35	3.02	10.00	5.00	6.78	2.38
	CI-NH9	0.39	0.32				0.06	0.78	0.30	4.42	10.00	5.00	6.78	2.04
	CI-NH8	0.39	0.32		0.01		0.06	0.78	0.30	4.30	10.00	5.00	6.78	2.06
	CI-NH7	0.33	0.19		0.11		0.04	0.75	0.25	2.78	10.00	5.00	6.78	1.71
	CI-NH6	0.51	0.25		0.21		0.05	0.75	0.38	3.48	10.00	5.00	6.78	2.57
	CI-NH5	0.49	0.24		0.22		0.03	0.76	0.37	3.46	10.00	5.00	6.78	2.54
	CI-NH4	0.28	0.26				0.03	0.83	0.24	10.00	10.00	5.00	6.78	1.60
	GI-NH3	4.49					4.49	0.15	0.67	8.53	10.00	5.00	6.78	4.56
	GI-NH2	4.47					4.47	0.15	0.67	7.80	10.00	5.00	6.78	4.54
	GI-NH1	4.11					4.11	0.15	0.62	7.06	10.00	5.00	6.78	4.18
SH	CI-SH6	0.45	0.38				0.07	0.78	0.35	3.03	10.00	5.00	6.78	2.38
	CI-SH5	0.39	0.32				0.06	0.78	0.30	4.41	10.00	5.00	6.78	2.04
	CI-SH4	0.39	0.32				0.06	0.78	0.30	4.43	10.00	5.00	6.78	2.04
	CI-SH3	0.39	0.32				0.06	0.78	0.30	4.41	10.00	5.00	6.78	2.04
	CI-SH2	0.39	0.36				0.02	0.86	0.33	4.29	10.00	5.00	6.78	2.24
	CI-SH1	0.32	0.32					0.90	0.28	3.81	10.00	5.00	6.78	1.93
NJJ	CI-NJJ10	0.48	0.32		0.09		0.06	0.76	0.37	4.22	10.00	5.00	6.78	2.48
	CI-NJJ9	0.39	0.32				0.06	0.78	0.30	4.25	10.00	5.00	6.78	2.04
	CI-NJJ8	0.39	0.33				0.06	0.78	0.30	4.20	10.00	5.00	6.78	2.05
	CI-NJJ7	0.26	0.26				0.00	0.89	0.23	2.95	10.00	5.00	6.78	1.56
	CI-NJJ6	0.26	0.26					0.90	0.23	2.90	10.00	5.00	6.78	1.57
	CI-NJJ5	0.29	0.29					0.90	0.26	1.37	10.00	5.00	6.78	1.79
	GI-NJJ2	0.75	0.38			0.38		0.70	0.53	13.65	13.65	5.00	5.90	3.11
	GI-NJJ1	1.40	0.42			0.98		0.62	0.87	13.33	13.33	5.00	5.97	5.19
SJJ	CI-SJJ5	0.39	0.32				0.06	0.78	0.30	4.20	10.00	5.00	6.78	2.04
	CI-SJJ4	0.39	0.32				0.06	0.78	0.30	4.25	10.00	5.00	6.78	2.04
	CI-SJJ3	0.39	0.32				0.06	0.78	0.30	4.22	10.00	5.00	6.78	2.04
	CI-SJJ2	0.39	0.34				0.04	0.82	0.31	4.24	10.00	5.00	6.78	2.13
	CI-SJJ1	0.39	0.38				0.01	0.87	0.34	3.57	10.00	5.00	6.78	2.33
NJ	CI-NJ11	0.39	0.32				0.06	0.78	0.30	2.52	10.00	5.00	6.78	2.04
	CI-NJ10	0.35	0.30				0.06	0.78	0.28	3.80	10.00	5.00	6.78	1.87
	CI-NJ9	0.29	0.24				0.05	0.78	0.23	3.20	10.00	5.00	6.78	1.53
	CI-NJ8	0.62	0.38		0.19		0.05	0.78	0.48	3.41	10.00	5.00	6.78	3.27
	CI-NJ7	0.64	0.55		0.09		0.01	0.87	0.56	2.42	10.00	5.00	6.78	3.77
	GI-NJ6	0.13			0.13			0.70	0.09	5.57	10.00	5.00	6.78	0.61
	CI-NJ5	0.34	0.19		0.14			0.82	0.27	1.57	10.00	5.00	6.78	1.86
	CI-NJ4	0.79	0.19		0.27	0.33	0.01	0.66	0.52	8.41	10.00	5.00	6.78	3.55
	CI-NJ3	0.57	0.14		0.21	0.20	0.03	0.65	0.37	6.76	10.00	5.00	6.78	2.53
	CI-NJ2	0.64	0.13		0.24	0.25	0.02	0.64	0.41	6.76	10.00	5.00	6.78	2.77
	CI-NJ1	1.01	0.19		0.38	0.40	0.03	0.64	0.65	7.92	10.00	5.00	6.78	4.37

STATE OF TEXAS
NICHOLAS VON SPENCER
93702
LICENSED PROFESSIONAL ENGINEER

Signature of Registrant , P.E. & Date 4-7-11

Texas Department of Transportation
© 2011

STORM SEWER HYDRAULIC DATA SHEET

SHEET 3 OF 19

DESIGN	FED. RD. DIV. NO.	STATE PROJECT NO.			HIGHWAY NO.
AMW	6	(SEE TITLE SHEET)			SH 289
GRAPHICS AMW	STATE	DISTRICT	COUNTY		SHEET NO.
CHECK NVS	TEXAS	DALLAS	COLLIN		268
CHECK NVS	CONTROL 0091	SECTION 04	JOB 055		

T:\DALDGN*A\SH 289 Collin\THE PLANS\Drainage Storm Sewer\Drainage Computation Sheets\hydraulicdatasheets.dgn 4/7/2011 2:23:30 PM

RUNOFF COMPUTATIONS

NW ID	Area ID	Acres-Drained: Total Area (acre)	Pav. C = 0.90 (acre)	Comm. C=0.85 (acre)	ROW C = 0.70 (acre)	Res. C = 0.50 (acre)	Grass C = 0.15 (acre)	C Value (Comp.)	Time of Conc: Total CA	Actual (min)	Design (min)	Freq. (yr)	I (in/hr)	Q (cfs)
SJ	CI-SJ8	0.39	0.32				0.06	0.78	0.30	2.63	10.00	5.00	6.78	2.04
	CI-SJ7	0.26	0.22				0.04	0.78	0.20	2.88	10.00	5.00	6.78	1.36
	CI-SJ6	0.39	0.33				0.06	0.79	0.31	4.21	10.00	5.00	6.78	2.07
	CI-SJ5	0.41	0.41				0.02	0.90	0.37	3.24	10.00	5.00	6.78	2.48
	CI-SJ4	0.39	0.37				0.02	0.87	0.34	2.37	10.00	5.00	6.78	2.29
	CI-SJ3	0.39	0.34				0.05	0.81	0.31	2.36	10.00	5.00	6.78	2.12
	CI-SJ2	0.35	0.26		0.04		0.05	0.78	0.27	2.18	10.00	5.00	6.78	1.81
	CI-SJ1	0.34	0.19		0.11		0.03	0.76	0.26	2.71	10.00	5.00	6.78	1.73
NKK	CI-NKK10	0.64	0.44		0.14		0.06	0.79	0.50	2.18	10.00	5.00	6.78	3.40
	CI-NKK9	0.26	0.16		0.06	0.36	0.03	0.76	0.20	1.94	10.00	5.00	6.78	1.32
	CI-NKK8	0.73	0.17		0.16	0.36	0.04	0.62	0.45	7.58	10.00	5.00	6.78	3.07
	CI-NKK7	0.83	0.18		0.18	0.45	0.04	0.61	0.51	6.42	10.00	5.00	6.78	3.45
	CI-NKK6	0.88	0.16		0.20	0.50	0.03	0.60	0.53	9.55	10.00	5.00	6.78	3.60
	CI-NKK5	0.64	0.13		0.14	0.34	0.03	0.62	0.39	6.91	10.00	5.00	6.78	2.64
	CI-NKK4	0.65	0.16		0.16	0.29	0.03	0.63	0.41	7.01	10.00	5.00	6.78	2.77
	CI-NKK3	0.63	0.16		0.20	0.24	0.03	0.65	0.41	6.25	10.00	5.00	6.78	2.76
	CI-NKK2	0.71	0.15		0.28	0.25	0.03	0.65	0.46	7.67	10.00	5.00	6.78	3.13
	CI-NKK1	0.84	0.17		0.35	0.30	0.03	0.65	0.55	9.17	10.00	5.00	6.78	3.71
SKK	CI-SKK6	0.56	0.56				0.00	0.90	0.50	2.83	10.00	5.00	6.78	3.41
	CI-SKK5	0.40	0.33				0.07	0.78	0.31	4.19	10.00	5.00	6.78	2.09
	CI-SKK4	0.43	0.31		0.06		0.06	0.76	0.32	2.37	10.00	5.00	6.78	2.20
	CI-SKK3	0.53	0.32		0.15		0.06	0.76	0.40	2.28	10.00	5.00	6.78	2.74
	CI-SKK2	0.73	0.33		0.34		0.06	0.75	0.54	2.41	10.00	5.00	6.78	3.67
	CI-SKK1	0.37	0.17		0.17		0.03	0.75	0.27	2.07	10.00	5.00	6.78	1.86
NK	CI-NK5	0.38	0.32		0.06		0.00	0.86	0.33	2.16	10.00	5.00	6.78	2.23
	GI-NK3B	7.75					7.75	0.15	1.16	20.56	20.56	5.00	4.78	5.56
	CI-NK2	0.41	0.31		0.10			0.85	0.35	2.44	10.00	5.00	6.78	2.35
	GI-NK4	0.84	0.29		0.54			0.77	0.65	11.49	11.49	5.00	6.38	4.12
	GI-NK4A	0.73	0.28		0.45			0.78	0.56	9.92	10.00	5.00	6.78	3.82
	GI-NK3A	6.63					6.63	0.15	0.99	27.14	27.14	5.00	4.09	4.06
	CI-NK1	0.36	0.19		0.16		0.01	0.80	0.28	5.07	10.00	5.00	6.78	1.92
SK	CI-SK3	0.19	0.18				0.01	0.88	0.17	1.76	10.00	5.00	6.78	1.13
	CI-SK2	0.31	0.28				0.03	0.82	0.25	2.44	10.00	5.00	6.78	1.72
	CI-SK1	0.25	0.17		0.06		0.03	0.78	0.20	2.47	10.00	5.00	6.78	1.34
NLL	CI-NLL6	0.46	0.39				0.07	0.78	0.36	3.08	10.00	5.00	6.78	2.45
	CI-NLL5	0.40	0.33				0.07	0.77	0.31	3.06	10.00	5.00	6.78	2.10
	CI-NLL4	0.38	0.32				0.06	0.78	0.30	2.78	10.00	5.00	6.78	2.03
	CI-NLL3	0.47	0.32		0.06		0.09	0.74	0.35	2.78	10.00	5.00	6.78	2.36
	CI-NLL2	0.76	0.32		0.38		0.06	0.74	0.56	3.15	10.00	5.00	6.78	3.80
	CI-NLL1	0.41	0.16		0.22		0.03	0.74	0.30	2.68	10.00	5.00	6.78	2.05
SLL	CI-SLL6	0.46	0.39				0.07	0.78	0.36	3.07	10.00	5.00	6.78	2.45
	CI-SLL5	0.40	0.33				0.07	0.77	0.31	3.03	10.00	5.00	6.78	2.10
	CI-SLL4	0.38	0.32				0.06	0.78	0.30	2.79	10.00	5.00	6.78	2.03
	CI-SLL3	0.39	0.32				0.06	0.78	0.30	2.78	10.00	5.00	6.78	2.03
	CI-SLL2	0.59	0.32		0.22		0.06	0.75	0.44	2.76	10.00	5.00	6.78	3.01
	CI-SLL1	0.32	0.16		0.13		0.03	0.75	0.24	2.37	10.00	5.00	6.78	1.61

STATE OF TEXAS
NICHOLAS VON SPENCER
93702
LICENSED PROFESSIONAL ENGINEER

Nicholas V Spencer, P.E. 4-7-11
Signature of Registrant & Date

Texas Department of Transportation
© 2011

STORM SEWER HYDRAULIC DATA SHEET

SHEET 4 OF 19

DESIGN	FED. RD. DIV. NO.	STATE PROJECT NO.		HIGHWAY NO.
AMW	6	(SEE TITLE SHEET)		SH 289
GRAPHICS	STATE	DISTRICT	COUNTY	SHEET NO.
AMW	TEXAS	DALLAS	COLLIN	269
CHECK	CONTROL	SECTION	JOB	
NVS	0091	04	055	
CHECK NVS				

T:\DALDGN#A\SH 289 Celina\THE PLANS\Drainage Storm Sewer\Drainage Computation Sheets\hydraulicdatasheets.dgn 4/7/2011 2:23:34 PM

RUNOFF COMPUTATIONS

NW ID	Area ID	Acres-Drained: Total Area (acre)	Pav. C = 0.90 (acre)	Comm. C=0.85 (acre)	ROW C = 0.70 (acre)	Res. C = 0.50 (acre)	Grass C = 0.15 (acre)	C Value (Comp.)	Time of Conc: Total CA	Actual (min)	Design (min)	Freq. (yr)	I (in/hr)	Q (cfs)
NL	CI-NL4	0.24	0.20				0.04	0.77	0.19	3.00	10.00	5.00	6.78	1.28
	CI-NL3	0.42	0.29		0.08		0.06	0.77	0.32	4.58	10.00	5.00	6.78	2.19
	CI-NL2	0.35	0.29				0.06	0.78	0.27	4.20	10.00	5.00	6.78	1.83
	CI-NL1	0.39	0.32				0.06	0.78	0.30	3.28	10.00	5.00	6.78	2.02
SL	CI-SL4	0.24	0.20				0.04	0.77	0.19	3.08	10.00	5.00	6.78	1.28
	CI-SL3	0.39	0.32				0.06	0.78	0.30	4.63	10.00	5.00	6.78	2.04
	CI-SL2	0.35	0.29				0.06	0.78	0.27	4.20	10.00	5.00	6.78	1.83
	CI-SL1	0.28	0.24				0.05	0.78	0.22	2.89	10.00	5.00	6.78	1.50
NM	CI-NM5	0.40	0.34				0.07	0.77	0.31	2.19	10.00	5.00	6.78	2.11
	CI-NM4	0.39	0.33				0.06	0.78	0.30	1.91	10.00	5.00	6.78	2.04
	CI-NM3	0.37	0.30		0.01		0.06	0.78	0.28	1.85	10.00	5.00	6.78	1.93
	CI-NM2	0.41	0.24		0.13		0.04	0.76	0.31	1.62	10.00	5.00	6.78	2.11
	CI-NM1	0.58	0.34		0.18		0.06	0.76	0.44	1.75	10.00	5.00	6.78	2.99
SM	CI-SM6	0.23	0.19				0.04	0.77	0.18	1.69	10.00	5.00	6.78	1.21
	CI-SM5	0.37	0.28		0.04		0.06	0.77	0.28	1.80	10.00	5.00	6.78	1.91
	CI-SM4	0.58	0.34		0.18		0.07	0.75	0.44	1.90	10.00	5.00	6.78	2.96
	CI-SM3	0.64	0.34		0.24		0.06	0.75	0.48	1.90	10.00	5.00	6.78	3.24
	CI-SM2	0.61	0.30		0.26		0.05	0.75	0.46	1.82	10.00	5.00	6.78	3.10
	CI-SM1	0.27	0.23				0.04	0.79	0.21	1.30	10.00	5.00	6.78	1.44
CELINA	CI-CELINA SC LTD	1.10	0.82		0.06		0.23	0.73	0.81	14.66	14.66	5.00	5.70	4.62
	GI-CELINA SC LTD	0.33			0.03		0.30	0.20	0.06	6.32	10.00	5.00	6.78	0.44

STATE OF TEXAS
NICHOLAS VON SPENCER
93702
LICENSED
PROFESSIONAL ENGINEER

Signature of Registrant & Date, P.E. 4-7-11

Texas Department of Transportation
© 2011

STORM SEWER HYDRAULIC DATA SHEET

SHEET 5 OF 19

DESIGN	FED. RD. DIV. NO.	STATE PROJECT NO.		HIGHWAY NO.
AMW	6	(SEE TITLE SHEET)		SH 289
GRAPHICS AMW	STATE	DISTRICT	COUNTY	SHEET NO.
CHECK NVS	TEXAS	DALLAS	COLLIN	270
CHECK NVS	CONTROL 0091	SECTION 04	JOB 055	

T:\DALDGN#A\SH 289 Celina\THE PLANS\Drainage Storm Sewer\Drainage Computation Sheets\hydraulicdatasheets.dgn 5/22/2011 9:43:36 AM

INLET COMPUTATIONS

NW ID	Inlet ID	Drainage Area ID	Inlet Station	Inlet Offset (ft)		Inlet Type	Profile Type	Comp X-Sect Spread S (%)	Curb Dep (ft)	Curb Height (ft)	Curb Dep Width (ft)	Total Discharge (cfs)	Capacity (cfs)	By Pass Flow (cfs)	By Pass Flow into Node	Inlet Length Actual (ft)	CURB INLET ON GRADE: Long Slope On Grade (%)	Inlet Length Required (ft)	Comp Ponded Width (ft)	Comp Ponded Depth (ft)	Allowable Ponded Width (ft)
NBB	CI-NBB1	CI-NBB1	308+00.00	59.00	L	Curb	On Grade	0.02	0.33	0.33	2.00	3.42	3.42			15.00	0.87	10.80	11.49	0.23	12.00
	CI-NBB2	CI-NBB2	306+00.00	59.00	L	Curb	On Grade	0.02	0.33	0.33	2.00	2.78	2.78			15.00	2.12	11.97	8.98	0.18	12.00
	GI-NBB1	GI-NBB1	305+28.32	77.46	L	Grate	Sag	0.04				0.20	4.16						1.46	0.05	
	GI-NBB2	GI-NBB2	304+00.45	82.15	L	Grate	Sag	0.02				27.10	8.04						41.57	0.94	
SBB	CI-SBB2	CI-SBB2	307+89.35	47.00	R	Curb	On Grade	0.02	0.33	0.33	2.00	0.56	0.56			15.00	0.93	4.36	5.74	0.12	12.00
	CI-SBB1	CI-SBB1	307+17.00	47.00	R	Curb	On Grade	0.02	0.33	0.33	2.00	3.72	3.72			15.00	1.39	12.62	10.85	0.22	12.00
	CI-SBB0	CI-SBB0	304+76.42	59.00	R	Curb	On Grade	0.02	0.33	0.33	2.00	0.99	0.99			15.00	2.36	7.37	5.97	0.12	12.00
	GI-SBB1	GI-SBB1	305+13.88	100.09	R	Grate	Sag	0.02				11.54	8.04						23.53	0.53	
NB	CI-NB15	CI-NB15	309+37.54	51.93	L	Curb	Sag	0.02	0.33	0.33	2.00	1.82	11.52			15.00		7.74	6.09	0.12	12.00
	CI-NB11	CI-NB11	309+86.00	47.00	L	Curb	On Grade	0.02	0.33	0.33	2.00	2.19	2.19			15.00	0.30	6.60	11.82	0.24	12.00
	CI-NB10	CI-NB10	310+98.09	47.00	L	Curb	On Grade	0.02	0.33	0.33	2.00	3.54	3.54			15.00	1.01	11.40	11.31	0.23	12.00
	CI-NB9	CI-NB9	312+36.00	47.00	L	Curb	On Grade	0.02	0.33	0.33	2.00	3.27	3.27			15.00	1.87	12.65	9.77	0.20	12.00
	CI-NB8	CI-NB8	313+48.00	47.00	L	Curb	On Grade	0.02	0.33	0.33	2.00	2.95	2.95			15.00	2.58	12.97	8.86	0.18	12.00
	CI-NB7	CI-NB7	314+60.00	47.00	L	Curb	On Grade	0.02	0.33	0.33	2.00	3.81	3.81			15.00	2.58	14.83	9.74	0.20	12.00
	CI-CR 98	CI-NB6	315+36.55	123.72	L	Curb	On Grade	0.02	0.33	0.33	2.00	5.00	3.96	1.040	CI-NB7	10.00	2.58	17.18	10.79	0.22	12.00
	CI-NB6	GI-NB1	316+82.00	47.00	L	Curb	On Grade	0.02	0.33	0.33	2.00	4.29	4.27	0.020	CI-NB7	15.00	2.58	15.81	10.19	0.20	12.00
	GI-NB1	CI-NB5	316+53.97	76.47	L	Grate	Sag	0.03				7.83	8.04						15.34	0.41	12.00
	CI-NB5		317+32.00	47.00	L	Curb	On Grade	0.02	0.33	0.33	2.00	2.73	2.73			15.00	2.58	12.45	8.60	0.17	12.00
	CI-NB4	CI-NB4	317+82.00	47.00	L	Curb	On Grade	0.02	0.33	0.33	2.00	2.48	2.48			15.00	2.51	11.77	8.34	0.17	12.00
	CI-NB3	CI-NB3	318+32.00	47.00	L	Curb	On Grade	0.02	0.33	0.33	2.00	2.19	2.19			15.00	2.21	10.70	8.16	0.16	12.00
	CI-NB2	CI-NB2	318+77.00	47.50	L	Curb	On Grade	0.02	0.33	0.33	2.00	2.80	2.80			15.00	1.93	11.73	9.17	0.18	12.00
	CI-NB1	CI-NB1	319+94.00	47.50	L	Curb	On Grade	0.02	0.33	0.33	2.00	3.33	3.33			15.00	1.21	11.51	10.68	0.21	12.00
SB	CI-SB6	CI-SB6	309+37.80	47.00	R	Curb	Sag	0.02	0.33	0.33	2.00	2.12	11.52			15.00		6.27	6.76	0.14	12.00
	CI-SB5	CI-SB5	311+36.00	47.00	R	Curb	On Grade	0.02	0.33	0.33	2.00	1.74	1.74			15.00	1.25	8.23	8.34	0.17	12.00
	CI-SB4	CI-SB4	313+48.00	47.00	R	Curb	On Grade	0.02	0.33	0.33	2.00	2.92	2.92			15.00	2.58	12.90	8.83	0.18	12.00
	CI-SB3	CI-SB3	316+52.70	47.00	R	Curb	On Grade	0.02	0.33	0.33	2.00	2.55	2.55			15.00	2.58	12.02	8.38	0.17	12.00
	CI-SB2	CI-SB2	318+05.00	47.00	R	Curb	On Grade	0.02	0.33	0.33	2.00	2.56	2.56			15.00	2.37	11.81	8.54	0.17	12.00
	CI-SB1	CI-SB1	320+00.00	47.00	R	Curb	On Grade	0.02	0.33	0.33	2.00	2.05	2.05			15.00	1.17	8.81	8.96	0.18	12.00
NCC	CI-NCC18	CI-NCC18	338+10.00	47.00	L	Curb	On Grade	0.02	0.33	0.33	2.00	2.46	2.46			15.00	0.40	7.51	11.71	0.23	12.00
	GI-NCC1B	GI-NCC1B	338+54.29	66.95	L	Grate	Sag	0.03				15.89	8.04						23.43	0.66	
	CI-NCC17	CI-NCC17	337+57.50	47.00	L	Curb	On Grade	0.02	0.33	0.33	2.00	2.33	2.33			15.00	0.40	7.30	11.49	0.23	12.00

NW ID	Inlet ID	CURB INLET IN SAG: Ponded Width Left (ft)	Ponded Width Right (ft)	Long Slope Left (%)	Long Slope Right (%)	n	DROP INLET: No. of Grates	Grate Length (ft)	Grate Width (ft)	Grate Area (ft2)	Grate Perimeter (ft2)	Grate Area Reduction	Grate Perimeter Reduction	Allowable Head (ft)
NBB	CI-NBB1					0.015								
	CI-NBB2					0.015								
	GI-NBB1	0.00	0.00	0.00	0.00	0.015	1	3.00	2.00	4.62	10.00	0.50	0.50	0.417
	GI-NBB2	0.00	0.00	0.00	0.00	0.015	1	7.67	2.00	11.19	19.33	0.50	0.50	0.417
SBB	CI-SBB2					0.015								
	CI-SBB1					0.015								
	CI-SBB0					0.015								
	GI-SBB1	0.00	0.00	0.00	0.00	0.015	1	7.67	2.00	11.19	19.33	0.50	0.50	0.417
NB	CI-NB15	9.28	9.06	0.20	0.21	0.015								
	CI-NB11					0.015								
	CI-NB10					0.015								
	CI-NB9					0.015								
	CI-NB8					0.015								
	CI-NB7					0.015								
	CI-CR 98					0.015								
	CI-NB6					0.015								
	GI-NB1	0.00	0.00	0.00	0.00	0.015	1	7.67	2.00	11.19	19.33	0.50	0.50	0.417
	CI-NB5					0.015								
	CI-NB4					0.015								
	CI-NB3					0.015								
	CI-NB2					0.015								
	CI-NB1					0.015								
SB	CI-SB6	9.83	9.61	0.20	0.21	0.015								
	CI-SB5					0.015								
	CI-SB4					0.015								
	CI-SB3					0.015								
	CI-SB2					0.015								
	CI-SB1					0.015								
NCC	CI-NCC18					0.015								
	GI-NCC1B	0.00	0.00	0.00	0.00	0.015	1	7.67	2.00	11.19	19.33	0.50	0.50	0.417
	CI-NCC17					0.015								

STATE OF TEXAS
NICHOLAS VON SPENCER
93702
LICENSED
PROFESSIONAL ENGINEER

Signature of Registrant , P.E. & Date 5-25-11

Texas Department of Transportation
© 2011

STORM SEWER HYDRAULIC DATA SHEET

SHEET 6 OF 19

DESIGN	FED. RD. DIV. NO.	STATE PROJECT NO.		HIGHWAY NO.
AMW	6	(SEE TITLE SHEET)		SH 289
GRAPHICS	STATE	DISTRICT	COUNTY	SHEET NO.
AMW	TEXAS	DALLAS	COLLIN	271
CHECK	CONTROL	SECTION	JOB	
NVS	0091	04	055	
CHECK NVS				

R-201104-01

T:\DALDGN*A\SH 289 Celina\THE PLANS\Drainage Storm Sewer\Drainage Computation Sheets\hydraulicdatasheets.dgn 5/22/2011 9:43:55 AM

INLET COMPUTATIONS

NW ID	Inlet ID	Drainage Area ID	Inlet Station	Inlet Offset (ft)	Inlet Type	Profile Type	Comp X-Sect Spread S (%)	Curb Dep (ft)	Curb Height (ft)	Curb Dep Width (ft)	Total Discharge (cfs)	Capacity (cfs)	By Pass Flow (cfs)	By Pass Flow into Node	Inlet Length Actual (ft)	CURB INLET ON GRADE: Long Slope On Grade (%)	Inlet Length Required (ft)	Comp Ponded Width (ft)	Comp Ponded Depth (ft)	Allowable Ponded Width (ft)
NCC (CONT.)	CI-NCC16	CI-NCC16	337+05.00	47.00 L	Curb	On Grade	0.02	0.33	0.33	2.00	2.44	2.44			15.00	0.40	7.48	11.68	0.23	12.00
	CI-NCC15	CI-NCC15	336+52.50	47.00 L	Curb	On Grade	0.02	0.33	0.33	2.00	2.52	2.52			15.00	0.40	7.62	11.83	0.24	12.00
	CI-NCC14	CI-NCC14	336+00.00	47.00 L	Curb	On Grade	0.02	0.33	0.33	2.00	2.60	2.60			15.00	0.70	8.82	10.78	0.22	12.00
	CI-NCC13	CI-NCC13	335+50.00	47.00 L	Curb	On Grade	0.02	0.33	0.33	2.00	2.56	2.56			15.00	1.01	9.55	10.02	0.20	12.00
	CI-NCC12	CI-NCC12	335+00.00	47.00 L	Curb	On Grade	0.02	0.33	0.33	2.00	4.72	4.72			15.00	1.32	14.22	11.97	0.24	12.00
	CI-NCC11	CI-NCC11	334+00.00	47.00 L	Curb	On Grade	0.02	0.33	0.33	2.00	4.52	4.52	0.002	CI-NCC12	15.00	1.94	15.20	10.96	0.22	12.00
	CI-NCC10	CI-NCC10	333+00.00	47.00 L	Curb	On Grade	0.02	0.33	0.33	2.00	4.99	4.87	0.117	CI-NCC11	15.00	2.56	17.13	10.80	0.22	12.00
	CI-NCC9	CI-NCC9	332+00.00	47.00 L	Curb	On Grade	0.02	0.33	0.33	2.00	4.09	4.05	0.038	CI-NCC10	15.00	3.18	16.20	9.62	0.19	12.00
	CI-NCC8	CI-NCC8	330+00.00	47.00 L	Curb	On Grade	0.02	0.33	0.33	2.00	3.79	3.77	0.023	CI-NCC9	15.00	3.47	15.92	9.20	0.18	12.00
	GI-NCC1A	GI-NCC1A	331+50.02	66.22 L	Grate	Sag	0.05				5.44	6.10						7.31	0.39	
	CI-NCC7	CI-NCC7	329+00.00	47.00 L	Curb	On Grade	0.02	0.33	0.33	2.00	4.03	3.98	0.050	CI-NCC8	15.00	3.47	16.43	9.41	0.19	12.00
	CI-NCC6	CI-NCC6	328+00.00	47.00 L	Curb	On Grade	0.02	0.33	0.33	2.00	4.35	4.28	0.068	CI-NCC7	15.00	3.10	16.65	9.90	0.20	12.00
	CI-NCC5	CI-NCC5	327+00.00	47.00 L	Curb	On Grade	0.02	0.33	0.33	2.00	3.83	3.83			15.00	2.47	14.72	9.85	0.20	12.00
	CI-NCC4	CI-NCC4	326+00.00	47.00 L	Curb	On Grade	0.02	0.33	0.33	2.00	2.48	2.48			15.00	1.84	10.88	8.84	0.18	12.00
	CI-NCC3	CI-NCC3	325+17.29	47.00 L	Curb	On Grade	0.02	0.33	0.33	2.00	2.48	2.48			15.00	1.47	10.28	9.22	0.18	12.00
	CI-NCC2	CI-NCC2	324+24.29	47.00 L	Curb	On Grade	0.02	0.33	0.33	2.00	2.93	2.93			15.00	1.44	11.19	9.85	0.20	12.00
	CI-NCC1	CI-NCC1	323+07.38	47.00 L	Curb	On Grade	0.02	0.33	0.33	2.00	2.63	2.63			15.00	0.72	8.94	10.77	0.22	12.00
SCC	CI-SCC8	CI-SCC8	338+10.00	47.00 R	Curb	On Grade	0.02	0.33	0.33	2.00	1.37	1.37			15.00	0.40	5.47	9.41	0.19	12.00
	CI-SCC7	CI-SCC7	336+00.00	47.00 R	Curb	On Grade	0.02	0.33	0.33	2.00	1.54	1.54			15.00	0.70	6.66	8.86	0.18	12.00
	CI-SCC6	CI-SCC6	334+00.00	47.00 R	Curb	On Grade	0.02	0.33	0.33	2.00	1.37	1.37			15.00	1.94	8.17	7.00	0.14	12.00
	CI-SCC5	CI-SCC5	332+00.00	47.00 R	Curb	On Grade	0.02	0.33	0.33	2.00	1.38	1.38			15.00	3.18	9.37	6.41	0.13	12.00
	CI-SCC4	CI-SCC4	330+00.00	47.00 R	Curb	On Grade	0.02	0.33	0.33	2.00	1.43	1.43			15.00	3.47	9.77	6.39	0.13	12.00
	CI-SCC3	CI-SCC3	328+00.00	47.00 R	Curb	On Grade	0.02	0.33	0.33	2.00	1.35	1.35			15.00	3.10	9.21	6.39	0.13	12.00
	CI-SCC2	CI-SCC2	326+10.00	47.00 R	Curb	On Grade	0.02	0.33	0.33	2.00	1.46	1.46			10.00	1.91	8.39	7.20	0.14	12.00
	CI-SCC1	CI-SCC1	324+24.29	47.00 R	Curb	On Grade	0.02	0.33	0.33	2.00	1.91	1.91			15.00	1.44	8.95	8.40	0.17	12.00
NC	CI-NC13	CI-NC13	340+50.70	47.00 L	Curb	Sag	0.02	0.33	0.33	2.00	2.29	11.52			15.00		2.25	7.10	0.14	12.00
	CI-NC12	CI-NC12	341+55.00	47.00 L	Curb	On Grade	0.02	0.33	0.33	2.00	0.97	0.97			15.00	0.55	4.95	7.79	0.16	12.00
	CI-NC11	CI-NC11	344+76.26	47.00 L	Curb	On Grade	0.02	0.33	0.33	2.00	2.36	2.36			15.00	0.35	7.10	11.87	0.24	12.00
	GI-NC4	GI-NC4	346+29.53	66.79 L	Grate	Sag	0.02				11.09	8.04						26.92	0.52	
	CI-NC10	CI-NC10	346+76.27	47.00 L	Curb	On Grade	0.02	0.33	0.33	2.00	1.57	1.57			15.00	0.35	5.67	10.19	0.20	12.00
	GI-NC3	GI-NC3	348+24.05	66.83 L	Grate	Sag	0.02				2.80	8.04						9.01	0.21	
	CI-NC9	CI-NC9	348+97.49	47.00 L	Curb	Sag	0.02	0.33	0.33	2.00	4.36	11.52			15.00		5.26	10.91	0.22	12.00
	CI-NC8	CI-NC8	349+70.42	47.00 L	Curb	On Grade	0.02	0.33	0.33	2.00	2.72	2.72			15.00	0.47	8.24	11.82	0.24	12.00
	CI-NC7	CI-NC7	350+75.00	47.00 L	Curb	On Grade	0.02	0.33	0.33	2.00	2.75	2.75			15.00	0.47	8.29	11.87	0.24	12.00
	GI-NC2	GI-NC2	351+79.44	57.62 L	Grate	On Grade	0.02				2.79	2.23	0.555	CI-NC7		0.47		11.93	0.24	12.00
	CI-NC6	CI-NC6	352+10.00	47.00 L	Curb	On Grade	0.02	0.33	0.33	2.00	2.52	2.52			15.00	0.47	7.90	11.49	0.23	12.00
	CI-NC5	CI-NC5	352+96.00	47.00 L	Curb	On Grade	0.02	0.33	0.33	2.00	2.52	2.52			15.00	0.47	7.90	11.48	0.23	12.00

NW ID	Inlet ID	CURB INLET IN SAG: Ponded Width Left (ft)	Ponded Width Right (ft)	Long Slope Left (%)	Long Slope Right (%)	n	DROP INLET: No. of Grates	Grate Length (ft)	Grate Width (ft)	Grate Area (ft2)	Grate Perimeter (ft2)	Grate Area Reduction	Grate Perimeter Reduction	Allowable Head (ft)
NCC (CONT.)	CI-NCC16					0.015								
	CI-NCC15					0.015								
	CI-NCC14					0.015								
	CI-NCC13					0.015								
	CI-NCC12					0.015								
	CI-NCC11					0.015								
	CI-NCC10					0.015								
	CI-NCC9					0.015								
	CI-NCC8					0.015								
	GI-NCC1A	0.00	0.00	0.00	0.00	0.015	1	5.33	2.00	7.90	14.67	0.50	0.50	0.417
	CI-NCC7					0.015								
	CI-NCC6					0.015								
	CI-NCC5					0.015								
	CI-NCC4					0.015								
	CI-NCC3					0.015								
	CI-NCC2					0.015								
	CI-NCC1					0.015								
SCC	CI-SCC8					0.015								
	CI-SCC7					0.015								
	CI-SCC6					0.015								
	CI-SCC5					0.015								
	CI-SCC4					0.015								
	CI-SCC3					0.015								
	CI-SCC2					0.015								
	CI-SCC1					0.015								
NC	CI-NC13	10.11	9.87	0.20	0.21	0.015								
	CI-NC12					0.015								
	CI-NC11					0.015								
	GI-NC4	0.00	0.00	0.00	0.00	0.015	1	7.67	2.00	11.19	19.33	0.50	0.50	0.417
	CI-NC10					0.015								
	GI-NC3	0.00	0.00	0.00	0.00	0.015	1	7.67	2.00	11.19	19.33	0.50	0.50	0.417
	CI-NC9	12.87	12.57	0.20	0.21	0.015								
	CI-NC8					0.015								
	CI-NC7					0.015								
	GI-NC2					0.015	1	5.33	2.00	7.90	14.67	0.50	0.50	0.417
	CI-NC6					0.015								
	CI-NC5					0.015								

STATE OF TEXAS
NICHOLAS VON SPENCER
93702
LICENSED
PROFESSIONAL ENGINEER

Nicholas Von Spencer, P.E. 5-25-11
Signature of Registrant & Date

Texas Department of Transportation
© 2011

STORM SEWER HYDRAULIC DATA SHEET

SHEET 7 OF 19

DESIGN	FED. RD. DIV. NO.	STATE PROJECT NO.		HIGHWAY NO.
AMW	6	(SEE TITLE SHEET)		SH 289
GRAPHICS	STATE	DISTRICT	COUNTY	SHEET NO.
AMW	TEXAS	DALLAS	COLLIN	272
CHECK	CONTROL	SECTION	JOB	
NVS	0091	04	055	
CHECK NVS				

R-201104-01

T:\DALDGN*A\SH 289 Celina\THE PLANS\Drainage Storm Sewer\Drainage Computation Sheets\hydraulicdatasheets.dgn 5/22/2011 9:44:13 AM

INLET COMPUTATIONS

NW ID	Inlet ID	Drainage Area ID	Inlet Station	Inlet Offset (ft)		Inlet Type	Profile Type	Comp X-Sect Spread S (%)	Curb Dep (ft)	Curb Height (ft)	Curb Dep Width (ft)	Total Discharge (cfs)	Capacity (cfs)	By Pass Flow (cfs)	By Pass Flow into Node	Inlet Length Actual (ft)	CURB INLET ON GRADE: Long Slope On Grade (%)	Inlet Length Required (ft)	Comp Ponded Width (ft)	Comp Ponded Depth (ft)	Allowable Ponded Width (ft)
NC (CONT.)	CI-NC4	CI-NC4	353+72.50	47.00	L	Curb	On Grade	0.02	0.33	0.33	2.00	2.81	2.81			15.00	0.47	8.39	11.96	0.24	12.00
	CI-NC3	CI-NC3	354+74.00	47.00	L	Curb	On Grade	0.02	0.33	0.33	2.00	2.39	2.39			15.00	0.47	7.67	11.26	0.23	12.00
	GI-NC1	GI-NC1	355+53.77	57.56	L	Grate	On Grade	0.02				2.47	2.01	0.461	CI-NC3		0.47		11.40	0.23	
	CI-NC2	CI-NC2	355+92.00	47.00	L	Curb	On Grade	0.02	0.33	0.33	2.00	2.49	2.49			15.00	0.47	7.85	11.44	0.23	12.00
	CI-NC1	CI-NC1	356+53.00	47.00	L	Curb	On Grade	0.02	0.33	0.33	2.00	1.85	1.85			15.00	0.28	5.88	11.29	0.23	12.00
SC	CI-SC8	CI-SC8	340+50.70	47.00	R	Curb	Sag	0.02	0.33	0.33	2.00	2.24	11.52			15.00		2.25	6.99	0.14	12.00
	CI-SC7	CI-SC7	340+99.12	47.00	R	Curb	On Grade	0.02	0.33	0.33	2.00	1.50	1.50			15.00	0.32	5.42	10.17	0.20	12.00
	CI-SC6	CI-SC6	344+76.26	47.00	R	Curb	On Grade	0.02	0.33	0.33	2.00	1.45	1.45			10.00	0.35	5.43	9.88	0.20	12.00
	CI-SC5	CI-SC5	347+50.00	47.00	R	Curb	On Grade	0.02	0.33	0.33	2.00	1.98	1.98			10.00	0.35	6.44	11.12	0.22	12.00
	CI-SC4	CI-SC4	348+97.49	47.00	R	Curb	Sag	0.02	0.33	0.33	2.00	2.24	11.52			15.00		6.27	7.01	0.14	12.00
	CI-SC3	CI-SC3	350+75.00	47.00	R	Curb	On Grade	0.02	0.33	0.33	2.00	1.37	1.37			10.00	0.47	5.69	9.15	0.18	12.00
	CI-SC2	CI-SC2	352+75.00	47.00	R	Curb	On Grade	0.02	0.33	0.33	2.00	1.33	1.33			10.00	0.47	5.59	9.03	0.18	12.00
	CI-SC1	CI-SC1	354+70.00	47.00	R	Curb	On Grade	0.02	0.33	0.33	2.00	1.66	1.66			10.00	0.47	6.28	9.81	0.20	12.00
ND	CI-ND14	CI-ND14	376+99.51	47.00	L	Curb	On Grade	0.02	0.33	0.33	2.00	2.24	2.24			15.00	0.43	7.25	11.17	0.22	12.00
	CI-ND13	CI-ND13	372+17.07	47.00	L	Curb	On Grade	0.02	0.33	0.33	2.00	1.42	1.42			15.00	0.40	5.56	9.54	0.19	12.00
	GI-ND1A	GI-ND1A	372+17.04	64.51	L	Grate	Sag	0.01				6.94	8.04						31.24	0.38	12.00
	CI-ND12	CI-ND12	371+00.00	47.00	L	Curb	Sag	0.02	0.33	0.33	2.00	2.38	11.52			15.00		5.58	7.29	0.15	12.00
	CI-ND11	CI-ND11	369+50.00	47.00	L	Curb	On Grade	0.02	0.33	0.33	2.00	1.94	1.94			15.00	1.13	8.48	8.83	0.18	
	GI-ND1B	GI-ND1B	370+91.12	61.86	L	Grate	Sag	0.02				13.50	8.04						24.25	0.59	12.00
	CI-ND10	CI-ND10	368+34.10	47.00	L	Curb	On Grade	0.02	0.33	0.33	2.00	3.40	3.40			15.00	1.16	11.52	10.85	0.22	
	CI-ND9	CI-ND9	367+10.00	47.00	L	Curb	On Grade	0.02	0.33	0.33	2.00	4.12	4.12			15.00	1.16	12.81	11.66	0.23	12.00
	CI-ND8	CI-ND8	366+00.00	47.00	L	Curb	On Grade	0.02	0.33	0.33	2.00	2.90	2.90			15.00	1.16	10.56	10.22	0.20	12.00
	CI-ND7	CI-ND7	365+50.00	47.00	L	Curb	On Grade	0.02	0.33	0.33	2.00	3.15	3.15			15.00	1.16	11.04	10.54	0.21	12.00
	CI-ND6	CI-ND6	364+65.00	47.00	L	Curb	On Grade	0.02	0.33	0.33	2.00	2.83	2.83			15.00	1.16	10.42	10.13	0.20	12.00
	CI-ND5	CI-ND5	363+80.00	47.00	L	Curb	On Grade	0.02	0.33	0.33	2.00	3.46	3.46			15.00	1.16	11.63	10.92	0.22	12.00
	CI-ND4	CI-ND4	362+55.00	47.00	L	Curb	On Grade	0.02	0.33	0.33	2.00	2.55	2.55			15.00	1.16	9.85	9.74	0.20	12.00
	CI-ND3	CI-ND3	361+30.00	47.00	L	Curb	On Grade	0.02	0.33	0.33	2.00	1.69	1.69			15.00	1.16	7.94	8.34	0.17	12.00
	CI-ND2	CI-ND2	360+30.00	47.00	L	Curb	On Grade	0.02	0.33	0.33	2.00	1.73	1.73			15.00	1.16	8.05	8.43	0.17	12.00
	CI-ND1	CI-ND1	359+30.10	47.00	L	Curb	On Grade	0.02	0.33	0.33	2.00	2.53	2.53			15.00	1.16	9.81	9.71	0.19	12.00
	CI-ND0	CI-ND0	358+21.68	47.00	L	Curb	On Grade	0.02	0.33	0.33	2.00	3.10	3.10			15.00	0.81	10.05	11.23	0.23	12.00
SD	CI-SD0	CI-SD0	376+99.51	47.00	R	Curb	On Grade	0.02	0.33	0.33	2.00	2.40	2.40			15.00	0.43	7.53	11.46	0.23	12.00
	CI-SD1	CI-SD1	372+17.07	47.00	R	Curb	On Grade	0.02	0.33	0.33	2.00	2.35	2.35			15.00	0.40	7.32	11.53	0.23	12.00
	CI-SD2	CI-SD2	371+00.00	47.00	R	Curb	Sag	0.02	0.33	0.33	2.00	1.97	11.52			15.00		7.97	6.43	0.13	12.00
	CI-SD3	CI-SD3	369+50.00	47.00	R	Curb	On Grade	0.02	0.33	0.33	2.00	1.64	1.64			10.00	1.13	7.78	8.29	0.17	12.00
	CI-SD4	CI-SD4	367+10.00	47.00	R	Curb	On Grade	0.02	0.33	0.33	2.00	1.16	1.16			10.00	1.16	6.59	7.25	0.15	12.00
	CI-SD5	CI-SD5	365+50.00	47.00	R	Curb	On Grade	0.02	0.33	0.33	2.00	1.23	1.23			10.00	1.16	6.77	7.41	0.15	12.00

NW ID	Inlet ID	CURB INLET IN SAG: Ponded Width Left (ft)	Ponded Width Right (ft)	Long Slope Left (%)	Long Slope Right (%)	n	DROP INLET: No. of Grates	Grate Length (ft)	Grate Width (ft)	Grate Area (ft2)	Grate Perimeter (ft2)	Grate Area Reduction	Grate Perimeter Reduction	Allowable Head (ft)
NC (CONT.)	CI-NC4					0.015								
	CI-NC3					0.015								
	GI-NC1					0.015	3	5.33	2.00	7.90	14.67	0.50	0.50	0.417
	CI-NC2					0.015								
	CI-NC1					0.015								
SC	CI-SC8	10.03	9.79	0.20	0.21	0.015								
	CI-SC7					0.015								
	CI-SC6					0.015								
	CI-SC5					0.015								
	CI-SC4	10.04	9.80	0.20	0.21	0.015								
	CI-SC3					0.015								
	CI-SC2					0.015								
	CI-SC1					0.015								
ND	CI-ND14					0.015								
	CI-ND13					0.015								
	GI-ND1A	0.00	0.00	0.00	0.00	0.015	1	7.67	2.00	11.19	19.33	0.50	0.50	0.417
	CI-ND12	10.27	10.03	0.20	0.21	0.015								
	CI-ND11					0.015								
	GI-ND1B	0.00	0.00	0.00	0.00	0.015	1	7.67	2.00	11.19	19.33	0.50	0.50	0.417
	CI-ND10					0.015								
	CI-ND9					0.015								
	CI-ND8					0.015								
	CI-ND7					0.015								
	CI-ND6					0.015								
	CI-ND5					0.015								
	CI-ND4					0.015								
	CI-ND3					0.015								
	CI-ND2					0.015								
	CI-ND1					0.015								
	CI-ND0					0.015								
SD	CI-SD0					0.015								
	CI-SD1					0.015								
	CI-SD2	9.56	9.35	0.20	0.21	0.015								
	CI-SD3					0.015								
	CI-SD4					0.015								
	CI-SD5					0.015								

STATE OF TEXAS
NICHOLAS VON SPENCER
93702
LICENSED
PROFESSIONAL ENGINEER

Signature of Registrant & Date, P.E. 5-25-11

Texas Department of Transportation
© 2011

STORM SEWER HYDRAULIC DATA SHEET

SHEET 8 OF 19

DESIGN	FED. RD. DIV. NO.	STATE PROJECT NO.		HIGHWAY NO.
AMW	6	(SEE TITLE SHEET)		SH 289
GRAPHICS	STATE	DISTRICT	COUNTY	SHEET NO.
AMW	TEXAS	DALLAS	COLLIN	273
CHECK	CONTROL	SECTION	JOB	
NVS	0091	04	055	
CHECK NVS				

R-201104-01

INLET COMPUTATIONS

NW ID	Inlet ID	Drainage Area ID	Inlet Station	Inlet Offset (ft)		Inlet Type	Profile Type	Comp X-Sect Spread S (%)	Curb Dep (ft)	Curb Height (ft)	Curb Dep Width (ft)	Total Discharge (cfs)	Capacity (cfs)	By Pass Flow (cfs)	By Pass Flow into Node	Inlet Length Actual (ft)	CURB INLET ON GRADE: Long Slope On Grade (%)	Inlet Length Required (ft)	Comp Ponded Width (ft)	Comp Ponded Depth (ft)	Allowable Ponded Width (ft)
SD (CONT.)	CI-SD6	CI-SD6	363+80.00	47.00	R	Curb	On Grade	0.02	0.33	0.33	2.00	1.69	1.69			10.00	1.16	7.96	8.36	0.17	12.00
	CI-SD7	CI-SD7	361+30.00	47.00	R	Curb	On Grade	0.02	0.33	0.33	2.00	1.47	1.47			10.00	1.16	7.41	7.92	0.16	12.00
	CI-SD8	CI-SD8	359+30.10	47.00	R	Curb	On Grade	0.02	0.33	0.33	2.00	1.47	1.47			10.00	1.16	7.41	7.92	0.16	12.00
NGG	CI-NGG1	CI-NGG1	390+97.88	47.00	L	Curb	Sag	0.02	0.33	0.33	2.00	2.80	11.52			15.00		3.08	8.11	0.16	12.00
	CI-NGG2	CI-NGG2	389+50.00	47.00	L	Curb	On Grade	0.02	0.33	0.33	2.00	2.04	2.04			15.00	0.43	6.90	10.79	0.22	12.00
	CI-NGG3	CI-NGG3	386+50.00	47.00	L	Curb	On Grade	0.02	0.33	0.33	2.00	2.02	2.02			15.00	0.43	6.86	10.75	0.22	12.00
	CI-NGG4	CI-NGG4	383+50.00	47.00	L	Curb	On Grade	0.02	0.33	0.33	2.00	2.30	2.30			15.00	0.43	7.36	11.29	0.23	12.00
	CI-NGG5	CI-NGG5	380+50.00	47.00	L	Curb	On Grade	0.02	0.33	0.33	2.00	1.10	1.10			15.00	0.43	4.97	8.57	0.17	12.00
	CI-NGG6	CI-NGG6	379+07.41	47.00	L	Curb	On Grade	0.02	0.33	0.33	2.00	2.37	2.37			15.00	0.43	7.48	11.41	0.23	12.00
	GI-NGG1A	GI-NGG1A	380+44.36	67.78	L	Grate	Sag	0.01				8.21	8.04						44.42	0.42	
SGG	CI-SGG1	CI-SGG1	390+97.88	47.00	R	Curb	Sag	0.02	0.33	0.33	2.00	2.73	8.42			10.00		2.85	9.84	0.20	12.00
	CI-SGG2	CI-SGG2	389+50.00	47.00	R	Curb	On Grade	0.02	0.33	0.33	2.00	2.06	2.06			10.00	0.43	6.92	10.82	0.22	12.00
	CI-SGG3	CI-SGG3	386+50.00	47.00	R	Curb	On Grade	0.02	0.33	0.33	2.00	2.05	2.05			10.00	0.43	6.91	10.81	0.22	12.00
	CI-SGG4	CI-SGG4	383+50.00	47.00	R	Curb	On Grade	0.02	0.33	0.33	2.00	2.12	2.12			10.00	0.43	7.03	10.93	0.22	12.00
	CI-SGG5	CI-SGG5	380+50.00	47.00	R	Curb	On Grade	0.02	0.33	0.33	2.00	1.03	1.03			10.00	0.43	4.80	8.36	0.17	12.00
	CI-SGG6	CI-SGG6	379+07.41	47.00	R	Curb	On Grade	0.02	0.33	0.33	2.00	2.13	2.13			10.00	0.43	7.05	10.96	0.22	12.00
NG	GI-NG1C	GI-NG1C	392+09.97	67.50	L	Grate	Sag	0.02				12.59	8.04						25.11	0.56	
	CI-NG1	CI-NG1	393+50.00	47.00	L	Curb	On Grade	0.02	0.33	0.33	2.00	1.05	1.05			10.00	0.46	4.92	8.32	0.17	12.00
	GI-NG1A	GI-NG1A	394+16.25	67.50	L	Grate	Sag	0.01				6.61	8.04						28.36	0.37	
SG	CI-SG1	CI-SG1	393+50.00	47.00	R	Curb	On Grade	0.02	0.33	0.33	2.00	1.09	1.09			10.00	0.46	5.02	8.45	0.17	12.00
NHH	CI-NHH3	CI-NHH3	400+50.00	47.00	L	Curb	On Grade	0.02	0.33	0.33	2.00	1.36	1.36			10.0	0.40	5.44	9.39	0.19	12.00
	CI-NHH2	CI-NHH2	398+50.00	47.00	L	Curb	On Grade	0.02	0.33	0.33	2.00	1.36	1.36			10.0	0.40	5.44	9.39	0.19	12.00
	CI-NHH1	CI-NHH1	396+50.00	47.00	L	Curb	On Grade	0.02	0.33	0.33	2.00	0.99	0.99			5.0	0.40	4.61	8.33	0.17	12.00
SHH	CI-SHH3	CI-SHH3	400+50.00	47.00	R	Curb	On Grade	0.02	0.33	0.33	2.00	1.36	1.36			10.0	0.40	5.44	9.39	0.19	12.00
	CI-SHH2	CI-SHH2	398+50.00	47.00	R	Curb	On Grade	0.02	0.33	0.33	2.00	1.36	1.36			10.0	0.40	5.44	9.39	0.19	12.00
	CI-SHH1	CI-SHH1	396+50.00	47.00	R	Curb	On Grade	0.02	0.33	0.33	2.00	0.99	0.99			5.0	0.40	4.61	8.33	0.17	12.00
NH	CI-NH10	CI-NH10	402+30.00	47.00	L	Curb	Sag	0.02	0.33	0.33	2.00	2.38	11.52			15.0		3.08	7.28	0.15	12.00
	CI-NH9	CI-NH9	404+00.00	47.00	L	Curb	On Grade	0.02	0.33	0.33	2.00	2.04	2.04			10.0	0.42	6.83	10.86	0.22	12.00
	CI-NH8	CI-NH8	407+00.00	47.00	L	Curb	On Grade	0.02	0.33	0.33	2.00	2.06	2.06			10.0	0.42	6.87	10.91	0.22	12.00
	CI-NH7	CI-NH7	410+00.00	47.00	L	Curb	On Grade	0.02	0.33	0.33	2.00	1.71	1.71			10.0	0.42	6.20	10.16	0.20	12.00
	CI-NH6	CI-NH6	411+75.00	47.00	L	Curb	On Grade	0.02	0.33	0.33	2.00	2.57	2.57			10.0	0.42	7.76	11.84	0.24	12.00
	CI-NH5	CI-NH5	414+00.00	47.00	L	Curb	On Grade	0.02	0.33	0.33	2.00	2.54	2.54			10.0	0.42	7.71	11.79	0.24	12.00

NW ID	Inlet ID	CURB INLET IN SAG: Ponded Width Left (ft)	Ponded Width Right (ft)	Long Slope Left (%)	Long Slope Right (%)	n	DROP INLET: No. of Grates	Grate Length (ft)	Grate Width (ft)	Grate Area (ft2)	Grate Perimeter (ft2)	Grate Area Reduction	Grate Perimeter Reduction	Allowable Head (ft)
SD (CONT.)	CI-SD6					0.015								
	CI-SD7					0.015								
	CI-SD8					0.015								
NGG	CI-NGG1	10.90	10.65	0.20	0.21	0.015								
	CI-NGG2					0.015								
	CI-NGG3					0.015								
	CI-NGG4					0.015								
	CI-NGG5					0.015								
	CI-NGG6					0.015								
	GI-NGG1A	0.00	0.00	0.00	0.00	0.015	1	7.67	2.00	11.19	19.33	0.50	0.50	0.417
SGG	CI-SGG1	10.80	10.56	0.20	0.21	0.015								
	CI-SGG2					0.015								
	CI-SGG3					0.015								
	CI-SGG4					0.015								
	CI-SGG5					0.015								
	CI-SGG6					0.015								
NG	GI-NG1C	0.00	0.00	0.00	0.00	0.015	1	7.67	2.00	11.19	19.33	0.50	0.50	0.417
	CI-NG1					0.015								
	GI-NG1A	0.00	0.00	0.00	0.00	0.015	1	7.67	2.00	11.19	19.33	0.50	0.50	0.417
SG	CI-SG1					0.015								
NHH	CI-NHH3					0.015								
	CI-NHH2					0.015								
	CI-NHH1					0.015								
SHH	CI-SHH3					0.015								
	CI-SHH2					0.015								
	CI-SHH1					0.015								
NH	CI-NH10	10.26	10.02	0.20	0.21	0.015								
	CI-NH9					0.015								
	CI-NH8					0.015								
	CI-NH7					0.015								
	CI-NH6					0.015								
	CI-NH5					0.015								

STATE OF TEXAS
NICHOLAS VON SPENCER
93702
LICENSED
PROFESSIONAL ENGINEER

Signature of Registrant & Date, P.E. 4-7-11

Texas Department of Transportation
© 2011

STORM SEWER HYDRAULIC DATA SHEET

SHEET 9 OF 19

DESIGN	FED. RD. DIV. NO.	STATE PROJECT NO.		HIGHWAY NO.
AMW	6	(SEE TITLE SHEET)		SH 289
GRAPHICS AMW	STATE	DISTRICT	COUNTY	SHEET NO.
CHECK NVS	TEXAS	DALLAS	COLLIN	274
CHECK NVS	CONTROL 0091	SECTION 04	JOB 055	

INLET COMPUTATIONS

NW ID	Inlet ID	Drainage Area ID	Inlet Station	Inlet Offset (ft)		Inlet Type	Profile Type	Comp X-Sect Spread S (%)	Curb Dep (ft)	Curb Height (ft)	Curb Dep Width (ft)	Total Discharge (cfs)	Capacity (cfs)	By Pass Flow (cfs)	By Pass Flow into Node	Inlet Length Actual (ft)	CURB INLET ON GRADE: Long Slope On Grade (%)	Inlet Length Required (ft)	Comp Ponded Width (ft)	Comp Ponded Depth (ft)	Allowable Ponded Width (ft)
NH (CONT.)	CI-NH4	CI-NH4	416+25.00	47.00	L	Curb	On Grade	0.02	0.33	0.33	2.00	1.60	1.60			10.0	0.42	5.98	9.91	0.20	12.00
	GI-NH3	GI-NH3	416+25.00	65.00	L	Grate	Sag	0.01				4.56	6.10						34.36	0.34	
	GI-NH2	GI-NH2	417+25.00	65.00	L	Grate	Sag	0.01				4.54	6.10						34.25	0.34	
	GI-NH1	GI-NH1	418+10.00	65.00	L	Grate	Sag	0.01				4.18	6.10						32.40	0.32	
SH	CI-SH6	CI-SH6	402+30.00	47.00	R	Curb	Sag	0.02	0.33	0.33	2.00	2.38	11.52			15.0		3.08	7.28	0.15	12.00
	CI-SH5	CI-SH5	404+00.00	47.00	R	Curb	On Grade	0.02	0.33	0.33	2.00	2.04	2.04			10.0	0.42	6.83	10.86	0.22	12.00
	CI-SH4	CI-SH4	407+00.00	47.00	R	Curb	On Grade	0.02	0.33	0.33	2.00	2.04	2.04			10.0	0.42	6.83	10.86	0.22	12.00
	CI-SH3	CI-SH3	410+00.00	47.00	R	Curb	On Grade	0.02	0.33	0.33	2.00	2.04	2.04			10.0	0.42	6.83	10.86	0.22	12.00
	CI-SH2	CI-SH2	413+00.00	47.00	R	Curb	On Grade	0.02	0.33	0.33	2.00	2.24	2.24			10.0	0.42	7.18	11.24	0.23	12.00
	CI-SH1	CI-SH1	416+00.00	47.00	R	Curb	On Grade	0.02	0.33	0.33	2.00	1.93	1.93			10.0	0.42	6.62	10.63	0.21	12.00
NJJ	CI-NJJ10	CI-NJJ10	433+00.00	47.00	L	Curb	On Grade	0.02	0.33	0.33	2.00	2.48	2.48			10.0	0.46	7.77	11.47	0.23	12.00
	CI-NJJ9	CI-NJJ9	430+00.00	47.00	L	Curb	On Grade	0.02	0.33	0.33	2.00	2.04	2.04			10.0	0.46	6.98	10.67	0.21	12.00
	CI-NJJ8	CI-NJJ8	427+00.00	47.00	L	Curb	On Grade	0.02	0.33	0.33	2.00	2.05	2.05			10.0	0.46	7.00	10.69	0.21	12.00
	CI-NJJ7	CI-NJJ7	424+00.00	47.00	L	Curb	On Grade	0.02	0.33	0.33	2.00	1.56	1.56			10.0	0.46	6.04	9.65	0.19	12.00
	CI-NJJ6	CI-NJJ6	422+00.00	47.00	L	Curb	On Grade	0.02	0.33	0.33	2.00	1.57	1.57			10.0	0.46	6.06	9.67	0.19	12.00
	CI-NJJ5	CI-NJJ5	420+00.00	47.00	L	Curb	On Grade	0.02	0.33	0.33	2.00	1.79	1.79			10.0	0.46	6.50	10.16	0.20	12.00
	GI-NJJ2	GI-NJJ2	419+26.00	130.00	L	Grate	Sag	0.01				3.11	4.16						34.39	0.34	
	GI-NJJ1	GI-NJJ1	418+90.00	110.00	L	Grate	Sag	0.01				5.19	6.10						37.43	0.37	
SJJ	CI-SJJ5	CI-SJJ5	433+00.00	47.00	R	Curb	On Grade	0.02	0.33	0.33	2.00	2.04	2.04			10.0	0.46	6.98	10.67	0.21	12.00
	CI-SJJ4	CI-SJJ4	430+00.00	47.00	R	Curb	On Grade	0.02	0.33	0.33	2.00	2.04	2.04			10.0	0.46	6.98	10.67	0.21	12.00
	CI-SJJ3	CI-SJJ3	427+00.00	47.00	R	Curb	On Grade	0.02	0.33	0.33	2.00	2.04	2.04			10.0	0.46	6.98	10.67	0.21	12.00
	CI-SJJ2	CI-SJJ2	424+00.00	47.00	R	Curb	On Grade	0.02	0.33	0.33	2.00	2.13	2.13			10.0	0.46	7.15	10.84	0.22	12.00
	CI-SJJ1	CI-SJJ1	421+00.00	47.00	R	Curb	On Grade	0.02	0.33	0.33	2.00	2.33	2.33			10.0	0.46	7.51	11.21	0.22	12.00
NJ	CI-NJ11	CI-NJ11	434+47.00	47.00	L	Curb	Sag	0.02	0.33	0.33	2.00	2.04	11.52			15.0		5.02	6.57	0.13	12.00
	CI-NJ10	CI-NJ10	436+00.00	47.00	L	Curb	On Grade	0.02	0.33	0.33	2.00	1.87	1.87			10.0	0.49	6.77	10.19	0.20	12.00
	CI-NJ9	CI-NJ9	438+75.00	47.00	L	Curb	On Grade	0.02	0.33	0.33	2.00	1.53	1.53			10.0	0.49	6.09	9.45	0.19	12.00
	CI-NJ8	CI-NJ8	441+00.00	47.00	L	Curb	On Grade	0.02	0.33	0.33	2.00	3.27	3.27			10.0	0.49	9.24	12.57	0.25	12.00
	CI-NJ7	CI-NJ7	444+00.00	47.00	L	Curb	On Grade	0.02	0.33	0.33	2.00	3.77	3.77			15.0	1.65	13.25	10.55	0.21	12.00
	GI-NJ6	GI-NJ6	446+15.00	70.00	L	Grate	Sag	0.02				0.61	4.16						5.79	0.12	
	CI-NJ5	CI-NJ5	447+00.00	47.00	L	Curb	On Grade	0.02	0.33	0.33	2.00	1.86	1.86			10.0	2.04	9.64	7.78	0.16	12.00
	CI-NJ4	CI-NJ4	448+50.00	47.00	L	Curb	On Grade	0.02	0.33	0.33	2.00	3.55	3.55			15.0	2.04	13.50	9.92	0.20	12.00
	CI-NJ3	CI-NJ3	450+00.00	47.00	L	Curb	On Grade	0.02	0.33	0.33	2.00	2.53	2.53			15.0	2.04	11.29	8.74	0.18	12.00
	CI-NJ2	CI-NJ2	451+25.00	47.00	L	Curb	On Grade	0.02	0.33	0.33	2.00	2.77	2.77			15.0	1.89	11.61	9.17	0.18	12.00
	CI-NJ1	CI-NJ1	452+50.00	47.00	L	Curb	On Grade	0.02	0.33	0.33	2.00	4.37	4.37			15.0	1.13	13.16	11.98	0.24	12.00

NW ID	Inlet ID	CURB INLET IN SAG: Ponded Width Left (ft)	Ponded Width Right (ft)	Long Slope Left (%)	Long Slope Right (%)	n	DROP INLET: No. of Grates	Grate Length (ft)	Grate Width (ft)	Grate Area (ft2)	Grate Perimeter (ft2)	Grate Area Reduction	Grate Perimeter Reduction	Allowable Head (ft)
NH (CONT.)	CI-NH4					0.015								
	GI-NH3	0.00	0.00	0.00	0.00	0.015	1	5.33	2.00	7.90	14.67	0.50	0.50	0.417
	GI-NH2	0.00	0.00	0.00	0.00	0.015	1	5.33	2.00	7.90	14.67	0.50	0.50	0.417
	GI-NH1	0.00	0.00	0.00	0.00	0.015	1	5.33	2.00	7.90	14.67	0.50	0.50	0.417
SH	CI-SH6	10.26	10.02	0.20	0.21	0.015								
	CI-SH5					0.015								
	CI-SH4					0.015								
	CI-SH3					0.015								
	CI-SH2					0.015								
	CI-SH1					0.015								
NJJ	CI-NJJ10					0.015								
	CI-NJJ9					0.015								
	CI-NJJ8					0.015								
	CI-NJJ7					0.015								
	CI-NJJ6					0.015								
	CI-NJJ5					0.015								
	GI-NJJ2	16.70	16.70	0.00	0.00	0.030	1	3.00	2.00	4.62	10.00	0.50	0.50	0.417
	GI-NJJ1	16.70	16.70	0.00	0.00	0.030	1	5.33	2.00	7.90	14.67	0.50	0.50	0.417
SJJ	CI-SJJ5					0.015								
	CI-SJJ4					0.015								
	CI-SJJ3					0.015								
	CI-SJJ2					0.015								
	CI-SJJ1					0.015								
NJ	CI-NJ11	9.31	9.30	0.23	0.25	0.015								
	CI-NJ10					0.015								
	CI-NJ9					0.015								
	CI-NJ8					0.015								
	CI-NJ7					0.015								
	GI-NJ6	0.00	0.00	0.00	0.00	0.015	1	3.00	2.00	4.62	10.00	0.50	0.50	0.417
	CI-NJ5					0.015								
	CI-NJ4					0.015								
	CI-NJ3					0.015								
	CI-NJ2					0.015								
	CI-NJ1					0.015								

STATE OF TEXAS
NICHOLAS VON SPENCER
93702
LICENSED
PROFESSIONAL ENGINEER

Signature of Registrant & Date, P.E. 4-7-11

Texas Department of Transportation
© 2011

STORM SEWER HYDRAULIC DATA SHEET

SHEET 10 OF 19

DESIGN	FED. RD. DIV. NO.	STATE PROJECT NO.		HIGHWAY NO.
AMW	6	(SEE TITLE SHEET)		SH 289
GRAPHICS	STATE	DISTRICT	COUNTY	SHEET NO.
AMW	TEXAS	DALLAS	COLLIN	275
CHECK	CONTROL	SECTION	JOB	
NVS	0091	04	055	
CHECK NVS				

T:\DALDGN*A\SH 289 Celina\THE PLANS\Drainage Storm Sewer\Drainage Computation Sheets\hydraulicdatasheets.dgn 5/22/2011 9:44:31 AM

INLET COMPUTATIONS

NW ID	Inlet ID	Drainage Area ID	Inlet Station	Inlet Offset (ft)		Inlet Type	Profile Type	Comp X-Sect Spread S (%)	Curb Dep (ft)	Curb Height (ft)	Curb Dep Width (ft)	Total Discharge (cfs)	Capacity (cfs)	By Pass Flow (cfs)	By Pass Flow into Node	Inlet Length Actual (ft)	CURB INLET ON GRADE: Long Slope On Grade (%)	Inlet Length Required (ft)	Comp Ponded Width (ft)	Comp Ponded Depth (ft)	Allowable Ponded Width (ft)
SJ	CI-SJ8	CI-SJ8	434+47.00	47.00	R	Curb	Sag	0.02	0.33	0.33	2.00	2.04	11.52			15.0		5.02	6.57	0.13	12.00
	CI-SJ7	CI-SJ7	436+00.00	47.00	R	Curb	On Grade	0.02	0.33	0.33	2.00	1.36	1.36			10.0	0.49	5.72	9.04	0.18	12.00
	CI-SJ6	CI-SJ6	438+00.00	47.00	R	Curb	On Grade	0.02	0.33	0.33	2.00	2.07	2.07			10.0	0.49	7.16	10.58	0.21	12.00
	CI-SJ5	CI-SJ5	441+00.00	47.00	R	Curb	On Grade	0.02	0.33	0.33	2.00	2.48	2.48			10.0	0.49	7.91	11.33	0.23	12.00
	CI-SJ4	CI-SJ4	444+00.00	47.00	R	Curb	On Grade	0.02	0.33	0.33	2.00	2.29	2.29	0.002	CI-SJ5	10.0	1.65	10.18	8.76	0.18	12.00
	CI-SJ3	CI-SJ3	447+00.00	47.00	R	Curb	On Grade	0.02	0.33	0.33	2.00	2.12	2.12	0.004	CI-SJ4	10.0	2.04	10.30	8.18	0.16	12.00
	CI-SJ2	CI-SJ2	450+00.00	47.00	R	Curb	On Grade	0.02	0.33	0.33	2.00	1.81	1.81			10.0	2.04	9.52	7.71	0.15	12.00
	CI-SJ1	CI-SJ1	452+50.00	47.00	R	Curb	On Grade	0.02	0.33	0.33	2.00	1.73	1.73			10.0	1.13	7.98	8.46	0.17	12.00
NKK	CI-NKK10	CI-NKK10	469+52.00	47.00	L	Curb	Sag	0.02	0.33	0.33	2.00	3.40	11.52			15.0		3.28	9.25	0.19	12.00
	CI-NKK9	CI-NKK9	467+75.00	47.00	L	Curb	On Grade	0.02	0.33	0.33	2.00	1.32	1.32			10.0	0.44	5.48	9.15	0.18	12.00
	CI-NKK8	CI-NKK8	466+25.00	47.00	L	Curb	On Grade	0.02	0.33	0.33	2.00	3.07	3.07			10.0	0.44	8.67	12.53	0.25	12.00
	CI-NKK7	CI-NKK7	464+75.00	47.00	L	Curb	On Grade	0.02	0.33	0.33	2.00	3.45	3.45			15.0	0.85	10.80	11.57	0.23	12.00
	CI-NKK6	CI-NKK6	463+20.00	47.00	L	Curb	On Grade	0.02	0.33	0.33	2.00	3.60	3.60			15.0	1.83	13.24	10.17	0.20	12.00
	CI-NKK5	CI-NKK5	461+75.00	47.00	L	Curb	On Grade	0.02	0.33	0.33	2.00	2.64	2.64			15.0	2.21	11.79	8.75	0.18	12.00
	CI-NKK4	CI-NKK4	460+50.00	47.00	L	Curb	On Grade	0.02	0.33	0.33	2.00	2.77	2.77			15.0	2.21	12.08	8.91	0.18	12.00
	CI-NKK3	CI-NKK3	459+00.00	47.00	L	Curb	On Grade	0.02	0.33	0.33	2.00	2.76	2.76			15.0	2.21	12.06	8.89	0.18	12.00
	CI-NKK2	CI-NKK2	457+50.00	47.00	L	Curb	On Grade	0.02	0.33	0.33	2.00	3.13	3.13			15.0	1.91	12.41	9.58	0.19	12.00
	CI-NKK1	CI-NKK1	456+00.00	47.00	L	Curb	On Grade	0.02	0.33	0.33	2.00	3.71	3.71			15.0	1.00	11.66	11.53	0.23	12.00
SKK	CI-SKK6	CI-SKK6	469+52.00	47.00	R	Curb	Sag	0.02	0.33	0.33	2.00	3.41	11.52			15.0		3.32	9.26	0.19	12.00
	CI-SKK5	CI-SKK5	467+75.00	47.00	R	Curb	On Grade	0.02	0.33	0.33	2.00	2.09	2.09			10.0	0.44	7.01	10.86	0.22	12.00
	CI-SKK4	CI-SKK4	464+75.00	47.00	R	Curb	On Grade	0.02	0.33	0.33	2.00	2.20	2.20			10.0	0.85	8.45	9.78	0.20	12.00
	CI-SKK3	CI-SKK3	462+00.00	47.00	R	Curb	On Grade	0.02	0.33	0.33	2.00	2.74	2.74			15.0	2.21	12.00	8.86	0.18	12.00
	CI-SKK2	CI-SKK2	459+00.00	47.00	R	Curb	On Grade	0.02	0.33	0.33	2.00	3.67	3.67			15.0	2.21	14.00	9.89	0.20	12.00
	CI-SKK1	CI-SKK1	456+00.00	47.00	R	Curb	On Grade	0.02	0.33	0.33	2.00	1.86	1.86			10.0	1.00	8.03	8.90	0.18	12.00
NK	CI-NK5	CI-NK5	471+50.00	47.00	L	Curb	On Grade	0.02	0.33	0.33	2.00	2.23	2.23			10.0	1.23	9.31	9.17	0.18	12.00
	GI-NK3B	GI-NK3B	473+17.00	70.00	L	Grate	Sag	0.04				5.56	8.04						8.16	0.33	
	CI-NK2	CI-NK2	473+50.00	47.00	L	Curb	On Grade	0.02	0.33	0.33	2.00	2.35	2.35			10.0	1.23	9.58	9.35	0.19	12.00
	GI-NK4	GI-NK4	472+55.00	103.00	L	Grate	Sag	0.02				4.12	6.10						16.07	0.32	
	GI-NK4A	GI-NK4A	472+17.00	103.00	L	Grate	Sag	0.05				3.82	4.16						8.76	0.39	
	GI-NK3A	GI-NK3A	473+32.00	70.00	L	Grate	Sag	0.04				4.06	8.04						7.56	0.27	
	CI-NK1	CI-NK1	476+00.00	47.00	L	Curb	On Grade	0.02	0.33	0.33	2.00	1.92	1.92			10.0	0.92	8.03	9.15	0.18	12.00
SK	CI-SK3	CI-SK3	472+00.00	47.00	R	Curb	On Grade	0.02	0.33	0.33	2.00	1.13	1.13			10.0	1.23	6.59	7.10	0.14	12.00
	CI-SK2	CI-SK2	473+50.00	47.00	R	Curb	On Grade	0.02	0.33	0.33	2.00	1.72	1.72			10.0	1.23	8.14	8.32	0.17	12.00
	CI-SK1	CI-SK1	476+00.00	47.00	R	Curb	On Grade	0.02	0.33	0.33	2.00	1.34	1.34			10.0	0.92	6.66	7.98	0.16	12.00

NW ID	Inlet ID	CURB INLET IN SAG: Ponded Width Left (ft)	Ponded Width Right (ft)	Long Slope Left (%)	Long Slope Right (%)	n	DROP INLET: No. of Grates	Grate Length (ft)	Grate Width (ft)	Grate Area (ft2)	Grate Perimeter (ft2)	Grate Area Reduction	Grate Perimeter Reduction	Allowable Head (ft)
SJ	CI-SJ8	9.31	9.30	0.23	0.25	0.015								
	CI-SJ7					0.015								
	CI-SJ6					0.015								
	CI-SJ5					0.015								
	CI-SJ4					0.015								
	CI-SJ3					0.015								
	CI-SJ2					0.015								
	CI-SJ1					0.015								
NKK	CI-NKK10	9.62	11.21	0.61	0.22	0.015								
	CI-NKK9					0.015								
	CI-NKK8					0.015								
	CI-NKK7					0.015								
	CI-NKK6					0.015								
	CI-NKK5					0.015								
	CI-NKK4					0.015								
	CI-NKK3					0.015								
	CI-NKK2					0.015								
	CI-NKK1					0.015								
SKK	CI-SKK6	10.60	10.07	0.22	0.61	0.015								
	CI-SKK5					0.015								
	CI-SKK4					0.015								
	CI-SKK3					0.015								
	CI-SKK2					0.015								
	CI-SKK1					0.015								
NK	CI-NK5					0.015								
	GI-NK3B	0.00	0.00	0.00	0.00	0.015	1	7.67	2.00	11.19	19.33	0.50	0.50	0.417
	CI-NK2					0.015								
	GI-NK4	0.00	0.00	0.00	0.00	0.015	1	5.33	2.00	7.90	14.67	0.50	0.50	0.417
	GI-NK4A	0.00	0.00	0.00	0.00	0.015	1	3.00	2.00	4.62	10.00	0.50	0.50	0.417
	GI-NK3A	0.00	0.00	0.00	0.00	0.015	1	7.67	2.00	11.19	19.33	0.50	0.50	0.417
	CI-NK1					0.015								
SK	CI-SK3					0.015								
	CI-SK2					0.015								
	CI-SK1					0.015								

STATE OF TEXAS
NICHOLAS VON SPENCER
93702
LICENSED
PROFESSIONAL ENGINEER

Nicholas V Spencer, P.E. 5-25-11
Signature of Registrant & Date

Texas Department of Transportation
© 2011

STORM SEWER HYDRAULIC DATA SHEET

SHEET 11 OF 19

DESIGN	FED. RD. DIV. NO.	STATE PROJECT NO.		HIGHWAY NO.
AMW	6	(SEE TITLE SHEET)		SH 289
GRAPHICS	STATE	DISTRICT	COUNTY	SHEET NO.
AMW	TEXAS	DALLAS	COLLIN	276
CHECK	CONTROL	SECTION	JOB	
NVS	0091	04	055	
CHECK NVS				

T:\DALDGN*A\SH 289 Celina\THE PLANS\Drainage Storm Sewer\Drainage Computation Sheets\hydraulicdatasheets.dgn 4/7/2011 2:24:14 PM

INLET COMPUTATIONS

NW ID	Inlet ID	Drainage Area ID	Inlet Station	Inlet Offset (ft)		Inlet Type	Profile Type	Comp X-Sect Spread S (%)	Curb Dep (ft)	Curb Height (ft)	Curb Dep Width (ft)	Total Discharge (cfs)	Capacity (cfs)	By Pass Flow (cfs)	By Pass Flow into Node	Inlet Length Actual (ft)	CURB INLET ON GRADE: Long Slope On Grade (%)	Inlet Length Required (ft)	Comp Ponded Width (ft)	Comp Ponded Depth (ft)	Allowable Ponded Width (ft)
NLL	CI-NLL6	CI-NLL6	493+00.00	47.00	L	Curb	Sag	0.02	0.33	0.33	2.00	2.45	11.52			15.0		5.02	7.42	0.15	12.00
	CI-NLL5	CI-NLL5	491+00.00	47.00	L	Curb	On Grade	0.02	0.33	0.33	2.00	2.10	2.10			10.0	0.53	7.37	10.48	0.21	12.00
	CI-NLL4	CI-NLL4	488+00.00	47.00	L	Curb	On Grade	0.02	0.33	0.33	2.00	2.03	2.03			10.0	1.31	9.01	8.74	0.18	12.00
	CI-NLL3	CI-NLL3	485+00.00	47.00	L	Curb	On Grade	0.02	0.33	0.33	2.00	2.36	2.36			10.0	1.31	9.75	9.25	0.19	12.00
	CI-NLL2	CI-NLL2	482+00.00	47.00	L	Curb	On Grade	0.02	0.33	0.33	2.00	3.80	3.80			15.0	1.31	12.60	11.05	0.22	12.00
	CI-NLL1	CI-NLL1	479+00.00	47.00	L	Curb	On Grade	0.02	0.33	0.33	2.00	2.05	2.05			10.0	0.89	8.22	9.43	0.19	12.00
SLL	CI-SLL6	CI-SLL6	493+00.00	47.00	R	Curb	Sag	0.02	0.33	0.33	2.00	2.45	11.52			15.0		5.02	7.42	0.15	12.00
	CI-SLL5	CI-SLL5	491+00.00	47.00	R	Curb	On Grade	0.02	0.33	0.33	2.00	2.10	2.10			10.0	0.53	7.37	10.48	0.21	12.00
	CI-SLL4	CI-SLL4	488+00.00	47.00	R	Curb	On Grade	0.02	0.33	0.33	2.00	2.03	2.03			10.0	1.31	9.02	8.74	0.18	12.00
	CI-SLL3	CI-SLL3	485+00.00	47.00	R	Curb	On Grade	0.02	0.33	0.33	2.00	2.03	2.03			10.0	1.31	9.02	8.74	0.18	12.00
	CI-SLL2	CI-SLL2	482+00.00	47.00	R	Curb	On Grade	0.02	0.33	0.33	2.00	3.01	3.01			15.0	1.31	11.10	10.12	0.20	12.00
	CI-SLL1	CI-SLL1	479+00.00	47.00	R	Curb	On Grade	0.02	0.33	0.33	2.00	1.61	1.61			10.0	0.89	7.26	8.62	0.17	12.00
NL	CI-NL4	CI-NL4	494+60.00	47.00	L	Curb	On Grade	0.02	0.33	0.33	2.00	1.28	1.28			10.0	0.40	5.26	9.17	0.18	12.00
	CI-NL3	CI-NL3	496+40.00	47.00	L	Curb	On Grade	0.02	0.33	0.33	2.00	2.19	2.19			10.0	0.40	7.04	11.23	0.23	12.00
	CI-NL2	CI-NL2	499+40.00	47.00	L	Curb	On Grade	0.02	0.33	0.33	2.00	1.83	1.83			10.0	0.40	6.39	10.51	0.21	12.00
	CI-NL1	CI-NL1	502+10.00	47.00	L	Curb	On Grade	0.02	0.33	0.33	2.00	2.02	2.02			10.0	0.40	6.74	10.90	0.22	12.00
SL	CI-SL4	CI-SL4	494+60.00	47.00	R	Curb	On Grade	0.02	0.33	0.33	2.00	1.28	1.28			10.0	0.40	5.26	9.17	0.18	12.00
	CI-SL3	CI-SL3	496+40.00	47.00	R	Curb	On Grade	0.02	0.33	0.33	2.00	2.04	2.04			10.0	0.40	6.77	10.93	0.22	12.00
	CI-SL2	CI-SL2	499+40.00	47.00	R	Curb	On Grade	0.02	0.33	0.33	2.00	1.83	1.83			10.0	0.40	6.39	10.51	0.21	12.00
	CI-SL1	CI-SL1	502+10.00	47.00	R	Curb	On Grade	0.02	0.33	0.33	2.00	1.50	1.50			10.0	0.40	5.72	9.73	0.20	12.00

NW ID	Inlet ID	CURB INLET IN SAG: Ponded Width Left (ft)	Ponded Width Right (ft)	Long Slope Left (%)	Long Slope Right (%)	n	DROP INLET: No. of Grates	Grate Length (ft)	Grate Width (ft)	Grate Area (ft2)	Grate Perimeter (ft2)	Grate Area Reduction	Grate Perimeter Reduction	Allowable Head (ft)
NLL	CI-NLL6	9.32	10.70	0.27	0.20	0.015								
	CI-NLL5					0.015								
	CI-NLL4					0.015								
	CI-NLL3					0.015								
	CI-NLL2					0.015								
	CI-NLL1					0.015								
SLL	CI-SLL6	9.32	10.70	0.27	0.20	0.015								
	CI-SLL5					0.015								
	CI-SLL4					0.015								
	CI-SLL3					0.015								
	CI-SLL2					0.015								
	CI-SLL1					0.015								
NL	CI-NL4					0.015								
	CI-NL3					0.015								
	CI-NL2					0.015								
	CI-NL1					0.015								
SL	CI-SL4					0.015								
	CI-SL3					0.015								
	CI-SL2					0.015								
	CI-SL1					0.015								

STATE OF TEXAS
NICHOLAS VON SPENCER
93702
LICENSED
PROFESSIONAL ENGINEER

Nicholas Von Spencer, P.E. 4-7-11
Signature of Registrant & Date

Texas Department of Transportation
© 2011

STORM SEWER HYDRAULIC DATA SHEET

SHEET 12 OF 19

DESIGN	FED. RD. DIV. NO.	STATE PROJECT NO.		HIGHWAY NO.
AMW	6	(SEE TITLE SHEET)		SH 289
GRAPHICS	STATE	DISTRICT	COUNTY	SHEET NO.
AMW	TEXAS	DALLAS	COLLIN	277
CHECK	CONTROL	SECTION	JOB	
NVS	0091	04	055	
CHECK NVS				

INLET COMPUTATIONS

NW ID	Inlet ID	Drainage Area ID	Inlet Station	Inlet Offset (ft)		Inlet Type	Profile Type	Comp X-Sect Spread S (%)	Curb Dep (ft)	Curb Height (ft)	Curb Dep Width (ft)	Total Discharge (cfs)	Capacity (cfs)	By Pass Flow (cfs)	By Pass Flow into Node	Inlet Length Actual (ft)	CURB INLET ON GRADE: Long Slope On Grade (%)	Inlet Length Required (ft)	Comp Ponded Width (ft)	Comp Ponded Depth (ft)	Allowable Ponded Width (ft)
NM	CI-NM5	CI-NM5	505+00.00	47.00	L	Curb	On Grade	0.02	0.33	0.33	2.00	2.11	2.11			10.0	1.61	9.69	8.53	0.17	12.00
	CI-NM4	CI-NM4	508+00.00	47.00	L	Curb	On Grade	0.02	0.33	0.33	2.00	2.04	2.04			15.0	3.43	11.57	7.32	0.15	12.00
	CI-NM3	CI-NM3	511+00.00	47.00	L	Curb	On Grade	0.02	0.33	0.33	2.00	1.93	1.93			15.0	3.43	11.25	7.16	0.14	12.00
	CI-NM2	CI-NM2	513+75.00	47.00	L	Curb	On Grade	0.02	0.33	0.33	2.00	2.51	2.51			15.0	3.43	12.83	7.90	0.16	12.00
	CI-NM1	CI-NM1	516+00.00	47.00	L	Curb	On Grade	0.02	0.33	0.33	2.00	5.57	5.18	0.399	CI-NM2	15.0	3.43	19.51	10.66	0.21	12.00
	* EXIST CI-A1		519+20.00	47.00	L	Curb	On Grade	0.02	0.33	0.33	2.00	8.38	5.80	2.583	CI-NM1	10.0	1.68	20.84	14.19	0.28	
SM	CI-SM6	CI-SM6	504+30.00	47.00	R	Curb	On Grade	0.02	0.33	0.33	2.00	1.21	1.21			10.0	1.19	6.76	7.34	0.15	12.00
	CI-SM5	CI-SM5	506+00.00	47.00	R	Curb	On Grade	0.02	0.33	0.33	2.00	1.91	1.91			10.0	2.22	9.98	7.74	0.16	12.00
	CI-SM4	CI-SM4	508+50.00	47.00	R	Curb	On Grade	0.02	0.33	0.33	2.00	2.96	2.96			15.0	3.43	13.96	8.41	0.17	12.00
	CI-SM3	CI-SM3	511+50.00	47.00	R	Curb	On Grade	0.02	0.33	0.33	2.00	3.24	3.24			15.0	3.43	14.63	8.70	0.17	12.00
	CI-SM2	CI-SM2	514+40.00	47.00	R	Curb	On Grade	0.02	0.33	0.33	2.00	3.20	3.20			15.0	3.43	14.53	8.66	0.17	12.00
	CI-SM1	CI-SM1	517+00.00	47.00	R	Curb	On Grade	0.02	0.33	0.33	2.00	2.38	2.28	0.104	CI-SM2	10.0	3.05	12.13	7.92	0.16	12.00
	* EXIST CI-B1		519+20.00	47.00	R	Curb	On Grade	0.02	0.33	0.33	2.00	5.35	4.41	0.942	CI-SM1	10.0	1.68	16.15	12.00	0.24	
CELINA	CI-CELINA SC LTD	CI-CELINA SC LTD	0+77.09	15.02	R	Curb	Sag	0.05	0.33	0.33	2.00	4.64	8.42			10.00		6.27	5.60	0.28	12.00
	GI-CELINA SC LTD	GI-CELINA SC LTD	0+78.11	16.23	L	Grate	On Grade	0.10				0.44	0.42	0.024	CI-CELINA SC LTD		50.00		0.91	0.09	

NW ID	Inlet ID	CURB INLET IN SAG: Ponded Width Left (ft)	Ponded Width Right (ft)	Long Slope Left (%)	Long Slope Right (%)	n	DROP INLET: No. of Grates	Grate Length (ft)	Grate Width (ft)	Grate Area (ft2)	Grate Perimeter (ft2)	Grate Area Reduction	Grate Perimeter Reduction	Allowable Head (ft)
NM	CI-NM5					0.015								
	CI-NM4					0.015								
	CI-NM3					0.015								
	CI-NM2					0.015								
	CI-NM1					0.015								
	* EXIST CI-A1					0.015								
SM	CI-SM6					0.015								
	CI-SM5					0.015								
	CI-SM4					0.015								
	CI-SM3					0.015								
	CI-SM2					0.015								
	CI-SM1					0.015								
	* EXIST CI-B1					0.015								
CELINA	CI-CELINA SC LTD	7.43	7.26	0.20	0.21	0.015								
	GI-CELINA SC LTD					0.015	1	3.00	2.00	4.62	10.00	0.50	0.50	0.417

* EXISTING INLET TO BE BUILT DURING CSJ: 0091-04-050 CONSTRUCTION

STATE OF TEXAS
NICHOLAS VON SPENCER
93702
LICENSED PROFESSIONAL ENGINEER

Nicholas V Spencer, P.E. 5-25-11
Signature of Registrant & Date

Texas Department of Transportation © 2011

STORM SEWER HYDRAULIC DATA SHEET

SHEET 13 OF 19

DESIGN	FED. RD. DIV. NO.	STATE PROJECT NO.		HIGHWAY NO.
AMW	6	(SEE TITLE SHEET)		SH 289
GRAPHICS	STATE	DISTRICT	COUNTY	SHEET NO.
AMW	TEXAS	DALLAS	COLLIN	278
CHECK	CONTROL	SECTION	JOB	
NVS	0091	04	055	
CHECK NVS				

STORM SEWER COMPUTATIONS

NW ID	Line ID	Upstream Node	Downstream Node	Size	Actual Length (ft)	Hydraulic Length (ft)	Manning's n Value	Slope (%)	Invert Upstream (ft)	Invert Downstream (ft)	Discharge (cfs)	Capacity (cfs)	Uniform Depth (ft)	Uniform Velocity (ft/s)	Freq (yr)	Actual Velocity Downstream (ft/s)	Actual Velocity Upstream (ft/s)	Actual Depth Downstream (ft)	Actual Depth Upstream (ft)
NBB	LINE NBB8	JOINT NBB3	OUTLET NBB	48 Inch Dia. Circular	45.85	45.85	0.013	1.16	699.53	699.00	118.37	166.13	2.63	13.54	5.00	9.42	9.48	4.00	3.91
	LINE NBB7	CI-NBB1	JOINT NBB3	48 Inch Dia. Circular	15.67	18.17	0.013	1.92	699.88	699.53	118.37	213.98	2.22	16.51	5.00	9.48	9.65	3.91	3.76
	LINE NBB6	CI-NBB2	CI-NBB1	48 Inch Dia. Circular	195.00	200.00	0.013	0.56	701.00	699.88	115.71	115.71	3.76	9.45	5.00	9.43	9.32	3.76	3.86
	LINE NBB5	JOINT NBB2	CI-NBB2	48 Inch Dia. Circular	68.72	71.22	0.013	1.22	701.87	701.00	113.30	170.78	2.49	13.76	5.00	9.12	9.02	3.86	4.00
	LINE NBB2	JOINT NBB1	JOINT NBB2	48 Inch Dia. Circular	127.79	127.79	0.013	3.15	705.90	701.87	113.22	274.40	1.87	19.69	5.00	9.01	9.01	4.00	4.00
	LINE NBB4	GI-NBB1	JOINT NBB2	36 Inch Dia. Circular	16.68	17.68	0.013	10.00	703.64	701.87	0.20	226.89	0.07	4.64	5.00	0.03	0.03	3.00	3.00
	LINE NBB3	GI-NBB2	JOINT NBB1	36 Inch Dia. Circular	29.40	30.40	0.013	10.00	711.38	708.34	27.10	226.89	0.73	20.53	5.00	3.83	3.83	3.00	2.99
	LINE J57 021	JOINT-J57 021	JOINT NBB1	48 Inch Dia. Circular	101.85	101.85	0.013	3.92	709.89	705.90	86.15	305.84	1.51	19.82	5.00	6.86	6.86	4.00	4.00
SBB	LINE SBB5	CI-SBB2	OUTLET SBB	36 Inch Dia. Circular	97.6	100.1	0.013	2.9	701.4	698.5	49.9	121.9	1.4	15.5	5.0	14.2	8.4	1.5	2.4
	LINE SBB4	CI-SBB1	CI-SBB2	36 Inch Dia. Circular	67.4	72.4	0.013	0.8	702.0	701.4	49.6	63.1	2.1	9.3	5.0	9.3	8.2	2.1	2.4
	LINE SBB2	JOINT SBB1	CI-SBB1	36 Inch Dia. Circular	200.7	203.2	0.013	1.2	704.4	702.0	47.8	79.0	1.8	11.1	5.0	11.0	6.8	1.8	3.0
	LINE SBB0	CI-SBB0	JOINT SBB1	36 Inch Dia. Circular	35.3	37.8	0.013	2.5	705.4	704.4	36.8	114.3	1.2	13.7	5.0	5.2	6.5	3.0	2.3
	LINE SBB1	GI-SBB1	JOINT SBB1	24 Inch Dia. Circular	42.4	43.4	0.013	0.4	705.6	705.4	11.5	15.4	1.3	5.1	5.0	3.7	3.7	2.0	2.0
	LINE J56 021	JOINT-J54	CI-SBB0	36 Inch Dia. Circular	174.5	177.0	0.013	3.1	710.8	705.4	35.8	125.8	1.1	14.6	5.0	14.2	5.1	1.2	3.0
NB	LINE NB18	JOINT NB3	OUTLET NB	36 Inch Dia. Circular	29.0	29.0	0.013	1.7	699.5	699.0	77.2	93.3	2.2	13.9	5.0	10.9	10.9	3.0	3.0
	LINE NB17	CI-NB15	JOINT NB3	36 Inch Dia. Circular	11.7	14.2	0.013	1.2	699.7	699.5	77.2	77.2	2.8	11.2	5.0	10.9	10.9	3.0	3.0
	LINE NB16	CI-NB11	CI-NB15	36 Inch Dia. Circular	48.3	53.3	0.013	1.1	700.2	699.7	75.3	75.3	2.8	10.9	5.0	10.7	10.7	3.0	3.0
	LINE NB12	CI-NB10	CI-NB11	36 Inch Dia. Circular	112.1	117.1	0.013	1.0	701.5	700.2	73.1	73.1	2.8	10.6	5.0	10.3	10.3	3.0	3.0
	LINE NB11A	JOINT NB4	CI-NB10	36 Inch Dia. Circular	70.8	73.3	0.013	1.2	702.4	701.5	69.6	80.0	2.3	11.9	5.0	9.8	9.8	3.0	3.0
	LINE NB11	CI-NB9	JOINT NB4	36 Inch Dia. Circular	62.2	64.7	0.013	1.7	703.5	702.4	57.6	92.7	1.8	13.1	5.0	8.1	8.1	3.0	3.0
	LINE NB11B	MH NB2	JOINT NB4	24 Inch Dia. Circular	10.1	11.5	0.013	9.8	703.5	702.4	12.0	76.3	0.6	16.8	5.0	3.8	3.8	2.0	2.0
	LINE NB10	CI-NB8	CI-NB9	36 Inch Dia. Circular	107.0	112.0	0.013	2.2	705.9	703.5	54.3	107.0	1.6	14.4	5.0	7.7	7.9	3.0	2.8
	LINE NB9	CI-NB7	CI-NB8	30 Inch Dia. Circular	107.0	112.0	0.013	2.6	708.9	705.9	51.4	71.1	1.7	14.9	5.0	14.2	10.5	1.7	2.5
	LINE NB8D	JOINT NB2A	CI-NB7	30 Inch Dia. Circular	73.8	76.3	0.013	3.7	711.6	708.9	48.6	84.3	1.4	16.8	5.0	15.1	9.9	1.6	2.5
	LINE NB8B	JOINT NB2	JOINT NB2A	30 Inch Dia. Circular	76.6	76.6	0.013	3.3	714.2	711.6	43.6	80.1	1.4	15.8	5.0	14.2	8.9	1.5	2.5
	LINE CR 98B	JOINT NB2B	JOINT NB2A	24 Inch Dia. Circular	31.6	31.6	0.013	10.0	714.8	711.6	5.0	77.0	0.4	13.1	5.0	12.1	3.6	0.4	0.9
	LINE NB8	JOINT NB1	JOINT NB2	30 Inch Dia. Circular	41.0	41.0	0.013	0.4	714.3	714.2	25.6	27.9	2.0	6.0	5.0	5.2	5.2	2.5	2.5
	LINE NB8A	EXIST CR98 30"	JOINT NB2	36 Inch Dia. Circular	16.3	18.3	0.013	10.0	716.0	714.2	18.0	226.9	0.6	18.2	5.0	12.8	3.7	0.8	2.0
	LINE CR 98A	CI-CR 98	JOINT NB2B	24 Inch Dia. Circular	45.8	48.3	0.013	6.6	718.0	714.8	5.0	62.6	0.4	11.3	5.0	10.9	2.8	0.4	1.1
	LINE NB6	CI-NB6	JOINT NB1	30 Inch Dia. Circular	25.5	28.0	0.013	2.6	715.1	714.3	17.8	70.7	0.9	11.4	5.0	3.6	3.6	2.5	2.5
	LINE NB7	GI-NB1	JOINT NB1	24 Inch Dia. Circular	26.5	27.5	0.013	10.0	717.1	714.3	7.8	77.0	0.4	14.9	5.0	12.8	3.2	0.5	1.5
	LINE NB5	CI-NB5	CI-NB6	30 Inch Dia. Circular	45.0	50.0	0.013	2.6	716.3	715.1	13.5	70.9	0.8	10.6	5.0	2.8	3.9	2.5	1.7
	LINE NB4	CI-NB4	CI-NB5	24 Inch Dia. Circular	45.0	50.0	0.013	3.6	718.1	716.3	10.8	46.0	0.7	11.4	5.0	10.5	5.3	0.7	1.2
	LINE NB3	CI-NB3	CI-NB4	24 Inch Dia. Circular	45.0	50.0	0.013	2.4	719.3	718.1	8.3	37.4	0.7	9.1	5.0	8.6	4.7	0.7	1.1
	LINE NB2	CI-NB2	CI-NB3	24 Inch Dia. Circular	40.0	45.0	0.013	2.1	720.2	719.3	6.1	35.0	0.6	7.9	5.0	7.6	4.1	0.6	1.0
	LINE NB1	CI-NB1	CI-NB2	24 Inch Dia. Circular	112.0	117.0	0.013	1.6	722.1	720.2	3.3	30.5	0.5	6.0	5.0	6.0	2.1	0.5	1.0
SB	LINE SB6	CI-SB6	OUTLET SB	24 Inch Dia. Circular	11.9	14.4	0.013	6.5	699.4	698.5	14.0	62.2	0.7	15.1	5.0	10.7	5.8	0.9	1.4
	LINE SB5	CI-SB5	CI-SB6	24 Inch Dia. Circular	193.2	198.2	0.013	1.7	702.9	699.4	11.8	32.1	0.9	9.0	5.0	8.9	5.6	0.9	1.3
	LINE SB4	CI-SB4	CI-SB5	24 Inch Dia. Circular	207.0	212.0	0.013	1.9	706.9	702.9	10.1	33.6	0.8	8.9	5.0	8.9	5.1	0.8	1.2
	LINE SB3	CI-SB3	CI-SB4	24 Inch Dia. Circular	299.7	304.7	0.013	2.4	714.3	706.9	7.2	37.9	0.6	8.8	5.0	8.8	4.5	0.6	1.0
	LINE SB2	CI-SB2	CI-SB3	24 Inch Dia. Circular	147.3	152.3	0.013	2.9	718.7	714.3	4.6	41.2	0.5	8.2	5.0	8.2	3.8	0.5	0.8
	LINE SB1	CI-SB1	CI-SB2	24 Inch Dia. Circular	190.0	195.0	0.013	1.8	722.2	718.7	2.0	32.4	0.4	5.5	5.0	5.5	1.3	0.4	1.0
NCC	LINE NCC20	JOINT NCC2	OUTLET NCC	42 Inch Dia. Circular	135.9	135.9	0.013	1.9	689.5	687.0	80.7	148.5	1.9	14.9	5.0	14.0	8.4	2.0	3.5
	LINE NCC19	CI-NCC18	JOINT NCC2	42 Inch Dia. Circular	41.8	44.3	0.013	1.2	690.1	689.5	64.9	118.6	1.9	11.9	5.0	6.7	6.7	3.5	3.5
	LINE NCCG1B	GI-NCC1B	JOINT NCC2	36 Inch Dia. Circular	17.8	17.8	0.013	8.1	691.0	689.5	15.9	204.2	0.6	16.3	5.0	2.2	2.2	3.0	3.0
	LINE NCC18	CI-NCC17	CI-NCC18	42 Inch Dia. Circular	47.5	52.5	0.013	0.4	690.3	690.1	62.4	68.4	2.8	7.5	5.0	6.5	6.5	3.5	3.5
	LINE NCC17	CI-NCC16	CI-NCC17	42 Inch Dia. Circular	47.5	52.5	0.013	0.4	690.5	690.3	60.1	68.4	2.7	7.5	5.0	6.2	6.2	3.5	3.5
	LINE NCC16	CI-NCC15	CI-NCC16	42 Inch Dia. Circular	47.5	52.5	0.013	0.4	690.7	690.5	57.6	68.4	2.6	7.5	5.0	6.0	6.0	3.5	3.5
	LINE NCC15	CI-NCC14	CI-NCC15	42 Inch Dia. Circular	47.5	52.5	0.013	0.5	691.0	690.7	55.1	79.0	2.3	8.4	5.0	5.7	5.7	3.5	3.5
	LINE NCC14	CI-NCC13	CI-NCC14	42 Inch Dia. Circular	45.0	50.0	0.013	1.9	691.4	690.5	52.5	147.6	1.5	13.3	5.0	5.5	5.5	3.5	3.5
	LINE NCC13	CI-NCC12	CI-NCC13	30 Inch Dia. Circular	45.0	50.0	0.013	2.2	693.0	691.9	50.0	64.8	1.7	13.7	5.0	10.2	10.2	2.5	2.5
	LINE NCC12	CI-NCC11	CI-NCC12	30 Inch Dia. Circular	95.0	100.0	0.013	1.6	694.6	693.0	45.2	56.3	1.8	12.0	5.0	9.2	9.2	2.5	2.5
	LINE NCC11	CI-NCC10	CI-NCC11	30 Inch Dia. Circular	95.0	100.0	0.013	2.3	696.9	694.6	40.8	66.2	1.5	13.4	5.0	12.7	8.8	1.6	2.2
	LINE NCC10	CI-NCC9	CI-NCC10	30 Inch Dia. Circular	95.0	100.0	0.013	2.9	699.7	696.9	35.9	74.6	1.3	14.2	5.0	13.4	8.0	1.3	2.2
	LINE NCC9	JOINT NCC1	CI-NCC9	30 Inch Dia. Circular	47.5	50.0	0.013	2.4	700.9	699.7	31.8	67.8	1.3	12.9	5.0	11.4	6.5	1.4	2.5
	LINE NCC8	CI-NCC8	JOINT NCC1	30 Inch Dia. Circular	147.5	150.0	0.013	3.8	706.6	700.9	26.4	86.0	1.0	14.6	5.0	14.3	6.8	1.0	1.9
	LINE NCC4A	GI-NCC1A	JOINT NCC1	18 Inch Dia. Circular	17.1	17.1	0.013	6.2	702.0	700.9	5.4	28.2	0.5	11.7	5.0	3.1	3.1	1.5	1.5
	LINE NCC7	CI-NCC7	CI-NCC8	30 Inch Dia. Circular	95.0	100.0	0.013	3.5	710.1	706.6	22.6	82.2	0.9	13.6	5.0	12.9	6.4	1.0	1.7
	LINE NCC6	CI-NCC6	CI-NCC7	30 Inch Dia. Circular	95.0	100.0	0.013	3.4	713.5	710.1	18.7	80.9	0.8	12.7	5.0	12.2	5.8	0.9	1.6
	LINE NCC5	CI-NCC5	CI-NCC6	30 Inch Dia. Circular	95.0	100.0	0.013	2.8	716.2	713.5	14.3	73.7	0.8	11.0	5.0	10.7	5.2	0.8	1.4

STATE OF TEXAS
NICHOLAS VON SPENCER
93702
LICENSED PROFESSIONAL ENGINEER

Signature of Registrant , P.E. & Date 5-25-11

Texas Department of Transportation
© 2011

STORM SEWER HYDRAULIC DATA SHEET

SHEET 14 OF 19

DESIGN	FED. RD. DIV. NO.	STATE PROJECT NO.		HIGHWAY NO.
AMW	6	(SEE TITLE SHEET)		SH 289
GRAPHICS AMW	STATE	DISTRICT	COUNTY	SHEET NO.
CHECK NVS	TEXAS	DALLAS	COLLIN	279
CHECK NVS	CONTROL 0091	SECTION 04	JOB 055	

T:\DALDGN*A\SH 289 Celina\THE PLANS\Drainage Storm Sewer\Drainage Computation Sheets\hydraulicdatasheets.dgn 5/22/2011 9:45:34 AM

STORM SEWER COMPUTATIONS

NW ID	Line ID	Upstream Node	Downstream Node	Size	Actual Length (ft)	Hydraulic Length (ft)	Manning's n Value	Slope (%)	Invert Upstream (ft)	Invert Downstream (ft)	Discharge (cfs)	Capacity (cfs)	Uniform Depth (ft)	Uniform Velocity (ft/s)	Freq (yr)	Actual Velocity Downstream (ft/s)	Actual Velocity Upstream (ft/s)	Actual Depth Downstream (ft)	Actual Depth Upstream (ft)
NCC (CONT.)	LINE NCC4	CI-NCC4	CI-NCC5	30 Inch Dia. Circular	95.0	100.0	0.013	2.2	718.4	716.2	10.5	64.7	0.7	9.2	5.0	9.1	4.8	0.7	1.1
	LINE NCC3	CI-NCC3	CI-NCC4	30 Inch Dia. Circular	77.7	82.7	0.013	1.6	719.7	718.4	8.0	56.0	0.7	7.7	5.0	7.6	4.4	0.7	1.0
	LINE NCC2	CI-NCC2	CI-NCC3	30 Inch Dia. Circular	88.0	93.0	0.013	1.5	721.1	719.7	5.6	53.4	0.6	6.7	5.0	6.6	3.8	0.6	0.8
	LINE NCC1	CI-NCC1	CI-NCC2	30 Inch Dia. Circular	111.9	116.9	0.013	1.1	722.3	721.1	2.6	45.8	0.4	4.8	5.0	4.8	1.1	0.4	1.3
SCC	LINE SCC8	CI-SCC8	OUTLET SCC	24 Inch Dia. Circular	177.4	179.9	0.013	0.4	687.7	687.0	10.5	15.4	1.3	5.0	5.0	3.3	3.9	2.0	1.6
	LINE SCC7	CI-SCC7	CI-SCC8	24 Inch Dia. Circular	205.0	210.0	0.013	0.7	689.1	687.7	9.5	19.9	1.0	5.9	5.0	5.9	5.2	1.0	1.1
	LINE SCC6	CI-SCC6	CI-SCC7	24 Inch Dia. Circular	195.0	200.0	0.013	3.0	695.1	689.1	8.2	42.1	0.6	9.9	5.0	9.8	4.9	0.6	1.1
	LINE SCC5	CI-SCC5	CI-SCC6	24 Inch Dia. Circular	195.0	200.0	0.013	2.6	700.2	695.1	7.0	38.9	0.6	8.9	5.0	8.9	4.6	0.6	1.0
	LINE SCC4	CI-SCC4	CI-SCC5	24 Inch Dia. Circular	195.0	200.0	0.013	3.4	707.1	700.2	5.8	45.1	0.5	9.4	5.0	9.4	4.3	0.5	0.9
	LINE SCC3	CI-SCC3	CI-SCC4	24 Inch Dia. Circular	195.0	200.0	0.013	3.4	714.0	707.1	4.5	45.0	0.4	8.7	5.0	8.7	3.9	0.4	0.8
	LINE SCC2	CI-SCC2	CI-SCC3	24 Inch Dia. Circular	185.0	190.0	0.013	2.5	718.7	714.0	3.3	38.5	0.4	7.1	5.0	7.1	3.5	0.4	0.7
	LINE SCC1	CI-SCC1	CI-SCC2	24 Inch Dia. Circular	180.7	185.7	0.013	1.6	721.6	718.7	1.9	30.3	0.4	5.1	5.0	5.1	1.2	0.4	1.0
NC	LINE NC20	JOINT NC19	OUTLET NC	4ft x 8ft Box	45.4	45.4	0.013	0.3	686.7	686.6	230.3	313.8	3.2	9.1	5.0	7.2	7.4	4.0	3.9
	LAT NC13	CI-NC13	JOINT NC19	24 Inch Dia. Circular	7.5	9.0	0.013	10.0	689.6	688.7	2.3	77.0	0.2	10.4	5.0	0.7	1.4	1.9	1.0
	LINE NC19	JOINT NC18	JOINT NC19	4ft x 8ft Box	104.3	104.3	0.012	0.3	687.0	686.7	228.7	339.9	3.0	9.6	5.0	7.3	7.9	3.9	3.6
	LAT NC12	CI-NC12	JOINT NC18	24 Inch Dia. Circular	7.5	9.0	0.013	10.0	689.9	689.0	1.0	77.0	0.2	8.0	5.0	0.4	0.6	1.6	1.0
	LINE NC18	JOINT NC17	JOINT NC18	4ft x 8ft Box	255.2	255.2	0.012	0.3	687.8	687.0	228.4	340.0	3.0	9.6	5.0	7.9	7.1	3.6	4.0
	LAT CTC B	CTC MH B	JOINT NC17	48 Inch Dia. Circular	20.6	23.0	0.013	11.3	690.4	687.8	59.0	519.5	0.9	26.0	5.0	16.3	5.1	1.3	3.5
	LINE NC17	JOINT NC16	JOINT NC17	4ft x 7ft Box	66.0	66.0	0.012	0.3	688.0	687.8	169.6	284.0	2.7	8.9	5.0	6.1	6.1	4.0	4.0
	LAT NC11	CI-NC11	JOINT NC16	24 Inch Dia. Circular	7.5	9.0	0.013	10.0	688.9	688.0	2.4	77.0	0.2	10.5	5.0	0.8	0.8	2.0	2.0
	LINE NC16	JOINT NC15	JOINT NC16	4ft x 7ft Box	153.3	153.3	0.012	0.3	688.5	688.0	168.0	284.1	2.7	9.0	5.0	6.0	6.0	4.0	4.0
	LINE NC15	JOINT NC14	JOINT NC15	4ft x 7ft Box	46.7	46.7	0.012	0.3	688.6	688.5	158.8	284.1	2.6	8.7	5.0	5.7	5.7	4.0	4.0
	LAT GI-NC4	GI-NC4	JOINT NC15	24 Inch Dia. Circular	25.8	26.8	0.013	0.4	688.6	688.5	11.1	14.9	1.3	4.9	5.0	3.5	3.5	2.0	2.0
	LAT NC10	CI-NC10	JOINT NC14	24 Inch Dia. Circular	7.5	9.0	0.013	10.0	689.5	688.6	1.6	77.0	0.2	9.3	5.0	0.5	0.5	2.0	2.0
	LINE NC14	JOINT NC13	JOINT NC14	4ft x 7ft Box	109.8	109.8	0.012	0.3	688.9	688.6	157.7	272.1	2.7	8.5	5.0	5.6	5.7	4.0	3.9
	LAT CTC A	CTC MH A	JOINT NC13	48 Inch Dia. Circular	22.6	25.0	0.013	6.0	690.4	688.9	131.0	377.7	1.7	25.9	5.0	16.4	10.4	2.4	4.0
	LINE NC12	JOINT NC12	JOINT NC13	2ft x 3ft Box	38.0	38.0	0.012	0.4	689.1	688.9	26.8	41.9	1.4	6.3	5.0	4.5	4.5	2.0	2.0
	LINE NC11	JOINT NC11	JOINT NC12	2ft x 3ft Box	73.4	73.4	0.012	0.4	689.4	689.1	24.6	41.9	1.3	6.2	5.0	4.1	4.1	2.0	2.0
	LAT GI-NC3	GI-NC3	JOINT NC12	24 Inch Dia. Circular	25.8	26.8	0.013	0.9	690.3	690.1	2.8	22.7	0.5	4.7	5.0	0.9	0.9	2.0	2.0
	LAT NC9	CI-NC9	JOINT NC11	24 Inch Dia. Circular	7.5	9.5	0.013	10.0	690.3	689.4	4.4	77.0	0.3	12.6	5.0	1.4	1.4	2.0	2.0
	LINE NC10	JOINT NC10	JOINT NC11	2ft x 3ft Box	72.9	72.9	0.012	0.4	689.7	689.4	21.0	41.9	1.2	6.0	5.0	3.5	3.5	2.0	2.0
	LAT NC8	CI-NC8	JOINT NC10	24 Inch Dia. Circular	7.5	9.5	0.013	10.0	690.6	689.7	2.7	77.0	0.3	10.9	5.0	0.9	0.9	2.0	2.0
	LINE NC9	JOINT NC9	JOINT NC10	2ft x 3ft Box	104.6	104.6	0.012	0.4	690.1	689.7	18.9	41.9	1.1	5.8	5.0	3.1	3.1	2.0	2.0
	LAT NC7	CI-NC7	JOINT NC9	24 Inch Dia. Circular	7.5	9.5	0.013	10.0	691.0	690.1	2.2	77.0	0.2	10.3	5.0	0.7	0.7	2.0	2.0
	LINE NC8	JOINT NC8	JOINT NC9	2ft x 3ft Box	86.8	86.8	0.012	0.4	690.4	690.1	17.1	41.9	1.0	5.6	5.0	2.9	2.9	2.0	2.0
	LINE NC7	JOINT NC7	JOINT NC8	2ft x 3ft Box	48.2	48.2	0.012	0.4	690.6	690.4	14.8	41.9	0.9	5.4	5.0	2.5	2.5	2.0	2.0
	LAT GI-NC2	GI-NC2	JOINT NC8	24 Inch Dia. Circular	24.9	24.9	0.013	3.6	691.3	690.4	2.8	46.3	0.3	7.7	5.0	0.9	0.9	2.0	2.0
	LAT NC6	CI-NC6	JOINT NC7	24 Inch Dia. Circular	7.5	9.3	0.013	10.0	691.5	690.6	2.5	77.0	0.3	10.7	5.0	0.8	0.8	2.0	2.0
	LINE NC6	JOINT NC6	JOINT NC7	2ft x 3ft Box	86.0	86.0	0.012	0.4	691.0	690.6	12.7	41.9	0.8	5.2	5.0	2.1	2.1	2.0	2.0
	LAT NC5	CI-NC5	JOINT NC6	24 Inch Dia. Circular	7.5	9.3	0.013	10.0	691.9	691.0	2.5	77.0	0.3	10.7	5.0	0.8	0.8	2.0	2.0
	LINE NC5	JOINT NC5	JOINT NC6	2ft x 3ft Box	76.5	76.5	0.012	1.5	692.1	691.0	10.5	80.2	0.5	7.5	5.0	1.8	1.8	2.0	2.0
	LAT NC4	CI-NC4	JOINT NC5	24 Inch Dia. Circular	7.5	9.0	0.013	10.0	693.0	692.1	2.8	77.0	0.3	11.0	5.0	0.9	1.5	2.0	1.2
	LINE NC4	JOINT NC4	JOINT NC5	2ft x 3ft Box	101.5	101.5	0.012	0.6	692.7	692.1	8.1	51.3	0.5	5.1	5.0	1.4	1.8	2.0	1.5
	LAT NC3	CI-NC3	JOINT NC4	24 Inch Dia. Circular	7.5	9.0	0.013	8.9	693.5	692.7	1.9	72.7	0.2	9.5	5.0	0.8	1.2	1.5	1.0
	LINE NC3	JOINT NC3	JOINT NC4	2ft x 3ft Box	62.0	62.0	0.012	0.6	693.1	692.7	6.4	51.3	0.5	4.7	5.0	1.4	1.8	1.5	1.2
	LINE NC2	JOINT NC2	JOINT NC3	2ft x 3ft Box	56.0	56.0	0.012	0.6	693.4	693.1	4.3	51.3	0.3	4.2	5.0	1.2	1.7	1.2	0.9
	LAT GI-NC1	GI-NC1	JOINT NC3	24 Inch Dia. Circular	25.0	25.0	0.013	2.9	693.8	693.1	2.5	41.7	0.3	6.9	5.0	6.5	1.6	0.4	1.0
	LAT NC2	CI-NC2	JOINT NC2	24 Inch Dia. Circular	7.5	9.0	0.013	7.3	694.1	693.4	2.5	65.7	0.3	9.5	5.0	7.5	1.6	0.3	1.0
	LINE NC1	JOINT NC1	JOINT NC2	2ft x 3ft Box	61.0	61.0	0.012	0.6	693.8	693.4	1.8	51.3	0.2	3.0	5.0	0.7	1.1	0.9	0.6
	LAT NC1	CI-NC1	JOINT NC1	24 Inch Dia. Circular	7.5	9.0	0.013	6.0	694.3	693.8	1.8	59.6	0.3	8.1	5.0	6.7	1.2	0.3	1.0
SC	LINE SC8	CI-SC8	OUTLET SC	24 Inch Dia. Circular	43.2	45.7	0.013	0.4	686.8	686.6	11.2	15.4	1.3	5.1	5.0	3.6	3.6	2.0	1.9
	LINE SC7	CI-SC7	CI-SC8	24 Inch Dia. Circular	43.4	48.4	0.013	0.4	687.0	686.8	9.4	15.4	1.2	4.9	5.0	3.0	3.1	1.9	1.8
	LINE SC6A	MH SC1	CI-SC7	24 Inch Dia. Circular	206.0	210.0	0.013	0.4	687.8	687.0	8.5	15.4	1.1	4.7	5.0	2.8	4.2	1.8	1.2
	LINE SC6	CI-SC6	MH SC1	24 Inch Dia. Circular	163.3	167.3	0.013	0.4	688.5	687.8	8.5	15.4	1.1	4.7	5.0	4.2	4.5	1.2	1.2
	LINE SC5	CI-SC5	CI-SC6	24 Inch Dia. Circular	268.7	273.7	0.013	0.3	689.3	688.5	7.6	13.4	1.1	4.2	5.0	4.0	4.0	1.2	1.2
	LINE SC4	CI-SC4	CI-SC5	24 Inch Dia. Circular	142.5	147.5	0.013	0.4	689.9	689.3	6.0	15.4	0.9	4.4	5.0	3.1	4.0	1.2	1.0
	LINE SC3	CI-SC3	CI-SC4	24 Inch Dia. Circular	172.5	177.5	0.013	0.4	690.6	689.9	4.0	15.4	0.7	3.9	5.0	2.7	3.6	1.0	0.8
	LINE SC2	CI-SC2	CI-SC3	24 Inch Dia. Circular	195.0	200.0	0.013	0.5	691.6	690.6	2.9	16.7	0.6	3.8	5.0	3.8	3.4	0.6	0.6
	LINE SC1	CI-SC1	CI-SC2	24 Inch Dia. Circular	190.0	195.0	0.013	0.5	692.5	691.6	1.7	16.6	0.4	3.2	5.0	3.2	1.1	0.4	1.0
ND	LINE ND17	CI-ND14	OUTLET ND	36 Inch Dia. Circular	52.6	55.1	0.013	0.4	675.7	675.5	41.1	44.3	2.5	6.6	5.0	5.8	5.8	3.0	3.0
	LINE ND16	MH NG2	CI-ND14	36 Inch Dia. Circular	116.2	120.2	0.013	0.3	676.1	675.7	40.8	42.0	2.6	6.2	5.0	5.8	5.8	3.0	3.0

STATE OF TEXAS
NICHOLAS VON SPENCER
93702
LICENSED PROFESSIONAL ENGINEER

Signature of Registrant , P.E. & Date 5-25-11

Texas Department of Transportation
© 2011

STORM SEWER HYDRAULIC DATA SHEET

SHEET 15 OF 19

DESIGN	FED. RD. DIV. NO.	STATE PROJECT NO.		HIGHWAY NO.
AMW	6	(SEE TITLE SHEET)		SH 289
GRAPHICS AMW	STATE	DISTRICT	COUNTY	SHEET NO.
CHECK NVS	TEXAS	DALLAS	COLLIN	280
CHECK NVS	CONTROL 0091	SECTION 04	JOB 055	

STORM SEWER COMPUTATIONS

NW ID	Line ID	Upstream Node	Downstream Node	Size	Actual Length (ft)	Hydraulic Length (ft)	Manning's n Value	Slope (%)	Invert Upstream (ft)	Invert Downstream (ft)	Discharge (cfs)	Capacity (cfs)	Uniform Depth (ft)	Uniform Velocity (ft/s)	Freq (yr)	Actual Velocity Downstream (ft/s)	Actual Velocity Upstream (ft/s)	Actual Depth Downstream (ft)	Actual Depth Upstream (ft)
ND (CONT.)	LINE ND15	MH NG1	MH NG2	36 Inch Dia. Circular	175.6	178.6	0.013	0.4	676.8	676.1	40.8	45.4	2.4	6.8	5.0	5.8	5.8	3.0	3.0
	LINE ND14	CI-ND13	MH NG1	36 Inch Dia. Circular	177.5	180.0	0.013	0.4	677.6	676.8	40.8	45.4	2.4	6.8	5.0	5.8	5.8	3.0	3.0
	LINE ND12	GI-ND1A	CI-ND13	36 Inch Dia. Circular	11.0	14.5	0.013	10.0	679.0	677.6	6.9	226.9	0.4	13.7	5.0	1.0	1.5	3.0	1.9
	LINE ND13	CI-ND12	CI-ND13	36 Inch Dia. Circular	111.0	116.0	0.013	0.4	678.0	677.6	36.6	45.4	2.2	6.7	5.0	5.2	5.2	3.0	3.0
	LINE ND10	CI-ND11	CI-ND12	36 Inch Dia. Circular	143.7	148.7	0.013	0.6	678.9	678.0	33.4	54.2	1.8	7.6	5.0	4.7	4.7	3.0	3.0
	LINE ND11	GI-ND1B	CI-ND12	36 Inch Dia. Circular	12.8	15.3	0.013	9.5	679.5	678.0	13.5	220.9	0.5	16.4	5.0	1.9	2.1	3.0	2.6
	LINE ND9	CI-ND10	CI-ND11	36 Inch Dia. Circular	109.9	114.9	0.013	1.2	680.2	678.9	31.4	77.5	1.4	9.8	5.0	4.4	5.0	3.0	2.5
	LINE ND8	CI-ND9	CI-ND10	36 Inch Dia. Circular	118.0	123.0	0.013	1.2	681.7	680.2	28.0	77.6	1.3	9.6	5.0	9.4	6.4	1.3	1.8
	LINE ND7	CI-ND8	CI-ND9	24 Inch Dia. Circular	104.7	109.7	0.013	1.2	683.9	682.7	23.9	26.3	1.6	8.9	5.0	8.9	7.9	1.6	1.9
	LINE ND6A	CI-ND7	CI-ND8	24 Inch Dia. Circular	45.0	50.0	0.013	1.2	684.5	683.9	21.0	26.2	1.4	8.7	5.0	6.9	7.3	1.9	1.7
	LINE ND6	CI-ND6	CI-ND7	24 Inch Dia. Circular	80.0	85.0	0.013	1.2	685.5	684.5	17.9	26.1	1.3	8.4	5.0	8.4	6.7	1.3	1.6
	LINE ND5	CI-ND5	CI-ND6	24 Inch Dia. Circular	80.0	85.0	0.013	1.2	686.5	685.5	15.0	26.3	1.1	8.2	5.0	8.1	6.1	1.1	1.5
	LINE ND4	CI-ND4	CI-ND5	24 Inch Dia. Circular	120.0	125.0	0.013	1.2	687.9	686.5	11.6	26.2	1.0	7.7	5.0	7.6	5.4	1.0	1.3
	LINE ND3	CI-ND3	CI-ND4	24 Inch Dia. Circular	120.0	125.0	0.013	1.2	689.4	687.9	9.0	26.2	0.8	7.2	5.0	7.2	5.0	0.8	1.1
	LINE ND2	CI-ND2	CI-ND3	24 Inch Dia. Circular	95.0	100.0	0.013	1.2	690.5	689.4	7.4	26.2	0.8	6.8	5.0	6.8	4.6	0.8	1.0
	LINE ND1	CI-ND1	CI-ND2	24 Inch Dia. Circular	94.9	99.9	0.013	1.2	691.7	690.5	5.6	26.2	0.7	6.3	5.0	6.3	4.1	0.7	0.9
	LINE ND0	CI-ND0	CI-ND1	24 Inch Dia. Circular	103.4	108.4	0.013	1.0	692.8	691.7	3.1	24.4	0.5	5.1	5.0	5.1	2.0	0.5	1.0
SD	LINE SD11	CI-SD0	OUTLET SD	27 Inch Dia. Circular	61.1	63.6	0.013	0.4	676.4	676.1	12.6	21.1	1.3	5.2	5.0	3.2	3.3	2.3	2.1
	LINE SD10	MH SD2	CI-SD0	27 Inch Dia. Circular	107.1	111.1	0.013	0.4	676.8	676.4	11.2	21.1	1.2	5.1	5.0	2.9	3.4	2.1	1.8
	LINE SD9	MH SD1	MH SD2	27 Inch Dia. Circular	190.8	193.8	0.013	0.4	677.6	676.8	11.2	21.1	1.2	5.1	5.0	3.4	4.9	1.8	1.3
	LINE SD8	CI-SD1	MH SD1	27 Inch Dia. Circular	177.6	181.6	0.013	0.4	678.3	677.6	11.2	21.1	1.2	5.1	5.0	4.9	4.8	1.3	1.3
	LINE SD7	CI-SD2	CI-SD1	27 Inch Dia. Circular	113.0	118.0	0.013	0.4	678.8	678.3	9.3	21.1	1.1	4.9	5.0	4.0	4.6	1.3	1.1
	LINE SD6	CI-SD3	CI-SD2	27 Inch Dia. Circular	146.3	151.3	0.013	0.6	679.6	678.8	7.7	25.0	0.9	5.2	5.0	5.2	4.6	0.9	1.0
	LINE SD5	CI-SD4	CI-SD3	24 Inch Dia. Circular	237.0	242.0	0.013	1.3	682.7	679.6	6.4	27.2	0.7	6.7	5.0	6.7	4.4	0.7	0.9
	LINE SD4	CI-SD5	CI-SD4	24 Inch Dia. Circular	155.3	160.3	0.013	1.2	684.5	682.7	5.4	26.2	0.6	6.2	5.0	6.2	4.1	0.6	0.9
	LINE SD3	CI-SD6	CI-SD5	24 Inch Dia. Circular	165.0	170.0	0.013	1.2	686.5	684.5	4.3	26.2	0.6	5.9	5.0	5.9	3.8	0.6	0.8
	LINE SD2	CI-SD7	CI-SD6	24 Inch Dia. Circular	245.0	250.0	0.013	1.2	689.4	686.5	2.8	26.2	0.5	5.2	5.0	5.2	3.3	0.5	0.6
	LINE SD1	CI-SD8	CI-SD7	24 Inch Dia. Circular	194.9	199.9	0.013	1.2	691.7	689.4	1.5	26.2	0.3	4.3	5.0	4.3	0.9	0.3	1.0
NGG	LINE NGG7	CI-NGG1	OUTLET NGG	42 Inch Dia. Circular	38.4	40.9	0.013	1.2	670.2	669.7	12.8	117.8	0.8	7.6	5.0	1.3	1.4	3.5	3.0
	LINE NGG6	CI-NGG2	CI-NGG1	42 Inch Dia. Circular	142.9	147.9	0.013	0.4	670.8	670.2	11.8	68.4	1.0	5.1	5.0	1.3	1.6	3.0	2.5
	LINE NGG5	CI-NGG3	CI-NGG2	36 Inch Dia. Circular	294.7	299.7	0.013	0.6	672.5	670.8	11.1	54.0	1.0	5.7	5.0	5.7	4.8	1.0	1.1
	LINE NGG4	CI-NGG4	CI-NGG3	36 Inch Dia. Circular	292.4	297.4	0.013	0.4	673.7	672.5	10.4	45.4	1.0	5.0	5.0	5.0	4.7	1.0	1.1
	LINE NGG3	CI-NGG5	CI-NGG4	36 Inch Dia. Circular	292.4	297.4	0.013	0.4	674.9	673.7	9.6	45.4	1.0	4.9	5.0	4.8	1.9	1.0	2.1
	LINE NGG1	CI-NGG6	CI-NGG5	36 Inch Dia. Circular	136.4	141.4	0.013	1.3	676.7	674.9	2.4	82.0	0.4	4.9	5.0	4.9	0.7	0.4	1.5
	LINE NGG2	GI-NGG1A	CI-NGG5	36 Inch Dia. Circular	16.3	19.3	0.013	0.4	674.9	674.9	8.2	45.4	0.9	4.6	5.0	1.6	1.6	2.1	2.0
SGG	LINE SGG6	CI-SGG1	OUTLET SGG	24 Inch Dia. Circular	38.4	40.9	0.013	3.5	672.3	670.9	10.1	45.3	0.7	11.0	5.0	9.9	5.1	0.7	1.2
	LINE SGG5	CI-SGG2	CI-SGG1	27 Inch Dia. Circular	142.9	147.9	0.013	0.2	672.6	672.3	8.0	16.0	1.2	3.8	5.0	3.7	3.7	1.2	1.2
	LINE SGG4	CI-SGG3	CI-SGG2	24 Inch Dia. Circular	295.3	300.3	0.013	0.5	674.1	672.6	6.5	16.9	0.9	4.8	5.0	4.8	4.3	0.9	1.0
	LINE SGG3	CI-SGG4	CI-SGG3	24 Inch Dia. Circular	297.5	302.5	0.013	0.4	675.3	674.1	4.9	15.4	0.8	4.1	5.0	3.3	3.7	1.0	0.9
	LINE SGG2	CI-SGG5	CI-SGG4	24 Inch Dia. Circular	297.5	302.5	0.013	0.4	676.5	675.3	3.1	15.4	0.6	3.6	5.0	2.4	3.3	0.9	0.7
	LINE SGG1	CI-SGG6	CI-SGG5	24 Inch Dia. Circular	138.8	143.8	0.013	1.0	677.9	676.5	2.1	24.2	0.4	4.5	5.0	4.5	1.4	0.4	1.0
NG	LINE NG6	JOINT J2NG	OUTLET NG	27 Inch Dia. Circular	25.3	25.3	0.013	5.5	671.8	670.4	19.2	78.2	0.8	15.4	5.0	11.9	4.8	1.0	2.3
	LINE NG4	GI-NG1C	JOINT J2NG	24 Inch Dia. Circular	24.1	25.1	0.013	2.5	672.4	671.8	12.6	38.2	0.8	10.3	5.0	4.0	4.0	2.0	2.0
	LINE NG2	CI-NG1	JOINT J2NG	27 Inch Dia. Circular	154.4	156.9	0.013	0.4	672.4	671.8	7.1	21.1	0.9	4.5	5.0	1.8	1.9	2.3	2.0
	LINE NG1	GI-NG1A	CI-NG1	24 Inch Dia. Circular	62.6	69.0	0.013	0.8	673.0	672.4	6.6	21.2	0.8	5.6	5.0	2.1	2.4	2.0	1.6
SG	LINE SG1	CI-SG1	OUTLET SG	24 Inch Dia. Circular	179.8	182.3	0.013	1.1	672.9	670.9	1.1	25.7	0.3	3.9	5.0	3.9	0.7	0.3	1.0
NHH	LINE NHH3	CI-NHH3	OUTLET NHH	24 Inch Dia. Circular	108.6	111.1	0.013	1.83	672.42	670.39	3.43	32.88	0.45	6.43	5	6.42	3.58	0.45	0.69
	LINE NHH2	CI-NHH2	CI-NHH3	24 Inch Dia. Circular	195.0	200.0	0.013	0.40	673.22	672.42	2.26	15.39	0.54	3.34	5	2.36	3.00	0.69	0.58
	LINE NHH1	CI-NHH1	CI-NHH2	24 Inch Dia. Circular	195.0	200.0	0.013	0.90	675.02	673.22	0.99	23.09	0.29	3.48	5	3.48	0.63	0.29	1.00
SHH	LINE SHH3	CI-SHH3	OUTLET SHH	24 Inch Dia. Circular	108.5	111.0	0.013	1.98	672.42	670.21	3.71	34.28	0.46	6.79	5	6.76	3.65	0.46	0.72
	LINE SHH2	CI-SHH2	CI-SHH3	24 Inch Dia. Circular	195.0	200.0	0.013	0.40	673.22	672.42	2.35	15.39	0.55	3.34	5	2.31	3.01	0.72	0.59
	LINE SHH1	CI-SHH1	CI-SHH2	24 Inch Dia. Circular	195.0	200.0	0.013	0.90	675.02	673.22	0.99	23.09	0.29	3.48	5	3.48	0.63	0.29	1.00
NH	LINE NH10	CI-NH10	OUTLET NH	30 Inch Dia. Circular	47.3	49.8	0.013	0.67	670.22	669.89	24.24	36.15	1.58	7.43	5	4.94	5.05	2.50	2.36
	LINE NH9	CI-NH9	CI-NH10	30 Inch Dia. Circular	165.0	170.0	0.013	0.40	670.90	670.22	22.56	27.91	1.80	5.97	5	4.70	5.17	2.36	2.08
	LINE NH8	CI-NH8	CI-NH9	30 Inch Dia. Circular	295.0	300.0	0.013	0.42	672.15	670.90	21.40	28.41	1.71	6.00	5	4.91	5.90	2.08	1.73
	LINE NH7	CI-NH7	CI-NH8	30 Inch Dia. Circular	295.0	300.0	0.013	0.42	673.39	672.15	20.16	28.41	1.63	5.94	5	5.56	5.85	1.73	1.66
	LINE NH6	CI-NH6	CI-NH7	30 Inch Dia. Circular	170.0	175.0	0.013	0.42	674.12	673.39	18.94	28.42	1.58	5.81	5	5.49	5.68	1.66	1.61

STATE OF TEXAS
NICHOLAS VON SPENCER
93702
LICENSED
PROFESSIONAL ENGINEER

Signature of Registrant , P.E. & Date 5-25-11

Texas Department of Transportation
© 2011

STORM SEWER HYDRAULIC DATA SHEET

SHEET 16 OF 19

DESIGN	FED. RD. DIV. NO.	STATE PROJECT NO.		HIGHWAY NO.
AMW	6	(SEE TITLE SHEET)		SH 289
GRAPHICS AMW	STATE	DISTRICT	COUNTY	SHEET NO.
CHECK NVS	TEXAS	DALLAS	COLLIN	281
CHECK NVS	CONTROL 0091	SECTION 04	JOB 055	

STORM SEWER COMPUTATIONS

NW ID	Line ID	Upstream Node	Downstream Node	Size	Actual Length (ft)	Hydraulic Length (ft)	Manning's n Value	Slope (%)	Invert Upstream (ft)	Invert Downstream (ft)	Discharge (cfs)	Capacity (cfs)	Uniform Depth (ft)	Uniform Velocity (ft/s)	Freq (yr)	Actual Velocity Downstream (ft/s)	Actual Velocity Upstream (ft/s)	Actual Depth Downstream (ft)	Actual Depth Upstream (ft)
NH (CONT.)	LINE NH5	CI-NH5	CI-NH6	30 Inch Dia. Circular	220.0	225.0	0.013	0.42	675.05	674.12	16.93	28.43	1.45	5.74	5	5.07	5.55	1.61	1.49
	LINE NH4	CI-NH4	CI-NH5	30 Inch Dia. Circular	220.0	225.0	0.013	0.42	675.98	675.05	14.87	28.41	1.34	5.56	5	4.87	3.53	1.49	2.00
	LINE NH3	GI-NH3	CI-NH4	30 Inch Dia. Circular	13.0	15.8	0.013	3.30	676.50	675.98	13.27	80.11	0.71	11.46	5	3.15	3.26	2.00	1.93
	LINE NH2	GI-NH2	GI-NH3	30 Inch Dia. Circular	94.7	100.0	0.013	0.83	677.33	676.50	8.71	40.22	0.82	6.21	5	2.14	3.66	1.93	1.22
	LINE NH1	GI-NH1	GI-NH2	30 Inch Dia. Circular	79.8	85.2	0.013	1.55	678.66	677.33	4.18	54.97	0.48	6.27	5	6.25	1.70	0.48	1.25
SH	LINE SH6	CI-SH6	OUTLET SH	24 Inch Dia. Circular	47.3	49.8	0.013	1.24	670.83	670.21	12.65	27.07	1.01	8.01	5	4.03	4.76	2.00	1.58
	LINE SH5	CI-SH5	CI-SH6	24 Inch Dia. Circular	165.0	170.0	0.013	0.93	672.40	670.83	10.27	23.41	0.97	6.82	5	6.82	5.23	0.97	1.20
	LINE SH4	CI-SH4	CI-SH5	24 Inch Dia. Circular	295.0	300.0	0.013	0.42	673.65	672.40	8.24	15.67	1.07	4.81	5	4.19	4.56	1.20	1.12
	LINE SH3	CI-SH3	CI-SH4	24 Inch Dia. Circular	295.0	300.0	0.013	0.42	674.89	673.65	6.20	15.67	0.91	4.46	5	3.43	4.16	1.12	0.96
	LINE SH2	CI-SH2	CI-SH3	24 Inch Dia. Circular	295.0	300.0	0.013	0.42	676.14	674.89	4.16	15.68	0.73	3.99	5	2.79	3.60	0.96	0.79
	LINE SH1	CI-SH1	CI-SH2	24 Inch Dia. Circular	295.0	300.0	0.013	0.75	678.38	676.14	1.93	21.05	0.43	3.95	5	3.95	1.23	0.43	1.00
NJJ	LINE NJJ10	CI-NJJ10	OUTLET NJJ	30 Inch Dia. Circular	68.0	70.5	0.013	2.55	668.81	667.00	15.97	70.50	0.84	11.01	5	10.39	5.75	0.88	1.38
	LINE NJJ9	CI-NJJ9	CI-NJJ10	30 Inch Dia. Circular	295.0	300.0	0.013	0.79	671.17	668.81	14.39	39.20	1.09	6.99	5	6.99	5.51	1.09	1.31
	LINE NJJ8	CI-NJJ8	CI-NJJ9	24 Inch Dia. Circular	295.0	300.0	0.013	0.79	673.54	671.17	13.09	21.62	1.17	6.83	5	6.83	5.74	1.17	1.36
	LINE NJJ7	CI-NJJ7	CI-NJJ8	24 Inch Dia. Circular	295.0	300.0	0.013	0.46	674.91	673.54	11.80	16.43	1.32	5.37	5	5.18	5.26	1.36	1.34
	LINE NJJ6	CI-NJJ6	CI-NJJ7	24 Inch Dia. Circular	195.0	200.0	0.013	0.46	675.82	674.91	10.74	16.42	1.23	5.29	5	4.79	5.17	1.34	1.26
	LINE NJJ5	CI-NJJ5	CI-NJJ6	24 Inch Dia. Circular	195.1	200.1	0.013	0.42	676.67	675.82	9.64	15.82	1.17	5.03	5	4.64	4.75	1.26	1.23
	LINE NJJ4	JOINT NJJ4	CI-NJJ5	24 Inch Dia. Circular	45.8	48.3	0.013	0.40	676.86	676.67	8.23	15.39	1.09	4.73	5	4.05	3.96	1.23	1.26
	LAT NJJ3	JOINT NJJ3	JOINT NJJ4	24 Inch Dia. Circular	36.7	36.7	0.013	0.40	677.01	676.86	8.23	15.39	1.09	4.73	5	3.96	3.86	1.26	1.29
	LAT NJJ2	JOINT NJJ2	JOINT NJJ3	24 Inch Dia. Circular	35.1	35.1	0.013	0.40	677.15	677.01	8.23	15.39	1.09	4.73	5	3.86	2.81	1.29	1.76
	LAT NJJ1	GI-NJJ2	JOINT NJJ2	24 Inch Dia. Circular	18.5	20.0	0.013	2.59	677.66	677.15	3.11	39.15	0.40	7.08	5	1.06	1.46	1.76	1.28
	LINE NJJ1	GI-NJJ1	JOINT NJJ2	24 Inch Dia. Circular	35.2	36.2	0.013	3.99	678.59	677.15	5.19	48.59	0.46	9.57	5	8.90	2.81	0.48	1.14
SJJ	LINE SJJ5	CI-SJJ5	OUTLET SJJ	24 Inch Dia. Circular	68.0	70.5	0.013	4.67	669.81	666.51	10.57	52.58	0.63	12.41	5	11.87	5.29	0.65	1.22
	LINE SJJ4	CI-SJJ4	CI-SJJ5	24 Inch Dia. Circular	295.0	300.0	0.013	1.12	673.17	669.81	8.53	25.78	0.83	6.98	5	6.98	4.85	0.83	1.09
	LINE SJJ3	CI-SJJ3	CI-SJJ4	24 Inch Dia. Circular	295.0	300.0	0.013	0.46	674.54	673.17	6.49	16.43	0.91	4.67	5	3.69	4.34	1.09	0.96
	LINE SJJ2	CI-SJJ2	CI-SJJ3	24 Inch Dia. Circular	295.0	300.0	0.013	0.46	675.91	674.54	4.45	16.43	0.74	4.21	5	4.21	3.79	0.74	0.80
	LINE SJJ1	CI-SJJ1	CI-SJJ2	24 Inch Dia. Circular	295.0	300.0	0.013	0.46	677.28	675.91	2.33	16.43	0.53	3.51	5	3.51	1.48	0.53	1.00
NJ	LINE NJ12	CI-NJ11	OUTLET NJ	30 Inch Dia. Circular	38.0	40.5	0.013	1.96	667.80	667.00	26.48	61.81	1.19	11.47	5	5.39	6.62	2.50	1.90
	LINE NJ11	CI-NJ10	CI-NJ11	30 Inch Dia. Circular	148.0	153.0	0.013	1.02	669.36	667.80	24.84	44.52	1.39	8.83	5	8.77	6.90	1.40	1.72
	LINE NJ10	CI-NJ9	CI-NJ10	30 Inch Dia. Circular	270.0	275.0	0.013	0.85	671.70	669.36	23.59	40.75	1.43	8.12	5	8.12	6.76	1.43	1.67
	LINE NJ9	CI-NJ8	CI-NJ9	30 Inch Dia. Circular	220.0	225.0	0.013	0.49	672.80	671.70	22.62	30.88	1.67	6.50	5	6.49	6.32	1.67	1.71
	LINE NJ8	CI-NJ7	CI-NJ8	24 Inch Dia. Circular	295.0	300.0	0.013	1.11	676.65	673.30	19.45	25.68	1.37	8.47	5	8.47	6.79	1.37	1.71
	LINE NJ7	JOINT NJ6	CI-NJ7	24 Inch Dia. Circular	212.3	214.8	0.013	2.00	680.93	676.65	15.69	34.38	0.99	10.12	5	10.10	6.09	0.99	1.53
	LAT NJ6	GI-NJ6	JOINT NJ6	24 Inch Dia. Circular	20.0	21.0	0.013	9.94	683.02	680.93	0.61	76.70	0.13	6.94	5	6.84	0.39	0.13	1.00
	LINE NJ5	CI-NJ5	JOINT NJ6	24 Inch Dia. Circular	82.7	85.2	0.013	2.04	682.67	680.93	15.08	34.72	0.96	10.11	5	9.79	6.21	0.99	1.44
	LINE NJ4	CI-NJ4	CI-NJ5	24 Inch Dia. Circular	145.0	150.0	0.013	2.04	685.73	682.67	13.22	34.76	0.89	9.77	5	9.70	5.68	0.90	1.39
	LINE NJ3	CI-NJ3	CI-NJ4	24 Inch Dia. Circular	145.0	150.0	0.013	2.04	688.79	685.73	9.67	34.75	0.75	8.99	5	8.96	5.05	0.75	1.17
	LINE NJ2	CI-NJ2	CI-NJ3	24 Inch Dia. Circular	120.0	125.0	0.013	2.03	691.32	688.79	7.14	34.63	0.64	8.24	5	8.21	4.45	0.64	1.02
	LINE NJ1	CI-NJ1	CI-NJ2	24 Inch Dia. Circular	120.0	125.0	0.013	1.51	693.20	691.32	4.37	29.89	0.54	6.44	5	6.44	2.71	0.54	1.02
SJ	LINE SJ8	CI-SJ8	OUTLET SJ	24 Inch Dia. Circular	38.0	40.5	0.013	4.41	668.30	666.51	15.89	51.13	0.80	13.62	5	11.79	6.35	0.89	1.49
	LINE SJ7	CI-SJ7	CI-SJ8	24 Inch Dia. Circular	148.0	153.0	0.013	2.33	671.86	668.30	13.86	37.11	0.88	10.38	5	10.31	6.02	0.89	1.37
	LINE SJ6	CI-SJ6	CI-SJ7	24 Inch Dia. Circular	195.0	200.0	0.013	0.49	672.84	671.86	12.50	17.03	1.35	5.54	5	5.43	5.35	1.37	1.39
	LINE SJ5	CI-SJ5	CI-SJ6	24 Inch Dia. Circular	295.0	300.0	0.013	0.49	674.30	672.84	10.43	17.03	1.19	5.36	5	4.46	5.08	1.39	1.24
	LINE SJ4	CI-SJ4	CI-SJ5	24 Inch Dia. Circular	295.0	300.0	0.013	0.78	676.65	674.30	7.95	21.50	0.88	6.00	5	5.99	4.69	0.88	1.06
	LINE SJ3	CI-SJ3	CI-SJ4	24 Inch Dia. Circular	295.0	300.0	0.013	2.01	682.67	676.65	5.66	34.48	0.57	7.70	5	7.70	4.14	0.57	0.90
	LINE SJ2	CI-SJ2	CI-SJ3	24 Inch Dia. Circular	295.0	300.0	0.013	2.04	688.79	682.67	3.54	34.75	0.45	6.74	5	6.74	3.52	0.45	0.71
	LINE SJ1	CI-SJ1	CI-SJ2	24 Inch Dia. Circular	245.0	250.0	0.013	1.77	693.20	688.79	1.73	32.35	0.33	5.19	5	5.19	1.10	0.33	1.00
NKK	LINE NKK10	CI-NKK10	OUTLET NKK	30 Inch Dia. Circular	88.2	90.7	0.013	0.45	674.42	674.02	27.41	29.53	2.05	6.35	5	5.58	5.58	2.50	2.50
	LINE NKK9	CI-NKK9	CI-NKK10	30 Inch Dia. Circular	172.0	177.0	0.013	0.37	675.08	674.42	24.76	26.92	2.05	5.74	5	5.04	5.04	2.50	2.50
	LINE NKK8	CI-NKK8	CI-NKK9	30 Inch Dia. Circular	145.0	150.0	0.013	0.44	675.74	675.08	23.89	29.16	1.83	6.19	5	4.87	5.05	2.50	2.30
	LINE NKK7	CI-NKK7	CI-NKK8	30 Inch Dia. Circular	145.0	150.0	0.013	0.53	676.52	675.74	21.29	31.98	1.56	6.62	5	4.50	5.32	2.30	1.90
	LINE NKK6	CI-NKK6	CI-NKK7	24 Inch Dia. Circular	150.1	155.1	0.013	1.50	678.85	676.52	18.16	29.80	1.18	9.41	5	9.36	6.55	1.19	1.65
	LINE NKK5	CI-NKK5	CI-NKK6	24 Inch Dia. Circular	140.0	145.0	0.013	2.13	681.94	678.85	14.79	35.53	0.94	10.21	5	10.14	6.09	0.94	1.45
	LINE NKK4	CI-NKK4	CI-NKK5	24 Inch Dia. Circular	120.0	125.0	0.013	2.21	684.70	681.94	12.29	36.18	0.84	9.88	5	9.77	5.57	0.84	1.32
	LINE NKK3	CI-NKK3	CI-NKK4	24 Inch Dia. Circular	145.0	150.0	0.013	2.21	688.02	684.70	9.60	36.18	0.73	9.23	5	9.19	5.01	0.73	1.17
	LINE NKK2	CI-NKK2	CI-NKK3	24 Inch Dia. Circular	145.1	150.1	0.013	2.16	691.26	688.02	6.84	35.76	0.62	8.31	5	8.31	4.24	0.62	1.02
	LINE NKK1	CI-NKK1	CI-NKK2	24 Inch Dia. Circular	145.3	150.3	0.013	1.45	693.44	691.26	3.71	29.29	0.50	6.06	5	6.06	2.36	0.50	1.00

STATE OF TEXAS
NICHOLAS VON SPENCER
93702
LICENSED
PROFESSIONAL ENGINEER

Nicholas V Spencer, P.E. 4-7-11
Signature of Registrant & Date

Texas Department of Transportation
© 2011

STORM SEWER HYDRAULIC DATA SHEET

SHEET 17 OF 19

DESIGN	FED.RD. DIV.NO.	STATE PROJECT NO.		HIGHWAY NO.
AMW	6	(SEE TITLE SHEET)		SH 289
GRAPHICS AMW	STATE	DISTRICT	COUNTY	SHEET NO.
CHECK NVS	TEXAS	DALLAS	COLLIN	282
CHECK NVS	CONTROL 0091	SECTION 04	JOB 055	

STORM SEWER COMPUTATIONS

NW ID	Line ID	Upstream Node	Downstream Node	Size	Actual Length (ft)	Hydraulic Length (ft)	Manning's n Value	Slope (%)	Invert Upstream (ft)	Invert Downstream (ft)	Discharge (cfs)	Capacity (cfs)	Uniform Depth (ft)	Uniform Velocity (ft/s)	Freq (yr)	Actual Velocity Downstream (ft/s)	Actual Velocity Upstream (ft/s)	Actual Depth Downstream (ft)	Actual Depth Upstream (ft)
SKK	LINE SKK6	CI-SKK6	OUTLET SKK	24 Inch Dia. Circular	186.2	188.7	0.013	0.54	674.62	673.60	15.96	17.90	1.58	5.98	5	5.08	5.35	2.00	1.81
	LINE SKK5	CI-SKK5	CI-SKK6	24 Inch Dia. Circular	172.0	177.0	0.013	0.40	675.33	674.62	12.55	15.39	1.47	5.08	5	4.21	4.71	1.81	1.58
	LINE SKK4	CI-SKK4	CI-SKK5	24 Inch Dia. Circular	295.0	300.0	0.013	0.48	676.77	675.33	10.46	16.88	1.19	5.38	5	3.92	5.12	1.58	1.24
	LINE SKK3	CI-SKK3	CI-SKK4	24 Inch Dia. Circular	270.0	275.0	0.013	1.68	681.39	676.77	8.26	31.52	0.73	8.02	5	8.01	4.71	0.73	1.09
	LINE SKK2	CI-SKK2	CI-SKK3	24 Inch Dia. Circular	295.0	300.0	0.013	2.21	688.02	681.39	5.52	36.18	0.55	7.90	5	7.90	3.87	0.55	0.93
	LINE SKK1	CI-SKK1	CI-SKK2	24 Inch Dia. Circular	294.6	299.6	0.013	1.81	693.44	688.02	1.86	32.72	0.34	5.36	5	5.36	1.18	0.34	1.00
NK	LINE NK7	JOINT NK6	OUTLET NK	30 Inch Dia. Circular	11.2	11.2	0.013	0.48	674.82	674.77	17.43	30.42	1.41	6.10	5	3.55	3.55	2.50	2.50
	LINE NK6	CI-NK5	JOINT NK6	30 Inch Dia. Circular	67.5	70.0	0.013	0.40	675.10	674.82	17.43	27.91	1.50	5.65	5	3.55	3.55	2.50	2.50
	LINE NK5	JOINT NK5	CI-NK5	30 Inch Dia. Circular	52.5	55.0	0.013	0.40	675.32	675.10	16.16	27.91	1.43	5.57	5	3.29	3.29	2.50	2.50
	LAT NK5	JOINT NK4B	JOINT NK5	24 Inch Dia. Circular	28.3	28.3	0.013	6.40	677.13	675.32	7.71	61.58	0.50	12.71	5	10.94	4.16	0.55	1.14
	LINE NK3	JOINT NK3	JOINT NK5	30 Inch Dia. Circular	112.0	112.0	0.013	0.40	675.77	675.32	11.36	27.91	1.16	5.12	5	2.31	2.50	2.50	2.18
	LAT NK4B	JOINT NK4A	JOINT NK4B	24 Inch Dia. Circular	34.0	34.0	0.013	3.43	678.30	677.13	7.71	45.08	0.58	10.16	5	9.14	2.82	0.63	1.63
	LAT NK3B	GI-NK3B	JOINT NK3	30 Inch Dia. Circular	20.0	21.0	0.013	0.40	675.85	675.77	8.80	27.91	1.01	4.75	5	1.94	1.93	2.18	2.19
	LINE NK2	CI-NK2	JOINT NK3	24 Inch Dia. Circular	30.5	33.0	0.013	8.71	678.64	675.77	4.28	71.84	0.34	11.92	5	11.15	3.70	0.36	0.79
	LAT NK4	GI-NK4	JOINT NK4A	24 Inch Dia. Circular	29.0	30.0	0.013	2.67	679.10	678.30	4.12	39.79	0.45	7.77	5	1.51	2.60	1.63	1.01
	LAT NK4A	GI-NK4A	JOINT NK4A	24 Inch Dia. Circular	7.0	8.0	0.013	2.35	678.49	678.30	3.82	37.33	0.45	7.27	5	1.40	1.53	1.63	1.48
	LAT NK3A	GI-NK3A	GI-NK3B	24 Inch Dia. Circular	7.3	15.0	0.013	0.40	676.41	676.35	4.06	15.39	0.73	3.89	5	1.44	1.46	1.69	1.66
	LINE NK1	CI-NK1	CI-NK2	24 Inch Dia. Circular	245.0	250.0	0.013	1.60	682.63	678.64	1.92	30.75	0.35	5.19	5	5.17	1.23	0.35	1.00
SK	LINE SK3	CI-SK3	OUTLET SK	24 Inch Dia. Circular	35.1	37.6	0.013	5.85	675.80	673.60	4.18	58.87	0.37	10.30	5	9.77	3.85	0.39	0.76
	LINE SK2	CI-SK2	CI-SK3	24 Inch Dia. Circular	145.0	150.0	0.013	1.89	678.64	675.80	3.06	33.49	0.42	6.30	5	6.30	3.35	0.42	0.66
	LINE SK1	CI-SK1	CI-SK2	24 Inch Dia. Circular	245.0	250.0	0.013	1.60	682.63	678.64	1.34	30.75	0.29	4.65	5	4.65	0.85	0.29	1.00
NLL	LINE NLL6	CI-NLL6	OUTLET NLL	24 Inch Dia. Circular	44.7	47.2	0.013	2.50	664.99	663.81	14.78	38.44	0.90	10.83	5	9.89	6.09	0.96	1.44
	LINE NLL5	CI-NLL5	CI-NLL6	24 Inch Dia. Circular	195.0	200.0	0.013	0.94	666.87	664.99	12.33	23.59	1.07	7.20	5	7.18	5.64	1.07	1.31
	LINE NLL4	CI-NLL4	CI-NLL5	24 Inch Dia. Circular	295.0	300.0	0.013	1.05	670.03	666.87	10.23	24.97	0.93	7.14	5	7.14	5.22	0.93	1.20
	LINE NLL3	CI-NLL3	CI-NLL4	24 Inch Dia. Circular	295.0	300.0	0.013	1.31	673.96	670.03	8.20	27.87	0.77	7.31	5	7.31	4.74	0.77	1.08
	LINE NLL2	CI-NLL2	CI-NLL3	24 Inch Dia. Circular	295.0	300.0	0.013	1.31	677.90	673.96	5.84	27.88	0.65	6.66	5	6.65	3.94	0.65	0.96
	LINE NLL1	CI-NLL1	CI-NLL2	24 Inch Dia. Circular	294.8	299.8	0.013	1.26	681.69	677.90	2.05	27.36	0.38	4.87	5	4.87	1.30	0.38	1.00
SLL	LINE SLL6	CI-SLL6	OUTLET SLL	24 Inch Dia. Circular	43.8	46.3	0.013	4.01	661.99	660.13	13.23	48.74	0.74	12.50	5	11.23	5.78	0.80	1.37
	LINE SLL5	CI-SLL5	CI-SLL6	24 Inch Dia. Circular	195.0	200.0	0.013	1.94	665.87	661.99	10.78	33.90	0.81	9.09	5	9.07	5.33	0.81	1.23
	LINE SLL4	CI-SLL4	CI-SLL5	24 Inch Dia. Circular	295.0	300.0	0.013	1.39	670.03	665.87	8.68	28.65	0.79	7.59	5	7.58	4.89	0.79	1.10
	LINE SLL3	CI-SLL3	CI-SLL4	24 Inch Dia. Circular	295.0	300.0	0.013	1.31	673.96	670.03	6.65	27.87	0.69	6.91	5	6.91	4.41	0.69	0.97
	LINE SLL2	CI-SLL2	CI-SLL3	24 Inch Dia. Circular	295.0	300.0	0.013	1.31	677.90	673.96	4.62	27.88	0.57	6.23	5	6.23	3.67	0.57	0.84
	LINE SLL1	CI-SLL1	CI-SLL2	24 Inch Dia. Circular	295.2	300.2	0.013	1.26	681.69	677.90	1.61	27.34	0.34	4.54	5	4.54	1.03	0.34	1.00
NL	LINE NL4	CI-NL4	OUTLET NL	24 Inch Dia. Circular	91.1	93.6	0.013	1.74	665.44	663.81	7.32	32.12	0.68	7.85	5	7.78	4.68	0.68	1.00
	LINE NL3	CI-NL3	CI-NL4	24 Inch Dia. Circular	175.0	180.0	0.013	0.96	667.16	665.44	6.04	23.79	0.72	5.99	5	5.99	4.23	0.72	0.93
	LINE NL2	CI-NL2	CI-NL3	24 Inch Dia. Circular	295.0	300.0	0.013	0.40	668.36	667.16	3.85	15.39	0.71	3.85	5	2.70	3.51	0.93	0.76
	LINE NL1	CI-NL1	CI-NL2	24 Inch Dia. Circular	265.0	270.0	0.013	0.77	670.44	668.36	2.02	21.36	0.43	4.06	5	4.06	1.29	0.43	1.00
SL	LINE SL4	CI-SL4	OUTLET SL	24 Inch Dia. Circular	92.0	94.5	0.013	4.56	664.44	660.13	6.64	51.96	0.50	10.78	5	10.68	4.52	0.50	0.95
	LINE SL3	CI-SL3	CI-SL4	24 Inch Dia. Circular	175.0	180.0	0.013	0.96	666.16	664.44	5.36	23.79	0.67	5.80	5	5.80	4.07	0.67	0.87
	LINE SL2	CI-SL2	CI-SL3	24 Inch Dia. Circular	295.0	300.0	0.013	0.73	668.36	666.16	3.33	20.84	0.56	4.61	5	4.61	3.44	0.56	0.69
	LINE SL1	CI-SL1	CI-SL2	24 Inch Dia. Circular	265.0	270.0	0.013	0.77	670.44	668.36	1.50	21.36	0.37	3.73	5	3.73	0.95	0.37	1.00

STATE OF TEXAS
NICHOLAS VON SPENCER
93702
LICENSED
PROFESSIONAL ENGINEER

Signature of Registrant , P.E. & Date 4-7-11

Texas Department of Transportation
© 2011

STORM SEWER HYDRAULIC DATA SHEET

SHEET 18 OF 19

DESIGN	FED. RD. DIV. NO.	STATE PROJECT NO.		HIGHWAY NO.
AMW	6	(SEE TITLE SHEET)		SH 289
GRAPHICS AMW	STATE	DISTRICT	COUNTY	SHEET NO.
CHECK NVS	TEXAS	DALLAS	COLLIN	283
	CONTROL	SECTION	JOB	
CHECK NVS	0091	04	055	

T:\DALDGN*A\SH 289 Celina\THE PLANS\Drainage Storm Sewer\Drainage Computation Sheets\hydraulicdatasheets.dgn 5/22/2011 9:46:08 AM

STORM SEWER COMPUTATIONS

NW ID	Line ID	Upstream Node	Downstream Node	Size	Actual Length (ft)	Hydraulic Length (ft)	Manning's n Value	Slope (%)	Invert Upstream (ft)	Invert Downstream (ft)	Discharge (cfs)	Capacity (cfs)	Uniform Depth (ft)	Uniform Velocity (ft/s)	Freq (yr)	Actual Velocity Downstream (ft/s)	Actual Velocity Upstream (ft/s)	Actual Depth Downstream (ft)	Actual Depth Upstream (ft)
NM	LINE NM6	CI-NM5	OUTLET NM	24 Inch Dia. Circular	51.9	54.4	0.013	3.34	667.31	665.49	19.57	44.50	0.97	12.98	5	11.74	7.09	1.05	1.64
	LINE NM5	CI-NM4	CI-NM5	24 Inch Dia. Circular	295.1	300.1	0.013	2.69	675.37	667.31	17.45	39.89	0.97	11.64	5	11.62	5.56	0.97	2.00
	LINE NM4	CI-NM3	CI-NM4	24 Inch Dia. Circular	296.3	301.3	0.013	3.58	686.16	675.37	15.41	46.04	0.83	12.51	5	12.50	6.12	0.83	1.50
	LINE NM3	CI-NM2	CI-NM3	24 Inch Dia. Circular	270.3	275.3	0.013	3.79	696.58	686.16	13.48	47.36	0.76	12.33	5	12.31	5.73	0.76	1.40
	LINE NM2	CI-NM1	CI-NM2	24 Inch Dia. Circular	220.0	225.0	0.013	3.65	704.80	696.58	11.37	46.49	0.70	11.60	5	11.58	5.36	0.70	1.28
	LINE NM1	EXIST CI-A1	CI-NM1	24 Inch Dia. Circular	315.0	320.0	0.013	2.93	714.15	704.80	8.38	41.62	0.63	9.83	5	9.82	3.25	0.63	1.53
SM	LINE SM7	CI-SM6	OUTLET SM	24 Inch Dia. Circular	37.5	40.0	0.013	7.65	665.83	662.77	19.21	67.30	0.76	17.51	5	14.66	7.10	0.87	1.61
	LINE SM6	CI-SM5	CI-SM6	24 Inch Dia. Circular	165.0	170.0	0.013	2.88	670.73	665.83	18.00	41.29	0.96	12.03	5	11.92	6.63	0.97	1.61
	LINE SM5	CI-SM4	CI-SM5	24 Inch Dia. Circular	244.8	249.8	0.013	2.95	678.09	670.73	16.10	41.77	0.90	11.77	5	11.76	5.12	0.90	2.00
	LINE SM4	CI-SM3	CI-SM4	24 Inch Dia. Circular	293.7	298.7	0.013	3.61	688.87	678.09	13.13	46.24	0.76	12.01	5	12.01	5.56	0.76	1.41
	LINE SM3	CI-SM2	CI-SM3	24 Inch Dia. Circular	284.9	289.9	0.013	4.29	701.31	688.87	9.89	50.42	0.62	11.83	5	11.82	5.04	0.62	1.20
	LINE SM2	CI-SM1	CI-SM2	24 Inch Dia. Circular	255.0	260.0	0.013	3.39	710.11	701.31	6.79	44.78	0.55	9.76	5	9.75	4.53	0.55	0.97
	LINE SM1	EXIST CI-B1	CI-SM1	24 Inch Dia. Circular	215.0	220.0	0.013	2.07	714.65	710.11	5.35	34.97	0.55	7.64	5	7.64	2.83	0.55	1.16
CELINA	LINE CSCLTD4	JOINT CSCLTD2	OUTLET CSCLTD	24 Inch Dia. Circular	62.38	62.38	0.013	4.47	700.67	697.88	4.99	51.45	0.44	9.86	5.00	9.65	3.41	0.44	0.95
	LINE CSCLTD3	JOINT CSCLTD1	JOINT CSCLTD2	24 Inch Dia. Circular	47.82	47.82	0.013	0.40	700.86	700.67	4.99	15.39	0.81	4.15	5.00	3.41	2.62	0.95	1.17
	LINE CSCLTD2	CI-CELINA SC LTD	JOINT CSCLTD1	24 Inch Dia. Circular	20.71	22.21	0.013	0.90	701.06	700.86	4.99	23.10	0.66	5.56	5.00	2.62	2.99	1.17	1.05
	LINE CSCLTD1	GI-CELINA SC LTD	CI-CELINA SC LTD	24 Inch Dia. Circular	30.76	33.26	0.013	6.35	703.17	701.06	0.44	61.34	0.13	5.38	5.00	5.38	0.28	0.13	1.00

STATE OF TEXAS
NICHOLAS VON SPENCER
93702
LICENSED PROFESSIONAL ENGINEER

Nicholas V Spencer, P.E. 5-25-11
Signature of Registrant & Date

Texas Department of Transportation
© 2011

STORM SEWER HYDRAULIC DATA SHEET

SHEET 19 OF 19

DESIGN	FED. RD. DIV. NO.	STATE PROJECT NO.		HIGHWAY NO.
AMW	6	(SEE TITLE SHEET)		SH 289
GRAPHICS AMW	STATE	DISTRICT	COUNTY	SHEET NO.
CHECK NVS	TEXAS	DALLAS	COLLIN	284
CHECK NVS	CONTROL 0091	SECTION 04	JOB 055	

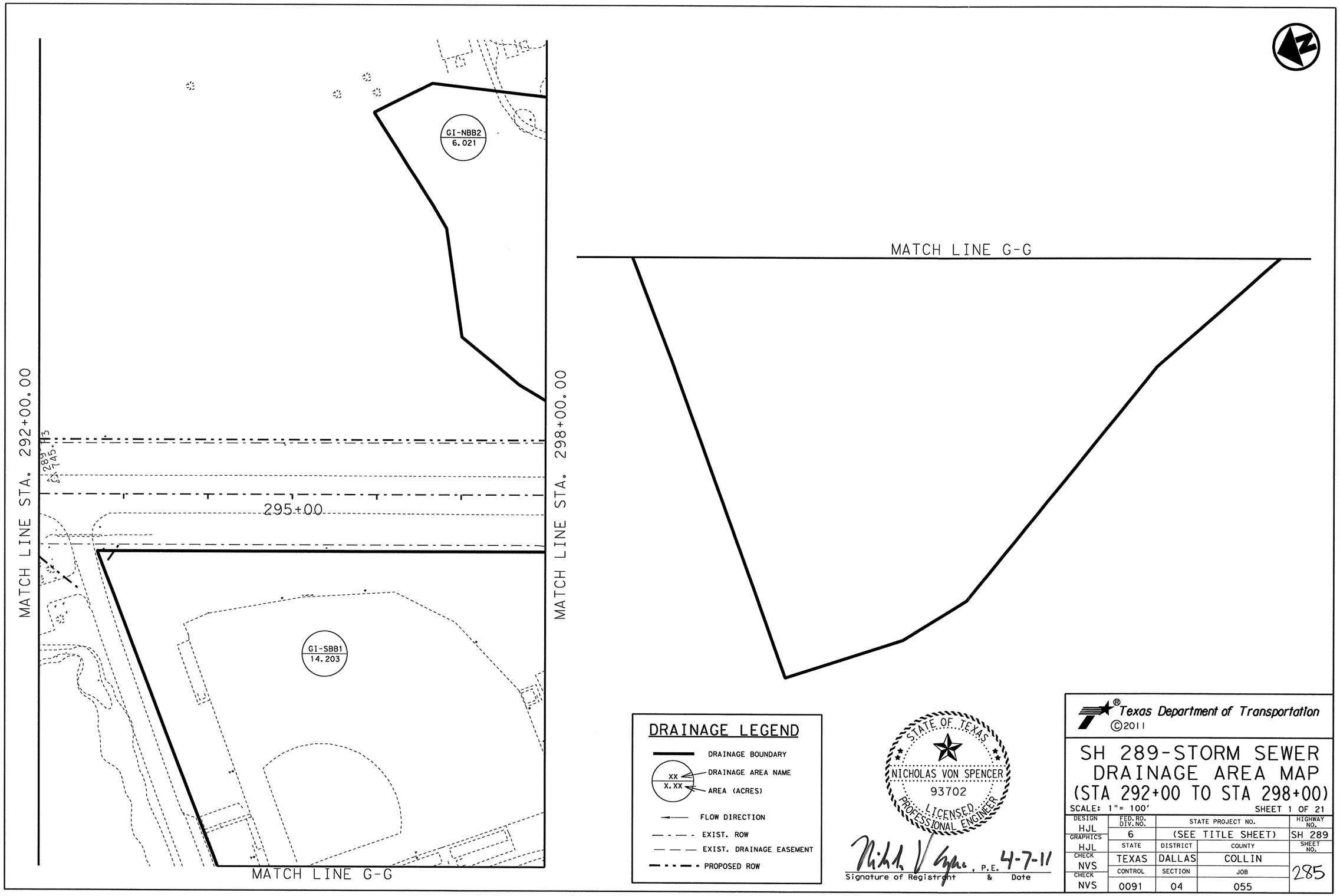
MATCH LINE STA. 292+00.00
MATCH LINE STA. 298+00.00
GI-NBB2
6.021
GI-SBB1
14.203
295+00
MATCH LINE G-G
MATCH LINE G-G
DRAINAGE LEGEND
DRAINAGE BOUNDARY
XX
X.XX
DRAINAGE AREA NAME
AREA (ACRES)
FLOW DIRECTION
EXIST. ROW
EXIST. DRAINAGE EASEMENT
PROPOSED ROW
STATE OF TEXAS
NICHOLAS VON SPENCER
93702
LICENSED
PROFESSIONAL ENGINEER
P.E.
4-7-11
Signature of Registrant & Date
Texas Department of Transportation
©2011
SH 289-STORM SEWER
DRAINAGE AREA MAP
(STA 292+00 TO STA 298+00)
SCALE: 1"= 100'
SHEET 1 OF 21
DESIGN HJL
GRAPHICS HJL
CHECK NVS
CHECK NVS
FED. RD. DIV. NO. 6
STATE PROJECT NO. (SEE TITLE SHEET)
HIGHWAY NO. SH 289
STATE TEXAS
DISTRICT DALLAS
COUNTY COLLIN
SHEET NO. 285
CONTROL 0091
SECTION 04
JOB 055

R-201104-01

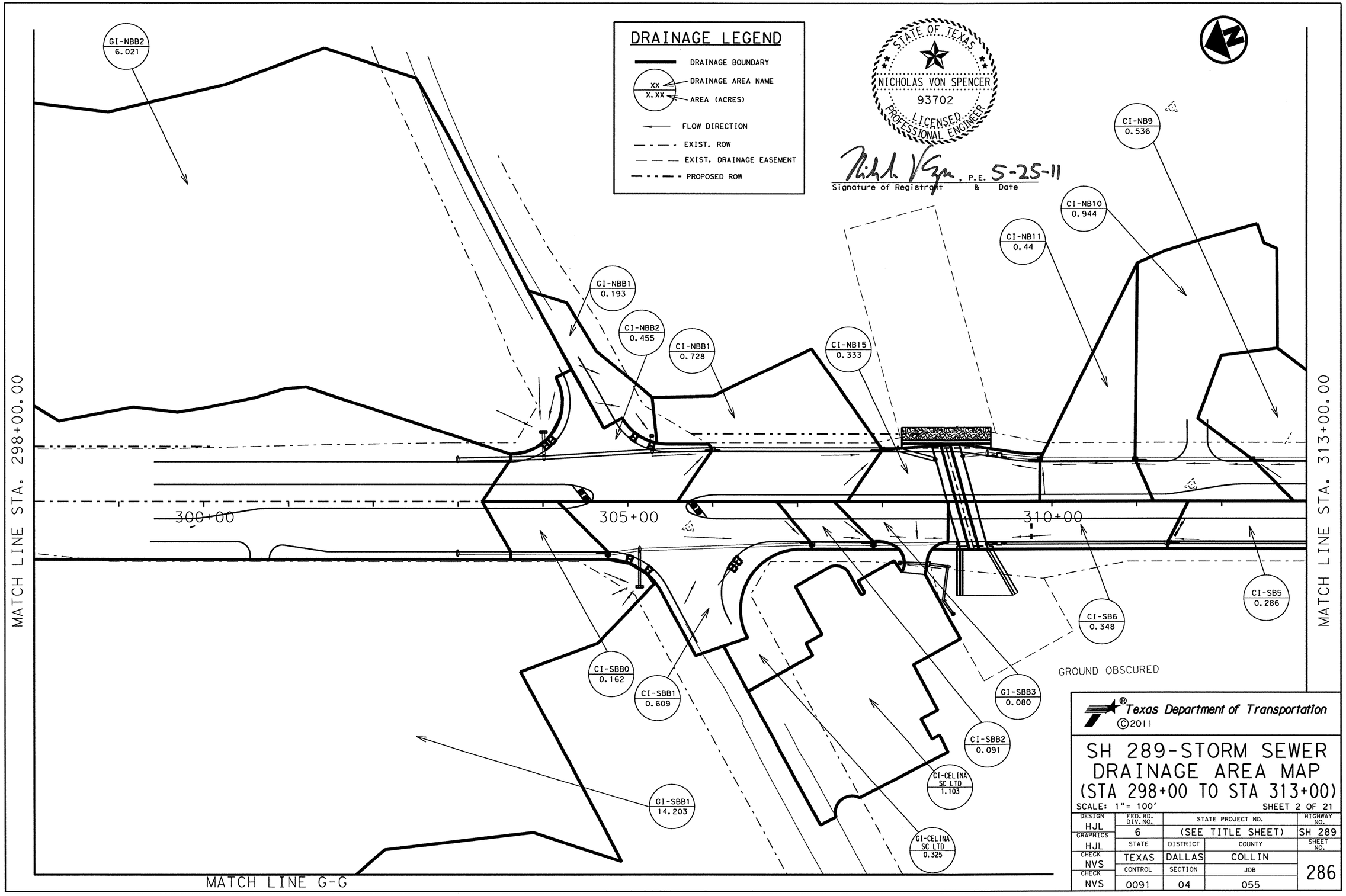

Texas Department of Transportation
©2011

SH 289-STORM SEWER DRAINAGE AREA MAP (STA 298+00 TO STA 313+00)

SCALE: 1"= 100' SHEET 2 OF 21

DESIGN	FED. RD. DIV. NO.	STATE PROJECT NO.		HIGHWAY NO.
HJL	6	(SEE TITLE SHEET)		SH 289
GRAPHICS	STATE	DISTRICT	COUNTY	SHEET NO.
HJL	TEXAS	DALLAS	COLLIN	286
CHECK NVS	CONTROL	SECTION	JOB	
CHECK NVS	0091	04	055	

R-201104-01

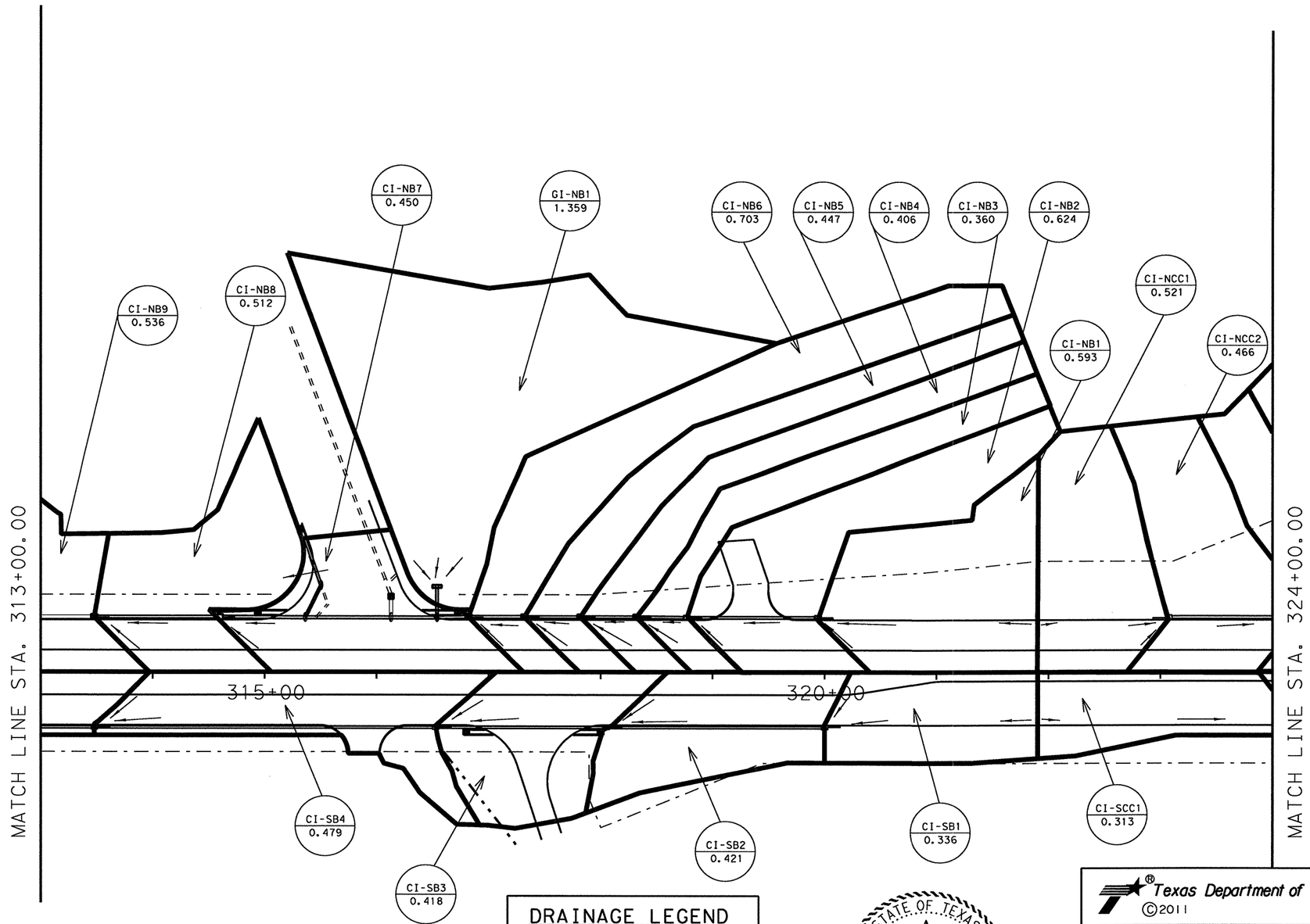

DRAINAGE LEGEND

- DRAINAGE BOUNDARY
- XX / X.XX — DRAINAGE AREA NAME / AREA (ACRES)
- FLOW DIRECTION
- EXIST. ROW
- EXIST. DRAINAGE EASEMENT
- PROPOSED ROW

STATE OF TEXAS
NICHOLAS VON SPENCER
93702
LICENSED PROFESSIONAL ENGINEER

Signature of Registrant , P.E. & Date 5-25-11

Texas Department of Transportation
©2011

SH 289-STORM SEWER DRAINAGE AREA (STA 313+00 TO STA 324+00)

SCALE: 1" = 100' SHEET 3 OF 21

DESIGN	FED. RD. DIV. NO.	STATE PROJECT NO.		HIGHWAY NO.
HJL	6	(SEE TITLE SHEET)		SH 289
GRAPHICS HJL	STATE	DISTRICT	COUNTY	SHEET NO.
CHECK NVS	TEXAS	DALLAS	COLLIN	287
CHECK NVS	CONTROL 0091	SECTION 04	JOB 055	

R-201104-01

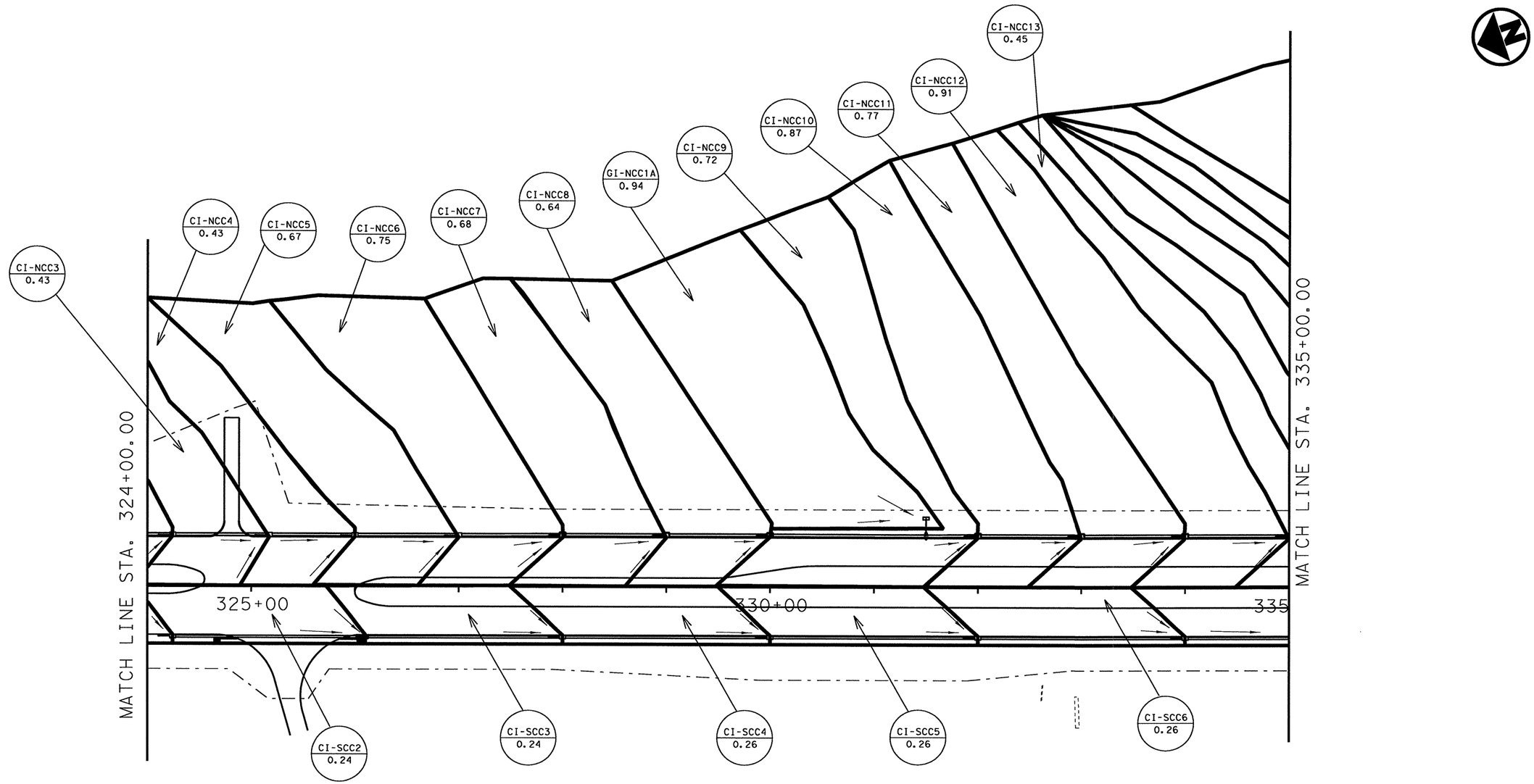

DRAINAGE LEGEND

- DRAINAGE BOUNDARY
- XX / X.XX — DRAINAGE AREA NAME / AREA (ACRES)
- FLOW DIRECTION
- EXIST. ROW
- EXIST. DRAINAGE EASEMENT
- PROPOSED ROW

STATE OF TEXAS
NICHOLAS VON SPENCER
93702
LICENSED
PROFESSIONAL ENGINEER

Signature of Registrant , P.E. & Date 4-7-11

Texas Department of Transportation
©2011

SH 289-STORM SEWER DRAINAGE AREA (STA 324+00 TO STA 335+00)

SCALE: 1"= 100'

SHEET 4 OF 21

DESIGN	FED. RD. DIV. NO.	STATE PROJECT NO.		HIGHWAY NO.
HJL	6	(SEE TITLE SHEET)		SH 289
GRAPHICS HJL	STATE	DISTRICT	COUNTY	SHEET NO.
CHECK NVS	TEXAS	DALLAS	COLLIN	288
CHECK NVS	CONTROL	SECTION	JOB	
	0091	04	055	

R-201104-01

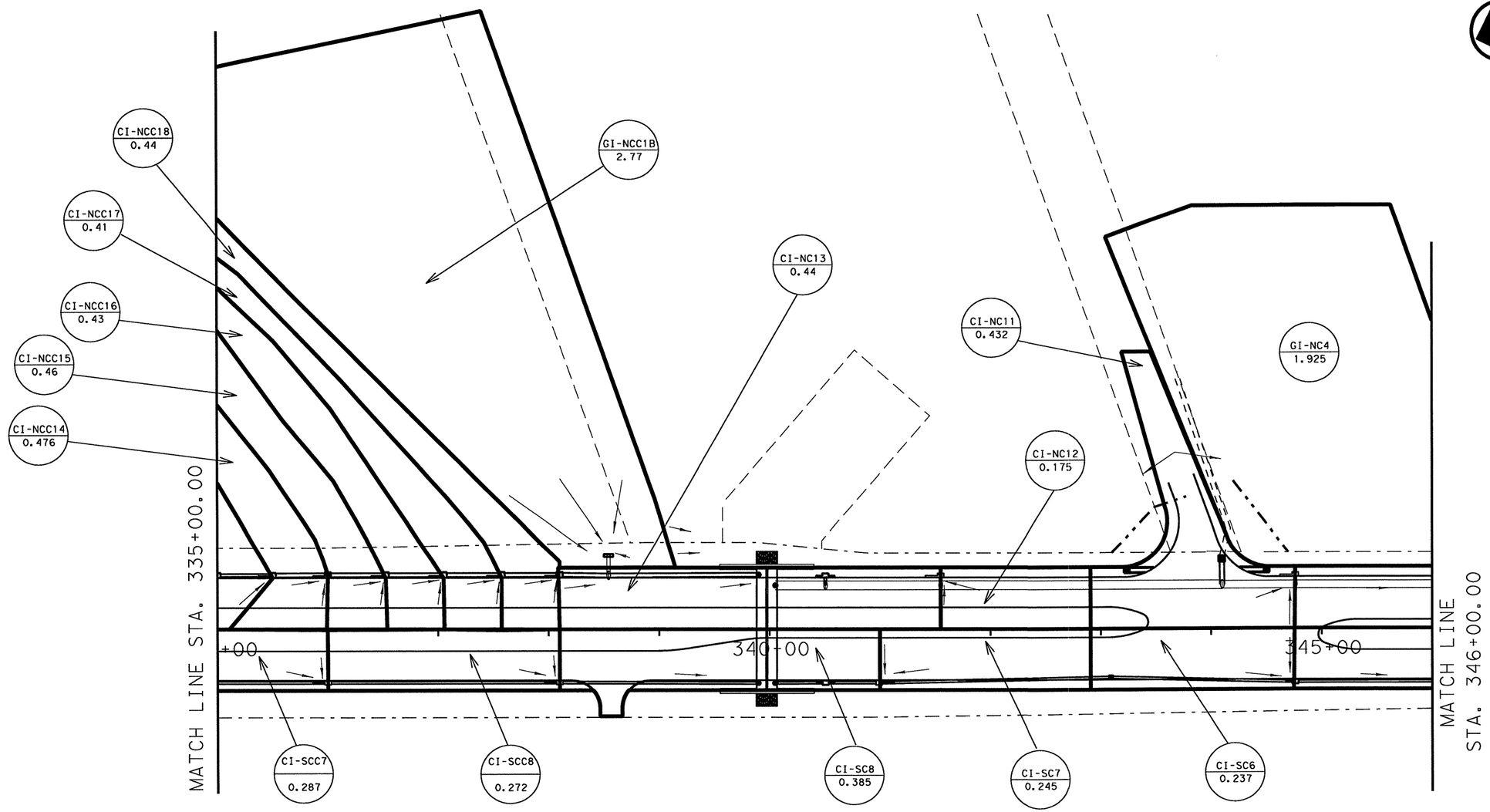

DRAINAGE LEGEND

- DRAINAGE BOUNDARY
- XX / X.XX — DRAINAGE AREA NAME / AREA (ACRES)
- FLOW DIRECTION
- EXIST. ROW
- EXIST. DRAINAGE EASEMENT
- PROPOSED ROW

STATE OF TEXAS
NICHOLAS VON SPENCER
93702
LICENSED
PROFESSIONAL ENGINEER

Signature of Registrant , P.E. & Date 4-7-11

Texas Department of Transportation
©2011

SH 289-STORM SEWER DRAINAGE AREA (STA 335+00 TO STA 346+00)

SCALE: 1"= 100' SHEET 5 OF 21

DESIGN	FED. RD. DIV. NO.	STATE PROJECT NO.		HIGHWAY NO.
HJL	6	(SEE TITLE SHEET)		SH 289
GRAPHICS HJL	STATE	DISTRICT	COUNTY	SHEET NO.
CHECK NVS	TEXAS	DALLAS	COLLIN	289
CHECK NVS	CONTROL	SECTION	JOB	
	0091	04	055	

R-201104-01

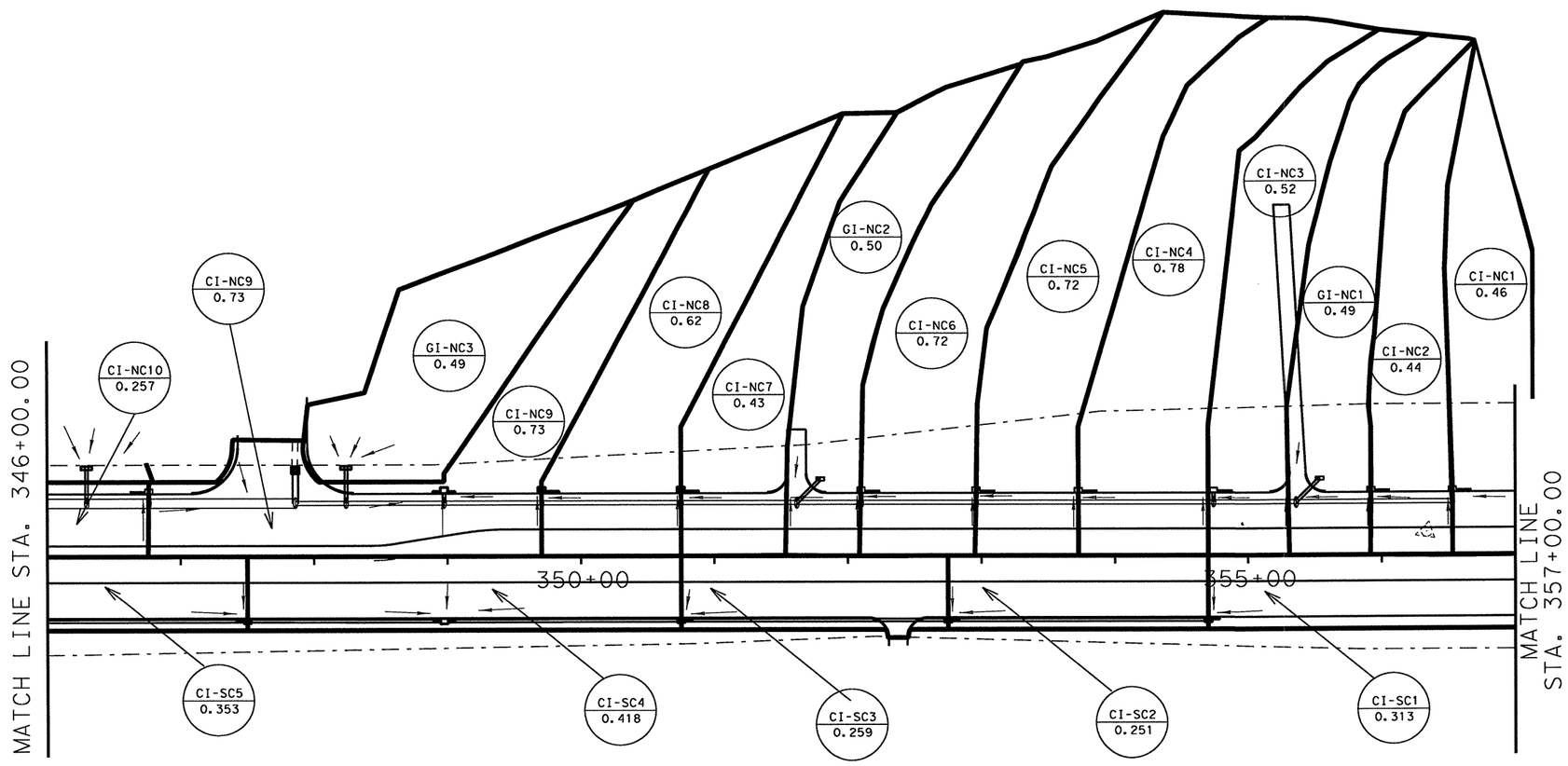

DRAINAGE LEGEND

- DRAINAGE BOUNDARY
- XX — DRAINAGE AREA NAME
- X.XX — AREA (ACRES)
- FLOW DIRECTION
- EXIST. ROW
- EXIST. DRAINAGE EASEMENT
- PROPOSED ROW

STATE OF TEXAS
NICHOLAS VON SPENCER
93702
LICENSED
PROFESSIONAL ENGINEER

Nicholas V Spencer, P.E. 4-7-11
Signature of Registrant & Date

Texas Department of Transportation
©2011

SH 289-STORM SEWER DRAINAGE AREA (STA 346+00 TO STA 357+00)

SCALE: 1" = 100'

SHEET 6 OF 21

DESIGN	FED. RD. DIV. NO.	STATE PROJECT NO.		HIGHWAY NO.
HJL	6	(SEE TITLE SHEET)		SH 289
GRAPHICS HJL	STATE	DISTRICT	COUNTY	SHEET NO.
CHECK NVS	TEXAS	DALLAS	COLLIN	290
CHECK NVS	CONTROL	SECTION	JOB	
	0091	04	055	

R-201104-01

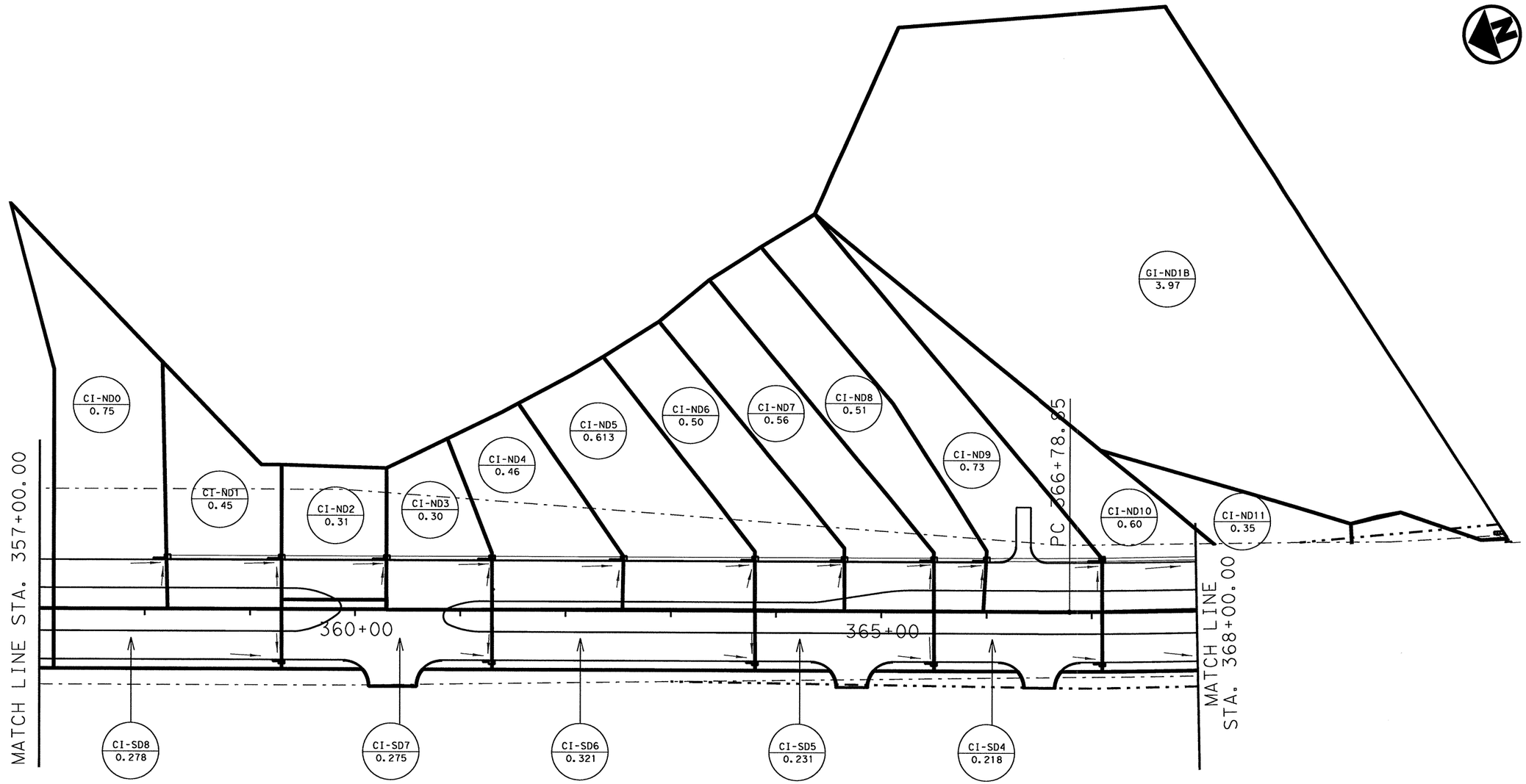

DRAINAGE LEGEND

- DRAINAGE BOUNDARY
- XX / X.XX — DRAINAGE AREA NAME / AREA (ACRES)
- FLOW DIRECTION
- EXIST. ROW
- EXIST. DRAINAGE EASEMENT
- PROPOSED ROW

STATE OF TEXAS
NICHOLAS VON SPENCER
93702
LICENSED
PROFESSIONAL ENGINEER

Signature of Registrant , P.E. & Date 4-7-11

Texas Department of Transportation
©2011

SH 289-STORM SEWER DRAINAGE AREA (STA 357+00 TO STA 368+00)

SCALE: 1" = 100'

SHEET 7 OF 21

DESIGN	FED. RD. DIV. NO.	STATE PROJECT NO.		HIGHWAY NO.
HJL	6	(SEE TITLE SHEET)		SH 289
GRAPHICS HJL	STATE	DISTRICT	COUNTY	SHEET NO.
CHECK NVS	TEXAS	DALLAS	COLLIN	291
CHECK NVS	CONTROL	SECTION	JOB	
	0091	04	055	

R-201104-01

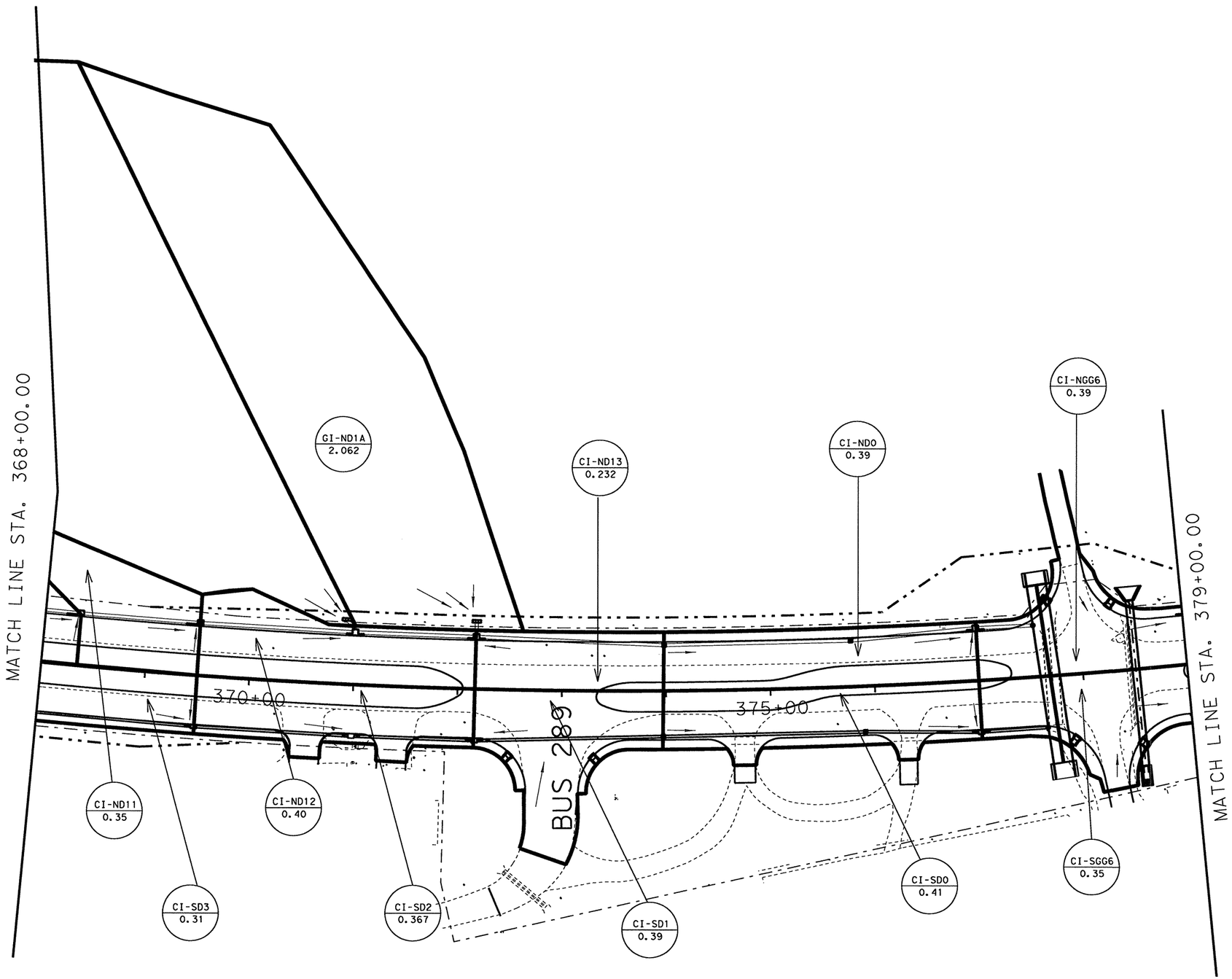

DRAINAGE LEGEND

- DRAINAGE BOUNDARY
- XX / X.XX — DRAINAGE AREA NAME / AREA (ACRES)
- FLOW DIRECTION
- EXIST. ROW
- EXIST. DRAINAGE EASEMENT
- PROPOSED ROW

STATE OF TEXAS
NICHOLAS VON SPENCER
93702
LICENSED
PROFESSIONAL ENGINEER

Nicholas Von Spencer, P.E. 4-7-11
Signature of Registrant & Date

Texas Department of Transportation
©2011

SH 289-STORM SEWER DRAINAGE AREA (STA 368+00 TO STA 379+00)

SCALE: 1"= 100'

SHEET 8 OF 21

DESIGN	FED. RD. DIV. NO.	STATE PROJECT NO.		HIGHWAY NO.
HJL	6	(SEE TITLE SHEET)		SH 289
GRAPHICS HJL	STATE	DISTRICT	COUNTY	SHEET NO.
CHECK NVS	TEXAS	DALLAS	COLLIN	292
CHECK	CONTROL	SECTION	JOB	
NVS	0091	04	055	

R-201104-01

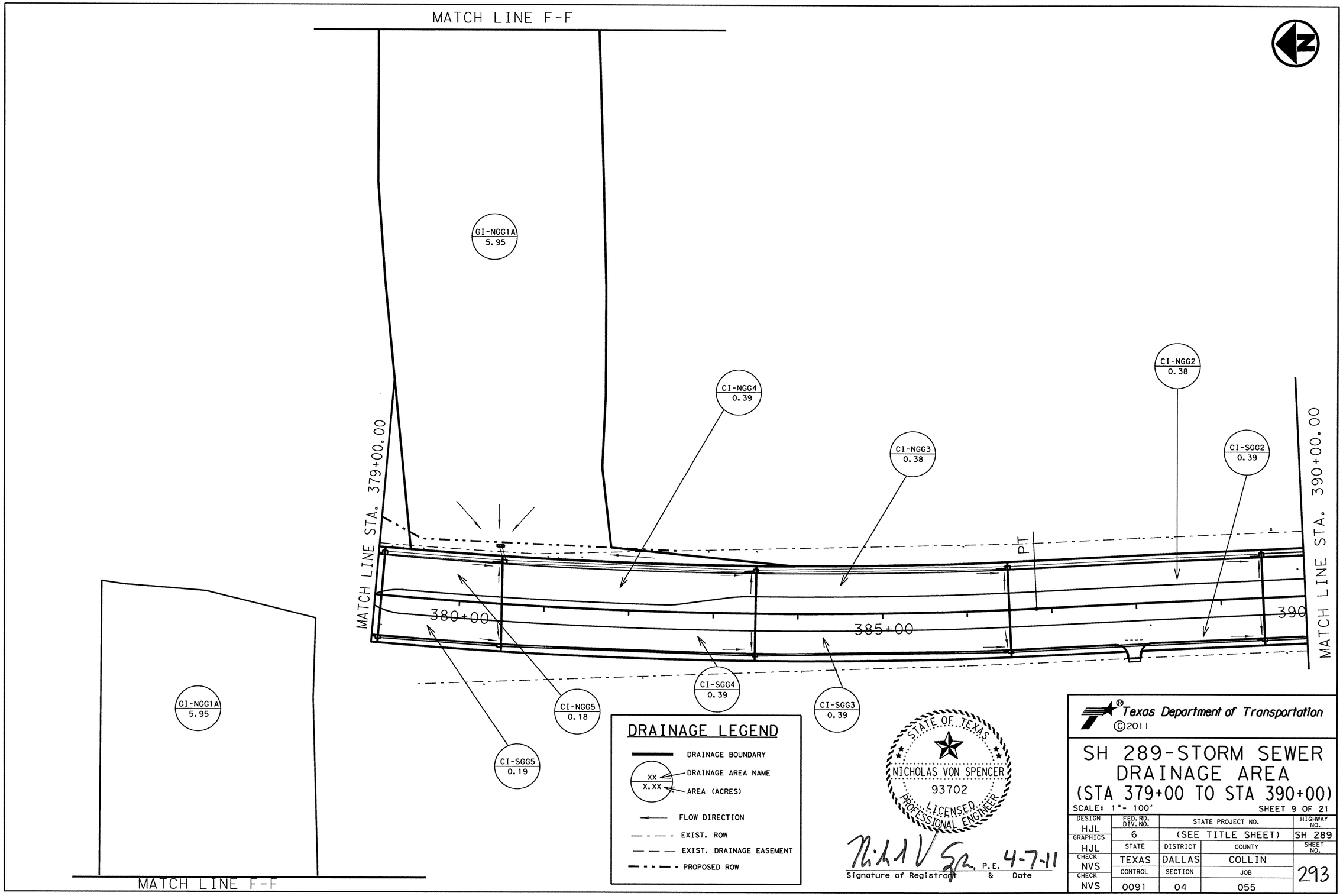
MATCH LINE F-F
GI-NGG1A
5.95
CI-NGG4
0.39
CI-NGG3
0.38
CI-NGG2
0.38
CI-SGG2
0.39
MATCH LINE STA. 379+00.00
MATCH LINE STA. 390+00.00
PT
380+00
385+00
390
CI-SGG4
0.39
CI-SGG3
0.39
CI-NGG5
0.18
CI-SGG5
0.19
GI-NGG1A
5.95
MATCH LINE F-F
DRAINAGE LEGEND
DRAINAGE BOUNDARY
XX
X.XX
DRAINAGE AREA NAME
AREA (ACRES)
FLOW DIRECTION
EXIST. ROW
EXIST. DRAINAGE EASEMENT
PROPOSED ROW
STATE OF TEXAS
NICHOLAS VON SPENCER
93702
LICENSED
PROFESSIONAL ENGINEER
P.E. 4-7-11
Signature of Registrant & Date
Texas Department of Transportation
©2011
SH 289-STORM SEWER
DRAINAGE AREA
(STA 379+00 TO STA 390+00)
SCALE: 1"= 100'
SHEET 9 OF 21
DESIGN HJL
GRAPHICS HJL
CHECK NVS
CHECK NVS
FED. RD. DIV. NO. 6
STATE PROJECT NO. (SEE TITLE SHEET)
HIGHWAY NO. SH 289
STATE TEXAS
DISTRICT DALLAS
COUNTY COLLIN
CONTROL 0091
SECTION 04
JOB 055
SHEET NO. 293

R-201104-01

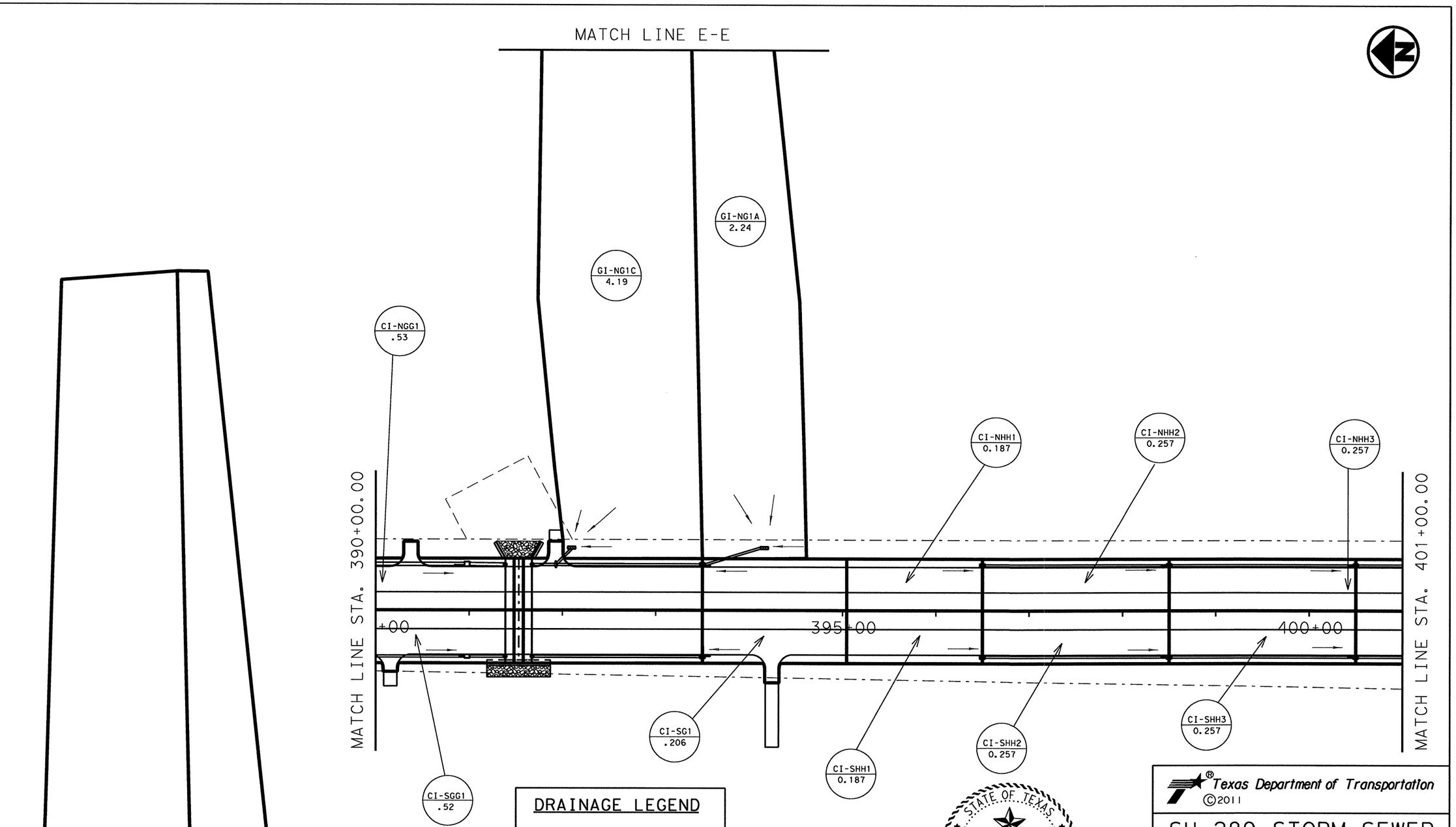

DRAINAGE LEGEND

- DRAINAGE BOUNDARY
- XX / X.XX — DRAINAGE AREA NAME / AREA (ACRES)
- FLOW DIRECTION
- EXIST. ROW
- EXIST. DRAINAGE EASEMENT
- PROPOSED ROW

STATE OF TEXAS
NICHOLAS VON SPENCER
93702
LICENSED
PROFESSIONAL ENGINEER

Signature of Registrant , P.E. & Date 4-7-11

Texas Department of Transportation
©2011

SH 289-STORM SEWER DRAINAGE AREA
(STA 390+00 TO STA 401+00)

SCALE: 1"= 100'

SHEET 10 OF 21

DESIGN	FED. RD. DIV. NO.	STATE PROJECT NO.		HIGHWAY NO.
HJL	6	(SEE TITLE SHEET)		SH 289
GRAPHICS HJL	STATE	DISTRICT	COUNTY	SHEET NO.
CHECK NVS	TEXAS	DALLAS	COLLIN	294
CHECK NVS	CONTROL	SECTION	JOB	
	0091	04	055	

R-201104-01

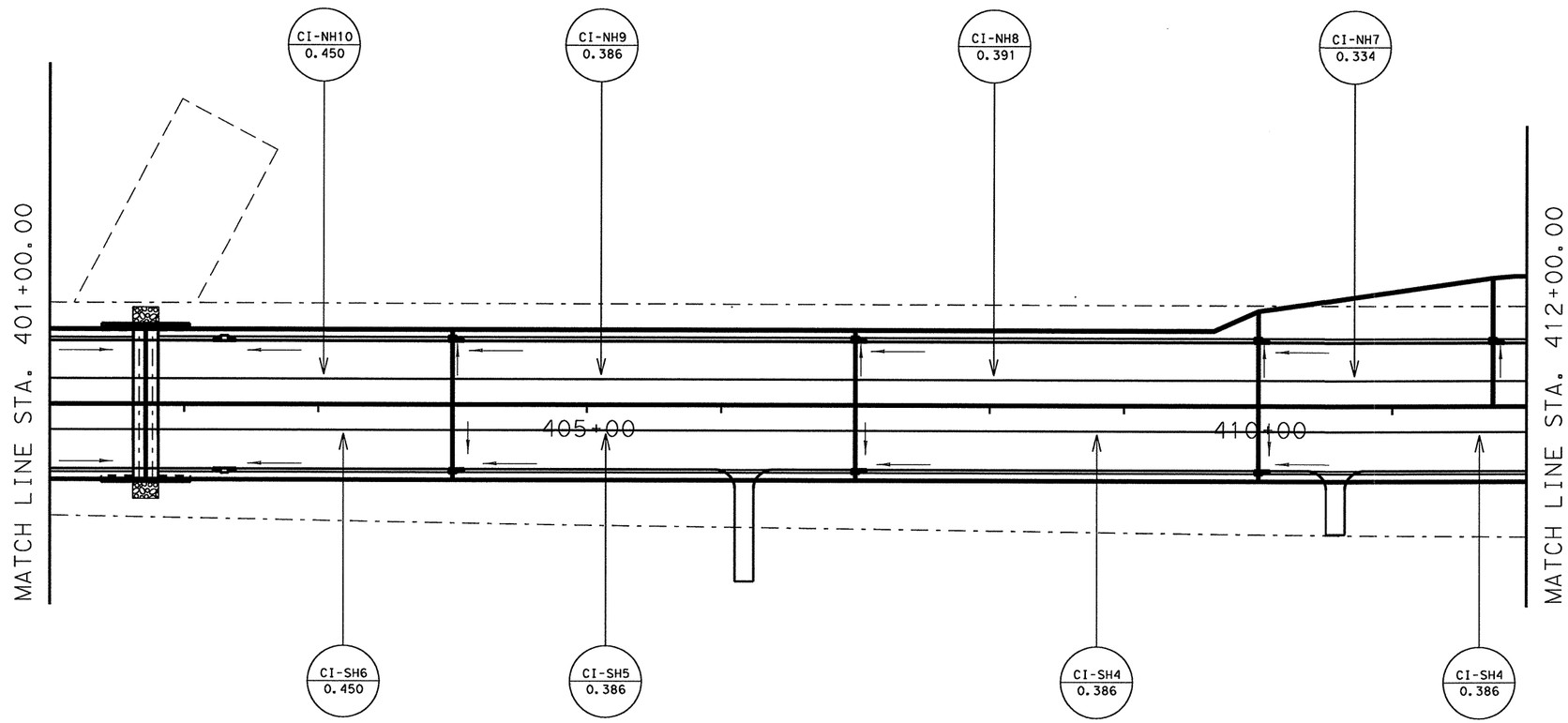

DRAINAGE LEGEND

- DRAINAGE BOUNDARY
- XX / X.XX — DRAINAGE AREA NAME / AREA (ACRES)
- FLOW DIRECTION
- EXIST. ROW
- EXIST. DRAINAGE EASEMENT
- PROPOSED ROW

STATE OF TEXAS
NICHOLAS VON SPENCER
93702
LICENSED
PROFESSIONAL ENGINEER

Signature of Registrant , P.E. & Date 4-7-11

Texas Department of Transportation
©2011

SH 289-STORM SEWER DRAINAGE AREA (STA 401+00 TO STA 412+00)

SCALE: 1"= 100'

SHEET 11 OF 21

DESIGN	FED. RD. DIV. NO.	STATE PROJECT NO.		HIGHWAY NO.
HJL	6	(SEE TITLE SHEET)		SH 289
GRAPHICS HJL	STATE	DISTRICT	COUNTY	SHEET NO.
CHECK NVS	TEXAS	DALLAS	COLLIN	295
CHECK	CONTROL	SECTION	JOB	
NVS	0091	04	055	

R-201104-01

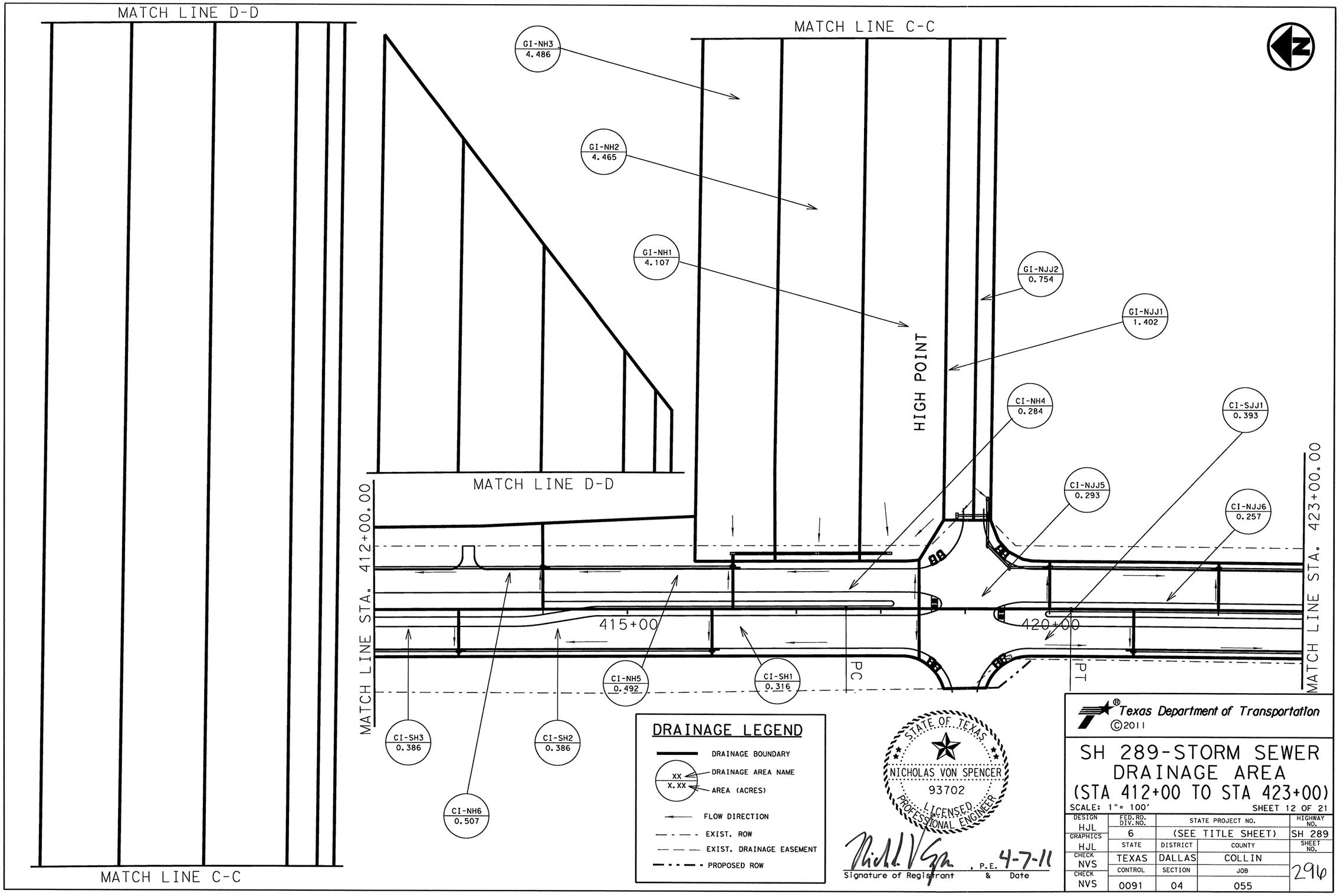
MATCH LINE D-D
MATCH LINE C-C
MATCH LINE D-D
MATCH LINE C-C
MATCH LINE STA. 412+00.00
MATCH LINE STA. 423+00.00
GI-NH3 4.486
GI-NH2 4.465
GI-NH1 4.107
GI-NJJ2 0.754
GI-NJJ1 1.402
HIGH POINT
CI-NH4 0.284
CI-SJJ1 0.393
CI-NJJ5 0.293
CI-NJJ6 0.257
415+00
420+00
PC
PT
CI-NH5 0.492
CI-SH1 0.316
CI-SH3 0.386
CI-SH2 0.386
CI-NH6 0.507
DRAINAGE LEGEND
DRAINAGE BOUNDARY
XX DRAINAGE AREA NAME
X.XX AREA (ACRES)
FLOW DIRECTION
EXIST. ROW
EXIST. DRAINAGE EASEMENT
PROPOSED ROW
STATE OF TEXAS
NICHOLAS VON SPENCER
93702
LICENSED
PROFESSIONAL ENGINEER
, P.E. 4-7-11
Signature of Registrant & Date
Texas Department of Transportation
©2011
SH 289-STORM SEWER DRAINAGE AREA
(STA 412+00 TO STA 423+00)
SCALE: 1"= 100'
SHEET 12 OF 21
DESIGN HJL
GRAPHICS HJL
CHECK NVS
CHECK NVS
FED. RD. DIV. NO. 6
STATE PROJECT NO. (SEE TITLE SHEET)
HIGHWAY NO. SH 289
STATE TEXAS
DISTRICT DALLAS
COUNTY COLLIN
SHEET NO. 296
CONTROL 0091
SECTION 04
JOB 055

R-201104-01

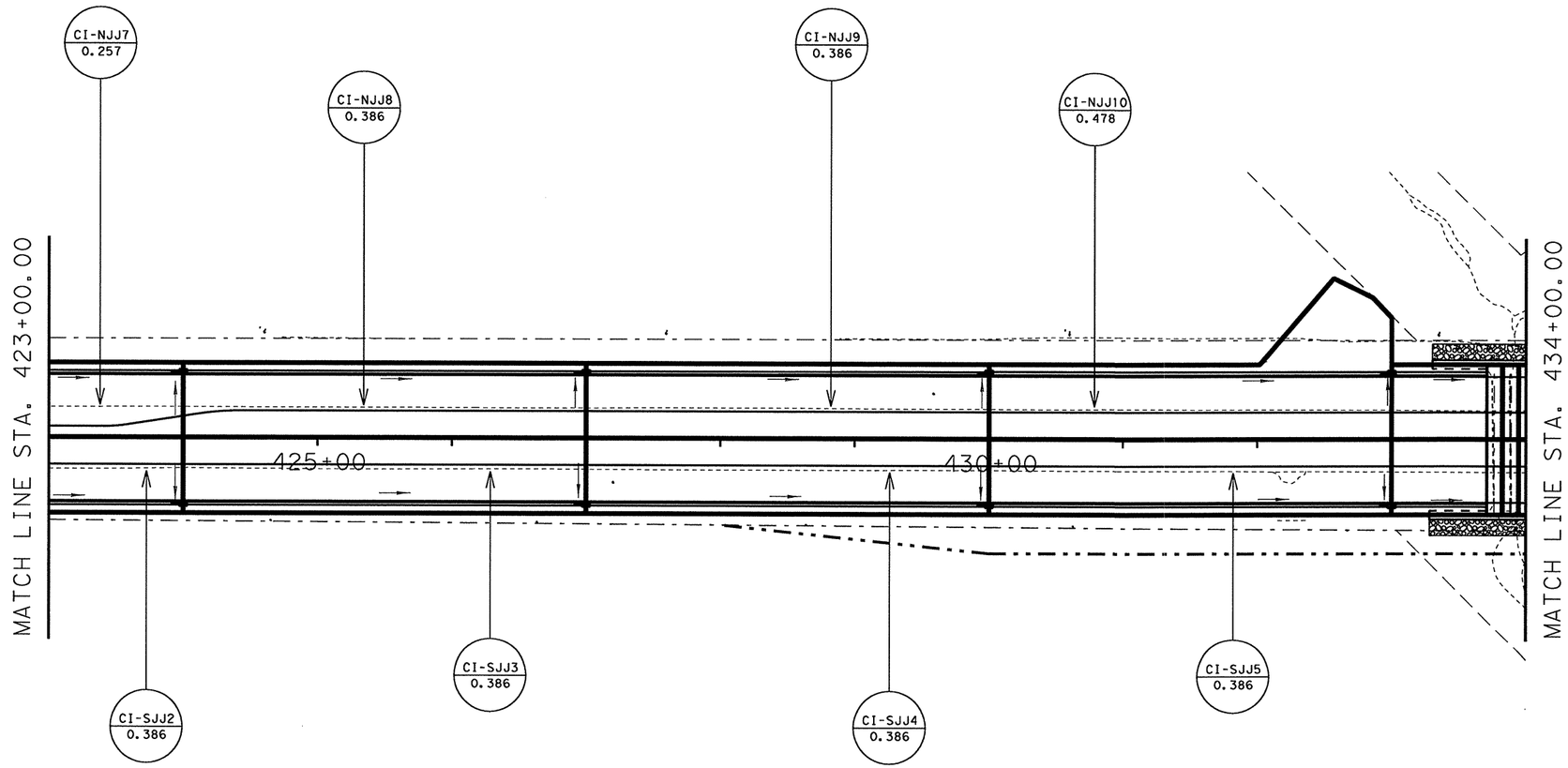

DRAINAGE LEGEND

- DRAINAGE BOUNDARY
- XX / X.XX — DRAINAGE AREA NAME / AREA (ACRES)
- FLOW DIRECTION
- EXIST. ROW
- EXIST. DRAINAGE EASEMENT
- PROPOSED ROW

STATE OF TEXAS
NICHOLAS VON SPENCER
93702
LICENSED PROFESSIONAL ENGINEER

Signature of Registrant , P.E. & Date 4-7-11

Texas Department of Transportation
©2011

SH 289-STORM SEWER DRAINAGE AREA (STA 423+00 TO STA 434+00)

SCALE: 1"= 100' SHEET 13 OF 21

DESIGN	FED. RD. DIV. NO.	STATE PROJECT NO.		HIGHWAY NO.
HJL	6	(SEE TITLE SHEET)		SH 289
GRAPHICS HJL	STATE	DISTRICT	COUNTY	SHEET NO.
CHECK NVS	TEXAS	DALLAS	COLLIN	297
CHECK NVS	CONTROL 0091	SECTION 04	JOB 055	

R-201104-01

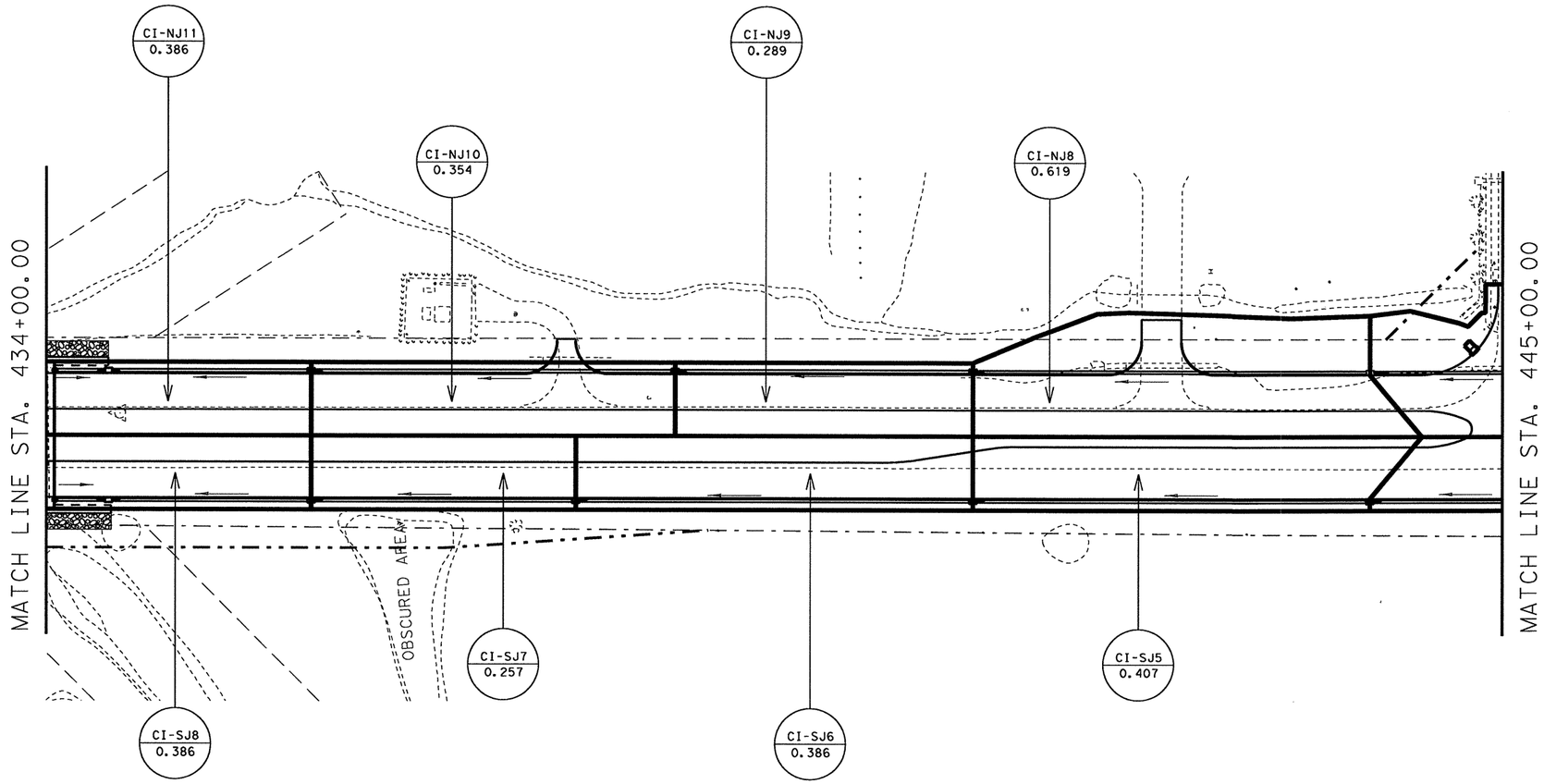

DRAINAGE LEGEND

- DRAINAGE BOUNDARY
- XX / X.XX — DRAINAGE AREA NAME / AREA (ACRES)
- FLOW DIRECTION
- EXIST. ROW
- EXIST. DRAINAGE EASEMENT
- PROPOSED ROW

STATE OF TEXAS
NICHOLAS VON SPENCER
93702
LICENSED
PROFESSIONAL ENGINEER

Signature of Registrant , P.E. & Date 4-7-11

Texas Department of Transportation
©2011

SH 289-STORM SEWER DRAINAGE AREA (STA 434+00 TO STA 445+00)

SCALE: 1"= 100'

SHEET 14 OF 21

DESIGN	FED. RD. DIV. NO.	STATE PROJECT NO.		HIGHWAY NO.
HJL	6	(SEE TITLE SHEET)		SH 289
GRAPHICS HJL	STATE	DISTRICT	COUNTY	SHEET NO.
CHECK NVS	TEXAS	DALLAS	COLLIN	298
CHECK NVS	CONTROL	SECTION	JOB	
	0091	04	055	

R-201104-01

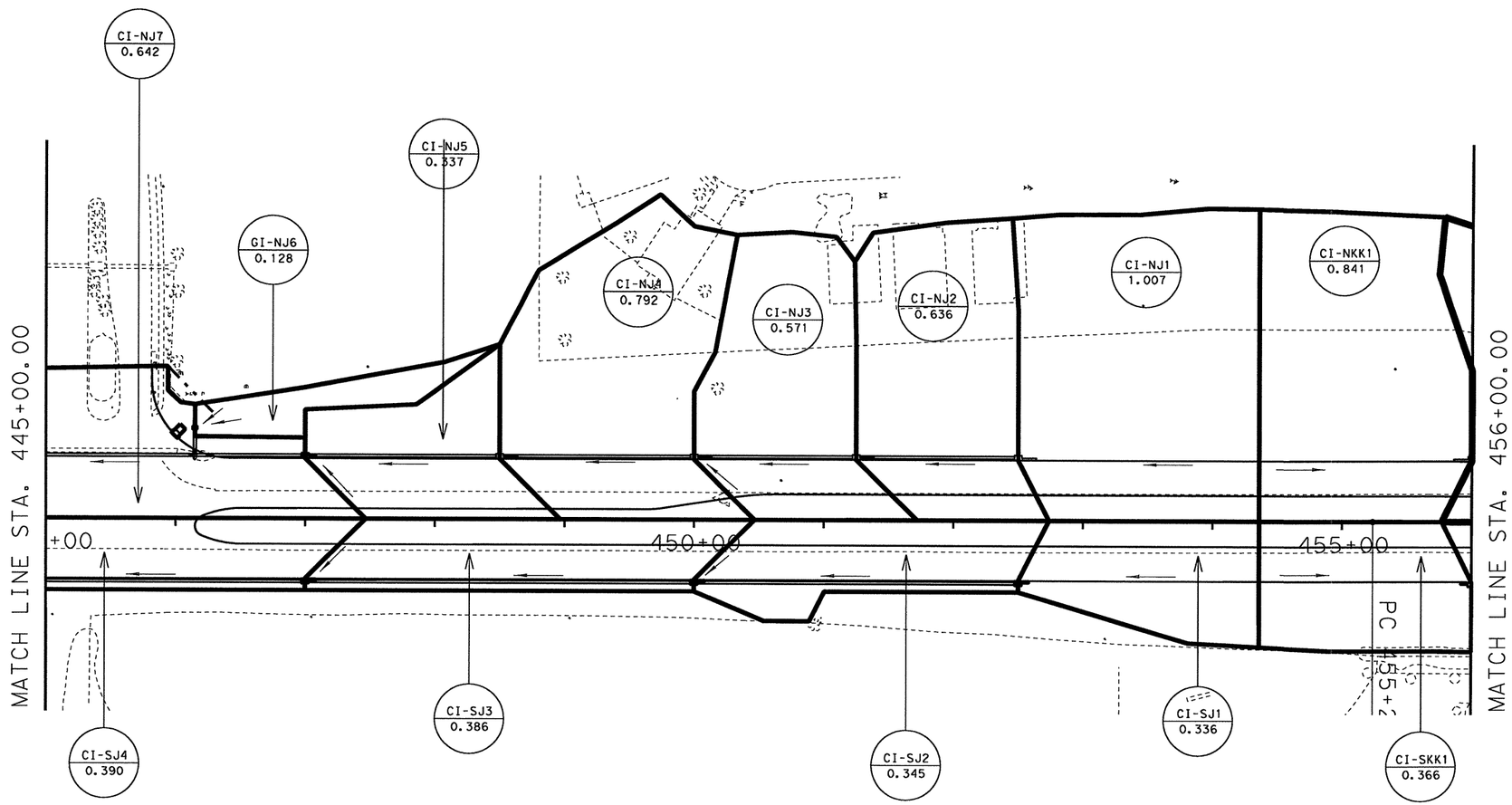

DRAINAGE LEGEND

- DRAINAGE BOUNDARY
- XX — DRAINAGE AREA NAME
- X.XX — AREA (ACRES)
- FLOW DIRECTION
- EXIST. ROW
- EXIST. DRAINAGE EASEMENT
- PROPOSED ROW

STATE OF TEXAS
NICHOLAS VON SPENCER
93702
LICENSED
PROFESSIONAL ENGINEER

Nicholas Von Spencer, P.E. 4-7-11
Signature of Registrant & Date

Texas Department of Transportation
©2011

SH 289-STORM SEWER DRAINAGE AREA (STA 445+00 TO STA 456+00)

SCALE: 1"= 100'

SHEET 15 OF 21

DESIGN	FED. RD. DIV. NO.	STATE PROJECT NO.		HIGHWAY NO.
HJL	6	(SEE TITLE SHEET)		SH 289
GRAPHICS HJL	STATE	DISTRICT	COUNTY	SHEET NO.
CHECK NVS	TEXAS	DALLAS	COLLIN	299
CHECK NVS	CONTROL 0091	SECTION 04	JOB 055	

R-201104-01

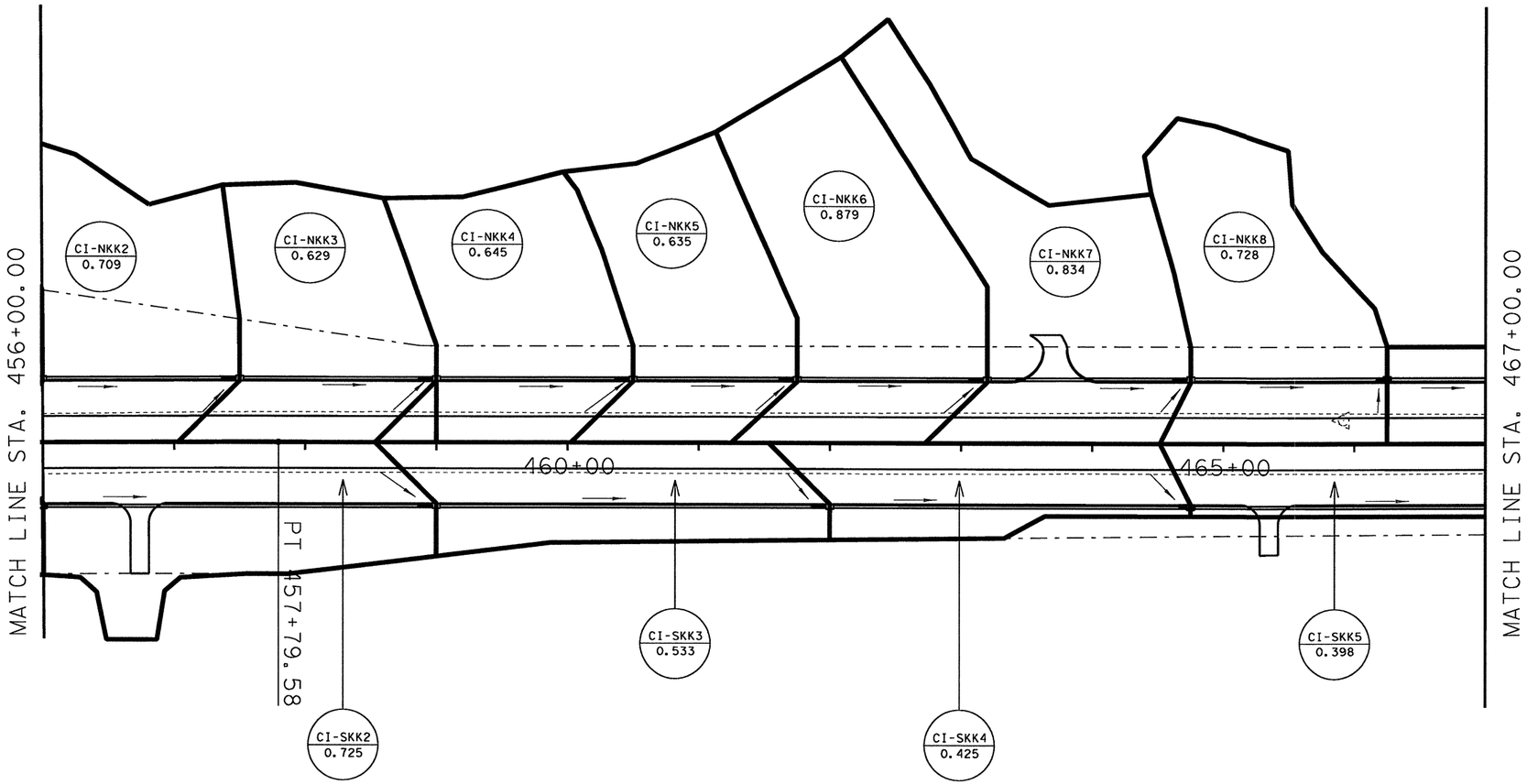

DRAINAGE LEGEND

- DRAINAGE BOUNDARY
- XX / X.XX — DRAINAGE AREA NAME / AREA (ACRES)
- FLOW DIRECTION
- EXIST. ROW
- EXIST. DRAINAGE EASEMENT
- PROPOSED ROW

STATE OF TEXAS
NICHOLAS VON SPENCER
93702
LICENSED PROFESSIONAL ENGINEER

Signature of Registrant & Date, P.E. 4-7-11

Texas Department of Transportation ©2011

SH 289-STORM SEWER DRAINAGE AREA (STA 456+00 TO STA 467+00)

SCALE: 1" = 100' SHEET 16 OF 21

DESIGN	FED. RD. DIV. NO.	STATE PROJECT NO.		HIGHWAY NO.
HJL	6	(SEE TITLE SHEET)		SH 289
GRAPHICS	STATE	DISTRICT	COUNTY	SHEET NO.
HJL	TEXAS	DALLAS	COLLIN	300
CHECK	CONTROL	SECTION	JOB	
NVS	0091	04	055	
CHECK NVS				

R-201104-01

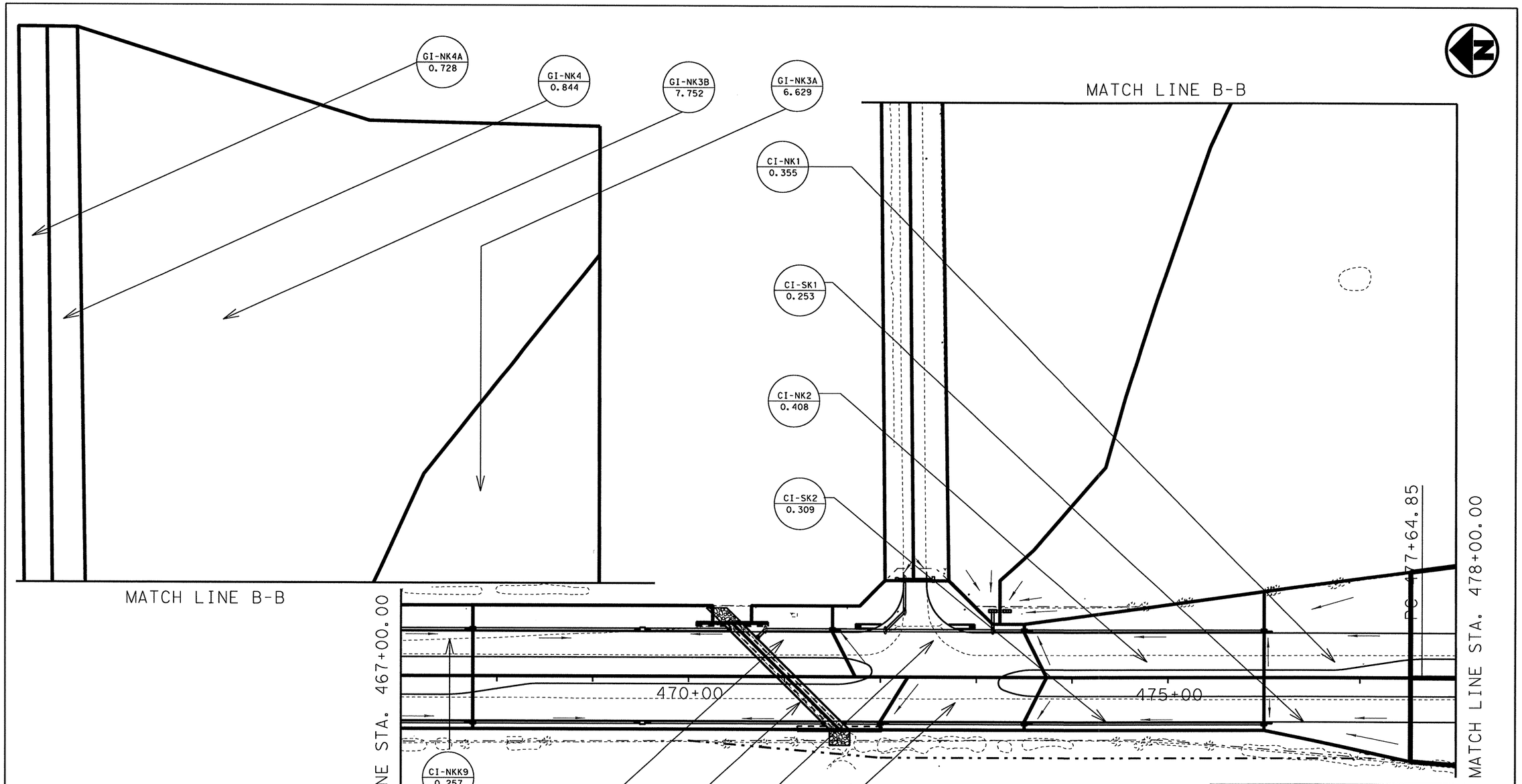

DRAINAGE LEGEND

- DRAINAGE BOUNDARY
- XX / X.XX — DRAINAGE AREA NAME / AREA (ACRES)
- FLOW DIRECTION
- EXIST. ROW
- EXIST. DRAINAGE EASEMENT
- PROPOSED ROW

STATE OF TEXAS
NICHOLAS VON SPENCER
93702
LICENSED PROFESSIONAL ENGINEER

Signature of Registrant , P.E. & Date 4-7-11

Texas Department of Transportation
©2011

SH 289-STORM SEWER DRAINAGE AREA (STA 467+00 TO STA 478+00)

SCALE: 1"= 100' SHEET 17 OF 21

DESIGN	FED. RD. DIV. NO.	STATE PROJECT NO.		HIGHWAY NO.
HJL	6	(SEE TITLE SHEET)		SH 289
GRAPHICS HJL	STATE	DISTRICT	COUNTY	SHEET NO.
CHECK NVS	TEXAS	DALLAS	COLLIN	301
CHECK	CONTROL	SECTION	JOB	
NVS	0091	04	055	

R-201104-01

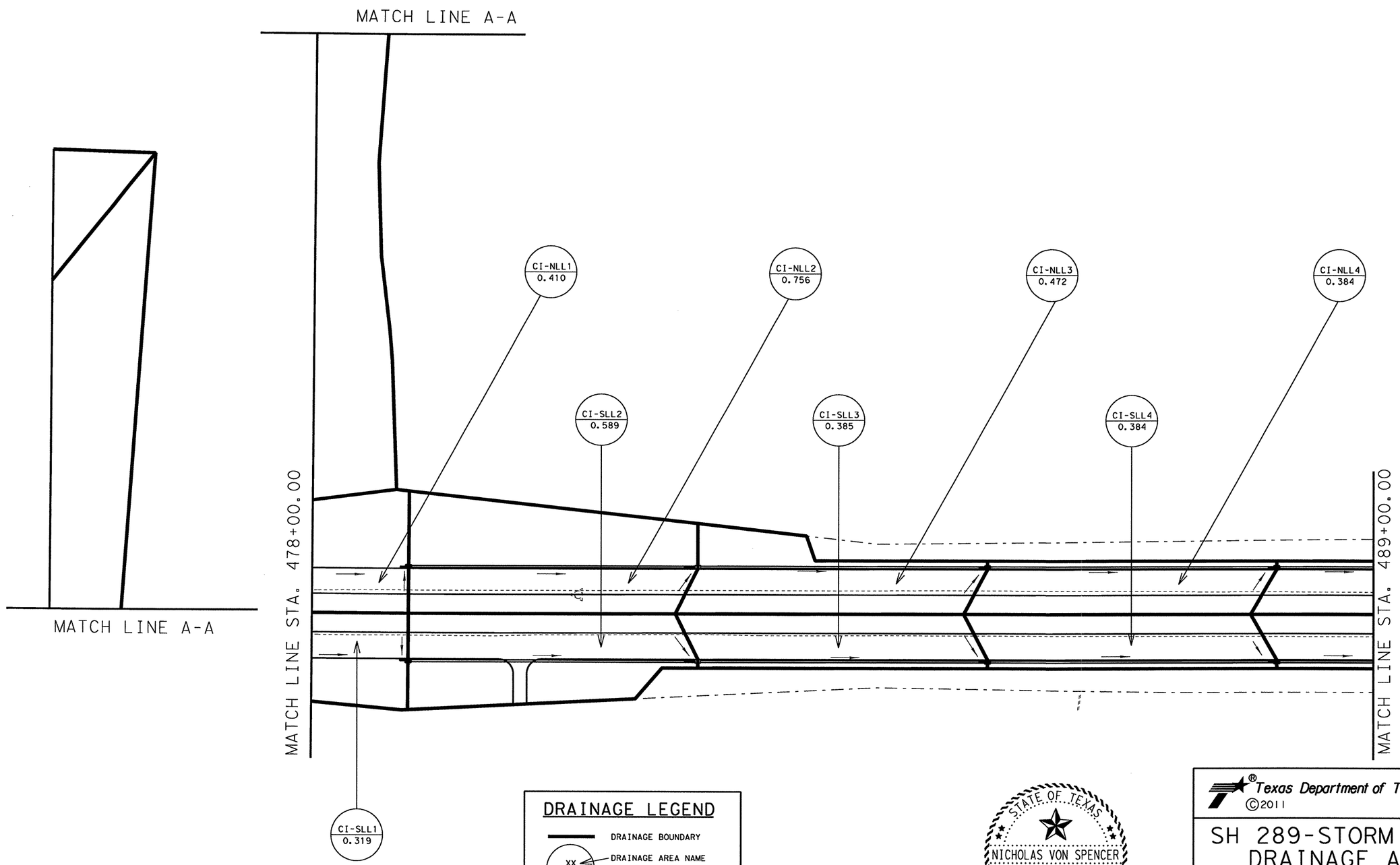

DRAINAGE LEGEND

- DRAINAGE BOUNDARY
- XX — DRAINAGE AREA NAME
- X.XX — AREA (ACRES)
- FLOW DIRECTION
- EXIST. ROW
- EXIST. DRAINAGE EASEMENT
- PROPOSED ROW

STATE OF TEXAS
NICHOLAS VON SPENCER
93702
LICENSED
PROFESSIONAL ENGINEER

Nicholas Von Spencer, P.E. 4-7-11
Signature of Registrant & Date

Texas Department of Transportation
©2011

SH 289-STORM SEWER DRAINAGE AREA (STA 478+00 TO STA 489+00)

SCALE: 1"= 100'

SHEET 18 OF 21

DESIGN	FED. RD. DIV. NO.	STATE PROJECT NO.		HIGHWAY NO.
HJL	6	(SEE TITLE SHEET)		SH 289
GRAPHICS	STATE	DISTRICT	COUNTY	SHEET NO.
HJL	TEXAS	DALLAS	COLLIN	302
CHECK	CONTROL	SECTION	JOB	
NVS	0091	04	055	
CHECK				
NVS				

R-201104-01

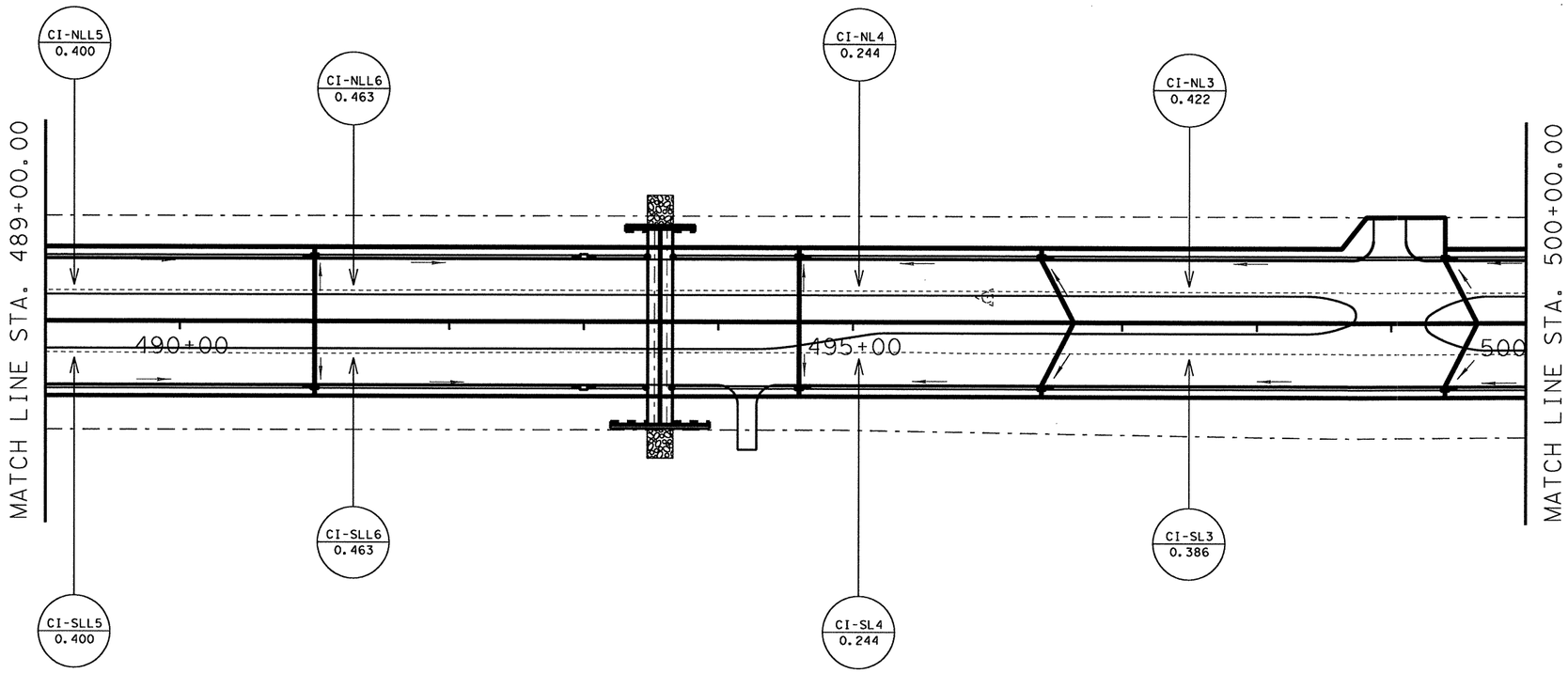

DRAINAGE LEGEND

- DRAINAGE BOUNDARY
- XX / X.XX — DRAINAGE AREA NAME / AREA (ACRES)
- FLOW DIRECTION
- EXIST. ROW
- EXIST. DRAINAGE EASEMENT
- PROPOSED ROW

STATE OF TEXAS
NICHOLAS VON SPENCER
93702
LICENSED
PROFESSIONAL ENGINEER

Nicholas V Spencer, P.E. 4-7-11
Signature of Registrant & Date

Texas Department of Transportation
©2011

SH 289-STORM SEWER DRAINAGE AREA (STA 489+00 TO STA 500+00)

SCALE: 1"= 100'

SHEET 19 OF 21

DESIGN	FED. RD. DIV. NO.	STATE PROJECT NO.		HIGHWAY NO.
HJL	6	(SEE TITLE SHEET)		SH 289
GRAPHICS HJL	STATE	DISTRICT	COUNTY	SHEET NO.
CHECK NVS	TEXAS	DALLAS	COLLIN	303
CHECK	CONTROL	SECTION	JOB	
NVS	0091	04	055	

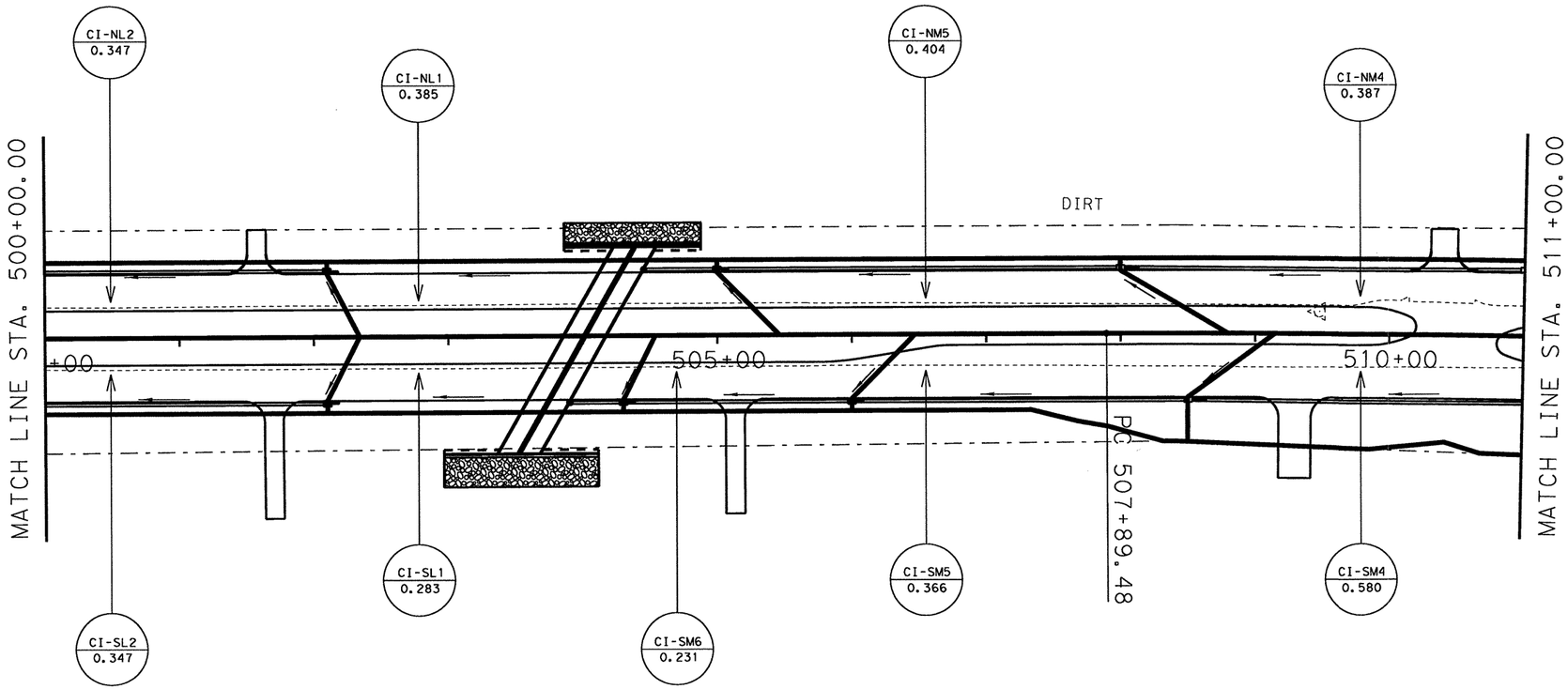

DRAINAGE LEGEND

- DRAINAGE BOUNDARY
- XX / X.XX — DRAINAGE AREA NAME / AREA (ACRES)
- FLOW DIRECTION
- EXIST. ROW
- EXIST. DRAINAGE EASEMENT
- PROPOSED ROW

STATE OF TEXAS
NICHOLAS VON SPENCER
93702
LICENSED PROFESSIONAL ENGINEER

Signature of Registrant & Date, P.E. 4-7-11

Texas Department of Transportation
©2011

SH 289-STORM SEWER DRAINAGE AREA (STA 500+00 TO STA 511+00)

SCALE: 1"= 100'

SHEET 20 OF 21

DESIGN	FED. RD. DIV. NO.	STATE PROJECT NO.		HIGHWAY NO.
HJL	6	(SEE TITLE SHEET)		SH 289
GRAPHICS HJL	STATE	DISTRICT	COUNTY	SHEET NO.
CHECK NVS	TEXAS	DALLAS	COLLIN	304
CHECK NVS	CONTROL	SECTION	JOB	
	0091	04	055	

R-201104-01

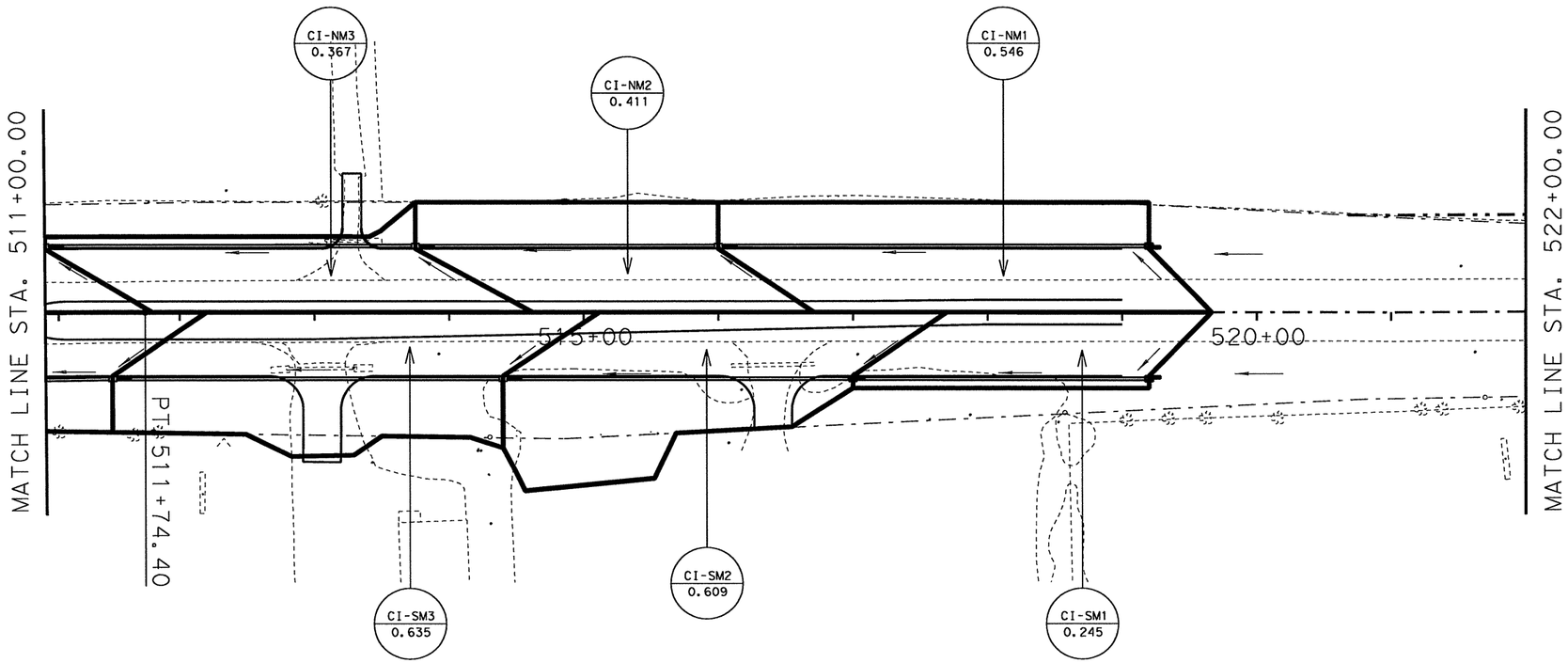

DRAINAGE LEGEND

- DRAINAGE BOUNDARY
- XX — DRAINAGE AREA NAME
- X.XX — AREA (ACRES)
- FLOW DIRECTION
- EXIST. ROW
- EXIST. DRAINAGE EASEMENT
- PROPOSED ROW

STATE OF TEXAS
NICHOLAS VON SPENCER
93702
LICENSED
PROFESSIONAL ENGINEER

Signature of Registrant , P.E. & Date 4-7-11

Texas Department of Transportation
©2011

SH 289 DRAINAGE AREAS (STA 511+00 TO STA 522+00)

SCALE: 1"= 100' SHEET 21 OF 21

DESIGN	FED. RD. DIV. NO.	STATE PROJECT NO.		HIGHWAY NO.
HJL	6	(SEE TITLE SHEET)		SH 289
GRAPHICS HJL	STATE	DISTRICT	COUNTY	SHEET NO.
CHECK NVS	TEXAS	DALLAS	COLLIN	305
CHECK NVS	CONTROL	SECTION	JOB	
	0091	04	055	

R-201104-01

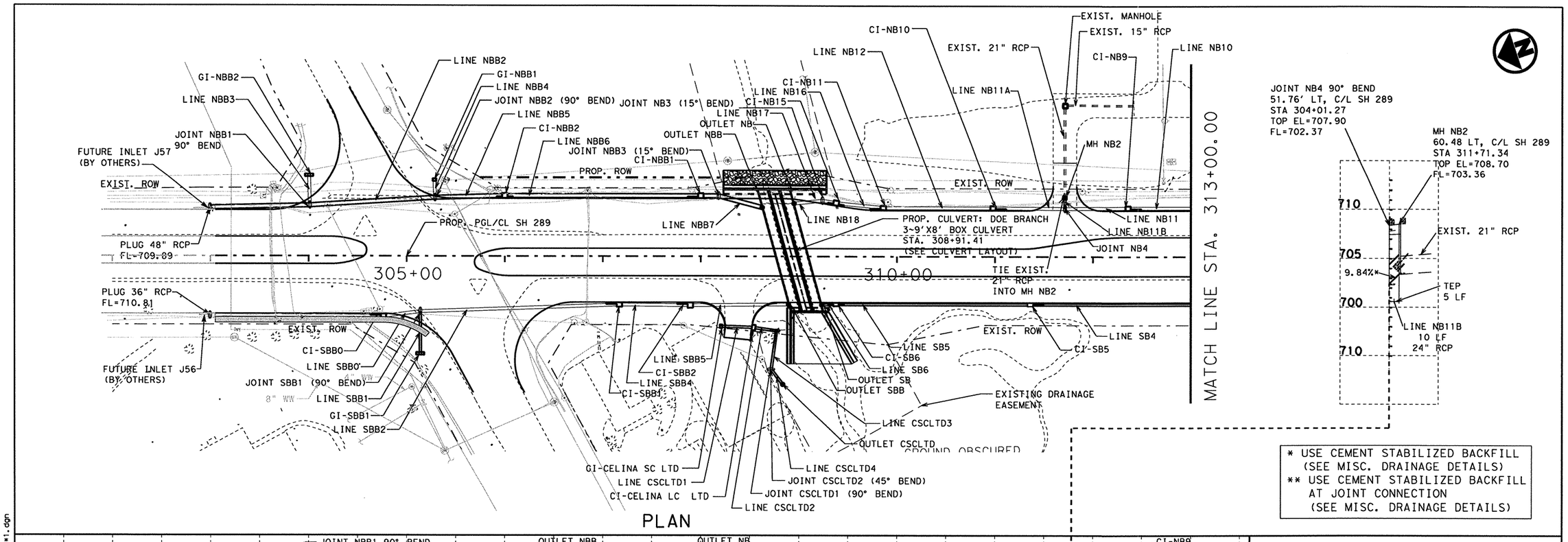

PLAN

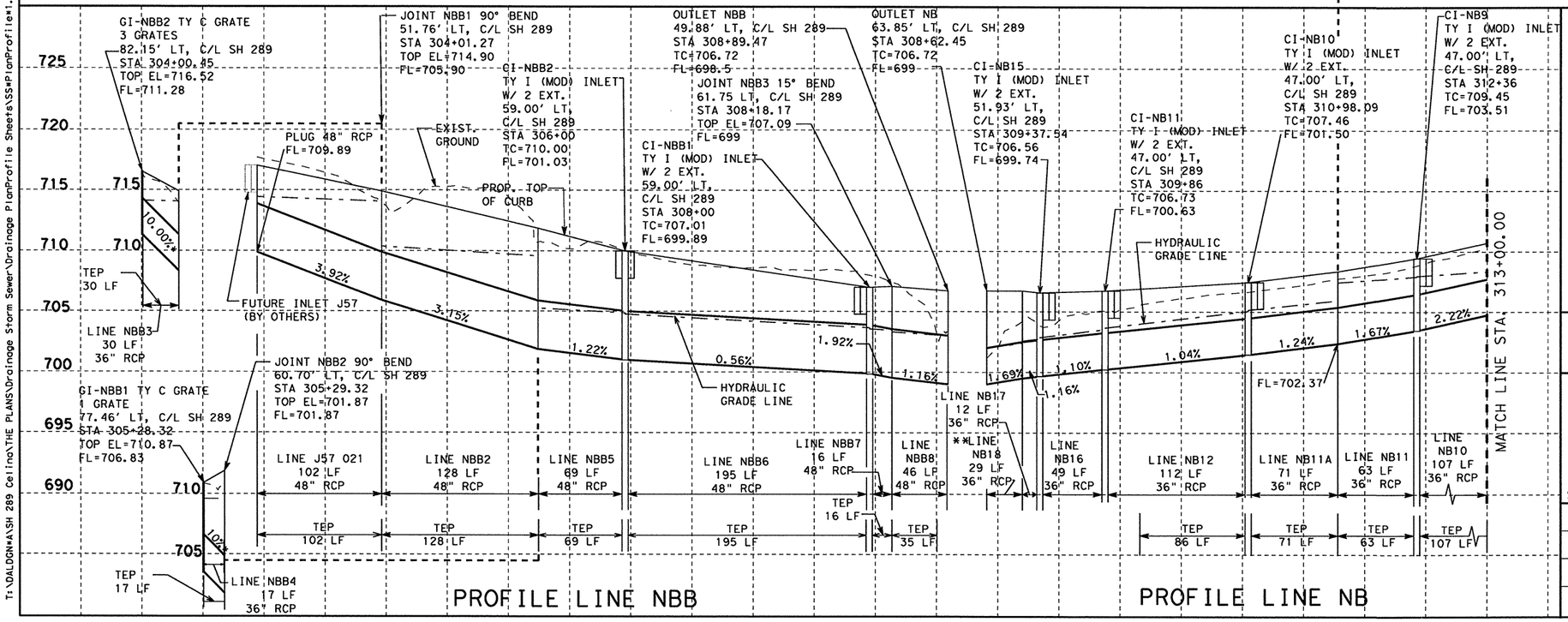

STATE OF TEXAS
NICHOLAS VON SPENCER
93702
LICENSED
PROFESSIONAL ENGINEER

Signature of Registrant & Date, P.E. 6-2-11

Texas Department of Transportation
© 2011

SH 289 DRAINAGE PLAN AND PROFILE

BEGIN STA. 303+05.00 TO STA. 313+00.00

SCALE: V: 1"=10' H: 1"=100' SHEET 1 OF 40

DESIGN NVS	FED. RD. DIV. NO. 6	STATE PROJECT NO. (SEE TITLE SHEET)		HIGHWAY NO. SH 289
GRAPHICS NVS	STATE	DISTRICT	COUNTY	SHEET NO.
CHECK NVS	TEXAS	DALLAS	COLLIN	306
CHECK NVS	CONTROL 0091	SECTION 04	JOB 055	

T:\DALDGN#\SH 289 Celina\THE PLANS\Drainage Storm Sewer\Drainage PlanProfile Sheets\SS#PlanProfile1.dgn

6/2/2011

R-201104-01

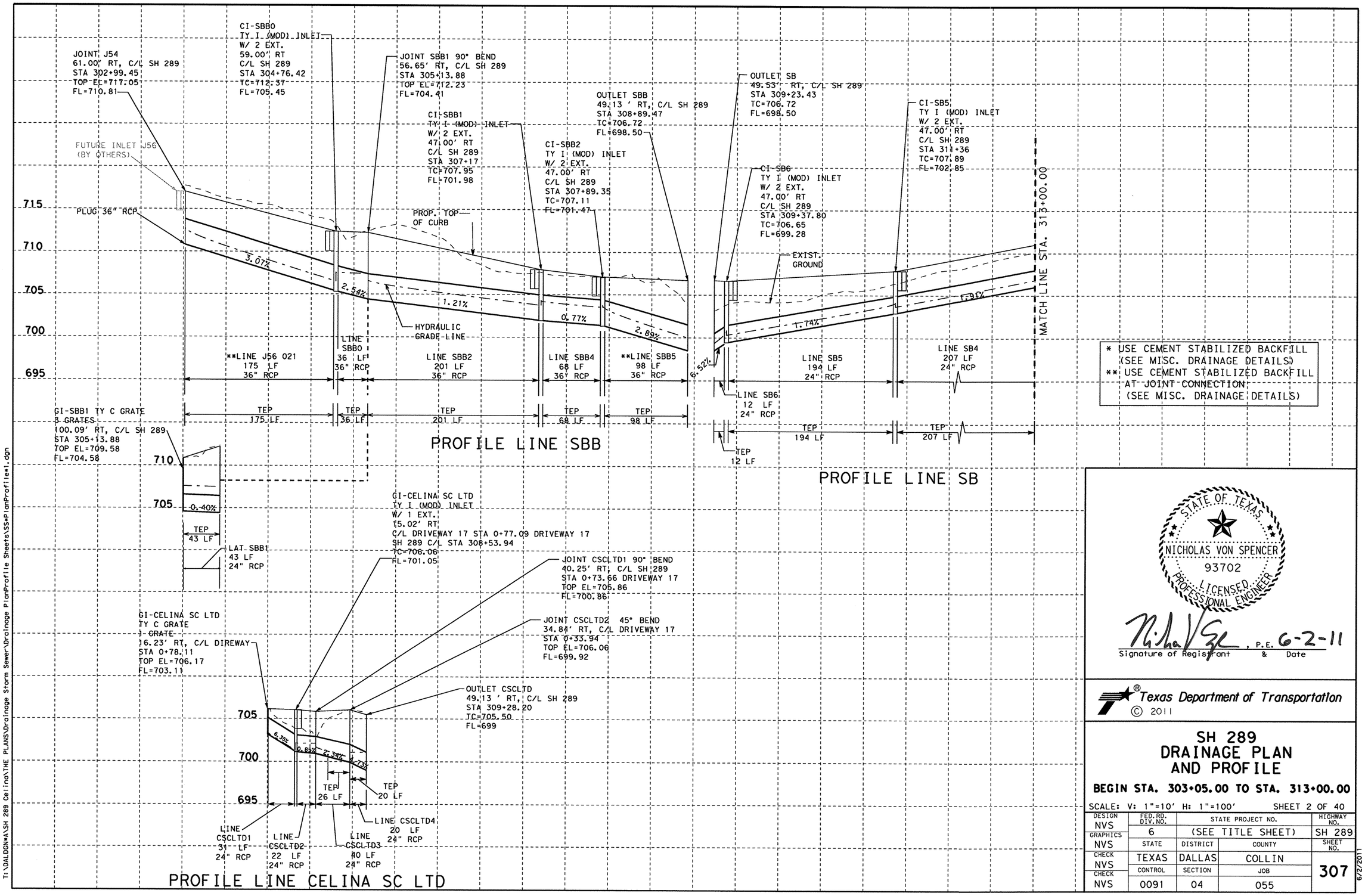

STATE OF TEXAS
NICHOLAS VON SPENCER
93702
LICENSED
PROFESSIONAL ENGINEER

Signature of Registrant & Date, P.E. 6-2-11

Texas Department of Transportation
© 2011

SH 289 DRAINAGE PLAN AND PROFILE

BEGIN STA. 303+05.00 TO STA. 313+00.00

SCALE: V: 1"=10' H: 1"=100' SHEET 2 OF 40

DESIGN	FED. RD. DIV. NO.	STATE PROJECT NO.		HIGHWAY NO.
NVS	6	(SEE TITLE SHEET)		SH 289
GRAPHICS NVS	STATE	DISTRICT	COUNTY	SHEET NO.
CHECK NVS	TEXAS	DALLAS	COLLIN	307
CHECK NVS	CONTROL	SECTION	JOB	
	0091	04	055	

T:\DALDGN\A\SH 289 Celina\THE PLANS\Drainage Storm Sewer\Drainage PlanProfile Sheets\SS\PlanProfile#1.dgn

6/2/2011

R-201104-01

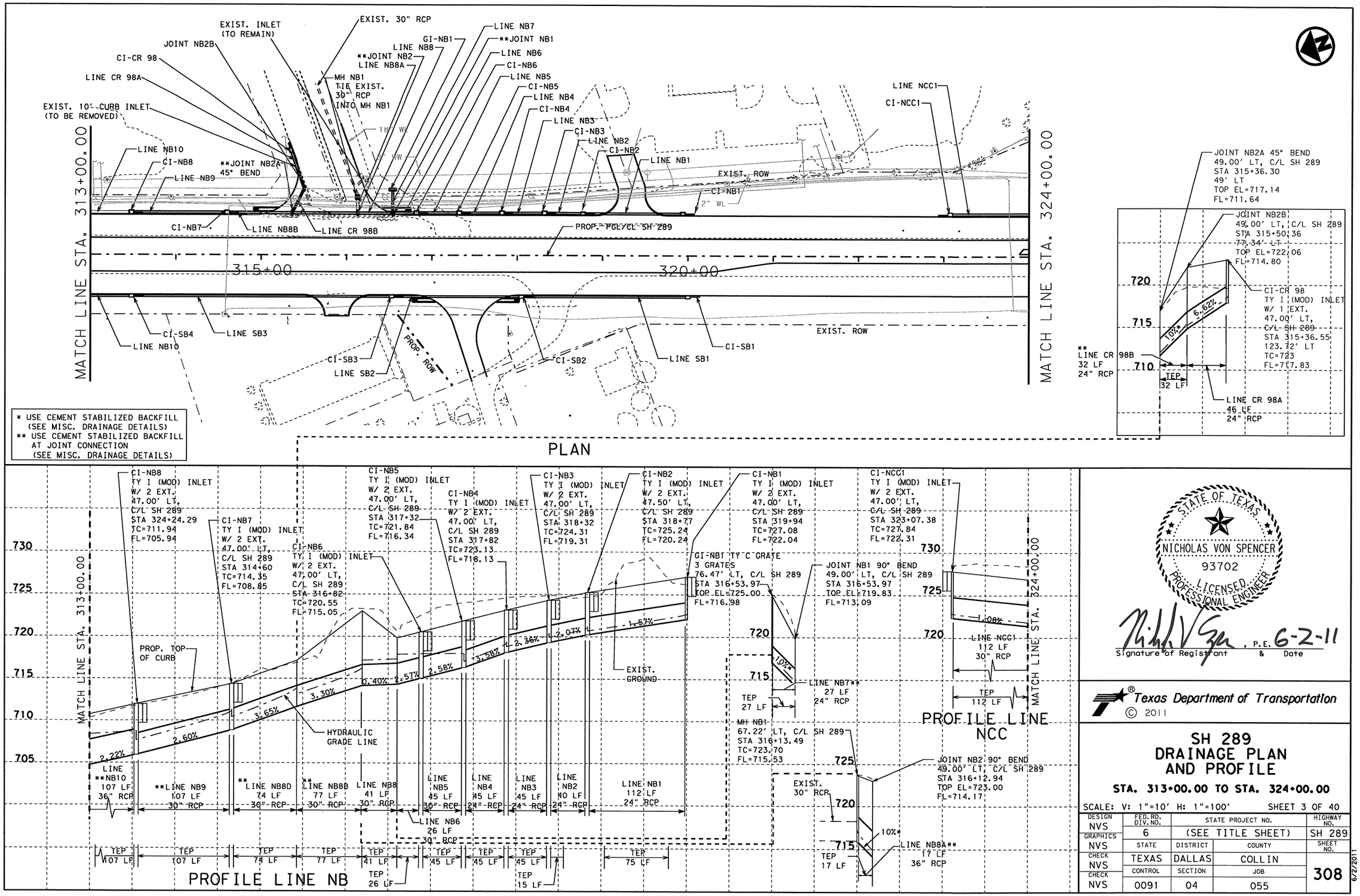
EXIST. INLET (TO REMAIN)
EXIST. 30" RCP
JOINT NB2B
CI-CR 98
LINE CR 98A
EXIST. 10'-CURB INLET (TO BE REMOVED)
GI-NB1
LINE NB8
**JOINT NB2
LINE NB8A
MH NB1 TIE EXIST. 30" RCP INTO MH NB1
LINE NB7
**JOINT NB1
LINE NB6
CI-NB6
LINE NB5
CI-NB5
LINE NB4
CI-NB4
LINE NB3
CI-NB3
LINE NB2
CI-NB2
LINE NB1
LINE NCC1
CI-NCC1
LINE NB10
CI-NB8
LINE NB9
**JOINT NB2A 45° BEND
CI-NB7
LINE NB8B
LINE CR 98B
PROP. PGL/CL SH 289
EXIST. ROW
CI-NB1
2" WL
MATCH LINE STA. 313+00.00
MATCH LINE STA. 324+00.00
315+00
320+00
CI-SB4
LINE SB3
LINE NB10
CI-SB3
LINE SB2
PROP. ROW
CI-SB2
LINE SB1
CI-SB1
EXIST. ROW
JOINT NB2A 45° BEND
49.00' LT, C/L SH 289
STA 315+36.30
49' LT
TOP EL=717.14
FL=711.64
JOINT NB2B
49.00' LT, C/L SH 289
STA 315+50.36
77.34' LT
TOP EL=722.06
FL=714.80
CI-CR 98
TY I (MOD) INLET
W/ 1 EXT.
47.00' LT,
C/L SH 289
STA 315+36.55
123.72' LT
TC=723
FL=717.83
720
715
710
10%
6.62%
** LINE CR 98B
32 LF
24" RCP
TEP
32 LF
LINE CR 98A
46 LF
24" RCP
* USE CEMENT STABILIZED BACKFILL (SEE MISC. DRAINAGE DETAILS)
** USE CEMENT STABILIZED BACKFILL AT JOINT CONNECTION (SEE MISC. DRAINAGE DETAILS)
PLAN
CI-NB8
TY I (MOD) INLET
W/ 2 EXT.
47.00' LT,
C/L SH 289
STA 324+24.29
TC=711.94
FL=705.94
CI-NB7
TY I (MOD) INLET
W/ 2 EXT.
47.00' LT,
C/L SH 289
STA 314+60
TC=714.35
FL=708.85
CI-NB6
TY I (MOD) INLET
W/ 2 EXT.
47.00' LT,
C/L SH 289
STA 316+82
TC=720.55
FL=715.05
CI-NB5
TY I (MOD) INLET
W/ 2 EXT.
47.00' LT,
C/L SH 289
STA 317+32
TC=721.84
FL=716.34
CI-NB4
TY I (MOD) INLET
W/ 2 EXT.
47.00' LT,
C/L SH 289
STA 317+82
TC=723.13
FL=718.13
CI-NB3
TY I (MOD) INLET
W/ 2 EXT.
47.00' LT,
C/L SH 289
STA 318+32
TC=724.31
FL=719.31
CI-NB2
TY I (MOD) INLET
W/ 2 EXT.
47.50' LT,
C/L SH 289
STA 318+77
TC=725.24
FL=720.24
CI-NB1
TY I (MOD) INLET
W/ 2 EXT.
47.00' LT,
C/L SH 289
STA 319+94
TC=727.08
FL=722.04
CI-NCC1
TY I (MOD) INLET
W/ 2 EXT.
47.00' LT,
C/L SH 289
STA 323+07.38
TC=727.84
FL=722.31
GI-NB1 TY C GRATE
3 GRATES
76.47' LT, C/L SH 289
STA 316+53.97
TOP EL=725.00
FL=716.98
JOINT NB1 90° BEND
49.00' LT, C/L SH 289
STA 316+53.97
TOP EL=719.83
FL=713.09
730
725
720
715
710
705
MATCH LINE STA. 313+00.00
MATCH LINE STA. 324+00.00
PROP. TOP OF CURB
HYDRAULIC GRADE LINE
EXIST. GROUND
2.22%
2.60%
3.65%
3.30%
0.40%
2.57%
2.58%
3.58%
2.36%
2.07%
1.57%
1.08%
10%
LINE **NB10 107 LF 36" RCP
**LINE NB9 107 LF 30" RCP
** LINE NB8D 74 LF 30" RCP
** LINE NB8B 77 LF 30" RCP
LINE NB8 41 LF 30" RCP
LINE NB5 45 LF 30" RCP
LINE NB4 45 LF 24" RCP
LINE NB3 45 LF 24" RCP
LINE NB2 40 LF 24" RCP
LINE NB1 112 LF 24" RCP
LINE NB6 26 LF 30" RCP
TEP 107 LF
TEP 107 LF
TEP 74 LF
TEP 77 LF
TEP 41 LF
TEP 45 LF
TEP 45 LF
TEP 45 LF
TEP 75 LF
TEP 26 LF
TEP 15 LF
PROFILE LINE NB
LINE NB7** 27 LF 24" RCP
TEP 27 LF
MH NB1
67.22' LT, C/L SH 289
STA 316+13.49
TC=723.70
FL=715.53
EXIST. 30" RCP
JOINT NB2 90° BEND
49.00' LT, C/L SH 289
STA 316+12.94
TOP EL=723.00
FL=714.17
LINE NB8A**
17 LF
36" RCP
TEP 17 LF
LINE NCC1 112 LF 30" RCP
TEP 112 LF
PROFILE LINE NCC
STATE OF TEXAS
NICHOLAS VON SPENCER
93702
LICENSED PROFESSIONAL ENGINEER
Signature of Registrant & Date
P.E. 6-2-11
Texas Department of Transportation
© 2011
SH 289
DRAINAGE PLAN AND PROFILE
STA. 313+00.00 TO STA. 324+00.00
SCALE: V: 1"=10' H: 1"=100'
SHEET 3 OF 40
DESIGN NVS
GRAPHICS NVS
CHECK NVS
CHECK NVS
FED. RD. DIV. NO. 6
STATE PROJECT NO. (SEE TITLE SHEET)
HIGHWAY NO. SH 289
STATE TEXAS
DISTRICT DALLAS
COUNTY COLLIN
SHEET NO. 308
CONTROL 0091
SECTION 04
JOB 055
T:\DALDGN\A\SH 289 Collin\THE PLANS\Drainage Storm Sewer\Drainage PlanProfile Sheets\SS+PlanProfile#2.dgn
6/2/2011
R-201104-01

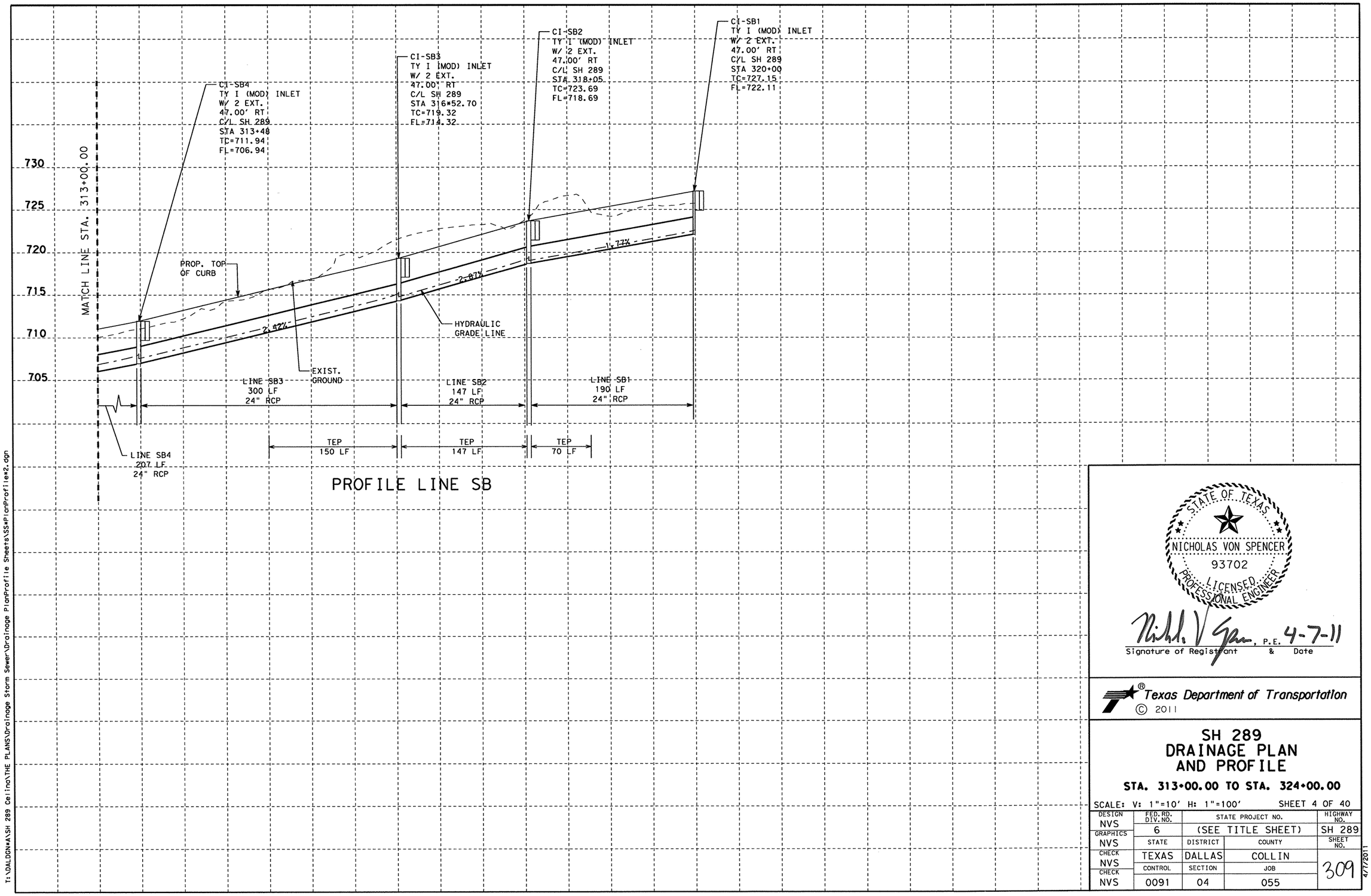

PROFILE LINE SB

STATE OF TEXAS
NICHOLAS VON SPENCER
93702
LICENSED
PROFESSIONAL ENGINEER

Nicholas V Spencer, P.E. 4-7-11
Signature of Registrant & Date

Texas Department of Transportation
© 2011

SH 289 DRAINAGE PLAN AND PROFILE

STA. 313+00.00 TO STA. 324+00.00

SCALE: V: 1"=10' H: 1"=100' SHEET 4 OF 40

DESIGN	FED. RD. DIV. NO.	STATE PROJECT NO.		HIGHWAY NO.
NVS	6	(SEE TITLE SHEET)		SH 289
GRAPHICS NVS	STATE	DISTRICT	COUNTY	SHEET NO.
CHECK NVS	TEXAS	DALLAS	COLLIN	309
CHECK NVS	CONTROL	SECTION	JOB	
	0091	04	055	

T:\DALDGN\ASH 289 Celina\THE PLANS\Drainage Storm Sewer\Drainage PlanProfile Sheets\SS\PlanProfile\2.dgn

4/7/2011

R-201104-01

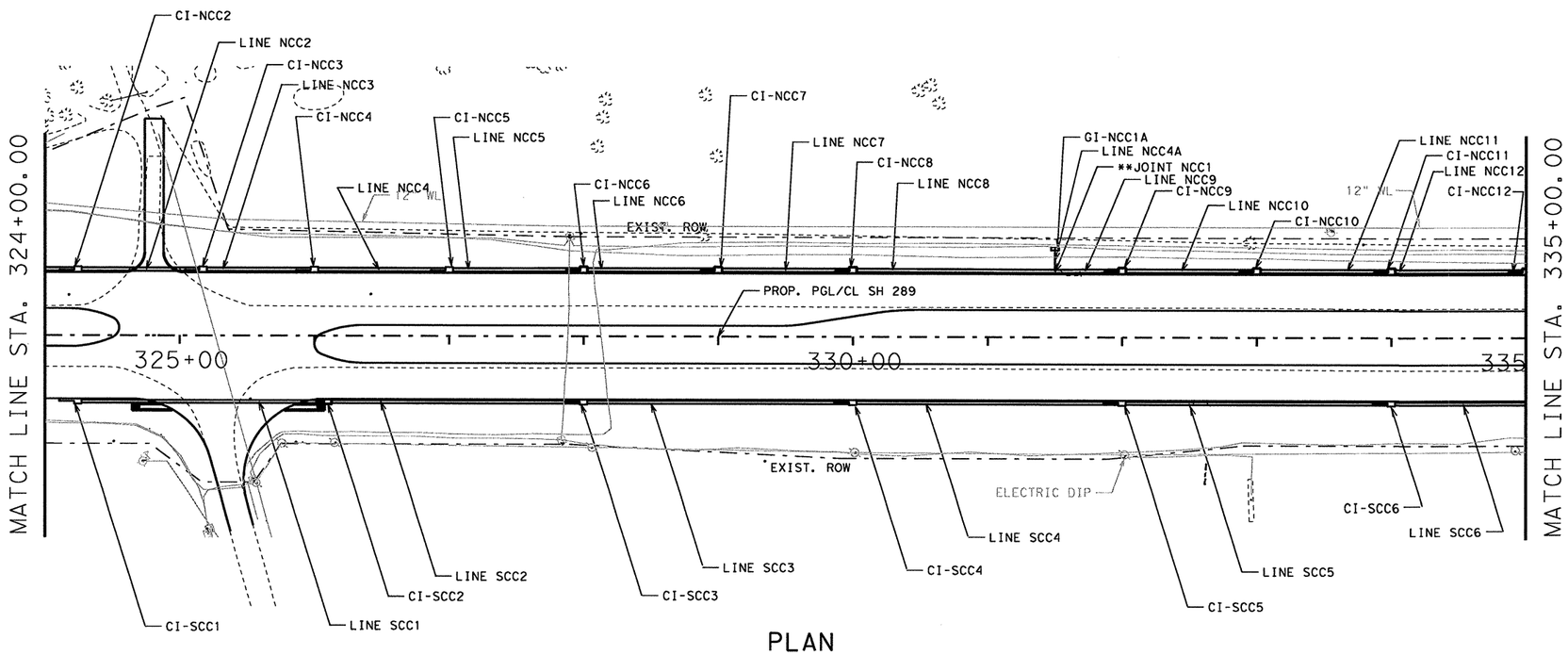

PLAN

* USE CEMENT STABILIZED BACKFILL (SEE MISC. DRAINAGE DETAILS)
** USE CEMENT STABILIZED BACKFILL AT JOINT CONNECTION (SEE MISC. DRAINAGE DETAILS)

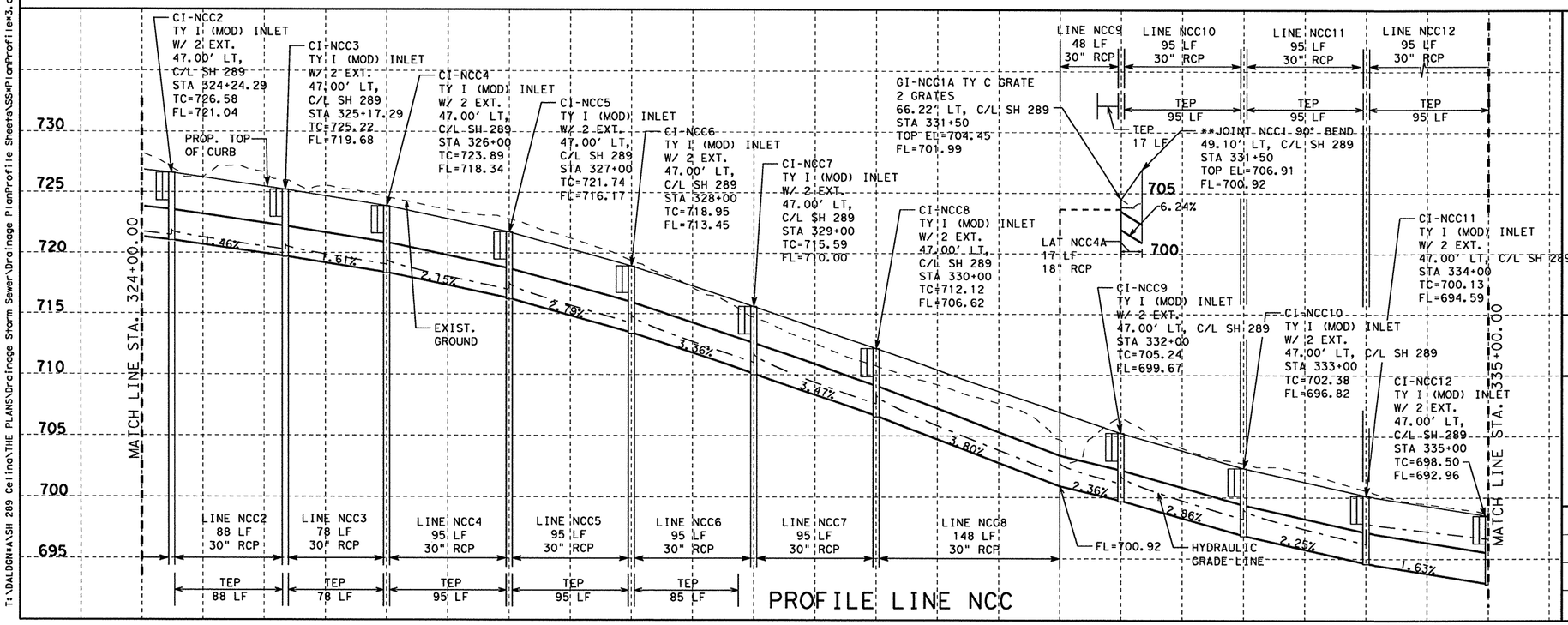

PROFILE LINE NCC

STATE OF TEXAS
NICHOLAS VON SPENCER
93702
LICENSED PROFESSIONAL ENGINEER

Nicholas Von Spencer, P.E. 4-7-11
Signature of Registrant & Date

Texas Department of Transportation
© 2011

SH 289 DRAINAGE PLAN AND PROFILE

STA. 324+00.00 TO STA. 335+00.00

SCALE: V: 1"=10' H: 1"=100' SHEET 5 OF 40

DESIGN NVS	FED. RD. DIV. NO.	STATE PROJECT NO.		HIGHWAY NO.
GRAPHICS NVS	6	(SEE TITLE SHEET)		SH 289
	STATE	DISTRICT	COUNTY	SHEET NO.
CHECK NVS	TEXAS	DALLAS	COLLIN	310
CHECK NVS	CONTROL	SECTION	JOB	
	0091	04	055	

T:\DALDGN\#ASH 289 Celina\THE PLANS\Drainage Storm Sewer\Drainage PlanProfile Sheets\SS4PlanProfile#3.dgn

4/7/2011

R-201104-01

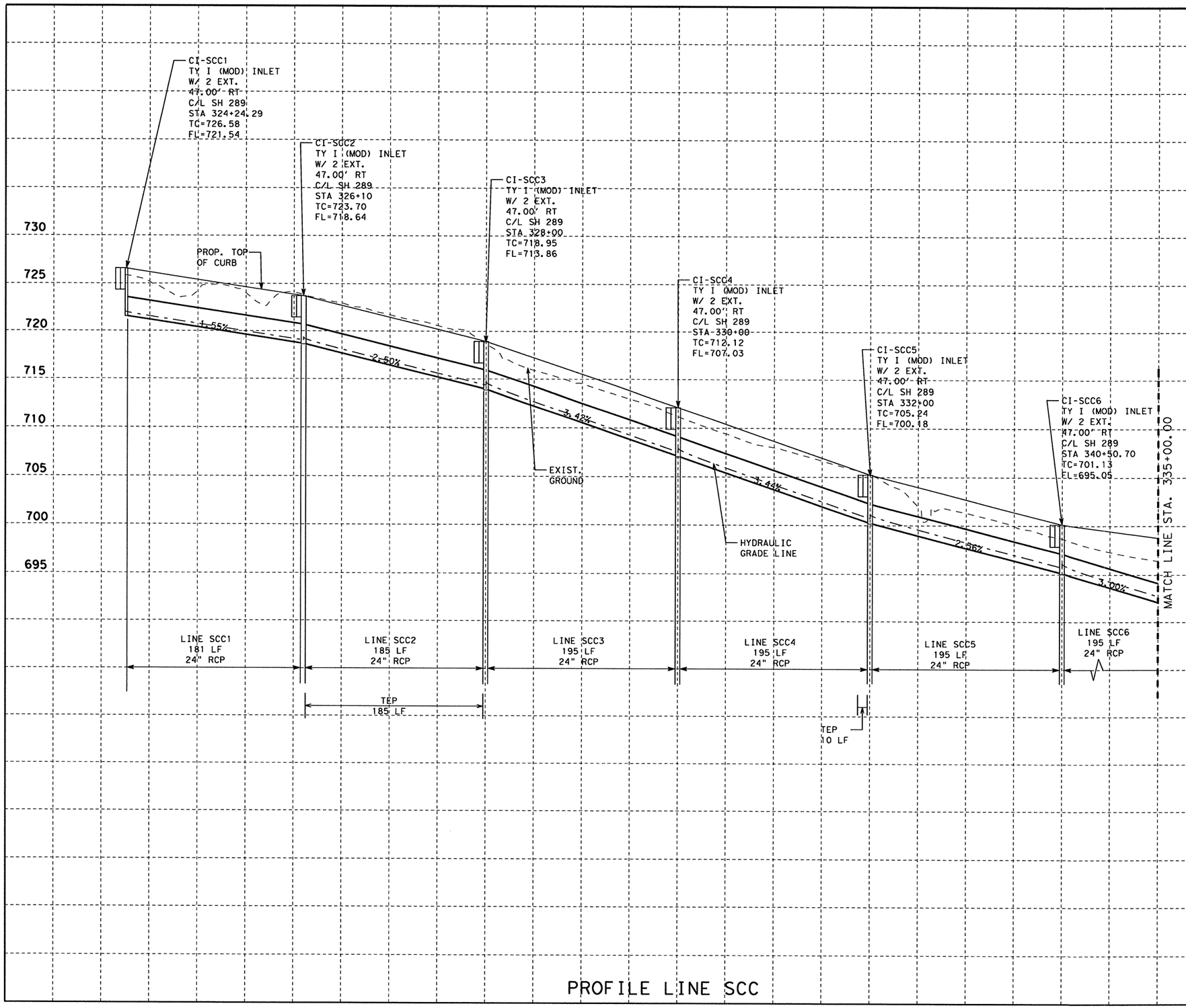

PROFILE LINE SCC

STATE OF TEXAS
NICHOLAS VON SPENCER
93702
LICENSED
PROFESSIONAL ENGINEER

Signature of Registrant & Date, P.E. 4-7-11

Texas Department of Transportation
© 2011

SH 289 DRAINAGE PLAN AND PROFILE

STA. 324+00.00 TO STA. 335+00.00

SCALE: V: 1"=10' H: 1"=100' SHEET 6 OF 40

DESIGN	FED. RD. DIV. NO.	STATE PROJECT NO.		HIGHWAY NO.
NVS	6	(SEE TITLE SHEET)		SH 289
GRAPHICS	STATE	DISTRICT	COUNTY	SHEET NO.
NVS	TEXAS	DALLAS	COLLIN	
CHECK	CONTROL	SECTION	JOB	
NVS	0091	04	055	311
CHECK				
NVS				

T:\DALDGN*A\SH 289 Celina\THE PLANS\Drainage Storm Sewer\Drainage PlanProfile Sheets\SS*PlanProfile*3.dgn

4/7/2011

R-201104-01

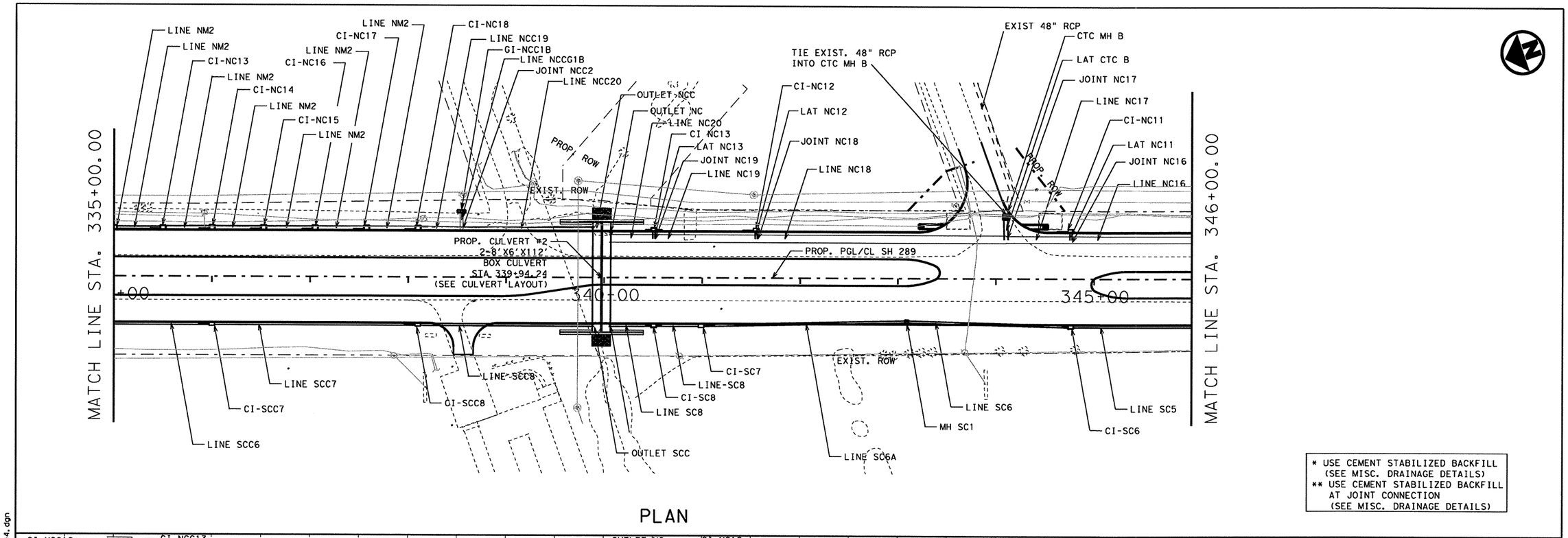

PLAN

* USE CEMENT STABILIZED BACKFILL (SEE MISC. DRAINAGE DETAILS)
** USE CEMENT STABILIZED BACKFILL AT JOINT CONNECTION (SEE MISC. DRAINAGE DETAILS)

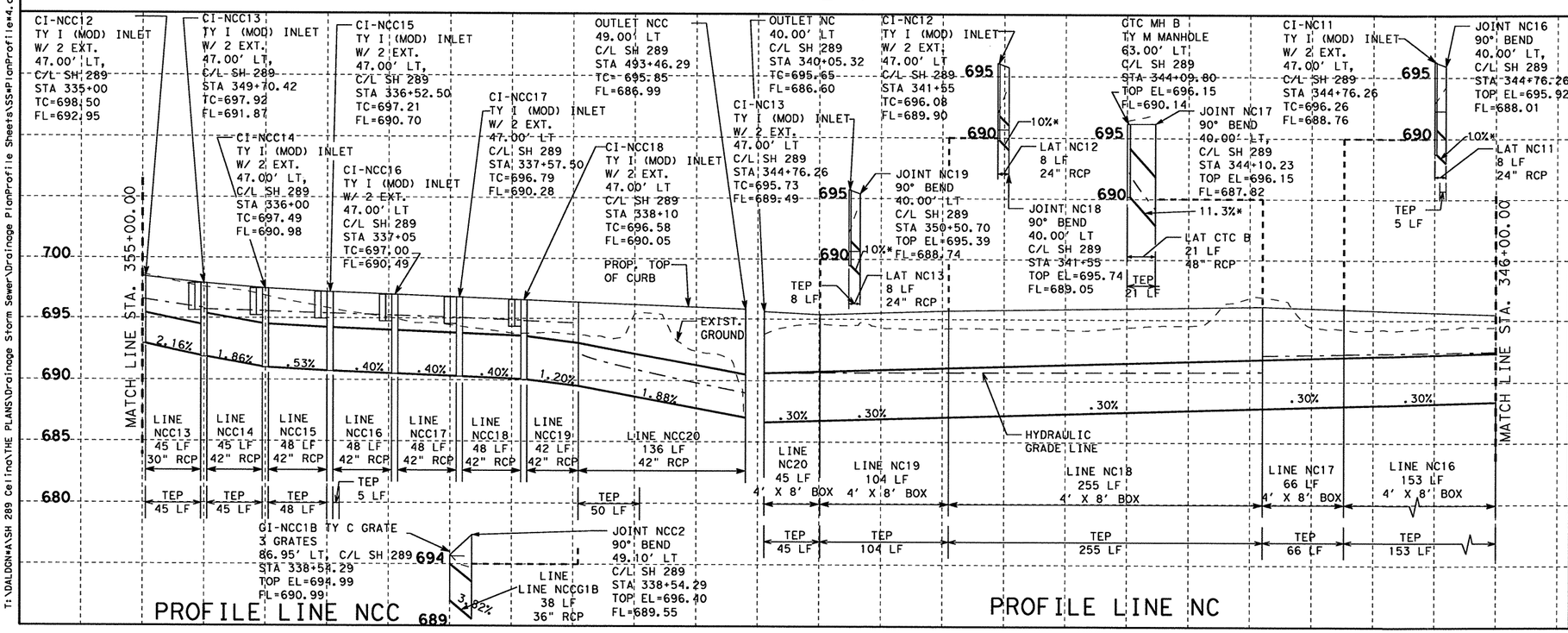

PROFILE LINE NCC

PROFILE LINE NC

STATE OF TEXAS
NICHOLAS VON SPENCER
93702
LICENSED PROFESSIONAL ENGINEER

Signature of Registrant & Date, P.E. 4-7-11

Texas Department of Transportation
© 2011

SH 289 DRAINAGE PLAN AND PROFILE

STA. 335+00.00 TO STA. 346+00.00

SCALE: V: 1"=10' H: 1"=100' SHEET 7 OF 40

DESIGN	FED. RD. DIV. NO.	STATE PROJECT NO.		HIGHWAY NO.
NVS	6	(SEE TITLE SHEET)		SH 289
GRAPHICS NVS	STATE	DISTRICT	COUNTY	SHEET NO.
CHECK NVS	TEXAS	DALLAS	COLLIN	312
CHECK NVS	CONTROL	SECTION	JOB	
	0091	04	055	

T:\DALDGN\A\SH 289 Celina\THE PLANS\Drainage Storm Sewer\Drainage PlanProfile Sheets\SS4PlanProfile4.dgn

4/7/2011

R-201104-01

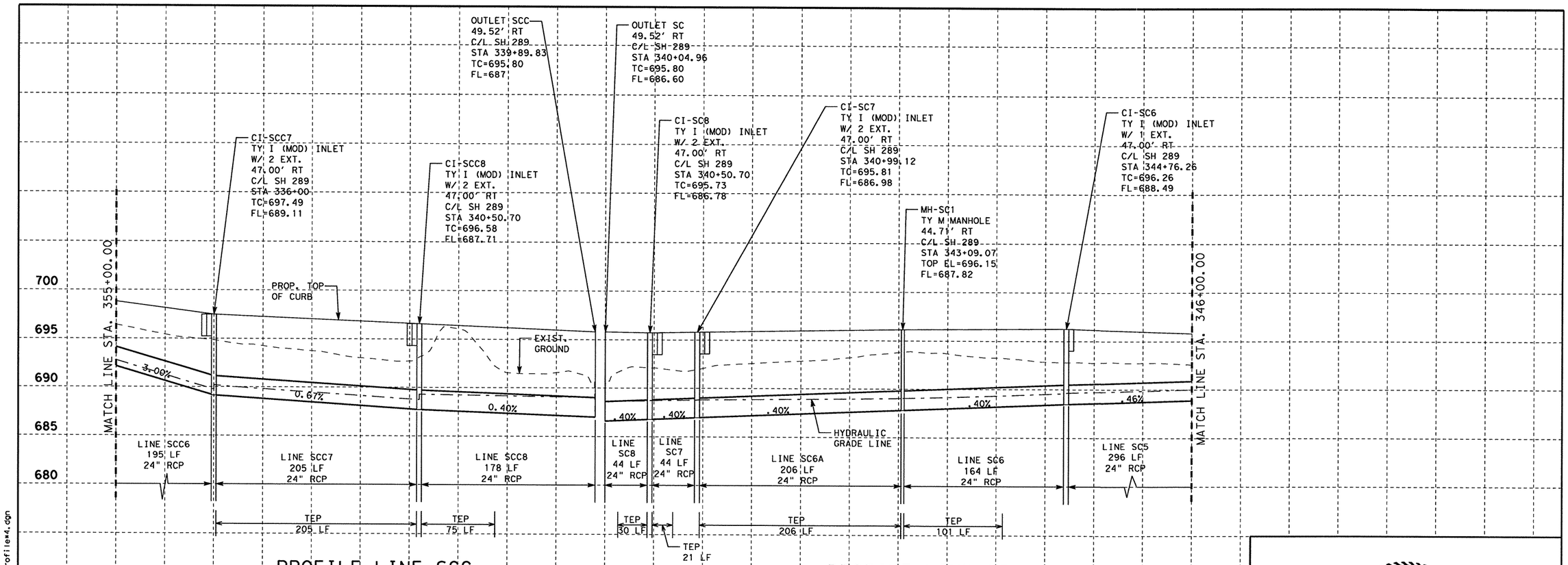

STATE OF TEXAS
NICHOLAS VON SPENCER
93702
LICENSED
PROFESSIONAL ENGINEER

Nicholas Von Spencer, P.E. 4-7-11
Signature of Registrant & Date

Texas Department of Transportation
© 2011

SH 289 DRAINAGE PLAN AND PROFILE

STA. 335+00.00 TO STA. 346+00.00

SCALE: V: 1"=10' H: 1"=100' SHEET 8 OF 40

DESIGN	FED. RD. DIV. NO.	STATE PROJECT NO.		HIGHWAY NO.
NVS	6	(SEE TITLE SHEET)		SH 289
GRAPHICS NVS	STATE	DISTRICT	COUNTY	SHEET NO.
CHECK NVS	TEXAS	DALLAS	COLLIN	313
CHECK NVS	CONTROL 0091	SECTION 04	JOB 055	

T:\DALDGN#4\SH 289 Celina\THE PLANS\Drainage Storm Sewer\Drainage PlanProfile Sheets\SS#PlanProfile#4.dgn

4/7/2011

R-201104-01

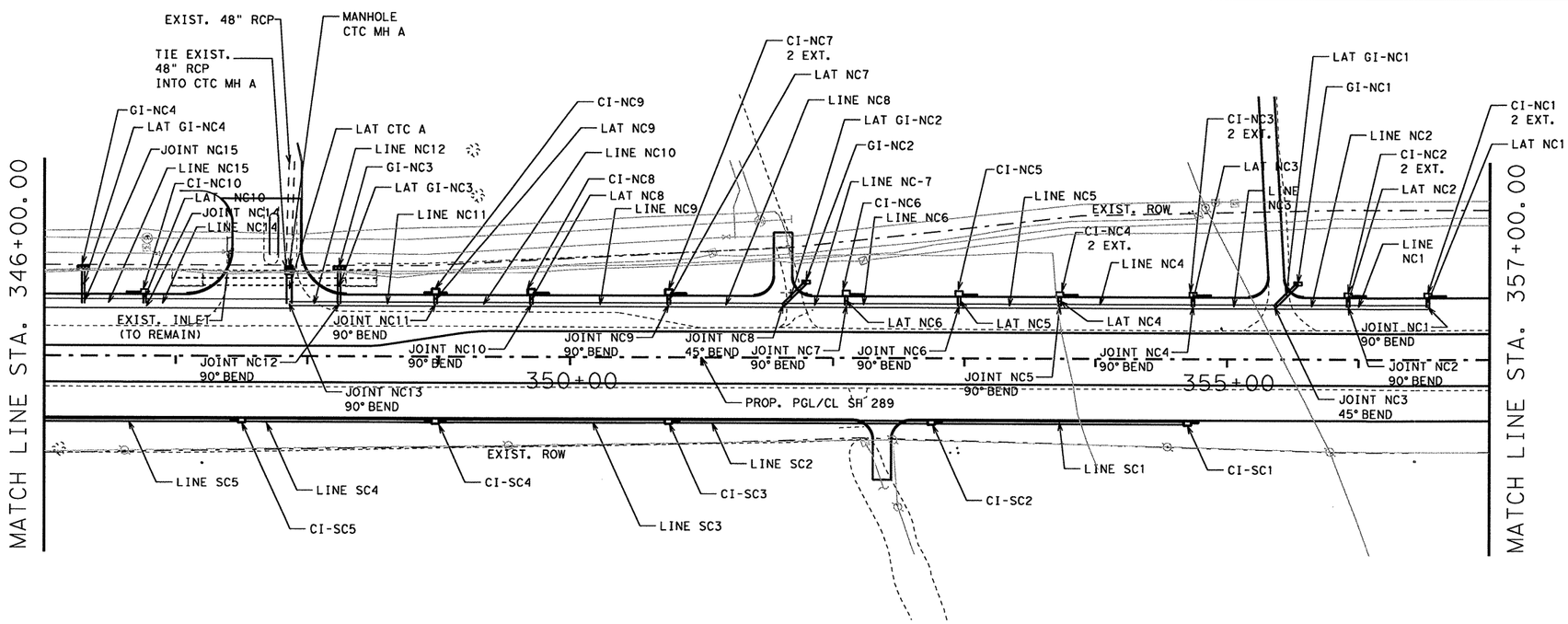

PLAN

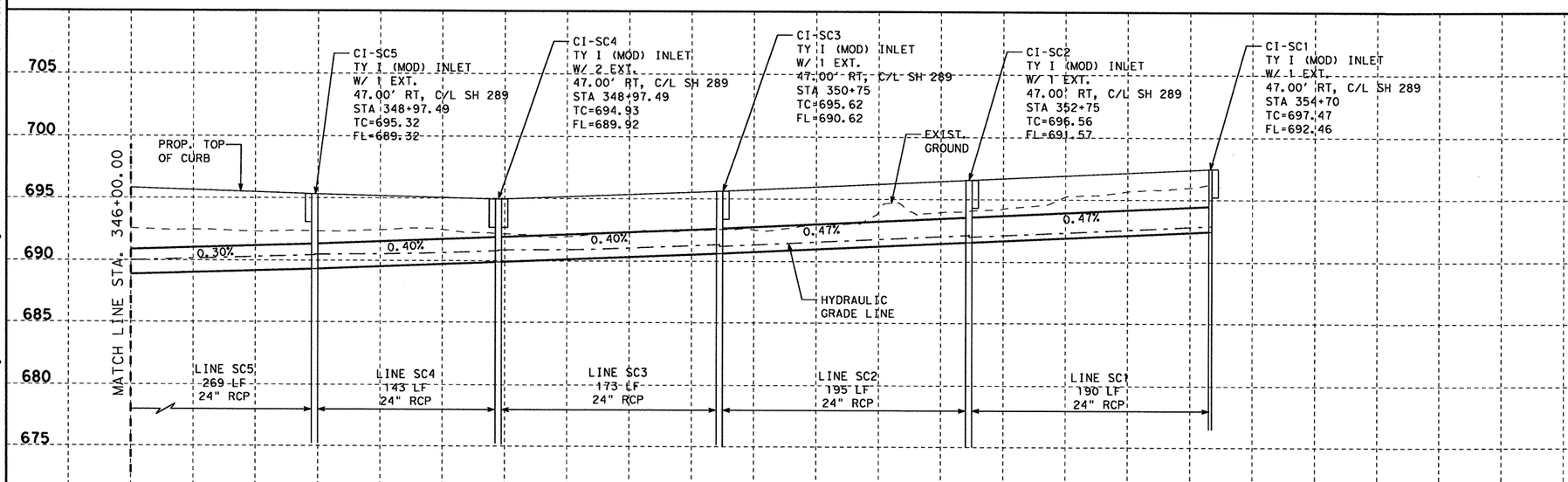

PROFILE LINE SC

STATE OF TEXAS
NICHOLAS VON SPENCER
93702
LICENSED PROFESSIONAL ENGINEER

Signature of Registrant & Date, P.E. 4-7-11

Texas Department of Transportation
© 2011

SH 289 DRAINAGE PLAN AND PROFILE

STA. 346+00.00 TO STA. 357+00.00

SCALE: V: 1"=10' H: 1"=100' SHEET 9 OF 40

DESIGN	FED. RD. DIV. NO.	STATE PROJECT NO.		HIGHWAY NO.
NVS	6	(SEE TITLE SHEET)		SH 289
GRAPHICS NVS	STATE	DISTRICT	COUNTY	SHEET NO.
CHECK NVS	TEXAS	DALLAS	COLLIN	314
CHECK NVS	CONTROL	SECTION	JOB	
	0091	04	055	

T:\DALDGN\A\SH 289 Celina\THE PLANS\Drainage Storm Sewer\Drainage PlanProfile Sheets\SS+PlanProfile+5.dgn

4/7/2011

R-201104-01

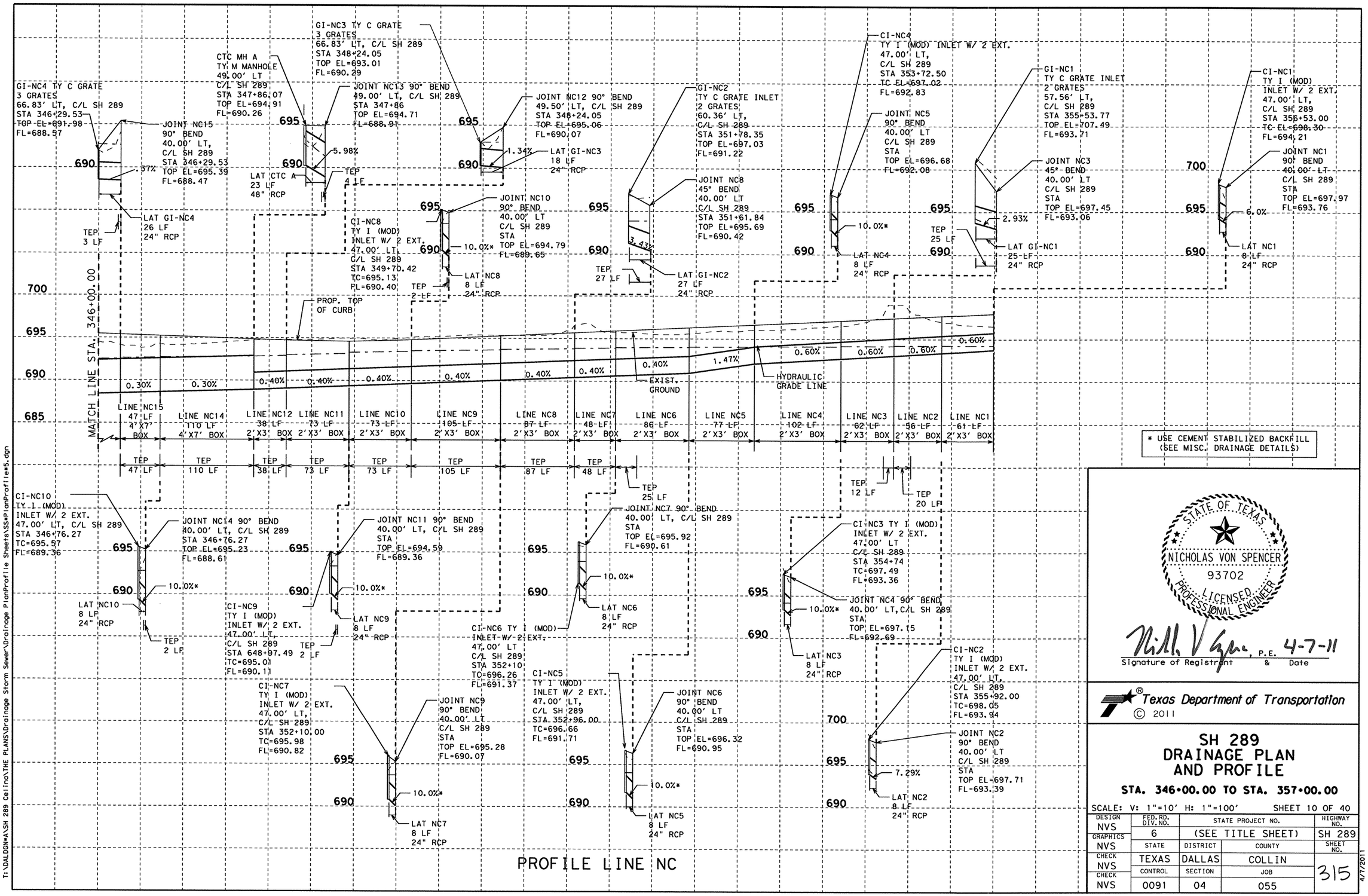

STATE OF TEXAS
NICHOLAS VON SPENCER
93702
LICENSED
PROFESSIONAL ENGINEER

Nicholas Von Spencer, P.E. 4-7-11
Signature of Registrant & Date

Texas Department of Transportation
© 2011

SH 289 DRAINAGE PLAN AND PROFILE

STA. 346+00.00 TO STA. 357+00.00

SCALE: V: 1"=10' H: 1"=100' SHEET 10 OF 40

DESIGN	FED. RD. DIV. NO.	STATE PROJECT NO.		HIGHWAY NO.
NVS	6	(SEE TITLE SHEET)		SH 289
GRAPHICS NVS	STATE	DISTRICT	COUNTY	SHEET NO.
CHECK NVS	TEXAS	DALLAS	COLLIN	315
CHECK NVS	CONTROL	SECTION	JOB	
	0091	04	055	

T:\DALDGN#A\SH 289 Collin\THE PLANS\Drainage Storm Sewer\Drainage PlanProfile Sheets\SS#PlanProfile#5.dgn

4/7/2011

R-201104-01

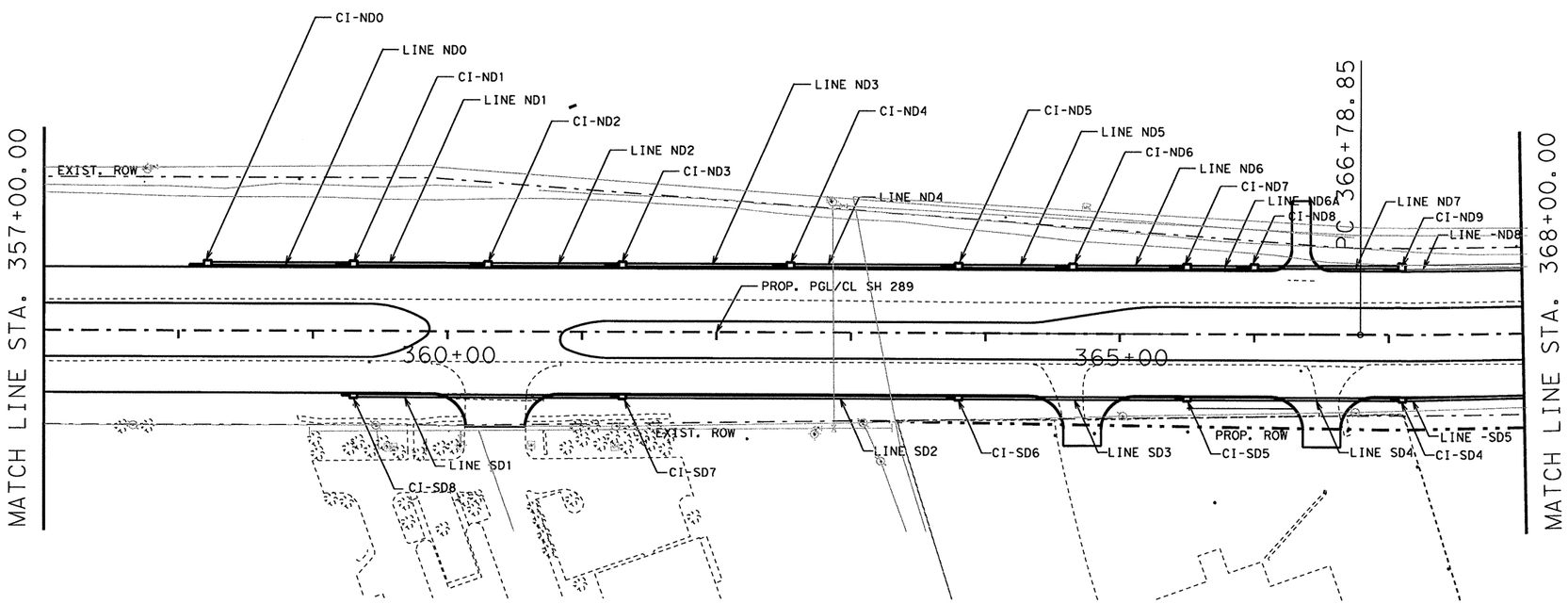

PLAN

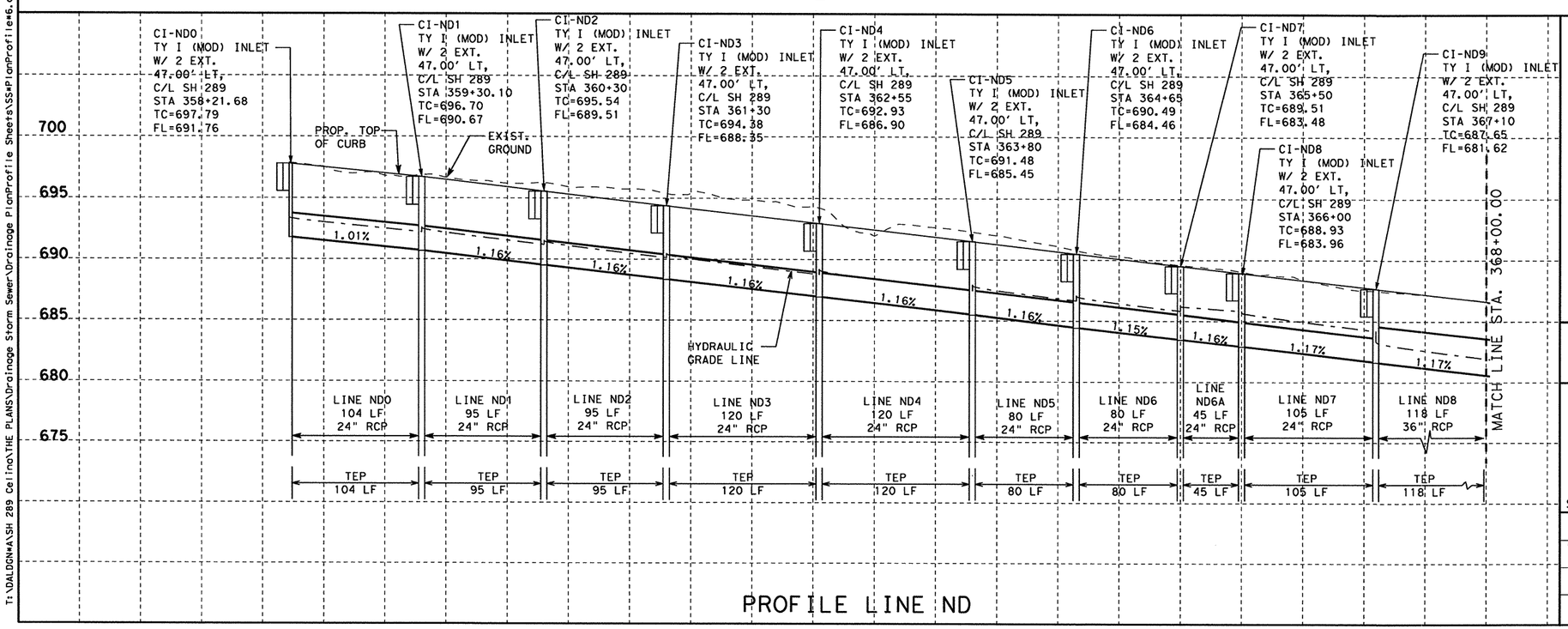

PROFILE LINE ND

STATE OF TEXAS
NICHOLAS VON SPENCER
93702
LICENSED PROFESSIONAL ENGINEER

Signature of Registrant & Date, P.E. 6-2-11

Texas Department of Transportation
© 2011

SH 289 DRAINAGE PLAN AND PROFILE

STA. 357+00.00 TO STA. 368+00.00

SCALE: V: 1"=10' H: 1"=100' SHEET 11 OF 40

DESIGN	FED. RD. DIV. NO.	STATE PROJECT NO.		HIGHWAY NO.
NVS	6	(SEE TITLE SHEET)		SH 289
GRAPHICS	STATE	DISTRICT	COUNTY	SHEET NO.
NVS	TEXAS	DALLAS	COLLIN	316
CHECK	CONTROL	SECTION	JOB	
NVS	0091	04	055	

T:\DALDGN4\SH 289 Celina\THE PLANS\Drainage Storm Sewer\Drainage PlanProfile Sheets\SS#PlanProfile#6.dgn

6/2/2011

R-201104-01

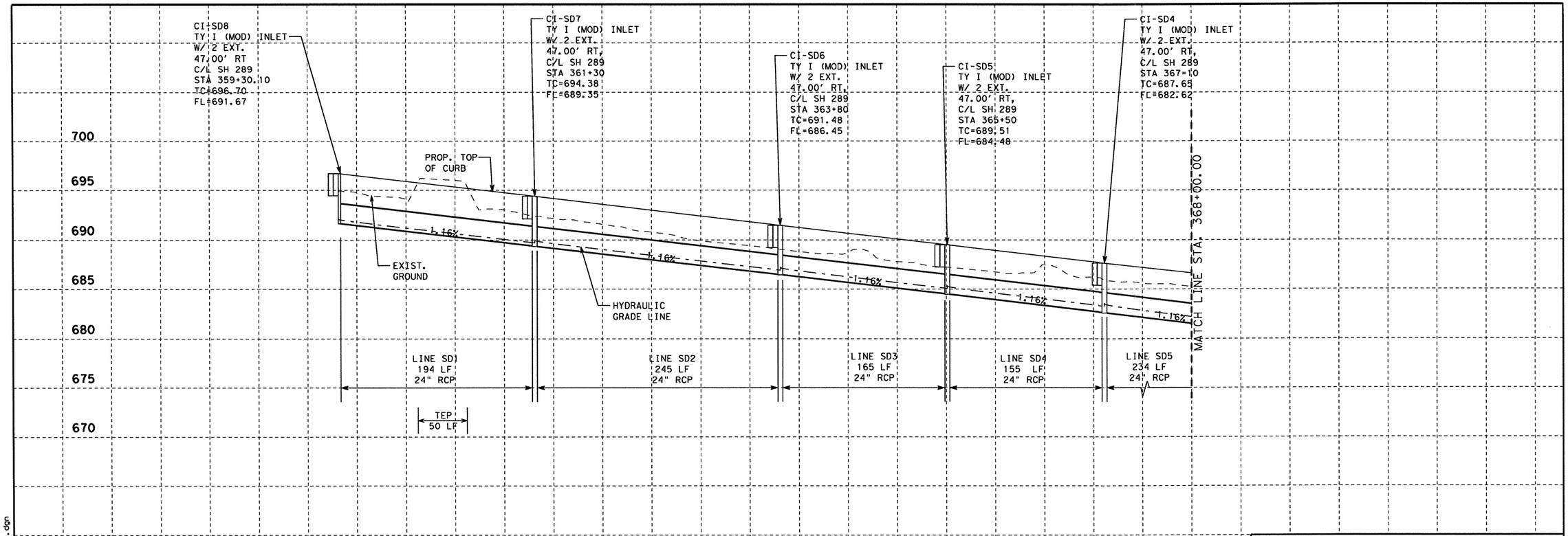

PROFILE LINE SD

STATE OF TEXAS
NICHOLAS VON SPENCER
93702
LICENSED
PROFESSIONAL ENGINEER

Nicholas V Spencer, P.E. 4-7-11
Signature of Registrant & Date

Texas Department of Transportation
© 2011

SH 289
DRAINAGE PLAN AND PROFILE

STA. 357+00.00 TO STA. 368+00.00

SCALE: V: 1"=10' H: 1"=100' SHEET 12 OF 40

DESIGN	FED. RD. DIV. NO.	STATE PROJECT NO.			HIGHWAY NO.
NVS	6	(SEE TITLE SHEET)			SH 289
GRAPHICS NVS	STATE	DISTRICT	COUNTY		SHEET NO.
CHECK NVS	TEXAS	DALLAS	COLLIN		317
CHECK NVS	CONTROL	SECTION	JOB		
	0091	04	055		

T:\DALDGN#A\SH 289 Celina\THE PLANS\Drainage Storm Sewer\Drainage PlanProfile Sheets\SS#PlanProfile#6.dgn

4/7/2011

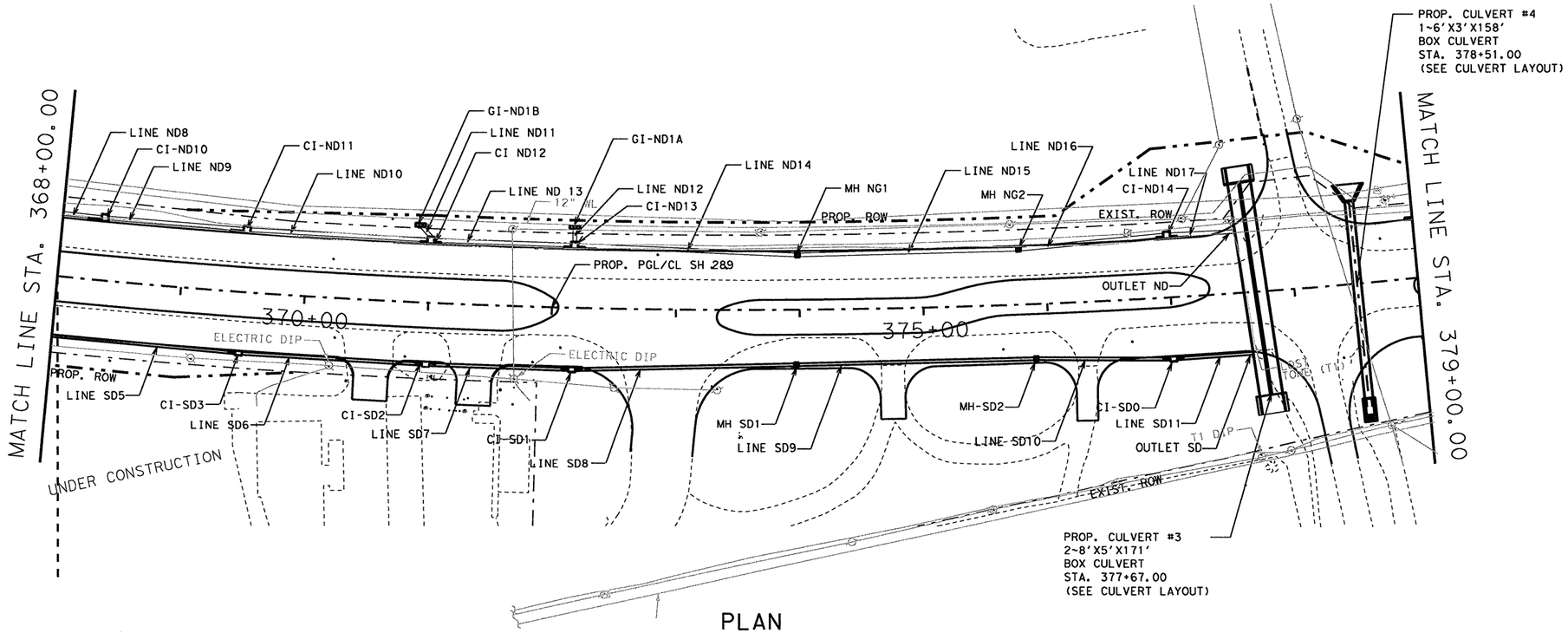

PLAN

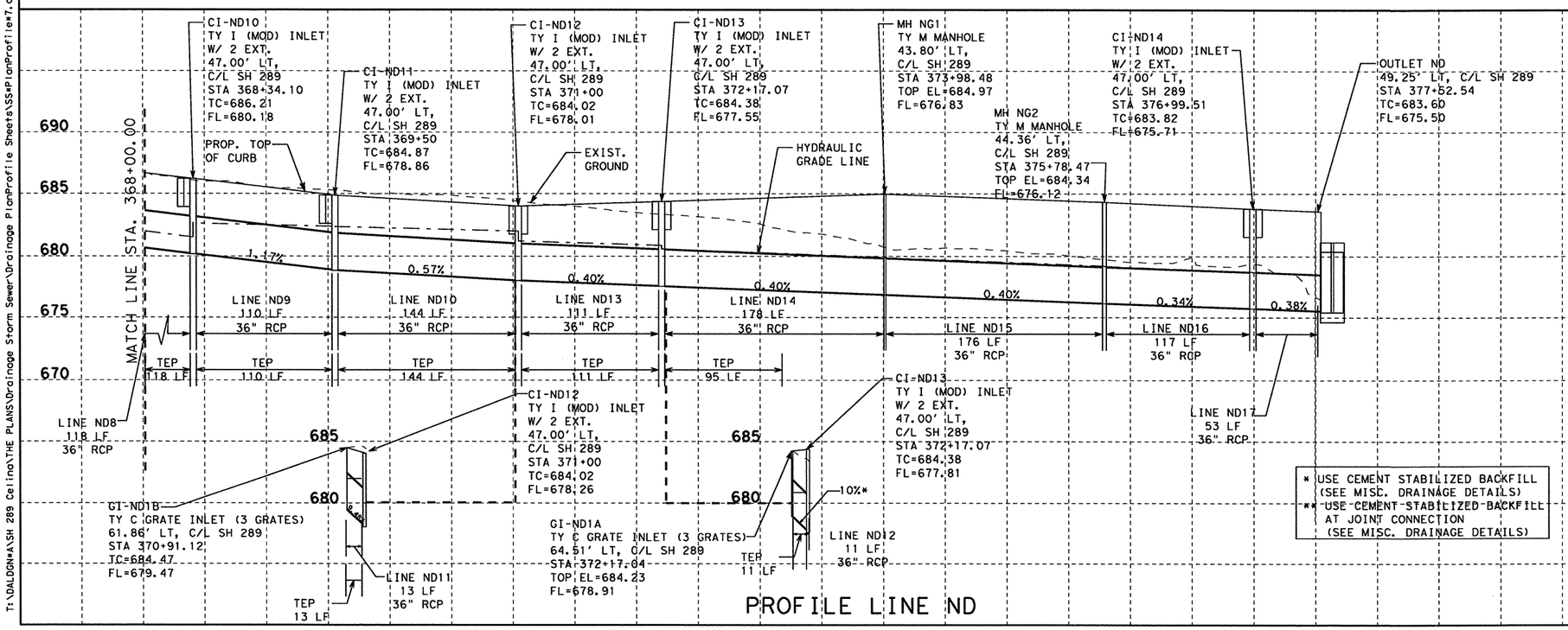

PROFILE LINE ND

STATE OF TEXAS
NICHOLAS VON SPENCER
93702
LICENSED
PROFESSIONAL ENGINEER

Signature of Registrant & Date, P.E. 6-2-11

Texas Department of Transportation
© 2011

SH 289 DRAINAGE PLAN AND PROFILE

STA. 368+00.00 TO STA. 379+00.00

SCALE: V: 1"=10' H: 1"=100' SHEET 13 OF 40

DESIGN	FED. RD. DIV. NO.	STATE PROJECT NO.		HIGHWAY NO.
NVS	6	(SEE TITLE SHEET)		SH 289
GRAPHICS	STATE	DISTRICT	COUNTY	SHEET NO.
NVS	TEXAS	DALLAS	COLLIN	318
CHECK	CONTROL	SECTION	JOB	
NVS	0091	04	055	

T:\DALDGN*A\SH 289 Celina\THE PLANS\Drainage Storm Sewer\Drainage PlanProfile Sheets\SS*PlanProfile*7.dgn

6/2/2011

R-201104-01

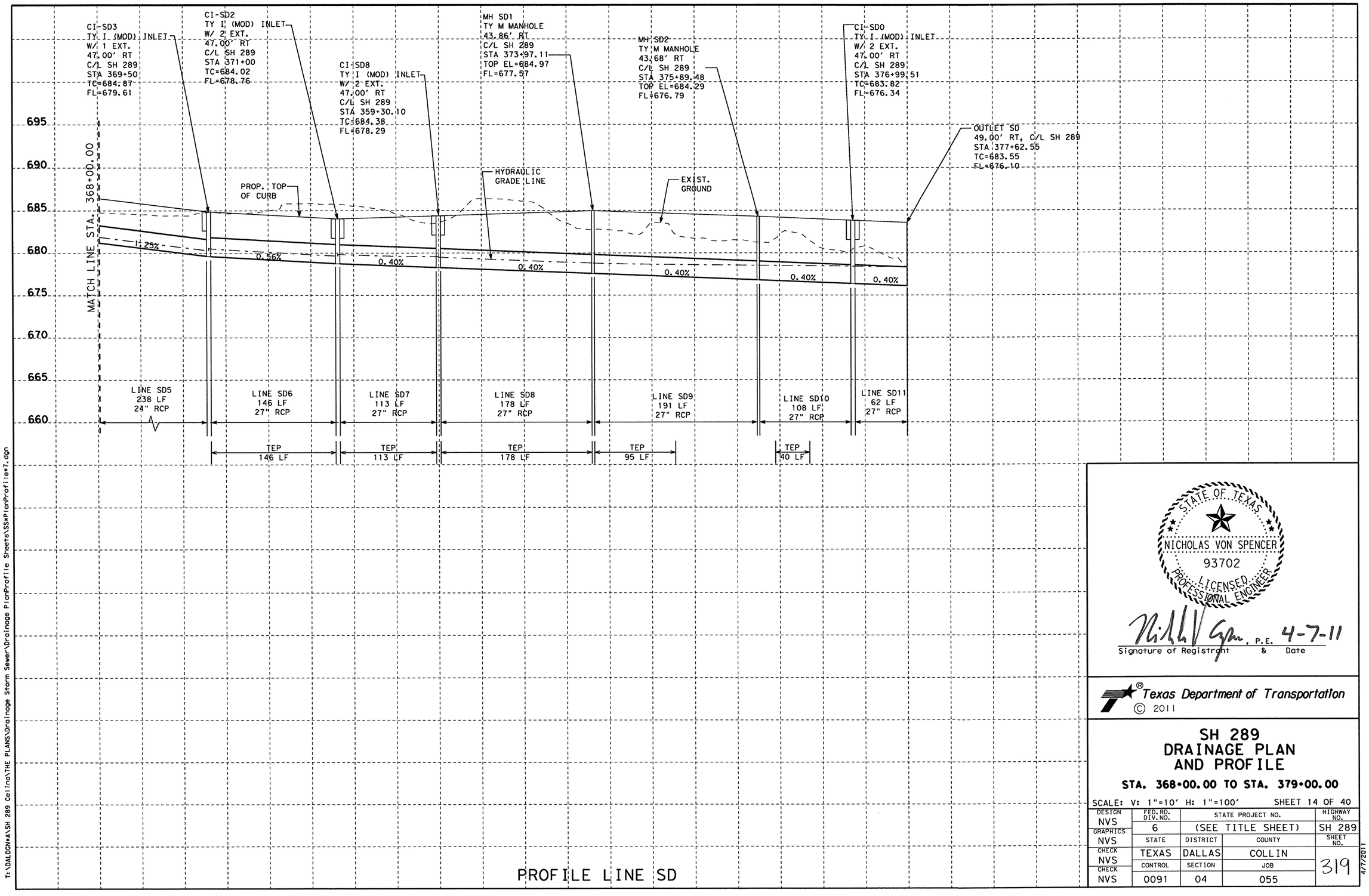

STATE OF TEXAS
NICHOLAS VON SPENCER
93702
LICENSED
PROFESSIONAL ENGINEER

Nicholas Von Spencer, P.E. 4-7-11
Signature of Registrant & Date

Texas Department of Transportation
© 2011

SH 289 DRAINAGE PLAN AND PROFILE

STA. 368+00.00 TO STA. 379+00.00

SCALE: V: 1"=10' H: 1"=100' SHEET 14 OF 40

DESIGN	FED. RD. DIV. NO.	STATE PROJECT NO.		HIGHWAY NO.
NVS	6	(SEE TITLE SHEET)		SH 289
GRAPHICS NVS	STATE	DISTRICT	COUNTY	SHEET NO.
CHECK NVS	TEXAS	DALLAS	COLLIN	319
CHECK NVS	CONTROL 0091	SECTION 04	JOB 055	

T:\DALDGN\A\SH 289 Celina\THE PLANS\Drainage Storm Sewer\Drainage PlanProfile Sheets\SS\PlanProfile\7.dgn

4/7/2011

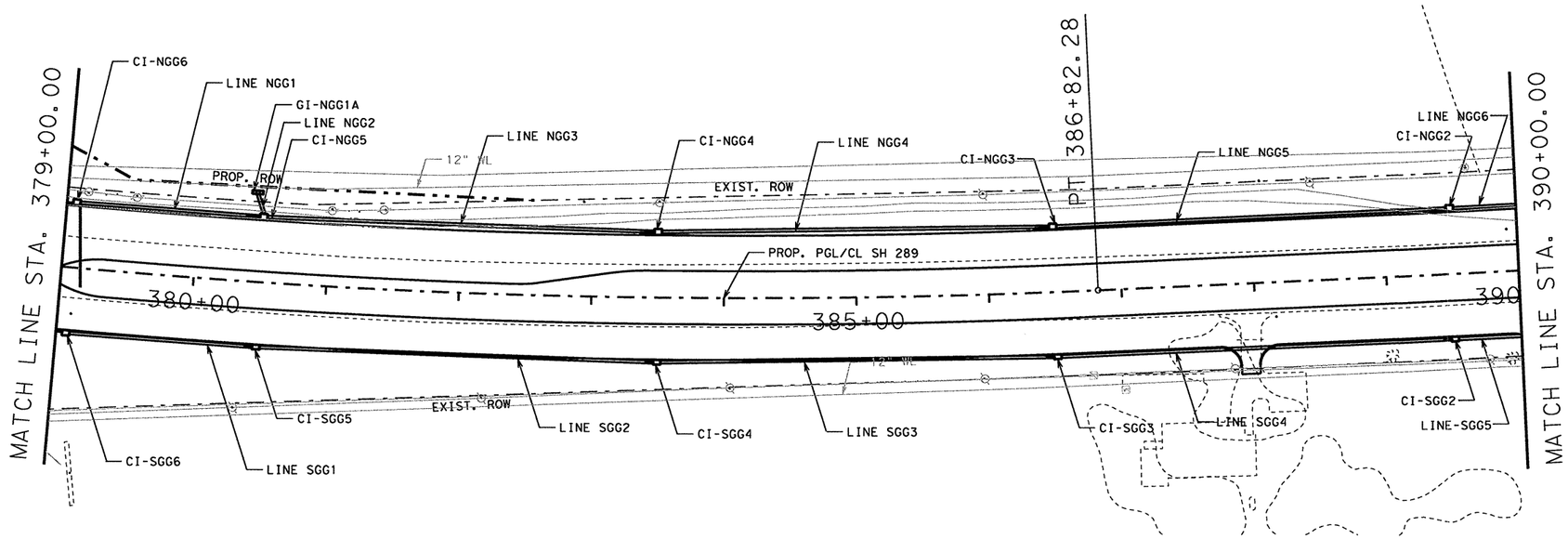

PLAN

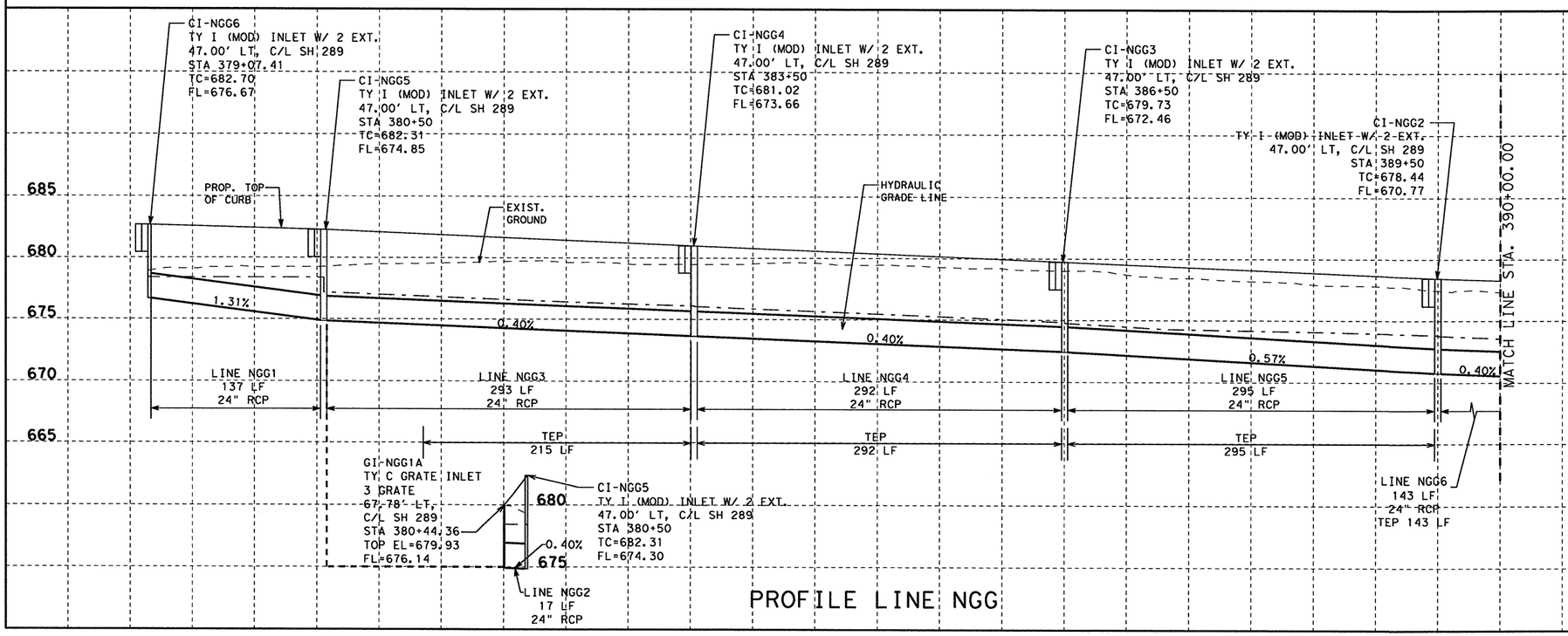

PROFILE LINE NGG

STATE OF TEXAS
NICHOLAS VON SPENCER
93702
LICENSED
PROFESSIONAL ENGINEER

Signature of Registrant, P.E. & Date 6-2-11

Texas Department of Transportation
© 2011

SH 289 DRAINAGE PLAN AND PROFILE

STA. 379+00.00 TO STA. 390+00.00

SCALE: V: 1"=10' H: 1"=100' SHEET 15 OF 40

DESIGN	FED. RD. DIV. NO.	STATE PROJECT NO.		HIGHWAY NO.
NVS	6	(SEE TITLE SHEET)		SH 289
GRAPHICS	STATE	DISTRICT	COUNTY	SHEET NO.
NVS	TEXAS	DALLAS	COLLIN	320
CHECK	CONTROL	SECTION	JOB	
NVS	0091	04	055	

T:\DALDGN*A\SH 289 Celina\THE PLANS\Drainage Storm Sewer\Drainage PlanProfile Sheets\SS*PlanProfile*8.dgn

6/2/2011

R-201104-01

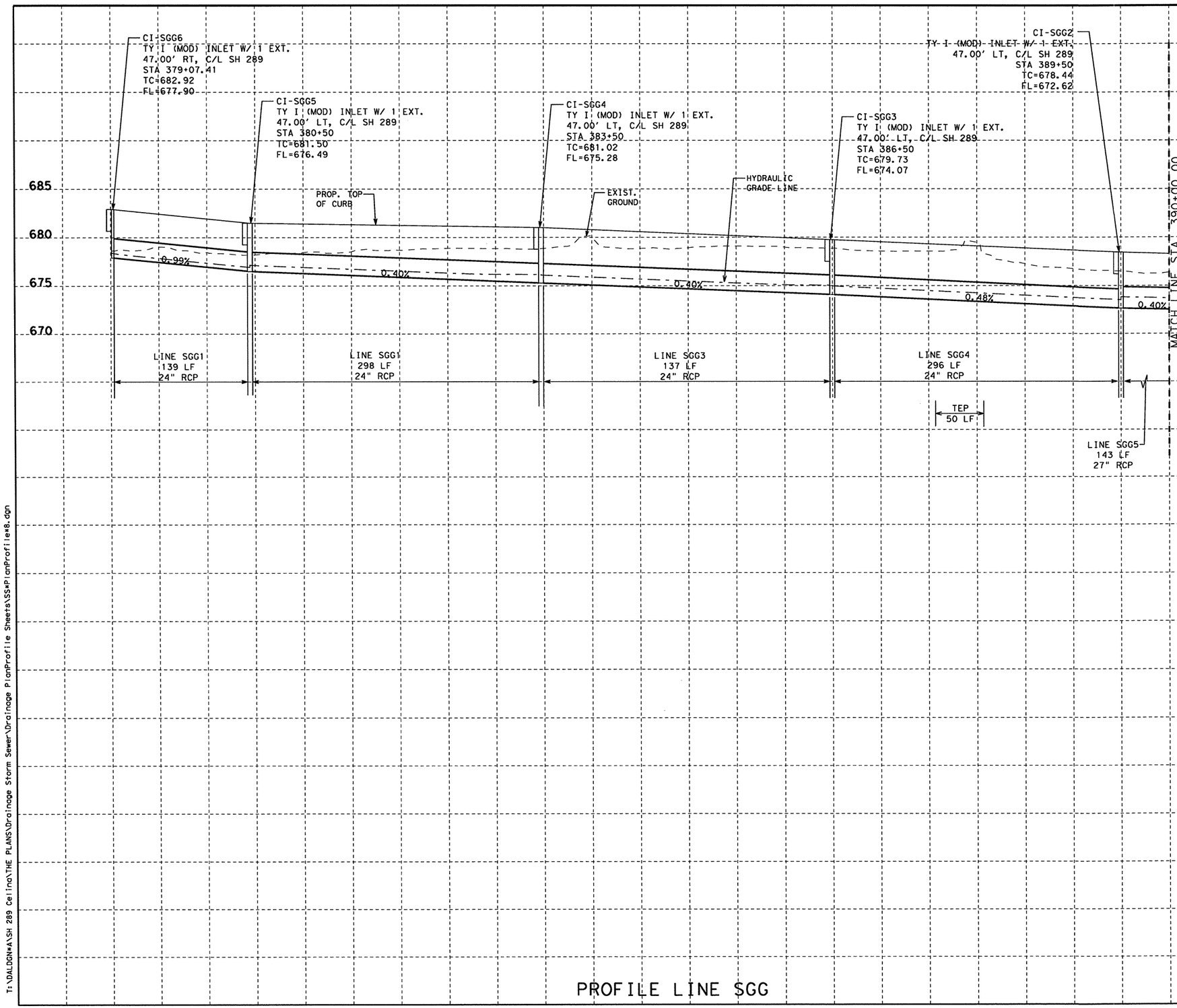

PROFILE LINE SGG

STATE OF TEXAS
NICHOLAS VON SPENCER
93702
LICENSED PROFESSIONAL ENGINEER

Nicholas V Spencer, P.E. 4-7-11
Signature of Registrant & Date

Texas Department of Transportation
© 2011

SH 289 DRAINAGE PLAN AND PROFILE

STA. 379+00.00 TO STA. 390+00.00

SCALE: V: 1"=10' H: 1"=100' SHEET 16 OF 40

DESIGN	FED. RD. DIV. NO.	STATE PROJECT NO.		HIGHWAY NO.
NVS	6	(SEE TITLE SHEET)		SH 289
GRAPHICS NVS	STATE	DISTRICT	COUNTY	SHEET NO.
CHECK NVS	TEXAS	DALLAS	COLLIN	321
CHECK NVS	CONTROL	SECTION	JOB	
	0091	04	055	

4/7/2011

T:\DALDGN\A\SH 289 Celina\THE PLANS\Drainage Storm Sewer\Drainage PlanProfile Sheets\SS&PlanProfile#8.dgn

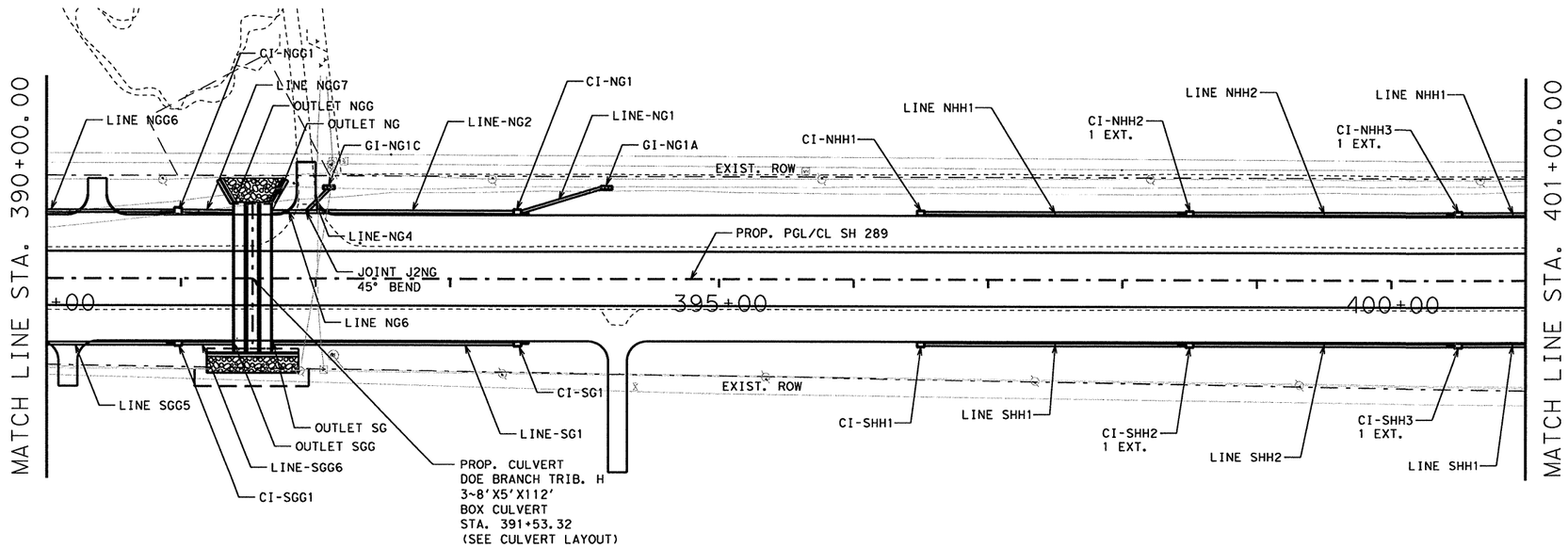

PLAN

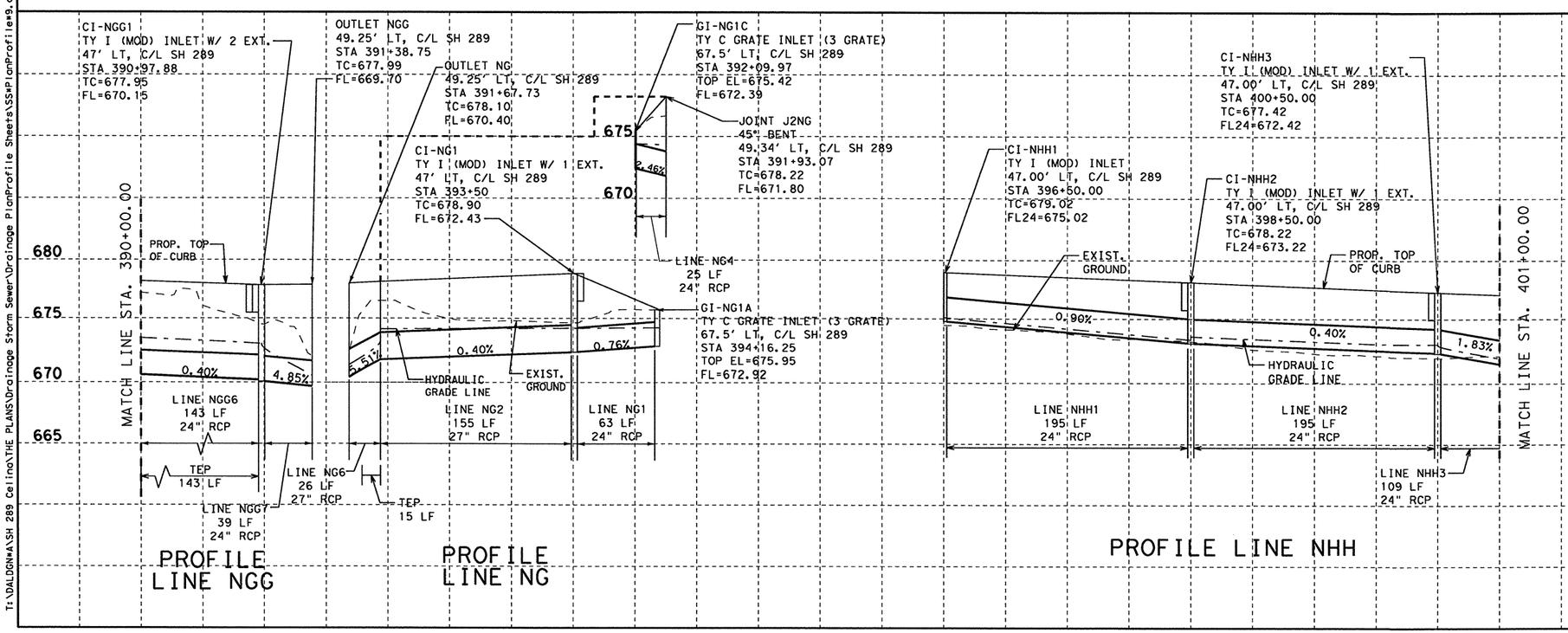

STATE OF TEXAS
NICHOLAS VON SPENCER
93702
LICENSED PROFESSIONAL ENGINEER

Signature of Registrant & Date, P.E. 6-2-11

Texas Department of Transportation
© 2011

SH 289 DRAINAGE PLAN AND PROFILE

STA. 390+00.00 TO STA. 401+00.00

SCALE: V: 1"=10' H: 1"=100' SHEET 17 OF 40

DESIGN	FED. RD. DIV. NO.	STATE PROJECT NO.		HIGHWAY NO.
AMW	6	(SEE TITLE SHEET)		SH 289
GRAPHICS NVS	STATE	DISTRICT	COUNTY	SHEET NO.
CHECK NVS	TEXAS	DALLAS	COLLIN	322
CHECK NVS	CONTROL	SECTION	JOB	
	0091	04	055	

T:\DALDGN*A\SH 289 Celina\THE PLANS\Drainage Storm Sewer\Drainage PlanProfile Sheets\SSPlanProfile*9.dgn

6/2/2011

R-201104-01

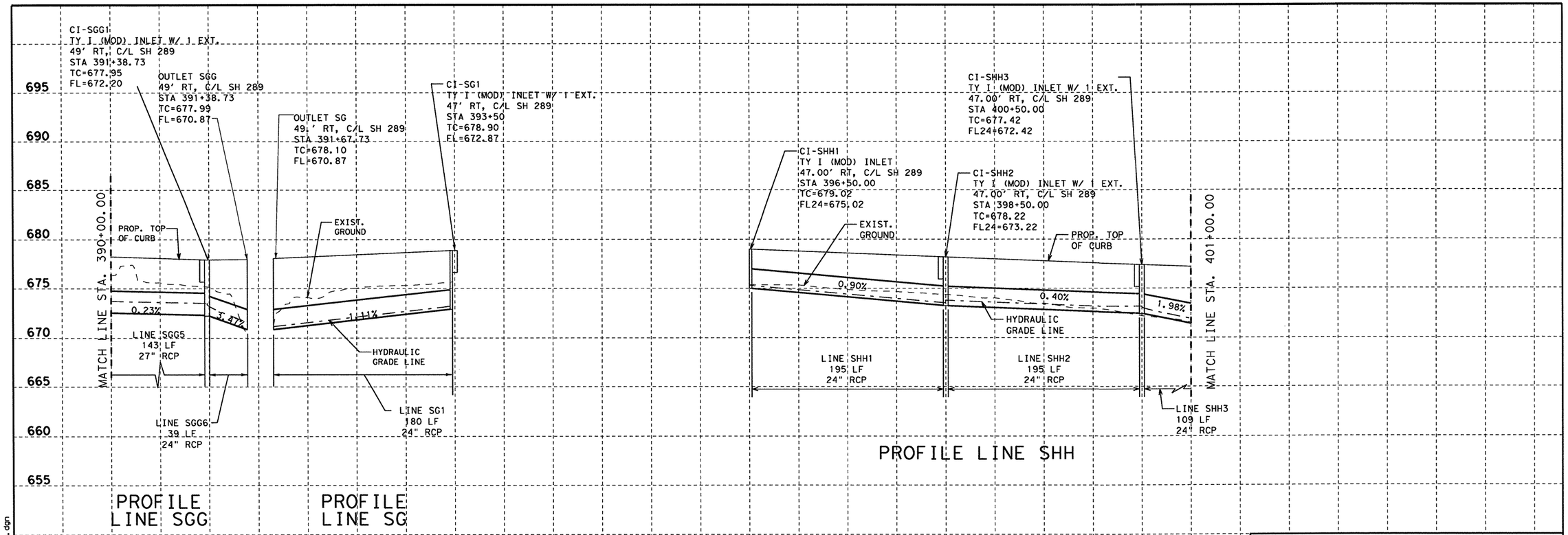

STATE OF TEXAS
NICHOLAS VON SPENCER
93702
LICENSED
PROFESSIONAL ENGINEER

Nicholas Von Spencer, P.E. 4-7-11
Signature of Registrant & Date

Texas Department of Transportation
© 2011

SH 289 DRAINAGE PLAN AND PROFILE

STA. 390+00.00 TO STA. 401+00.00

SCALE: V: 1"=10' H: 1"=100' SHEET 18 OF 40

DESIGN	FED. RD. DIV. NO.	STATE PROJECT NO.		HIGHWAY NO.
AMW	6	(SEE TITLE SHEET)		SH 289
GRAPHICS	STATE	DISTRICT	COUNTY	SHEET NO.
AMW	TEXAS	DALLAS	COLLIN	323
CHECK	CONTROL	SECTION	JOB	
NVS	0091	04	055	
CHECK				
NVS				

T:\DALDGN*A\SH 289 Celina\THE PLANS\Drainage Storm Sewer\Drainage PlanProfile Sheets\SS*PlanProfile*9.dgn

4/7/2011

R-201104-01

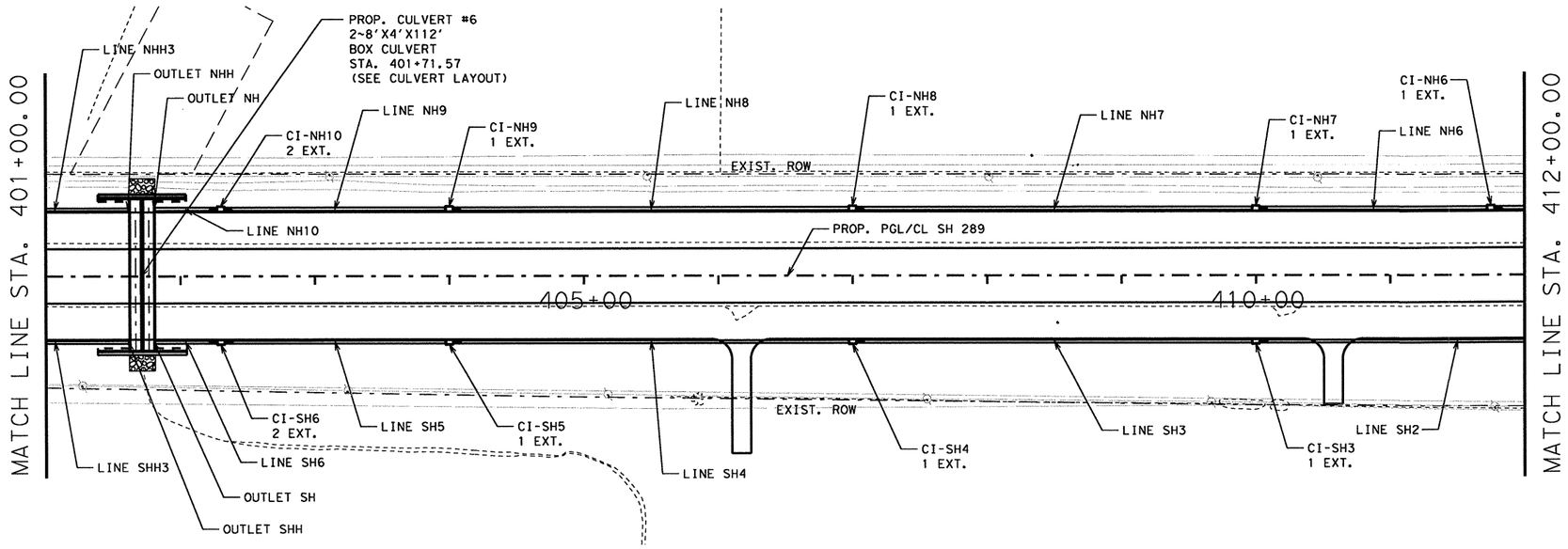

PLAN

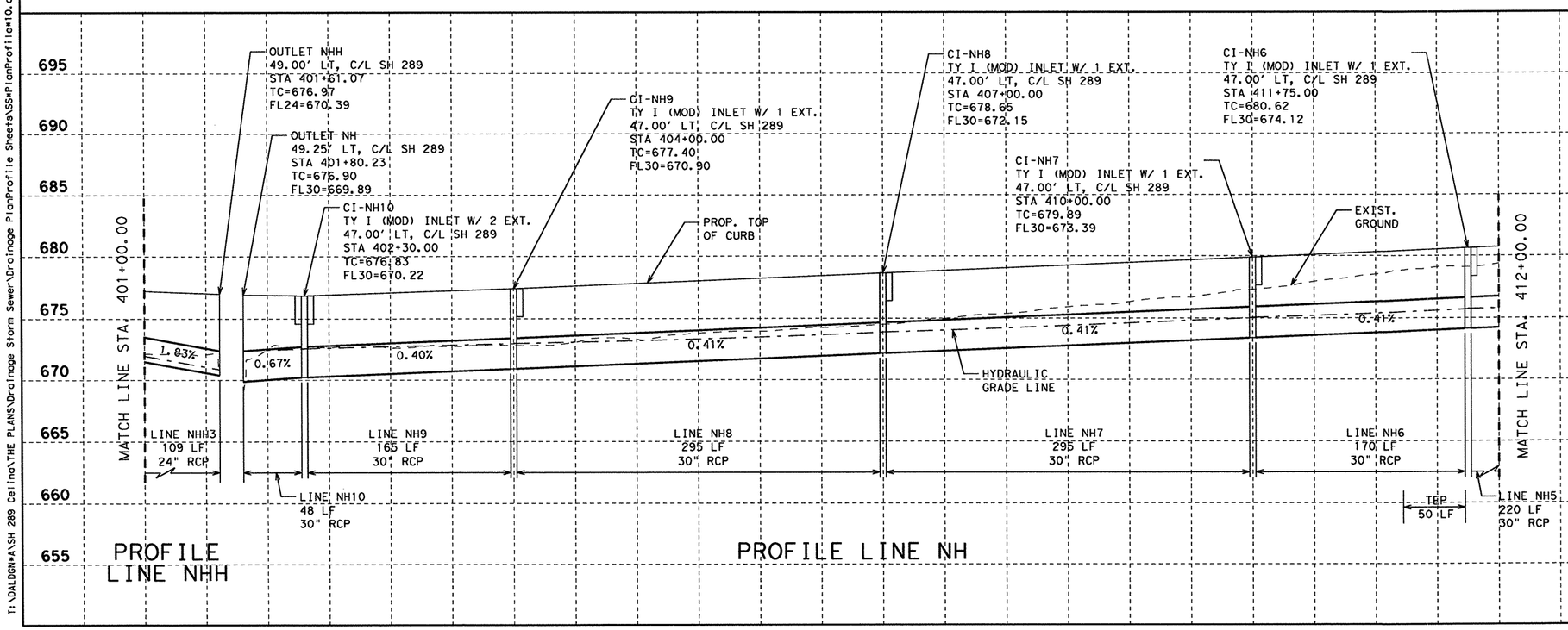

STATE OF TEXAS
NICHOLAS VON SPENCER
93702
LICENSED
PROFESSIONAL ENGINEER

Signature of Registrant & Date, P.E. 4-7-11

Texas Department of Transportation
© 2011

SH 289 DRAINAGE PLAN AND PROFILE

STA. 401+00.00 TO STA. 412+00.00

SCALE: V: 1"=10' H: 1"=100' SHEET 19 OF 40

DESIGN	FED. RD. DIV. NO.	STATE PROJECT NO.		HIGHWAY NO.
AMW	6	(SEE TITLE SHEET)		SH 289
GRAPHICS	STATE	DISTRICT	COUNTY	SHEET NO.
AMW	TEXAS	DALLAS	COLLIN	324
CHECK	CONTROL	SECTION	JOB	
NVS	0091	04	055	
CHECK				
NVS				

T:\DALDGN*A\SH 289 Celina\THE PLANS\Drainage Storm Sewer\Drainage PlanProfile Sheets\SS*PlanProfile*10.dgn

4/7/2011

R-201104-01

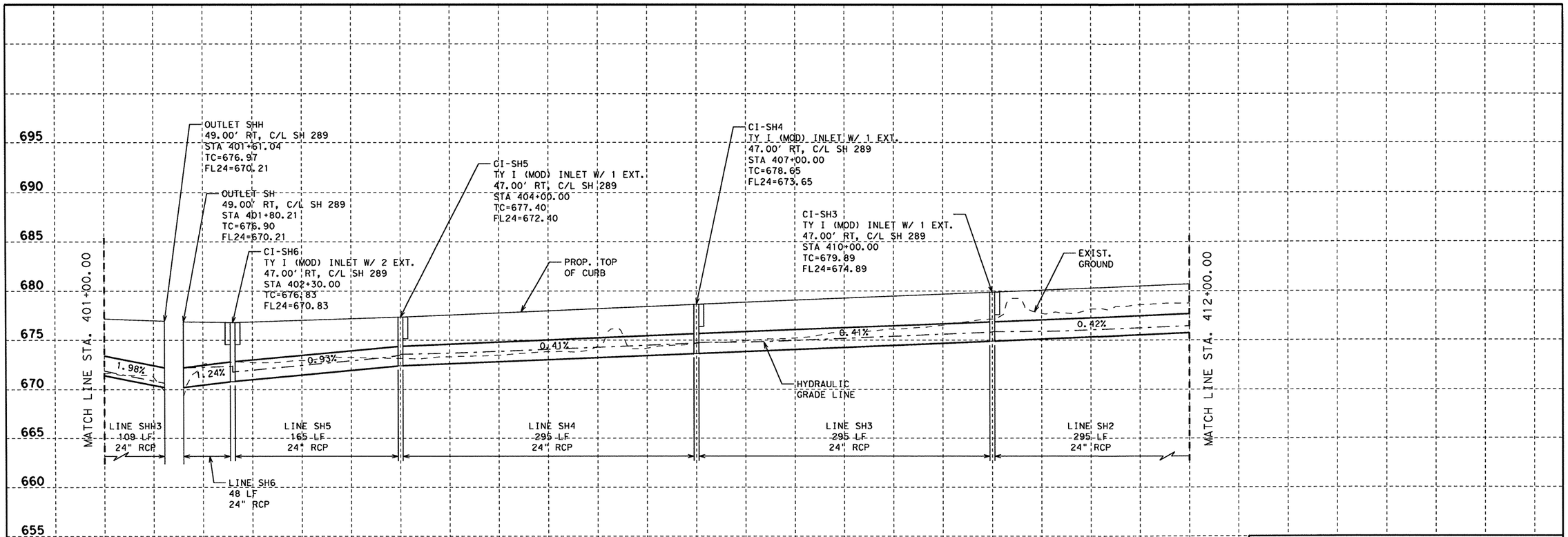

STATE OF TEXAS
NICHOLAS VON SPENCER
93702
LICENSED
PROFESSIONAL ENGINEER

Nicholas V. Spencer, P.E. 4-7-11
Signature of Registrant & Date

Texas Department of Transportation
© 2011

SH 289
DRAINAGE PLAN AND PROFILE

STA. 401+00.00 TO STA. 412+00.00

SCALE: V: 1"=10' H: 1"=100' SHEET 20 OF 40

DESIGN	FED. RD. DIV. NO.	STATE PROJECT NO.		HIGHWAY NO.
AMW	6	(SEE TITLE SHEET)		SH 289
GRAPHICS	STATE	DISTRICT	COUNTY	SHEET NO.
AMW	TEXAS	DALLAS	COLLIN	325
CHECK	CONTROL	SECTION	JOB	
NVS	0091	04	055	
CHECK				
NVS				

4/7/2011

T:\DALDGN*A\SH 289 Ceiling\THE PLANS\Drainage Storm Sewer\Drainage PlanProfile Sheets\SS*PlanProfile*10.dgn

R-201104-01

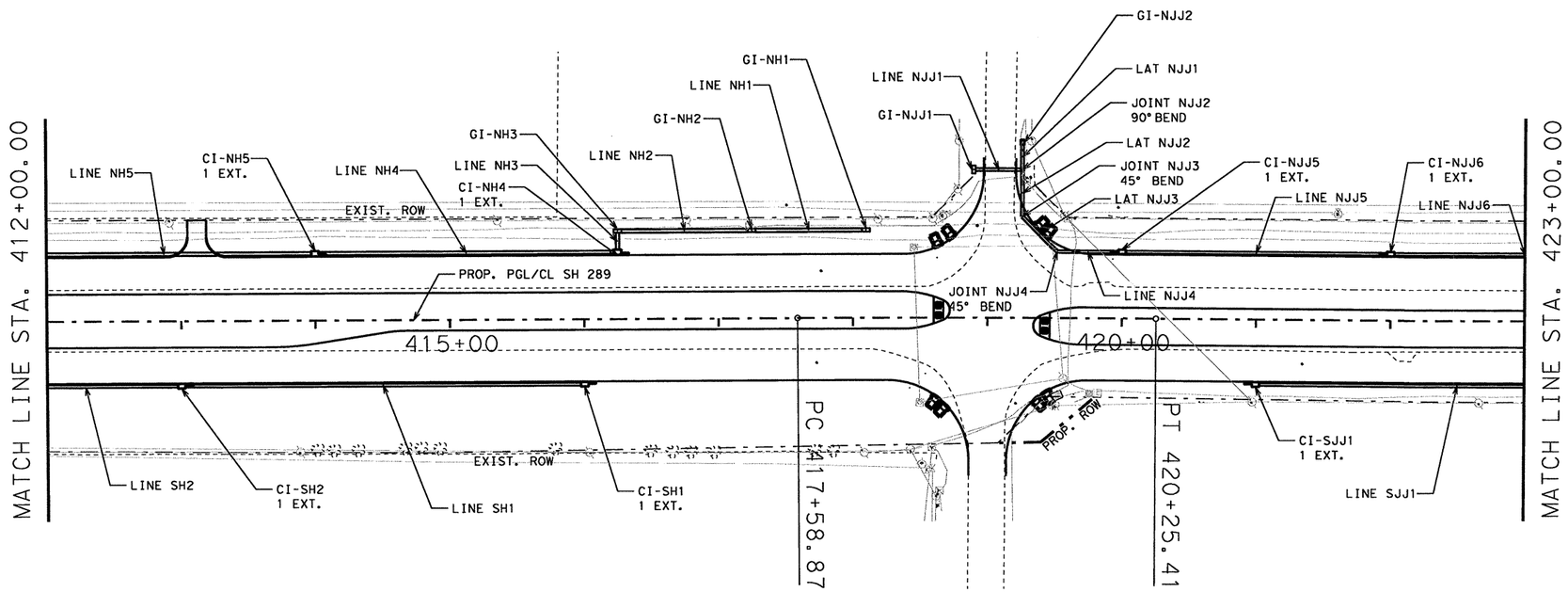

PLAN

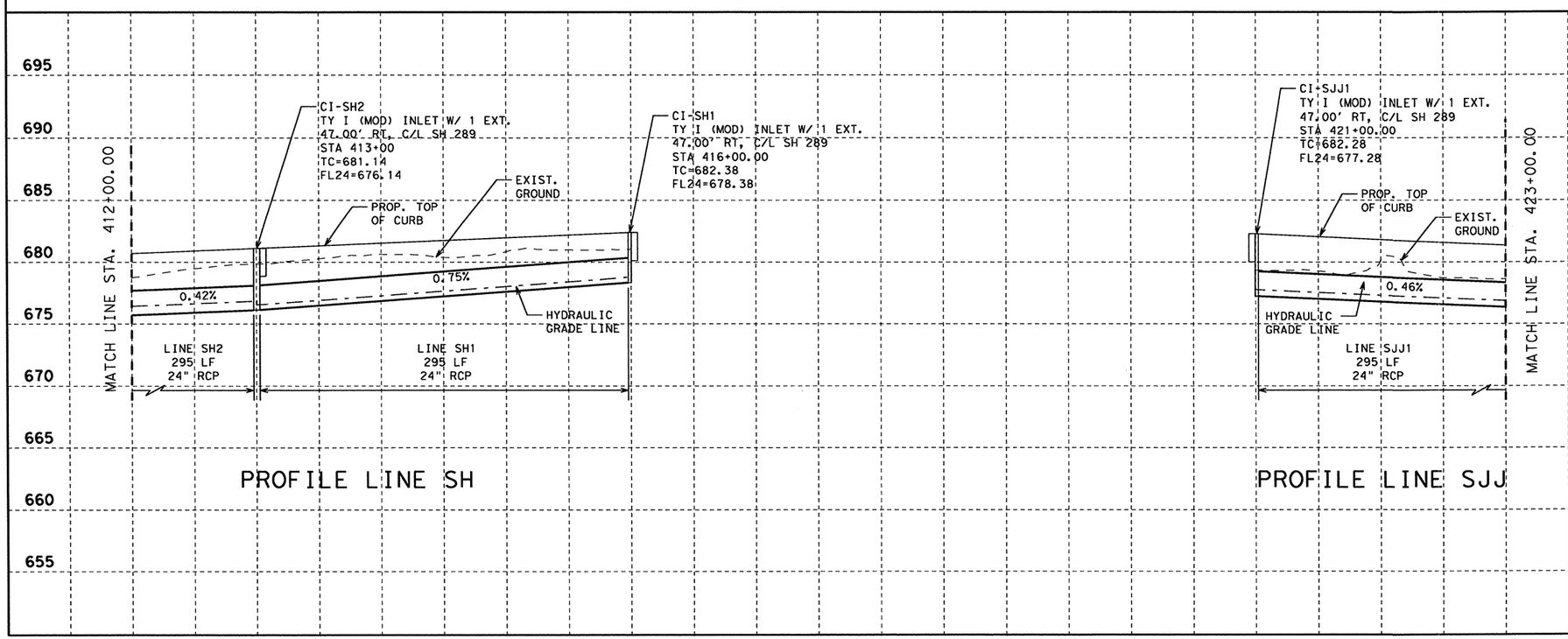

STATE OF TEXAS
NICHOLAS VON SPENCER
93702
LICENSED
PROFESSIONAL ENGINEER

Signature of Registrant , P.E. & Date 4-7-11

Texas Department of Transportation
© 2011

SH 289 DRAINAGE PLAN AND PROFILE

STA. 412+00.00 TO STA. 423+00.00

SCALE: V: 1"=10' H: 1"=100' SHEET 21 OF 40

DESIGN	FED. RD. DIV. NO.	STATE PROJECT NO.		HIGHWAY NO.
AMW	6	(SEE TITLE SHEET)		SH 289
GRAPHICS AMW	STATE	DISTRICT	COUNTY	SHEET NO.
CHECK NVS	TEXAS	DALLAS	COLLIN	326
CHECK NVS	CONTROL 0091	SECTION 04	JOB 055	

4/7/2011

T:\DALDGN*A\SH 289 Celina\THE PLANS\Drainage Storm Sewer\Drainage PlanProfile Sheets\SS*PlanProfile*11.dgn

R-201104-01

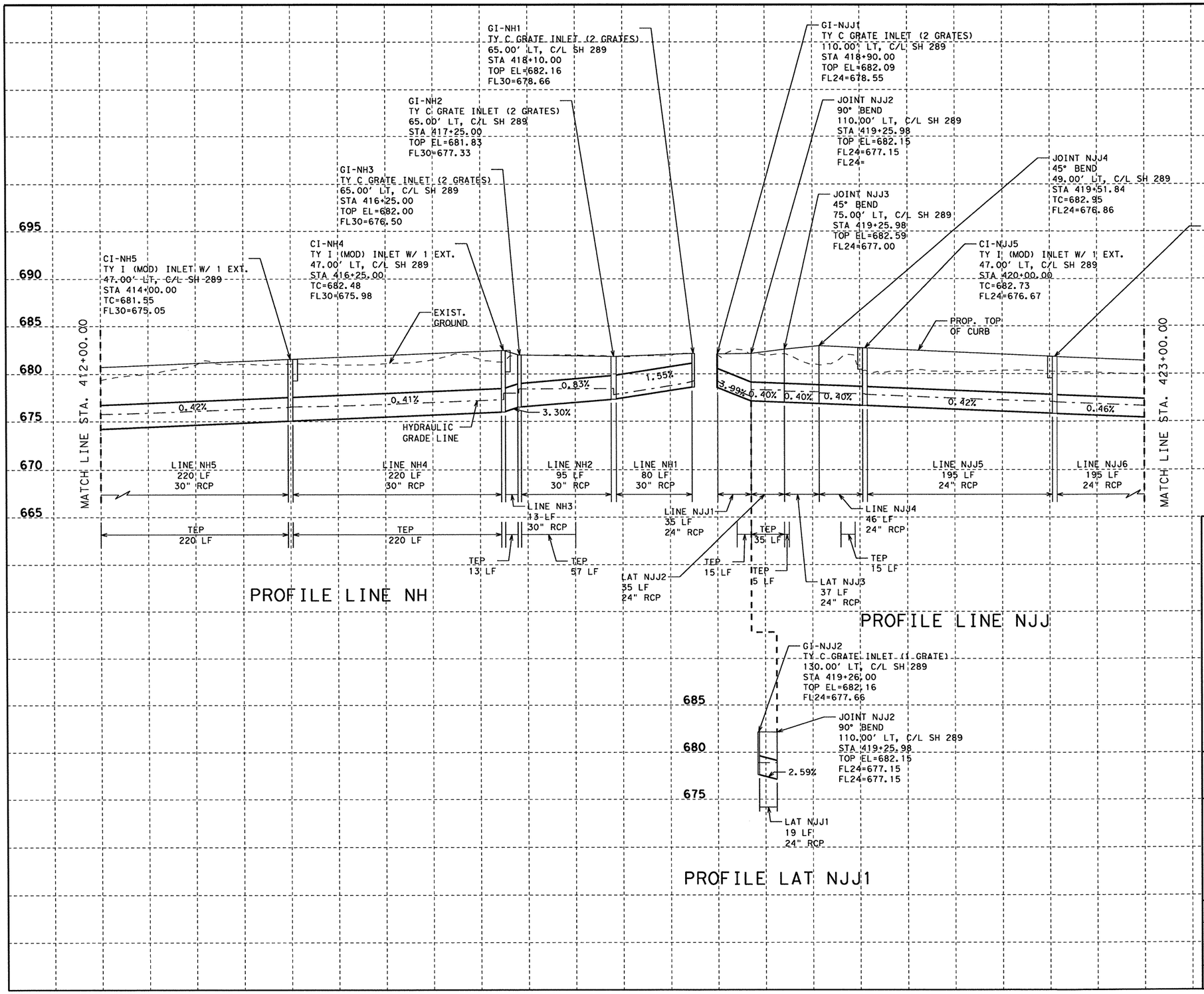

STATE OF TEXAS
NICHOLAS VON SPENCER
93702
LICENSED PROFESSIONAL ENGINEER

Signature of Registrant & Date, P.E. 4-7-11

Texas Department of Transportation
© 2011

SH 289 DRAINAGE PLAN AND PROFILE

STA. 412+00.00 TO STA. 423+00.00

SCALE: V: 1"=10' H: 1"=100' SHEET 22 OF 40

DESIGN	FED. RD. DIV. NO.	STATE PROJECT NO.		HIGHWAY NO.
AMW	6	(SEE TITLE SHEET)		SH 289
GRAPHICS	STATE	DISTRICT	COUNTY	SHEET NO.
AMW	TEXAS	DALLAS	COLLIN	327
CHECK	CONTROL	SECTION	JOB	
NVS	0091	04	055	
CHECK NVS				

4/7/2011

T:\DALDGN\A\SH 289 Celina\THE PLANS\Drainage Storm Sewer\Drainage PlanProfile Sheets\SSwPlanProfile*11.dgn

R-201104-01

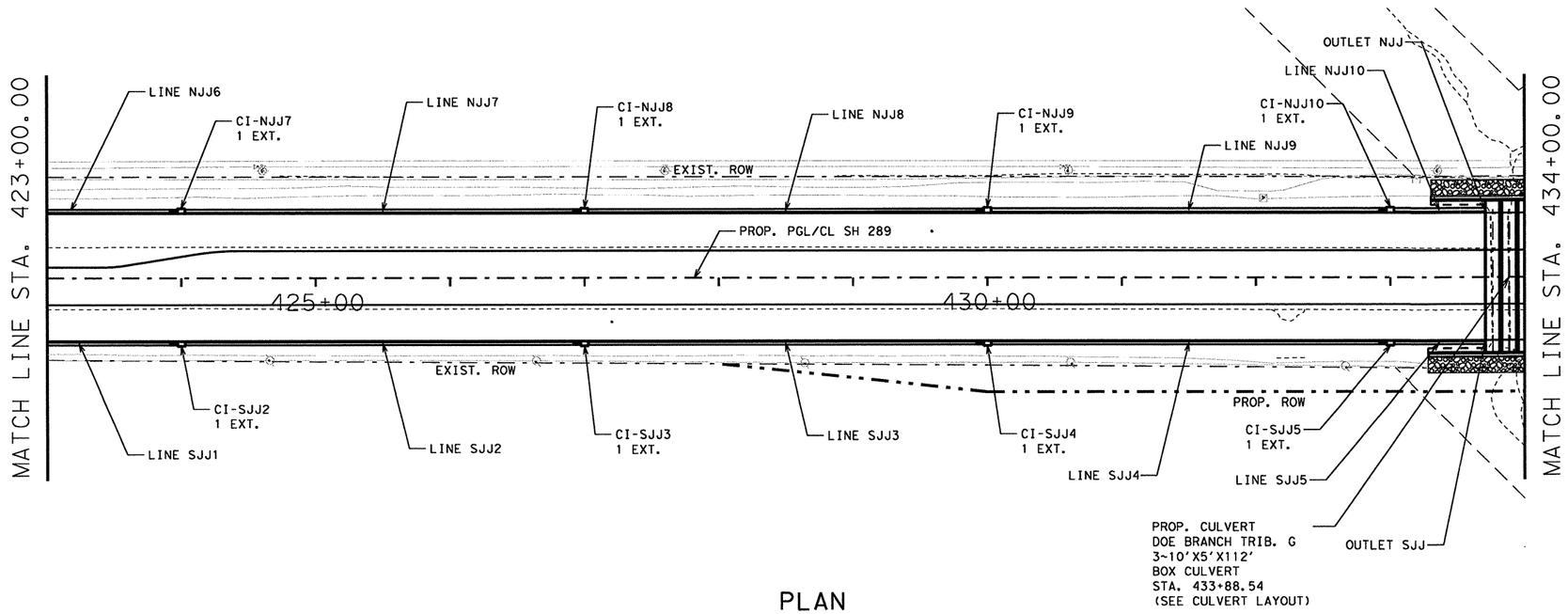

PLAN

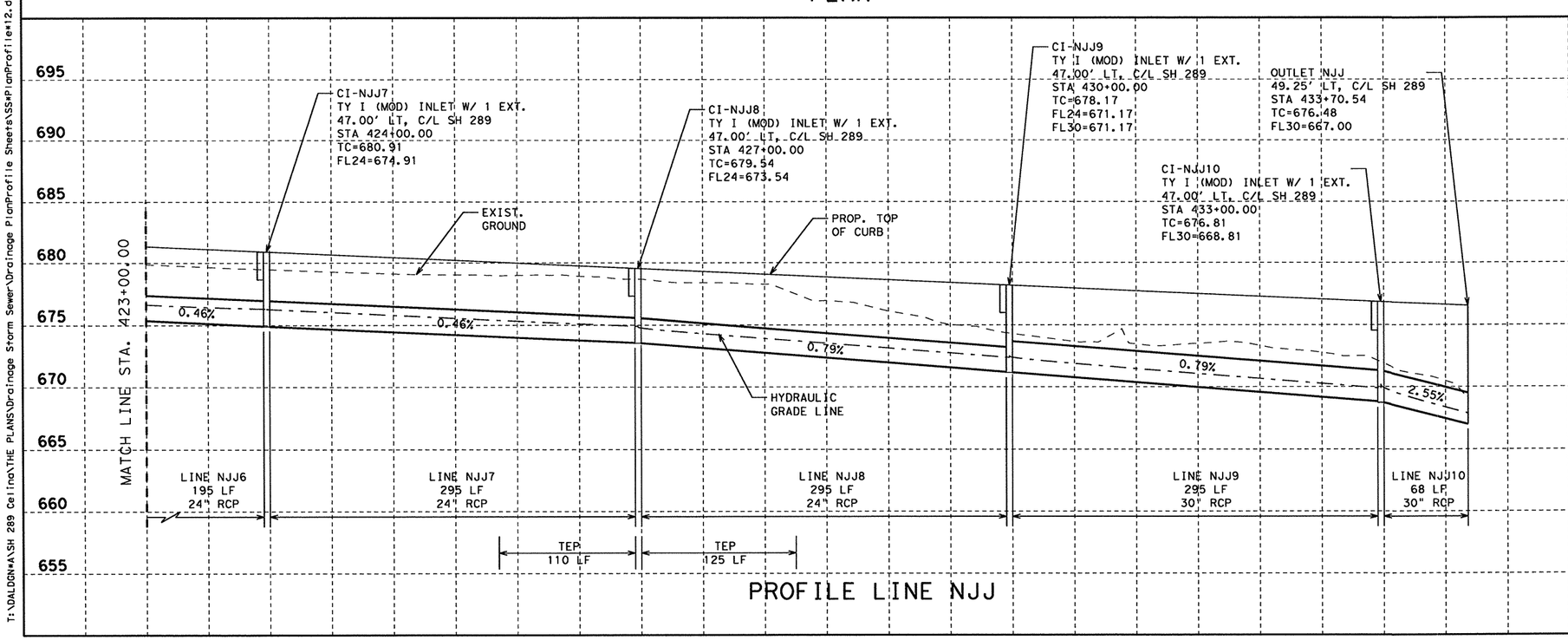

PROFILE LINE NJJ

STATE OF TEXAS
NICHOLAS VON SPENCER
93702
LICENSED PROFESSIONAL ENGINEER

Signature of Registrant & Date, P.E. 4-7-11

Texas Department of Transportation
© 2011

SH 289 DRAINAGE PLAN AND PROFILE

STA. 423+00.00 TO STA. 434+00.00

SCALE: V: 1"=10' H: 1"=100' SHEET 23 OF 40

DESIGN	FED. RD. DIV. NO.	STATE PROJECT NO.		HIGHWAY NO.
AMW	6	(SEE TITLE SHEET)		SH 289
GRAPHICS AMW	STATE	DISTRICT	COUNTY	SHEET NO.
CHECK NVS	TEXAS	DALLAS	COLLIN	328
CHECK NVS	CONTROL	SECTION	JOB	
	0091	04	055	

T:\DALDGN\A\SH 289 Celina\THE PLANS\Drainage Storm Sewer\Drainage PlanProfile Sheets\SS#PlanProfile#12.dgn

4/7/2011

R-201104-01

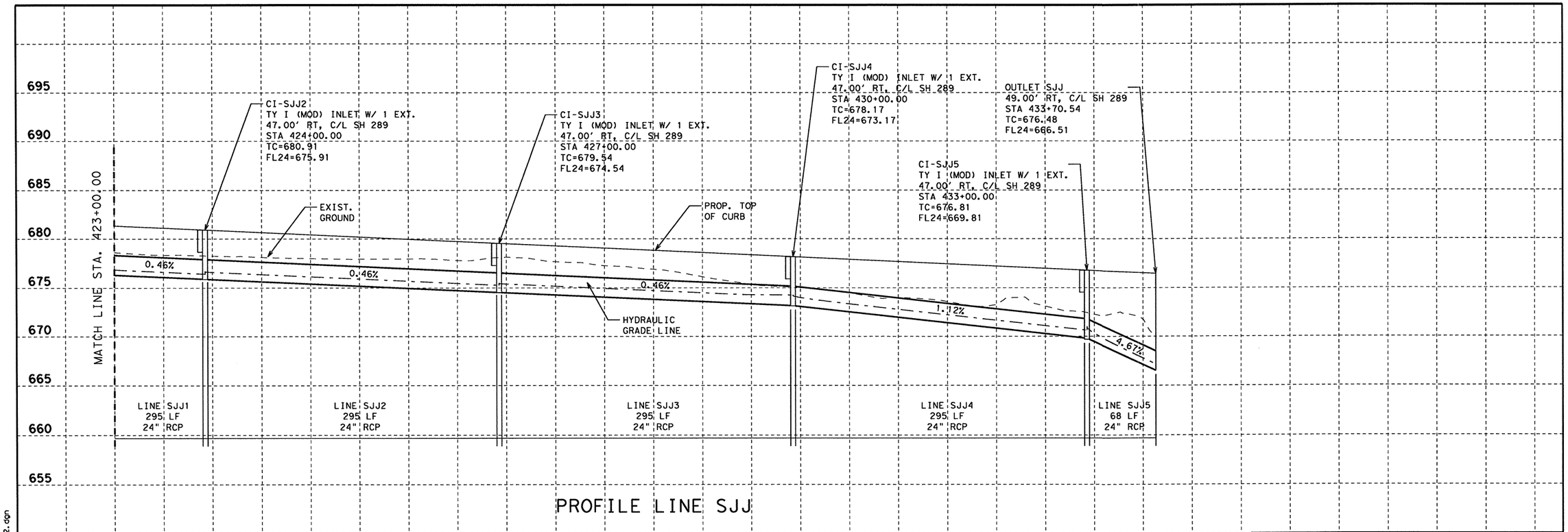

PROFILE LINE SJJ

STATE OF TEXAS
NICHOLAS VON SPENCER
93702
LICENSED
PROFESSIONAL ENGINEER

Nicholas V Spencer, P.E. 4-7-11
Signature of Registrant & Date

Texas Department of Transportation
© 2011

SH 289 DRAINAGE PLAN AND PROFILE

STA. 423+00.00 TO STA. 434+00.00

SCALE: V: 1"=10' H: 1"=100' SHEET 24 OF 40

DESIGN	FED. RD. DIV. NO.	STATE PROJECT NO.		HIGHWAY NO.
AMW	6	(SEE TITLE SHEET)		SH 289
GRAPHICS AMW	STATE	DISTRICT	COUNTY	SHEET NO.
CHECK NVS	TEXAS	DALLAS	COLLIN	329
CHECK NVS	CONTROL 0091	SECTION 04	JOB 055	

4/7/2011

T:\DALDGN*A\SH 289 Celina\THE PLANS\Drainage Storm Sewer\Drainage PlanProfile Sheets\SS*PlanProfile*12.dgn

R-201104-01

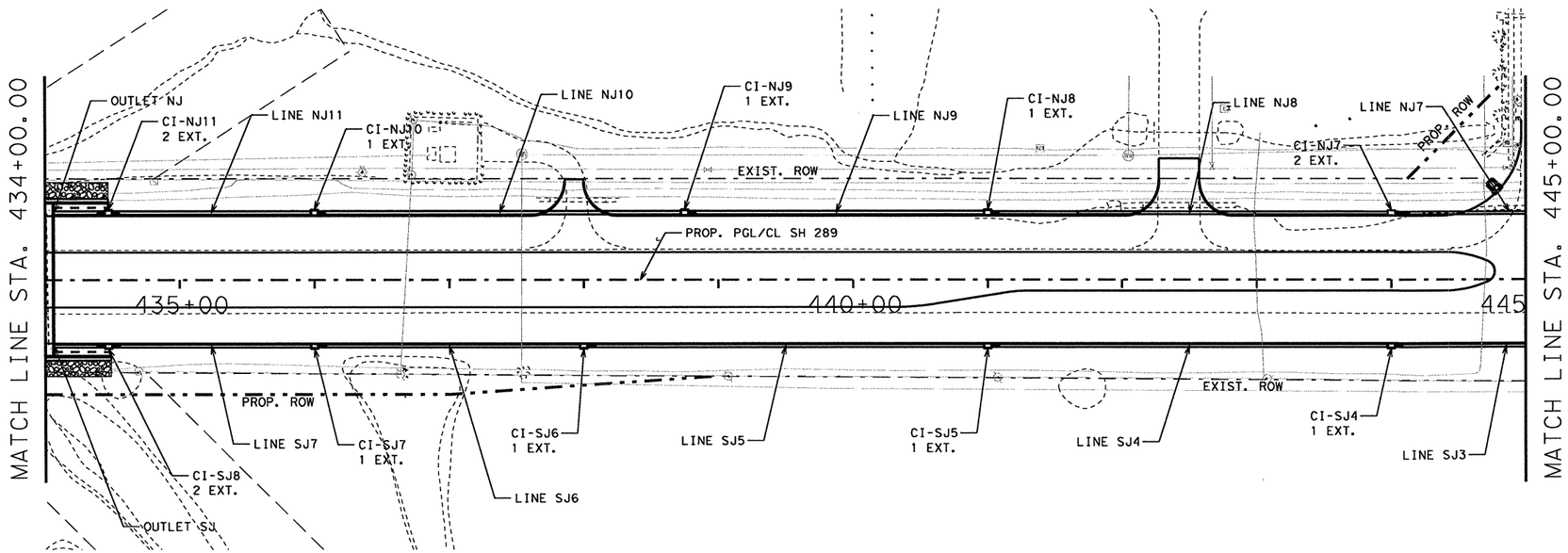

PLAN

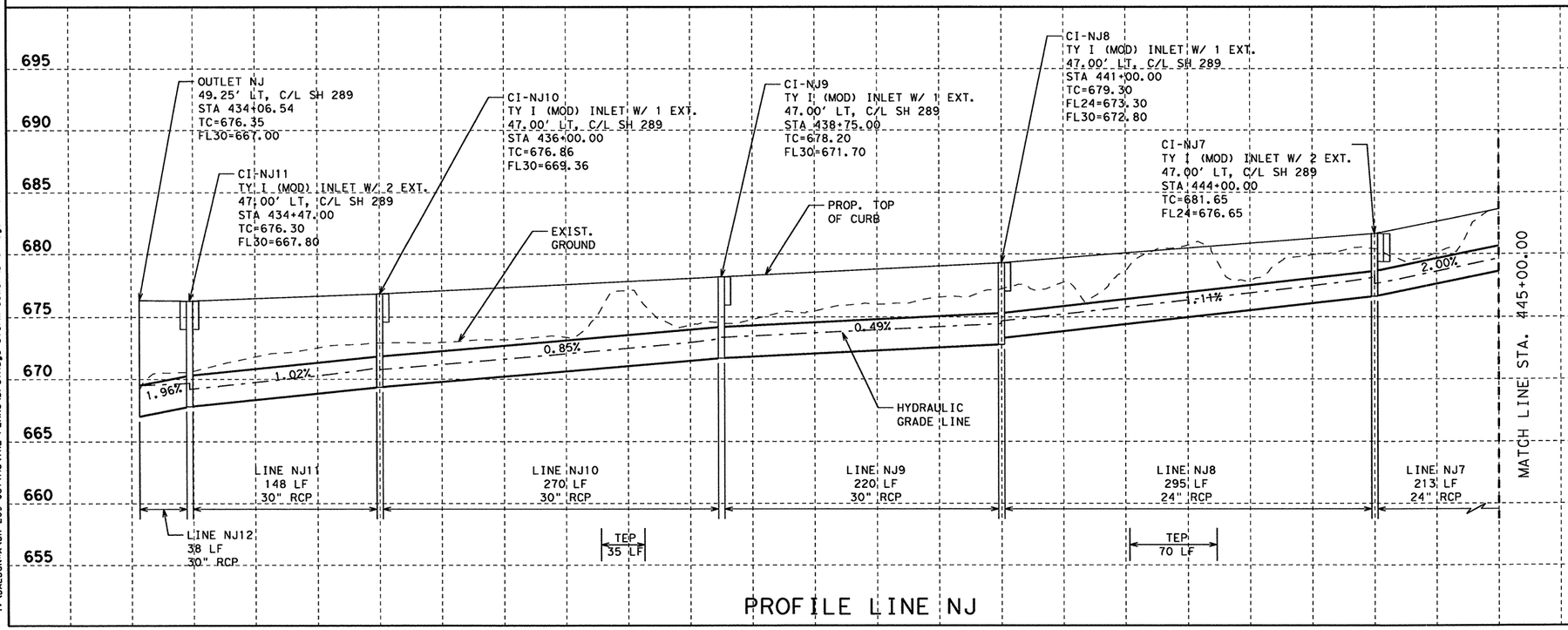

PROFILE LINE NJ

STATE OF TEXAS
NICHOLAS VON SPENCER
93702
LICENSED
PROFESSIONAL ENGINEER

Signature of Registrant & Date, P.E. 4-7-11

Texas Department of Transportation
© 2011

SH 289 DRAINAGE PLAN AND PROFILE

STA. 434+00.00 TO STA. 445+00.00

SCALE: V: 1"=10' H: 1"=100' SHEET 25 OF 40

DESIGN	FED. RD. DIV. NO.	STATE PROJECT NO.		HIGHWAY NO.
AMW	6	(SEE TITLE SHEET)		SH 289
GRAPHICS AMW	STATE	DISTRICT	COUNTY	SHEET NO.
CHECK NVS	TEXAS	DALLAS	COLLIN	330
CHECK NVS	CONTROL	SECTION	JOB	
	0091	04	055	

T:\DALDGN\ASH 289 Ceiling\THE PLANS\Drainage Storm Sewer\Drainage PlanProfile Sheets\SS*PlanProfile*13.dgn

4/7/2011

R-201104-01

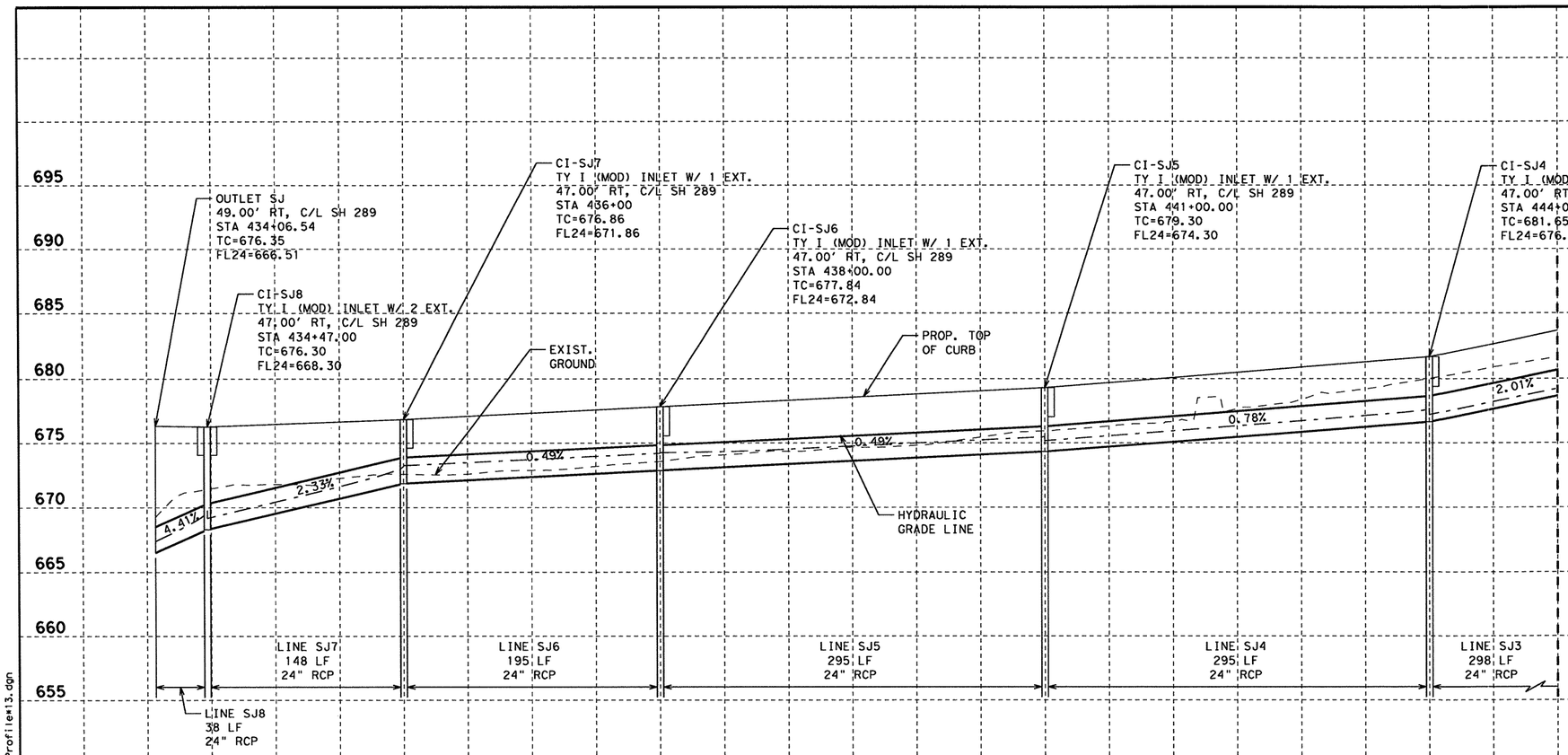

PROFILE LINE SJ

STATE OF TEXAS
NICHOLAS VON SPENCER
93702
LICENSED
PROFESSIONAL ENGINEER

Signature of Registrant & Date, P.E. 4-7-11

Texas Department of Transportation
© 2011

SH 289 DRAINAGE PLAN AND PROFILE

STA. 434+00.00 TO STA. 445+00.00

SCALE: V: 1"=10' H: 1"=100' SHEET 26 OF 40

DESIGN	FED. RD. DIV. NO.	STATE PROJECT NO.		HIGHWAY NO.
AMW	6	(SEE TITLE SHEET)		SH 289
GRAPHICS AMW	STATE	DISTRICT	COUNTY	SHEET NO.
CHECK NVS	TEXAS	DALLAS	COLLIN	331
CHECK NVS	CONTROL 0091	SECTION 04	JOB 055	

T:\DALDGN#A\SH 289 Collin\THE PLANS\Drainage Storm Sewer\Drainage PlanProfile Sheets\SS#PlanProfile#13.dgn

4/7/2011

R-201104-01

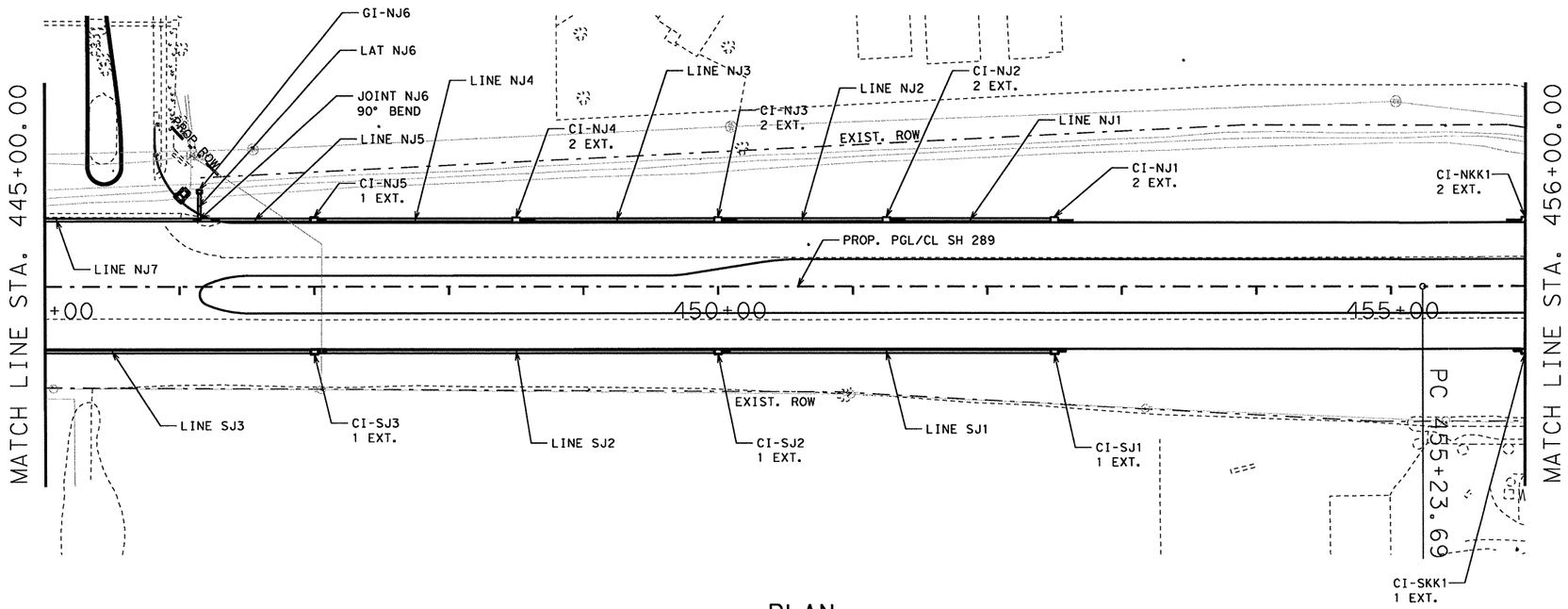

PLAN

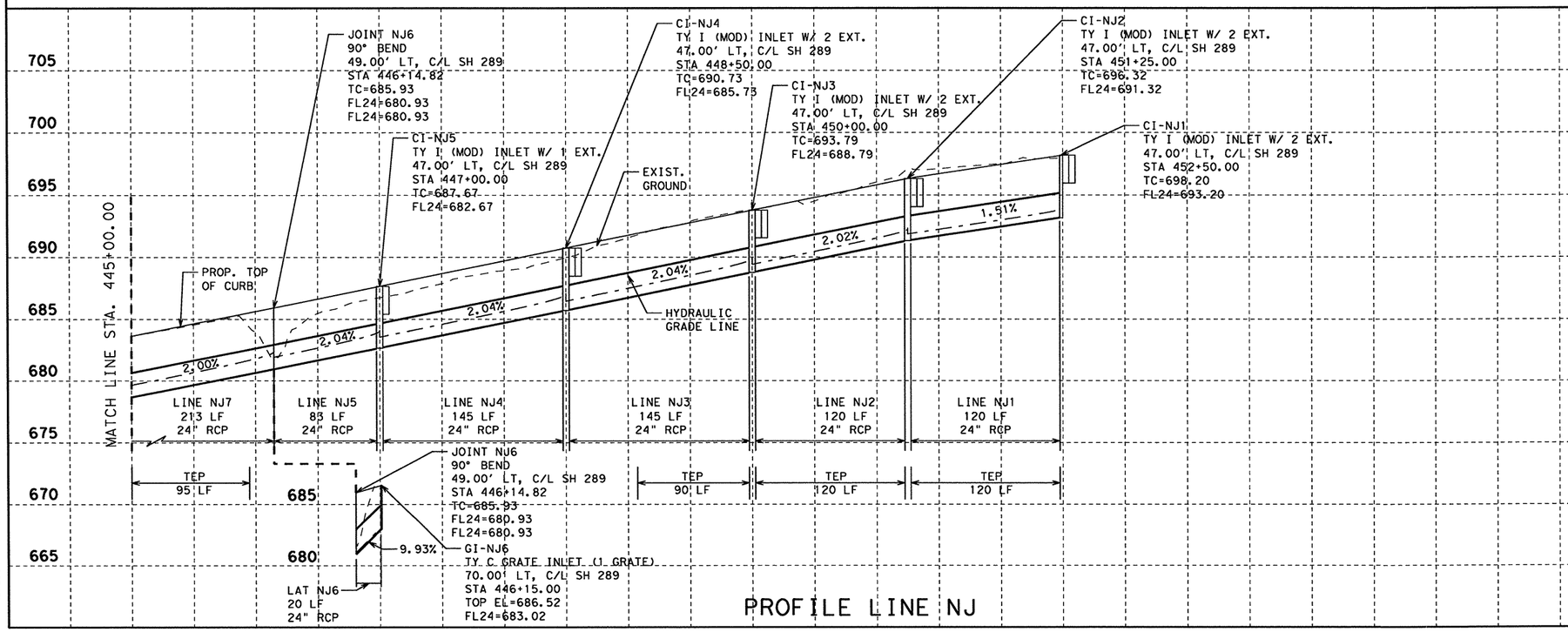

PROFILE LINE NJ

STATE OF TEXAS
NICHOLAS VON SPENCER
93702
LICENSED
PROFESSIONAL ENGINEER

Nicholas Von Spencer, P.E. 4-7-11
Signature of Registrant & Date

Texas Department of Transportation
© 2011

SH 289 DRAINAGE PLAN AND PROFILE

STA. 445+00.00 TO STA. 456+00.00

SCALE: V: 1"=10' H: 1"=100' SHEET 27 OF 40

DESIGN	FED. RD. DIV. NO.	STATE PROJECT NO.		HIGHWAY NO.
AMW	6	(SEE TITLE SHEET)		SH 289
GRAPHICS AMW	STATE	DISTRICT	COUNTY	SHEET NO.
CHECK NVS	TEXAS	DALLAS	COLLIN	332
CHECK NVS	CONTROL	SECTION	JOB	
	0091	04	055	

T:\DALDGN\4\SH 289 Collin\THE PLANS\Drainage Storm Sewer\Drainage PlanProfile Sheets\SS4PlanProfile14.dgn

4/7/2011

R-201104-01

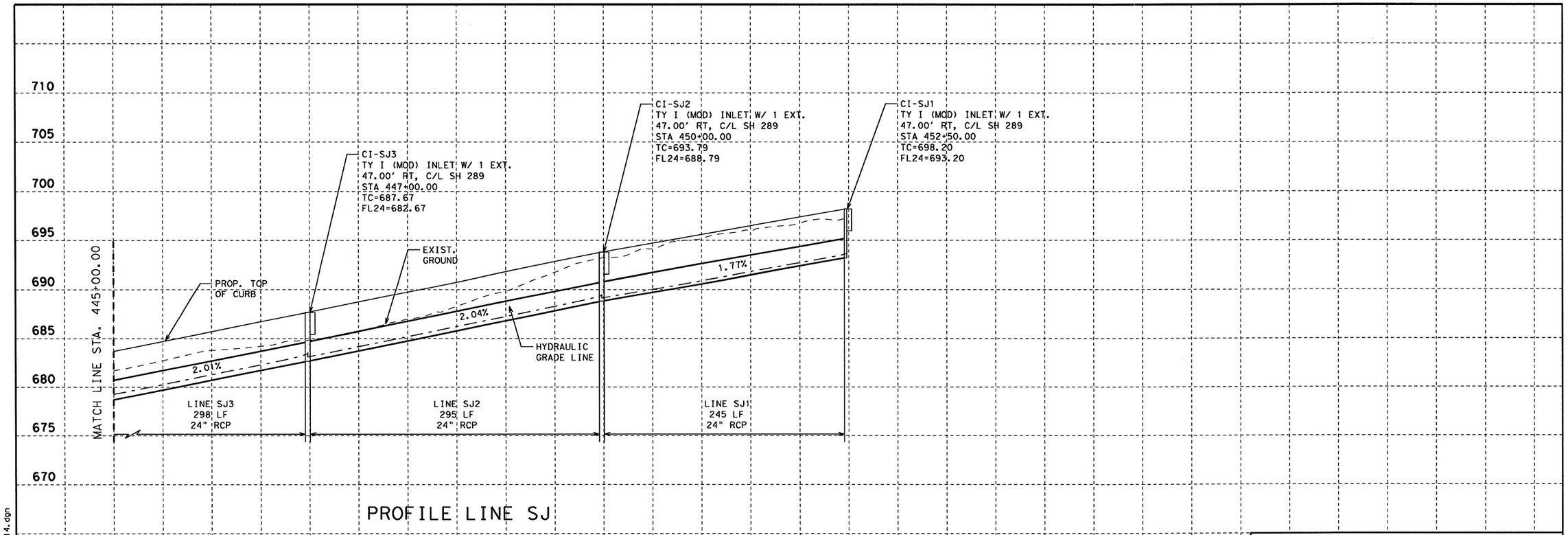

PROFILE LINE SJ

STATE OF TEXAS
NICHOLAS VON SPENCER
93702
LICENSED
PROFESSIONAL ENGINEER

Signature of Registrant, P.E. & Date 4-7-11

Texas Department of Transportation
© 2011

SH 289 DRAINAGE PLAN AND PROFILE

STA. 445+00.00 TO STA. 456+00.00

SCALE: V: 1"=10' H: 1"=100' SHEET 28 OF 40

DESIGN	FED. RD. DIV. NO.	STATE PROJECT NO.		HIGHWAY NO.
AMW	6	(SEE TITLE SHEET)		SH 289
GRAPHICS	STATE	DISTRICT	COUNTY	SHEET NO.
AMW	TEXAS	DALLAS	COLLIN	333
CHECK	CONTROL	SECTION	JOB	
NVS	0091	04	055	
CHECK NVS				

4/7/2011

T:\DALDGN*A\SH 289 Celina\THE PLANS\Drainage Storm Sewer\Drainage PlanProfile Sheets\SS*PlanProfile*14.dgn

R-201104-01

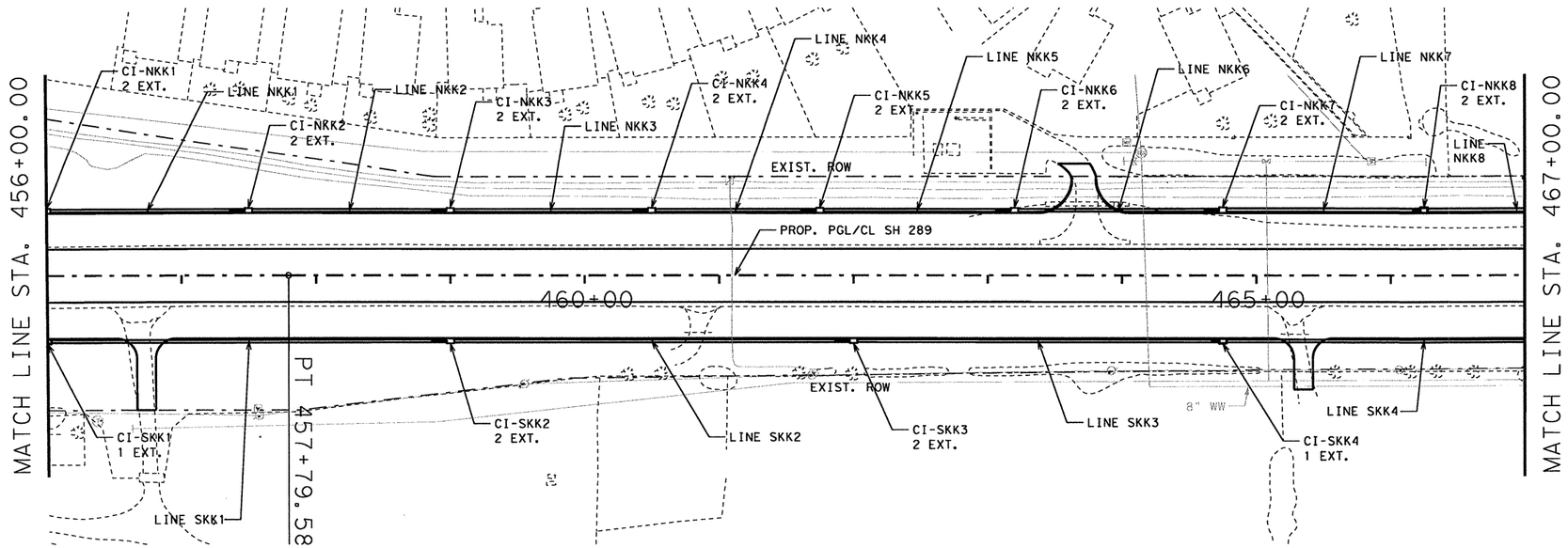

PLAN

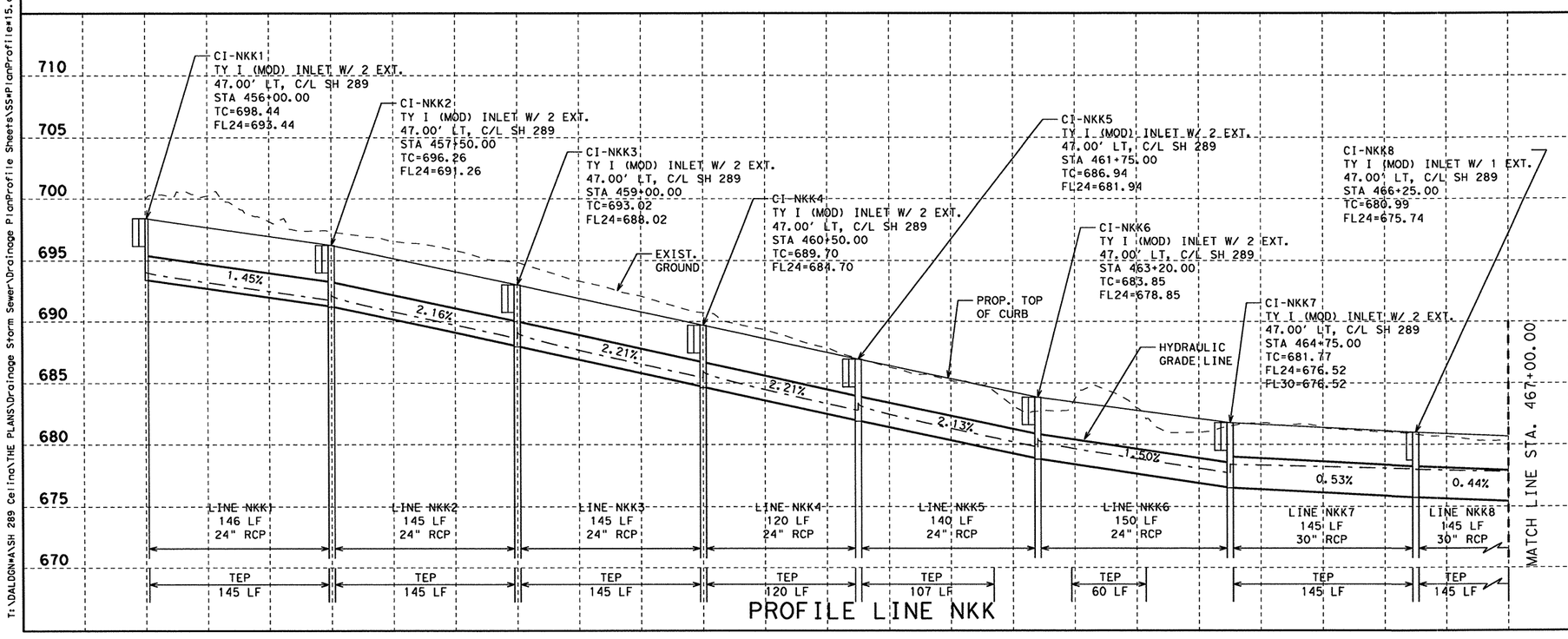

PROFILE LINE NKK

STATE OF TEXAS
NICHOLAS VON SPENCER
93702
LICENSED
PROFESSIONAL ENGINEER

Nicholas V Spencer, P.E. 4-7-11
Signature of Registrant & Date

Texas Department of Transportation
© 2011

SH 289 DRAINAGE PLAN AND PROFILE

STA. 456+00.00 TO STA. 467+00.00

SCALE: V: 1"=10' H: 1"=100' SHEET 29 OF 40

DESIGN	FED. RD. DIV. NO.	STATE PROJECT NO.		HIGHWAY NO.
AMW	6	(SEE TITLE SHEET)		SH 289
GRAPHICS	STATE	DISTRICT	COUNTY	SHEET NO.
AMW	TEXAS	DALLAS	COLLIN	334
CHECK	CONTROL	SECTION	JOB	
NVS	0091	04	055	
CHECK				
NVS				

T:\DALDGN\ASH 289 Celina\THE PLANS\Drainage Storm Sewer\Drainage PlanProfile Sheets\SS*PlanProfile*15.dgn

4/7/2011

R-201104-01

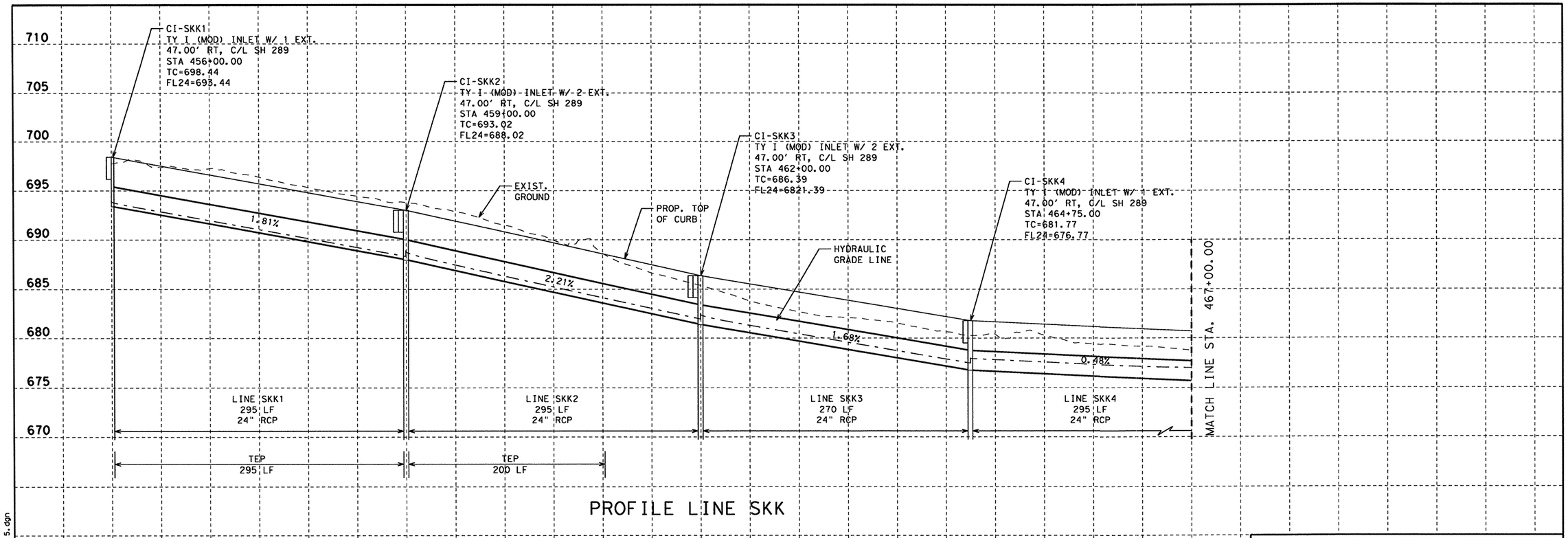

PROFILE LINE SKK

STATE OF TEXAS
NICHOLAS VON SPENCER
93702
LICENSED
PROFESSIONAL ENGINEER

Nicholas Von Spencer, P.E. 4-7-11
Signature of Registrant & Date

Texas Department of Transportation
© 2011

SH 289 DRAINAGE PLAN AND PROFILE

STA. 456+00.00 TO STA. 467+00.00

SCALE: V: 1"=10' H: 1"=100' SHEET 30 OF 40

DESIGN	FED. RD. DIV. NO.	STATE PROJECT NO.		HIGHWAY NO.
AMW	6	(SEE TITLE SHEET)		SH 289
GRAPHICS AMW	STATE	DISTRICT	COUNTY	SHEET NO.
CHECK NVS	TEXAS	DALLAS	COLLIN	335
CHECK NVS	CONTROL 0091	SECTION 04	JOB 055	

4/7/2011

T:\DALDGN\A\SH 289 Celina\THE PLANS\Drainage Storm Sewer\Drainage PlanProfile Sheets\SS*PlanProfile*15.dgn

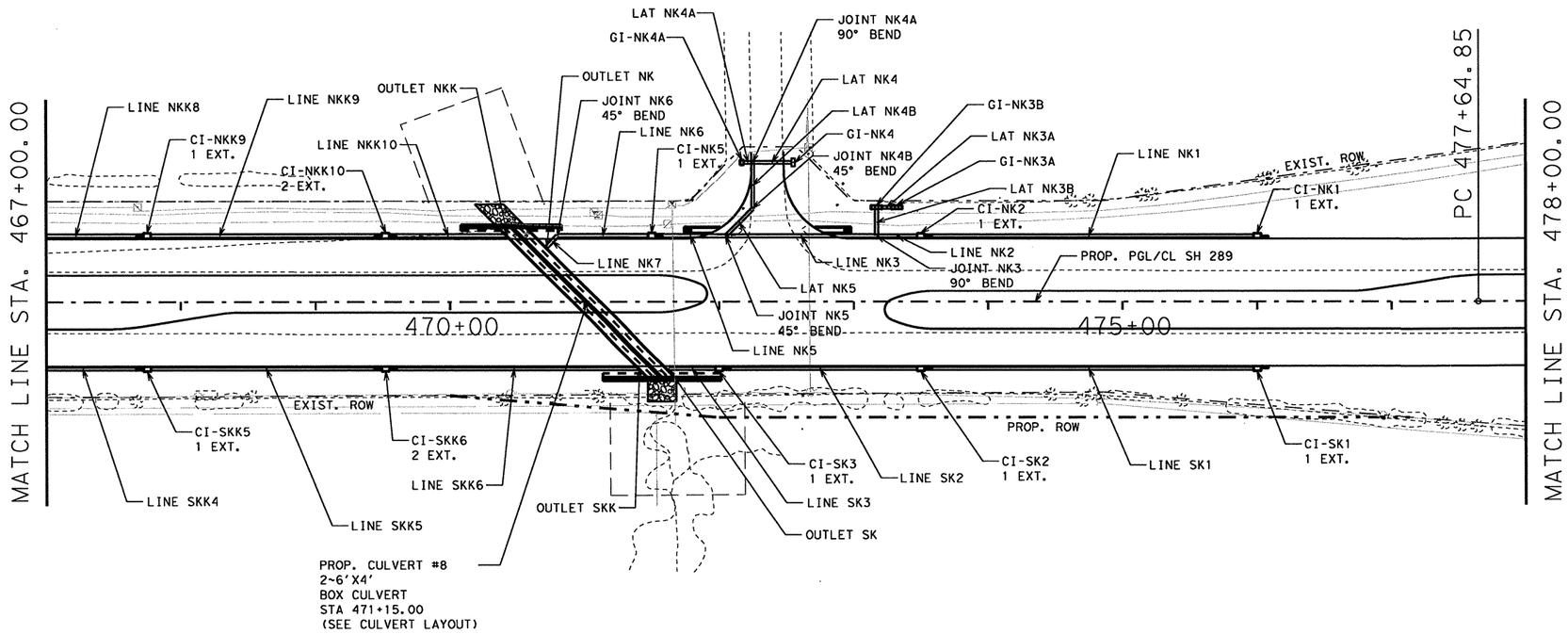

PLAN

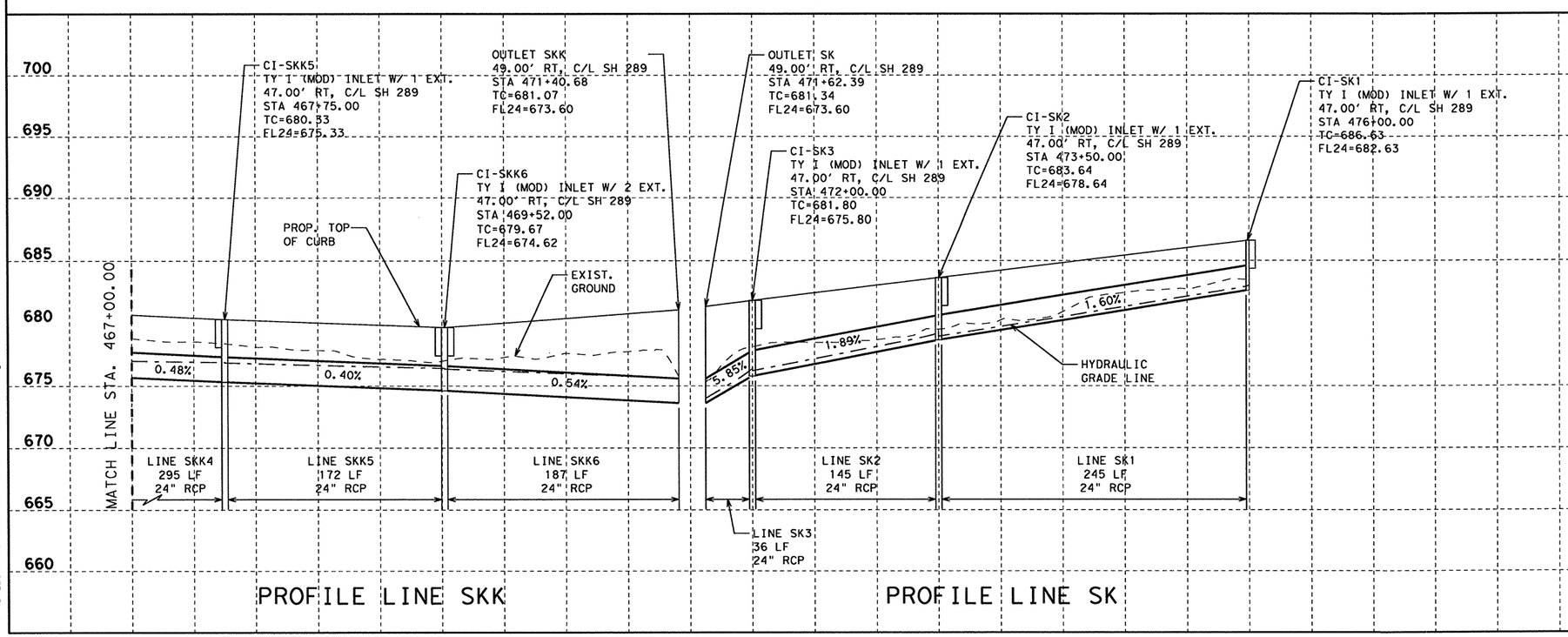

STATE OF TEXAS
NICHOLAS VON SPENCER
93702
LICENSED
PROFESSIONAL ENGINEER

Signature of Registrant & Date, P.E. 4-7-11

Texas Department of Transportation
© 2011

SH 289 DRAINAGE PLAN AND PROFILE

STA. 467+00.00 TO STA. 478+00.00

SCALE: V: 1"=10' H: 1"=100' SHEET 31 OF 40

DESIGN	FED. RD. DIV. NO.	STATE PROJECT NO.		HIGHWAY NO.
AMW	6	(SEE TITLE SHEET)		SH 289
GRAPHICS AMW	STATE	DISTRICT	COUNTY	SHEET NO.
CHECK NVS	TEXAS	DALLAS	COLLIN	336
CHECK NVS	CONTROL	SECTION	JOB	
	0091	04	055	

T:\DALDGN*A\SH 289 Celina\THE PLANS\Drainage Storm Sewer\Drainage PlanProfile Sheets\SS*PlanProfile*16.dgn

4/7/2011

R-201104-01

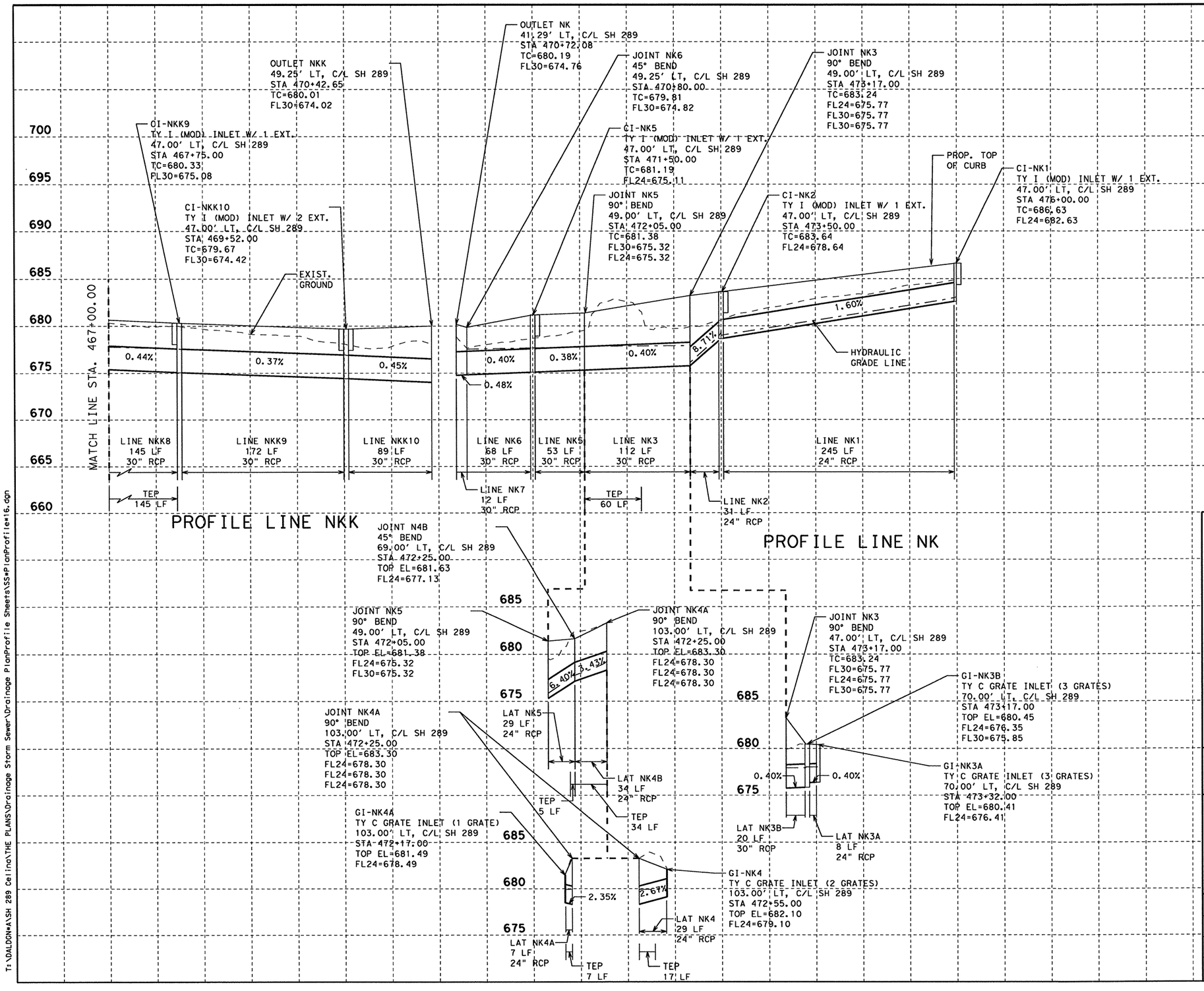

STATE OF TEXAS
NICHOLAS VON SPENCER
93702
LICENSED PROFESSIONAL ENGINEER

Nicholas Von Spencer, P.E. 4-7-11
Signature of Registrant & Date

Texas Department of Transportation
© 2011

SH 289 DRAINAGE PLAN AND PROFILE

STA. 467+00.00 TO STA. 478+00.00

SCALE: V: 1"=10' H: 1"=100' SHEET 32 OF 40

DESIGN	FED. RD. DIV. NO.	STATE PROJECT NO.		HIGHWAY NO.
AMW	6	(SEE TITLE SHEET)		SH 289
GRAPHICS	STATE	DISTRICT	COUNTY	SHEET NO.
AMW	TEXAS	DALLAS	COLLIN	337
CHECK	CONTROL	SECTION	JOB	
NVS	0091	04	055	
CHECK				
NVS				

4/7/2011

T:\DALDGN*A\SH 289 Celina\THE PLANS\Drainage Storm Sewer\Drainage PlanProfile Sheets\SS*PlanProfile*16.dgn

R-201104-01

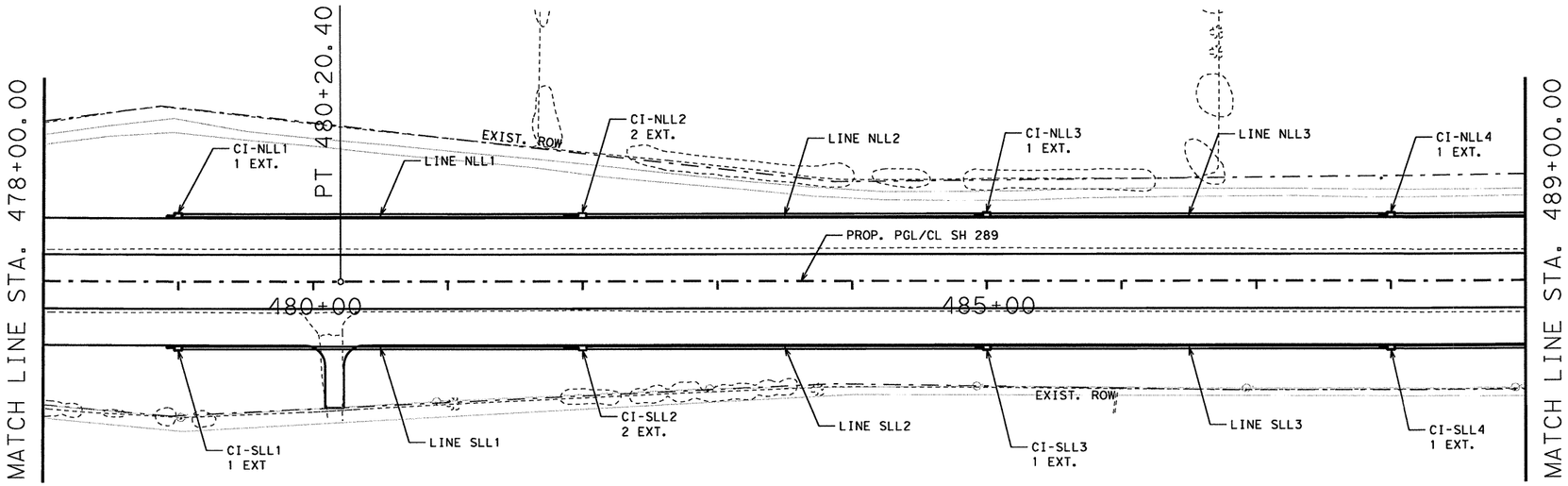

PLAN

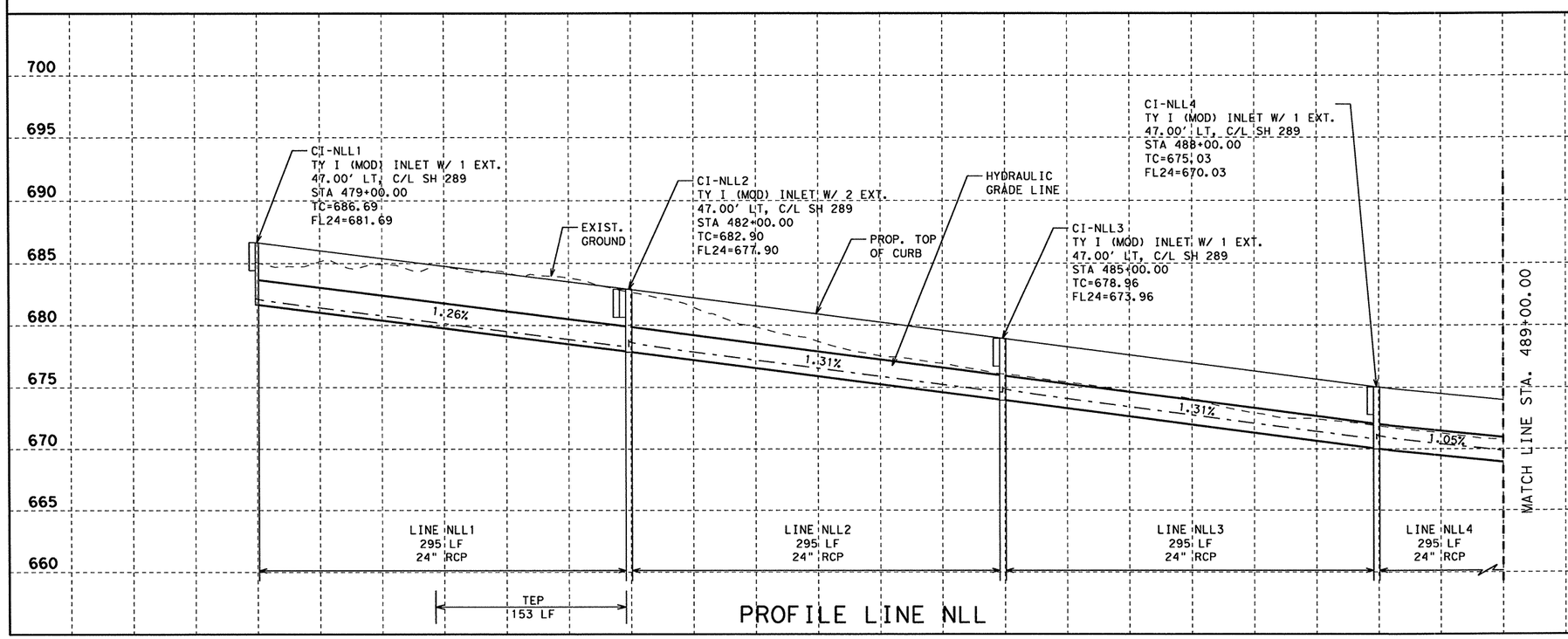

PROFILE LINE NLL

STATE OF TEXAS
NICHOLAS VON SPENCER
93702
LICENSED
PROFESSIONAL ENGINEER

Nicholas V Spencer, P.E. 4-7-11
Signature of Registrant & Date

Texas Department of Transportation
© 2011

SH 289 DRAINAGE PLAN AND PROFILE

STA. 478+00.00 TO STA. 489+00.00

SCALE: V: 1"=10' H: 1"=100' SHEET 33 OF 40

DESIGN	FED. RD. DIV. NO.	STATE PROJECT NO.		HIGHWAY NO.
AMW	6	(SEE TITLE SHEET)		SH 289
GRAPHICS	STATE	DISTRICT	COUNTY	SHEET NO.
AMW	TEXAS	DALLAS	COLLIN	338
CHECK	CONTROL	SECTION	JOB	
NVS	0091	04	055	
CHECK				
NVS				

T:\DALDGN*A\SH 289 Celina\THE PLANS\Drainage Storm Sewer\Drainage PlanProfile Sheets\SS*PlanProfile*17.dgn

4/7/2011

R-201104-01

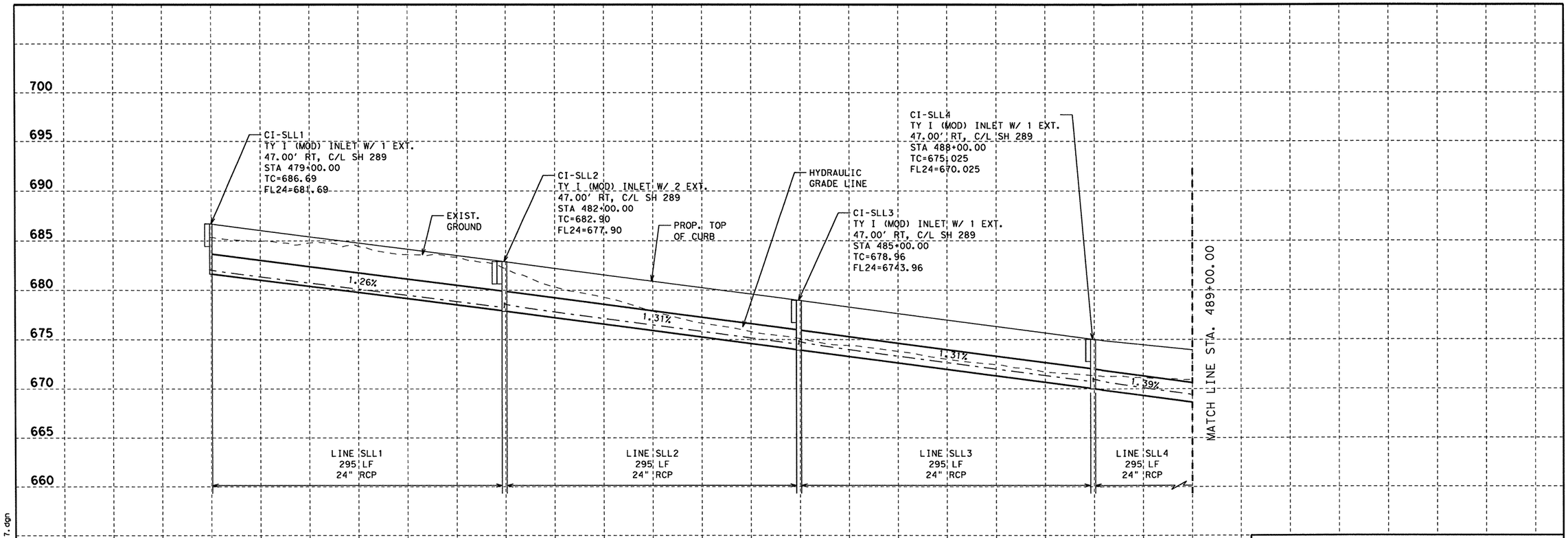

PROFILE LINE SLL

STATE OF TEXAS
NICHOLAS VON SPENCER
93702
LICENSED PROFESSIONAL ENGINEER

Signature of Registrant , P.E. & Date 4-7-11

Texas Department of Transportation
© 2011

SH 289 DRAINAGE PLAN AND PROFILE

STA. 478+00.00 TO STA. 489+00.00

SCALE: V: 1"=10' H: 1"=100' SHEET 34 OF 40

DESIGN	FED. RD. DIV. NO.	STATE PROJECT NO.		HIGHWAY NO.
AMW	6	(SEE TITLE SHEET)		SH 289
GRAPHICS AMW	STATE	DISTRICT	COUNTY	SHEET NO.
CHECK NVS	TEXAS	DALLAS	COLLIN	339
CHECK NVS	CONTROL 0091	SECTION 04	JOB 055	

4/7/2011

T:\DALDGN\A\SH 289 Celina\THE PLANS\Drainage Storm Sewer\Drainage PlanProfile Sheets\SS\PlanProfile\17.dgn

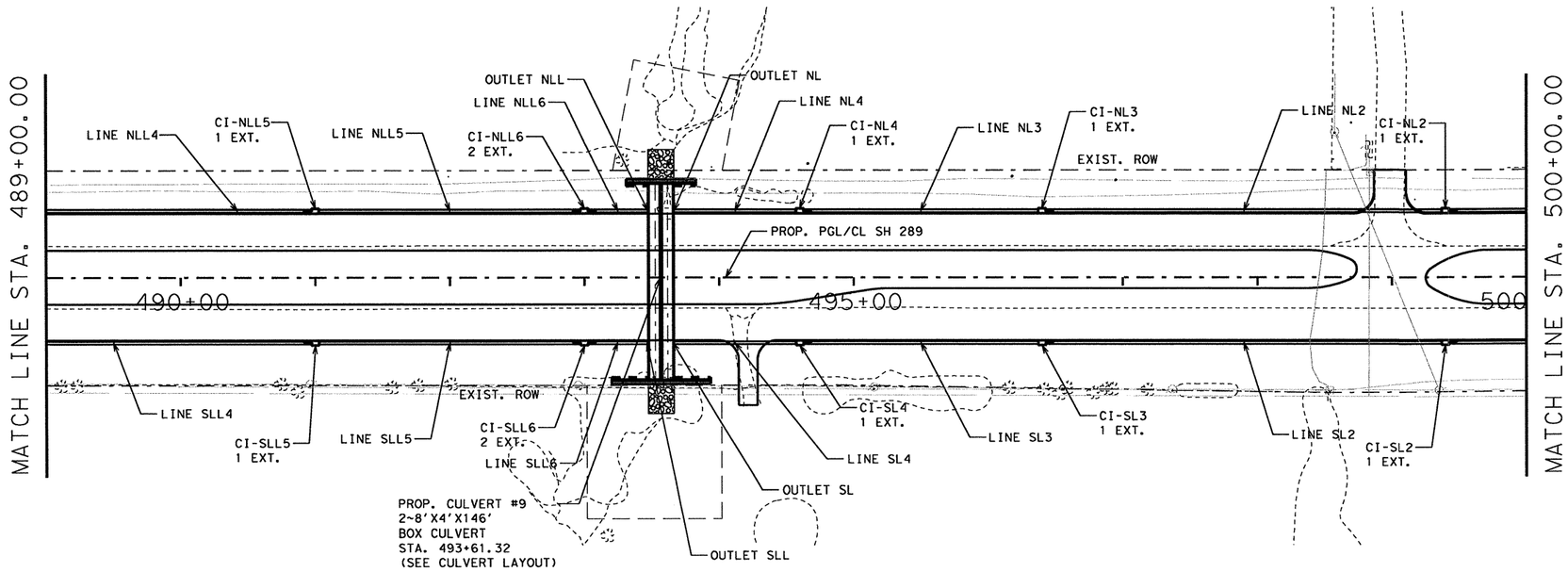

PLAN

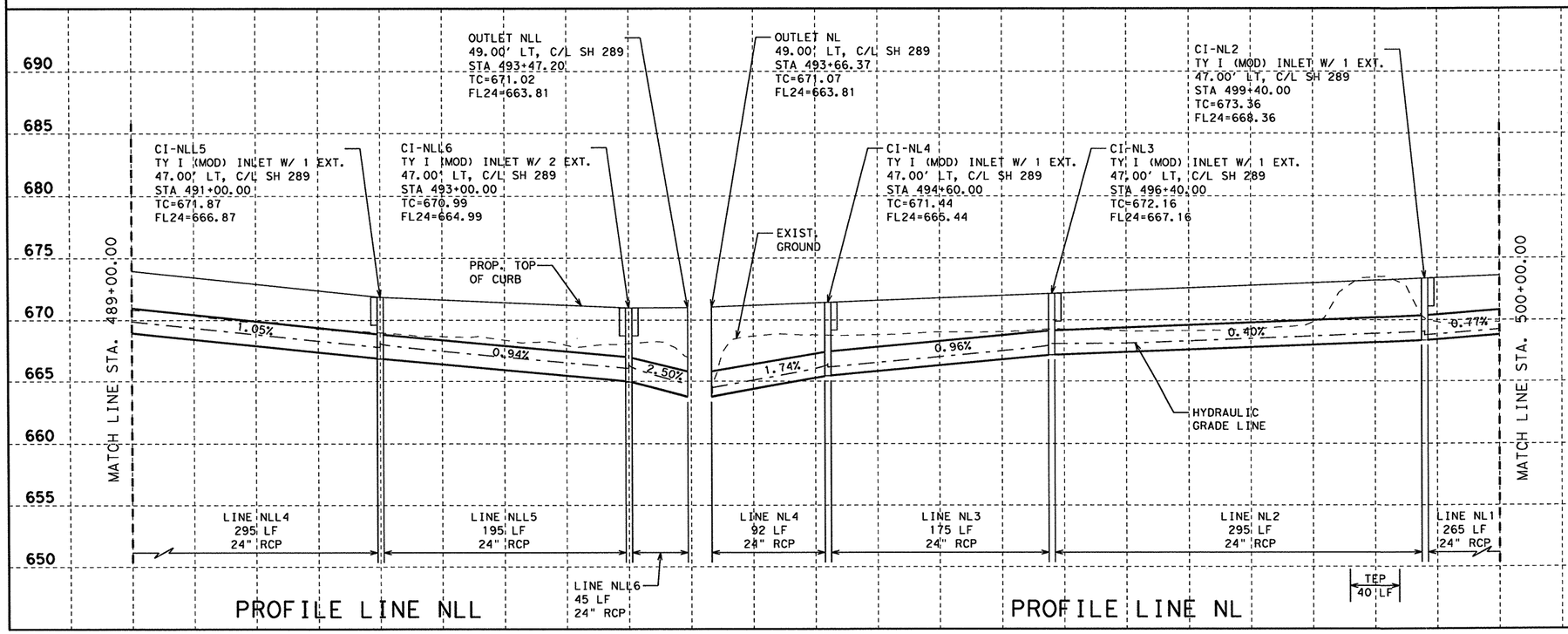

PROFILE LINE NLL

PROFILE LINE NL

STATE OF TEXAS
NICHOLAS VON SPENCER
93702
LICENSED PROFESSIONAL ENGINEER

Signature of Registrant & Date, P.E. 4-7-11

Texas Department of Transportation
© 2011

SH 289 DRAINAGE PLAN AND PROFILE

STA. 489+00.00 TO STA. 500+00.00

SCALE: V: 1"=10' H: 1"=100' SHEET 35 OF 40

DESIGN	FED. RD. DIV. NO.	STATE PROJECT NO.		HIGHWAY NO.
AMW	6	(SEE TITLE SHEET)		SH 289
GRAPHICS AMW	STATE	DISTRICT	COUNTY	SHEET NO.
CHECK NVS	TEXAS	DALLAS	COLLIN	340
CHECK NVS	CONTROL	SECTION	JOB	
	0091	04	055	

T:\DALDGN#A\SH 289 Ceiling\THE PLANS\Drainage Storm Sewer\Drainage PlanProfile Sheets\SS#PlanProfile#18.dgn

4/7/2011

R-201104-01

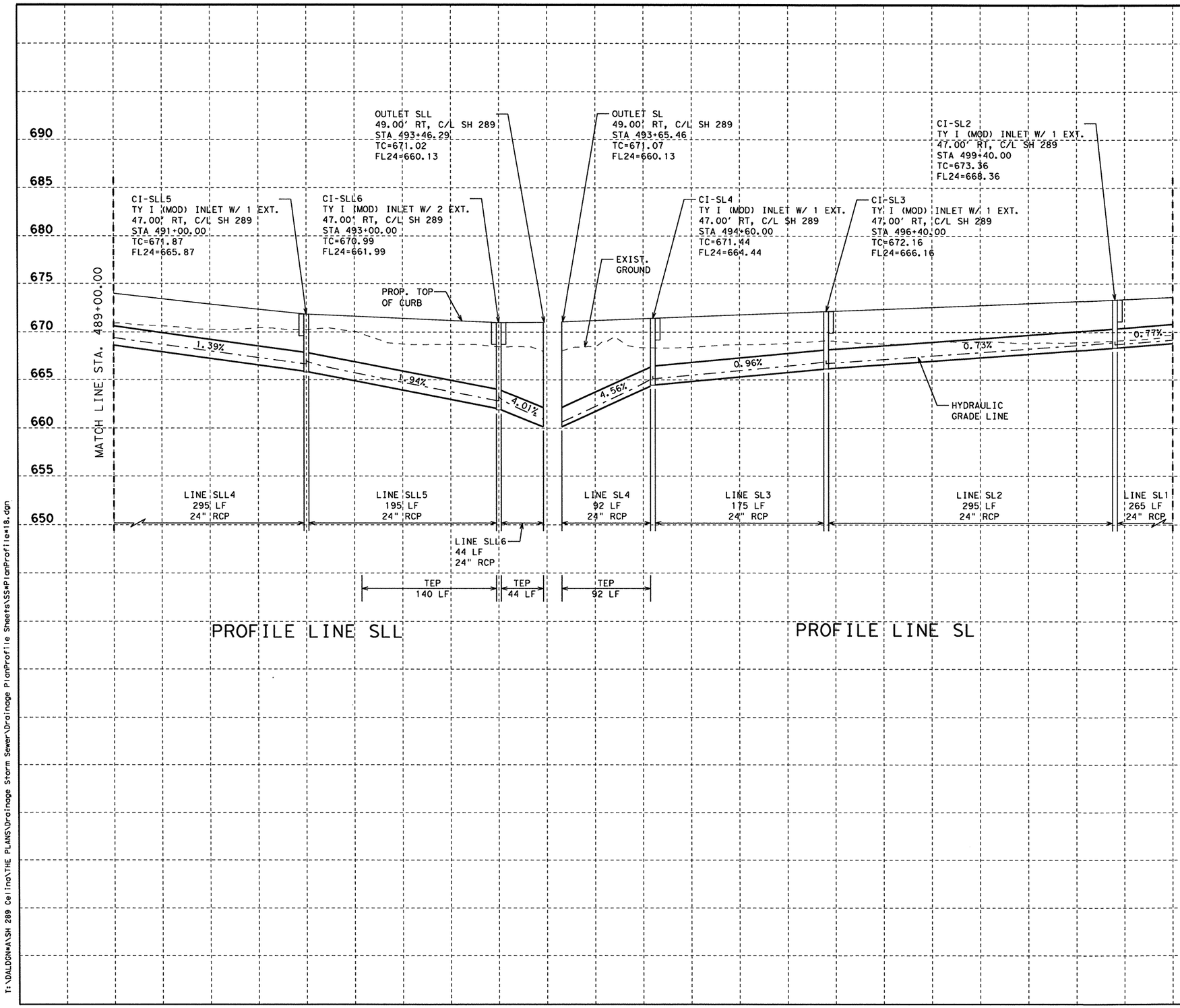

STATE OF TEXAS
NICHOLAS VON SPENCER
93702
LICENSED
PROFESSIONAL ENGINEER

Signature of Registrant & Date, P.E. 4-7-11

Texas Department of Transportation
© 2011

SH 289 DRAINAGE PLAN AND PROFILE

STA. 489+00.00 TO STA. 500+00.00

SCALE: V: 1"=10' H: 1"=100' SHEET 36 OF 40

DESIGN	FED. RD. DIV. NO.	STATE PROJECT NO.		HIGHWAY NO.
AMW	6	(SEE TITLE SHEET)		SH 289
GRAPHICS	STATE	DISTRICT	COUNTY	SHEET NO.
AMW	TEXAS	DALLAS	COLLIN	341
CHECK	CONTROL	SECTION	JOB	
NVS	0091	04	055	
CHECK				
NVS				

4/7/2011

T:\DALDGN#A\SH 289 Celina\THE PLANS\Drainage Storm Sewer\Drainage PlanProfile Sheets\SS#PlanProfile#18.dgn

R-201104-01

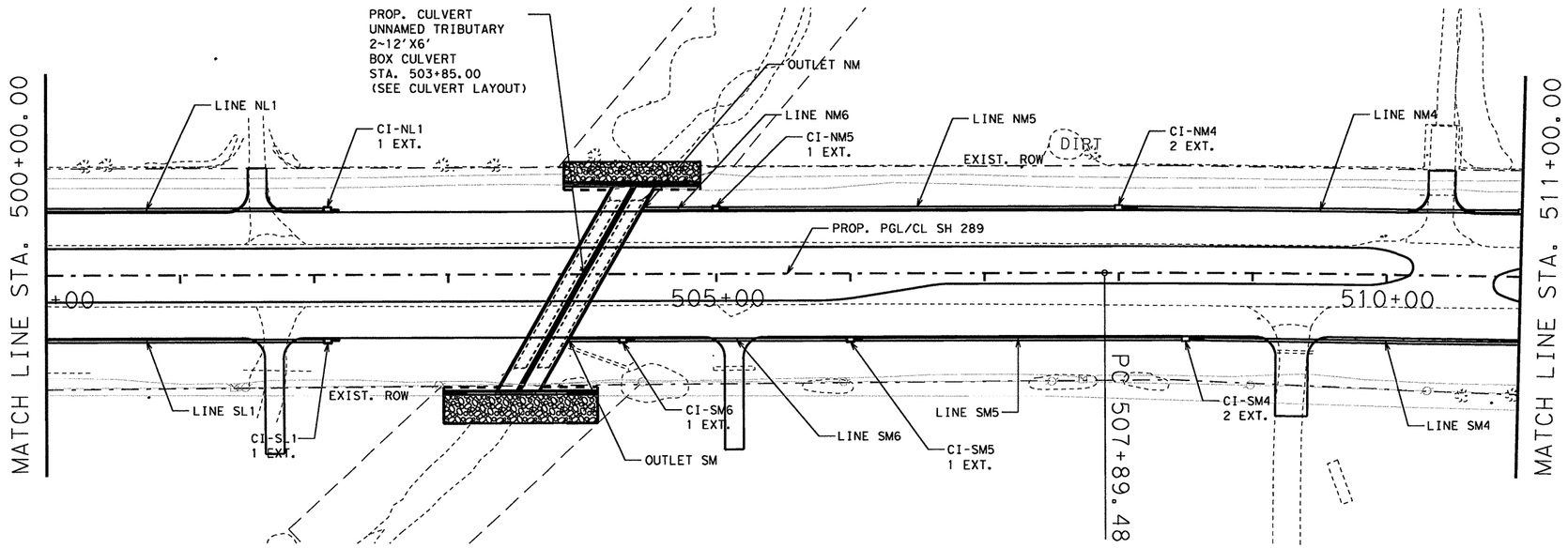

PLAN

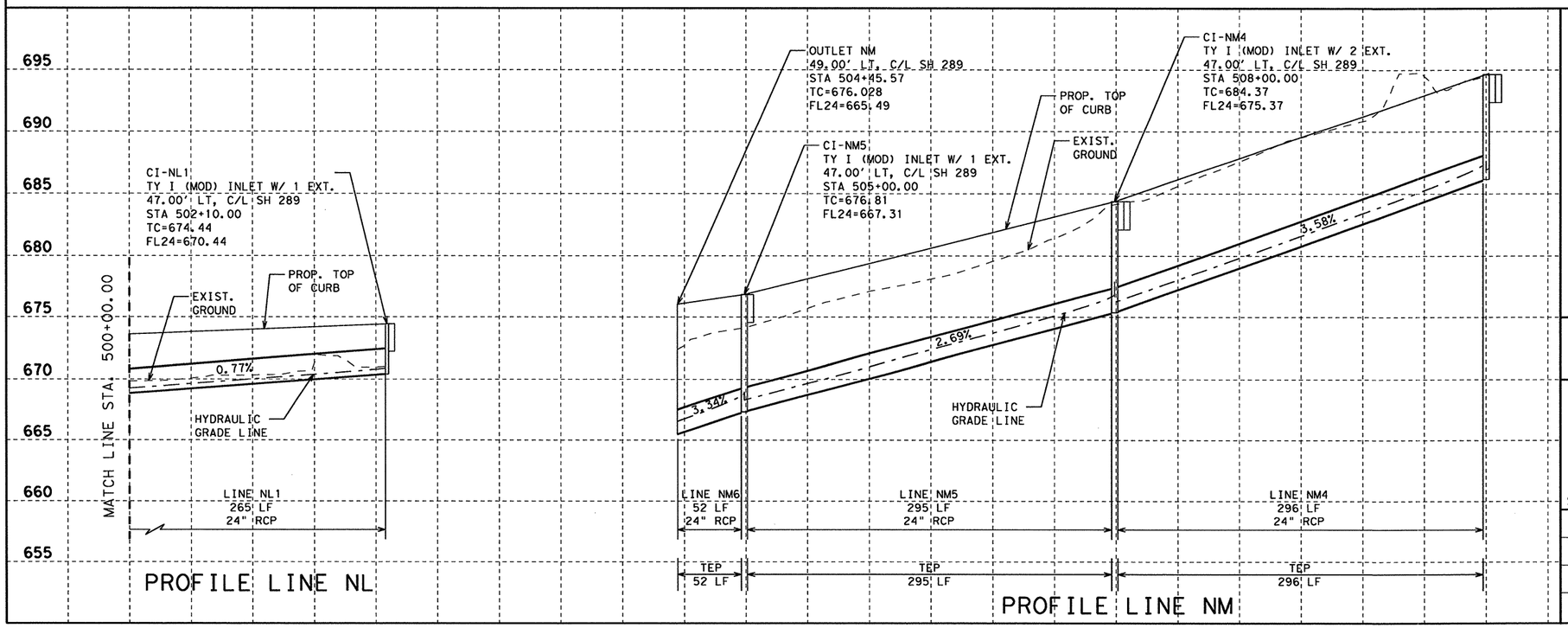

STATE OF TEXAS
NICHOLAS VON SPENCER
93702
LICENSED
PROFESSIONAL ENGINEER

Signature of Registrant & Date, P.E. 4-7-11

Texas Department of Transportation
© 2011

SH 289 DRAINAGE PLAN AND PROFILE

STA. 500+00.00 TO STA. 511+00.00

SCALE: V: 1"=10' H: 1"=100' SHEET 37 OF 40

DESIGN	FED. RD. DIV. NO.	STATE PROJECT NO.		HIGHWAY NO.
AMW	6	(SEE TITLE SHEET)		SH 289
GRAPHICS	STATE	DISTRICT	COUNTY	SHEET NO.
AMW	TEXAS	DALLAS	COLLIN	342
CHECK	CONTROL	SECTION	JOB	
NVS	0091	04	055	
CHECK				
NVS				

T:\DALDGN#A\SH 289 Celina\THE PLANS\Drainage Storm Sewer\Drainage PlanProfile Sheets\SS#PlanProfile#19.dgn

4/7/2011

R-201104-01

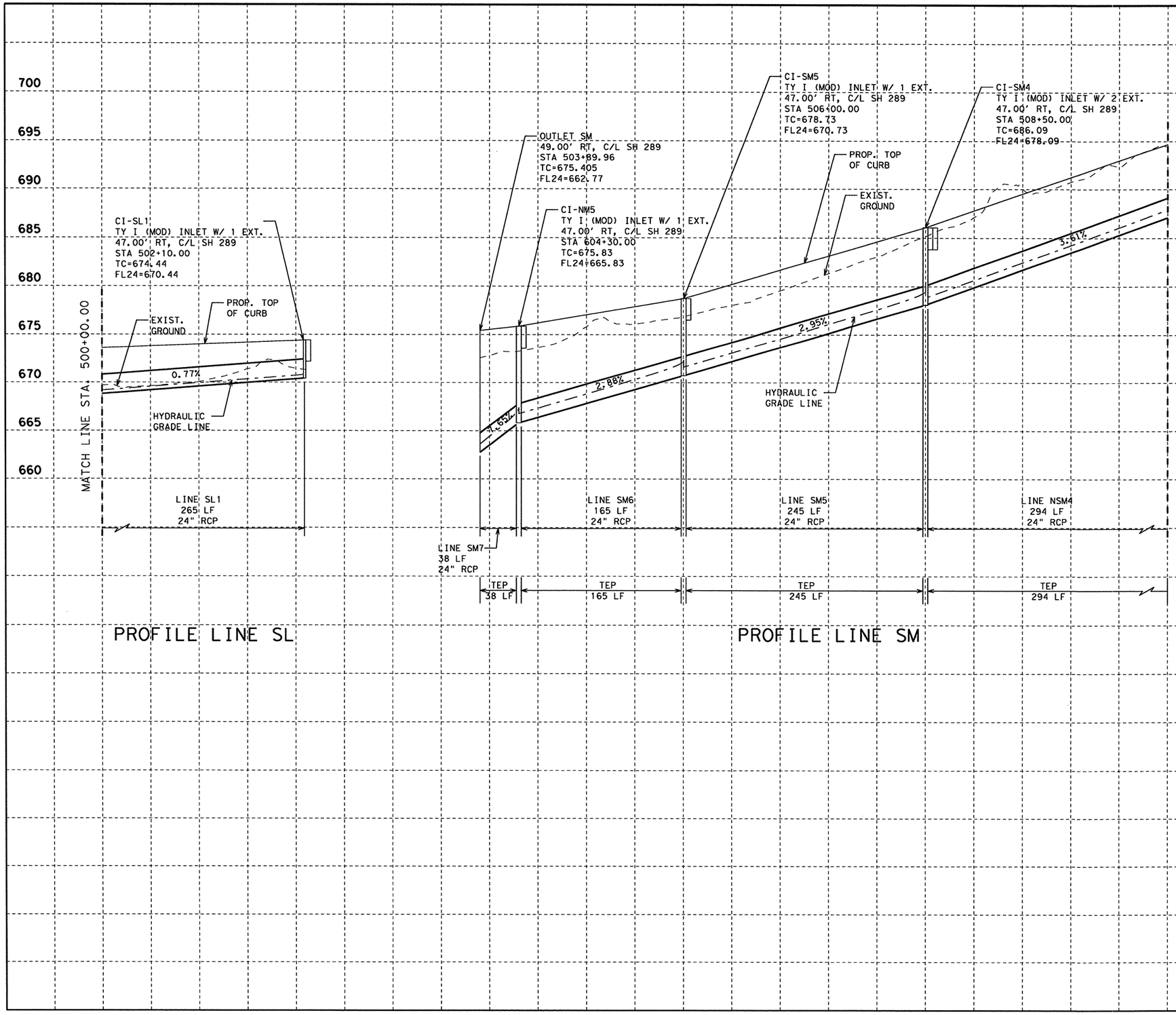

STATE OF TEXAS
NICHOLAS VON SPENCER
93702
LICENSED PROFESSIONAL ENGINEER

Nicholas Von Spencer, P.E. 4-7-11
Signature of Registrant & Date

Texas Department of Transportation
© 2011

SH 289 DRAINAGE PLAN AND PROFILE

STA. 500+00.00 TO STA. 511+00.00

SCALE: V: 1"=10' H: 1"=100' SHEET 38 OF 40

DESIGN	FED. RD. DIV. NO.	STATE PROJECT NO.		HIGHWAY NO.
AMW	6	(SEE TITLE SHEET)		SH 289
GRAPHICS	STATE	DISTRICT	COUNTY	SHEET NO.
AMW	TEXAS	DALLAS	COLLIN	343
CHECK	CONTROL	SECTION	JOB	
NVS	0091	04	055	
CHECK NVS				

T:\DALDGN\A\SH 289 Celina\THE PLANS\Drainage Storm Sewer\Drainage PlanProfile Sheets\SSPlanProfile#19.dgn

4/7/2011

R-201104-01

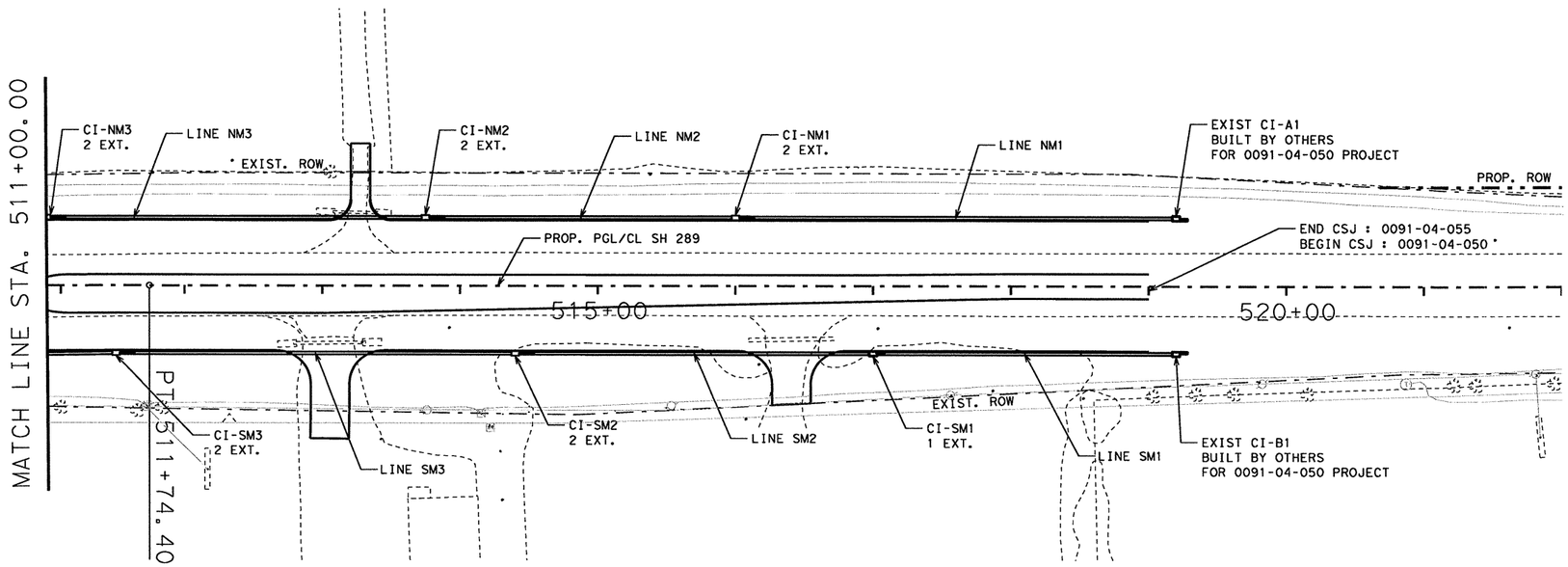

PLAN

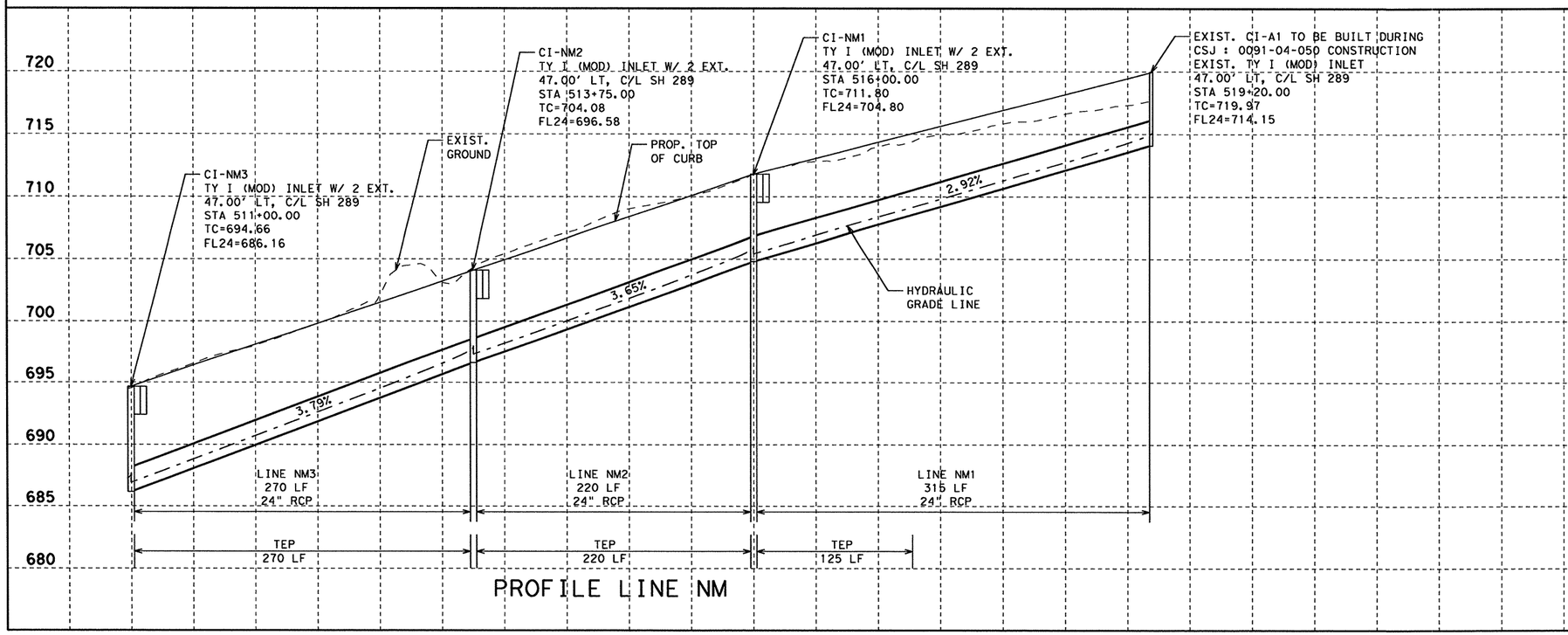

PROFILE LINE NM

STATE OF TEXAS
NICHOLAS VON SPENCER
93702
LICENSED
PROFESSIONAL ENGINEER

Nicholas Von Spencer, P.E. 4-7-11
Signature of Registrant & Date

Texas Department of Transportation
© 2011

SH 289 DRAINAGE PLAN AND PROFILE

STA. 511+00.00 TO END STA. 519+00.00

SCALE: V: 1"=10' H: 1"=100' SHEET 39 OF 40

DESIGN	FED. RD. DIV. NO.	STATE PROJECT NO.		HIGHWAY NO.
AMW	6	(SEE TITLE SHEET)		SH 289
GRAPHICS AMW	STATE	DISTRICT	COUNTY	SHEET NO.
CHECK NVS	TEXAS	DALLAS	COLLIN	344
CHECK NVS	CONTROL 0091	SECTION 04	JOB 055	

T:\DALDGN\A\SH 289 Celina\THE PLANS\Drainage Storm Sewer\Drainage PlanProfile Sheets\SS*PlanProfile*20.dgn

4/17/2011

R-201104-01

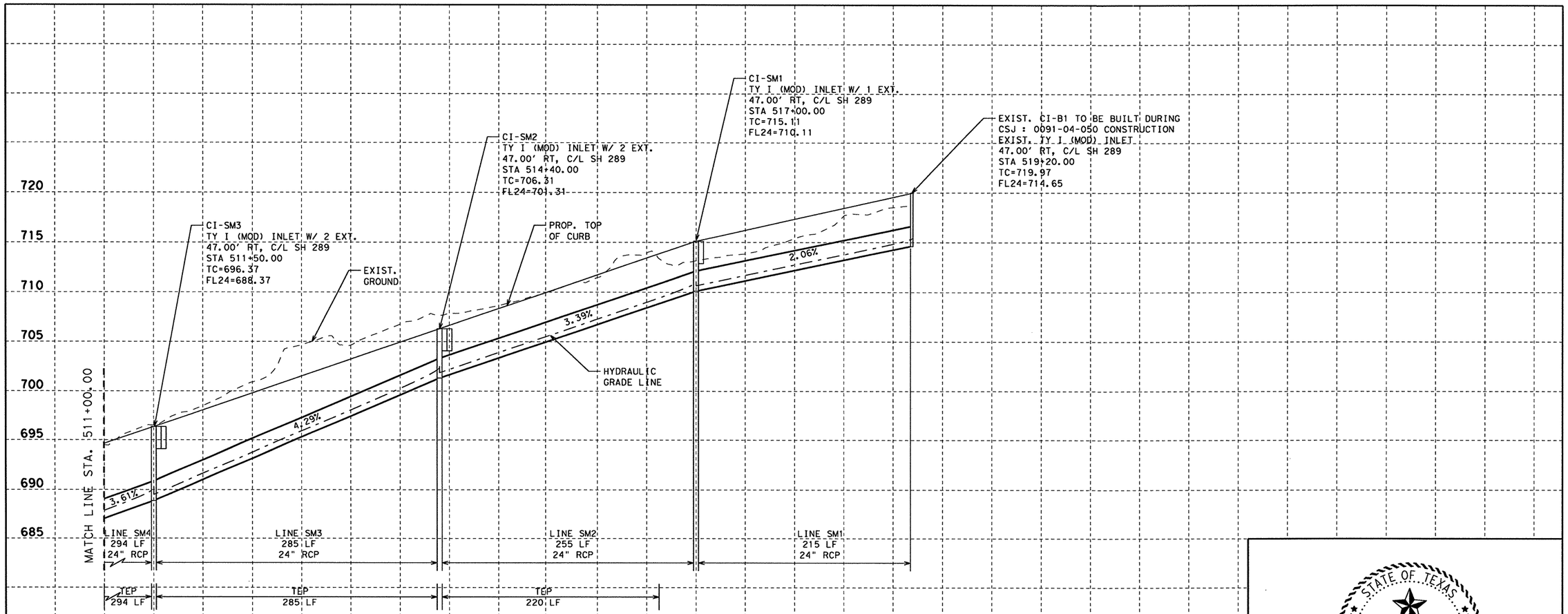

PROFILE LINE SM

STATE OF TEXAS
NICHOLAS VON SPENCER
93702
LICENSED
PROFESSIONAL ENGINEER

Nicholas Von Spencer, P.E. 4-7-11
Signature of Registrant & Date

Texas Department of Transportation
© 2011

SH 289
DRAINAGE PLAN AND PROFILE

STA. 511+00.00 TO END STA. 519+00.00

SCALE: V: 1"=10' H: 1"=100' SHEET 40 OF 40

DESIGN	FED. RD. DIV. NO.	STATE PROJECT NO.		HIGHWAY NO.
AMW	6	(SEE TITLE SHEET)		SH 289
GRAPHICS AMW	STATE	DISTRICT	COUNTY	SHEET NO.
CHECK NVS	TEXAS	DALLAS	COLLIN	345
CHECK NVS	CONTROL	SECTION	JOB	
	0091	04	055	

4/7/2011

T:\DALDGN*4\SH 289 Celina\THE PLANS\Drainage Storm Sewer\Drainage PlanProfile Sheets\SS*PlanProfile*20.dgn

R-201104-01

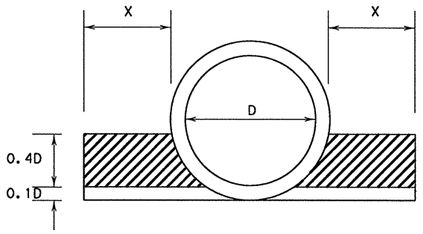

X = 1'-0" FOR PIPES 42" OR LESS
AND
X = 2'-0" FOR PIPES OVER 42"

CEMENT STABILIZED BACKFILL

FOR STORM SEWERS ON SLOPES
EQUAL TO OR GREATER THAN 10%

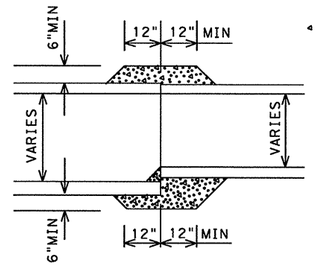

CONCRETE COLLAR FOR PIPE CONNECTION

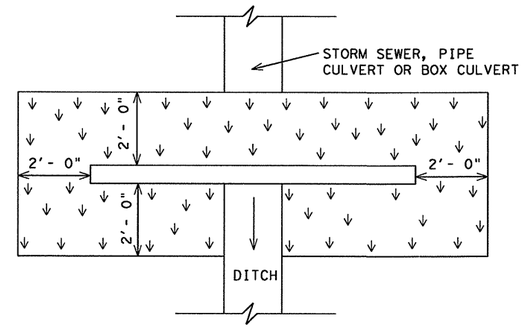

BLOCK SOD AT HEADWALL

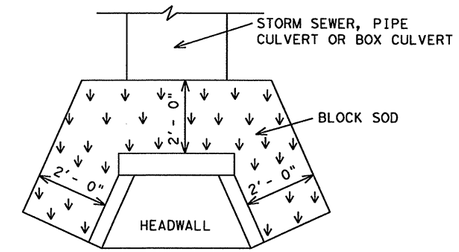

BLOCK SOD AT HEADWALL

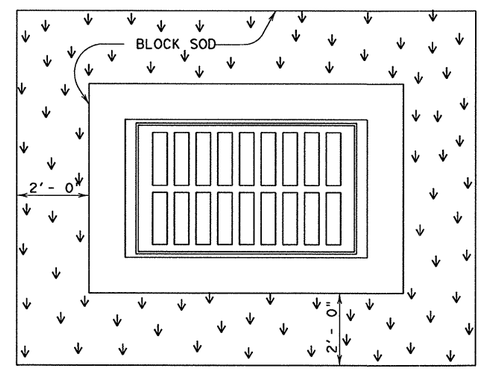

BLOCK SOD AT INLETS

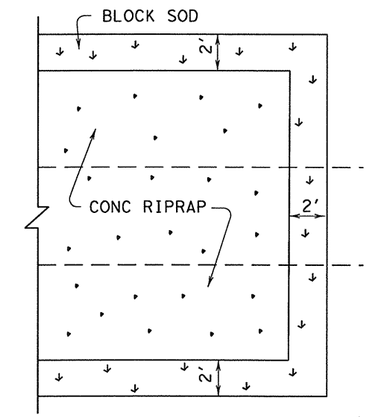

BLOCK SOD AT CONCRETE RIPRAP

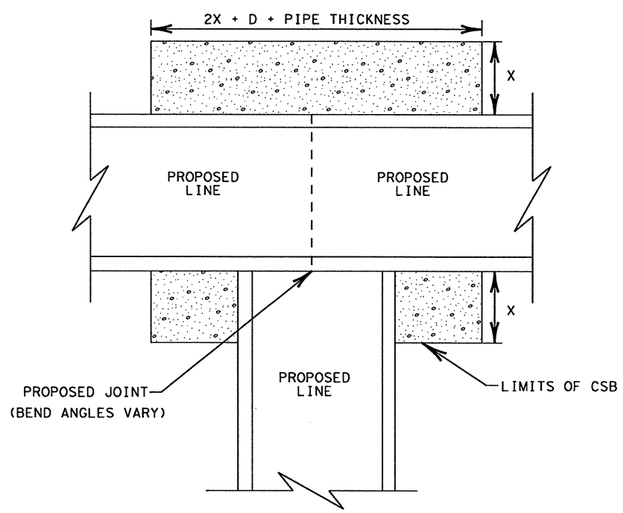

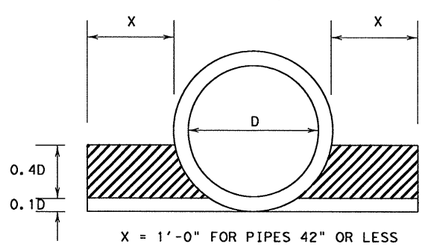

X = 1'-0" FOR PIPES 42" OR LESS
AND
X = 2'-0" FOR PIPES OVER 42"

CEMENT STABILIZED BACKFILL AT JOINTS

FOR STORM SEWER JOINTS WITH
DOWNSTREAM JOINT VELOCITIES
GREATER THAN 12 FPS

STATE OF TEXAS
NICHOLAS VON SPENCER
93702
LICENSED
PROFESSIONAL ENGINEER

Nicholas V Spencer, P.E. 4-7-11
Signature of Registrant & Date

Texas Department of Transportation
© 2011

MISCELLANEOUS DRAINAGE DETAILS

NO SCALE — SHEET 1 OF 1

DESIGN	FED. RD. DIV. NO.	FEDERAL AID PROJECT NO.		HIGHWAY NO.
AMW	6	(SEE TITLE SHEET)		SH 289
GRAPHICS AMW	STATE	DISTRICT	COUNTY	SHEET NO.
CHECK NVS	TEXAS	DALLAS	COLLIN	346
CHECK NVS	CONTROL	SECTION	JOB	
	0091	04	055	

T:\DALDGN*A\SH 289 Celina\THE PLANS\Miscellaneous Details\SH289*MiscDetails.dgn 4/7/2011

R-201104-01

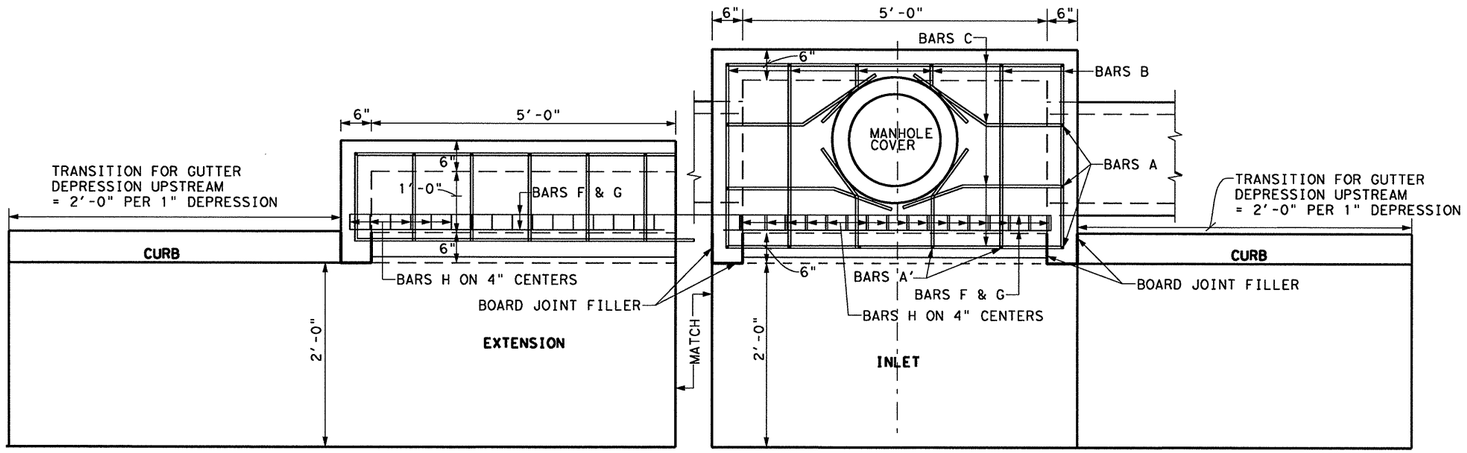

PLAN VIEW

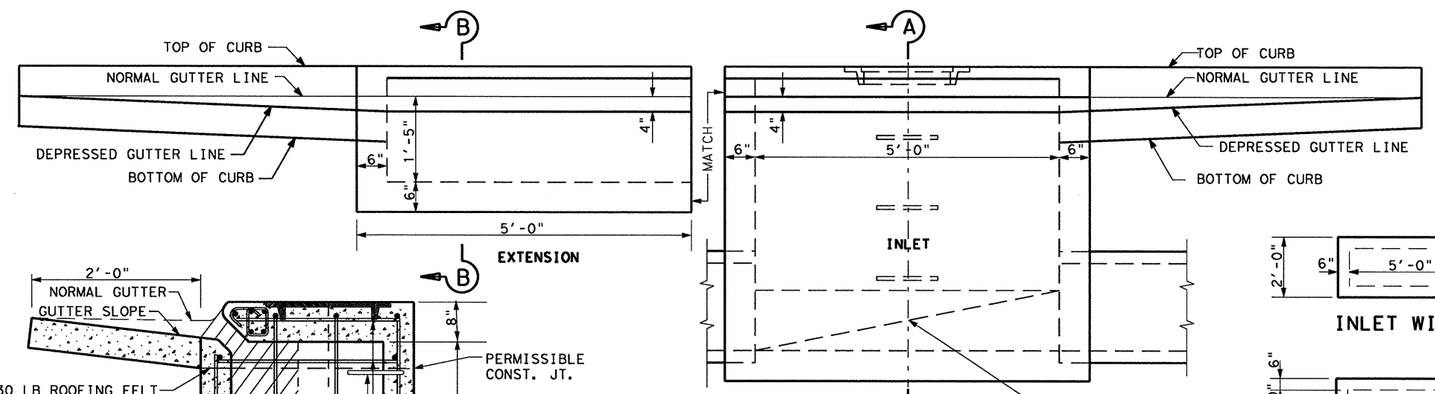

ELEVATION VIEW

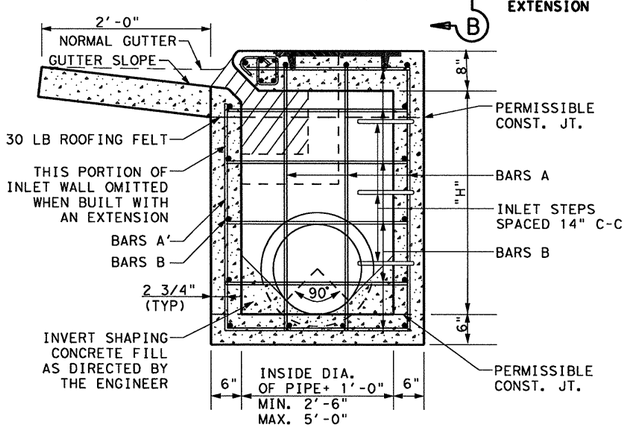

SECTION A-A

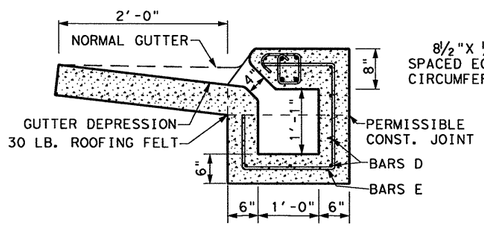

SECTION B-B

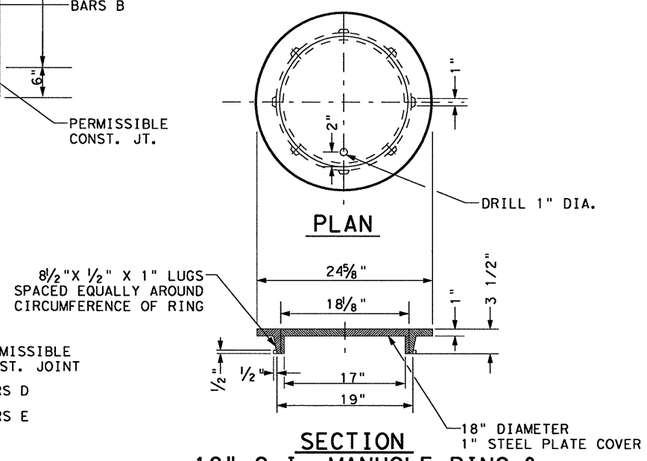

PLAN

SECTION

18" C.I. MANHOLE RING & STEEL PLATE COVER TY. A

NOTE: DIMENSIONS FOR CURB SECTIONS VARY ACCORDING TO LIMITS OF PROPOSED CURB TYPES.

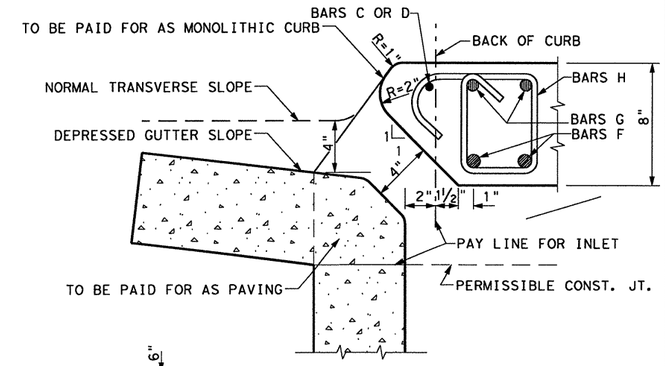

THROAT DETAIL

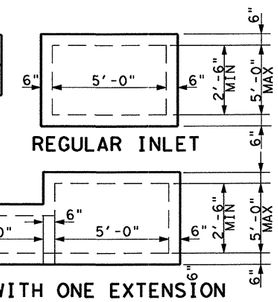

REGULAR INLET

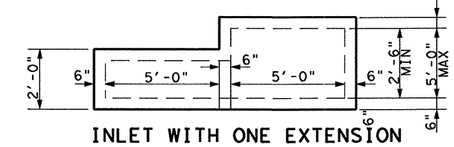

INLET WITH ONE EXTENSION

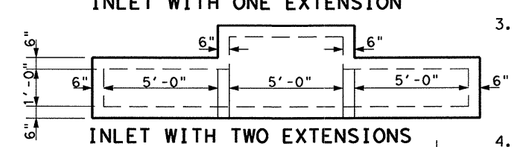

INLET WITH TWO EXTENSIONS

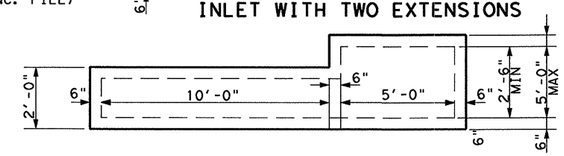

INLET WITH TWO EXTENSIONS - ONE SIDE

PLAN OF INLET AND EXTENSIONS

GENERAL NOTES:

1. ALL CONCRETE SHALL BE CLASS A. ALL EXPOSED CORNERS SHALL BE CHAMFERED 3/4".
2. CAST IRON STEPS, SPACED 14" AND LOCATED AS DIRECTED BY THE ENGINEER, SHALL BE PROVIDED AND INSTALLED IN ALL INLETS WHERE THE DEPTH "H" EXCEEDS 4'-0".
3. PAYMENT OF CURB INLETS AND EXTENSIONS THERETO AS SHOWN ON PLANS WILL BE MADE AT THE UNIT PRICE BID FOR "INLET (COMPLETE) (TYPE I)", "INLET EXTENSION".
4. DIMENSIONS RELATING TO REINFORCING STEEL ARE TO CENTERS OF BARS.
5. SEE SHEET NO. 2 OF 2 FOR INLET SUMMARY OF CONCRETE AND REINFORCING STEEL.

NOT TO SCALE

SHEET 1 OF 2

STATE OF TEXAS
NICHOLAS VON SPENCER
93702
LICENSED PROFESSIONAL ENGINEER

Signature of Registrant & Date: Nicholas V. Spencer, P.E. 4-7-11

Texas Department of Transportation
Dallas District

CURB INLET
TYPE I
(MOD)

CI(TY I)-08 (MOD)

FILE: CI(TY I)-08	DN: TxDOT	CK: TxDOT	DW:		CK:
© TxDOT	DISTRICT	FEDERAL AID PROJECT			SHEET
	DAL	(SEE TITLE SHEET)			347
	COUNTY	CONTROL	SECT	JOB	HIGHWAY
	COLLIN	0091	04	055	SH 289

DISCLAIMER:
The use of this standard is governed by the "Texas Engineering Practice Act". No warranty of any kind is made by TxDOT for any purpose whatsoever. TxDOT assumes no responsibility for the conversion of this standard to other formats or for incorrect results or damages resulting from its use.

LEVELS DISPLAYED

R-201104-01

REINFORCING STEEL AND CONCRETE IN TYPE I - 5FT. INLETS

INLET SIZE		STEEL																												TOTALS	
		BARS A				BARS A'				BARS B				BARS C				BARS F				BARS G				BARS H				Reinf. Steel	CL A Conc
H	W	NO.	SIZE	LENGTH	WEIGHT	NO.	SIZE	LENGTH	WEIGHT	NO.	SIZE	LENGTH	WEIGHT	NO.	SIZE	LENGTH	WEIGHT	NO.	SIZE	LENGTH	WEIGHT	NO.	SIZE	LENGTH	WEIGHT	NO.	SIZE	LENGTH	WEIGHT	LBS	*C.Y.
3.0	2.5	12	4	3'-10"	31	4	4	2'-6"	7	18	4	3'-2"	38	13	4	5'-8"	49	2	7	5'-8"	23	2	6	9'-8"	29	18	3	2'-7"	17	194	1.64
3.5	2.5	12	4	4'-4"	35	4	4	3'-0"	8	18	4	3'-2"	38	13	4	5'-8"	49	2	7	5'-8"	23	2	6	9'-8"	29	18	3	2'-7"	17	199	1.80
4.0	2.5	12	4	4'-10"	39	4	4	3'-6"	9	20	4	3'-2"	42	15	4	5'-8"	57	2	7	5'-8"	23	2	6	9'-8"	29	18	3	2'-7"	17	216	1.96
4.5	2.5	12	4	5'-4"	43	4	4	4'-0"	11	20	4	3'-2"	42	15	4	5'-8"	57	2	7	5'-8"	23	2	6	9'-8"	29	18	3	2'-7"	17	222	2.11
5.0	2.5	12	4	5'-10"	47	4	4	4'-6"	12	22	4	3'-2"	47	17	4	5'-8"	64	2	7	5'-8"	23	2	6	9'-8"	29	18	3	2'-7"	17	239	2.27
5.5	2.5	12	4	6'-4"	51	4	4	5'-0"	13	22	4	3'-2"	47	17	4	5'-8"	64	2	7	5'-8"	23	2	6	9'-8"	29	18	3	2'-7"	17	244	2.42
6.0	2.5	12	4	6'-10"	55	4	4	5'-6"	15	24	4	3'-2"	51	19	4	5'-8"	72	2	7	5'-8"	23	2	6	9'-8"	29	18	3	2'-7"	17	262	2.59
6.5	2.5	12	4	7'-4"	59	4	4	6'-0"	16	24	4	3'-2"	51	19	4	5'-8"	72	2	7	5'-8"	23	2	6	9'-8"	29	18	3	2'-7"	17	267	2.74
8.0	2.5	12	4	8'-10"	71	4	4	7'-6"	20	28	4	3'-2"	59	23	4	5'-8"	87	2	7	5'-8"	23	2	6	9'-8"	29	18	3	2'-7"	17	306	3.22
8.5	2.5	12	4	9'-4"	75	4	4	8'-0"	21	28	4	3'-2"	59	23	4	5'-8"	87	2	7	5'-8"	23	2	6	9'-8"	29	18	3	2'-7"	17	311	3.37
10.0	2.5	12	4	10'-10"	87	4	4	9'-6"	25	32	4	3'-2"	68	27	4	5'-8"	102	2	7	5'-8"	23	2	6	9'-8"	29	18	3	2'-7"	17	351	3.84
10.5	2.5	12	4	11'-4"	91	4	4	10'-0"	27	32	4	3'-2"	68	27	4	5'-8"	102	2	7	5'-8"	23	2	6	9'-8"	29	18	3	2'-7"	17	357	4.00
4.0	3.0	12	4	4'-10"	39	4	4	3'-6"	9	20	4	3'-8"	49	15	4	5'-8"	57	2	7	5'-8"	23	2	6	9'-8"	29	18	3	2'-7"	17	223	2.16
4.5	3.5	14	4	5'-4"	50	4	4	4'-0"	11	20	4	4'-2"	56	17	4	5'-8"	64	2	7	5'-8"	23	2	6	9'-8"	29	18	3	2'-7"	17	250	2.54
5.5	3.5	14	4	6'-4"	59	4	4	5'-0"	13	22	4	4'-2"	61	19	4	5'-8"	72	2	7	5'-8"	23	2	6	9'-8"	29	18	3	2'-7"	17	274	2.89
7.5	4.0	16	4	8'-4"	89	4	4	7'-0"	19	26	4	4'-8"	81	25	4	5'-8"	95	2	7	5'-8"	23	2	6	9'-8"	29	18	3	2'-7"	17	353	3.87
10.0	5.0	18	4	10'-10"	130	4	4	9'-6"	25	32	4	5'-8"	121	33	4	5'-8"	125	2	7	5'-8"	23	2	6	9'-8"	29	18	3	2'-7"	17	470	5.42
7.5	5.0	18	4	8'-4"	100	4	4	7'-0"	19	26	4	5'-8"	96	29	4	5'-8"	110	2	7	5'-8"	23	2	6	9'-8"	29	18	3	2'-7"	17	394	4.09

*Does not include invert shaping

NOTE: On inlets with entensions, Bars F & G shall run continuous thru the inlet and extensions.

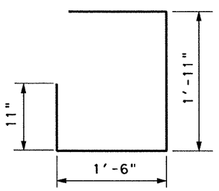

BARS E

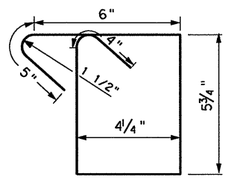

BARS H

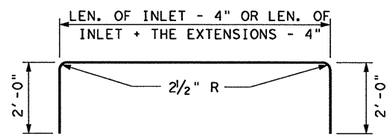

BARS G

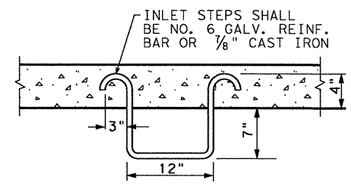

DETAIL OF INLET STEPS

CONCRETE TO BE DEDUCTED FOR PIPES	
Pipe Size	Conc. C.Y.
15"	0.04
18"	0.05
21"	0.07
24"	0.09
27"	0.11
30"	0.14
33"	0.17
36"	0.19
42"	0.26
48"	0.34
54"	0.43

NOTE:

WHERE TWO OR MORE EXTENSIONS ARE TOGETHER, BARS "D" SHALL RUN CONTINUOUS THRU THE EXTENSIONS.
* DOES NOT INCLUDE QUANTITY FOR INVERT SHAPING.

REINFORCING STEEL AND CONCRETE IN EXTENSIONS

5'-0" EXTN. NO.	BARS D				BARS E				BARS F				BARS G				BARS H				Reinf. Steel	CL A Conc.
	NO.	SIZE	LENGTH	WEIGHT	NO.	SIZE	LENGTH	WEIGHT	NO.	SIZE	*LENGT	WEIGHT	NO.	SIZE	*LENGT	WEIGHT	NO.	SIZE	LENGTH	WEIGHT	LBS	C.Y.
1	8	4	5'-8"	30	6	4	5'-4"	21	2	7	5'-6"	23	2	6	5'-6"	17	16	3	2'-7"	6	97	1.64
2	8	4	11'-2"	60	12	4	5'-4"	43	2	7	11'-0"	45	2	6	11'-0"	33	33	3	2'-7"	32	213	1.80
3	Reinf. Steel is as shown for 1 Extension and as shown for 2 Extensions																					

** Length is to be added to the length as shown in the above table for Typ. I - 5'-0" Inlets*

GENERAL NOTES:

REINFORCING STEEL AND CONCRETE TABLES SHOWN
ABOVE ARE FOR INFORMATION ONLY
THESE TABLES ARE TO BE USED WITH INLET TYPE I, WITH 3" & 5"
NORMAL CURB HEIGHT AND 8" CONCRETE PAVEMENT.

STATE OF TEXAS
NICHOLAS VON SPENCER
93702
LICENSED
PROFESSIONAL ENGINEER

Nicholas V. Spencer, P.E. 4-7-11
Signature of Registrant & Date

REVISED ON 9/10/08
NOT TO SCALE

SHEET 2 OF 2

Texas Department of Transportation
Dallas District

CURB INLET TYPE I (MOD)

CI(TY I)-08 (MOD)

FILE: CI(TY I)-08	DN: TxDOT	CK: TxDOT	DW:		CK:	
© TxDOT	DISTRICT	FEDERAL AID PROJECT			SHEET	
	DAL	(SEE TITLE SHEET)			348	
	COUNTY	CONTROL	SECT	JOB	HIGHWAY	
	COLLIN	0091	04	055	SH 289	

DISCLAIMER:
The use of this standard is governed by the "Texas Engineering Practice Act". No warranty of any kind is made by TxDOT for any purpose whatsoever. TxDOT assumes no responsibility for the conversion of this standard to other formats or for incorrect results or damages resulting from its use.

LEVELS DISPLAYED

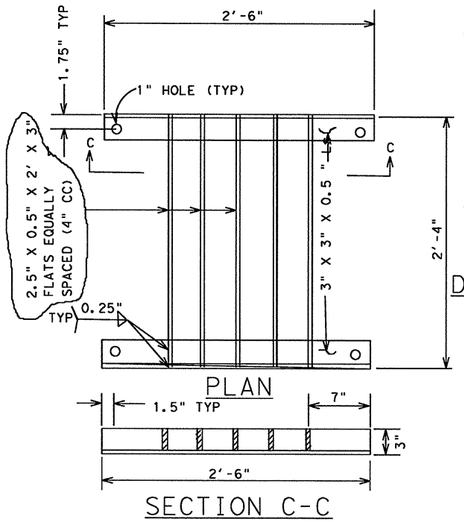

GRATE DETAILS TYPE C

SC: 1.5" = 1'-0"

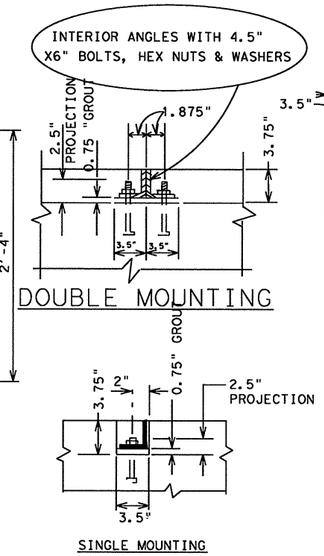

GRATE MOUNTING DETAILS

SCALE: 1.5" = 1-0"

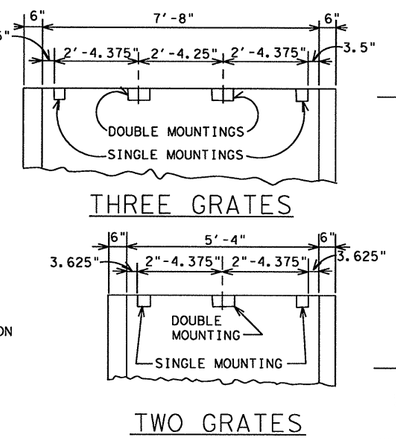

MULTIPLE GRATE INLET DETAILS

SCALE: 1/2" = 1'-0"

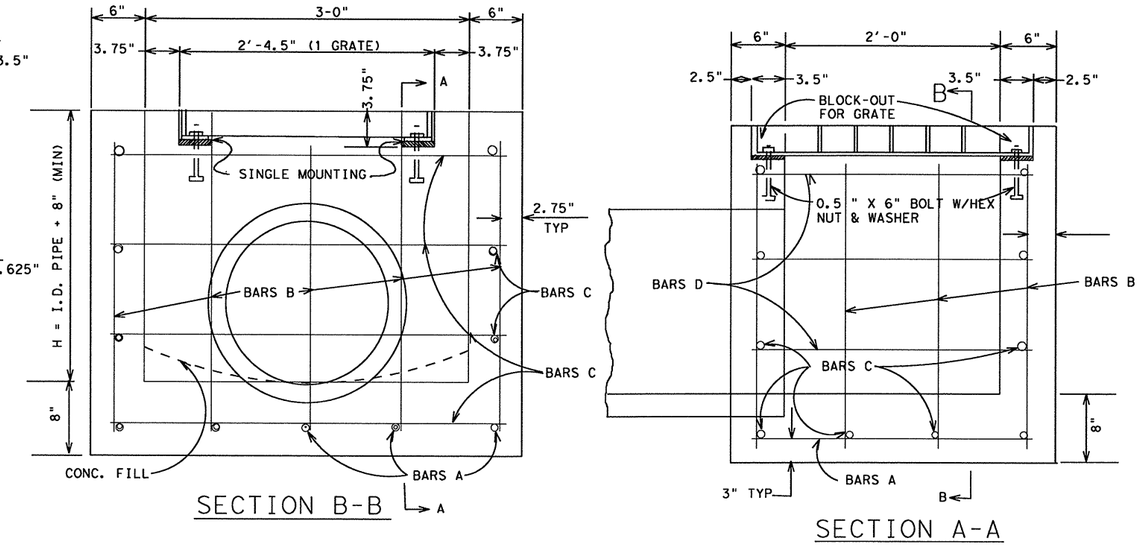

INLET DETAILS TYPE "C"

SCALE : 1.5" = 1'-0"

PIPE SIZE	CONC. C.Y.
15"	0.04
18"	0.05
21"	0.07
24"	0.09
27"	0.11
30"	0.14
33"	0.17
36"	0.20
39"	0.23
42"	0.26
48"	0.34

CONCRETE TO BE DEDUCTED FOR PIPES

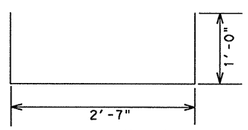

BAR "A"

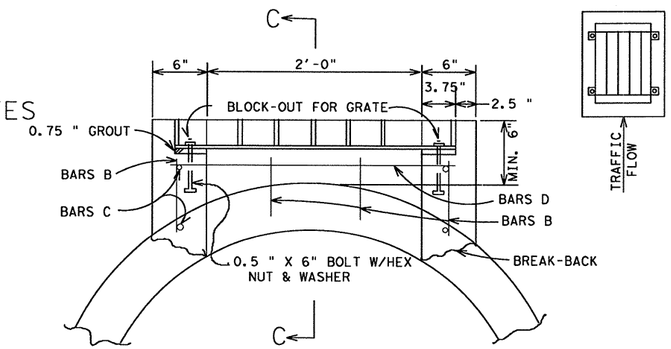

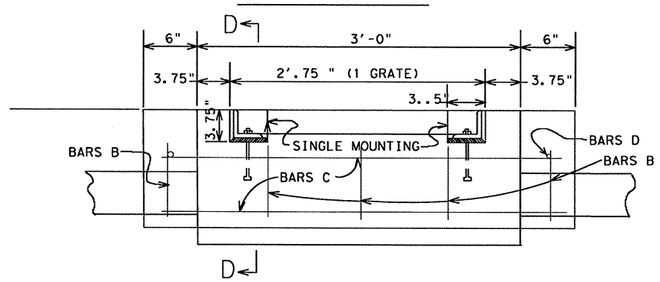

INLET DETAILS TYPE "G"

FOR USE WITH PIPES GREATER THAN 30" DIAMETER

GENERAL NOTES

1. EXPOSED EDGES SHALL BE CHAMFERED 0.75".
2. ALL CONCRETE SHALL BE CLASS "A".
3. ALL DIMENSIONS TO BE REINFORCING STEEL ARE TO CENTERS OF BARS.
4. IN AREAS OF CONFLICT BETWEEN REINFORCING STEEL, BLOCKOUTS, PIPES, ANCHOR BOLTS OR OTHER REINFORCING STEEL, THE REINFORCEMENT SHALL BE BENT OR ADJUSTED TO CLEAR AS DIRECTED BY THE ENGINEER.
5. IF POSSIBLE HORIZONTAL GRATE INLET SHOULD BE ORIENTED SUCH THAT BOTH TRAFFIC AND DITCH WATER APPROACH PARRALLEL TO BARS ON GRATE. IF THIS IS NOT POSSIBLE ORIENTATION SHOULD FAVOR TRAFFIC FLOW WHERE PIPE SIZES PERMIT.
6. STRUCTURAL STEEL FOR GRATES SHALL CONFORM TO THE REQUIREMENTS OF ASTM DESIGNATION A-36 OR AISI DESIGNATION m1010-m1020. PAYMENT FOR GRATES SHALL BE MADE UNDER THE BID ITEM "GRATE (TY C)."
   QUANTITIES FOR CONCRETE & STEEL ARE FOR CONTRACTOR'S INFORMATION ONLY.
7. PAYMENT FOR INLETS SHALL BE MADE UNDER THE BID ITEM "INLETS (COMP) (TY C-1 GRATE), (TY C-2 GRATE), (TY C=3 GRATE) OR (TY G-1 GRATE)."
8. EXISTING BARS EXPOSED BY BREAK -BACK SHALL BE CLEANED AND BENT INTO POSITION TO PROVIDE A TIE TO THE NEW CONCRETE EXTENSION FOR TYPE "G" INLET.

BILL OF REINFORCING STEEL FOR TYPE "C" INLETS

	H	BARS A 12" C.C. NO.	LENGTH	SIZE	WT.	BARS B 12" C.C. NO.	LENGTH	SIZE	WT.	BARS C 12" C.C. NO.	LENGTH	SIZE	WT.	BARS D 12" C.C. NO.	LENGTH	SIZE	WT.	REINF. STEEL LB.	CL "A" CONC. C.Y.	GRATE
1 GRATE	2'-6"	5	4'-7"	4	15	14	2'-8"	4	25	10	3'-8"	4	24	6	2"-8"	4	11	75	0.85	95#
	3'-0"	5			15	14	3'-2"		30	10	3'-8"		24	6			11	80	0.96	
	3'-6"	5			15	14	3'-8"		34	12	3'-8"		29	8			14	92	1.07	
	4'-0"	5			15	14	4'-2"		39	12	3'-8"		29	8			14	97	1.18	
	4'-6"	5			15	14	4'-8"		44	14	3'-8"		34	10			18	111	1.29	
	5'-0"	5			15	14	5'-2"		48	14	3'-8"		34	10			18	115	1.40	
2-GRATE	3'-0"	7			21	18	3"-2"		38	10	6'-0"		40	6			11	110	1.38	190#
	3'-6"	7			21	18	3'-8"		44	12	6'-0"		48	8			14	127	1.53	
	4'-0"	7			21	18	4'-2"		50	12	6'-0"		48	8			14	133	1.68	
	4'-6"	7			21	18	4'-8"		56	14	6'-0"		56	10			18	151	1.83	
	5'-0"	7			21	18	5'-2"		62	14	6'-0"		56	10			18	157	1.98	
	5'-6"	7			21	18	5'-8"		68	16	6'-0"		64	12			21	174	2.13	
3-GRATE	4'-0"	10			31	24	4'-2"		67	12	8'-4"		67	8			14	178	2.22	285#
	4'-6"	10			31	24	4'-8"		75	14	8'-4"		78	10			18	202	2.41	
	5'-0"	10			31	24	5'-2"		83	14	8'-4"		78	10			18	210	2.60	
	5'-6"	10			31	24	5'-8"		91	16	8'-4"		89	12			21	232	2.79	
	6'-0"	10			31	24	6'-2"		99	16	8'-4"		89	12			21	240	2.98	
	6'-6"	10	4'-7"	4	31	24	6'-8"	4	107	16	8'-4"	4	100	14	2"-8"	4	25	263	3.17	

* DOES NOT INCLUDE QUANTITY FOR SHAPING OR DEDUCTION FOR PIPES

DROP INLET TYPE C & G DETAILS

TXDOT

DALLAS DISTRICT STANDARD

STD 7

REVISED ON 9/10/08

FED. RD. DIV. NO.	STATE PROJECT NO.		SHEET NO.
6	(SEE TITLE SHEET)		349
STATE	STATE DIST. NO.	COUNTY	
TEXAS	18	COLLIN	
CONTROL	SECTION	JOB	HIGHWAY NO.
0091	04	055	SH 289

$$$$date$$$$

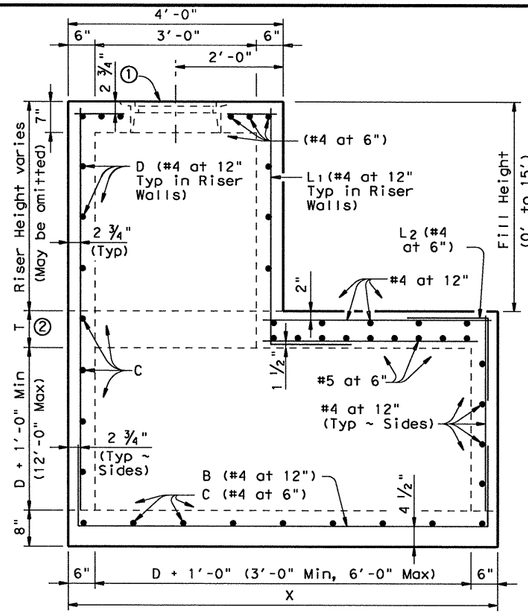

ELEVATION

D = Maximum inside diameter of any Pipe entering the side shown or the opposite side

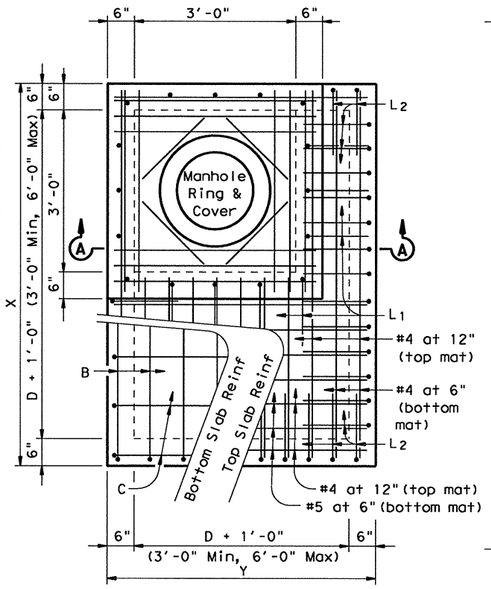

PLAN

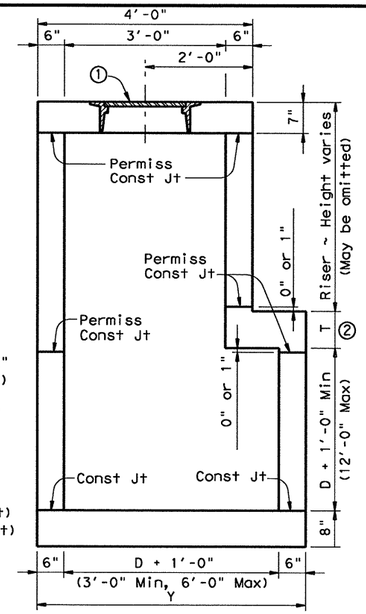

SECTION A-A

MANHOLE WITH CAST-IN-PLACE RISER

① See Ring and Cover Details

② For Fill Height less than or equal to 10', T=8". For Fill Height between 10' and 15', T=10".

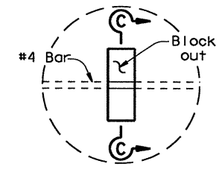

DETAIL "A"

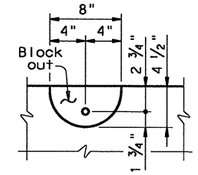

SECTION C-C

LIFTING CATCH

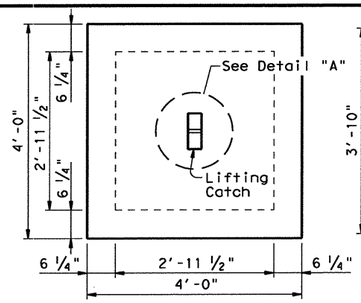

PLAN

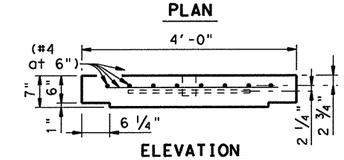

ELEVATION

CAST-IN-PLACE RISER COVER

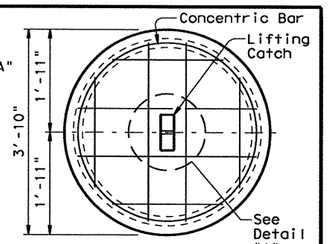

PLAN

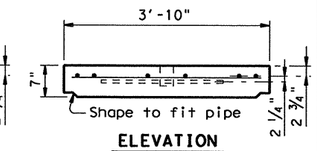

ELEVATION

CONCRETE PIPE RISER COVER

OPTIONAL PRECAST CONCRETE LIFT-OFF COVERS

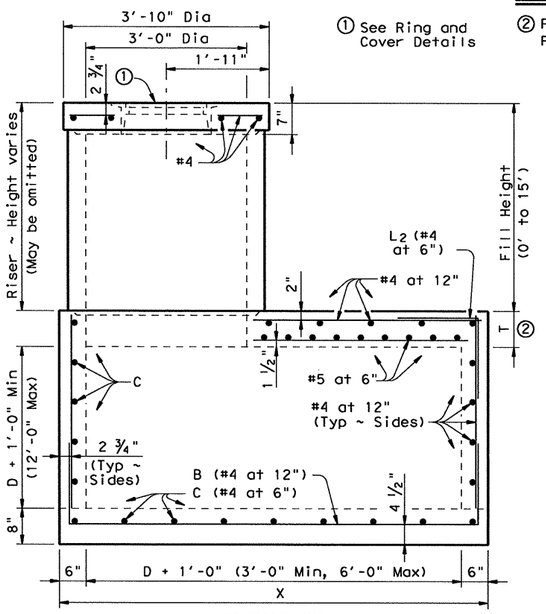

ELEVATION

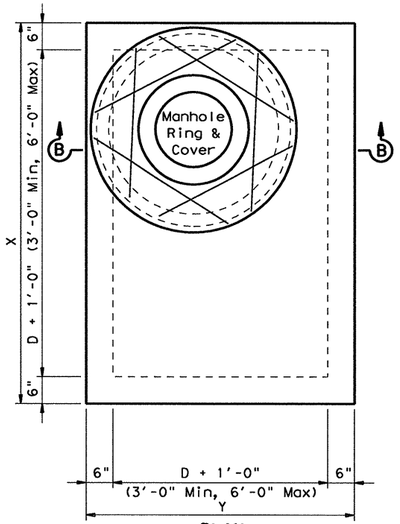

PLAN

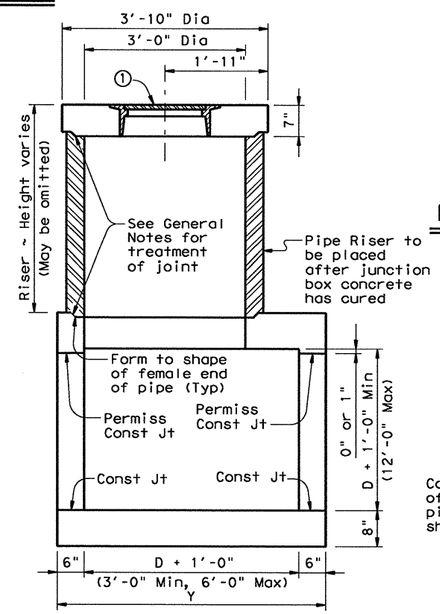

SECTION B-B

OPTIONAL MANHOLE WITH CONCRETE PIPE RISER

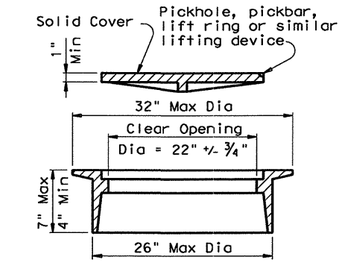

RING AND COVER DETAILS

Approximate Weight = 245 lb

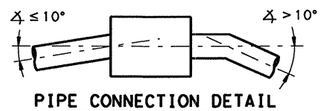

PIPE CONNECTION DETAIL

Connecting pipes should enter within 10° of normal to inlet wall. If necessary, pipe elbow or curved approach alignment should be used to stay within this limit.

GENERAL NOTES:

Unless otherwise shown in the plans, payment will be made for each manhole of the Type M.

When approved, precast inlets with equivalent structural capacity may be furnished. Sealed engineering calculations and drawings shall be submitted for approval prior to construction.

Shop drawings will not be required.

In areas of conflict between reinforcing steel, blockouts, pipes, anchor bolts or other reinforcing steel, the reinforcement shall be bent or adjusted to clear as directed by the Engineer.

The riser may be constructed of reinforced concrete as shown or of Reinforced Concrete Pipe, Class III, in accordance with ASTM Designation C-76. If pipe is used, joints shall conform to the Item "Reinforced Concrete Pipe Culverts". Precast Concrete Lift-Off Cover may be substituted for Ring and Cover.

The riser, either cast-in-place or concrete pipe, may be located in any corner.

All reinforcing steel shall be #4 unless otherwise noted.

Pipes may enter any or all walls. The maximum size of pipe that can be accommodated is 60". More than one pipe may enter a side, subject to the maximum box dimension shown. The clear distance between adjacent pipes should be 9" minimum.

Ring and cover shall conform to the requirements of AASHTO M306, "Standard Specification for Drainage Structure Castings". Materials shall conform to ASTM A48, Class 35B for gray iron castings or ASTM A536, Grade 65-45-12 for ductile iron castings. Aluminum alloy castings shall not be permitted.

All concrete shall be Class "A" (f'c = 3000 psi).

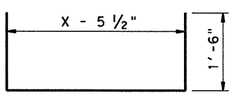

BARS B

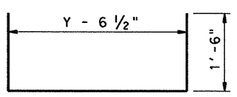

BARS C

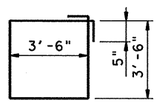

BARS D

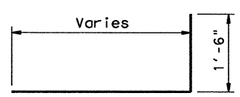

BARS L1

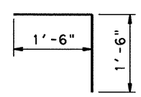

BARS L2

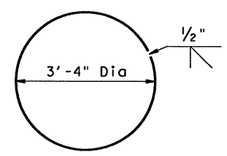

CONCENTRIC BAR

Texas Department of Transportation
Bridge Division

MANHOLE TYPE M
(JUNCTION BOX WITH ACCESS)
15' MAX FILL

MH-M

FILE: mh-mstde.dgn	DN: TxDOT	CK: TER	DW: MCB	CK: TER/GAF
©TxDOT February 2010	DISTRICT	FEDERAL AID PROJECT		SHEET
REVISIONS	18	(SEE TITLE SHEET)		350

COUNTY	CONTROL	SECT	JOB	HIGHWAY
COLLIN	0091	04	055	SH 289

DISCLAIMER:
The use of this standard is governed by the "Texas Engineering Practice Act". The warranty of any kind is made for the use of this standard only as prepared for TxDOT for the project where it is used. TxDOT assumes no responsibility for the conversion of this standard to other formats or for incorrect results or damages resulting from its use.

LEVELS | ACCY'D | ACC:

R-201104-01

BOX DATA

SECTION DIMENSIONS					Fill Height	M (Min)	REINFORCING (in²/ft) ②								Lift Weight (Tons) ①
S (ft)	H (ft)	T_T (in)	T_B (in)	T_S (in)	(ft)	(in)	A_{S1}	A_{S2}	A_{S3}	A_{S4}	A_{S5}	A_{S6}	A_{S7}	A_{S8}	
3	2	7	6	4	<2	-	0.17	0.25	0.16	0.10	0.17	0.17	0.17	0.14	3.3
3	2	4	4	4	2<3	31	0.13	0.19	0.18	0.10	-	-	-	-	2.4
3	2	4	4	4	3-5	31	0.10	0.11	0.12	0.10	-	-	-	-	2.4
3	2	4	4	4	10	31	0.10	0.10	0.10	0.10	-	-	-	-	2.4
3	2	4	4	4	15	31	0.10	0.13	0.13	0.10	-	-	-	-	2.4
3	2	4	4	4	20	31	0.11	0.17	0.17	0.10	-	-	-	-	2.4
3	2	4	4	4	25	31	0.14	0.21	0.21	0.10	-	-	-	-	2.4
3	2	4	4	4	30	31	0.17	0.25	0.25	0.10	-	-	-	-	2.4
3	2	4	4	4	35	31	0.20	0.29	0.30	0.10	-	-	-	-	2.4
3	3	7	6	4	<2	-	0.17	0.27	0.17	0.10	0.17	0.17	0.17	0.14	3.7
3	3	4	4	4	2<3	31	0.10	0.22	0.21	0.10	-	-	-	-	2.8
3	3	4	4	4	3-5	31	0.10	0.14	0.14	0.10	-	-	-	-	2.8
3	3	4	4	4	10	31	0.10	0.11	0.11	0.10	-	-	-	-	2.8
3	3	4	4	4	15	31	0.10	0.14	0.15	0.10	-	-	-	-	2.8
3	3	4	4	4	20	31	0.10	0.18	0.19	0.10	-	-	-	-	2.8
3	3	4	4	4	25	31	0.10	0.23	0.23	0.10	-	-	-	-	2.8
3	3	4	4	4	30	31	0.12	0.27	0.28	0.10	-	-	-	-	2.8
3	3	4	4	4	35	31	0.14	0.32	0.32	0.10	-	-	-	-	2.8

① For Box Length = 8'-0"

② A_{S1} thru A_{S4}, A_{S7} and A_{S8} are minimum required areas of reinforcement per linear foot of box length. A_{S6} and A_{S5} are minimum required areas of reinforcement per linear foot of box width.

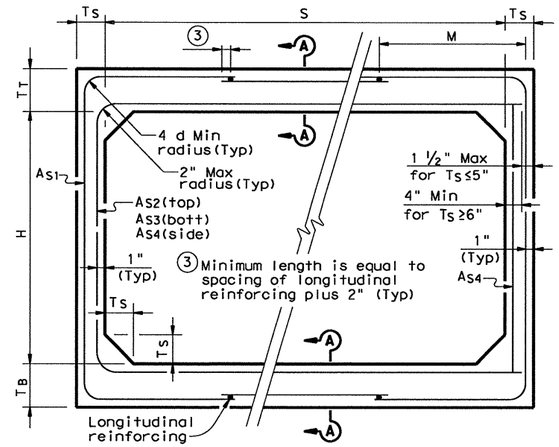

CORNER OPTION "A" CORNER OPTION "B"

FILL HEIGHT 2 FT AND GREATER

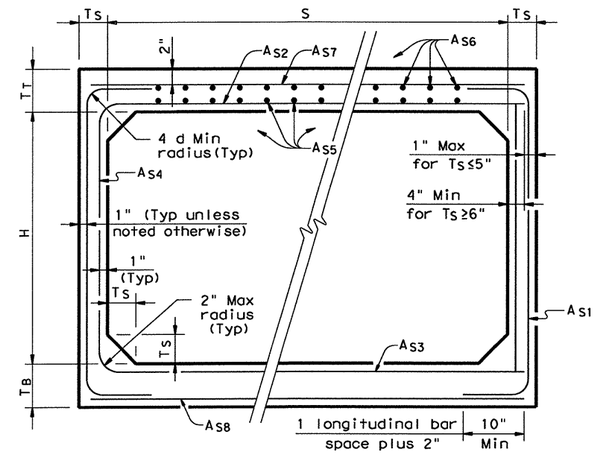

CORNER OPTION "A" CORNER OPTION "B"

FILL HEIGHT LESS THAN 2 FT

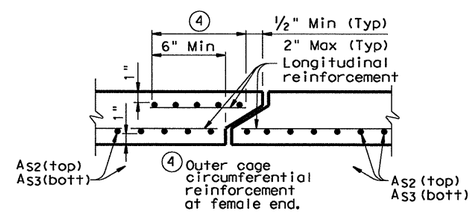

SECTION A-A

(TOP AND BOTTOM SLAB JOINT REINFORCEMENT)

GENERAL NOTES:

Designs shown conform to ASTM C1577.

Refer to ASTM C1577 for information or details not shown.

All concrete shall be Class "H" Concrete with a minimum compressive strength of 5,000 psi.

See SCP-MD standard sheet for miscellaneous details and notes not shown.

In lieu of furnishing the designs shown on this sheet, the contractor may furnish an alternate design that is equal to or exceeds the box design for the design fill height in the table. Shop plans for alternate designs shall be submitted in accordance with Item "Precast Concrete Structures".

HL93 LOADING

Texas Department of Transportation
Bridge Division

SINGLE BOX CULVERTS PRECAST

3'-0" SPAN

SCP-3

FILE: scp03ste.dgn	DN: GAF	CK: LMW	DW: BWH/TxDOT	CK: GAF
©TxDOT February 2010	DISTRICT	STATE PROJECT NO.		SHEET
REVISIONS	18	(SEE TITLE SHEET		351

COUNTY	CONTROL	SECT	JOB	HIGHWAY
COLLIN	0091	04	055	SH 289

DISCLAIMER:
The use of this standard is governed by the "Texas Engineering Practice Act". No warranty of any kind is made by TxDOT for any purpose whatsoever. TxDOT assumes no responsibility for the conversion of this standard to other formats or for incorrect results or damages resulting from its use.

LEVELS 1... ...ATED ACC:

R-201104-01

BILLS OF REINFORCING STEEL (For Box Length = 40 feet)

SECTION DIMENSIONS S	H	T	U	FILL HEIGHT	Bars B No.	Size	Spa	Length	Weight	Bars C No.	Size	Spa	Length	Weight	"X"	"Y"
3'-0"	2'-0"	7"	7"	30'	138	#4	7"	3'-11"	361	98	#4	10"	4'- 2"	273	2'- 5"	1'- 9"
3'-0"	3'-0"	7"	7"	30'	162	#4	6"	3'-11"	424	98	#4	10"	5'- 2"	338	3'- 5"	1'- 9"
4'-0"	2'-0"	7"	7"	30'	194	#4	5"	4'-11"	637	162	#4	6"	4'- 8"	505	2'- 5"	2'- 3"
4'-0"	3'-0"	7"	7"	30'	162	#5	6"	4'-11"	831	162	#4	6"	5'- 8"	613	3'- 5"	2'- 3"
4'-0"	4'-0"	7"	7"	30'	162	#5	6"	4'-11"	831	162	#4	6"	6'- 8"	721	4'- 5"	2'- 3"

SECTION DIMENSIONS S	H	T	U	Bars D No.	Size	Spa	Length	Weight	"Y"	"Z"	Bars E~#4 at 18" Max No.	Length	Wt	Bars F_1 ~#4 No.	Spa	Length	Wt	Bars F_2~#4 at 18" Max No.	Length	Wt	Bars H 4~#4 Length	Wt	Bars K No.	Wt
3'-0"	2'-0"	7"	7"	98	#4	10"	3'-11"	256	1'- 9"	2'- 2"	56	2'-0"	75	3	13"	39'-9"	80	19	39'-9"	505	3'-11"	10	10	28
3'-0"	3'-0"	7"	7"	98	#4	10"	3'-11"	256	1'- 9"	2'- 2"	56	3'-0"	112	3	12"	39'-9"	80	23	39'-9"	611	3'-11"	10	10	28
4'-0"	2'-0"	7"	7"	162	#4	6"	4'- 5"	478	2'- 3"	2'- 2"	56	2'-0"	75	5	10"	39'-9"	133	21	39'-9"	558	4'-11"	13	12	34
4'-0"	3'-0"	7"	7"	162	#4	6"	4'- 5"	478	2'- 3"	2'- 2"	56	3'-0"	112	6	8"	39'-9"	159	25	39'-9"	664	4'-11"	13	12	34
4'-0"	4'-0"	7"	7"	162	#4	6"	4'- 5"	478	2'- 3"	2'- 2"	56	4'-0"	150	6	8"	39'-9"	159	25	39'-9"	664	4'-11"	13	12	34

QUANTITIES

Per foot of Barrel Conc (CY)	Reinf (Lb)	Curb Conc (CY)	Reinf (Lb)	Total Conc (CY)	Reinf (Lb)
0.266	38.8	0.3	38	10.9	1,588
0.310	45.5	0.3	38	12.7	1,859
0.310	59.7	0.4	47	12.8	2,433
0.353	71.4	0.4	47	14.5	2,904
0.396	75.1	0.4	47	16.2	3,050

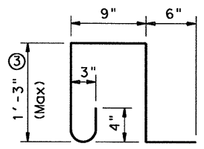

BARS K ~ #4
(Spa = 1'-0" Max)
(Length = 4'-3")

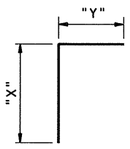

BARS C

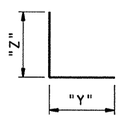

BARS D

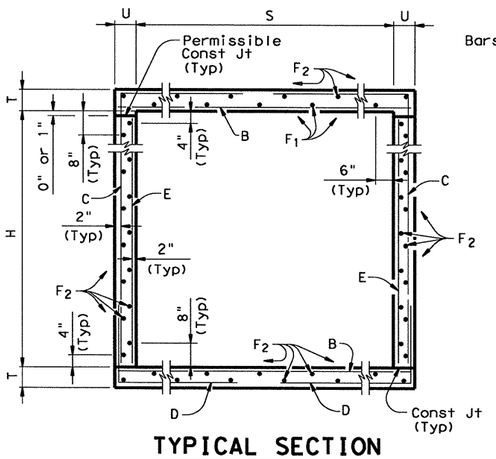

TYPICAL SECTION

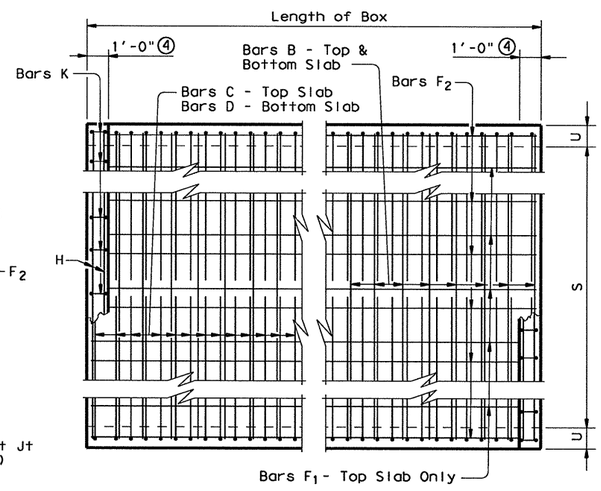

PLAN OF REINF STEEL

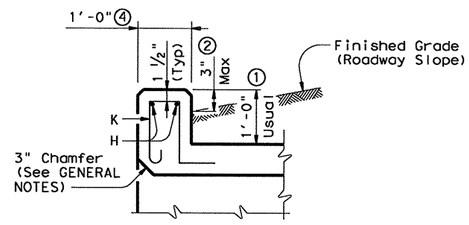

SECTION THRU CURB

① 0" min to 5'-0" max. Estimated curb heights are shown elsewhere in the plans. For structures with pedestrian rail, bicycle rail or curbs taller than 1'-0", refer to ECD standard. For structures with T6 bridge rail, refer to T6-CM standard. For structures with traffic rail, other than T6, refer to RAC standard.

② For vehicle safety, the following requirements must be met:
- For structures without bridge rail, curbs shall project no more than 3" above finished grade.
- For structures with bridge rail, curbs shall be flush with finished grade.

Curb heights shall be reduced, if necessary, to meet the above requirements. No changes will be made in quantities and no additional compensation will be allowed for this work.

③ For curbs less than 1'-0" high, tilt bars K or reduce bar height as necessary to maintain cover. For curbs less than 3" high, bars K may be omitted.

④ 1'-0" typical. 2'-0" when RAC standard is referred to elsewhere in the plans.

GENERAL NOTES:

Designed according to AASHTO LRFD Specifications.
Designed to the maximum fill heights shown.
All reinforcing steel shall be Grade 60.
All concrete shall be Class "C" with these exceptions: use Class "S" for top slabs of culverts with overlay, with 1-to-2 course surface treatment, or with the top slab as the final riding surface.
Class "C" concrete shall have a minimum compressive strength of 3,600 psi. Class "S" concrete shall have a minimum compressive strength of 4,000 psi.
The use of permanent forms is not allowed.
Reinforcing bars shall be adjusted to provide a minimum of 1 ¼ inches clear cover.
The bottom edge of the top slab shall be chamfered 3 inches at the entrance.
Construction joints shown at the flow line may be raised a maximum of 6 inches at the Contractor's option. If this option is used, Bars E may be cut off or raised, and Bars C and D may be reversed.
See Standard SCC-MD for skewed ends, angle sections and lengthening details.

HL93 LOADING

Texas Department of Transportation
Bridge Division

SINGLE BOX CULVERTS CAST-IN-PLACE 0' TO 30' FILL

SCC-3 & 4

FILE: scc34ste.dgn	DN: GAF	CK: LMW	DW: BWH/TxDOT	CK: GAF
©TxDOT February 2010	DISTRICT	FEDERAL AID PROJECT		SHEET
REVISIONS	18	(SEE TITLE SHEET		352

COUNTY	CONTROL	SECT	JOB	HIGHWAY
COLLIN	0091	04	055	SH 289

DISCLAIMER:
The use of this standard is governed by the "Texas Engineering Practice Act". No warranty of any kind is made by TxDOT for any purpose whatsoever. TxDOT assumes no responsibility for the conversion of this standard to other formats or for incorrect results or damages resulting from its use.

ACC:
AXED
LEVELS
1

R-201104-01

BOX DATA

SECTION DIMENSIONS S (ft)	H (ft)	T_T (in)	T_B (in)	T_S (in)	Fill Height (ft)	M (Min) (in)	REINFORCING (in²/ft) ② A_{S1}	A_{S2}	A_{S3}	A_{S4}	A_{S5}	A_{S6}	A_{S7}	A_{S8}	Lift Weight (Tons) ①
6	3	8	7	7	<2	-	0.20	0.31	0.22	0.17	0.19	0.19	0.19	0.17	7.9
6	3	7	7	7	2<3	43	0.21	0.24	0.19	0.17	-	-	-	-	7.5
6	3	7	7	7	3-5	39	0.17	0.18	0.17	0.17	-	-	-	-	7.5
6	3	7	7	7	10	39	0.17	0.18	0.19	0.17	-	-	-	-	7.5
6	3	7	7	7	15	38	0.22	0.24	0.24	0.17	-	-	-	-	7.5
6	3	7	7	7	20	38	0.28	0.31	0.31	0.17	-	-	-	-	7.5
6	3	7	7	7	25	38	0.35	0.38	0.39	0.17	-	-	-	-	7.5
6	3	7	7	7	30	38	0.42	0.46	0.46	0.17	-	-	-	-	7.5
6	4	8	7	7	<2	-	0.19	0.34	0.25	0.17	0.19	0.19	0.19	0.17	8.6
6	4	7	7	7	2<3	43	0.19	0.27	0.21	0.17	-	-	-	-	8.2
6	4	7	7	7	3-5	39	0.17	0.21	0.19	0.17	-	-	-	-	8.2
6	4	7	7	7	10	39	0.17	0.20	0.21	0.17	-	-	-	-	8.2
6	4	7	7	7	15	38	0.18	0.27	0.27	0.17	-	-	-	-	8.2
6	4	7	7	7	20	38	0.24	0.34	0.35	0.17	-	-	-	-	8.2
6	4	7	7	7	25	38	0.29	0.43	0.42	0.17	-	-	-	-	8.2
6	4	7	7	7	30	38	0.35	0.51	0.52	0.17	-	-	-	-	8.2
6	5	8	7	7	<2	-	0.19	0.37	0.28	0.17	0.19	0.19	0.19	0.17	9.3
6	5	7	7	7	2<3	43	0.17	0.30	0.24	0.17	-	-	-	-	8.9
6	5	7	7	7	3-5	43	0.17	0.23	0.21	0.17	-	-	-	-	8.9
6	5	7	7	7	10	39	0.17	0.22	0.23	0.17	-	-	-	-	8.9
6	5	7	7	7	15	38	0.17	0.28	0.29	0.17	-	-	-	-	8.9
6	5	7	7	7	20	38	0.20	0.37	0.38	0.17	-	-	-	-	8.9
6	5	7	7	7	25	38	0.25	0.45	0.46	0.17	-	-	-	-	8.9
6	5	7	7	7	30	38	0.30	0.54	0.55	0.17	-	-	-	-	8.9
6	6	8	7	7	<2	-	0.19	0.38	0.30	0.17	0.19	0.19	0.19	0.17	10.0
6	6	7	7	7	2<3	52	0.17	0.32	0.26	0.17	-	-	-	-	9.6
6	6	7	7	7	3-5	52	0.17	0.24	0.22	0.17	-	-	-	-	9.6
6	6	7	7	7	10	43	0.17	0.23	0.24	0.17	-	-	-	-	9.6
6	6	7	7	7	15	39	0.17	0.29	0.31	0.17	-	-	-	-	9.6
6	6	7	7	7	20	39	0.18	0.38	0.39	0.17	-	-	-	-	9.6
6	6	7	7	7	25	38	0.23	0.46	0.48	0.17	-	-	-	-	9.6
6	6	7	7	7	30	38	0.27	0.55	0.57	0.17	-	-	-	-	9.6

① For Box Length = 8'-0"

② A_{S1} thru A_{S4}, A_{S7} and A_{S8} are minimum required areas of reinforcement per linear foot of box length. A_{S6} and A_{S5} are minimum required areas of reinforcement per linear foot of box width.

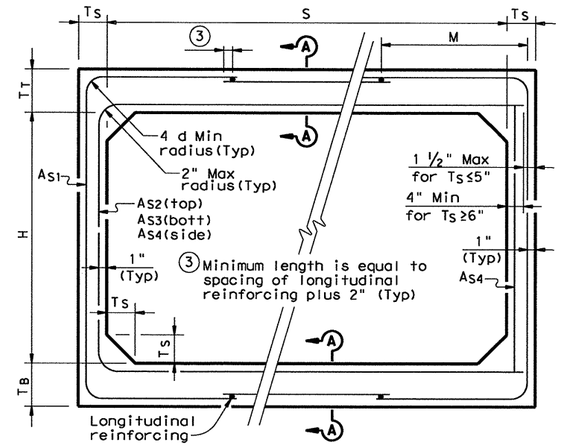

CORNER OPTION "A" CORNER OPTION "B"

FILL HEIGHT 2 FT AND GREATER

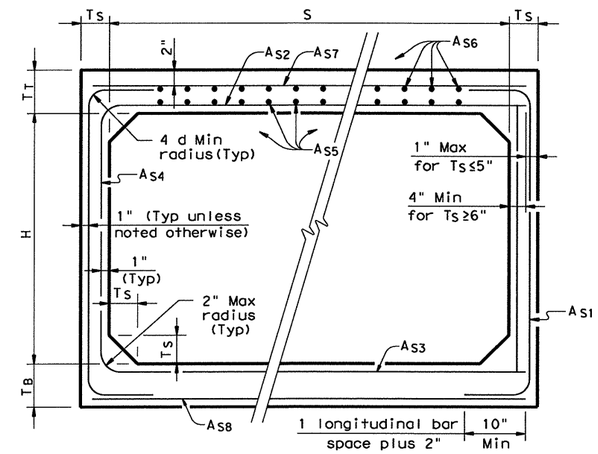

CORNER OPTION "A" CORNER OPTION "B"

FILL HEIGHT LESS THAN 2 FT

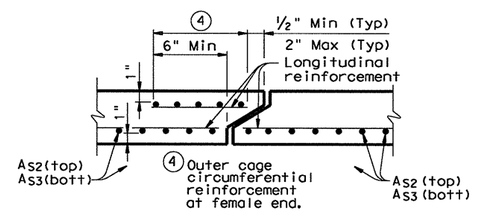

SECTION A-A

(TOP AND BOTTOM SLAB JOINT REINFORCEMENT)

GENERAL NOTES:

Designs shown conform to ASTM C1577.

Refer to ASTM C1577 for information or details not shown.

All concrete shall be Class "H" Concrete with a minimum compressive strength of 5,000 psi.

See SCP-MD standard sheet for miscellaneous details and notes not shown.

In lieu of furnishing the designs shown on this sheet, the contractor may furnish an alternate design that is equal to or exceeds the box design for the design fill height in the table. Shop plans for alternate designs shall be submitted in accordance with Item "Precast Concrete Structures".

HL93 LOADING

Texas Department of Transportation
Bridge Division

SINGLE BOX CULVERTS PRECAST
6'-0" SPAN

SCP-6

FILE: scp06ste.dgn	DN: GAF	CK: LMW	DW: BWH/TxDOT	CK: GAF
©TxDOT February 2010	DISTRICT	FEDERAL AID PROJECT		SHEET
REVISIONS	18	(SEE TITLE SHEET		353

COUNTY	CONTROL	SECT	JOB	HIGHWAY
COLLIN	0091	04	055	SH 289

DISCLAIMER:
The use of this standard is governed by the "Texas Engineering Practice Act". No warranty of any kind is made by TxDOT for any purpose whatsoever. TxDOT assumes no responsibility for the conversion of this standard to other formats or for incorrect results or damages resulting from its use.

LEVELS v... ATED ACC:

R-201104-01

BILLS OF REINFORCING STEEL (For Box Length = 40 feet) / QUANTITIES

SECTION DIMENSIONS S	H	T	U	FILL HEIGHT ⑤	Bars B No.	Size	Spa	Length	Weight	Bars C No.	Size	Spa	Length	Weight	"X"	"Y"
5'-0"	2'-0"	7"	7"	26'	194	#5	5"	5'-11"	1,197	162	#5	6"	5'- 2"	873	2'- 5"	2'- 9"
5'-0"	2'-0"	8"	7"	30'	194	#5	5"	5'-11"	1,197	194	#4	5"	5'- 0"	648	2'- 6"	2'- 6"
5'-0"	3'-0"	7"	7"	26'	194	#5	5"	5'-11"	1,197	194	#4	5"	5'-11"	767	3'- 5"	2'- 6"
5'-0"	3'-0"	8"	7"	30'	194	#5	5"	5'-11"	1,197	194	#4	5"	6'- 0"	778	3'- 6"	2'- 6"
5'-0"	4'-0"	7"	7"	26'	194	#5	5"	5'-11"	1,197	194	#4	5"	6'-11"	896	4'- 5"	2'- 6"
5'-0"	4'-0"	8"	7"	30'	194	#5	5"	5'-11"	1,197	194	#4	5"	7'- 0"	907	4'- 6"	2'- 6"
5'-0"	5'-0"	7"	7"	26'	194	#5	5"	5'-11"	1,197	194	#4	5"	7'-11"	1,026	5'- 5"	2'- 6"
5'-0"	5'-0"	8"	7"	30'	194	#5	5"	5'-11"	1,197	194	#4	5"	8'- 0"	1,037	5'- 6"	2'- 6"
6'-0"	3'-0"	7"	7"	20'	194	#5	5"	6'-11"	1,400	162	#5	6"	6'- 6"	1,098	3'- 5"	3'- 1"
6'-0"	3'-0"	8"	7"	26'	162	#6	6"	6'-11"	1,683	162	#5	6"	6'- 7"	1,112	3'- 6"	3'- 1"
6'-0"	3'-0"	9"	8"	30'	162	#6	6"	7'- 1"	1,724	162	#5	6"	6'- 8"	1,126	3'- 7"	3'- 1"
6'-0"	4'-0"	7"	7"	20'	194	#5	5"	6'-11"	1,400	194	#4	5"	7'- 3"	940	4'- 5"	2'-10"
6'-0"	4'-0"	8"	7"	26'	194	#6	5"	6'-11"	2,015	162	#5	6"	7'- 7"	1,281	4'- 6"	3'- 1"
6'-0"	4'-0"	9"	8"	30'	162	#6	6"	7'- 1"	1,724	162	#5	6"	7'- 8"	1,295	4'- 7"	3'- 1"
6'-0"	5'-0"	7"	7"	20'	194	#5	5"	6'-11"	1,400	194	#4	5"	8'- 3"	1,069	5'- 5"	2'-10"
6'-0"	5'-0"	8"	7"	26'	194	#6	5"	6'-11"	2,015	162	#5	6"	8'- 7"	1,450	5'- 6"	3'- 1"
6'-0"	5'-0"	9"	8"	30'	194	#6	5"	7'- 1"	2,064	162	#5	6"	8'- 8"	1,464	5'- 7"	3'- 1"
6'-0"	6'-0"	7"	7"	20'	194	#5	5"	6'-11"	1,400	194	#4	5"	9'- 3"	1,199	6'- 5"	2'-10"
6'-0"	6'-0"	8"	7"	26'	194	#6	5"	6'-11"	2,015	162	#5	6"	9'- 7"	1,619	6'- 6"	3'- 1"
6'-0"	6'-0"	9"	8"	30'	194	#6	5"	7'- 1"	2,064	162	#5	6"	9'- 8"	1,633	6'- 7"	3'- 1"

S	H	Bars D No.	Size	Spa	Length	Weight	"Y"	"Z"	Bars E~#4 at 18" Max No.	Length	Wt	Bars F1~#4 No.	Spa	Length	Wt	Bars F2~#4 at 18" Max No.	Length	Wt	Bars H 4~#4 Length	Wt	Bars K No.	Wt	Per foot of Barrel Conc (CY)	Reinf (Lb)	Curb Conc (CY)	Reinf (Lb)	Total Conc (CY)	Reinf (Lb)
5'-0"	2'-0"	162	#5	6"	5'- 4"	901	2'- 9"	2'- 7"	56	2'-0"	75	8	7"	39'-9"	212	22	39'-9"	584	5'-11"	16	14	40	0.353	96.1	0.5	56	14.6	3,898
5'-0"	2'-0"	194	#4	5"	4'- 9"	616	2'- 6"	2'- 3"	56	2'-0"	75	4	18"	39'-9"	106	22	39'-9"	584	5'-11"	16	14	40	0.391	80.7	0.5	56	16.1	3,282
5'-0"	3'-0"	194	#4	5"	4'- 8"	605	2'- 6"	2'- 2"	56	3'-0"	112	8	7"	39'-9"	212	26	39'-9"	690	5'-11"	16	14	40	0.396	89.6	0.5	56	16.3	3,639
5'-0"	3'-0"	194	#4	5"	4'- 9"	616	2'- 6"	2'- 3"	56	3'-0"	112	4	18"	39'-9"	106	26	39'-9"	690	5'-11"	16	14	40	0.434	87.5	0.5	56	17.9	3,555
5'-0"	4'-0"	194	#4	5"	4'- 8"	605	2'- 6"	2'- 2"	56	4'-0"	150	8	7"	39'-9"	212	26	39'-9"	690	5'-11"	16	14	40	0.439	93.8	0.5	56	18.1	3,806
5'-0"	4'-0"	194	#4	5"	4'- 9"	616	2'- 6"	2'- 3"	56	4'-0"	150	4	18"	39'-9"	106	26	39'-9"	690	5'-11"	16	14	40	0.477	91.7	0.5	56	19.6	3,722
5'-0"	5'-0"	194	#4	5"	4'- 8"	605	2'- 6"	2'- 2"	56	5'-0"	187	8	7"	39'-9"	212	30	39'-9"	797	5'-11"	16	14	40	0.483	100.6	0.5	56	19.8	4,080
5'-0"	5'-0"	194	#4	5"	4'- 9"	616	2'- 6"	2'- 3"	56	5'-0"	187	4	18"	39'-9"	106	30	39'-9"	797	5'-11"	16	14	40	0.521	98.5	0.5	56	21.3	3,996
6'-0"	3'-0"	162	#5	6"	5'- 8"	957	3'- 1"	2'- 7"	56	3'-0"	112	10	7"	39'-9"	266	29	39'-9"	770	6'-11"	18	16	45	0.439	115.1	0.5	63	18.1	4,666
6'-0"	3'-0"	162	#5	6"	5'- 9"	972	3'- 1"	2'- 8"	56	3'-0"	112	5	18"	39'-9"	133	29	39'-9"	770	6'-11"	18	16	45	0.484	119.6	0.5	63	19.9	4,845
6'-0"	3'-0"	162	#5	6"	5'-10"	986	3'- 1"	2'- 9"	56	3'-0"	112	5	18"	39'-9"	133	29	39'-9"	770	7'- 1"	19	18	51	0.556	121.3	0.5	70	22.7	4,921
6'-0"	4'-0"	194	#4	5"	5'- 0"	648	2'-10"	2'- 2"	56	4'-0"	150	10	7"	39'-9"	266	29	39'-9"	770	6'-11"	18	16	45	0.483	104.4	0.5	63	19.8	4,237
6'-0"	4'-0"	162	#5	6"	5'- 9"	972	3'- 1"	2'- 8"	56	4'-0"	150	5	18"	39'-9"	133	29	39'-9"	770	6'-11"	18	16	45	0.527	133.0	0.5	63	21.6	5,384
6'-0"	4'-0"	162	#5	6"	5'-10"	986	3'- 1"	2'- 9"	56	4'-0"	150	5	18"	39'-9"	133	29	39'-9"	770	7'- 1"	19	18	51	0.605	126.5	0.5	70	24.7	5,128
6'-0"	5'-0"	194	#4	5"	5'- 0"	648	2'-10"	2'- 2"	56	5'-0"	187	10	7"	39'-9"	266	33	39'-9"	876	6'-11"	18	16	45	0.526	111.2	0.5	63	21.5	4,509
6'-0"	5'-0"	162	#5	6"	5'- 9"	972	3'- 1"	2'- 8"	56	5'-0"	187	5	18"	39'-9"	133	33	39'-9"	876	6'-11"	18	16	45	0.570	140.8	0.5	63	23.3	5,696
6'-0"	5'-0"	162	#5	6"	5'-10"	986	3'- 1"	2'- 9"	56	5'-0"	187	5	18"	39'-9"	133	33	39'-9"	876	7'- 1"	19	18	51	0.654	142.8	0.5	70	26.7	5,780
6'-0"	6'-0"	194	#4	5"	5'- 0"	648	2'-10"	2'- 2"	56	6'-0"	224	10	7"	39'-9"	266	37	39'-9"	982	6'-11"	18	16	45	0.569	118.0	0.5	63	23.3	4,782
6'-0"	6'-0"	162	#5	6"	5'- 9"	972	3'- 1"	2'- 8"	56	6'-0"	224	5	18"	39'-9"	133	37	39'-9"	982	6'-11"	18	16	45	0.613	148.6	0.5	63	25.0	6,008
6'-0"	6'-0"	162	#5	6"	5'-10"	986	3'- 1"	2'- 9"	56	6'-0"	224	5	18"	39'-9"	133	37	39'-9"	982	7'- 1"	19	18	51	0.704	150.6	0.5	70	28.7	6,092

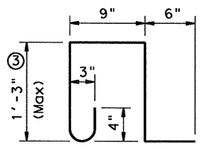

BARS K ~ #4
(Spa = 1'-0" Max)
(Length = 4'-3")

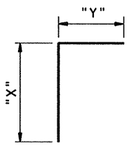

BARS C

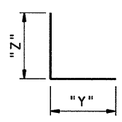

BARS D

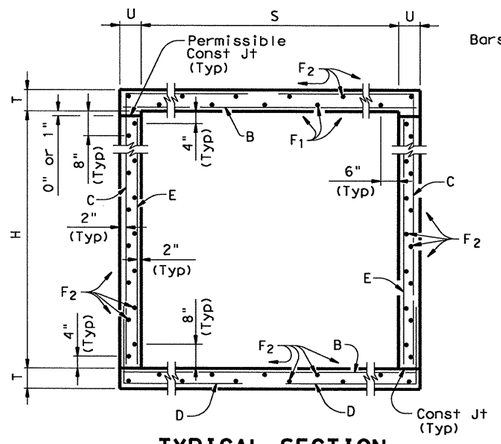

TYPICAL SECTION

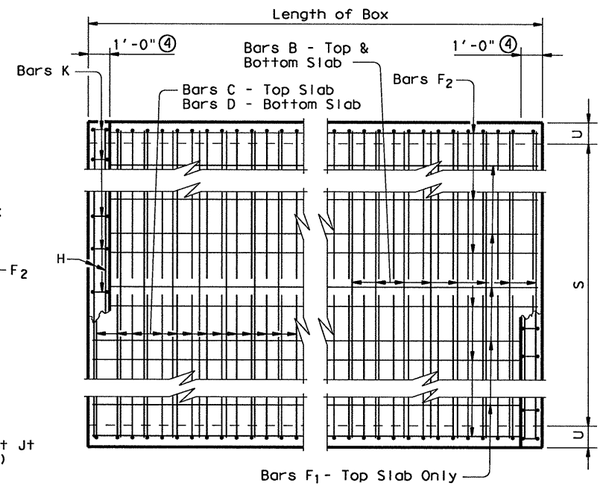

PLAN OF REINF STEEL

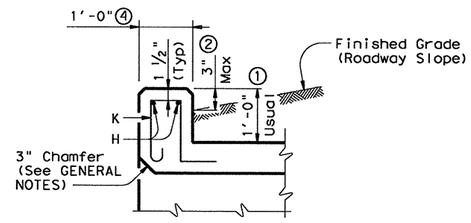

SECTION THRU CURB

① 0" min to 5'-0" max. Estimated curb heights are shown elsewhere in the plans. For structures with pedestrian rail, bicycle rail or curbs taller than 1'-0", refer to ECD standard. For structures with T6 bridge rail, refer to T6-CM standard. For structures with traffic rail, other than T6, refer to RAC standard.

② For vehicle safety, the following requirements must be met:
- For structures without bridge rail, curbs shall project no more than 3" above finished grade.
- For structures with bridge rail, curbs shall be flush with finished grade.

Curb heights shall be reduced, if necessary, to meet the above requirements. No changes will be made in quantities and no additional compensation will be allowed for this work.

③ For curbs less than 1'-0" high, tilt bars K or reduce bar height as necessary to maintain cover. For curbs less than 3" high, bars K may be omitted.

④ 1'-0" typical. 2'-0" when RAC standard is referred to elsewhere in the plans.

⑤ For each box size, minimum fill height shown shall be used for all culverts with less than 2'-0" of fill.

GENERAL NOTES:

Designed according to AASHTO LRFD Specifications.
Designed to the maximum fill heights shown.
All reinforcing steel shall be Grade 60.
All concrete shall be Class "C" with these exceptions: use Class "S" for top slabs of culverts with overlay, with 1-to-2 course surface treatment, or with the top slab as the final riding surface.
Class "C" concrete shall have a minimum compressive strength of 3,600 psi. Class "S" concrete shall have a minimum compressive strength of 4,000 psi.
The use of permanent forms is not allowed.
Reinforcing bars shall be adjusted to provide a minimum of 1 1/4 inches clear cover.
The bottom edge of the top slab shall be chamfered 3 inches at the entrance.
Construction joints shown at the flow line may be raised a maximum of 6 inches at the Contractor's option. If this option is used, Bars E may be cut off or raised, and Bars C and D may be reversed.
See Standard SCC-MD for skewed ends, angle sections and lengthening details.

HL93 LOADING

Texas Department of Transportation
Bridge Division

SINGLE BOX CULVERTS CAST-IN-PLACE 0' TO 30' FILL

SCC-5 & 6

FILE: scc56ste.dgn	DN: GAF	CK: LMW	DW: BWH/TxDOT	CK: GAF
©TxDOT February 2010	DISTRICT	STATE PROJECT NO.		SHEET
REVISIONS	18	(SEE TITLE SHEET		354
	COUNTY	CONTROL	SECT	JOB	HIGHWAY
	COLLIN	0091	04	055	SH 289

DISCLAIMER:
The use of this standard is governed by the "Texas Engineering Practice Act". No warranty of any kind is made by TxDOT for any purpose whatsoever. TxDOT assumes no responsibility for the conversion of this standard to other formats or for incorrect results or damages resulting from its use.

ACC: AYED LEVELS 1

BILLS OF REINFORCING STEEL (For Box Length = 40 feet)

NUMBER OF SPANS	SECTION DIMENSIONS S	H	T	U	Bars B No.	Size	Spa	Length	Wt	Bars C & D No.	Size	Spa	Bar C Length	Bar C Wt	Bar D Length	Bar D Wt	Bars E No.	Size	Spa	Length	Wt	Bars F_1 ~#4 No.	Spa	Length	Wt	Bars F_2 ~#4 at 1'-6" Max No.	Length	Wt	Bars M~#4 at 1'-6" Max No.	Length	Wt	Bars Y & Z~#4 at 1'-0" Max No.	Bar Y Length	Bar Y Wt	Bar Z Length	Bar Z Wt	Bars H 4~#4 Length	Weight	Bars K No.	Weight
2	6'-0"	3'-0"	7"	7"	162	#5	6"	13'- 6"	2,281	162	#4	6"	8'-11"	965	7'- 8"	830	194	#5	5"	6'- 0"	1,214	16	9"	39'-9"	425	50	39'-9"	1,328	56	3'- 0"	112	41	4'- 6"	123	7'- 0"	192	13'- 6"	36	30	85
3	6'-0"	3'-0"	7"	7"	162	#5	6"	20'- 1"	3,393	162	#4	6"	8'-11"	965	7'- 8"	830	194	#5	5"	12'- 7"	2,546	24	9"	39'-9"	637	71	39'-9"	1,885	56	3'- 0"	112	82	4'- 6"	246	7'- 0"	383	20'- 1"	54	42	119
4	6'-0"	3'-0"	7"	7"	162	#5	6"	26'- 8"	4,506	162	#4	6"	8'-11"	965	7'- 8"	830	194	#5	5"	19'- 2"	3,878	32	9"	39'-9"	850	92	39'-9"	2,443	56	3'- 0"	112	123	4'- 6"	370	7'- 0"	575	26'- 8"	71	56	159
5	6'-0"	3'-0"	7"	7"	162	#5	6"	33'- 3"	5,618	162	#4	6"	8'-11"	965	7'- 8"	830	194	#5	5"	25'- 9"	5,210	40	9"	39'-9"	1,062	113	39'-9"	3,000	56	3'- 0"	112	164	4'- 6"	493	7'- 0"	767	33'- 3"	89	70	199
6	6'-0"	3'-0"	7"	7"	162	#5	6"	39'-10"	6,730	162	#4	6"	8'-11"	965	7'- 8"	830	194	#5	5"	32'- 4"	6,542	48	9"	39'-9"	1,275	134	39'-9"	3,558	56	3'- 0"	112	205	4'- 6"	616	7'- 0"	959	39'-10"	106	82	233
2	6'-0"	4'-0"	7"	7"	162	#5	6"	13'- 6"	2,281	162	#4	6"	9'-11"	1,073	7'- 8"	830	194	#5	5"	6'- 0"	1,214	16	9"	39'-9"	425	50	39'-9"	1,328	56	4'- 0"	150	41	4'- 6"	123	9'- 0"	246	13'- 6"	36	30	85
3	6'-0"	4'-0"	7"	7"	162	#5	6"	20'- 1"	3,393	162	#4	6"	9'-11"	1,073	7'- 8"	830	194	#5	5"	12'- 7"	2,546	24	9"	39'-9"	637	71	39'-9"	1,885	56	4'- 0"	150	82	4'- 6"	246	9'- 0"	493	20'- 1"	54	42	119
4	6'-0"	4'-0"	7"	7"	162	#5	6"	26'- 8"	4,506	162	#4	6"	9'-11"	1,073	7'- 8"	830	194	#5	5"	19'- 2"	3,878	32	9"	39'-9"	850	92	39'-9"	2,443	56	4'- 0"	150	123	4'- 6"	370	9'- 0"	739	26'- 8"	71	56	159
5	6'-0"	4'-0"	7"	7"	162	#5	6"	33'- 3"	5,618	162	#4	6"	9'-11"	1,073	7'- 8"	830	194	#5	5"	25'- 9"	5,210	40	9"	39'-9"	1,062	113	39'-9"	3,000	56	4'- 0"	150	164	4'- 6"	493	9'- 0"	986	33'- 3"	89	70	199
6	6'-0"	4'-0"	7"	7"	162	#5	6"	39'-10"	6,730	162	#4	6"	9'-11"	1,073	7'- 8"	830	194	#5	5"	32'- 4"	6,542	48	9"	39'-9"	1,275	134	39'-9"	3,558	56	4'- 0"	150	205	4'- 6"	616	9'- 0"	1,232	39'-10"	106	82	233
2	6'-0"	5'-0"	7"	7"	162	#5	6"	13'- 6"	2,281	162	#4	6"	10'-11"	1,181	7'- 8"	830	194	#5	5"	6'- 0"	1,214	16	9"	39'-9"	425	56	39'-9"	1,487	56	5'- 0"	187	41	4'- 6"	123	11'- 0"	301	13'- 6"	36	30	85
3	6'-0"	5'-0"	7"	7"	162	#5	6"	20'- 1"	3,393	162	#4	6"	10'-11"	1,181	7'- 8"	830	194	#5	5"	12'- 7"	2,546	24	9"	39'-9"	637	79	39'-9"	2,098	56	5'- 0"	187	82	4'- 6"	246	11'- 0"	603	20'- 1"	54	42	119
4	6'-0"	5'-0"	7"	7"	162	#5	6"	26'- 8"	4,506	162	#4	6"	10'-11"	1,181	7'- 8"	830	194	#5	5"	19'- 2"	3,878	32	9"	39'-9"	850	102	39'-9"	2,708	56	5'- 0"	187	123	4'- 6"	370	11'- 0"	904	26'- 8"	71	56	159
5	6'-0"	5'-0"	7"	7"	162	#5	6"	33'- 3"	5,618	162	#4	6"	10'-11"	1,181	7'- 8"	830	194	#5	5"	25'- 9"	5,210	40	9"	39'-9"	1,062	125	39'-9"	3,319	56	5'- 0"	187	164	4'- 6"	493	11'- 0"	1,205	33'- 3"	89	70	199
6	6'-0"	5'-0"	7"	7"	162	#5	6"	39'-10"	6,730	162	#4	6"	10'-11"	1,181	7'- 8"	830	194	#5	5"	32'- 4"	6,542	48	9"	39'-9"	1,275	148	39'-9"	3,930	56	5'- 0"	187	205	4'- 6"	616	11'- 0"	1,506	39'-10"	106	82	233
2	6'-0"	6'-0"	7"	7"	162	#5	6"	13'- 6"	2,281	194	#4	5"	11'-11"	1,544	7'- 8"	994	194	#5	5"	6'- 0"	1,214	16	9"	39'-9"	425	62	39'-9"	1,646	56	6'- 0"	224	41	4'- 6"	123	13'- 0"	356	13'- 6"	36	30	85
3	6'-0"	6'-0"	7"	7"	162	#5	6"	20'- 1"	3,393	194	#4	5"	11'-11"	1,544	7'- 8"	994	194	#5	5"	12'- 7"	2,546	24	9"	39'-9"	637	87	39'-9"	2,310	56	6'- 0"	224	82	4'- 6"	246	13'- 0"	712	20'- 1"	54	42	119
4	6'-0"	6'-0"	7"	7"	162	#5	6"	26'- 8"	4,506	194	#4	5"	11'-11"	1,544	7'- 8"	994	194	#5	5"	19'- 2"	3,878	32	9"	39'-9"	850	112	39'-9"	2,974	56	6'- 0"	224	123	4'- 6"	370	13'- 0"	1,068	26'- 8"	71	56	159
5	6'-0"	6'-0"	7"	7"	162	#5	6"	33'- 3"	5,618	194	#4	5"	11'-11"	1,544	7'- 8"	994	194	#5	5"	25'- 9"	5,210	40	9"	39'-9"	1,062	137	39'-9"	3,638	56	6'- 0"	224	164	4'- 6"	493	13'- 0"	1,424	33'- 3"	89	70	199
6	6'-0"	6'-0"	7"	7"	162	#5	6"	39'-10"	6,730	194	#4	5"	11'-11"	1,544	7'- 8"	994	194	#5	5"	32'- 4"	6,542	48	9"	39'-9"	1,275	162	39'-9"	4,302	56	6'- 0"	224	205	4'- 6"	616	13'- 0"	1,780	39'-10"	106	82	233

QUANTITIES

NUMBER OF SPANS	Per foot of Barrel Conc (CY)	Reinf (Lb)	Curb Conc (CY)	Reinf (Lb)	Total Conc (CY)	Reinf (Lb)
2	0.789	186.8	1.0	121	32.6	7,591
3	1.138	274.9	1.5	173	47.0	11,170
4	1.487	363.2	2.0	230	61.5	14,759
5	1.836	451.4	2.5	288	75.9	18,345
6	2.186	539.7	3.0	339	90.4	21,926
2	0.853	191.8	1.0	121	35.1	7,791
3	1.224	281.3	1.5	173	50.5	11,426
4	1.595	371.0	2.0	230	65.8	15,069
5	1.966	460.6	2.5	288	81.1	18,710
6	2.337	550.2	3.0	339	96.5	22,345
2	0.918	200.7	1.0	121	37.7	8,150
3	1.311	293.0	1.5	173	53.9	11,894
4	1.703	385.4	2.0	230	70.1	15,644
5	2.096	477.6	2.5	288	86.3	19,393
6	2.488	569.9	3.0	339	102.5	23,136
2	0.983	220.2	1.0	121	40.3	8,928
3	1.397	315.2	1.5	173	57.4	12,779
4	1.811	410.2	2.0	230	74.4	16,638
5	2.225	505.2	2.5	288	91.5	20,495
6	2.639	600.2	3.0	339	108.6	24,346

H	Bar Dimensions "X"	"Y"
3'-0"	3'-5"	2'-2"
4'-0"	4'-5"	2'-2"
5'-0"	5'-5"	2'-2"
6'-0"	6'-5"	2'-2"

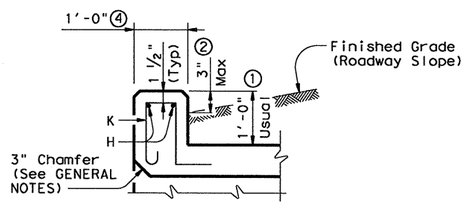

SECTION THRU CURB

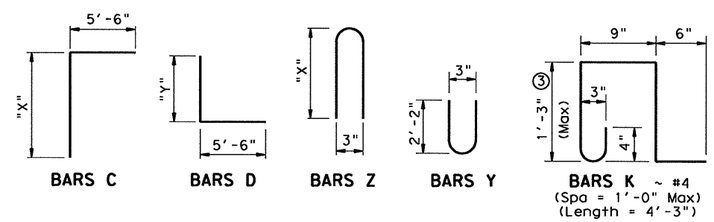

BARS C BARS D BARS Z BARS Y BARS K ~ #4 (Spa = 1'-0" Max) (Length = 4'-3")

GENERAL NOTES:

Designed according to AASHTO LRFD Specifications.
Designed to the maximum fill height shown.
All reinforcing steel shall be Grade 60.
All concrete shall be Class "C" with these exceptions: use Class "S" for top slabs of culverts with overlay, with 1-to-2 course surface treatment, or with the top slab as the final riding surface.
Class "C" concrete shall have a minimum compressive strength of 3,600 psi. Class "S" concrete shall have a minimum compressive strength of 4,000 psi.
The use of permanent forms is not allowed.
The bottom edge of the top slab shall be chamfered 3" at the entrance.
Reinforcing bars shall be adjusted to provide a minimum of 1 1/4" clear cover.
Construction joints shown at the flow line may be raised a maximum of 6" at the Contractor's option. If this option is used, Bars M may be cut off or raised, Bars C and D may be reversed, and Bars Y and Z may be reversed.
See standard MC-MD for skewed ends, angle sections and lengthening details.

① 0" min to 5'-0" max. Estimated curb heights are shown elsewhere in the plans. For structures with pedestrian rail, bicycle rail or curbs taller than 1'-0", refer to ECD standard. For structures with T6 bridge rail, refer to T6-CM standard. For structures with traffic rail, other than T6, refer to RAC standard.

② For vehicle safety, the following requirements must be met:
- For structures without bridge rail, curbs shall project no more than 3" above finished grade.
- For structures with bridge rail, curbs shall be flush with finished grade.

Curb heights shall be reduced, if necessary, to meet the above requirements. No changes will be made in quantities and no additional compensation will be allowed for this work.

③ For curbs less than 1'-0" high, tilt bars K or reduce bar height as necessary to maintain cover. For curbs less than 3" high, bars K may be omitted.

④ 1'-0" typical. 2'-0" when RAC standard is referred to elsewhere in the plans.

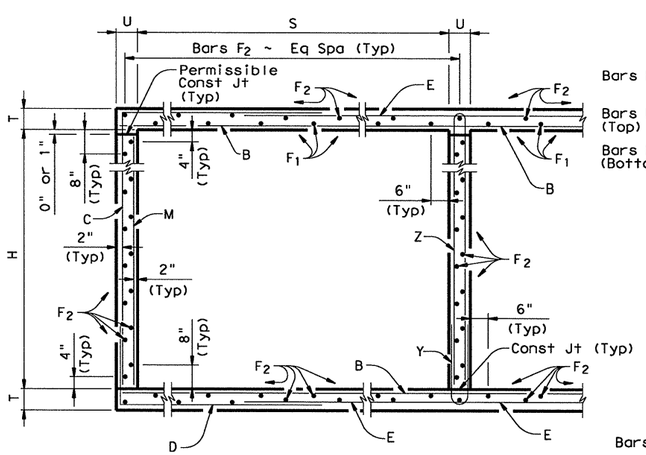

TYPICAL SECTION

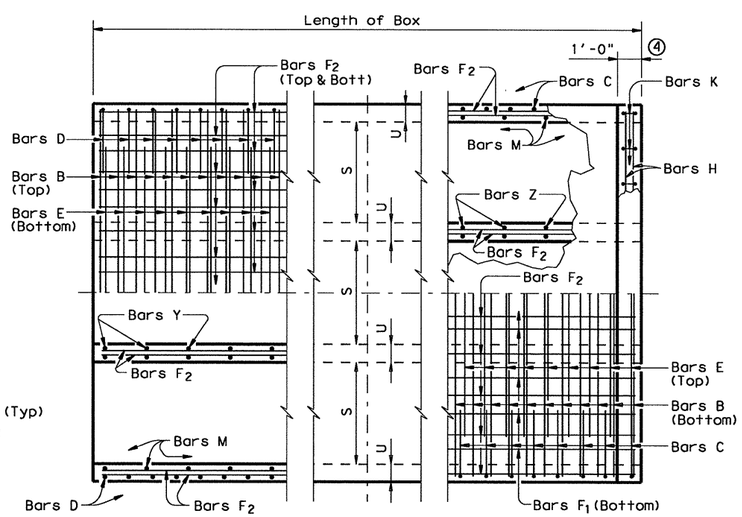

BOTTOM SLAB PART PLANS TOP SLAB

HL93 LOADING

Texas Department of Transportation
Bridge Division

MULTIPLE BOX CULVERTS CAST-IN-PLACE 6'-0" SPAN 0' TO 16' FILL

MC-6-16

FILE: mc616ste.dgn	DN: GAF	CK: LMW	DW: BWH/TxDOT	CK: GAF
© TxDOT February 2010	DISTRICT	STATE PROJECT NO.		SHEET
REVISIONS	18	(SEE TITLE SHEET)		355
	COUNTY	CONTROL	SECT	JOB	HIGHWAY
	COLLIN	0091	04	055	SH 289

DISCLAIMER:
The use of this standard is governed by the "Texas Engineering Practice Act". No warranty of any kind is made by TxDOT for any purpose whatsoever. TxDOT assumes no responsibility for the conversion of this standard to other formats or for incorrect results or damages resulting from its use.

ACC:
LEVELS 6... LAYED
1

R-201104-01

BOX DATA

SECTION DIMENSIONS S (ft)	H (ft)	T_T (in)	T_B (in)	T_S (in)	Fill Height (ft)	M (Min) (in)	REINFORCING (in²/ft) ② A_{S1}	A_{S2}	A_{S3}	A_{S4}	A_{S5}	A_{S6}	A_{S7}	A_{S8}	① Lift Weight (Tons)
7	4	8	8	8	<2	-	0.21	0.34	0.25	0.19	0.19	0.19	0.19	0.19	10.4
7	4	8	8	8	2<3	43	0.23	0.28	0.28	0.19	-	-	-	-	10.4
7	4	8	8	8	3-5	43	0.19	0.22	0.19	0.19	-	-	-	-	10.4
7	4	8	8	8	10	43	0.19	0.23	0.23	0.19	-	-	-	-	10.4
7	4	8	8	8	15	41	0.24	0.30	0.30	0.19	-	-	-	-	10.4
7	4	8	8	8	20	41	0.31	0.38	0.39	0.19	-	-	-	-	10.4
7	4	8	8	8	25	41	0.38	0.47	0.48	0.19	-	-	-	-	10.4
7	4	8	8	8	30	41	0.46	0.57	0.57	0.19	-	-	-	-	10.4
7	5	8	8	8	<2	-	0.19	0.36	0.27	0.19	0.19	0.19	0.19	0.19	11.2
7	5	8	8	8	2<3	47	0.21	0.31	0.31	0.19	-	-	-	-	11.2
7	5	8	8	8	3-5	43	0.19	0.24	0.21	0.19	-	-	-	-	11.2
7	5	8	8	8	10	43	0.19	0.25	0.26	0.19	-	-	-	-	11.2
7	5	8	8	8	15	41	0.21	0.32	0.33	0.19	-	-	-	-	11.2
7	5	8	8	8	20	41	0.27	0.41	0.42	0.19	-	-	-	-	11.2
7	5	8	8	8	25	41	0.33	0.51	0.52	0.19	-	-	-	-	11.2
7	5	8	8	8	30	41	0.40	0.61	0.62	0.19	-	-	-	-	11.2
7	6	8	8	8	<2	-	0.19	0.38	0.30	0.19	0.19	0.19	0.19	0.19	12.0
7	6	8	8	8	2<3	59	0.19	0.33	0.34	0.19	-	-	-	-	12.0
7	6	8	8	8	3-5	47	0.19	0.25	0.23	0.19	-	-	-	-	12.0
7	6	8	8	8	10	43	0.19	0.26	0.27	0.19	-	-	-	-	12.0
7	6	8	8	8	15	41	0.19	0.34	0.35	0.19	-	-	-	-	12.0
7	6	8	8	8	20	41	0.24	0.43	0.45	0.19	-	-	-	-	12.0
7	6	8	8	8	25	41	0.29	0.53	0.55	0.19	-	-	-	-	12.0
7	6	8	8	8	30	41	0.35	0.64	0.65	0.19	-	-	-	-	12.0
7	7	8	8	8	<2	-	0.19	0.40	0.33	0.19	0.19	0.19	0.19	0.19	12.8
7	7	8	8	8	2<3	59	0.19	0.36	0.37	0.19	-	-	-	-	12.8
7	7	8	8	8	3-5	59	0.19	0.27	0.25	0.19	-	-	-	-	12.8
7	7	8	8	8	10	47	0.19	0.27	0.29	0.19	-	-	-	-	12.8
7	7	8	8	8	15	43	0.19	0.35	0.37	0.19	-	-	-	-	12.8
7	7	8	8	8	20	43	0.22	0.44	0.46	0.19	-	-	-	-	12.8
7	7	8	8	8	25	43	0.27	0.54	0.57	0.19	-	-	-	-	12.8
7	7	8	8	8	30	41	0.32	0.65	0.67	0.19	-	-	-	-	12.8
7	3	8	8	8	<2	-	0.28	0.36	0.24	0.19	0.21	0.19	0.19	0.19	9.6
7	3	8	8	8	30	58	0.53	0.49	0.50	0.19	-	-	-	-	9.6

⑤

① For Box Length = 8'-0"

② A_{S1} thru A_{S4}, A_{S7} and A_{S8} are minimum required areas of reinforcement per linear foot of box length. A_{S6} and A_{S5} are minimum required areas of reinforcement per linear foot of box width.

⑤ These designs were created by TxDOT and are not shown in the ASTM Specifications.

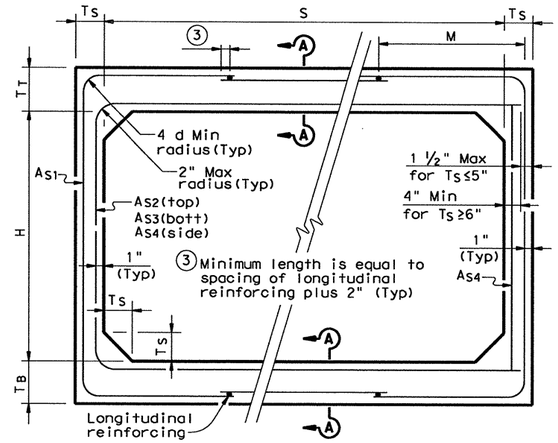

CORNER OPTION "A" CORNER OPTION "B"

FILL HEIGHT 2 FT AND GREATER

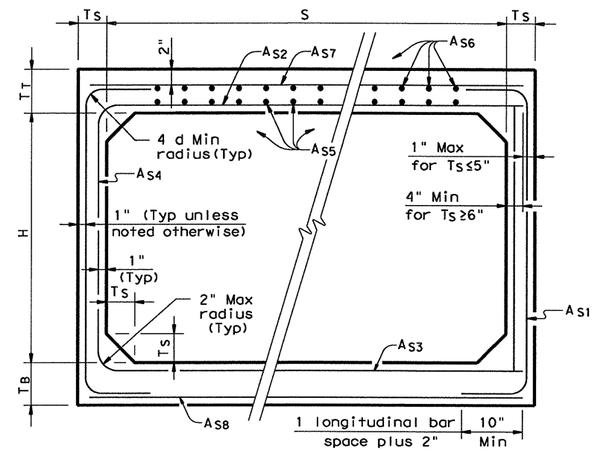

CORNER OPTION "A" CORNER OPTION "B"

FILL HEIGHT LESS THAN 2 FT

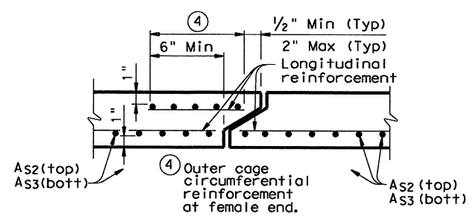

SECTION A-A

(TOP AND BOTTOM SLAB JOINT REINFORCEMENT)

GENERAL NOTES:

Designs shown conform to ASTM C1577.

Refer to ASTM C1577 for information or details not shown.

All concrete shall be Class "H" Concrete with a minimum compressive strength of 5,000 psi.

See SCP-MD standard sheet for miscellaneous details and notes not shown.

In lieu of furnishing the designs shown on this sheet, the contractor may furnish an alternate design that is equal to or exceeds the box design for the design fill height in the table. Shop plans for alternate designs shall be submitted in accordance with Item "Precast Concrete Structures".

HL93 LOADING

Texas Department of Transportation
Bridge Division

SINGLE BOX CULVERTS PRECAST 7'-0" SPAN

SCP-7

FILE: scp07ste.dgn	DN: GAF	CK: LMW	DW: BWH/TxDOT	CK: GAF
©TxDOT February 2010	DISTRICT	STATE PROJECT NO.		SHEET
REVISIONS	18	(SEE TITLE SHEET		356
	COUNTY	CONTROL	SECT	JOB	HIGHWAY
	COLLIN	0091	04	055	SH 289

DISCLAIMER:
The use of this standard is governed by the "Texas Engineering Practice Act". The use of any part of this standard is governed by TxDOT for use on TxDOT projects only. TxDOT assumes no responsibility for the conversion of this standard to other formats or for incorrect results or damages resulting from its use.

LEVELS | 1 | 2 | 3 | 4 | 5 | 6 | 7 | 8 | 9 | 10 | 11 | 12 | 13 | 14 | 15 | 16 | 17 | 18 | 19 | 20 | 21 | 22 | 23 | 24 | 25 | 26 | 27 | 28 | 29 | 30 | 31 | 32 | 33 | 34 | 35 | 36 | 37 | 38 | 39 | 40 | 41 | 42 | 43 | 44 | 45 | 46 | 47 | 48 | 49 | 50 | 51 | 52 | 53 | 54 | 55 | 56 | 57 | 58 | 59 | 60 | 61 | 62 | 63 | 64 | 65 | 66 | 67 | 68 | 69 | 70 | 71 | 72 | 73 | 74 | 75 | 76 | 77 | 78 | 79 | 80 | 81 | 82 | 83 | 84 | 85 | 86 | 87 | 88 | 89 | 90 | 91 | 92 | 93 | 94 | 95 | 96 | 97 | 98 | 99 | 100

AYED | ACC:

R-201104-01

DISCLAIMER:
The use of this standard is governed by the "Texas Engineering Practice Act". No warranty of any kind is made by TxDOT for any purpose whatsoever. TxDOT assumes no responsibility for the conversion of this standard to other formats or for incorrect results or damages resulting from its use.

BILLS OF REINFORCING STEEL (For Box Length = 40 feet)

SECTION DIMENSIONS				FILL HEIGHT ⑤	Bars B					Bars C							Bars D							Bars E~#4 at 18" Max			Bars F1 ~#4				Bars F2~#4 at 18" Max			Bars H 4~#4		Bars K		QUANTITIES: Per foot of Barrel		Curb		Total	
S	H	T	U		No.	Size	Spa	Length	Weight	No.	Size	Spa	Length	Weight	"X"	"Y"	No.	Size	Spa	Length	Weight	"Y"	"Z"	No.	Length	Wt	No.	Spa	Length	Wt	No.	Length	Wt	Length	Wt	No.	Wt	Conc (CY)	Reinf (Lb)	Conc (CY)	Reinf (Lb)	Conc (CY)	Reinf (Lb)
7'-0"	3'-0"	7"	7"	16'	162	#6	6"	7'-11"	1,926	194	#5	5"	6'-11"	1,400	3'-5"	3'-6"	194	#5	5"	6'-1"	1,231	3'-6"	2'-7"	56	3'-0"	112	12	7"	39'-9"	319	31	39'-9"	823	7'-11"	21	18	51	0.483	145.3	0.6	72	19.9	5,883
7'-0"	3'-0"	8"	7"	20'	162	#6	6"	7'-11"	1,926	194	#5	5"	7'-0"	1,416	3'-6"	3'-6"	194	#5	5"	6'-2"	1,248	3'-6"	2'-8"	56	3'-0"	112	5	18"	39'-9"	133	31	39'-9"	823	7'-11"	21	18	51	0.533	141.5	0.6	72	21.9	5,730
7'-0"	3'-0"	9"	8"	23'	162	#6	6"	8'-1"	1,967	194	#5	5"	7'-1"	1,433	3'-7"	3'-6"	194	#5	5"	6'-3"	1,265	3'-6"	2'-9"	56	3'-0"	112	5	18"	39'-9"	133	31	39'-9"	823	8'-1"	22	20	57	0.611	143.3	0.6	79	25.0	5,812
7'-0"	3'-0"	10"	8"	30'	194	#6	5"	8'-1"	2,355	194	#5	5"	7'-2"	1,450	3'-8"	3'-6"	194	#5	5"	6'-4"	1,281	3'-6"	2'-10"	56	3'-0"	112	5	18"	39'-9"	133	31	39'-9"	823	8'-1"	22	20	57	0.663	153.9	0.6	79	27.1	6,233
7'-0"	4'-0"	7"	7"	16'	162	#6	6"	7'-11"	1,926	162	#5	6"	7'-11"	1,338	4'-5"	3'-6"	162	#5	6"	6'-1"	1,028	3'-6"	2'-7"	56	4'-0"	150	12	7"	39'-9"	319	31	39'-9"	823	7'-11"	21	18	51	0.526	139.6	0.6	72	21.6	5,656
7'-0"	4'-0"	8"	7"	20'	194	#6	5"	7'-11"	2,307	162	#5	6"	8'-0"	1,352	4'-6"	3'-6"	162	#5	6"	6'-2"	1,042	3'-6"	2'-8"	56	4'-0"	150	5	18"	39'-9"	133	31	39'-9"	823	7'-11"	21	18	51	0.576	145.2	0.6	72	23.6	5,879
7'-0"	4'-0"	9"	8"	23'	194	#6	5"	8'-1"	2,355	162	#5	6"	8'-1"	1,366	4'-7"	3'-6"	162	#5	6"	6'-3"	1,056	3'-6"	2'-9"	56	4'-0"	150	5	18"	39'-9"	133	31	39'-9"	823	8'-1"	22	20	57	0.660	147.1	0.6	79	27.0	5,962
7'-0"	4'-0"	10"	8"	30'	194	#6	5"	8'-1"	2,355	194	#5	5"	8'-2"	1,652	4'-8"	3'-6"	194	#5	5"	6'-4"	1,281	3'-6"	2'-10"	56	4'-0"	150	5	18"	39'-9"	133	31	39'-9"	823	8'-1"	22	20	57	0.712	159.9	0.6	79	29.1	6,473
7'-0"	5'-0"	7"	7"	16'	162	#6	6"	7'-11"	1,926	162	#5	6"	8'-11"	1,507	5'-5"	3'-6"	162	#5	6"	6'-1"	1,028	3'-6"	2'-7"	56	5'-0"	187	12	7"	39'-9"	319	35	39'-9"	929	7'-11"	21	18	51	0.569	147.4	0.6	72	23.4	5,968
7'-0"	5'-0"	8"	7"	20'	194	#6	5"	7'-11"	2,307	162	#5	6"	9'-0"	1,521	5'-6"	3'-6"	162	#5	6"	6'-2"	1,042	3'-6"	2'-8"	56	5'-0"	187	5	18"	39'-9"	133	35	39'-9"	929	7'-11"	21	18	51	0.619	153.0	0.6	72	25.4	6,191
7'-0"	5'-0"	9"	8"	23'	194	#6	5"	8'-1"	2,355	162	#5	6"	9'-1"	1,535	5'-7"	3'-6"	162	#5	6"	6'-3"	1,056	3'-6"	2'-9"	56	5'-0"	187	5	18"	39'-9"	133	35	39'-9"	929	8'-1"	22	20	57	0.710	154.9	0.6	79	29.0	6,274
7'-0"	5'-0"	10"	8"	30'	194	#6	5"	8'-1"	2,355	194	#5	5"	9'-2"	1,855	5'-8"	3'-6"	194	#5	5"	6'-4"	1,281	3'-6"	2'-10"	56	5'-0"	187	5	18"	39'-9"	133	35	39'-9"	929	8'-1"	22	20	57	0.761	168.5	0.6	79	31.0	6,819
7'-0"	6'-0"	7"	7"	16'	194	#6	5"	7'-11"	2,307	162	#5	6"	9'-11"	1,676	6'-5"	3'-6"	162	#5	6"	6'-1"	1,028	3'-6"	2'-7"	56	6'-0"	224	12	7"	39'-9"	319	39	39'-9"	1,036	7'-11"	21	18	51	0.612	164.8	0.6	72	25.1	6,662
7'-0"	6'-0"	8"	7"	20'	194	#6	5"	7'-11"	2,307	162	#5	6"	10'-0"	1,690	6'-6"	3'-6"	162	#5	6"	6'-2"	1,042	3'-6"	2'-8"	56	6'-0"	224	5	18"	39'-9"	133	39	39'-9"	1,036	7'-11"	21	18	51	0.663	160.8	0.6	72	27.1	6,504
7'-0"	6'-0"	9"	8"	23'	194	#6	5"	8'-1"	2,355	162	#5	6"	10'-1"	1,704	6'-7"	3'-6"	162	#5	6"	6'-3"	1,056	3'-6"	2'-9"	56	6'-0"	224	5	18"	39'-9"	133	39	39'-9"	1,036	8'-1"	22	20	57	0.759	162.7	0.6	79	31.0	6,587
7'-0"	6'-0"	10"	8"	30'	194	#6	5"	8'-1"	2,355	194	#5	5"	10'-2"	2,057	6'-8"	3'-6"	194	#5	5"	6'-4"	1,281	3'-6"	2'-10"	56	6'-0"	224	5	18"	39'-9"	133	39	39'-9"	1,036	8'-1"	22	20	57	0.811	177.2	0.6	79	33.0	7,165
7'-0"	7'-0"	7"	7"	16'	194	#6	5"	7'-11"	2,307	162	#5	6"	10'-11"	1,845	7'-5"	3'-6"	162	#5	6"	6'-1"	1,028	3'-6"	2'-7"	56	7'-0"	262	12	7"	39'-9"	319	39	39'-9"	1,036	7'-11"	21	18	51	0.655	169.9	0.6	72	26.8	6,869
7'-0"	7'-0"	8"	7"	20'	194	#6	5"	7'-11"	2,307	194	#5	5"	11'-0"	2,226	7'-6"	3'-6"	194	#5	5"	6'-2"	1,248	3'-6"	2'-8"	56	7'-0"	262	5	18"	39'-9"	133	39	39'-9"	1,036	7'-11"	21	18	51	0.706	180.3	0.6	72	28.8	7,284
7'-0"	7'-0"	9"	8"	23'	194	#6	5"	8'-1"	2,355	162	#5	6"	11'-1"	1,873	7'-7"	3'-6"	162	#5	6"	6'-3"	1,056	3'-6"	2'-9"	56	7'-0"	262	5	18"	39'-9"	133	39	39'-9"	1,036	8'-1"	22	20	57	0.809	167.9	0.6	79	33.0	6,794
7'-0"	7'-0"	10"	8"	30'	194	#6	5"	8'-1"	2,355	194	#5	5"	11'-2"	2,259	7'-8"	3'-6"	194	#5	5"	6'-4"	1,281	3'-6"	2'-10"	56	7'-0"	262	5	18"	39'-9"	133	39	39'-9"	1,036	8'-1"	22	20	57	0.860	183.2	0.6	79	35.0	7,405

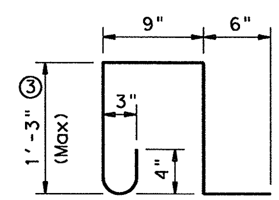

BARS K ~ #4
(Spa = 1'-0" Max)
(Length = 4'-3")

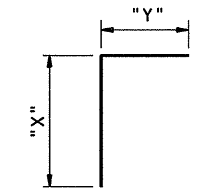

BARS C

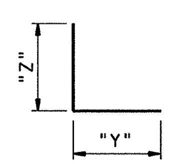

BARS D

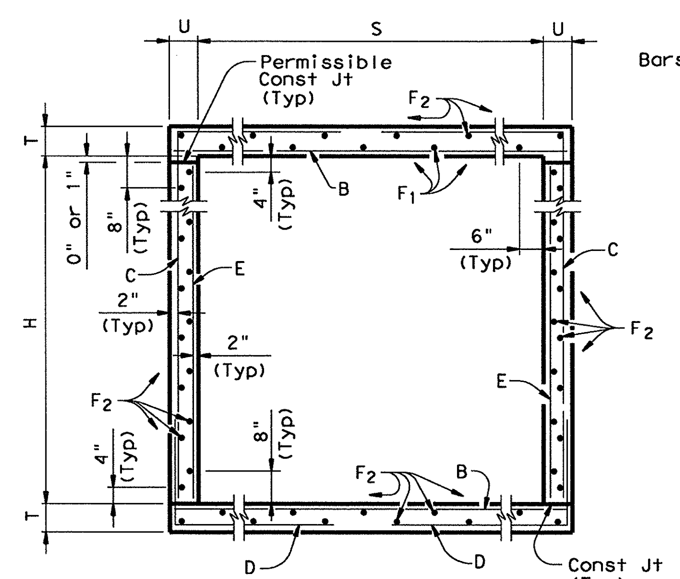

TYPICAL SECTION

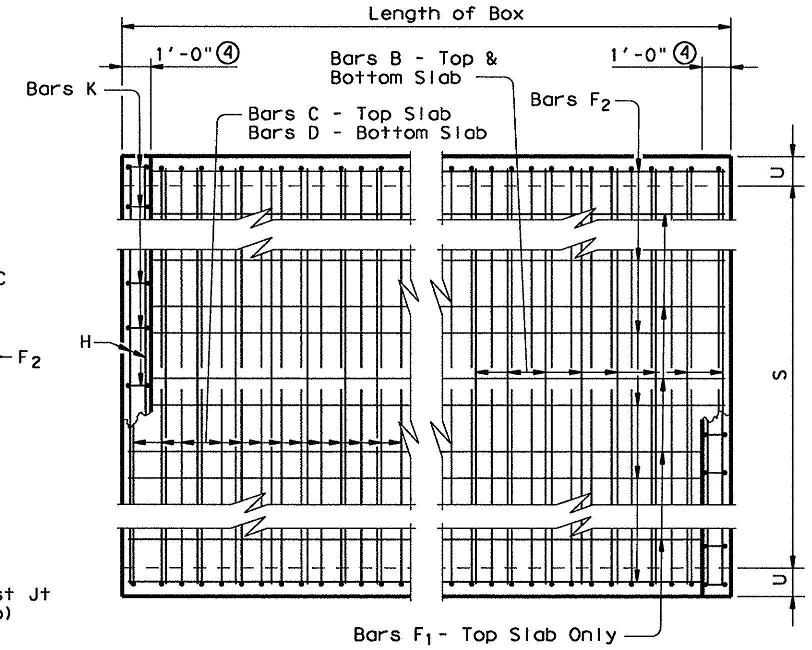

PLAN OF REINF STEEL

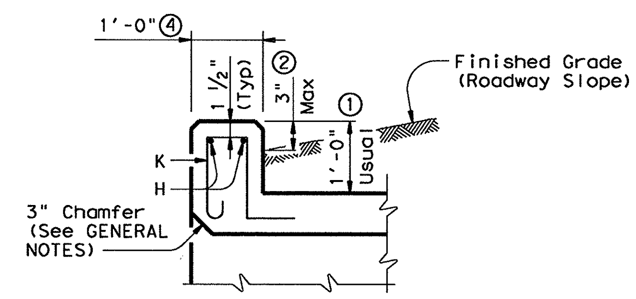

SECTION THRU CURB

① 0" min to 5'-0" max. Estimated curb heights are shown elsewhere in the plans. For structures with pedestrian rail, bicycle rail or curbs taller than 1'-0", refer to ECD standard. For structures with T6 bridge rail, refer to T6-CM standard. For structures with traffic rail, other than T6, refer to RAC standard.

② For vehicle safety, the following requirements must be met:
- For structures without bridge rail, curbs shall project no more than 3" above finished grade.
- For structures with bridge rail, curbs shall be flush with finished grade.

Curb heights shall be reduced, if necessary, to meet the above requirements. No changes will be made in quantities and no additional compensation will be allowed for this work.

③ For curbs less than 1'-0" high, tilt bars K or reduce bar height as necessary to maintain cover. For curbs less than 3" high, bars K may be omitted.

④ 1'-0" typical. 2'-0" when RAC standard is referred to elsewhere in the plans.

⑤ For each box size, minimum fill height shown shall be used for all culverts with less than 2'-0" of fill.

GENERAL NOTES:

Designed according to AASHTO LRFD Specifications.
Designed to the maximum fill heights shown.
All reinforcing steel shall be Grade 60.
All concrete shall be Class "C" with these exceptions: use Class "S" for top slabs of culverts with overlay, with 1-to-2 course surface treatment, or with the top slab as the final riding surface.
Class "C" concrete shall have a minimum compressive strength of 3,600 psi. Class "S" concrete shall have a minimum compressive strength of 4,000 psi.
The use of permanent forms is not allowed.
Reinforcing bars shall be adjusted to provide a minimum of 1 ¼ inches clear cover.
The bottom edge of the top slab shall be chamfered 3 inches at the entrance.
Construction joints shown at the flow line may be raised a maximum of 6 inches at the Contractor's option. If this option is used, Bars E may be cut off or raised, and Bars C and D may be reversed.
See Standard SCC-MD for skewed ends, angle sections and lengthening details.

HL93 LOADING

Texas Department of Transportation
Bridge Division

SINGLE BOX CULVERTS CAST-IN-PLACE
0' TO 30' FILL

SCC-7

FILE: scc07ste.dgn	DN: GAF	CK: LMW	DW: BWH/TxDOT	CK: GAF
©TxDOT February 2010	DISTRICT	STATE PROJECT NO.		SHEET
REVISIONS	18	(SEE TIITLE SHEET		357
	COUNTY	CONTROL	SECT	JOB / HIGHWAY
	COLLIN	0091	04	055 / SH 289

ACC:
LEVELS ... YED
1

R-201104-01

BOX DATA

SECTION DIMENSIONS S (ft)	H (ft)	T_T (in)	T_B (in)	T_S (in)	Fill Height (ft)	M (Min) (in)	REINFORCING (in²/ft) ② A_{S1}	A_{S2}	A_{S3}	A_{S4}	A_{S5}	A_{S6}	A_{S7}	A_{S8}	① Lift Weight (Tons)
8	4	8	8	8	<2	-	0.27	0.38	0.29	0.19	0.19	0.19	0.19	0.19	11.2
8	4	8	8	8	2<3	50	0.31	0.34	0.32	0.19	-	-	-	-	11.2
8	4	8	8	8	3-5	50	0.25	0.27	0.27	0.19	-	-	-	-	11.2
8	4	8	8	8	10	45	0.26	0.28	0.29	0.19	-	-	-	-	11.2
8	4	8	8	8	15	41	0.34	0.37	0.38	0.19	-	-	-	-	11.2
8	4	8	8	8	20	41	0.44	0.48	0.49	0.19	-	-	-	-	11.2
8	5	8	8	8	<2	-	0.24	0.40	0.32	0.19	0.19	0.19	0.19	0.19	12.0
8	5	8	8	8	2<3	50	0.28	0.37	0.35	0.19	-	-	-	-	12.0
8	5	8	8	8	3-5	45	0.23	0.29	0.30	0.19	-	-	-	-	12.0
8	5	8	8	8	10	45	0.23	0.31	0.32	0.19	-	-	-	-	12.0
8	5	8	8	8	15	41	0.30	0.41	0.42	0.19	-	-	-	-	12.0
8	5	8	8	8	20	41	0.39	0.52	0.54	0.19	-	-	-	-	12.0
8	6	8	8	8	<2	-	0.22	0.42	0.35	0.19	0.19	0.19	0.19	0.19	12.8
8	6	8	8	8	2<3	50	0.25	0.40	0.38	0.19	-	-	-	-	12.8
8	6	8	8	8	3-5	50	0.21	0.32	0.33	0.19	-	-	-	-	12.8
8	6	8	8	8	10	45	0.22	0.33	0.34	0.19	-	-	-	-	12.8
8	6	8	8	8	15	41	0.28	0.43	0.45	0.19	-	-	-	-	12.8
8	6	8	8	8	20	41	0.36	0.55	0.57	0.19	-	-	-	-	12.8
8	7	8	8	8	<2	-	0.20	0.44	0.37	0.19	0.19	0.19	0.19	0.19	13.6
8	7	8	8	8	2<3	55	0.23	0.43	0.41	0.19	-	-	-	-	13.6
8	7	8	8	8	3-5	55	0.19	0.34	0.35	0.19	-	-	-	-	13.6
8	7	8	8	8	10	50	0.20	0.34	0.36	0.19	-	-	-	-	13.6
8	7	8	8	8	15	41	0.26	0.45	0.47	0.19	-	-	-	-	13.6
8	7	8	8	8	20	41	0.33	0.57	0.60	0.19	-	-	-	-	13.6
8	8	8	8	8	<2	-	0.20	0.45	0.40	0.19	0.19	0.19	0.19	0.19	14.4
8	8	8	8	8	2<3	65	0.21	0.45	0.44	0.19	-	-	-	-	14.4
8	8	8	8	8	3-5	65	0.19	0.36	0.38	0.19	-	-	-	-	14.4
8	8	8	8	8	10	55	0.19	0.35	0.38	0.19	-	-	-	-	14.4
8	8	8	8	8	15	45	0.24	0.46	0.49	0.19	-	-	-	-	14.4
8	8	8	8	8	20	45	0.31	0.59	0.62	0.19	-	-	-	-	14.4

① For Box Length = 8'-0"

② A_{S1} thru A_{S4}, A_{S7} and A_{S8} are minimum required areas of reinforcement per linear foot of box length. A_{S6} and A_{S5} are minimum required areas of reinforcement per linear foot of box width.

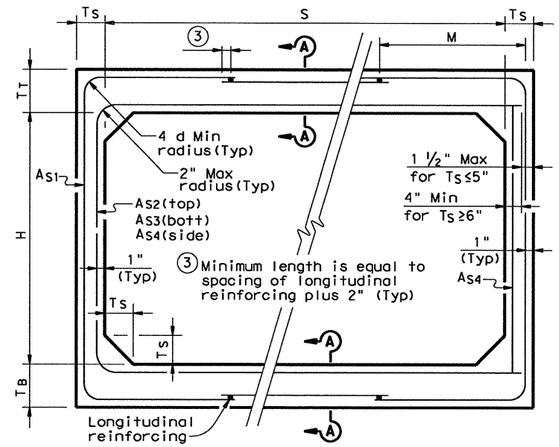

CORNER OPTION "A" CORNER OPTION "B"

FILL HEIGHT 2 FT AND GREATER

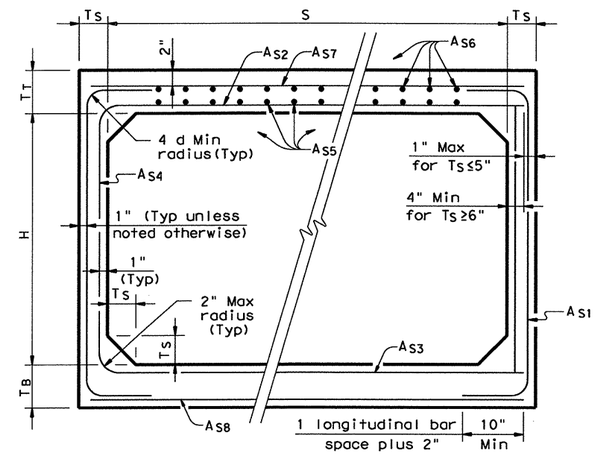

CORNER OPTION "A" CORNER OPTION "B"

FILL HEIGHT LESS THAN 2 FT

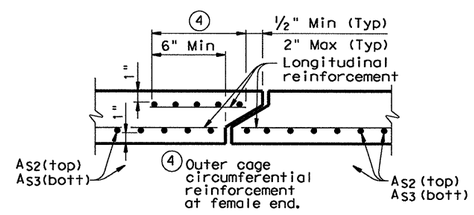

SECTION A-A

(TOP AND BOTTOM SLAB JOINT REINFORCEMENT)

GENERAL NOTES:

Designs shown conform to ASTM C1577. Refer to ASTM C1577 for information or details not shown.

All concrete shall be Class "H" Concrete with a minimum compressive strength of 5,000 psi.

See SCP-MD standard sheet for miscellaneous details and notes not shown.

In lieu of furnishing the designs shown on this sheet, the contractor may furnish an alternate design that is equal to or exceeds the box design for the design fill height in the table. Shop plans for alternate designs shall be submitted in accordance with Item "Precast Concrete Structures".

HL93 LOADING

Texas Department of Transportation
Bridge Division

SINGLE BOX CULVERTS PRECAST

8'-0" SPAN

SCP-8

FILE: scp08ste.dgn	DN: GAF	CK: LMW	DW: BWH/TxDOT	CK: GAF
©TxDOT February 2010	DISTRICT	STATE PROJECT NO.		SHEET
REVISIONS	18	(SEE TITLE SHEET		358
	COUNTY		CONTROL SECT JOB	HIGHWAY
	COLLIN		0091 04 055	SH 289

DISCLAIMER:
The use of this standard is governed by the "Texas Engineering Practice Act". No warranty of any kind is made by TxDOT for any purpose whatsoever. TxDOT assumes no responsibility for the conversion of this standard to other formats or for incorrect results or damages resulting from its use.

LEVELS ... ACC:

R-201104-01

BILLS OF REINFORCING STEEL (For Box Length = 40 feet)

SECTION DIMENSIONS S	H	T	U	⑤ FILL HEIGHT	Bars B No.	Size	Spa	Length	Weight	Bars C No.	Size	Spa	Length	Weight	"X"	"Y"
8'-0"	4'-0"	7"	7"	13'	162	#6	6"	8'-11"	2,170	194	#5	5"	8'- 8"	1,754	4'- 5"	4'- 3"
8'-0"	4'-0"	8"	7"	16'	194	#6	5"	8'-11"	2,598	194	#5	5"	8'- 9"	1,770	4'- 6"	4'- 3"
8'-0"	4'-0"	9"	8"	20'	194	#6	5"	9'- 1"	2,647	194	#5	5"	8'-10"	1,787	4'- 7"	4'- 3"
8'-0"	4'-0"	10"	8"	23'	194	#6	5"	9'- 1"	2,647	138	#6	7"	8'-11"	1,848	4'- 8"	4'- 3"
8'-0"	4'-0"	11"	9"	30'	162	#7	6"	9'- 3"	3,063	194	#5	5"	9'- 0"	1,821	4'- 9"	4'- 3"
8'-0"	5'-0"	7"	7"	13'	162	#6	6"	8'-11"	2,170	194	#5	5"	9'- 8"	1,956	5'- 5"	4'- 3"
8'-0"	5'-0"	8"	7"	16'	194	#6	5"	8'-11"	2,598	194	#5	5"	9'- 9"	1,973	5'- 6"	4'- 3"
8'-0"	5'-0"	9"	8"	20'	194	#6	5"	9'- 1"	2,647	194	#5	5"	9'-10"	1,990	5'- 7"	4'- 3"
8'-0"	5'-0"	10"	8"	23'	194	#6	5"	9'- 1"	2,647	194	#5	5"	9'-11"	2,007	5'- 8"	4'- 3"
8'-0"	5'-0"	11"	9"	30'	194	#7	5"	9'- 3"	3,668	194	#5	5"	10'- 0"	2,023	5'- 9"	4'- 3"
8'-0"	6'-0"	7"	7"	13'	194	#6	5"	8'-11"	2,598	162	#5	6"	10'- 8"	1,802	6'- 5"	4'- 3"
8'-0"	6'-0"	8"	7"	16'	194	#6	5"	8'-11"	2,598	194	#5	5"	10'- 9"	2,175	6'- 6"	4'- 3"
8'-0"	6'-0"	9"	8"	20'	194	#6	5"	9'- 1"	2,647	194	#5	5"	10'-10"	2,192	6'- 7"	4'- 3"
8'-0"	6'-0"	10"	8"	23'	194	#6	5"	9'- 1"	2,647	194	#5	5"	10'-11"	2,209	6'- 8"	4'- 3"
8'-0"	6'-0"	11"	9"	30'	194	#7	5"	9'- 3"	3,668	194	#5	5"	11'- 0"	2,226	6'- 9"	4'- 3"
8'-0"	7'-0"	7"	7"	13'	194	#6	5"	8'-11"	2,598	194	#5	5"	11'- 8"	2,361	7'- 5"	4'- 3"
8'-0"	7'-0"	8"	7"	16'	194	#6	5"	8'-11"	2,598	194	#5	5"	11'- 9"	2,378	7'- 6"	4'- 3"
8'-0"	7'-0"	9"	8"	20'	194	#6	5"	9'- 1"	2,647	194	#5	5"	11'-10"	2,394	7'- 7"	4'- 3"
8'-0"	7'-0"	10"	8"	23'	162	#7	6"	9'- 1"	3,008	194	#5	5"	11'-11"	2,411	7'- 8"	4'- 3"
8'-0"	7'-0"	11"	9"	30'	194	#7	5"	9'- 3"	3,668	194	#5	5"	12'- 0"	2,428	7'- 9"	4'- 3"
8'-0"	8'-0"	7"	7"	13'	194	#6	5"	8'-11"	2,598	194	#5	5"	12'- 8"	2,563	8'- 5"	4'- 3"
8'-0"	8'-0"	8"	7"	16'	194	#6	5"	8'-11"	2,598	194	#5	5"	12'- 9"	2,580	8'- 6"	4'- 3"
8'-0"	8'-0"	9"	8"	20'	194	#6	5"	9'- 1"	2,647	194	#5	5"	12'-10"	2,597	8'- 7"	4'- 3"
8'-0"	8'-0"	10"	8"	23'	162	#7	6"	9'- 1"	3,008	194	#5	5"	12'-11"	2,614	8'- 8"	4'- 3"
8'-0"	8'-0"	11"	9"	30'	194	#7	5"	9'- 3"	3,668	194	#5	5"	13'- 0"	2,630	8'- 9"	4'- 3"

FILL HEIGHT	Bars D No.	Size	Spa	Length	Weight	"Y"	"Z"	Bars E~#4 at 18" Max No.	Length	Wt	Bars F_1~#4 No.	Spa	Length	Wt	Bars F_2~#4 at 18" Max No.	Length	Wt	Bars H 4~#4 Length	Wt	Bars K No.	Wt
13'	194	#5	5"	6'-10"	1,383	4'- 3"	2'- 7"	56	4'-0"	150	13	7"	39'-9"	345	32	39'-9"	850	8'-11"	24	20	57
16'	194	#5	5"	6'-11"	1,400	4'- 3"	2'- 8"	56	4'-0"	150	6	18"	39'-9"	159	32	39'-9"	850	8'-11"	24	20	57
20'	194	#5	5"	7'- 0"	1,416	4'- 3"	2'- 9"	56	4'-0"	150	6	18"	39'-9"	159	32	39'-9"	850	9'- 1"	24	22	62
23'	138	#6	7"	7'- 6"	1,555	4'- 3"	3'- 3"	56	4'-0"	150	6	18"	39'-9"	159	32	39'-9"	850	9'- 1"	24	22	62
30'	194	#5	5"	7'- 2"	1,450	4'- 3"	2'-11"	56	4'-0"	150	6	18"	39'-9"	159	34	39'-9"	903	9'- 3"	25	22	62
13'	194	#5	5"	6'-10"	1,383	4'- 3"	2'- 7"	56	5'-0"	187	13	7"	39'-9"	345	36	39'-9"	956	8'-11"	24	20	57
16'	194	#5	5"	6'-11"	1,400	4'- 3"	2'- 8"	56	5'-0"	187	6	18"	39'-9"	159	36	39'-9"	956	8'-11"	24	20	57
20'	194	#5	5"	7'- 0"	1,416	4'- 3"	2'- 9"	56	5'-0"	187	6	18"	39'-9"	159	36	39'-9"	956	9'- 1"	24	22	62
23'	194	#5	5"	7'- 1"	1,433	4'- 3"	2'-10"	56	5'-0"	187	6	18"	39'-9"	159	36	39'-9"	956	9'- 1"	24	22	62
30'	194	#5	5"	7'- 2"	1,450	4'- 3"	2'-11"	56	5'-0"	187	6	18"	39'-9"	159	38	39'-9"	1,009	9'- 3"	25	22	62
13'	162	#5	6"	6'-10"	1,155	4'- 3"	2'- 7"	56	6'-0"	224	13	7"	39'-9"	345	40	39'-9"	1,062	8'-11"	24	20	57
16'	194	#5	5"	6'-11"	1,400	4'- 3"	2'- 8"	56	6'-0"	224	6	18"	39'-9"	159	40	39'-9"	1,062	8'-11"	24	20	57
20'	194	#5	5"	7'- 0"	1,416	4'- 3"	2'- 9"	56	6'-0"	224	6	18"	39'-9"	159	40	39'-9"	1,062	9'- 1"	24	22	62
23'	194	#5	5"	7'- 1"	1,433	4'- 3"	2'-10"	56	6'-0"	224	6	18"	39'-9"	159	40	39'-9"	1,062	9'- 1"	24	22	62
30'	194	#5	5"	7'- 2"	1,450	4'- 3"	2'-11"	56	6'-0"	224	6	18"	39'-9"	159	42	39'-9"	1,115	9'- 3"	25	22	62
13'	194	#5	5"	6'-10"	1,383	4'- 3"	2'- 7"	56	7'-0"	262	13	7"	39'-9"	345	40	39'-9"	1,062	8'-11"	24	20	57
16'	194	#5	5"	6'-11"	1,400	4'- 3"	2'- 8"	56	7'-0"	262	6	18"	39'-9"	159	40	39'-9"	1,062	8'-11"	24	20	57
20'	194	#5	5"	7'- 0"	1,416	4'- 3"	2'- 9"	56	7'-0"	262	6	18"	39'-9"	159	40	39'-9"	1,062	9'- 1"	24	22	62
23'	194	#5	5"	7'- 1"	1,433	4'- 3"	2'-10"	56	7'-0"	262	6	18"	39'-9"	159	40	39'-9"	1,062	9'- 1"	24	22	62
30'	194	#5	5"	7'- 2"	1,450	4'- 3"	2'-11"	56	7'-0"	262	6	18"	39'-9"	159	42	39'-9"	1,115	9'- 3"	25	22	62
13'	194	#5	5"	6'-10"	1,383	4'- 3"	2'- 7"	56	8'-0"	299	13	7"	39'-9"	345	44	39'-9"	1,168	8'-11"	24	20	57
16'	194	#5	5"	6'-11"	1,400	4'- 3"	2'- 8"	56	8'-0"	299	6	18"	39'-9"	159	44	39'-9"	1,168	8'-11"	24	20	57
20'	194	#5	5"	7'- 0"	1,416	4'- 3"	2'- 9"	56	8'-0"	299	6	18"	39'-9"	159	44	39'-9"	1,168	9'- 1"	24	22	62
23'	194	#5	5"	7'- 1"	1,433	4'- 3"	2'-10"	56	8'-0"	299	6	18"	39'-9"	159	44	39'-9"	1,168	9'- 1"	24	22	62
30'	194	#5	5"	7'- 2"	1,450	4'- 3"	2'-11"	56	8'-0"	299	6	18"	39'-9"	159	46	39'-9"	1,221	9'- 3"	25	22	62

QUANTITIES

FILL HEIGHT	Per foot of Barrel Conc (CY)	Reinf (Lb)	Curb Conc (CY)	Reinf (Lb)	Total Conc (CY)	Reinf (Lb)
13'	0.569	166.3	0.7	81	23.5	6,733
16'	0.626	173.2	0.7	81	25.7	7,008
20'	0.716	175.2	0.7	86	29.3	7,095
23'	0.774	180.2	0.7	86	31.7	7,295
30'	0.867	188.7	0.7	87	35.4	7,633
13'	0.612	174.9	0.7	81	25.2	7,078
16'	0.669	181.8	0.7	81	27.5	7,354
20'	0.765	183.9	0.7	86	31.3	7,441
23'	0.823	184.7	0.7	86	33.6	7,475
30'	0.923	212.4	0.7	87	37.6	8,583
13'	0.655	179.7	0.7	81	26.9	7,267
16'	0.712	190.5	0.7	81	29.2	7,699
20'	0.815	192.5	0.7	86	33.3	7,786
23'	0.872	193.4	0.7	86	35.6	7,820
30'	0.978	221.1	0.7	87	39.8	8,929
13'	0.699	200.3	0.7	81	28.7	8,092
16'	0.755	196.5	0.7	81	30.9	7,940
20'	0.864	198.5	0.7	86	35.3	8,026
23'	0.922	208.4	0.7	86	37.6	8,421
30'	1.034	227.1	0.7	87	42.1	9,169
13'	0.742	208.9	0.7	81	30.4	8,437
16'	0.798	205.1	0.7	81	32.6	8,285
20'	0.914	207.2	0.7	86	37.3	8,372
23'	0.971	217.0	0.7	86	39.5	8,767
30'	1.090	235.7	0.7	87	44.3	9,514

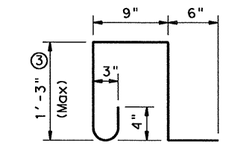

BARS K ~ #4
(Spa = 1'-0" Max)
(Length = 4'-3")

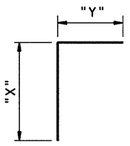

BARS C

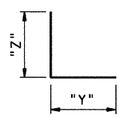

BARS D

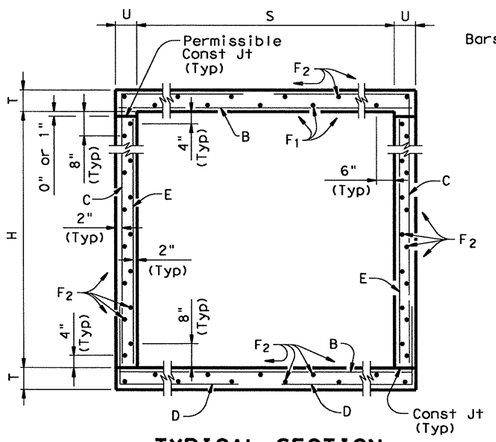

TYPICAL SECTION

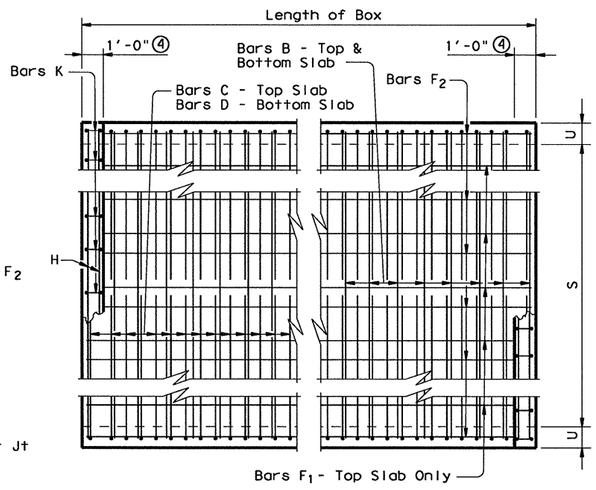

PLAN OF REINF STEEL

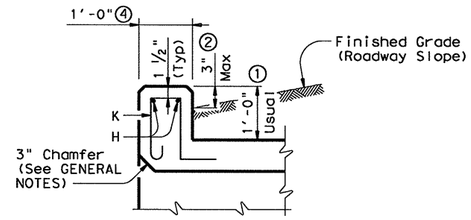

SECTION THRU CURB

① 0" min to 5'-0" max. Estimated curb heights are shown elsewhere in the plans. For structures with pedestrian rail, bicycle rail or curbs taller than 1'-0", refer to ECD standard. For structures with T6 bridge rail, refer to T6-CM standard. For structures with traffic rail, other than T6, refer to RAC standard.

② For vehicle safety, the following requirements must be met:
- For structures without bridge rail, curbs shall project no more than 3" above finished grade.
- For structures with bridge rail, curbs shall be flush with finished grade.

Curb heights shall be reduced, if necessary, to meet the above requirements. No changes will be made in quantities and no additional compensation will be allowed for this work.

③ For curbs less than 1'-0" high, tilt bars K or reduce bar height as necessary to maintain cover. For curbs less than 3" high, bars K may be omitted.

④ 1'-0" typical. 2'-0" when RAC standard is referred to elsewhere in the plans.

⑤ For each box size, minimum fill height shown shall be used for all culverts with less than 2'-0" of fill.

GENERAL NOTES:

Designed according to AASHTO LRFD Specifications.
Designed to the maximum fill heights shown.
All reinforcing steel shall be Grade 60.
All concrete shall be Class "C" with these exceptions: use Class "S" for top slabs of culverts with overlay, with 1-to-2 course surface treatment, or with the top slab as the final riding surface.
Class "C" concrete shall have a minimum compressive strength of 3,600 psi. Class "S" concrete shall have a minimum compressive strength of 4,000 psi.
The use of permanent forms is not allowed.
Reinforcing bars shall be adjusted to provide a minimum of 1 1/4 inches clear cover.
The bottom edge of the top slab shall be chamfered 3 inches at the entrance.
Construction joints shown at the flow line may be raised a maximum of 6 inches at the Contractor's option. If this option is used, Bars E may be cut off or raised, and Bars C and D may be reversed.
See Standard SCC-MD for skewed ends, angle sections and lengthening details.

HL93 LOADING

Texas Department of Transportation
Bridge Division

SINGLE BOX CULVERTS CAST-IN-PLACE 0' TO 30' FILL

SCC-8

FILE: scc08ste.dgn	DN: GAF	CK: LMW	DW: BWH/TxDOT	CK: GAF
©TxDOT February 2010	DISTRICT	STATE PROJECT NO.		SHEET
REVISIONS	18	(SEE TITLE SHEET		359
	COUNTY	CONTROL	SECT	JOB	HIGHWAY
	COLLIN	0091	04	055	SH 289

DISCLAIMER:
The use of this standard is governed by the "Texas Engineering Practice Act". No warranty of any kind is made by TxDOT for any purpose whatsoever. TxDOT assumes no responsibility for the conversion of this standard to other formats or for incorrect results or damages resulting from its use.

ACC: MTED LEVEL: 1

R-201104-01

BILLS OF REINFORCING STEEL (For Box Length = 40 feet)

NUMBER OF SPANS	SECTION DIMENSIONS S	H	T	U	Bars B No.	Size	Spa	Length	Wt	Bars C & D No.	Size	Spa	Bar C Length	Bar C Wt	Bar D Length	Bar D Wt	Bars E No.	Size	Spa	Length	Wt	Bars F_1 ~#4 No.	Spa	Length	Wt	Bars F_2 ~#4 at 1'-6" Max No.	Length	Wt	Bars M~#4 at 1'-6" Max No.	Length	Wt	Bars Y & Z~#4 at 10" Max No.	Bar Y Length	Bar Y Wt	Bar Z Length	Bar Z Wt	Bars H 4~#4 Length	Weight	Bars K No.	Weight	QUANTITIES Per foot of Barrel Conc (CY)	Reinf (Lb)	Curb Conc (CY)	Reinf (Lb)	Total Conc (CY)	Reinf (Lb)
2	8'-0"	4'-0"	8"	7"	162	#5	6"	17'- 6"	2,957	194	#4	5"	10'- 7"	1,372	8'- 4"	1,080	194	#6	5"	8'-10"	2,574	22	9"	39'-9"	584	56	39'-9"	1,487	56	4'- 0"	150	49	4'- 8"	153	9'- 2"	300	17'- 6"	47	38	108	1.136	266.4	1.3	155	46.7	10,812
3	8'-0"	4'-0"	8"	7"	162	#5	6"	26'- 1"	4,407	194	#4	5"	10'- 7"	1,372	8'- 4"	1,080	194	#6	5"	17'- 5"	5,075	36	8"	39'-9"	956	80	39'-9"	2,124	56	4'- 0"	150	98	4'- 8"	305	9'- 2"	600	26'- 1"	70	54	153	1.646	401.7	2.0	223	67.8	16,292
4	8'-0"	4'-0"	8"	7"	162	#5	6"	34'- 8"	5,857	194	#4	5"	10'- 7"	1,372	8'- 4"	1,080	194	#6	5"	26'- 0"	7,576	48	8"	39'-9"	1,275	104	39'-9"	2,762	56	4'- 0"	150	147	4'- 8"	458	9'- 2"	900	34'- 8"	93	72	204	2.156	535.8	2.6	297	88.8	21,727
5	8'-0"	4'-0"	8"	7"	162	#5	6"	43'- 3"	7,308	194	#4	5"	10'- 7"	1,372	8'- 4"	1,080	194	#6	5"	34'- 7"	10,077	60	8"	39'-9"	1,593	128	39'-9"	3,399	56	4'- 0"	150	196	4'- 8"	611	9'- 2"	1,200	43'- 3"	116	90	256	2.667	669.8	3.2	372	109.9	27,162
6	8'-0"	4'-0"	8"	7"	162	#5	6"	51'-10"	8,758	194	#4	5"	10'- 7"	1,372	8'- 4"	1,080	194	#6	5"	43'- 2"	12,578	72	8"	39'-9"	1,912	152	39'-9"	4,036	56	4'- 0"	150	245	4'- 8"	764	9'- 2"	1,500	51'-10"	138	106	301	3.177	803.8	3.9	439	131.0	32,589
2	8'-0"	5'-0"	8"	7"	194	#5	5"	17'- 6"	3,541	194	#4	5"	11'- 7"	1,501	8'- 4"	1,080	194	#6	5"	8'-10"	2,574	22	9"	39'-9"	584	62	39'-9"	1,646	56	5'- 0"	187	49	4'- 8"	153	11'- 2"	366	17'- 6"	47	38	108	1.201	290.8	1.3	155	49.3	11,787
3	8'-0"	5'-0"	8"	7"	194	#5	5"	26'- 1"	5,278	194	#4	5"	11'- 7"	1,501	8'- 4"	1,080	194	#6	5"	17'- 5"	5,075	36	8"	39'-9"	956	88	39'-9"	2,337	56	5'- 0"	187	98	4'- 8"	305	11'- 2"	731	26'- 1"	70	54	153	1.733	436.3	2.0	223	71.3	17,673
4	8'-0"	5'-0"	8"	7"	194	#5	5"	34'- 8"	7,015	194	#4	5"	11'- 7"	1,501	8'- 4"	1,080	194	#6	5"	26'- 0"	7,576	48	8"	39'-9"	1,275	114	39'-9"	3,027	56	5'- 0"	187	147	4'- 8"	458	11'- 2"	1,097	34'- 8"	93	72	204	2.264	580.4	2.6	297	93.2	23,513
5	8'-0"	5'-0"	8"	7"	194	#5	5"	43'- 3"	8,751	194	#4	5"	11'- 7"	1,501	8'- 4"	1,080	194	#6	5"	34'- 7"	10,077	60	8"	39'-9"	1,593	140	39'-9"	3,717	56	5'- 0"	187	196	4'- 8"	611	11'- 2"	1,462	43'- 3"	116	90	256	2.796	724.5	3.2	372	115.0	29,351
6	8'-0"	5'-0"	8"	7"	194	#5	5"	51'-10"	10,488	194	#4	5"	11'- 7"	1,501	8'- 4"	1,080	194	#6	5"	43'- 2"	12,578	72	8"	39'-9"	1,912	166	39'-9"	4,408	56	5'- 0"	187	245	4'- 8"	764	11'- 2"	1,828	51'-10"	138	106	301	3.328	868.7	3.9	439	137.0	35,185
2	8'-0"	6'-0"	8"	7"	194	#5	5"	17'- 6"	3,541	194	#4	5"	12'- 7"	1,631	8'- 4"	1,080	194	#6	5"	8'-10"	2,574	22	9"	39'-9"	584	68	39'-9"	1,806	56	6'- 0"	224	49	4'- 8"	153	13'- 2"	431	17'- 6"	47	38	108	1.265	300.6	1.3	155	51.9	12,179
3	8'-0"	6'-0"	8"	7"	194	#5	5"	26'- 1"	5,278	194	#4	5"	12'- 7"	1,631	8'- 4"	1,080	194	#6	5"	17'- 5"	5,075	36	8"	39'-9"	956	96	39'-9"	2,549	56	6'- 0"	224	98	4'- 8"	305	13'- 2"	862	26'- 1"	70	54	153	1.819	449.0	2.0	223	74.8	18,183
4	8'-0"	6'-0"	8"	7"	194	#5	5"	34'- 8"	7,015	194	#4	5"	12'- 7"	1,631	8'- 4"	1,080	194	#6	5"	26'- 0"	7,576	48	8"	39'-9"	1,275	124	39'-9"	3,293	56	6'- 0"	224	147	4'- 8"	458	13'- 2"	1,293	34'- 8"	93	72	204	2.372	596.1	2.6	297	97.5	24,142
5	8'-0"	6'-0"	8"	7"	194	#5	5"	43'- 3"	8,751	194	#4	5"	12'- 7"	1,631	8'- 4"	1,080	194	#6	5"	34'- 7"	10,077	60	8"	39'-9"	1,593	152	39'-9"	4,036	56	6'- 0"	224	196	4'- 8"	611	13'- 2"	1,724	43'- 3"	116	90	256	2.926	743.2	3.2	372	120.2	30,099
6	8'-0"	6'-0"	8"	7"	194	#5	5"	51'-10"	10,488	194	#4	5"	12'- 7"	1,631	8'- 4"	1,080	194	#6	5"	43'- 2"	12,578	72	8"	39'-9"	1,912	180	39'-9"	4,780	56	6'- 0"	224	245	4'- 8"	764	13'- 2"	2,155	51'-10"	138	106	301	3.479	890.3	3.9	439	143.1	36,051
2	8'-0"	7'-0"	8"	7"	194	#5	5"	17'- 6"	3,541	194	#4	5"	13'- 7"	1,760	8'- 4"	1,080	194	#6	5"	8'-10"	2,574	22	9"	39'-9"	584	68	39'-9"	1,806	56	7'- 0"	262	49	4'- 8"	153	15'- 2"	496	17'- 6"	47	38	108	1.330	306.4	1.3	155	54.5	12,411
3	8'-0"	7'-0"	8"	7"	194	#5	5"	26'- 1"	5,278	194	#4	5"	13'- 7"	1,760	8'- 4"	1,080	194	#6	5"	17'- 5"	5,075	36	8"	39'-9"	956	96	39'-9"	2,549	56	7'- 0"	262	98	4'- 8"	305	15'- 2"	993	26'- 1"	70	54	153	1.905	456.5	2.0	223	78.2	18,481
4	8'-0"	7'-0"	8"	7"	194	#5	5"	34'- 8"	7,015	194	#4	5"	13'- 7"	1,760	8'- 4"	1,080	194	#6	5"	26'- 0"	7,576	48	8"	39'-9"	1,275	124	39'-9"	3,293	56	7'- 0"	262	147	4'- 8"	458	15'- 2"	1,489	34'- 8"	93	72	204	2.480	605.2	2.6	297	101.8	24,505
5	8'-0"	7'-0"	8"	7"	194	#5	5"	43'- 3"	8,751	194	#4	5"	13'- 7"	1,760	8'- 4"	1,080	194	#6	5"	34'- 7"	10,077	60	8"	39'-9"	1,593	152	39'-9"	4,036	56	7'- 0"	262	196	4'- 8"	611	15'- 2"	1,986	43'- 3"	116	90	256	3.056	753.9	3.2	372	125.4	30,528
6	8'-0"	7'-0"	8"	7"	194	#5	5"	51'-10"	10,488	194	#4	5"	13'- 7"	1,760	8'- 4"	1,080	194	#6	5"	43'- 2"	12,578	72	8"	39'-9"	1,912	180	39'-9"	4,780	56	7'- 0"	262	245	4'- 8"	764	15'- 2"	2,482	51'-10"	138	106	301	3.631	902.7	3.9	439	149.1	36,545
2	8'-0"	8'-0"	8"	7"	194	#5	5"	17'- 6"	3,541	162	#5	6"	14'- 7"	2,464	8'- 9"	1,478	194	#6	5"	8'-10"	2,574	22	9"	39'-9"	584	74	39'-9"	1,965	56	8'- 0"	299	49	4'- 8"	153	17'- 2"	562	17'- 6"	47	38	108	1.395	340.5	1.3	155	57.1	13,775
3	8'-0"	8'-0"	8"	7"	194	#5	5"	26'- 1"	5,278	162	#5	6"	14'- 7"	2,464	8'- 9"	1,478	194	#6	5"	17'- 5"	5,075	36	8"	39'-9"	956	104	39'-9"	2,762	56	8'- 0"	299	98	4'- 8"	305	17'- 2"	1,124	26'- 1"	70	54	153	1.992	493.5	2.0	223	81.7	19,964
4	8'-0"	8'-0"	8"	7"	194	#5	5"	34'- 8"	7,015	162	#5	6"	14'- 7"	2,464	8'- 9"	1,478	194	#6	5"	26'- 0"	7,576	48	8"	39'-9"	1,275	134	39'-9"	3,558	56	8'- 0"	299	147	4'- 8"	458	17'- 2"	1,686	34'- 8"	93	72	204	2.588	645.2	2.6	297	106.1	26,106
5	8'-0"	8'-0"	8"	7"	194	#5	5"	43'- 3"	8,751	162	#5	6"	14'- 7"	2,464	8'- 9"	1,478	194	#6	5"	34'- 7"	10,077	60	8"	39'-9"	1,593	164	39'-9"	4,355	56	8'- 0"	299	196	4'- 8"	611	17'- 2"	2,248	43'- 3"	116	90	256	3.185	796.9	3.2	372	130.6	32,248
6	8'-0"	8'-0"	8"	7"	194	#5	5"	51'-10"	10,488	162	#5	6"	14'- 7"	2,464	8'- 9"	1,478	194	#6	5"	43'- 2"	12,578	72	8"	39'-9"	1,912	194	39'-9"	5,151	56	8'- 0"	299	245	4'- 8"	764	17'- 2"	2,809	51'-10"	138	106	301	3.782	948.6	3.9	439	155.2	38,382

H	Bar Dimensions "X"	"Y"
4'-0"	4'-6"	2'-3"
5'-0"	5'-6"	2'-3"
6'-0"	6'-6"	2'-3"
7'-0"	7'-6"	2'-3"
8'-0"	8'-6"	2'-8"

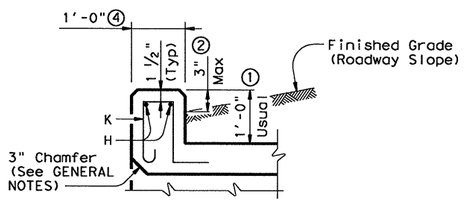

SECTION THRU CURB

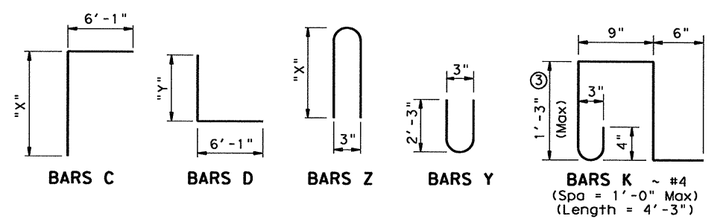

BARS C BARS D BARS Z BARS Y BARS K ~ #4 (Spa = 1'-0" Max) (Length = 4'-3")

GENERAL NOTES:

Designed according to AASHTO LRFD Specifications.
Designed to the maximum fill height shown.
All reinforcing steel shall be Grade 60.
All concrete shall be Class "C" with these exceptions: use Class "S" for top slabs of culverts with overlay, with 1-to-2 course surface treatment, or with the top slab as the final riding surface.
Class "C" concrete shall have a minimum compressive strength of 3,600 psi.
Class "S" concrete shall have a minimum compressive strength of 4,000 psi.
The use of permanent forms is not allowed.
The bottom edge of the top slab shall be chamfered 3" at the entrance.
Reinforcing bars shall be adjusted to provide a minimum of 1 1/4" clear cover.
Construction joints shown at the flow line may be raised a maximum of 6" at the Contractor's option. If this option is used, Bars M may be cut off or raised, Bars C and D may be reversed, and Bars Y and Z may be reversed.
See standard MC-MD for skewed ends, angle sections and lengthening details.

① 0" min to 5'-0" max. Estimated curb heights are shown elsewhere in the plans. For structures with pedestrian rail, bicycle rail or curbs taller than 1'-0", refer to ECD standard. For structures with T6 bridge rail, refer to T6-CM standard. For structures with traffic rail, other than T6, refer to RAC standard.

② For vehicle safety, the following requirements must be met:
- For structures without bridge rail, curbs shall project no more than 3" above finished grade.
- For structures with bridge rail, curbs shall be flush with finished grade.

Curb heights shall be reduced, if necessary, to meet the above requirements. No changes will be made in quantities and no additional compensation will be allowed for this work.

③ For curbs less than 1'-0" high, tilt bars K or reduce bar height as necessary to maintain cover. For curbs less than 3" high, bars K may be omitted.

④ 1'-0" typical. 2'-0" when RAC standard is referred to elsewhere in the plans.

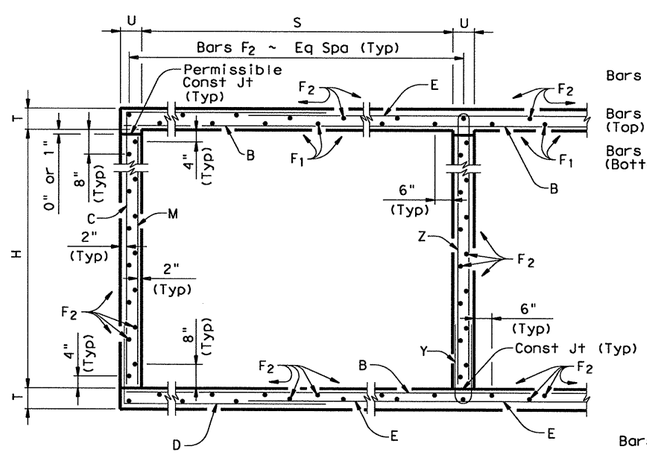

TYPICAL SECTION

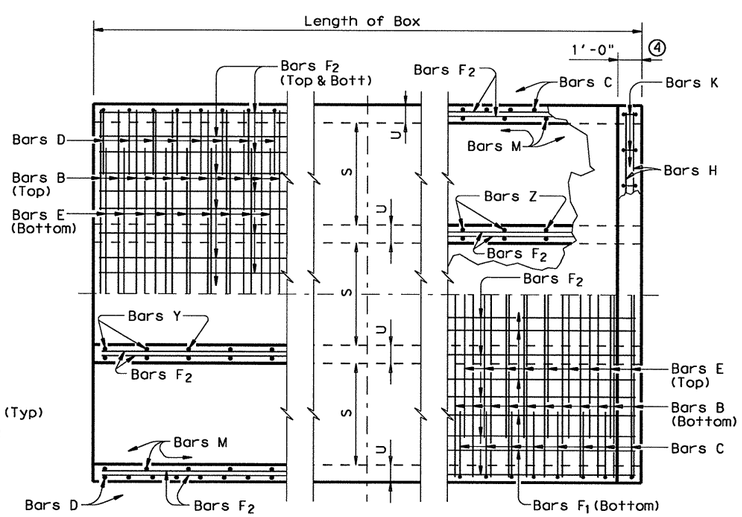

BOTTOM SLAB PART PLANS TOP SLAB

HL93 LOADING

Texas Department of Transportation
Bridge Division

MULTIPLE BOX CULVERTS CAST-IN-PLACE 8'-0" SPAN 0' TO 13' FILL

MC-8-13

FILE: mc813ste.dgn	DN: GAF	CK: LMW	DW: BWH/TxDOT	CK: GAF
©TxDOT February 2010	DISTRICT	STATE PROJECT NO.		SHEET
REVISIONS	18	(SEE TITLE SHEET)		3100
	COUNTY	CONTROL	SECT	JOB	HIGHWAY
	COLLIN	0091	04	055	SH 289

DISCLAIMER:
The use of this standard is governed by the "Texas Engineering Practice Act". No warranty of any kind is made by TxDOT for any purpose whatsoever. TxDOT assumes no responsibility for the accuracy of this standard to other formats or for incorrect results or damages resulting from its use.

ACC:
LEVELS ATED
1

R-201104-01

BOX DATA

SECTION DIMENSIONS S (ft)	H (ft)	T_T (in)	T_B (in)	T_S (in)	Fill Height (ft)	M (Min) (in)	REINFORCING (in²/ft) ② A_{S1}	A_{S2}	A_{S3}	A_{S4}	A_{S5}	A_{S6}	A_{S7}	A_{S8}	① Lift Weight (Tons)
9	5	9	9	9	<2	-	0.28	0.38	0.31	0.22	0.22	0.22	0.22	0.22	14.6
9	5	9	9	9	2<3	54	0.32	0.38	0.34	0.22	-	-	-	-	14.6
9	5	9	9	9	3-5	49	0.25	0.30	0.30	0.22	-	-	-	-	14.6
9	5	9	9	9	10	49	0.28	0.33	0.34	0.22	-	-	-	-	14.6
9	5	9	9	9	15	44	0.36	0.43	0.45	0.22	-	-	-	-	14.6
9	5	9	9	9	20	44	0.47	0.56	0.57	0.22	-	-	-	-	14.6
9	5	9	9	9	25	44	0.58	0.69	0.71	0.22	-	-	-	-	14.6
9	6	9	9	9	<2	-	0.25	0.40	0.34	0.22	0.22	0.22	0.22	0.22	15.5
9	6	9	9	9	2<3	54	0.29	0.41	0.38	0.22	-	-	-	-	15.5
9	6	9	9	9	3-5	49	0.23	0.33	0.33	0.22	-	-	-	-	15.5
9	6	9	9	9	10	49	0.26	0.35	0.37	0.22	-	-	-	-	15.5
9	6	9	9	9	15	44	0.33	0.46	0.48	0.22	-	-	-	-	15.5
9	6	9	9	9	20	44	0.42	0.60	0.61	0.22	-	-	-	-	15.5
9	6	9	9	9	25	44	0.52	0.74	0.75	0.22	-	-	-	-	15.5
9	7	9	9	9	<2	-	0.23	0.42	0.36	0.22	0.22	0.22	0.22	0.22	16.4
9	7	9	9	9	2<3	59	0.26	0.44	0.41	0.22	-	-	-	-	16.4
9	7	9	9	9	3-5	54	0.22	0.35	0.35	0.22	-	-	-	-	16.4
9	7	9	9	9	10	49	0.24	0.37	0.39	0.22	-	-	-	-	16.4
9	7	9	9	9	15	44	0.31	0.48	0.51	0.22	-	-	-	-	16.4
9	7	9	9	9	20	44	0.39	0.62	0.65	0.22	-	-	-	-	16.4
9	8	9	9	9	<2	-	0.22	0.43	0.39	0.22	0.22	0.22	0.22	0.22	17.3
9	8	9	9	9	2<3	59	0.24	0.46	0.43	0.22	-	-	-	-	17.3
9	8	9	9	9	3-5	59	0.22	0.37	0.38	0.22	-	-	-	-	17.3
9	8	9	9	9	10	54	0.22	0.39	0.41	0.22	-	-	-	-	17.3
9	8	9	9	9	15	44	0.29	0.50	0.53	0.22	-	-	-	-	17.3
9	8	9	9	9	20	44	0.36	0.64	0.67	0.22	-	-	-	-	17.3
9	9	9	9	9	<2	-	0.22	0.44	0.42	0.22	0.22	0.22	0.22	0.22	18.2
9	9	9	9	9	2<3	72	0.23	0.49	0.46	0.22	-	-	-	-	18.2
9	9	9	9	9	3-5	72	0.22	0.39	0.40	0.22	-	-	-	-	18.2
9	9	9	9	9	10	59	0.22	0.40	0.43	0.22	-	-	-	-	18.2
9	9	9	9	9	15	49	0.27	0.51	0.55	0.22	-	-	-	-	18.2
9	9	9	9	9	20	49	0.34	0.66	0.69	0.22	-	-	-	-	18.2

① For Box Length = 8'-0"

② A_{S1} thru A_{S4}, A_{S7} and A_{S8} are minimum required areas of reinforcement per linear foot of box length. A_{S6} and A_{S5} are minimum required areas of reinforcement per linear foot of box width.

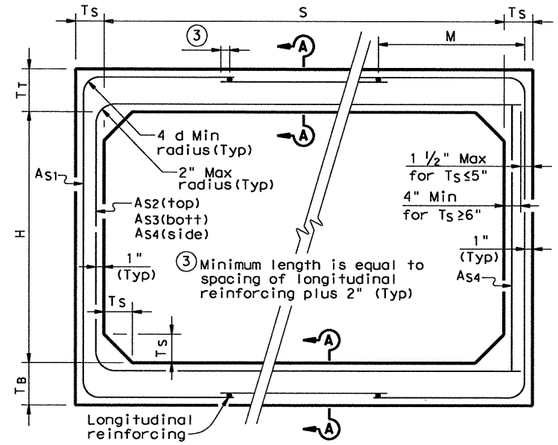

CORNER OPTION "A" CORNER OPTION "B"

FILL HEIGHT 2 FT AND GREATER

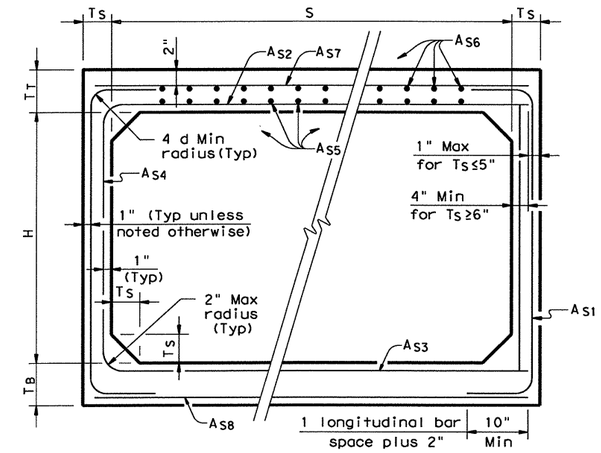

CORNER OPTION "A" CORNER OPTION "B"

FILL HEIGHT LESS THAN 2 FT

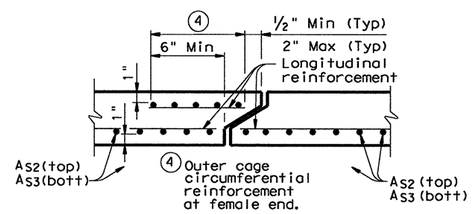

SECTION A-A

(TOP AND BOTTOM SLAB JOINT REINFORCEMENT)

GENERAL NOTES:

Designs shown conform to ASTM C1577.

Refer to ASTM C1577 for information or details not shown.

All concrete shall be Class "H" Concrete with a minimum compressive strength of 5,000 psi.

See SCP-MD standard sheet for miscellaneous details and notes not shown.

In lieu of furnishing the designs shown on this sheet, the contractor may furnish an alternate design that is equal to or exceeds the box design for the design fill height in the table. Shop plans for alternate designs shall be submitted in accordance with Item "Precast Concrete Structures".

HL93 LOADING

Texas Department of Transportation
Bridge Division

SINGLE BOX CULVERTS PRECAST
9'-0" SPAN

SCP-9

FILE: scp09ste.dgn	DN: GAF	CK: LMW	DW: BWH/TxDOT	CK: GAF
© TxDOT February 2010	DISTRICT	STATE PROJECT NO.		SHEET
REVISIONS	18	(SEE TITLE SHEET		361
	COUNTY		CONTROL SECT JOB	HIGHWAY
	COLLIN		0091 04 055	SH 289

DISCLAIMER:
The use of this standard is governed by the "Texas Engineering Practice Act". No warranty of any kind is made by TxDOT for any purpose whatsoever. TxDOT assumes no responsibility for the conversion of this standard to other formats or for incorrect results or damages resulting from its use.

LEVELS V... ...ATED ACC:

R-201104-01

BILLS OF REINFORCING STEEL (For Box Length = 40 feet)

NUMBER OF SPANS	SECTION DIMENSIONS S	H	T	U	Bars B No.	Size	Spa	Length	Wt	Bars C & D No.	Size	Spa	Bar C Length	Bar C Wt	Bar D Length	Bar D Wt	Bars E No.	Size	Spa	Length	Wt
2	9'-0"	5'-0"	8"	7"	194	#5	5"	19'- 6"	3,946	194	#4	5"	13'- 0"	1,685	9'- 9"	1,264	194	#6	5"	8'-10"	2,574
3	9'-0"	5'-0"	8"	7"	194	#5	5"	29'- 1"	5,885	194	#4	5"	13'- 0"	1,685	9'- 9"	1,264	194	#6	5"	18'- 5"	5,366
4	9'-0"	5'-0"	8"	7"	194	#5	5"	38'- 8"	7,824	194	#4	5"	13'- 0"	1,685	9'- 9"	1,264	194	#6	5"	28'- 0"	8,159
5	9'-0"	5'-0"	8"	7"	194	#5	5"	48'- 3"	9,763	194	#4	5"	13'- 0"	1,685	9'- 9"	1,264	194	#6	5"	37'- 7"	10,951
6	9'-0"	5'-0"	8"	7"	194	#5	5"	57'-10"	11,702	194	#4	5"	13'- 0"	1,685	9'- 9"	1,264	194	#6	5"	47'- 2"	13,744
2	9'-0"	6'-0"	8"	7"	194	#5	5"	19'- 6"	3,946	194	#4	5"	14'- 0"	1,814	9'- 9"	1,264	194	#6	5"	8'-10"	2,574
3	9'-0"	6'-0"	8"	7"	194	#5	5"	29'- 1"	5,885	194	#4	5"	14'- 0"	1,814	9'- 9"	1,264	194	#6	5"	18'- 5"	5,366
4	9'-0"	6'-0"	8"	7"	194	#5	5"	38'- 8"	7,824	194	#4	5"	14'- 0"	1,814	9'- 9"	1,264	194	#6	5"	28'- 0"	8,159
5	9'-0"	6'-0"	8"	7"	194	#5	5"	48'- 3"	9,763	194	#4	5"	14'- 0"	1,814	9'- 9"	1,264	194	#6	5"	37'- 7"	10,951
6	9'-0"	6'-0"	8"	7"	194	#5	5"	57'-10"	11,702	194	#4	5"	14'- 0"	1,814	9'- 9"	1,264	194	#6	5"	47'- 2"	13,744
2	9'-0"	7'-0"	8"	7"	194	#5	5"	19'- 6"	3,946	162	#5	6"	15'- 0"	2,534	10'- 2"	1,718	194	#6	5"	8'-10"	2,574
3	9'-0"	7'-0"	8"	7"	194	#5	5"	29'- 1"	5,885	162	#5	6"	15'- 0"	2,534	10'- 2"	1,718	194	#6	5"	18'- 5"	5,366
4	9'-0"	7'-0"	8"	7"	194	#5	5"	38'- 8"	7,824	162	#5	6"	15'- 0"	2,534	10'- 2"	1,718	194	#6	5"	28'- 0"	8,159
5	9'-0"	7'-0"	8"	7"	194	#5	5"	48'- 3"	9,763	162	#5	6"	15'- 0"	2,534	10'- 2"	1,718	194	#6	5"	37'- 7"	10,951
6	9'-0"	7'-0"	8"	7"	194	#5	5"	57'-10"	11,702	162	#5	6"	15'- 0"	2,534	10'- 2"	1,718	194	#6	5"	47'- 2"	13,744
2	9'-0"	8'-0"	8"	7"	194	#5	5"	19'- 6"	3,946	162	#5	6"	16'- 0"	2,703	10'- 2"	1,718	194	#6	5"	8'-10"	2,574
3	9'-0"	8'-0"	8"	7"	194	#5	5"	29'- 1"	5,885	162	#5	6"	16'- 0"	2,703	10'- 2"	1,718	194	#6	5"	18'- 5"	5,366
4	9'-0"	8'-0"	8"	7"	194	#5	5"	38'- 8"	7,824	162	#5	6"	16'- 0"	2,703	10'- 2"	1,718	194	#6	5"	28'- 0"	8,159
5	9'-0"	8'-0"	8"	7"	194	#5	5"	48'- 3"	9,763	162	#5	6"	16'- 0"	2,703	10'- 2"	1,718	194	#6	5"	37'- 7"	10,951
6	9'-0"	8'-0"	8"	7"	194	#5	5"	57'-10"	11,702	162	#5	6"	16'- 0"	2,703	10'- 2"	1,718	194	#6	5"	47'- 2"	13,744
2	9'-0"	9'-0"	8"	7"	194	#5	5"	19'- 6"	3,946	194	#5	5"	17'- 0"	3,440	10'- 2"	2,057	194	#6	5"	8'-10"	2,574
3	9'-0"	9'-0"	8"	7"	194	#5	5"	29'- 1"	5,885	194	#5	5"	17'- 0"	3,440	10'- 2"	2,057	194	#6	5"	18'- 5"	5,366
4	9'-0"	9'-0"	8"	7"	194	#5	5"	38'- 8"	7,824	194	#5	5"	17'- 0"	3,440	10'- 2"	2,057	194	#6	5"	28'- 0"	8,159
5	9'-0"	9'-0"	8"	7"	194	#5	5"	48'- 3"	9,763	194	#5	5"	17'- 0"	3,440	10'- 2"	2,057	194	#6	5"	37'- 7"	10,951
6	9'-0"	9'-0"	8"	7"	194	#5	5"	57'-10"	11,702	194	#5	5"	17'- 0"	3,440	10'- 2"	2,057	194	#6	5"	47'- 2"	13,744

NUMBER OF SPANS	Bars F_1 ~#4 No.	Spa	Length	Wt	Bars F_2 ~#4 at 1'-6" Max No.	Length	Wt	Bars M~#4 at 1'-6" Max No.	Length	Wt	Bars Y & Z~#4 at 9" Max No.	Bar Y Length	Bar Y Wt	Bar Z Length	Bar Z Wt	Bars H 4~#4 Length	Weight	Bars K No.	Weight
2	24	9"	39'-9"	637	68	39'-9"	1,806	56	5'- 0"	187	54	4'- 8"	168	11'- 2"	403	19'- 6"	52	42	119
3	36	9"	39'-9"	956	97	39'-9"	2,576	56	5'- 0"	187	108	4'- 8"	337	11'- 2"	806	29'- 1"	78	60	170
4	48	9"	39'-9"	1,275	126	39'-9"	3,346	56	5'- 0"	187	162	4'- 8"	505	11'- 2"	1,208	38'- 8"	103	80	227
5	60	9"	39'-9"	1,593	155	39'-9"	4,116	56	5'- 0"	187	216	4'- 8"	673	11'- 2"	1,611	48'- 3"	129	100	284
6	72	9"	39'-9"	1,912	184	39'-9"	4,886	56	5'- 0"	187	270	4'- 8"	842	11'- 2"	2,014	57'-10"	155	118	335
2	24	9"	39'-9"	637	74	39'-9"	1,965	56	6'- 0"	224	54	4'- 8"	168	13'- 2"	475	19'- 6"	52	42	119
3	36	9"	39'-9"	956	105	39'-9"	2,788	56	6'- 0"	224	108	4'- 8"	337	13'- 2"	950	29'- 1"	78	60	170
4	48	9"	39'-9"	1,275	136	39'-9"	3,611	56	6'- 0"	224	162	4'- 8"	505	13'- 2"	1,425	38'- 8"	103	80	227
5	60	9"	39'-9"	1,593	167	39'-9"	4,434	56	6'- 0"	224	216	4'- 8"	673	13'- 2"	1,900	48'- 3"	129	100	284
6	72	9"	39'-9"	1,912	198	39'-9"	5,257	56	6'- 0"	224	270	4'- 8"	842	13'- 2"	2,375	57'-10"	155	118	335
2	24	9"	39'-9"	637	74	39'-9"	1,965	56	7'- 0"	262	54	4'- 8"	168	15'- 2"	547	19'- 6"	52	42	119
3	36	9"	39'-9"	956	105	39'-9"	2,788	56	7'- 0"	262	108	4'- 8"	337	15'- 2"	1,094	29'- 1"	78	60	170
4	48	9"	39'-9"	1,275	136	39'-9"	3,611	56	7'- 0"	262	162	4'- 8"	505	15'- 2"	1,641	38'- 8"	103	80	227
5	60	9"	39'-9"	1,593	167	39'-9"	4,434	56	7'- 0"	262	216	4'- 8"	673	15'- 2"	2,188	48'- 3"	129	100	284
6	72	9"	39'-9"	1,912	198	39'-9"	5,257	56	7'- 0"	262	270	4'- 8"	842	15'- 2"	2,735	57'-10"	155	118	335
2	24	9"	39'-9"	637	80	39'-9"	2,124	56	8'- 0"	299	54	4'- 8"	168	17'- 2"	619	19'- 6"	52	42	119
3	36	9"	39'-9"	956	113	39'-9"	3,000	56	8'- 0"	299	108	4'- 8"	337	17'- 2"	1,238	29'- 1"	78	60	170
4	48	9"	39'-9"	1,275	146	39'-9"	3,877	56	8'- 0"	299	162	4'- 8"	505	17'- 2"	1,858	38'- 8"	103	80	227
5	60	9"	39'-9"	1,593	179	39'-9"	4,753	56	8'- 0"	299	216	4'- 8"	673	17'- 2"	2,477	48'- 3"	129	100	284
6	72	9"	39'-9"	1,912	212	39'-9"	5,629	56	8'- 0"	299	270	4'- 8"	842	17'- 2"	3,096	57'-10"	155	118	335
2	24	9"	39'-9"	637	86	39'-9"	2,284	56	9'- 0"	337	54	4'- 8"	168	19'- 2"	691	19'- 6"	52	42	119
3	36	9"	39'-9"	956	121	39'-9"	3,213	56	9'- 0"	337	108	4'- 8"	337	19'- 2"	1,383	29'- 1"	78	60	170
4	48	9"	39'-9"	1,275	156	39'-9"	4,142	56	9'- 0"	337	162	4'- 8"	505	19'- 2"	2,074	38'- 8"	103	80	227
5	60	9"	39'-9"	1,593	191	39'-9"	5,072	56	9'- 0"	337	216	4'- 8"	673	19'- 2"	2,766	48'- 3"	129	100	284
6	72	9"	39'-9"	1,912	226	39'-9"	6,001	56	9'- 0"	337	270	4'- 8"	842	19'- 2"	3,457	57'-10"	155	118	335

QUANTITIES

NUMBER OF SPANS	Per foot of Barrel Conc (CY)	Reinf (Lb)	Curb Conc (CY)	Reinf (Lb)	Total Conc (CY)	Reinf (Lb)
2	1.299	316.8	1.5	171	53.5	12,841
3	1.881	476.6	2.2	248	77.4	19,310
4	2.462	636.3	2.9	330	101.4	25,783
5	3.043	796.1	3.6	413	125.3	32,256
6	3.624	955.9	4.3	490	149.3	38,726
2	1.364	326.7	1.5	171	56.1	13,238
3	1.967	489.6	2.2	248	80.9	19,832
4	2.570	652.5	2.9	330	105.7	26,431
5	3.173	815.4	3.6	413	130.5	33,029
6	3.776	978.4	4.3	490	155.3	39,624
2	1.429	358.8	1.5	171	58.7	14,522
3	2.053	523.5	2.2	248	84.3	21,188
4	2.678	688.2	2.9	330	110.0	27,859
5	3.302	852.9	3.6	413	135.7	34,529
6	3.927	1,017.7	4.3	490	161.4	41,196
2	1.494	369.7	1.5	171	61.3	14,959
3	2.140	537.6	2.2	248	87.8	21,750
4	2.786	705.5	2.9	330	114.3	28,548
5	3.432	873.3	3.6	413	140.9	35,343
6	4.078	1,041.1	4.3	490	167.4	42,135
2	1.559	403.4	1.5	171	63.9	16,305
3	2.226	574.4	2.2	248	91.2	23,222
4	2.894	745.3	2.9	330	118.7	30,143
5	3.562	916.3	3.6	413	146.1	37,065
6	4.229	1,087.3	4.3	490	173.5	43,982

H	Bar Dimensions "X"	"Y"
5'-0"	5'-6"	2'- 3"
6'-0"	6'-6"	2'- 3"
7'-0"	7'-6"	2'- 8"
8'-0"	8'-6"	2'- 8"
9'-0"	9'-6"	2'- 8"

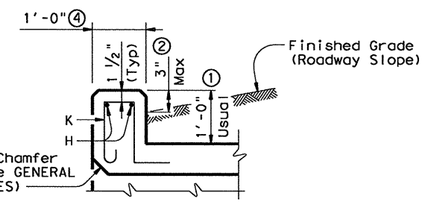

SECTION THRU CURB

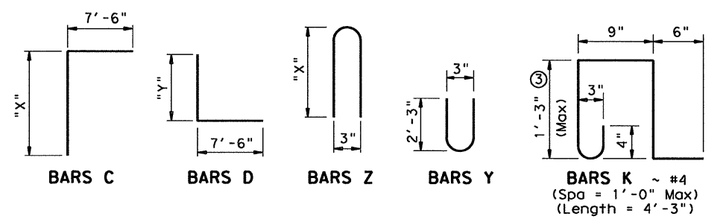

BARS C BARS D BARS Z BARS Y BARS K ~ #4 (Spa = 1'-0" Max) (Length = 4'-3")

GENERAL NOTES:

Designed according to AASHTO LRFD Specifications.
Designed to the maximum fill height shown.
All reinforcing steel shall be Grade 60.
All concrete shall be Class "C" with these exceptions: use Class "S" for top slabs of culverts with overlay, with 1-to-2 course surface treatment, or with the top slab as the final riding surface.
Class "C" concrete shall have a minimum compressive strength of 3,600 psi.
Class "S" concrete shall have a minimum compressive strength of 4,000 psi.
The use of permanent forms is not allowed.
The bottom edge of the top slab shall be chamfered 3" at the entrance.
Reinforcing bars shall be adjusted to provide a minimum of 1 1/4" clear cover.
Construction joints shown at the flow line may be raised a maximum of 6" at the Contractor's option. If this option is used, Bars M may be cut off or raised, Bars C and D may be reversed, and Bars Y and Z may be reversed.
See standard MC-MD for skewed ends, angle sections and lengthening details.

① 0" min to 5'-0" max. Estimated curb heights are shown elsewhere in the plans. For structures with pedestrian rail, bicycle rail or curbs taller than 1'-0", refer to ECD standard. For structures with T6 bridge rail, refer to T6-CM standard. For structures with traffic rail, other than T6, refer to RAC standard.

② For vehicle safety, the following requirements must be met:
- For structures without bridge rail, curbs shall project no more than 3" above finished grade.
- For structures with bridge rail, curbs shall be flush with finished grade.

Curb heights shall be reduced, if necessary, to meet the above requirements. No changes will be made in quantities and no additional compensation will be allowed for this work.

③ For curbs less than 1'-0" high, tilt bars K or reduce bar height as necessary to maintain cover. For curbs less than 3" high, bars K may be omitted.

④ 1'-0" typical. 2'-0" when RAC standard is referred to elsewhere in the plans.

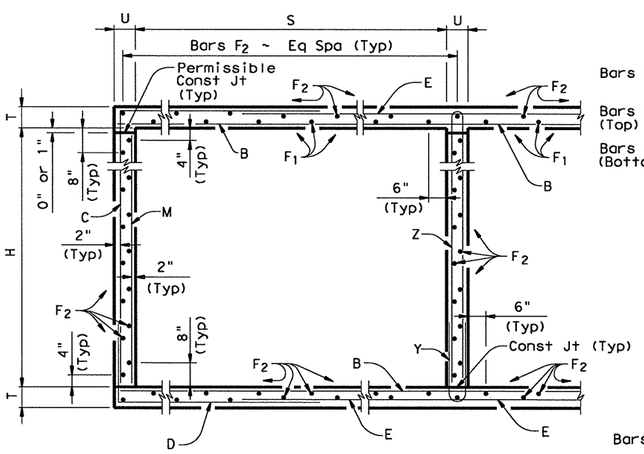

TYPICAL SECTION

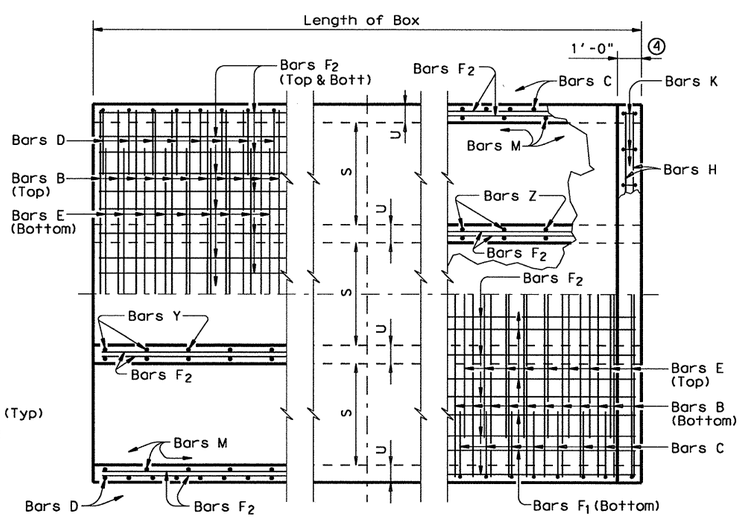

BOTTOM SLAB PART PLANS TOP SLAB

HL93 LOADING

Texas Department of Transportation
Bridge Division

MULTIPLE BOX CULVERTS CAST-IN-PLACE 9'-0" SPAN 0' TO 10' FILL

MC-9-10

FILE: mc910ste.dgn	DN: GAF	CK: LMW	DW: BWH/TxDOT	CK: GAF
©TxDOT February 2010	DISTRICT	STATE PROJECT NO.		SHEET
REVISIONS	18	(SEET TITLE SHEET)		302
	COUNTY		CONTROL SECT JOB	HIGHWAY
	COLLIN		0091 04 055	SH 289

DISCLAIMER:
The use of this standard is governed by the "Texas Engineering Practice Act". No warranty of any kind is made by TxDOT for any purpose whatsoever. TxDOT assumes no responsibility for the conversion of this standard to other formats or for incorrect results or damages resulting from its use.

ACC:
LEVELS
1

R-201104-01

BOX DATA

SECTION DIMENSIONS S (ft)	H (ft)	T_T (in)	T_B (in)	T_S (in)	Fill Height (ft)	M (Min) (in)	REINFORCING (in²/ft) ② A_{S1}	A_{S2}	A_{S3}	A_{S4}	A_{S5}	A_{S6}	A_{S7}	A_{S8}	① Lift Weight (Tons)
10	5	10	10	10	<2	-	0.30	0.36	0.30	0.24	0.24	0.24	0.24	0.24	17.5
10	5	10	10	10	2<3	58	0.35	0.39	0.34	0.24	-	-	-	-	17.5
10	5	10	10	10	3-5	53	0.28	0.31	0.30	0.24	-	-	-	-	17.5
10	5	10	10	10	10	52	0.33	0.35	0.36	0.24	-	-	-	-	17.5
10	5	10	10	10	15	47	0.42	0.46	0.47	0.24	-	-	-	-	17.5
10	5	10	10	10	20	47	0.55	0.59	0.61	0.24	-	-	-	-	17.5
10	5	10	10	10	25	47	0.68	0.73	0.75	0.24	-	-	-	-	17.5
10	6	10	10	10	<2	-	0.28	0.38	0.33	0.24	0.24	0.24	0.24	0.24	18.5
10	6	10	10	10	2<3	58	0.32	0.42	0.37	0.24	-	-	-	-	18.5
10	6	10	10	10	3-5	52	0.26	0.34	0.33	0.24	-	-	-	-	18.5
10	6	10	10	10	10	52	0.30	0.38	0.39	0.24	-	-	-	-	18.5
10	6	10	10	10	15	47	0.39	0.49	0.51	0.24	-	-	-	-	18.5
10	6	10	10	10	20	47	0.50	0.63	0.65	0.24	-	-	-	-	18.5
10	6	10	10	10	25	47	0.61	0.78	0.80	0.24	-	-	-	-	18.5
10	7	10	10	10	<2	-	0.25	0.40	0.36	0.24	0.24	0.24	0.24	0.24	19.5
10	7	10	10	10	2<3	58	0.30	0.45	0.40	0.24	-	-	-	-	19.5
10	7	10	10	10	3-5	58	0.24	0.36	0.35	0.24	-	-	-	-	19.5
10	7	10	10	10	10	52	0.28	0.40	0.42	0.24	-	-	-	-	19.5
10	7	10	10	10	15	47	0.36	0.52	0.54	0.24	-	-	-	-	19.5
10	7	10	10	10	20	47	0.46	0.67	0.69	0.24	-	-	-	-	19.5
10	7	10	10	10	25	47	0.56	0.82	0.85	0.24	-	-	-	-	19.5
10	8	10	10	10	<2	-	0.24	0.41	0.38	0.24	0.24	0.24	0.24	0.24	20.5
10	8	10	10	10	2<3	64	0.27	0.47	0.43	0.24	-	-	-	-	20.5
10	8	10	10	10	3-5	58	0.24	0.38	0.38	0.24	-	-	-	-	20.5
10	8	10	10	10	10	52	0.26	0.42	0.44	0.24	-	-	-	-	20.5
10	8	10	10	10	15	47	0.34	0.54	0.57	0.24	-	-	-	-	20.5
10	8	10	10	10	20	47	0.43	0.69	0.72	0.24	-	-	-	-	20.5
10	9	10	10	10	<2	-	0.24	0.42	0.41	0.24	0.24	0.24	0.24	0.24	21.5
10	9	10	10	10	2<3	70	0.26	0.50	0.46	0.24	-	-	-	-	21.5
10	9	10	10	10	3-5	64	0.24	0.40	0.40	0.24	-	-	-	-	21.5
10	9	10	10	10	10	58	0.25	0.43	0.46	0.24	-	-	-	-	21.5
10	9	10	10	10	15	52	0.32	0.56	0.59	0.24	-	-	-	-	21.5
10	9	10	10	10	20	47	0.40	0.71	0.75	0.24	-	-	-	-	21.5
10	10	10	10	10	<2	-	0.24	0.44	0.44	0.24	0.24	0.24	0.24	0.24	22.5
10	10	10	10	10	2<3	79	0.25	0.52	0.48	0.24	-	-	-	-	22.5
10	10	10	10	10	3-5	70	0.24	0.42	0.43	0.24	-	-	-	-	22.5
10	10	10	10	10	10	64	0.24	0.44	0.48	0.24	-	-	-	-	22.5
10	10	10	10	10	15	52	0.30	0.57	0.61	0.24	-	-	-	-	22.5
10	10	10	10	10	20	52	0.38	0.73	0.77	0.24	-	-	-	-	22.5

① For Box Length = 8'-0"

② A_{S1} thru A_{S4}, A_{S7} and A_{S8} are minimum required areas of reinforcement per linear foot of box length. A_{S6} and A_{S5} are minimum required areas of reinforcement per linear foot of box width.

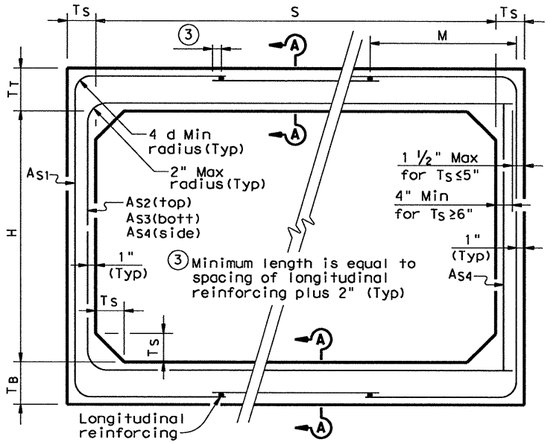

CORNER OPTION "A" CORNER OPTION "B"

FILL HEIGHT 2 FT AND GREATER

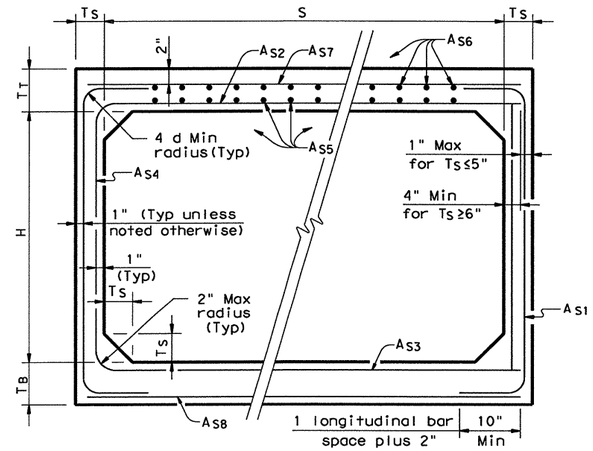

CORNER OPTION "A" CORNER OPTION "B"

FILL HEIGHT LESS THAN 2 FT

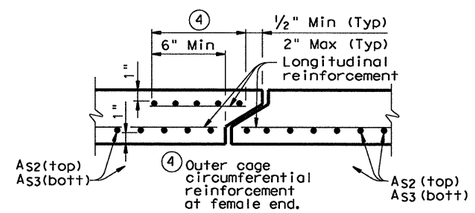

SECTION A-A

(TOP AND BOTTOM SLAB JOINT REINFORCEMENT)

GENERAL NOTES:

Designs shown conform to ASTM C1577. Refer to ASTM C1577 for information or details not shown.

All concrete shall be Class "H" Concrete with a minimum compressive strength of 5,000 psi.

See SCP-MD standard sheet for miscellaneous details and notes not shown.

In lieu of furnishing the designs shown on this sheet, the contractor may furnish an alternate design that is equal to or exceeds the box design for the design fill height in the table. Shop plans for alternate designs shall be submitted in accordance with Item "Precast Concrete Structures".

HL93 LOADING

Texas Department of Transportation
Bridge Division

SINGLE BOX CULVERTS PRECAST
10'-0" SPAN

SCP-10

FILE: scp10ste.dgn	DN: GAF	CK: LMW	DW: BWH/TxDOT	CK: GAF
©TxDOT February 2010	DISTRICT	STATE PROJECT NO.		SHEET
REVISIONS	18	(SEE TITLE SHEET		303

COUNTY	CONTROL	SECT	JOB	HIGHWAY
COLLIN	0091	04	055	SH 289

DISCLAIMER:
The use of this standard is governed by the "Texas Engineering Practice Act". No warranty of any kind is made by TxDOT for any purpose whatsoever. TxDOT assumes no responsibility for the conversion of this standard to other formats or for incorrect results or damages resulting from its use.

LEVELS DEVELOPED ACC:

R-201104-01

DISCLAIMER:
The use of this standard is governed by the "Texas Engineering Practice Act". No warranty of any kind is made by TxDOT for any purpose whatsoever. TxDOT assumes no responsibility for the conversion of this standard to other formats or for incorrect results or damages resulting from its use.

BILLS OF REINFORCING STEEL (For Box Length = 40 feet)

Number of Spans	S	H	T	U	Bars B⑤ No.	Size	Spa	Length	Wt	Bars C & D No.	Size	Spa	Bar C Length	Bar C Wt	Bar D Length	Bar D Wt	Bars E No.	Size	Spa	Length	Wt	Bars F_1 ~#4 No.	Spa	Length	Wt	Bars F_2 ~#4 at 1'-6" Max No.	Length	Wt	Bars M~#4 at 1'-6" Max No.	Length	Wt	Bars Y & Z~#4 at 8" Max No.	Bar Y Length	Bar Y Wt	Bar Z Length	Bar Z Wt	Bars H⑤ 4~#4 Length	Weight	Bars K No.	Weight	Per foot of Barrel Conc (CY)	Reinf (Lb)	Curb Conc (CY)	Curb Reinf (Lb)	Total Conc (CY)	Total Reinf (Lb)
2	10'-0"	5'-0"	8"	7"	162	#6	6"	21'-6"	5,231	194	#4	5"	13'-4"	1,728	10'-1"	1,307	162	#6	6"	11'-0"	2,677	30	8"	39'-9"	797	72	39'-9"	1,912	56	5'-0"	187	61	4'-8"	190	11'-2"	455	21'-6"	57	46	131	1.398	362.1	1.6	188	57.5	14,672
3	10'-0"	5'-0"	8"	7"	162	#6	6"	32'-1"	7,807	194	#4	5"	13'-4"	1,728	10'-1"	1,307	162	#6	6"	21'-7"	5,252	45	8"	39'-9"	1,195	103	39'-9"	2,735	56	5'-0"	187	122	4'-8"	380	11'-2"	910	32'-1"	86	66	187	2.029	537.5	2.4	273	83.6	21,774
4	10'-0"	5'-0"	8"	7"	162	#6	6"	42'-8"	10,382	194	#4	5"	13'-4"	1,728	10'-1"	1,307	162	#6	6"	32'-2"	7,827	60	8"	39'-9"	1,593	134	39'-9"	3,558	56	5'-0"	187	183	4'-8"	570	11'-2"	1,365	42'-8"	114	88	250	2.659	712.9	3.2	364	109.6	28,881
5	10'-0"	5'-0"	8"	7"	162	#6	6"	53'-3"	12,957	194	#4	5"	13'-4"	1,728	10'-1"	1,307	162	#6	6"	42'-9"	10,402	75	8"	39'-9"	1,991	165	39'-9"	4,381	56	5'-0"	187	244	4'-8"	761	11'-2"	1,820	53'-3"	142	110	312	3.290	888.4	4.0	454	135.6	35,988
6	10'-0"	5'-0"	8"	7"	162	#6	6"	66'-5"	16,161	194	#4	5"	13'-4"	1,728	10'-1"	1,307	162	#6	6"	53'-4"	12,977	90	8"	39'-9"	2,390	196	39'-9"	5,204	56	5'-0"	187	305	4'-8"	951	11'-2"	2,275	65'-7"	175	130	369	3.921	1,079.5	4.7	544	161.5	43,724
2	10'-0"	6'-0"	8"	7"	162	#6	6"	21'-6"	5,231	194	#4	5"	14'-4"	1,857	10'-1"	1,307	162	#6	6"	11'-0"	2,677	30	8"	39'-9"	797	78	39'-9"	2,071	56	6'-0"	224	61	4'-8"	190	13'-2"	537	21'-6"	57	46	131	1.463	372.3	1.6	188	60.1	15,079
3	10'-0"	6'-0"	8"	7"	162	#6	6"	32'-1"	7,807	194	#4	5"	14'-4"	1,857	10'-1"	1,307	162	#6	6"	21'-7"	5,252	45	8"	39'-9"	1,195	111	39'-9"	2,947	56	6'-0"	224	122	4'-8"	380	13'-2"	1,073	32'-1"	86	66	187	2.115	551.1	2.4	273	87.0	22,315
4	10'-0"	6'-0"	8"	7"	162	#6	6"	42'-8"	10,382	194	#4	5"	14'-4"	1,857	10'-1"	1,307	162	#6	6"	32'-2"	7,827	60	8"	39'-9"	1,593	144	39'-9"	3,824	56	6'-0"	224	183	4'-8"	570	13'-2"	1,610	42'-8"	114	88	250	2.767	729.9	3.2	364	113.9	29,558
5	10'-0"	6'-0"	8"	7"	162	#6	6"	53'-3"	12,957	194	#4	5"	14'-4"	1,857	10'-1"	1,307	162	#6	6"	42'-9"	10,402	75	8"	39'-9"	1,991	177	39'-9"	4,700	56	6'-0"	224	244	4'-8"	761	13'-2"	2,146	53'-3"	142	110	312	3.420	908.6	4.0	454	140.8	36,799
6	10'-0"	6'-0"	8"	7"	162	#6	6"	66'-5"	16,161	194	#4	5"	14'-4"	1,857	10'-1"	1,307	162	#6	6"	53'-4"	12,977	90	8"	39'-9"	2,390	210	39'-9"	5,576	56	6'-0"	224	305	4'-8"	951	13'-2"	2,683	65'-7"	175	130	369	4.072	1,103.2	4.7	544	167.6	44,670
2	10'-0"	7'-0"	8"	7"	162	#6	6"	21'-6"	5,231	194	#4	5"	15'-4"	1,987	10'-1"	1,307	162	#6	6"	11'-0"	2,677	30	8"	39'-9"	797	78	39'-9"	2,071	56	7'-0"	262	61	4'-8"	190	15'-2"	618	21'-6"	57	46	131	1.528	378.5	1.6	188	62.7	15,328
3	10'-0"	7'-0"	8"	7"	162	#6	6"	32'-1"	7,807	194	#4	5"	15'-4"	1,987	10'-1"	1,307	162	#6	6"	21'-7"	5,252	45	8"	39'-9"	1,195	111	39'-9"	2,947	56	7'-0"	262	122	4'-8"	380	15'-2"	1,236	32'-1"	86	66	187	2.202	559.3	2.4	273	90.5	22,646
4	10'-0"	7'-0"	8"	7"	162	#6	6"	42'-8"	10,382	194	#4	5"	15'-4"	1,987	10'-1"	1,307	162	#6	6"	32'-2"	7,827	60	8"	39'-9"	1,593	144	39'-9"	3,824	56	7'-0"	262	183	4'-8"	570	15'-2"	1,854	42'-8"	114	88	250	2.876	740.2	3.2	364	118.2	29,970
5	10'-0"	7'-0"	8"	7"	162	#6	6"	53'-3"	12,957	194	#4	5"	15'-4"	1,987	10'-1"	1,307	162	#6	6"	42'-9"	10,402	75	8"	39'-9"	1,991	177	39'-9"	4,700	56	7'-0"	262	244	4'-8"	761	15'-2"	2,472	53'-3"	142	110	312	3.549	921.0	4.0	454	146.0	37,293
6	10'-0"	7'-0"	8"	7"	162	#6	6"	66'-5"	16,161	194	#4	5"	15'-4"	1,987	10'-1"	1,307	162	#6	6"	53'-4"	12,977	90	8"	39'-9"	2,390	210	39'-9"	5,576	56	7'-0"	262	305	4'-8"	951	15'-2"	3,090	65'-7"	175	130	369	4.223	1,117.5	4.7	544	173.6	45,245
2	10'-0"	8'-0"	8"	7"	162	#6	6"	21'-6"	5,231	194	#4	5"	16'-4"	2,117	10'-1"	1,307	162	#6	6"	11'-0"	2,677	30	8"	39'-9"	797	84	39'-9"	2,230	56	8'-0"	299	61	4'-8"	190	17'-2"	700	21'-6"	57	46	131	1.593	388.7	1.6	188	65.3	15,736
3	10'-0"	8'-0"	8"	7"	162	#6	6"	32'-1"	7,807	194	#4	5"	16'-4"	2,117	10'-1"	1,307	162	#6	6"	21'-7"	5,252	45	8"	39'-9"	1,195	119	39'-9"	3,160	56	8'-0"	299	122	4'-8"	380	17'-2"	1,399	32'-1"	86	66	187	2.288	572.9	2.4	273	93.9	23,189
4	10'-0"	8'-0"	8"	7"	162	#6	6"	42'-8"	10,382	194	#4	5"	16'-4"	2,117	10'-1"	1,307	162	#6	6"	32'-2"	7,827	60	8"	39'-9"	1,593	154	39'-9"	4,089	56	8'-0"	299	183	4'-8"	570	17'-2"	2,099	42'-8"	114	88	250	2.984	757.1	3.2	364	122.6	30,647
5	10'-0"	8'-0"	8"	7"	162	#6	6"	53'-3"	12,957	194	#4	5"	16'-4"	2,117	10'-1"	1,307	162	#6	6"	42'-9"	10,402	75	8"	39'-9"	1,991	189	39'-9"	5,019	56	8'-0"	299	244	4'-8"	761	17'-2"	2,798	53'-3"	142	110	312	3.679	941.3	4.0	454	151.2	38,105
6	10'-0"	8'-0"	8"	7"	162	#6	6"	66'-5"	16,161	194	#4	5"	16'-4"	2,117	10'-1"	1,307	162	#6	6"	53'-4"	12,977	90	8"	39'-9"	2,390	224	39'-9"	5,948	56	8'-0"	299	305	4'-8"	951	17'-2"	3,498	65'-7"	175	130	369	4.374	1,141.2	4.7	544	179.7	46,192
2	10'-0"	9'-0"	8"	7"	162	#6	6"	21'-6"	5,231	194	#4	5"	17'-4"	2,246	10'-1"	1,307	162	#6	6"	11'-0"	2,677	30	8"	39'-9"	797	90	39'-9"	2,390	56	9'-0"	337	61	4'-8"	190	19'-2"	781	21'-6"	57	46	131	1.657	398.9	1.6	188	67.9	16,144
3	10'-0"	9'-0"	8"	7"	162	#6	6"	32'-1"	7,807	194	#4	5"	17'-4"	2,246	10'-1"	1,307	162	#6	6"	21'-7"	5,252	45	8"	39'-9"	1,195	127	39'-9"	3,372	56	9'-0"	337	122	4'-8"	380	19'-2"	1,562	32'-1"	86	66	187	2.374	586.5	2.4	273	97.4	23,731
4	10'-0"	9'-0"	8"	7"	162	#6	6"	42'-8"	10,382	194	#4	5"	17'-4"	2,246	10'-1"	1,307	162	#6	6"	32'-2"	7,827	60	8"	39'-9"	1,593	164	39'-9"	4,355	56	9'-0"	337	183	4'-8"	570	19'-2"	2,343	42'-8"	114	88	250	3.092	774.0	3.2	364	126.9	31,324
5	10'-0"	9'-0"	8"	7"	162	#6	6"	53'-3"	12,957	194	#4	5"	17'-4"	2,246	10'-1"	1,307	162	#6	6"	42'-9"	10,402	75	8"	39'-9"	1,991	201	39'-9"	5,337	56	9'-0"	337	244	4'-8"	761	19'-2"	3,124	53'-3"	142	110	312	3.809	961.6	4.0	454	156.4	38,916
6	10'-0"	9'-0"	8"	7"	162	#6	6"	66'-5"	16,161	162	#5	6"	17'-4"	2,929	10'-6"	1,774	162	#6	6"	53'-4"	12,977	90	8"	39'-9"	2,390	238	39'-9"	6,320	56	9'-0"	337	305	4'-8"	951	19'-2"	3,905	65'-7"	175	130	369	4.526	1,193.6	4.7	544	185.7	48,288
2	10'-0"	10'-0"	8"	7"	162	#6	6"	21'-6"	5,231	162	#5	6"	18'-4"	3,098	10'-6"	1,774	162	#6	6"	11'-0"	2,677	30	8"	39'-9"	797	90	39'-9"	2,390	56	10'-0"	374	61	4'-8"	190	21'-2"	862	21'-6"	57	46	131	1.722	434.8	1.6	188	70.5	17,581
3	10'-0"	10'-0"	8"	7"	162	#6	6"	32'-1"	7,807	162	#5	6"	18'-4"	3,098	10'-6"	1,774	162	#6	6"	21'-7"	5,252	45	8"	39'-9"	1,195	127	39'-9"	3,372	56	10'-0"	374	122	4'-8"	380	21'-2"	1,725	32'-1"	86	66	187	2.461	624.4	2.4	273	100.8	25,250
4	10'-0"	10'-0"	8"	7"	162	#6	6"	42'-8"	10,382	162	#5	6"	18'-4"	3,098	10'-6"	1,774	162	#6	6"	32'-2"	7,827	60	8"	39'-9"	1,593	164	39'-9"	4,355	56	10'-0"	374	183	4'-8"	570	21'-2"	2,587	42'-8"	114	88	250	3.200	814.0	3.2	364	131.2	32,924
5	10'-0"	10'-0"	8"	7"	162	#6	6"	53'-3"	12,957	162	#5	6"	18'-4"	3,098	10'-6"	1,774	162	#6	6"	42'-9"	10,402	75	8"	39'-9"	1,991	201	39'-9"	5,337	56	10'-0"	374	244	4'-8"	761	21'-2"	3,450	53'-3"	142	110	312	3.938	1,003.6	4.0	454	161.5	40,598
6	10'-0"	10'-0"	8"	7"	162	#6	6"	66'-5"	16,161	162	#5	6"	18'-4"	3,098	10'-6"	1,774	162	#6	6"	53'-4"	12,977	90	8"	39'-9"	2,390	238	39'-9"	6,320	56	10'-0"	374	305	4'-8"	951	21'-2"	4,312	65'-7"	175	130	369	4.677	1,208.9	4.7	544	191.8	48,901

H	Bar Dimensions "X"	Bar Dimensions "Y"
5'-0"	5'-6"	2'-3"
6'-0"	6'-6"	2'-3"
7'-0"	7'-6"	2'-3"
8'-0"	8'-6"	2'-3"
9'-0"	9'-6"	2'-3"
10'-0"	10'-6"	2'-8"

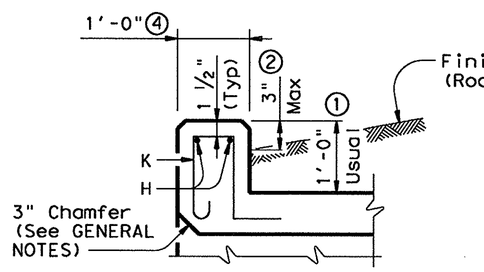

SECTION THRU CURB

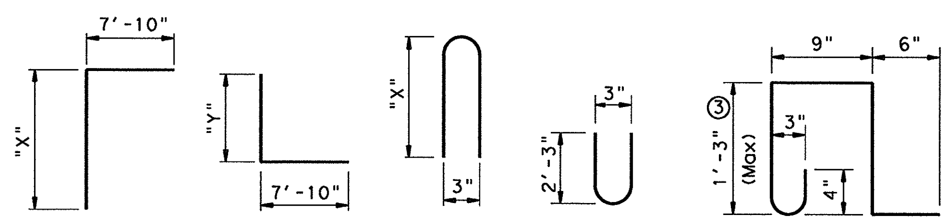

BARS C BARS D BARS Z BARS Y BARS K ~ #4
(Spa = 1'-0" Max)
(Length = 4'-3")

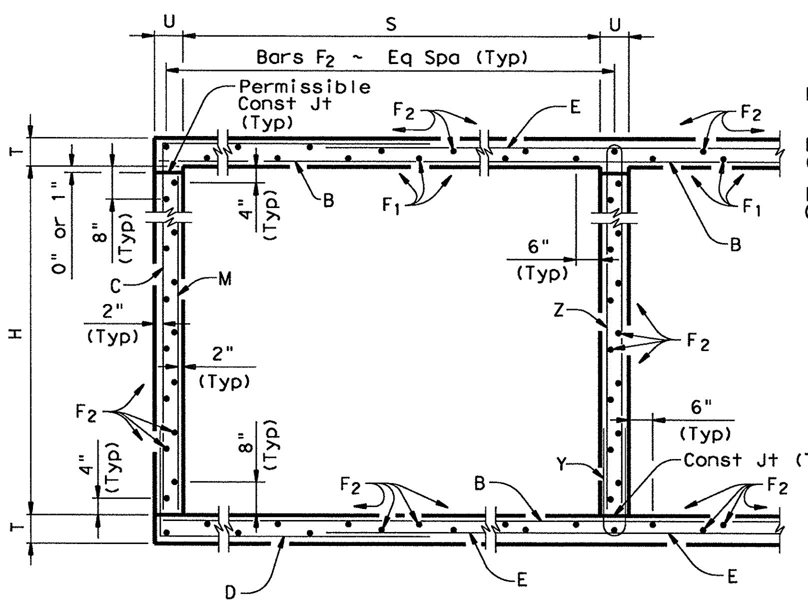

TYPICAL SECTION

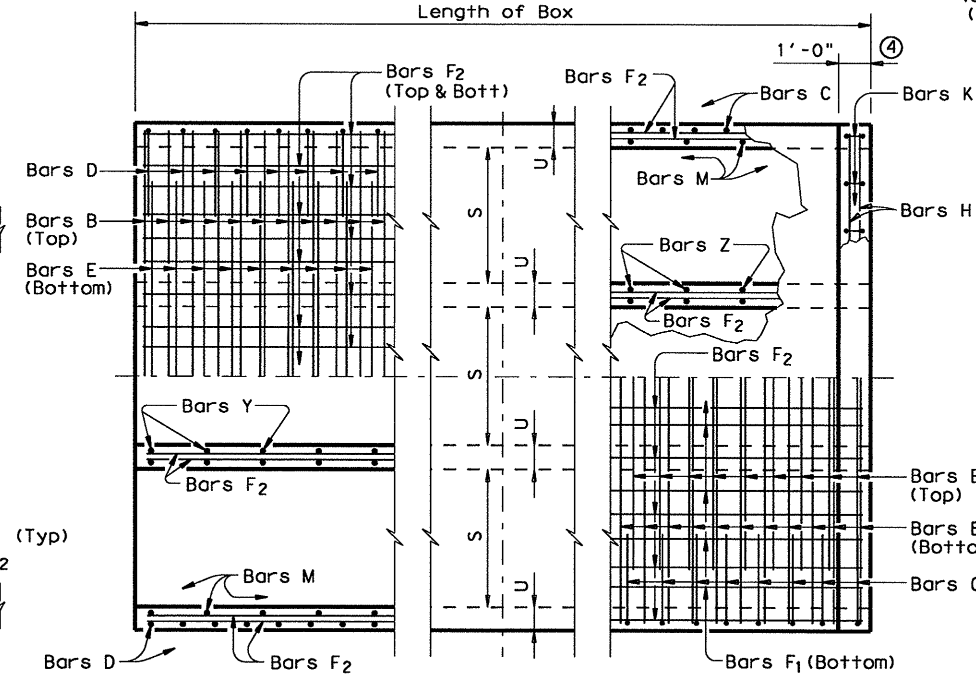

BOTTOM SLAB PART PLANS TOP SLAB

GENERAL NOTES:
Designed according to AASHTO LRFD Specifications.
Designed to the maximum fill height shown.
All reinforcing steel shall be Grade 60.
All concrete shall be Class "C" with these exceptions: use Class "S" for top slabs of culverts with overlay, with 1-to-2 course surface treatment, or with the top slab as the final riding surface.
Class "C" concrete shall have a minimum compressive strength of 3,600 psi. Class "S" concrete shall have a minimum compressive strength of 4,000 psi.
The use of permanent forms is not allowed.
The bottom edge of the top slab shall be chamfered 3" at the entrance.
Reinforcing bars shall be adjusted to provide a minimum of 1 ¼" clear cover.
Construction joints shown at the flow line may be raised a maximum of 6" at the Contractor's option. If this option is used, Bars M may be cut off or raised, Bars C and D may be reversed, and Bars Y and Z may be reversed.
See standard MC-MD for skewed ends, angle sections and lengthening details.

① 0" min to 5'-0" max. Estimated curb heights are shown elsewhere in the plans. For structures with pedestrian rail, bicycle rail or curbs taller than 1'-0", refer to ECD standard. For structures with T6 bridge rail, refer to T6-CM standard. For structures with traffic rail, other than T6, refer to RAC standard.

② For vehicle safety, the following requirements must be met:
- For structures without bridge rail, curbs shall project no more than 3" above finished grade.
- For structures with bridge rail, curbs shall be flush with finished grade.
Curb heights shall be reduced, if necessary, to meet the above requirements. No changes will be made in quantities and no additional compensation will be allowed for this work.

③ For curbs less than 1'-0" high, tilt bars K or reduce bar height as necessary to maintain cover. For curbs less than 3" high, bars K may be omitted.

④ 1'-0" typical. 2'-0" when RAC standard is referred to elsewhere in the plans.

⑤ Bar lengths over 60' include one bar lap as follows:
#4 = 1'-9", #5 = 2'-2", & #6 = 2'-7"
For Epoxy coated reinforcing, bar laps shall be as follows:
#4 = 2'-7", #5 = 3'-3", & #6 = 3'-10"

HL93 LOADING

Texas Department of Transportation
Bridge Division

MULTIPLE BOX CULVERTS CAST-IN-PLACE
10'-0" SPAN
0' TO 7' FILL

MC-10-7

FILE: mc107ste.dgn	DN: GAF	CK: LMW	DW: BWH/TxDOT	CK: GAF
©TxDOT February 2010	DISTRICT	STATE PROJECT NO.		SHEET
REVISIONS	18	(SEE TITLE SHEET)		364
	COUNTY	CONTROL	SECT / JOB	HIGHWAY
	COLLIN	0091	04 / 055	SH 289

LEVELS DISPLAYED
ACC:
1

R-201104-01

BOX DATA

SECTION DIMENSIONS S (ft)	H (ft)	T_T (in)	T_B (in)	T_S (in)	Fill Height (ft)	M (Min) (in)	REINFORCING (in^2/ft) ② A_{S1}	A_{S2}	A_{S3}	A_{S4}	A_{S5}	A_{S6}	A_{S7}	A_{S8}	① Lift Weight (Tons)
12	4	12	12	12	<2	-	0.38	0.31	0.29	0.29	0.29	0.29	0.29	0.29	22.8
12	4	12	12	12	2<3	73	0.44	0.37	0.30	0.29	-	-	-	-	22.8
12	4	12	12	12	3-5	66	0.37	0.30	0.29	0.29	-	-	-	-	22.8
12	4	12	12	12	10	66	0.44	0.34	0.35	0.29	-	-	-	-	22.8
12	4	12	12	12	15	59	0.60	0.46	0.48	0.29	-	-	-	-	22.8
12	4	12	12	12	20	59	0.78	0.60	0.61	0.29	-	-	-	-	22.8
12	4	12	12	12	25	59	0.97	0.74	0.75	0.29	-	-	-	-	22.8
12	6	12	12	12	<2	-	0.32	0.36	0.32	0.29	0.29	0.29	0.29	0.29	25.2
12	6	12	12	12	2<3	66	0.38	0.43	0.36	0.29	-	-	-	-	25.2
12	6	12	12	12	3-5	59	0.32	0.36	0.33	0.29	-	-	-	-	25.2
12	6	12	12	12	10	59	0.38	0.41	0.42	0.29	-	-	-	-	25.2
12	6	12	12	12	15	53	0.51	0.55	0.57	0.29	-	-	-	-	25.2
12	6	12	12	12	20	53	0.65	0.71	0.72	0.29	-	-	-	-	25.2
12	6	12	12	12	25	53	0.81	0.87	0.89	0.29	-	-	-	-	25.2
12	8	12	12	12	<2	-	0.29	0.41	0.38	0.29	0.29	0.29	0.29	0.29	27.6
12	8	12	12	12	2<3	66	0.33	0.49	0.42	0.29	-	-	-	-	27.6
12	8	12	12	12	3-5	59	0.29	0.41	0.38	0.29	-	-	-	-	27.6
12	8	12	12	12	10	59	0.34	0.46	0.48	0.29	-	-	-	-	27.6
12	8	12	12	12	15	53	0.44	0.61	0.64	0.29	-	-	-	-	27.6
12	8	12	12	12	20	53	0.57	0.78	0.81	0.29	-	-	-	-	27.6
12	8	12	12	12	25	53	0.69	0.96	0.99	0.29	-	-	-	-	27.6
12	10	12	12	12	<2	-	0.29	0.45	0.43	0.29	0.29	0.29	0.29	0.29	30.0
12	10	12	12	12	2<3	73	0.29	0.54	0.48	0.29	-	-	-	-	30.0
12	10	12	12	12	3-5	66	0.29	0.45	0.43	0.29	-	-	-	-	30.0
12	10	12	12	12	10	59	0.31	0.49	0.53	0.29	-	-	-	-	30.0
12	10	12	12	12	15	53	0.40	0.65	0.70	0.29	-	-	-	-	30.0
12	10	12	12	12	20	53	0.51	0.84	0.88	0.29	-	-	-	-	30.0
12	10	12	12	12	25	53	0.62	1.03	1.07	0.29	-	-	-	-	30.0
12	12	12	12	12	<2	-	0.29	0.49	0.48	0.33	0.29	0.29	0.29	0.29	32.4
12	12	12	12	12	2<3	93	0.29	0.59	0.53	0.29	-	-	-	-	32.4
12	12	12	12	12	3-5	80	0.29	0.49	0.48	0.29	-	-	-	-	32.4
12	12	12	12	12	10	73	0.29	0.52	0.58	0.29	-	-	-	-	32.4
12	12	12	12	12	15	59	0.37	0.69	0.74	0.29	-	-	-	-	32.4
12	12	12	12	12	20	59	0.46	0.87	0.93	0.29	-	-	-	-	32.4

① For Box Length = 8'-0"

② A_{S1} thru A_{S4}, A_{S7} and A_{S8} are minimum required areas of reinforcement per linear foot of box length. A_{S6} and A_{S5} are minimum required areas of reinforcement per linear foot of box width.

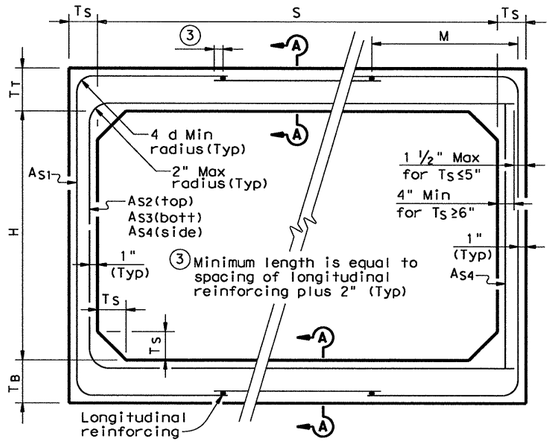

CORNER OPTION "A" CORNER OPTION "B"

FILL HEIGHT 2 FT AND GREATER

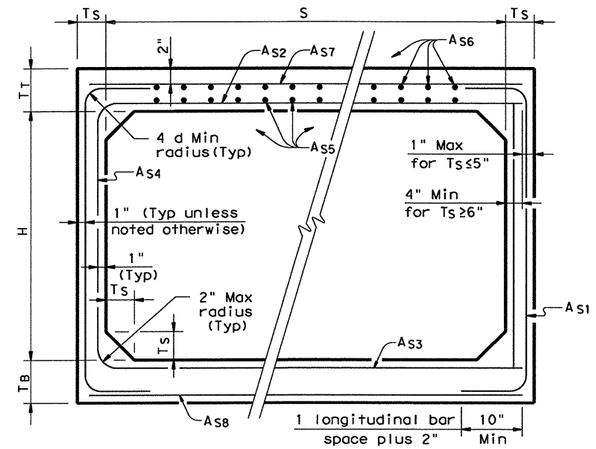

CORNER OPTION "A" CORNER OPTION "B"

FILL HEIGHT LESS THAN 2 FT

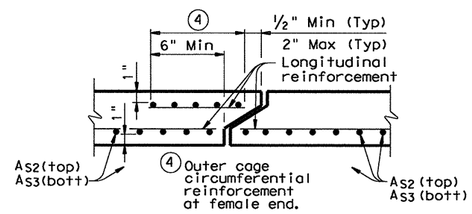

SECTION A-A

(TOP AND BOTTOM SLAB JOINT REINFORCEMENT)

GENERAL NOTES:

Designs shown conform to ASTM C1577.

Refer to ASTM C1577 for information or details not shown.

All concrete shall be Class "H" Concrete with a minimum compressive strength of 5,000 psi.

See SCP-MD standard sheet for miscellaneous details and notes not shown.

In lieu of furnishing the designs shown on this sheet, the contractor may furnish an alternate design that is equal to or exceeds the box design for the design fill height in the table. Shop plans for alternate designs shall be submitted in accordance with Item "Precast Concrete Structures".

HL93 LOADING

Texas Department of Transportation
Bridge Division

SINGLE BOX CULVERTS PRECAST

12'-0" SPAN

SCP-12

FILE: scp12ste.dgn	DN: GAF	CK: LMW	DW: BWH/TxDOT	CK: GAF
©TxDOT February 2010	DISTRICT	STATE PROJECT NO.		SHEET
REVISIONS	18	(SEE TITLE SHEET		305

COUNTY	CONTROL	SECT	JOB	HIGHWAY
COLLIN	0091	04	055	SH 289

DISCLAIMER:
The use of this standard is governed by the "Texas Engineering Practice Act". No warranty is made by TxDOT for any purpose whatsoever. TxDOT assumes no responsibility for the conversion of this standard to other formats or for incorrect results or damages resulting from its use.

LEVELS DIS. 0 1 ACC:

R-201104-01

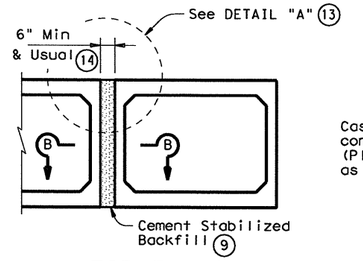

MULTIPLE UNIT PLACEMENT

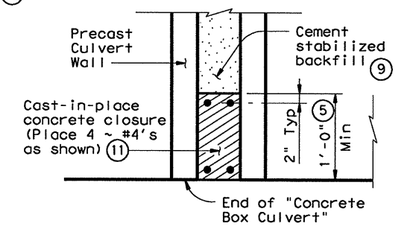

SECTION B-B

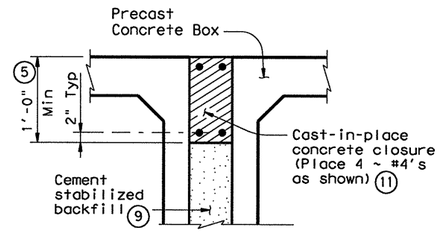

DETAIL "A" (13)

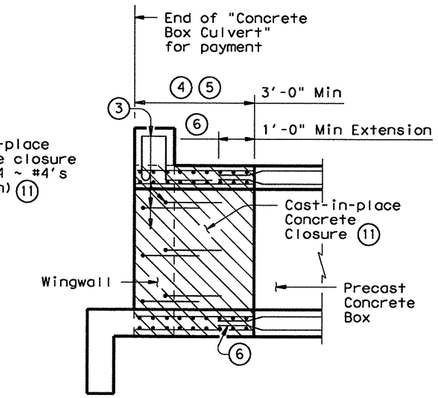

WINGWALL CONNECTION

(Also applies to Safety End Treatment)

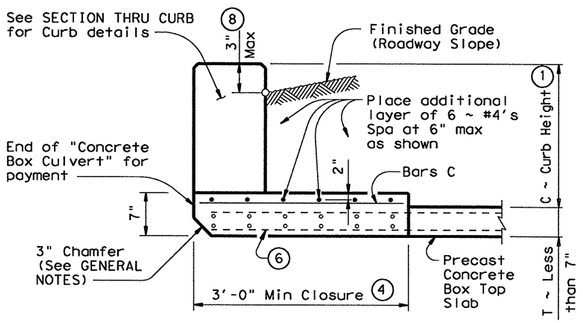

SECTION THRU TOP SLABS LESS THAN 7"

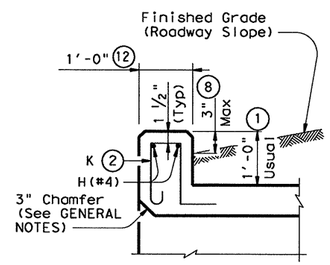

SECTION THRU CURB

(10) QUANTITIES PER FOOT OF CURB	
Reinforcing Steel	4.18 Lb
Concrete	0.037 CY

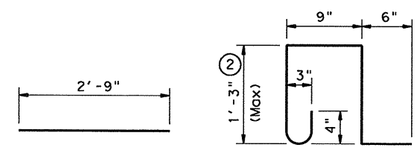

BARS C ~ #4
(Spa = 1'-0" Max)

BARS K ~ #4
(Spa = 1'-0" Max)
(Length = 4'-3")

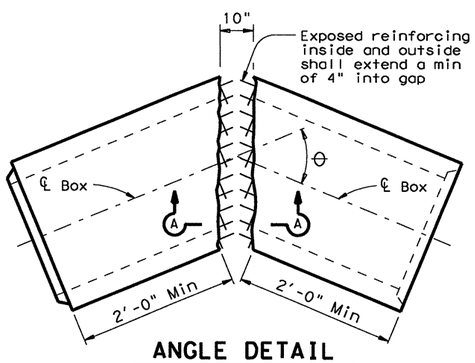

ANGLE DETAIL

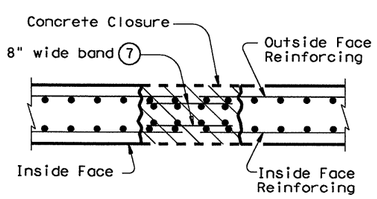

SECTION A-A

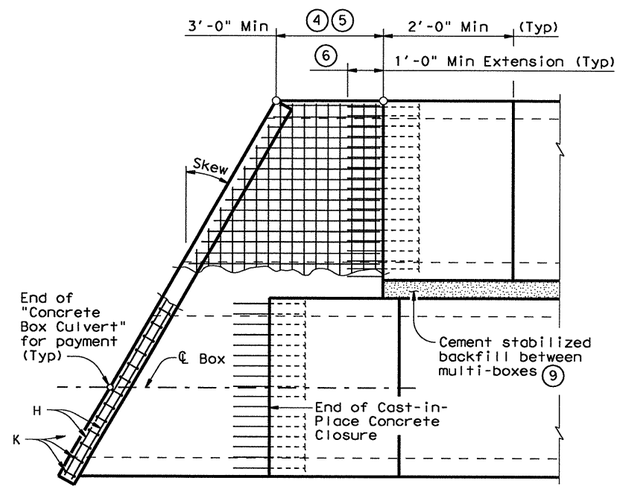

PLAN OF SKEWED ENDS

(Showing multi-box placement)

(1) 0" min to 5'-0" max. Estimated curb heights are shown elsewhere in the plans. For structures with pedestrian rail, bicycle rail or curbs taller than 1'-0", refer to ECD standard. For structures with T6 traffic rail, refer to T6-CM standard. For structures with traffic rail, other than T6, refer to RAC standard.

(2) For curbs less than 1'-0" high, tilt Bars K or reduce bar height as necessary to maintain cover. For curbs less than 3" high, Bars K may be omitted.

(3) Curb, Wingwall or Safety End Treatment reinforcing shall extend into concrete closure. Any reinforcing that does not fit into the closure shall be bent or trimmed as necessary.

(4) Cast-in-place concrete closure shall be 3'-0" min. Boxes shall be cast short or broken back in the field. All reinforcing in the closure shall be the same size and spacing as in the precast box section. Except where shown otherwise, the cast-in-place closure shall be flush with the inside and outside faces of the precast box section.

(5) For multiple unit placements the length of the closure for the interior walls may be adjusted as necessary. The length of the top slab, bottom slab, and exterior wall closure shall not be less than 3'-0". See Section B-B detail when interior walls are cast full length.

(6) Precast box reinforcing shall extend a minimum of 1'-0" into concrete closure (Typ).

(7) Bands of reinforcing matching the inside and outside face reinforcing shall be placed in the gaps of the top and bottom slabs. A band matching the outside face reinforcing of the wall shall be placed in the gaps of the walls (placed in the outside face only). The bands shall be tack welded to the exposed reinforcing at each point of contact.

(8) For vehicle safety, the following requirements must be met:
- For structures without bridge rail, curbs shall project no more than 3" above finished grade.
- For structures with bridge rail, curbs shall be flush with finished grade.

Curb heights shall be reduced, if necessary, to meet the above requirements. No changes will be made in quantities and no additional compensation will be allowed for this work.

(9) Cement Stabilized Backfill between boxes is considered part of the Box Culvert for payment.

(10) All curb concrete and reinforcing is considered part of the Box Culvert for payment.

(11) Any additional concrete and reinforcing required for the closures shall be considered as subsidiary to the Concrete Box Culvert.

(12) 1'-0" typical. 2'-0" when RAC standard is referred to elsewhere in the plans.

(13) For multiple unit placement with overlay, with 1 to 2 course surface treatment, or with the top slab as the final riding surface, provide wall closure as shown in DETAIL "A".

(14) This dimension may be increased with approval of the Engineer to allow the precast boxes to be tunneled or jacked in accordance with Item 476, "Jacking, Boring, or Tunneling Pipe or Box". No payment will be made for any additional material in the gap between adjacent boxes.

GENERAL NOTES:

Designed according to AASHTO LRFD Specifications.

All closure concrete shall be Class "C" with a minimum compressive strength of 3600 psi and shall be placed according to the Item, "Concrete Structures".

Any additional concrete required for the closures shall be considered as subsidiary to the Concrete Box Culvert.

Refer to the Single Box Culverts Precast standard for details not shown.

The bottom edge of the top slab closure shall be chamfered 3 inches at the entrance.

HL93 LOADING

Texas Department of Transportation
Bridge Division

BOX CULVERTS PRECAST MISCELLANEOUS DETAILS

SCP-MD

FILE: scpmdste.dgn	DN: GAF	CK: LMW	DW: BWH/TxDOT	CK: GAF
©TxDOT February 2010	DISTRICT	STATE PROJECT NO.		SHEET
REVISIONS	DAL	(SEE TITLE SHEET)		366

COUNTY	CONTROL	SECT	JOB	HIGHWAY
COLLIN	0091	04	055	SH 289

DISCLAIMER:
The use of this standard is governed by the "Texas Engineering Practice Act". No warranty of any kind is made by TxDOT for any purpose whatsoever. TxDOT assumes no responsibility for the conversion of this standard to other formats or for incorrect results or damages resulting from its use.

LEVELS | FED | ACC:

R-201104-01

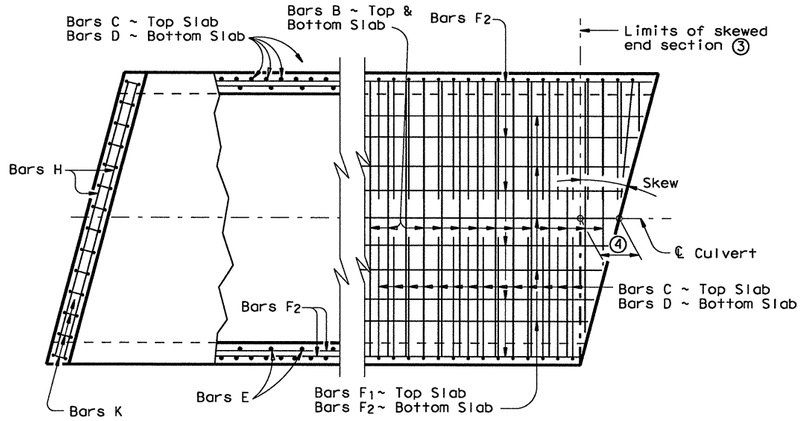

PLAN OF SKEWED ENDS ~ FROM 0° TO 15° ⑦

② When the spacing between Bars B becomes less than half of the normal spacing, bars shall be cut to avoid fouling

③ The length of Bars B and E will vary in the skewed end sections

④ [One half of overall width] x [Tan of the skew angle]

⑤ Bars F_1 and F_2 shall be continuous through the angle section. They shall be bent to remain parallel to the walls of the Box Culvert.

⑥ When necessary to avoid fouling in acute corners, the slab extension leg of Bars C and Bars D may be shortened to a minimum of 1'-6" for skews of 30° and 45°.

⑦ For skews of 15° or less, the contractor has the option of placing Bars B, C and D parallel to the skewed end while maintaining spacing along centerline box. Lengths of Bars B shown on the standards shall be increased to accommodate the skew.

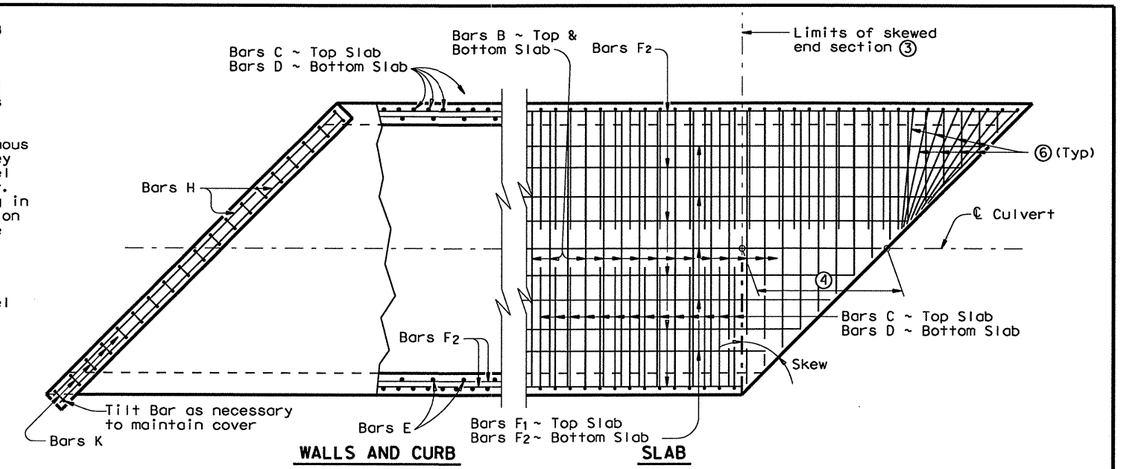

PLAN OF SKEWED ENDS ~ OVER 30° TO 45°

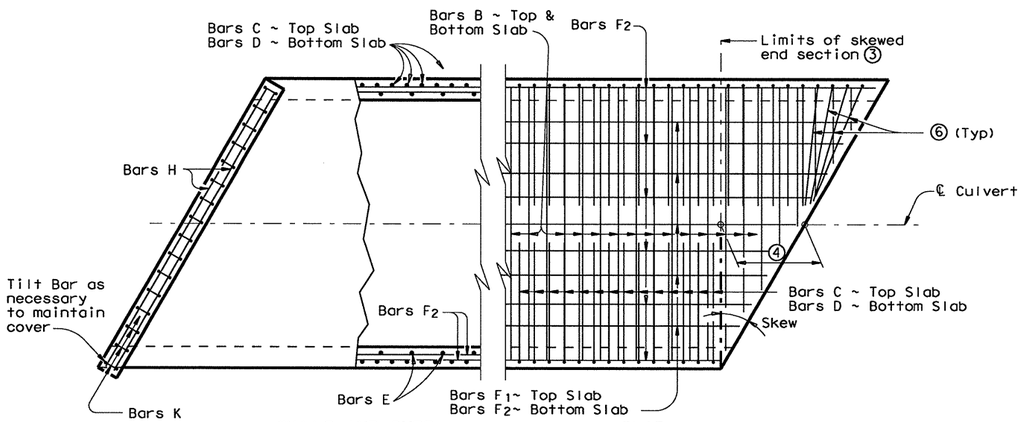

PLAN OF SKEWED ENDS ~ OVER 15° TO 30°

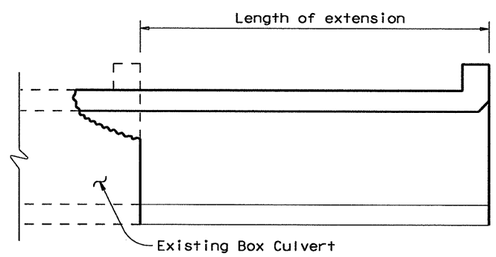

LENGTHENING DETAIL ①

① For box culverts with less than 2'-0" of fill, the top slab shall be broken back to provide a minimum 1'-10" lap of the existing longitudinal bars with the longitudinal bars in the extension. If the depth of fill is 2'-0" or greater, the top slab shall be broken back to provide a 1'-0" minimum embedment of existing longitudinal reinforcing into the extension. Alternatively, if the fill height is greater than 2'-0", the existing curb may be left in place and 2'-0" long #6 bars shall be drilled and grouted 1'-0" into the existing top slab at 1'-6" center to center spacing. Wings and apron shall be broken back as necessary to install the extension. Exposed wingwall and apron reinforcing may be removed or cleaned and included in the extension. When lengthening existing box culverts with dimensions different than current standard dimensions, horizontal and vertical transitions shall be formed as directed by the Engineer. Bottom slabs shall match to maintain an uninterrupted flow line. Existing and new reinforcing shall be field bent into transition maintaining specified cover requirements.

GENERAL NOTES:

Designed according to AASHTO LRFD Specifications.

All reinforcing steel shall be Grade 60.

All concrete shall be Class "C" with these exceptions: use Class "S" for top slabs of culverts with overlay, with 1-to-2 course surface treatment, or with the top slab as the final riding surface.

Class "C" concrete shall have a minimum compressive strength of 3,600 psi. Class "S" concrete shall have a minimum compressive strength of 4,000 psi.

The use of permanent forms is not allowed.

Refer to Single Box Culverts Cast-in-Place standard for details of straight sections of culvert. For skewed sections and angle sections refer to Single Box Culverts Cast-in-Place standard for slab and wall dimensions, bar sizes, maximum bar spacing, and any other details not shown. For Skewed ends with curbs, adjust length of Bars H, number of Bars K, curb concrete volume and reinforcing steel weight by dividing the values shown on the culvert standards by the cosine of the skew angle.

Laps for Bars H, when required, shall be 1'-9" for uncoated bars and 2'-7" for epoxy coated.

HL93 LOADING

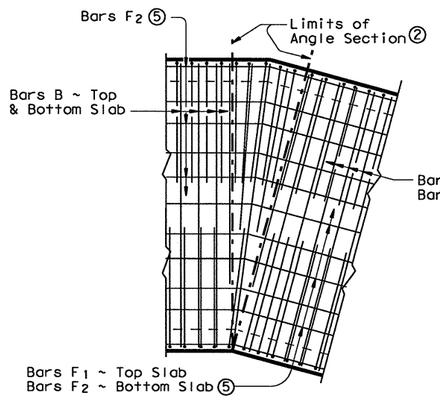

PLAN OF ANGLE SECTION ~ FROM 0° TO 15°

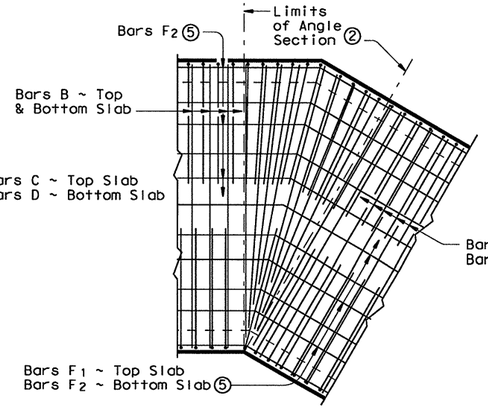

PLAN OF ANGLE SECTION ~ OVER 15° TO 30°

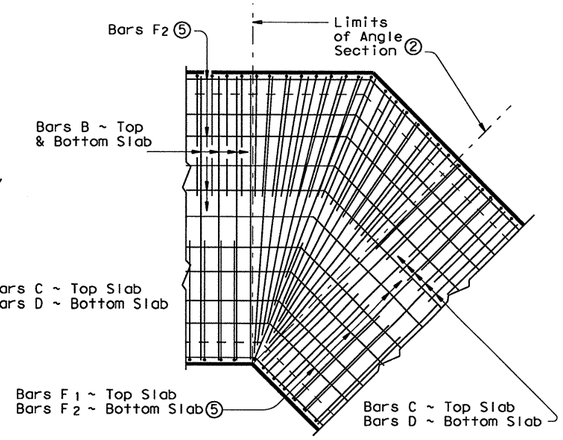

PLAN OF ANGLE SECTION ~ OVER 30° TO 45°

Texas Department of Transportation
Bridge Division

SINGLE BOX CULVERTS CAST-IN-PLACE MISCELLANEOUS DETAILS

SCC-MD

FILE: scomdste.dgn	DN: GAF	CK: LMW	DW: BWH/TxDOT	CK: GAF	
©TxDOT February 2010	DISTRICT	STATE PROJECT NO.			SHEET
REVISIONS	18	(SEE TIITLE SHEET			307
	COUNTY		CONTROL	SECT	JOB	HIGHWAY
	COLLIN		0091	04	055	SH 289

DISCLAIMER:
The use of this standard is governed by the "Texas Engineering Practice Act". No warranty of any kind is made by TxDOT for any purpose whatsoever. TxDOT assumes no responsibility for the conversion of this standard to other formats or for incorrect results or damages resulting from its use.

LEVELS U... ATED | ACC:

R-201104-01

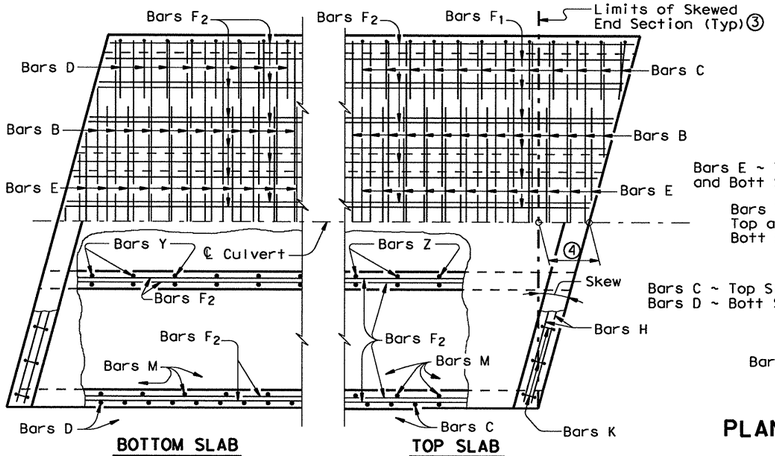

PLAN OF SKEWED ENDS ~ FROM 0° TO 15°⑦

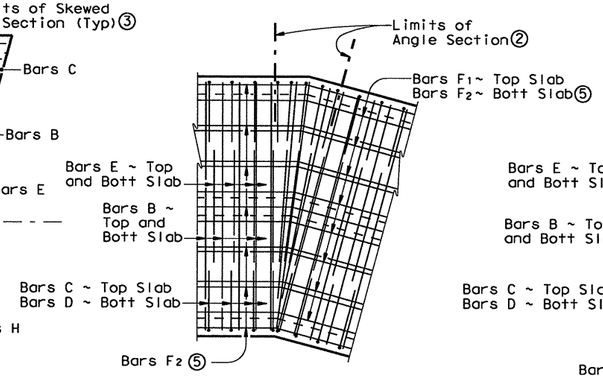

PLAN OF ANGLE SECTION ~ FROM 0° TO 15°

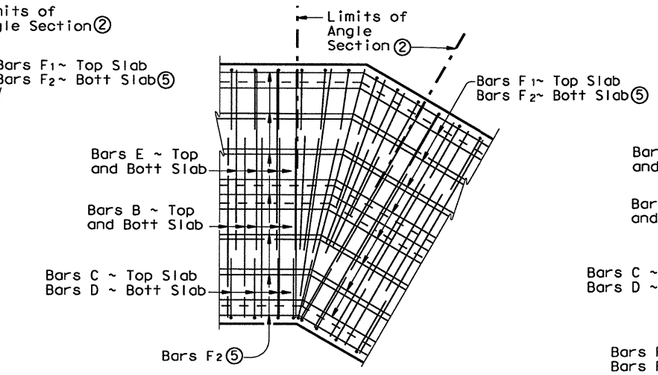

PLAN OF ANGLE SECTION ~ OVER 15° TO 30°

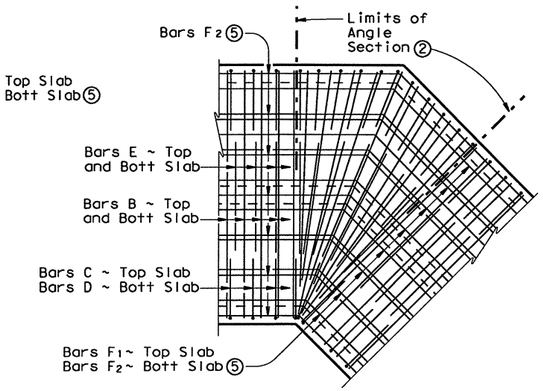

PLAN OF ANGLE SECTION ~ OVER 30° TO 45°

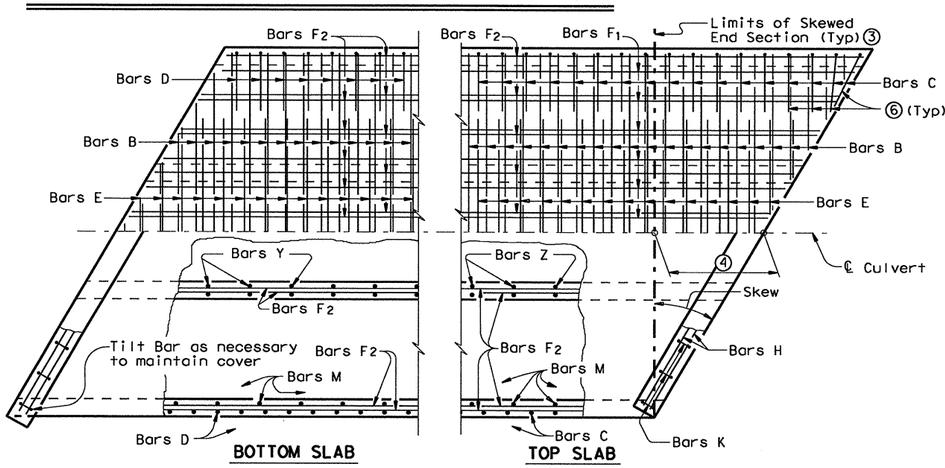

PLAN OF SKEWED ENDS ~ OVER 15° TO 30°

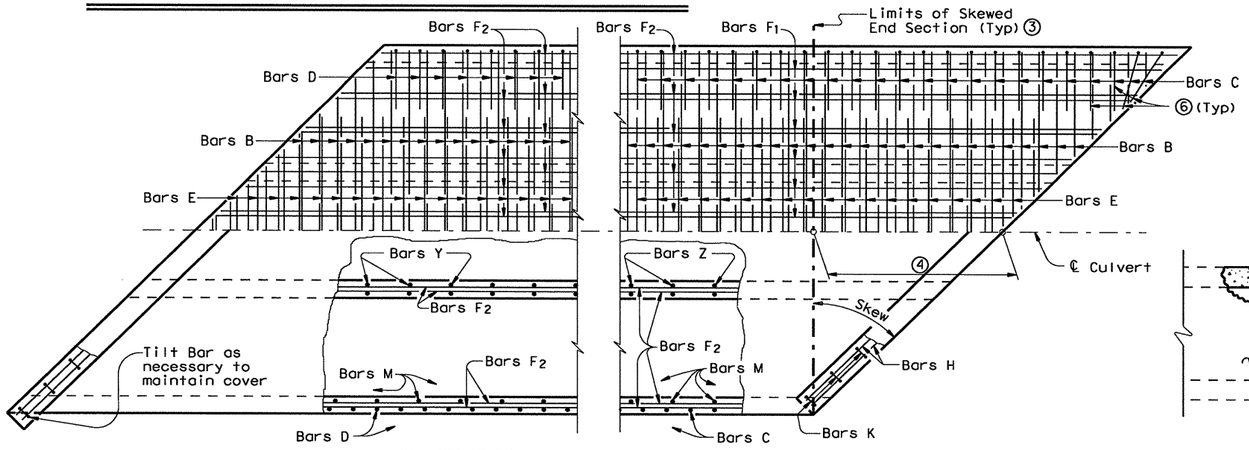

PLAN OF SKEWED ENDS ~ OVER 30° TO 45°

GENERAL NOTES:

Designed according to AASHTO LRFD Specifications.

All reinforcing steel shall be Grade 60.

All concrete shall be Class "C" with these exceptions: use Class "S" for top slabs of culverts with overlay, with 1-to-2 course surface treatment, or with the top slab as the final riding surface.

Class "C" concrete shall have a minimum compressive strength of 3,600 psi. Class "S" concrete shall have a minimum compressive strength of 4,000 psi.

Refer to Multiple Box Culverts Cast-in-Place standard for details of straight sections of culvert. For skewed sections and angle sections refer to Multiple Box Culverts Cast-in-Place standard for slab and wall dimensions, bar sizes, maximum bar spacing, and any other details not shown. For Skewed ends with curbs, adjust length of Bars H, number of Bars K, curb concrete volume and reinforcing steel weight by dividing the values shown on the culvert standards by the cosine of the skew angle.

The use of permanent forms is not allowed.

Laps for Bars H, when required, shall be 1'-9" for uncoated bars and 2'-7" for epoxy coated.

①For box culverts with less than 2'-0" of fill, the top slab shall be broken back to provide a minimum 1'-10" lap of the existing longitudinal bars with the longitudinal bars in the extension. If the depth of fill is 2'-0" or greater, the top slab shall be broken back to provide a 1'-0" minimum embedment of existing longitudinal reinforcing into the extension. Alternatively, if the fill height is greater than 2'-0", the existing curb may be left in place and 2'-0" long #6 bars shall be drilled and grouted 1'-0" into the existing top slab at 1'-6" center to center spacing. Wings and apron shall be broken back as necessary to install the extension. Exposed wingwall and apron reinforcing may be removed or cleaned and included in the extension. When lengthening existing box culverts with dimensions different than current standard dimensions, horizontal and vertical transitions shall be formed as directed by the Engineer. Bottom slabs shall match to maintain an uninterrupted flow line. Existing and new reinforcing shall be field bent into transition maintaining specified cover requirements. For top slabs of culverts with overlay, with 1-to-2 course surface treatment, or with the top slab as the final riding surface, the "H" dimension may be adjusted to provide a smooth riding surface.

②When the spacing between Bars B or Bars E becomes less than half of the normal spacing, bars shall be cut to avoid fouling

③The length of Bars B and E will vary in the skewed end sections

④[One half of overall width] x [Tan of the skew angle]

⑤Bars F1 and F2 shall be continuous through the angle section. They shall be bent to remain parallel to the walls of the Box Culvert.

⑥When necessary to avoid fouling in acute corners, the slab extension leg of Bars C and Bars D may be shortened to a minimum of 1'-6" for skews of 30° and 45°.

⑦For skews of 15° or less, the contractor has the option of placing Bars B, C, D and E parallel to the skewed end while maintaining spacing along centerline box. Lengths of Bars B and E shown on the standards shall be increased to accommodate the skew.

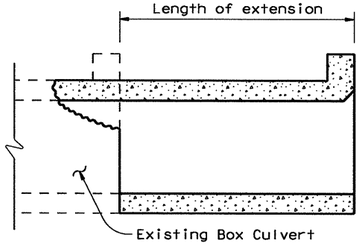

LENGTHENING DETAIL ①

HL93 LOADING

Texas Department of Transportation
Bridge Division

MULTIPLE BOX CULVERTS CAST-IN-PLACE MISCELLANEOUS DETAILS

MC-MD

FILE: mc-mdste.dgn	DN: GAF	CK: LMW	DW: BWH/TxDOT	CK: GAF
© TxDOT February 2010	DISTRICT	STATE PROJECT NO.		SHEET
REVISIONS	18	(SEE TITLE SHEET)		308

COUNTY	CONTROL	SECT	JOB	HIGHWAY
COLLIN	0091	04	055	SH 289

DISCLAIMER:
The use of this standard is governed by the "Texas Engineering Practice Act". No warranty of any kind is made by TxDOT for any purpose whatsoever. TxDOT assumes no responsibility for the conversion of this standard to other formats or for incorrect results or damages resulting from its use.

COMMENTS:

SPLAYED

ACTIVE FILE LEV.

R-201104-01

TABLE OF DIMENSIONS & REINFORCING STEEL
(Wings for One Structure End)

Dimensions					Variable Reinforcing				Estimated ④ Quantities per ft of wing (2~Wings)		Estimated Quantities per ft of Toewall (1~Toewall)	
					Bars J1		Bars J2					
Maximum Wingwall Height Hw	W	X	Y	Z	Size	Spa	Size	Spa	Reinf (Lb/Ft)	Conc (CY/Ft)	Reinf (Lb/Ft)	Conc (CY/Ft)
2'-6"	2'-10"	10"	1'- 0"	7"	#4	1'-0"	#4	1'-0"	48.64	0.406	6.85	0.071
2'-9"	2'-10"	10"	1'- 0"	7"	#4	1'-0"	#4	1'-0"	49.31	0.424	6.85	0.071
3'-0"	2'-10"	10"	1'- 0"	7"	#4	1'-0"	#4	1'-0"	49.98	0.444	6.85	0.071
3'-3"	2'-10"	10"	1'- 0"	7"	#4	1'-0"	#4	1'-0"	53.32	0.462	6.85	0.071
3'-6"	2'-10"	10"	1'- 0"	7"	#4	1'-0"	#4	1'-0"	53.98	0.480	6.85	0.071
4'-0"	3'- 2"	1'- 2"	1'- 0"	7"	#4	1'-0"	#4	1'-0"	55.77	0.532	6.85	0.071
4'-6"	3'- 2"	1'- 2"	1'- 0"	7"	#4	1'-0"	#4	1'-0"	59.77	0.568	6.85	0.071
5'-0"	3'- 9"	1'- 7"	1'- 2"	7"	#4	1'-0"	#4	1'-0"	63.45	0.632	6.96	0.075
5'-6"	3'- 9"	1'- 7"	1'- 2"	7"	#4	1'-0"	#4	1'-0"	67.46	0.668	6.96	0.075
6'-0"	4'- 4"	2'- 0"	1'- 4"	7"	#5	1'-0"	#5	1'-0"	80.67	0.730	7.07	0.078
6'-6"	4'- 4"	2'- 0"	1'- 4"	7"	#5	1'-0"	#5	1'-0"	85.05	0.768	7.07	0.078
7'-0"	5'- 0"	2'- 3"	1'- 9"	8"	#5	1'-0"	#5	1'-0"	92.15	0.864	8.07	0.093
7'-6"	5'- 0"	2'- 3"	1'- 9"	8"	#5	1'-0"	#5	1'-0"	96.54	0.902	8.07	0.093
8'-0"	5'- 6"	2'- 8"	1'-10"	8"	#5	6"	#5	6"	139.04	0.962	8.13	0.095
8'-6"	5'- 6"	2'- 8"	1'-10"	8"	#5	6"	#5	6"	144.47	1.000	8.13	0.095
9'-6"	6'- 0"	2'-10"	2'- 2"	9"	#5	6"	#5	6"	156.93	1.136	8.41	0.110
10'-6"	6'- 5"	3'- 0"	2'- 5"	9"	#6	6"	#5	6"	196.27	1.234	8.57	0.117
11'-6"	7'- 2"	3'- 6"	2'- 8"	11"	#6	6"	#6	6"	230.13	1.438	9.52	0.140
12'-6"	7'- 8"	3'- 9"	2'-11"	1'- 0"	#7	6"	#6	6"	283.41	1.592	9.74	0.157
13'-6"	8'- 2"	4'- 0"	3'- 2"	1'- 2"	#8	6"	#6	6"	348.72	1.804	10.02	0.186
14'-6"	8'-10"	4'- 5"	3'- 5"	1'- 4"	#9	6"	#6	6"	432.94	2.046	10.30	0.218
15'-6"	9'- 6"	4'-10"	3'- 8"	1'- 6"	#9	6"	#7	6"	489.52	2.302	11.24	0.253
16'-0"	9'-11"	5'- 0"	3'-11"	1'- 7"	#9	6"	#7	6"	505.72	2.448	11.47	0.279

TABLE OF WINGWALL REINFORCING (2~Wings)

Bar	Size	No.	Spa
D1	#6	~	1'-0"
D2	#6	~	1'-0"
E1	#4	~	1'-0"
F	#4	~	1'-0"
G	#6	~	8"
M1	#4	4	~
P	#4	~	1'-0"
V	#4	~	1'-0"

TABLE OF TOEWALL REINFORCING

Bar	Size	No	Spa
J3	#4	~	1'-0"
M2	#4	2	~
E2	#4	~	1'-0"

WING DIMENSION CALCULATIONS:

Formulas: (All values are in Feet)

Hw = H + T + C

Lw = (Hw) (SL) ÷ Cosine (θ)

For Cast-in-place culverts:

Ltw = [(N) (S) + (N + 1) (U)] ÷ (Cosine θ)

For Precast culverts:

Ltw = [(N) (2 U + S) + (N − 1) (0.5')] ÷ (Cosine θ)

Total Wingwall Area (Two Wings ~ S.F.) = (2) (Hw) (Lw)

Hw = Height of Wingwall
Lw = Length of Wingwall
Ltw = Culvert Toewall Length
N = Number of Culvert Spans
SL:1 = Channel Slope ratio. (Horizontal: 1 Vertical, Usual value is 2:1)
θ = Culvert Skew

See applicable box culvert standard for S, H, T and U values.

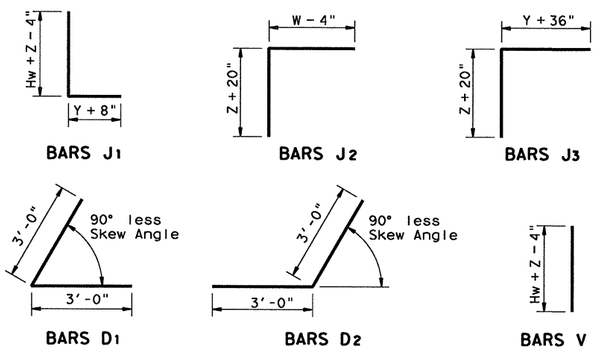

① Skew Angle = 0°

② At discharge end, chamfer may be ¾".

③ For 15° Skew ~ 1"
For 30° Skew ~ 2"
For 45° Skew ~ 3"

④ Quantities shown are for two wings. To determine total quantities for two wings, multiply the tabulated values by Lw. Quantities shown do not include weight for Bars D.

⑤ Provide weepholes for Hw = 5'-0" and greater. Fill around weepholes with coarse gravel.

⑥ Extend Bars E2 1'-6" minimum into the wingwall footing.

⑦ Lap Bars M1 1'-6" minimum with Bars M2.

⑧ Bars G shall be equally spaced at 8" maximum, placed as shown. There shall be at least two pair Bars G per wing.

⑨ 0" min to 5'-0" max. Estimated curb heights are shown elsewhere in the plans. For structures with pedestrian rail, bicycle rail or curbs taller than 1'-0", refer to ECD standard. For structures with T6 bridge rail, refer to T6-CM standard. For structures with traffic rail, other than T6, refer to RAC standard.

⑩ For vehicle safety, the following requirements must be met:
- For structures without bridge rail, curbs shall project no more than 3" above finished grade.
- For structures with bridge rail, curbs shall be flush with finished grade.

Curb heights shall be reduced, if necessary, to meet the above requirements. No changes will be made in quantities and no additional compensation will be allowed for this work.

⑪ 1'-0" typical. 2'-0" typical when RAC standard is referenced elsewhere in the plans.

GENERAL NOTES:

Designed according to AASHTO LRFD Specifications.
All reinforcing steel shall be Grade 60.
All concrete shall be Class "C" and shall have a minimum compressive strength of 3600 psi.
All reinforcing bars shall be adjusted to provide a minimum of 1 ¼" clear cover.
When structure is founded on solid rock, depth of toewalls for culverts and wingwalls may be reduced or eliminated as directed by the Engineer.
See BCS sheet for additional dimensions and information.
The quantities for concrete and reinforcing steel resulting from the formulas given on this sheet are for Contractor's information only.

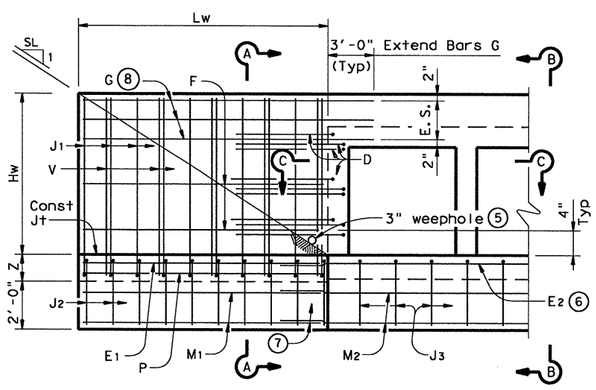

PARTIAL ELEVATION

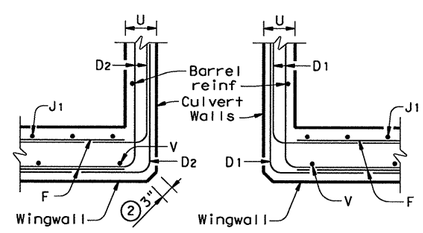

SECTION C-C

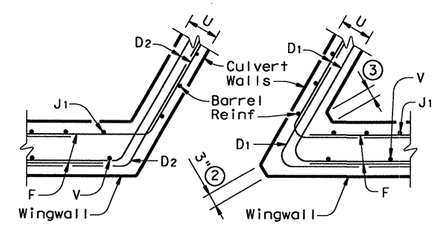

SECTION C-C

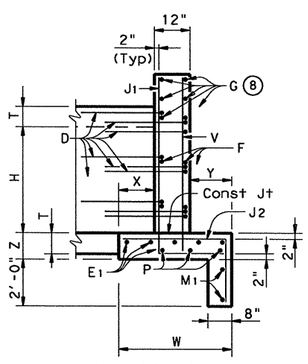

SECTION A-A
(Showing Wing Reinf)

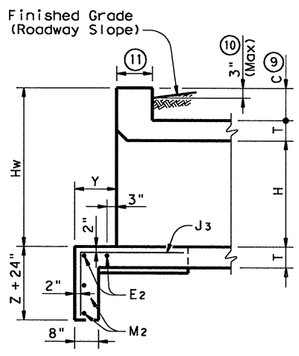

SECTION B-B
(Showing Toewall Reinf)

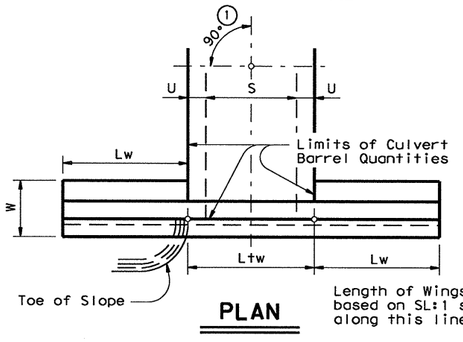

PLAN

DETAILS FOR NON-SKEWED BOX CULVERTS

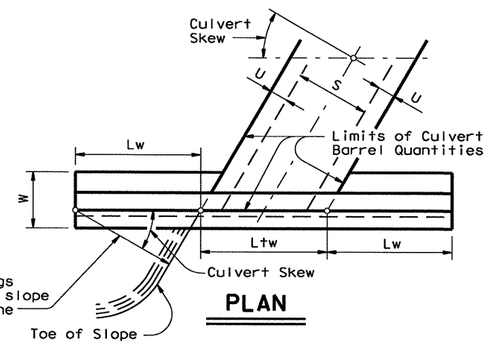

PLAN

DETAILS FOR SKEWED BOX CULVERTS
(Showing 30° Skew)

DISCLAIMER:
The use of this standard is governed by the "Texas Engineering Practice Act". No warranty of any kind is made by TxDOT for any purpose whatsoever. TxDOT assumes no responsibility for the conversion of this standard to other formats or for incorrect results or damages resulting from its use.

ACC:
LEVELS
1

Texas Department of Transportation
Bridge Division

CONCRETE WINGWALLS WITH PARALLEL WINGS FOR SKEWED AND NON-SKEWED BOX CULVERTS

PW

FILE: pwstde01.dgn	DN: GAF	CK: CAT	DW: TxDOT	CK: GAF
© TxDOT February 2010	DISTRICT	STATE PROJECT NO.		SHEET
REVISIONS 11-10: Reinforcing Quantities.	18	(SEE TITLE SHEET		369
	COUNTY	CONTROL	SECT	JOB	HIGHWAY
	COLLIN	0091	04	055	SH 289

R-201104-01

TABLE OF DIMENSIONS & REINFORCING STEEL
(Wings for One Structure End)

Dimensions					Variable Reinforcing				Estimated Quantities (3) per ft of wing length (2~Wings)	
Maximum Wingwall Height Hw	W	X	Y	Z	Bars J1		Bars J2			
					Size	Spa	Size	Spa	Reinf (Lb/Ft)	Conc (CY/Ft)
2'-6"	2'- 5"	1'- 0"	9"	7"	#4	1'-0"	#4	1'-0"	33.73	0.248
3'-0"	2'- 5"	1'- 0"	9"	7"	#4	1'-0"	#4	1'-0"	37.07	0.261
3'-6"	2'- 5"	1'- 0"	9"	7"	#4	1'-0"	#4	1'-0"	37.74	0.273
4'-0"	2'- 5"	1'- 0"	9"	7"	#4	1'-0"	#4	1'-0"	38.41	0.285
4'-6"	3'- 2"	1'- 6"	1'- 0"	7"	#4	1'-0"	#4	1'-0"	41.75	0.330
5'-0"	3'- 2"	1'- 6"	1'- 0"	7"	#4	1'-0"	#4	1'-0"	45.09	0.343
5'-6"	3'- 2"	1'- 6"	1'- 0"	7"	#4	1'-0"	#4	1'-0"	45.75	0.355
6'-0"	3'- 2"	1'- 6"	1'- 0"	7"	#4	1'-0"	#4	1'-0"	46.42	0.367
7'-0"	3'- 8"	1'- 9"	1'- 3"	7"	#4	1'-0"	#4	1'-0"	52.77	0.414
8'-0"	4'- 2"	2'- 0"	1'- 6"	8"	#5	1'-0"	#4	1'-0"	60.19	0.486
9'-0"	4'- 8"	2'- 3"	1'- 9"	8"	#4	6"	#4	6"	81.49	0.535
10'-0"	5'- 2"	2'- 6"	2'- 0"	8"	#5	6"	#4	6"	97.25	0.584
11'-0"	5'- 8"	2'- 9"	2'- 3"	8"	#6	6"	#5	6"	133.65	0.634
12'-0"	6'- 2"	3'- 0"	2'- 6"	9"	#7	6"	#5	6"	162.29	0.721
13'-0"	6'- 8"	3'- 3"	2'- 9"	11"	#7	6"	#5	6"	178.80	0.856
14'-0"	7'- 2"	3'- 6"	3'- 0"	1'- 0"	#8	6"	#5	6"	216.78	0.959
15'-0"	7'- 8"	4'- 0"	3'- 0"	1'- 1"	#9	6"	#6	6"	283.06	1.068
16'-0"	8'- 2"	4'- 6"	3'- 0"	1'- 3"	#9	6"	#6	6"	297.02	1.234

TABLE OF WINGWALL REINFORCING (2~Wings)

Bar	Size	No.	Spa
D	#5	~	1'-0"
E	#4	~	1'-0"
F	#4	~	1'-0"
G	#6	4	~
M	#4	4	~
P	#4	~	1'-0"
R	#5	6	~
V	#4	~	1'-0"

TABLE OF ESTIMATED CULVERT TOEWALL QUANTITIES

Bar	Size	No.	Spa
L	#4	~	1'-6"
Q	#4	1	~
Reinf (Lb/Ft)			2.45
Conc (CY/Ft)			0.037

WING DIMENSION CALCULATIONS:

Formulas: (All values are in Feet)

Hw = H + T + C − 0.250'

Lw = (Hw − 0.333') (SL)

For Cast-in-place culverts:

Ltw = (N) (S) + (N + 1) (U)

For Precast culverts:

Ltw = (N) (2U + S) + (N − 1) (0.5')

Total Wingwall Area (Two Wings ~ S.F.) = (Hw + 0.333') (Lw)

Hw = Height of Wingwall
SL:1 = Side Slope Ratio (Horizontal:1 Vertical)
Lw = Length of Wingwall
Ltw = Culvert Toewall Length
N = Number of Culvert Spans

See applicable box culvert standard for H, S, T, and U values.

1. Extend Bars P 3'-0" minimum into bottom slab of Box Culvert.
2. Adjust to fit as necessary to maintain 1 1/4" clear cover and 4" minimum between bars.
3. Quantities shown are based on an average wing height for two wings (one structure end). To determine total quantities for two wings multiply the tabulated values by Lw.
4. Recommended values of Slope are: 2:1, 3:1, 4:1, & 6:1.
5. When shown elsewhere on the plans, a 5" deep concrete riprap shall be constructed. Payment for riprap shall be as required by Item 432, "Riprap". Unless otherwise shown on the plans or directed by the Engineer, the riprap shall have a 6" wide by 1'-6" deep reinforced concrete toewall along all edges adjacent to natural ground; the toewall shall be reinforced by extending typical riprap reinforcing into the toewall; construction joints or grooved joints, oriented in the direction of flow, shall extend across the full distance of the riprap, at intervals of approximately 20'. When such riprap is provided, the culvert toewall shown in SECTION B-B will not be required.
6. At Contractor's option, Culvert Toewall may be ended flush with Wingwall Toewall. Adjust reinforcing from that shown as necessary.
7. 0" min to 5'-0" max. Estimated curb heights are shown elsewhere in the plans. For structures with pedestrian rail, bicycle rail or curbs taller than 1'-0", refer to ECD standard. For structures with T6 bridge rail, refer to T6-CM standard. For structures with traffic rail, other than T6, refer to RAC standard.
8. For vehicle safety, curb heights and wall heights shall be reduced, if necessary, to provide a maximum 3" projection above finished grade. No changes will be made in quantities and no additional compensation will be allowed for this work.

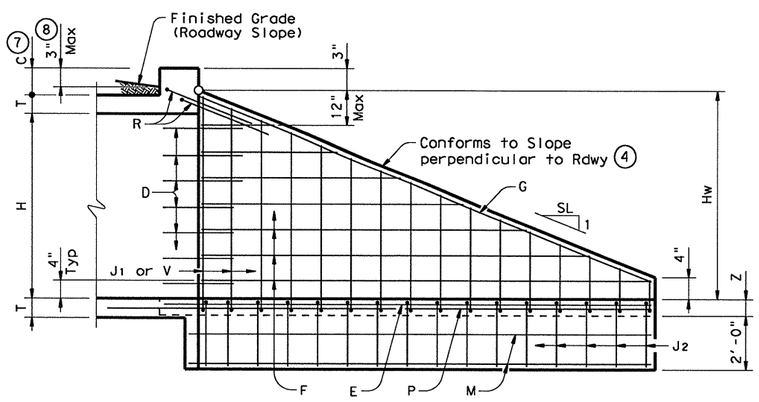

INSIDE ELEVATION

(Showing reinforcing. Culvert and Culvert Toewall reinforcing not shown for clarity.)

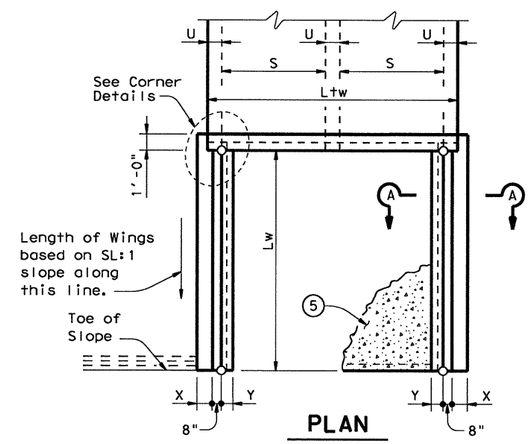

PLAN

(Showing Dimensions)

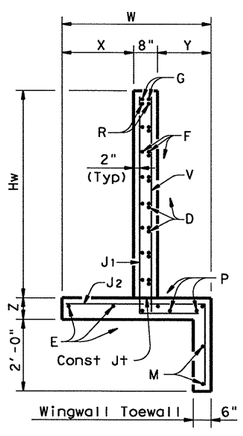

SECTION A-A

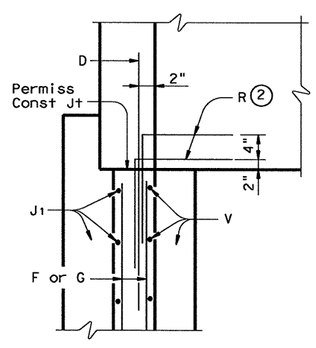

WINGWALL

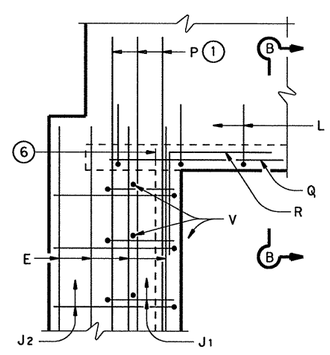

FOOTING AND TOEWALL

CORNER DETAILS

(Culvert and Culvert Toewall reinforcing not shown for clarity.)

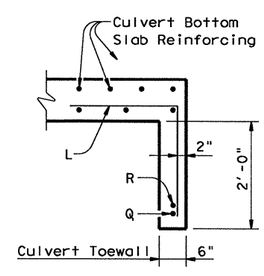

SECTION B-B (5)

GENERAL NOTES:

Designed according to AASHTO LRFD Specifications.

All reinforcing steel shall be Grade 60.

Synthetic fibers listed on the "Fibers for Concrete" Material Producer List (MPL) may be used in lieu of steel reinforcing in riprap concrete unless noted otherwise.

All concrete shall be Class "C" and shall have a minimum compressive strength of 3600 psi.

All reinforcing bars shall be adjusted to provide a minimum of 1 1/4" clear cover.

When structure is founded on solid rock, depth of toewalls for culverts and wingwalls may be reduced or eliminated as directed by the Engineer.

See BCS sheet for additional dimensions and information.

The quantities for concrete and reinforcing steel resulting from the formulas given on this sheet are for Contractor's information only.

DISCLAIMER:
The use of this standard is governed by the "Texas Engineering Practice Act". No warranty of any kind is made by TxDOT for any purpose whatsoever. TxDOT assumes no responsibility for the conversion of this standard to other formats or for incorrect results or damages resulting from its use.

COMMENTS:

LEVELS OF DETAIL

Texas Department of Transportation
Bridge Division

CONCRETE WINGWALLS WITH STRAIGHT WINGS FOR 0° SKEW BOX CULVERTS

SW-0

FILE: sw-0stde.dgn	DN: GAF	CK: CAT	DW: TxDOT	CK: GAF
© TxDOT February 2010	DISTRICT	STATE PROJECT NO.		SHEET
REVISIONS 11-10: Add note for synthetic fibers.	18	(SEE TITLE SHEET)		370
	COUNTY	CONTROL	SECT	JOB	HIGHWAY
	COLLIN	0091	04	055	SH 289

R-201104-01

TABLE OF DIMENSIONS & REINFORCING STEEL
(Wings for One Structure End)

Dimensions					Variable Reinforcing				Estimated Quantities (3) per ft of wing length (2~Wings)	
Maximum Wingwall Height Hw	W	X	Y	Z	Bars J1		Bars J2			
					Size	Spa	Size	Spa	Reinf (Lb/Ft)	Conc (CY/Ft)
2'-6"	2'- 5"	1'- 0"	9"	7"	#4	1'-0"	#4	1'-0"	33.73	0.248
3'-0"	2'- 5"	1'- 0"	9"	7"	#4	1'-0"	#4	1'-0"	37.07	0.261
3'-6"	2'- 5"	1'- 0"	9"	7"	#4	1'-0"	#4	1'-0"	37.74	0.273
4'-0"	2'- 5"	1'- 0"	9"	7"	#4	1'-0"	#4	1'-0"	38.41	0.285
4'-6"	3'- 2"	1'- 6"	1'- 0"	7"	#4	1'-0"	#4	1'-0"	41.75	0.330
5'-0"	3'- 2"	1'- 6"	1'- 0"	7"	#4	1'-0"	#4	1'-0"	45.09	0.343
5'-6"	3'- 2"	1'- 6"	1'- 0"	7"	#4	1'-0"	#4	1'-0"	45.75	0.355
6'-0"	3'- 2"	1'- 6"	1'- 0"	7"	#4	1'-0"	#4	1'-0"	46.42	0.367
7'-0"	3'- 8"	1'- 9"	1'- 3"	7"	#4	1'-0"	#4	1'-0"	52.77	0.414
8'-0"	4'- 2"	2'- 0"	1'- 6"	8"	#5	1'-0"	#4	1'-0"	60.19	0.486
9'-0"	4'- 8"	2'- 3"	1'- 9"	8"	#4	6"	#4	6"	81.49	0.535
10'-0"	5'- 2"	2'- 6"	2'- 0"	8"	#5	6"	#4	6"	97.25	0.584
11'-0"	5'- 8"	2'- 9"	2'- 3"	8"	#6	6"	#5	6"	133.65	0.634
12'-0"	6'- 2"	3'- 0"	2'- 6"	9"	#7	6"	#5	6"	162.29	0.721
13'-0"	6'- 8"	3'- 3"	2'- 9"	11"	#7	6"	#5	6"	178.80	0.856
14'-0"	7'- 2"	3'- 6"	3'- 0"	1'- 0"	#8	6"	#5	6"	216.78	0.959
15'-0"	7'- 8"	4'- 0"	3'- 0"	1'- 1"	#9	6"	#6	6"	283.06	1.068
16'-0"	8'- 2"	4'- 6"	3'- 0"	1'- 3"	#9	6"	#6	6"	297.02	1.234

TABLE OF WINGWALL REINFORCING (2~Wings)

Bar	Size	No.	Spa
D	#5	~	1'-0"
E	#4	~	1'-0"
F	#4	~	1'-0"
G	#6	4	~
M	#4	4	~
P	#4	~	1'-0"
R	#5	6	~
V	#4	~	1'-0"

TABLE OF ESTIMATED CULVERT TOEWALL QUANTITIES

Bar	Size	No.	Spa
L	#4	~	1'-6"
Q	#4	1	~
Reinf (Lb/Ft)			2.45
Conc (CY/Ft)			0.037

WING DIMENSION CALCULATIONS:

Formulas: (All values are in Feet)

Hw = H + T + C − 0.250'

A = (Hw − 0.333') (SL)

B = (A) Tangent (30°)

Lw = (A) ÷ Cosine (30°)

For Cast-in-place culverts:

Ltw = (N) (S) + (N + 1) (U)

For Precast culverts:

Ltw = (N) (2U + S) + (N − 1) (0.500')

Total Wingwall Area (Two Wings ~ S.F.) = (Hw + 0.333') (Lw)

Hw = Height of Wingwall
SL:1 = Side Slope Ratio (Horizontal:1 Vertical)
Lw = Length of Wingwall
Ltw = Culvert Toewall Length
N = Number of Culvert Spans

See applicable box culvert standard for H, S, T, and U values.

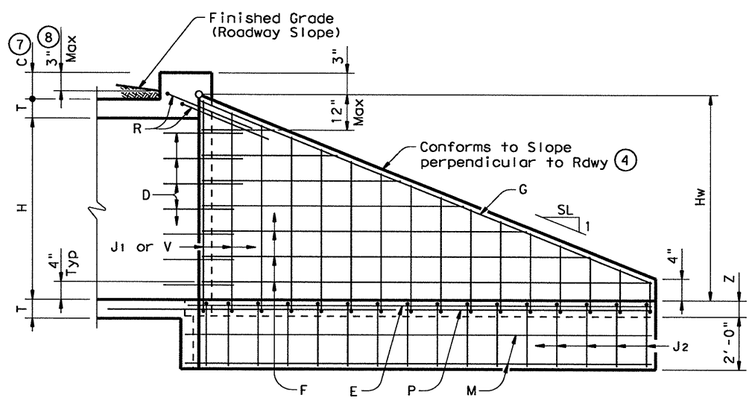

INSIDE ELEVATION
(Showing reinforcing. Culvert and Culvert Toewall reinforcing not shown for clarity.)

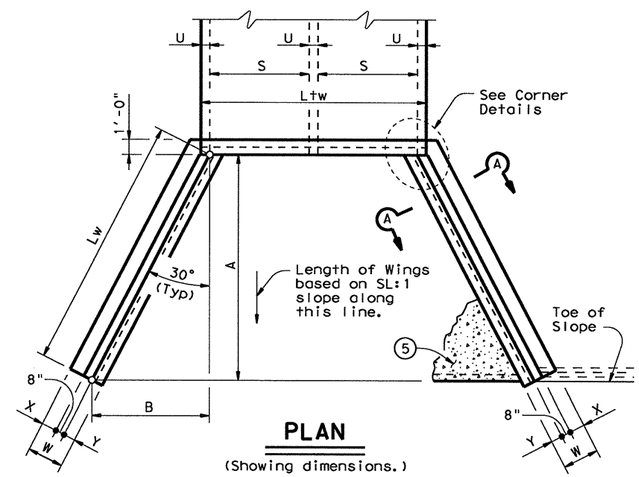

PLAN
(Showing dimensions.)

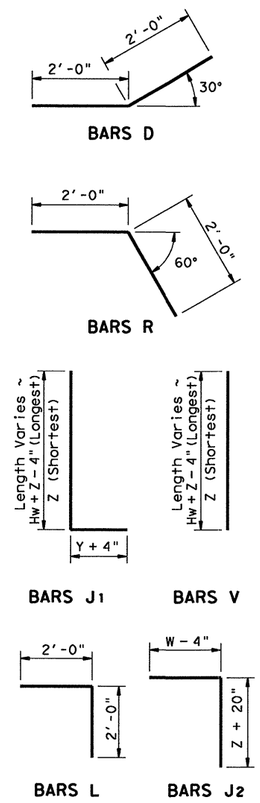

1. Extend Bars P 3'-0" minimum into bottom slab of Box Culvert.
2. Adjust to fit as necessary to maintain 1 ¼" clear cover and 4" minimum between bars.
3. Quantities shown are based on an average wing height for two wings (one structure end). To determine total quantities for two wings multiply the tabulated values by Lw.
4. Recommended values of Slope are: 2:1, 3:1, 4:1, & 6:1.
5. When shown elsewhere on the plans, a 5" deep concrete riprap shall be constructed. Payment for riprap shall be as required by Item 432, "Riprap". Unless otherwise shown on the plans or directed by the Engineer, the riprap shall have a 6" wide by 1'-6" deep reinforced concrete toewall along all edges adjacent to natural ground; the toewall shall be reinforced by extending typical riprap reinforcing into the toewall; construction joints or grooved joints, oriented in the direction of flow, shall extend across the full distance of the riprap, at intervals of approximately 20'. When such riprap is provided, the culvert toewall shown in SECTION B-B will not be required.
6. At Contractor's option, Culvert Toewall may be ended flush with Wingwall Toewall. Adjust reinforcing from that shown as necessary.
7. 0" min to 5'-0" max. Estimated curb heights are shown elsewhere in the plans. For structures with pedestrian rail, bicycle rail or curbs taller than 1'-0", refer to ECD standard. For structures with T6 bridge rail, refer to T6-CM standard. For structures with traffic rail, other than T6, refer to RAC standard.
8. For vehicle safety, curb heights and wall heights shall be reduced, if necessary, to provide a maximum 3" projection above finished grade. No changes will be made in quantities and no additional compensation will be allowed for this work.

GENERAL NOTES:

Designed according to AASHTO LRFD Specifications.
All reinforcing steel shall be Grade 60.
Synthetic fibers listed on the "Fibers for Concrete" Material Producer List (MPL) may be used in lieu of steel reinforcing in riprap concrete unless noted otherwise.
All concrete shall be Class "C" and shall have a minimum compressive strength of 3600 psi.
All reinforcing bars shall be adjusted to provide a minimum of 1 ¼" clear cover.
When structure is founded on solid rock, depth of toewalls for culverts and wingwalls may be reduced or eliminated as directed by the Engineer.
See BCS sheet for additional dimensions and information.
The quantities for concrete and reinforcing steel resulting from the formulas given on this sheet are for Contractor's information only.

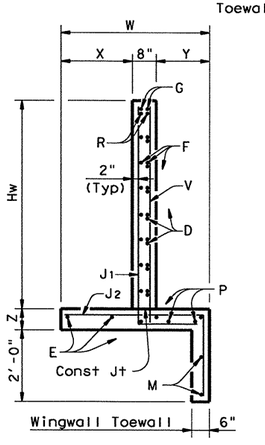

SECTION A-A

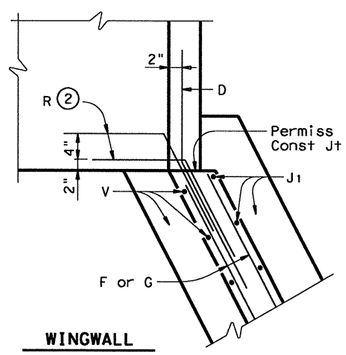

WINGWALL

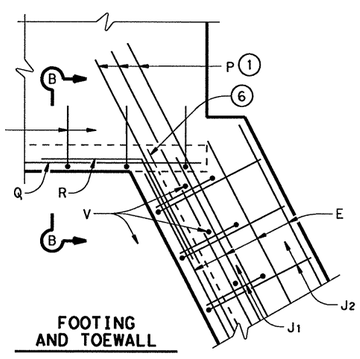

FOOTING AND TOEWALL

CORNER DETAILS
(Culvert and Culvert Toewall reinforcing not shown for clarity.)

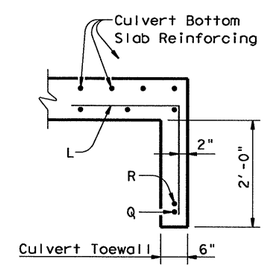

SECTION B-B (5)

Texas Department of Transportation
Bridge Division

CONCRETE WINGWALLS WITH FLARED WINGS FOR 0° SKEW BOX CULVERTS

FW-0

FILE: fw-0stde.dgn	DN: GAF	CK: CAT	DW: TxDOT	CK: GAF
© TxDOT February 2010	DISTRICT	STATE PROJECT NO.		SHEET
REVISIONS 11-10: Add note for synthetic fibers.	18	(SEE TITLE SHEET)		371
	COUNTY	CONTROL	SECT	JOB	HIGHWAY
	COLLIN	0091	04	055	SH 289

DISCLAIMER:
The use of this standard is governed by the "Texas Engineering Practice Act". No warranty of any kind is made by TxDOT for any purpose whatsoever. TxDOT assumes no responsibility for the conversion of this standard to other formats or for incorrect results or damages resulting from its use.

COMMENTS:

LEVELS D1 D2

R-201104-01

TABLE OF DIMENSIONS & REINFORCING STEEL
(Wings for One Structure End)

Dimensions					Variable Reinforcing				Estimated Quantities (3) per ft of wing length (2~Wings)	
					Bars J1		Bars J2			
Maximum Wingwall Height Hw	W	X	Y	Z	Size	Spa	Size	Spa	Reinf (Lb/Ft)	Conc (CY/Ft)
2'-6"	2'- 5"	1'- 0"	9"	7"	#4	1'-0"	#4	1'-0"	33.73	0.248
3'-0"	2'- 5"	1'- 0"	9"	7"	#4	1'-0"	#4	1'-0"	37.07	0.261
3'-6"	2'- 5"	1'- 0"	9"	7"	#4	1'-0"	#4	1'-0"	37.74	0.273
4'-0"	2'- 5"	1'- 0"	9"	7"	#4	1'-0"	#4	1'-0"	38.41	0.285
4'-6"	3'- 2"	1'- 6"	1'- 0"	7"	#4	1'-0"	#4	1'-0"	41.75	0.330
5'-0"	3'- 2"	1'- 6"	1'- 0"	7"	#4	1'-0"	#4	1'-0"	45.09	0.343
5'-6"	3'- 2"	1'- 6"	1'- 0"	7"	#4	1'-0"	#4	1'-0"	45.75	0.355
6'-0"	3'- 2"	1'- 6"	1'- 0"	7"	#4	1'-0"	#4	1'-0"	46.42	0.367
7'-0"	3'- 8"	1'- 9"	1'- 3"	7"	#4	1'-0"	#4	1'-0"	52.77	0.414
8'-0"	4'- 2"	2'- 0"	1'- 6"	8"	#5	1'-0"	#4	1'-0"	60.19	0.486
9'-0"	4'- 8"	2'- 3"	1'- 9"	8"	#4	6"	#4	6"	81.49	0.535
10'-0"	5'- 2"	2'- 6"	2'- 0"	8"	#5	6"	#4	6"	97.25	0.584
11'-0"	5'- 8"	2'- 9"	2'- 3"	8"	#6	6"	#5	6"	133.65	0.634
12'-0"	6'- 2"	3'- 0"	2'- 6"	9"	#7	6"	#5	6"	162.29	0.721
13'-0"	6'- 8"	3'- 3"	2'- 9"	11"	#7	6"	#5	6"	178.80	0.856
14'-0"	7'- 2"	3'- 6"	3'- 0"	1'- 0"	#8	6"	#5	6"	216.78	0.959
15'-0"	7'- 8"	4'- 0"	3'- 0"	1'- 1"	#9	6"	#6	6"	283.06	1.068
16'-0"	8'- 2"	4'- 6"	3'- 0"	1'- 3"	#9	6"	#6	6"	297.02	1.234

TABLE OF WINGWALL REINFORCING (2~Wings)

Bar	Size	No.	Spa
DL	#5	~	1'-0"
DS	#5	~	1'-0"
E	#4	~	1'-0"
F	#4	~	1'-0"
G	#6	4	~
M	#4	4	~
P	#4	~	1'-0"
RS	#5	3	~
RL	#5	3	~
V	#4	~	1'-0"

TABLE OF ESTIMATED CULVERT TOEWALL QUANTITIES

Bar	Size	No.	Spa
L	#4	~	1'-6"
Q	#4	1	~
Reinf (Lb/Ft)			2.45
Conc (CY/Ft)			0.037

WING DIMENSION CALCULATIONS:

Formulas: (All values are in Feet)

Hw = H + T + C - 0.250'

A = (Hw - 0.333') (SL)

B = (A) [Tangent (θ + 15°)]

Lw = (A) ÷ [Cosine (θ + 15°)]

For Cast-in-place culverts:

Ltw = [(N) (S) + (N+1) (U)] ÷ (Cosine θ)

For Precast culverts:

Ltw = [(N) (2U+S) + (N-1) (0.500')] ÷ (Cosine θ)

Total Wingwall Area (Two Wings ~ S.F.) =
(0.5) (Hw + 0.333') (Lw + A)

Hw = Height of Wingwall
SL:1 = Side Slope Ratio (Horizontal:1 Vertical)
A = Length of Short Wingwall
Lw = Length of Long Wingwall
Ltw = Culvert Toewall Length
N = Number of Culvert Spans
θ = Culvert Skew

See applicable box culvert standard for H, S, T, and U values.

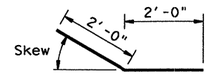

BARS DS
(Short Wing)

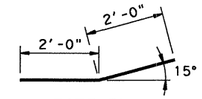

BARS DL
(Long Wing)

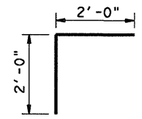

BARS RS
(Short Wing)

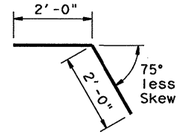

BARS RL
(Long Wing)

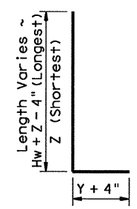

BARS J1

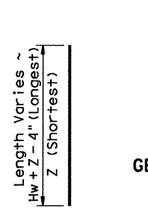

BARS V

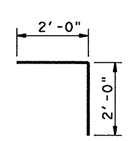

BARS L

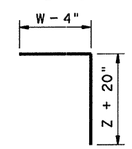

BARS J2

1. Extend Bars P 3'-0" minimum into bottom slab of Box Culvert.
2. Adjust to fit as necessary to maintain 1 ¼" clear cover and 4" minimum between bars.
3. Quantities shown are based on an average wing height for two wings (one structure end). To determine total quantities for two wings multiply the tabulated values by 0.5 x (A+Lw).
4. Recommended values of Slope are: 2:1, 3:1, 4:1, & 6:1.
5. When shown elsewhere on the plans, a 5" deep concrete riprap shall be constructed. Payment for riprap shall be as required by Item 432, "Riprap". Unless otherwise shown on the plans or directed by the Engineer, the riprap shall have a 6" wide by 1'-6" deep reinforced concrete toewall along all edges adjacent to natural ground; the toewall shall be reinforced by extending typical riprap reinforcing into the toewall; construction joints or grooved joints, oriented in the direction of flow, shall extend across the full distance of the riprap, at intervals of approximately 20'. When such riprap is provided, the culvert toewall shown in SECTION B-B will not be required.
6. At Contractor's option, Culvert Toewall may be ended flush with Wingwall Toewall. Adjust reinforcing from that shown as necessary.
7. Applicable values of of Skew are: 15°, 30°, and 45°.
8. Typical wingwall angle for all skews.
9. 0" min to 5'-0" max. Estimated curb heights are shown elsewhere in the plans. For structures with pedestrian rail, bicycle rail or curbs taller than 1'-0", refer to ECD standard. For structures with T6 bridge rail, refer to T6-CM standard. For structures with traffic rail, other than T6, refer to RAC standard.
10. For vehicle safety, curb heights and wall heights shall be reduced, if necessary, to provide a maximum 3" projection above finished grade. No changes will be made in quantities and no additional compensation will be allowed for this work.

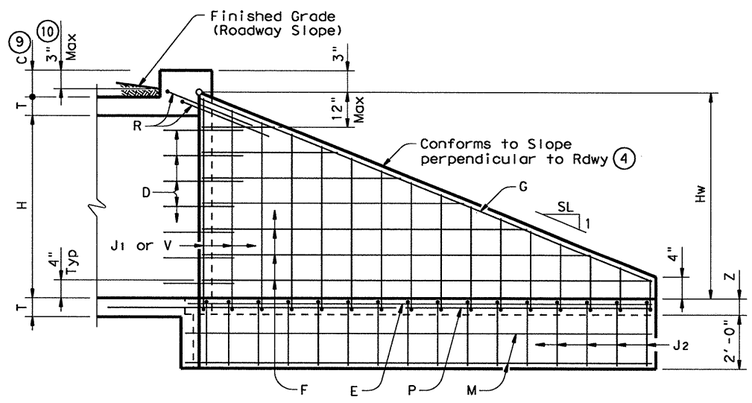

INSIDE ELEVATION

(Showing reinforcing. Culvert and Culvert Toewall reinforcing not shown for clarity.)

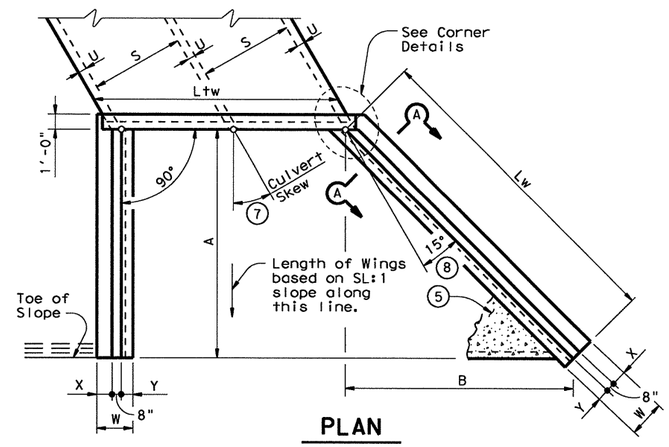

PLAN

(Showing dimensions and 30° Skew.)

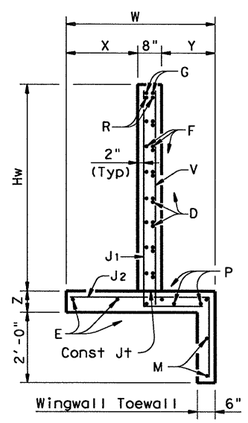

SECTION A-A

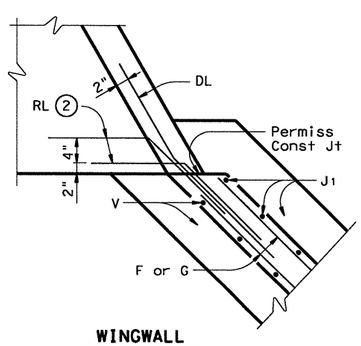

WINGWALL

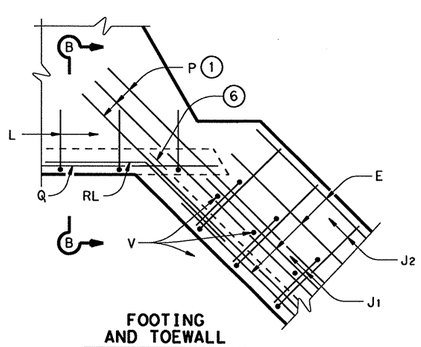

FOOTING AND TOEWALL

CORNER DETAILS

(Culvert and Culvert Toewall reinforcing not shown for clarity.)

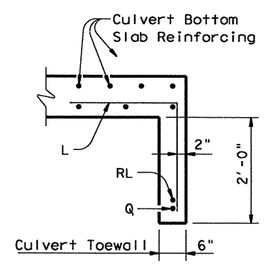

SECTION B-B (5)

GENERAL NOTES:

Designed according to AASHTO LRFD Specifications.

All reinforcing steel shall be Grade 60.

Synthetic fibers listed on the "Fibers for Concrete" Material Producer List (MPL) may be used in lieu of steel reinforcing in riprap concrete unless noted otherwise.

All concrete shall be Class "C" and shall have a minimum compressive strength of 3600 psi.

All reinforcing bars shall be adjusted to provide a minimum of 1 ¼" clear cover.

When structure is founded on solid rock, depth of toewalls for culverts and wingwalls may be reduced or eliminated as directed by the Engineer.

See BCS sheet for additional dimensions and information.

The quantities for concrete and reinforcing steel resulting from the formulas given on this sheet are for Contractor's information only.

DISCLAIMER:
The use of this standard is governed by the "Texas Engineering Practice Act". No liability is assumed by TxDOT for any purpose other than those shown on this standard. TxDOT assumes no responsibility for the conversion of this standard to other formats or for incorrect results or damages resulting from its use.

COMMENTS:

LEVELS D1: 1

Texas Department of Transportation
Bridge Division

CONCRETE WINGWALLS WITH FLARED WINGS FOR SKEWED BOX CULVERTS

FW-S

FILE: fw-sstde.dgn	DN: GAF	CK: CAT	DW: TxDOT	CK: GAF
©TxDOT February 2010	DISTRICT	STATE PROJECT NO.		SHEET
REVISIONS	18	(SEE TITLE SHEET)		312
11-10: Add note for synthetic fibers.	COUNTY	CONTROL	SECT	JOB	HIGHWAY
	COLLIN	0091	04	055	SH 289

R-201104-01

Culvert Station and/or Creek name followed by applicable end (Lt, Rt or Both)	Description of Box Culvert No. Spans ~ Span X Height	Max Fill Height (Ft)	Applicable Box Culvert Standard (4)	Applicable Wingwall or End Treatment Standard	Skew Angle (0°, 15°, 30° or 45°)	Side Slope or Channel Slope Ratio (SL:1)	T Culvert Top Slab Thickness (In)	U Culvert Wall Thickness (In)	C Estimated Curb Height (Ft)	Hw (1) Height of Wingwall (Ft)	A Curb to End of Wingwall (Ft)	B Offset of End of Wingwall (Ft)	Lw Length of Longest Wingwall (Ft)	Ltw Culvert Toewall Length (Ft)	Atw Anchor Toewall Length (Ft)	Riprap Apron (C.Y.)	Class (2) "C" Conc (Curb) (C.Y.)	Class (3) "C" Conc (Wingwall) (C.Y.)	Total Wingwall Area (S.F.)
CULVERT 2: STA 339+94.24 US (Rt)	2 ~ 8'x 6'	3.5'	SCP-8	PW	0°	4:1	8"	8"	2.490'	9.167'	N/A	N/A	36.667'	19.167'	N/A	0.0	1.8	43.8	672
CULVERT 2: STA 339+94.24 DS (Lt)	2 ~ 8'x 6'	3.5'	SCP-8	PW	0°	4:1	8"	8"	3.440'	10.104'	N/A	N/A	40.417'	19.167'	N/A	0.0	2.4	52.1	817
CULVERT 3: STA 377+67.00 US (Rt)	2 ~ 8'x 5'	3.2'	SCP-8	SW-0	0°	2:1	8"	8"	1.250'	6.667'	N/A	N/A	12.667'	19.167'	N/A	0.0	0.9	6.0	89
CULVERT 3: STA 377+67.00 DS (Lt)	2 ~ 8'x 5'	3.2'	SCP-8	SW-0	0°	2:1	8"	8"	2.250'	7.667'	N/A	N/A	14.667'	19.167'	N/A	0.0	1.6	7.8	117
CULVERT 4: STA 378+51.00 US (Rt)	1 ~ 6'x 3'	4'	SCP-6	FW-0	0°	3:1	7"	7"	1.360'	4.688'	13.063'	7.542'	15.083'	7.167'	N/A	0.0	0.4	5.4	76
CULVERT 4: STA 378+51.00 DS (Lt)	1 ~ 6'x 3'	4'	SCP-6	SW-0	0°	3:1	7"	7"	1.250'	4.583'	N/A	N/A	12.750'	7.167'	N/A	0.0	0.3	4.6	63
CULVERT 6: STA 401+71.57 US (Rt)	2 ~ 8'x 4'	3.85'	SCP-8	PW	0°	3:1	8"	8"	2.990'	7.667'	N/A	N/A	23.000'	19.167'	N/A	0.0	2.1	23.9	353
CULVERT 6: STA 401+71.57 DS (Lt)	2 ~ 8'x 4'	3.85'	SCP-8	PW	0°	3:1	8"	8"	3.190'	7.854'	N/A	N/A	23.563'	19.167'	N/A	0.0	2.3	24.5	370
CULVERT 8: STA 471+15.00 US (Rt)	2 ~ 6'x 4'	3.325'	SCP-6	PW	45°	3:1	7"	7"	1.750'	6.333'	N/A	N/A	26.870'	20.978'	N/A	0.0	1.4	22.3	340
CULVERT 8: STA 471+15.00 DS (Lt)	2 ~ 6'x 4'	3.325'	SCP-6	PW	45°	3:1	7"	7"	3.300'	7.875'	N/A	N/A	33.411'	20.978'	N/A	0.0	2.6	34.1	526
CULVERT 9: STA 493+61.32 US (Rt)	2 ~ 8'x 4'	7'	SCP-8	PW	0°	3:1	8"	8"	0.742'	5.417'	N/A	N/A	16.250'	19.167'	N/A	0.0	0.5	12.3	176
CULVERT 9: STA 493+61.32 DS (Lt)	2 ~ 8'x 4'	7'	SCP-8	PW	0°	3:1	8"	8"	4.396'	9.063'	N/A	N/A	27.188'	19.167'	N/A	0.0	3.1	33.0	493
DOE BRANCH: STA 308+91.41 US (Rt)	3 ~ 9'x 8'	3.9'	SCP-9	PW	15°	3:1	9"	9"	2.180'	10.938'	N/A	N/A	33.970'	33.646'	N/A	0.0	2.7	53.6	743
DOE BRANCH: STA 308+91.41 DS (Lt)	3 ~ 9'x 8'	3.9'	SCP-9	FW-S	15°	4:1	9"	9"	3.600'	12.104'	47.083'	27.184'	54.367'	33.646'	N/A	0.0	4.5	44.7	631
DOE BRANCH TRIB H: STA 391+53.32 US (Lt)	3 ~ 8'x 5'	4.65'	SCP-8	FW-0	0°	2:1	8"	8"	3.600'	9.021'	17.375'	10.031'	20.063'	29.000'	N/A	0.0	3.9	12.8	188
DOE BRANCH TRIB H: STA 391+53.32 DS (Rt)	3 ~ 8'x 5'	4.65'	SCP-8	PW	0°	2:1	8"	8"	4.130'	9.792'	N/A	N/A	19.583'	29.000'	N/A	0.0	4.4	27.6	384
DOE BRANCH TRIB G: STA 433+88.54 US (Lt)	3 ~10'x 5'	5.3'	SCP-10	PW	0°	4:1	10"	10"	4.200'	10.042'	N/A	N/A	40.167'	36.000'	N/A	0.0	5.6	53.8	807
DOE BRANCH TRIB G: STA 433+88.54 DS (Rt)	3 ~10'x 5'	5.3'	SCP-10	PW	0°	4:1	10"	10"	4.750'	10.583'	N/A	N/A	42.333'	36.000'	N/A	0.0	6.3	65.9	896
DB UNNAMED TRIB: STA 503+85.00 US (Lt)	2 ~12'x 6'	8.97'	SCP-12	PW	30°	2:1	12"	12"	5.000'	12.000'	N/A	N/A	27.713'	32.909'	N/A	0.0	6.1	49.3	665
DB UNNAMED TRIB: STA 503+85.00 DS (Rt)	2 ~12'x 6'	8.97'	SCP-12	PW	30°	3:1	12"	12"	2.640'	9.646'	N/A	N/A	33.414'	32.909'	N/A	0.0	3.2	45.1	645

DISCLAIMER:
The use of this standard is governed by the "Texas Engineering Practice Act". No warranty of any kind is made by TxDOT for any purpose whatsoever. TxDOT assumes no responsibility for the conversion of this standard to other formats or for incorrect results or damages resulting from its use.

NOTES:

Skew Angle = 0° for SW-0, FW-0, SETB-CD, SETB-SW-0, and SETB-FW-0 standards.
30° Maximum for Safety End Treatment

SL:1 = Horizontal:1 Vertical
Side Slope at culvert for Flared or Straight Wingwalls. Channel Slope for Parallel Wingwalls.
Slope shall be 3:1 or flatter for Safety End Treatments.

T = Box Culvert Top Slab Thickness. Dimension can be found on the applicable Box Culvert Standard.

U = Box Culvert Wall Thickness. Dimension can be found on the applicable Box Culvert Standard.

C = Curb Height.

See applicable wing or end treatment standards for calculations of Hw, A, B, Lw, Ltw, Atw, and Total Wingwall Area.
Hw = Height of Wingwall.
A = Distance from Face of Curb to End of Wingwall (Not applicable to Parallel or Straight Wingwalls).
B = Offset of End of Wingwall (Not applicable to Parallel or Straight Wingwalls).
Lw = Length of Longest Wingwall.
Ltw = Length of Culvert Toewall (Not applicable when using Riprap Apron).
Atw = Length of Anchor Toewall (Applicable to Safety End Treatment only).
Total Wingwall Area = Wingwall area in S.F. for two wingwalls (one structure end) if Lt or Rt.
Area for four wingwalls (two structure ends) if Both.

(1) The wall heights shown will be rounded to the nearest Foot for bidding purposes.

(2) Concrete volume shown is for box culvert curb only. For curbs using the RAC standard, quantities shown must be increased by a factor of 2. If Class "S" concrete is required for the top slab of the culvert, the curb concrete shall also be Class "S". Curb concrete is considered part of the Box Culvert for payment.

(3) Concrete volume shown is total of wing, footing, culvert toewall (if any), anchor toewall (if any) and wingwall toewall. Riprap apron, culvert and curb quantities are not included.

(4) Regardless of the type of culvert shown on this sheet, the Contractor shall have the option of furnishing cast-in-place or precast culverts unless otherwise shown elsewhere on the plans. If the Contractor elects to provide culverts of a different type than those shown on this sheet, it shall be the Contractor's responsibility to make the necessary adjustments to the dimensions and quantities shown.

SPECIAL NOTE:

This sheet is a supplement to the Box Culvert standards. It is to be filled out by the culvert specifier and provides dimensions for the construction of the Box Culvert Wingwalls and Safety End Treatments.

An Excel 97 spreadsheet to assist in completing this table can be downloaded from the Bridge Standards (English) web page on the TxDOT web site. The completed sheet shall be signed, sealed, and dated by a licensed Professional Engineer.

STATE OF TEXAS
NICHOLAS VON SPENCER
93702
LICENSED PROFESSIONAL ENGINEER

Nicholas V. Spencer, P.E. 4-7-11
Signature of Registrant & Date

Texas Department of Transportation
Bridge Division

BOX CULVERT SUPPLEMENT
WINGS AND END TREATMENTS

BCS

FILE: bcsstdel.dgn	DN: TxDOT	CK: TxDOT	DW: TxDOT	CK: GAF
©TxDOT February 2010	DISTRICT	STATE PROJECT NO.		SHEET
REVISIONS	18	(SEE TITLE SHEET)		373

COUNTY	CONTROL	SECT	JOB	HIGHWAY
COLLIN	0091	04	055	SH 289

LEVELS 01 COMMENTS:

R-201104-01

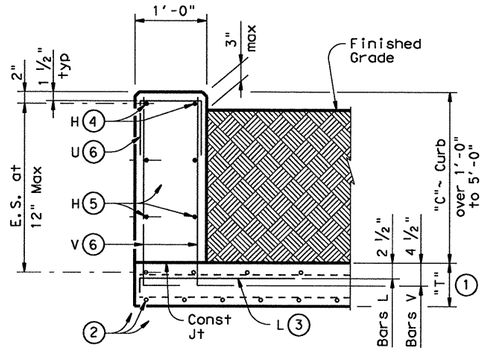

TYPICAL SECTION

Used for Curbs over 1'-0" to 5'-0"

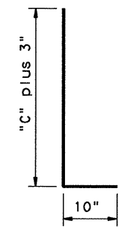

BARS V (#5) (6)

Spaced at 12" max

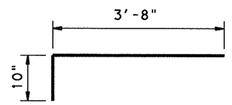

BARS L (#5) (3)

Spaced at 12" max

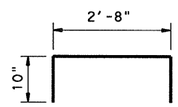

OPTIONAL BARS L (#5) (3)(7)

Spaced at 12" max

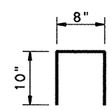

BARS U (#4) (6)

Spaced at 12" max

(1) "T" is equal to the culvert top slab thickness. For Precast Boxes with slabs less than 7", see SCP-MD Standard for additional details.

(2) Normal culvert slab bars adjusted as necessary to clear obstructions.

(3) Place bars L as shown. Tilt hook as necessary to maintain cover.

(4) Place normal culvert curb bars H (#4) as shown. Adjust as necessary to clear obstructions.

(5) Additional bars H (#4) as required to maintain 12" max spa.

(6) Replace normal culvert curb bars K with one bar U and two bars V as shown spaced at 12" max. Adjust length of bars V as necessary to maintain clear cover.

(7) Optional bars L are to be used only for precast box culverts with 3'-0" closure pour.

(8) Quantities shown are for contractor's information only. Quantities are per linear foot of curb length. The values for each section type in table can be interpolated for intermediate values of curb height, "C". Quantity includes bars K (when applicable).

TABLE OF ESTIMATED CURB QUANTITIES (8)

Curb Height "C"	Conc (CY/LF)	Reinf Steel (Lb/LF)
1'-0"	0.037	8.9
1'-6"	0.056	14.3
2'-0"	0.074	15.4
2'-6"	0.093	17.7
3'-0"	0.111	18.8
3'-6"	0.130	21.2
4'-0"	0.148	22.2
4'-6"	0.167	24.6
5'-0"	0.185	25.6

GENERAL NOTES:

Designed according to current AASHTO LRFD Specifications.

These extended curb details have sufficient strength to allow for future retrofit of Type T6 railing. These details are suitable for use with PR1, PR2 and PR3 type rails. These details are not suitable for the mounting of other rail types. For new construction using T6 railing, use the T6-CM standards.

All reinforcing shall be Grade 60. Adjust reinforcing as necessary to provide 1 1/4" cover.

All concrete for curbs shall be Class "C" with a minimum compressive strength of 3600 psi.

This Curb shall be considered as part of the Box Culvert for payment.

For vehicle safety, the top of the curb shall project no more than 3" above the finished grade.

DISCLAIMER:
The use of this standard is governed by the "Texas Engineering Practice Act". No warranty of any kind is made by TxDOT for any purpose whatsoever. TxDOT assumes no responsibility for the conversion of this standard to other formats or for incorrect results or damages resulting from its use.

LEVELS DL PATH:

Texas Department of Transportation
Bridge Division

EXTENDED CURB DETAILS

FOR BOX CULVERTS WITH CURBS OVER 1'-0" TO 5'-0" TALL

ECD

FILE: ecdstde1.dgn	DN: GAF	CK:	DW: TxDOT	CK: GAF
© TxDOT February 2010	DISTRICT	STATE PROJECT NO.		SHEET
REVISIONS	18	(SEE TITLE SHEET)		374
	COUNTY		CONTROL SECT JOB	HIGHWAY
	COLLIN		0091 04 055	SH 289

DIAGRAM SHOWS INITIAL PHASE

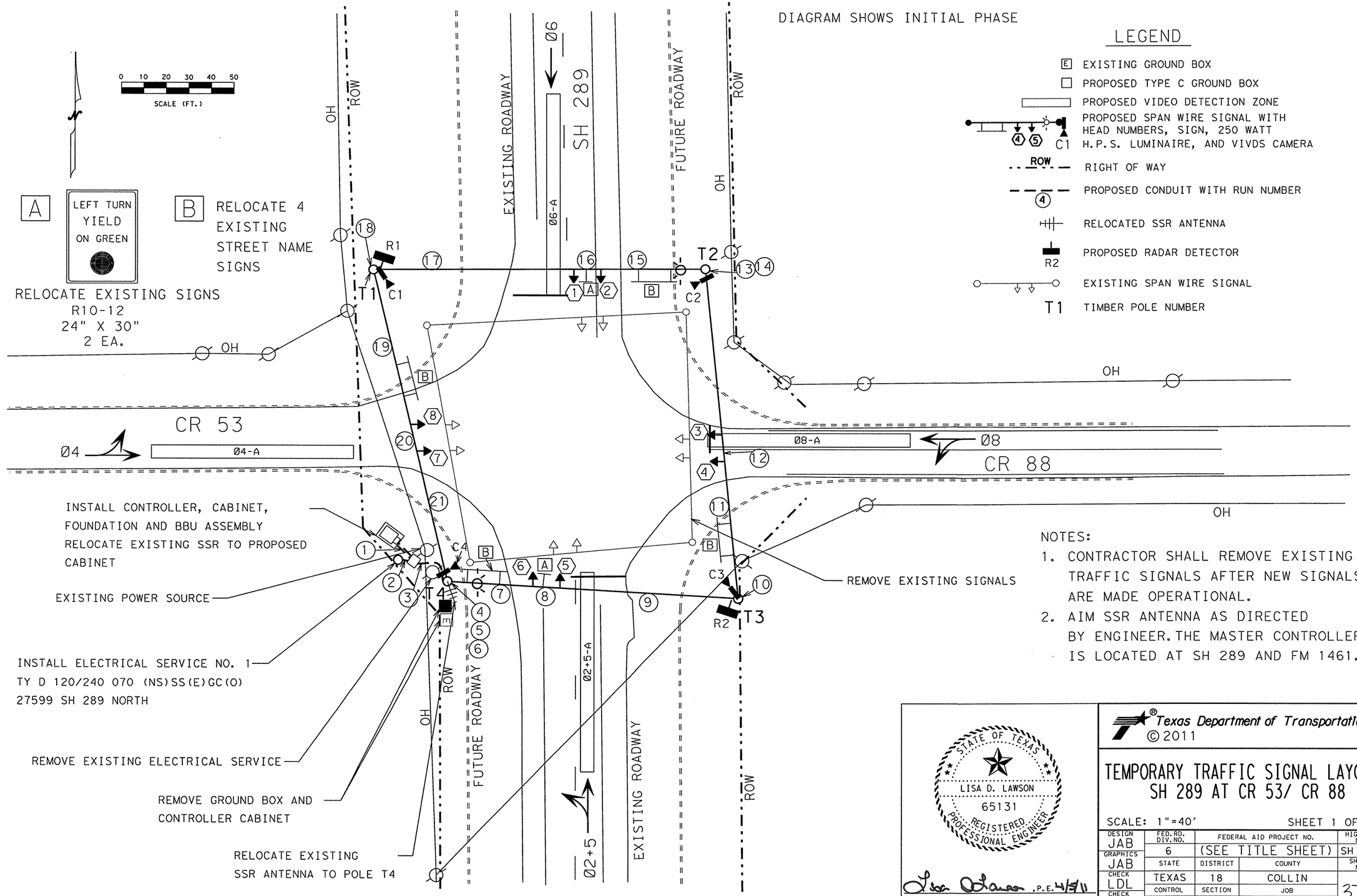

LEGEND

- E — EXISTING GROUND BOX
- PROPOSED TYPE C GROUND BOX
- PROPOSED VIDEO DETECTION ZONE
- PROPOSED SPAN WIRE SIGNAL WITH HEAD NUMBERS, SIGN, 250 WATT H.P.S. LUMINAIRE, AND VIVDS CAMERA
- ROW — RIGHT OF WAY
- PROPOSED CONDUIT WITH RUN NUMBER
- RELOCATED SSR ANTENNA
- R2 — PROPOSED RADAR DETECTOR
- EXISTING SPAN WIRE SIGNAL
- T1 — TIMBER POLE NUMBER

NOTES:

1. CONTRACTOR SHALL REMOVE EXISTING TRAFFIC SIGNALS AFTER NEW SIGNALS ARE MADE OPERATIONAL.
2. AIM SSR ANTENNA AS DIRECTED BY ENGINEER. THE MASTER CONTROLLER IS LOCATED AT SH 289 AND FM 1461.

STATE OF TEXAS
LISA D. LAWSON
65131
REGISTERED PROFESSIONAL ENGINEER

Signature, P.E. Date 4/5/11

Texas Department of Transportation
© 2011

TEMPORARY TRAFFIC SIGNAL LAYOUT
SH 289 AT CR 53/ CR 88

SCALE: 1"=40' SHEET 1 OF 3

DESIGN	FED. RD. DIV. NO.	FEDERAL AID PROJECT NO.		HIGHWAY NO.
JAB	6	(SEE TITLE SHEET)		SH 289
GRAPHICS JAB	STATE	DISTRICT	COUNTY	SHEET NO.
CHECK LDL	TEXAS	18	COLLIN	375
CHECK APM	CONTROL	SECTION	JOB	
	0091	04	055	

FILE: U:\US 289, 0091-04-055\CR 53-88 temporary.dgn

R-201104-01

CONDUIT RUNS

RUN #	CONDUIT TYPE (LF) 2" TRENCH PVC	CONDUIT TYPE (LF) 4" TRENCH PVC	CONDUIT TYPE (LF) 2" EXPOSED RM	CONDUIT TYPE (LF) 4" EXPOSED RM	OVERHEAD (LF)	WIRE SIZE AND TYPE (EA) CONDUCTORS NO. 6 XHHW	CONDUCTORS NO. 6 BARE	CONDUCTORS NO. 8 XHHW	CONDUCTORS NO. 8 BARE	SIGNAL CABLE 10 CNDR TY-A 14 AWG	SIGNAL CABLE SSR COAX	SIGNAL CABLE △△ VIVDS CABLE	SIGNAL CABLE @@ RADAR CABLE	TOTAL LENGTH OF RUNS (LF)	RUN #
1		2@16				2	2			4	1	4	2	16	1
2	7					2	1	4						7	2
3		20						4	1	4	1	4	2	20	3
4				19				4	1	4	1	4	2	19	4
5			7					2	1					7	5
6			10						1		1	1		10	6
7					38					2**		1	1	38	7
8					12					2		1	1	12	8
9					80					1		1	1	80	9
10			10						1			1	1	10	10
11					62					1				62	11
12					12					1				12	12
13			7					2	1					7	13
14			10						1			1		10	14
15					47			2				1		47	15
16					12			2		1		1		12	16
17					89			2		1*		1		89	17
18			10						1			1	1	10	18
19					72			2		1		2	1	72	19
20					12			2		2		2	1	12	20
21					60			2		2***		2	1	60	21
22															
SLACK										1				44	SLACK
TOTAL	7	52	54	19		46	39	796	93	835	65	826	404	TOTAL	

* SIGNAL CABLE 1, ADD 9' SLACK FOR MOVING SIGNAL HEADS

** SIGNAL CABLE 3, ADD 19' SLACK FOR MOVING SIGNAL HEADS

*** SIGNAL CABLE 4, ADD 16' SLACK FOR MOVING SIGNAL HEADS

△△ VIVDS COAXIAL CABLE INCLUDES 3-CONDUCTOR POWER CABLE

@@ FOR CONTRACTOR'S INFORMATION ONLY SUBSIDIARY TO 681

VIVDS AND RADAR DETECTION DETAILS

CAMERA/ RADAR	MOUNTING LOCATION	MOUNTING HEIGHT	ZONE LOCATION	ZONE
C1	TIMBER POLE T1	30'	STOPBAR	Ø2+5-A
C2	TIMBER POLE T2	30'	STOPBAR	Ø4-A
C3	TIMBER POLE T3	30'	STOPBAR	Ø6-A
C4	TIMBER POLE T4	30'	STOPBAR	Ø8-A
R1	TIMBER POLE T1	30'	SETBACKS	PHASE Ø6 FROM STOP BAR 100' TO 500'
R2	TIMBER POLE T3	30'	SETBACKS	PHASE Ø2 FROM STOP BAR 100' TO 500'

GROUND BOX SUMMARY

TYPE	DESCRIPTION	UNIT	QTY.
C	NO. 162911 W/ APRON	EA	1

TIMBER POLE HEIGHTS

POLE NUMBER	HEIGHT (LF)
T1, T2, T3, AND T4	40

POLE LOCATION AND GROUND ANCHOR LAYOUT

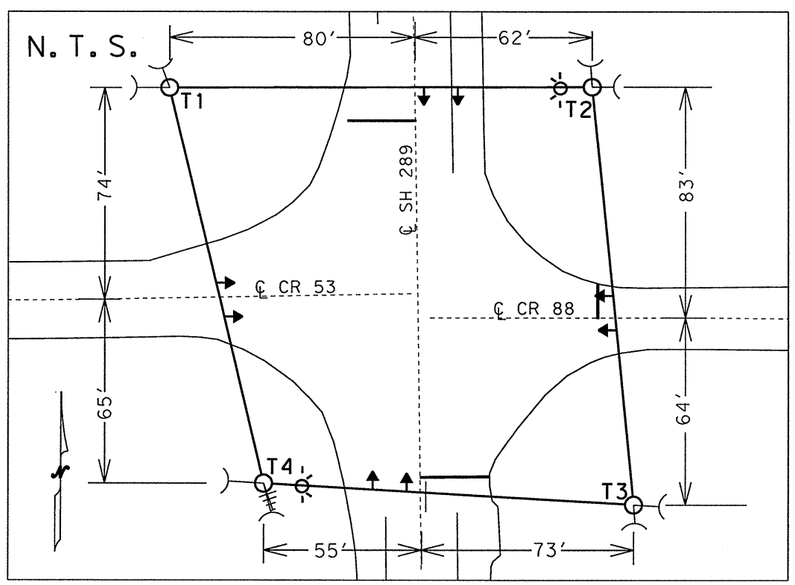

CABLE TERMINATION CHART

CNDR. COLOR	CABLE 1 FROM SPAN T1-T2 TO CNTR. 10 CNDR.	CABLE 2 FROM SPAN T2-T3 TO CNTR. 10 CNDR.	CABLE 3 FROM SPAN T3-T4 TO CNTR. 10 CNDR.	CABLE 4 FROM SPAN T4-T1 TO CNTR. 10 CNDR.
BLACK	SPARE	SPARE	SPARE	SPARE
WHITE	S. COMMON	S. COMMON	S. COMMON	S. COMMON
RED	SH 1,2 R	SH 3,4 R	SH 5,6 R	SH 7,8 R
GREEN	SH 1,2 G	SH 3,4 G/~~6~~	SH 5,6 G	SH 7,8 G/~~6~~
ORANGE	SH 1,2 Y	SH 3,4 Y	SH 5,6 Y	SH 7,8 Y
BLUE	SH 1 ~~6~~	SPARE	SPARE	SPARE
WHITE/ BLACK	SH 1 ~~Y~~	SPARE	SPARE	SPARE
RED/ BLACK	SPARE	SPARE	SPARE	SPARE
GRN/ BLACK	SPARE	SPARE	SPARE	SPARE
ORANGE/ BLACK	SPARE	SPARE	SPARE	SPARE

STATE OF TEXAS
LISA D. LAWSON
65131
REGISTERED PROFESSIONAL ENGINEER

Lisa D Lawson, P.E. 4/3/11
Signature Date

Texas Department of Transportation
© 2011

TEMPORARY TRAFFIC SIGNAL LAYOUT SH 289 AT CR 53/ CR 88

SHEET 2 OF 3

DESIGN	FED. RD. DIV. NO.	FEDERAL AID PROJECT NO.		HIGHWAY NO.
JAB	6	(SEE TITLE SHEET)		SH 289
GRAPHICS JAB	STATE	DISTRICT	COUNTY	SHEET NO.
CHECK LDL	TEXAS	18	COLLIN	376
CHECK APM	CONTROL	SECTION	JOB	
	0091	04	055	

FILE: U:\US 289, 0091-04-055\CR 53-88 temporary charts.dgn

SIGNAL HEAD PLACEMENT (FEET)

SPAN	NO. OF HEADS	INITIAL				PHASE 1-A				PHASE 2-A			
		A	B	C	D	A	B	C	D	A	B	C	D
T1 TO T2	2	89.0	12.0	47.0	148.0	98.0	12.0	38.0	148.0	56.0	12.0	80.0	148.0
T2 TO T3	2	75.0	12.0	62.0	149.0	85.0	12.0	52.0	149.0	85.0	12.0	52.0	149.0
T3 TO T4	2	80.0	12.0	38.0	130.0	61.0	12.0	57.0	130.0	108.0	12.0	10.0	130.0
T4 TO T1	2	60.0	12.0	72.0	144.0	60.0	12.0	72.0	144.0	53.0	12.0	79.0	144.0

SPAN	PHASE 1-B				PHASE 2-B			
	A	B	C	D	A	B	C	D
T1 TO T2	98.0	12.0	38.0	148.0	56.0	12.0	80.0	148.0
T2 TO T3	85.0	12.0	52.0	149.0	76.0	12.0	61.0	149.0
T3 TO T4	61.0	12.0	57.0	130.0	108.0	12.0	10.0	130.0
T4 TO T1	76.0	12.0	56.0	144.0	74.0	12.0	58.0	144.0

SPAN	PHASE 1-C			
	A	B	C	D
T1 TO T2	98.0	12.0	38.0	148.0
T2 TO T3	85.0	12.0	52.0	149.0
T3 TO T4	61.0	12.0	57.0	130.0
T4 TO T1	76.0	12.0	56.0	144.0

NOTE: FOR CONTRACTOR'S INFORMATION ONLY. THE CONTRACTOR IS RESPONSIBLE FOR SHIFTING SIGNAL HEADS TO CORRESPOND TO EACH PHASE OF CONSTRUCTION.

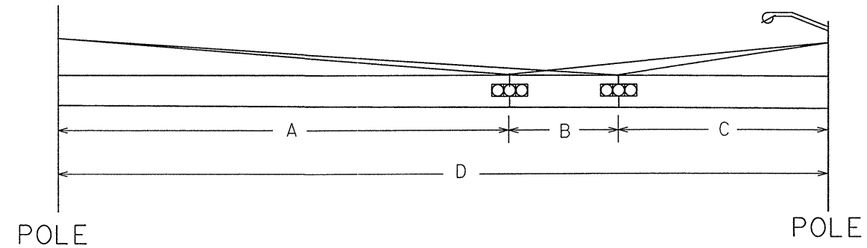

SIGNAL HEAD PLACEMENT DIAGRAM

SIGNAL HEADS

SIGNAL HEAD NUMBER	SIGNAL HEAD TYPE	12" SIGNAL INDICATION							
		BACK PLATE			VEH SIG SEC WITH LED LAMP				
		3 SEC	4 SEC	5 SEC	G	⊖G	Y	⊖Y	R
		EA.	EA.	EA.	EA.	EA.	EA.	EA.	EA.
1	H5LT			1	1	1	1	1	1
2	H3	1			1		1		1
3	H4LT		1		1	1	1		1
4	H3	1			1		1		1
5	H3	1			1		1		1
6	H3	1			1		1		1
7	H4LT		1		1	1	1		1
8	H3	1			1		1		1
TOTAL		5	2	1	8	3	8	1	8

H3 H5LT H4LT

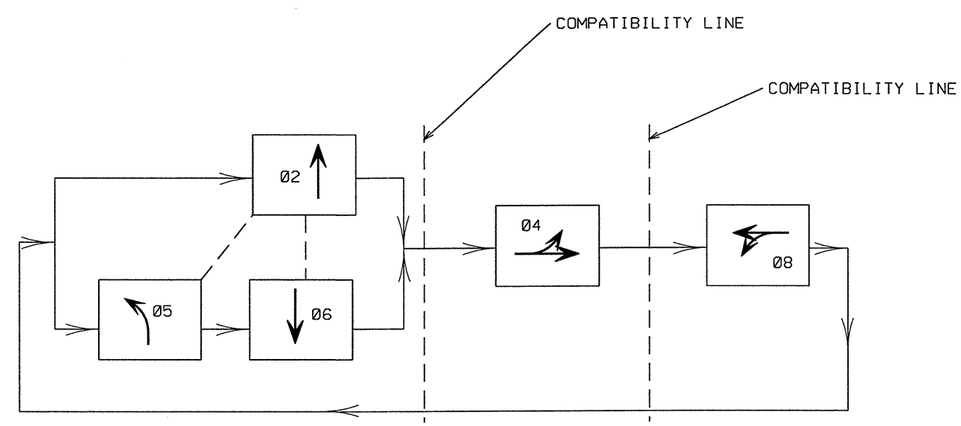

PHASE SEQUENCE

Ø5 IS PROTECTED/PERMITTED LEFT TURN PHASE

ELECTRICAL SERVICE NO.	ELECTRICAL SERVICE DESCRIPTION (SEE ED (4))	SERVICE CONDUIT SIZE (RMC)	SERVICE CONDUCTORS NO. /SIZE	SAFETY SWITCH AMPS	MAIN DISCONNECT CKT. BRK. POLE/AMP	TWO-POLE CONTACTOR AMPS	PANEL B.D./ LOADCENTER AMP RATING (MIN)	CIRCUIT NO.	BRANCH CKT. BRK. POLE/AMPS	KVA LOAD
1	TY D (120/240)070(NS)SS(E)GC(O)	1¼"	3/#4	N/A	2P/70	30	100	PERM T.S. LIGHTING	1P/50 2P/20	<7.1

STATE OF TEXAS
LISA D. LAWSON
65131
REGISTERED PROFESSIONAL ENGINEER

Lisa D Lawson, P.E. 4/8/11
Signature Date

Texas Department of Transportation
© 2011

TEMPORARY TRAFFIC SIGNAL LAYOUT SH 289 AT CR 53/ CR 88

SHEET 3 OF 3

DESIGN	FED. RD. DIV. NO.	FEDERAL AID PROJECT NO.		HIGHWAY NO.
JAB	6	(SEE TITLE SHEET)		SH 289
GRAPHICS	STATE	DISTRICT	COUNTY	SHEET NO.
JAB	TEXAS	18	COLLIN	377
CHECK	CONTROL	SECTION	JOB	
LDL / APM	0091	04	055	

FILE: U:\US 289, 0091-04-055\CR 53-88 temporary charts.dgn

B RELOCATE 4 EXISTING STREET NAME SIGNS

A LEFT TURN YIELD ON GREEN

RELOCATE EXISTING SIGNS
R10-12
24" X 30"
2 EA.

EXISTING POWER SOURCE
2221-603-2068

REMOVE ELECTRICAL SERVICE AND GROUND BOX

INSTALL ELECTRICAL SERVICE NO. 2
TY D 120/240 070 (NS)SS(E)GC(O)
100 NORTH PRESTON RD.

INSTALL ROADWAY ILLUM POLE. LUMINAIRE ARM AND FIXTURE TO BE DELIVERED TO TXDOT SIGNAL SHOP. RELOCATE EXISTING SSR ANTENNA TO POLE P1.

INSTALL CONTROLLER, CABINET, FOUNDATION AND BBU ASSEMBLY RELOCATE EXISTING SSR TO PROPOSED CABINET

REMOVE EXISTING SIGNALS, POLE MOUNTED CONTROLLER, AND BBU

DIAGRAM SHOWS INITIAL PHASE

0 10 20 30 40 50
SCALE (FT.)

EXISTING ROADWAY
FUTURE ROADWAY
Ø6
Ø1
Ø6-A
Ø1-A
T1
T2
T3
T4
P1
R1
R2
C1
C2
C3
C4
C5
C6
ROW
OH
FM 455
Ø8
Ø8-A
Ø8-B
Ø8-C
350' FROM STOP LINE
220' FROM STOP LINE
PECAN ST
Ø4
Ø4-A
Ø4-B
Ø4-C
SH 289
Ø5
Ø2
Ø5-A
Ø2-A

NOTES:

1. CONTRACTOR SHALL REMOVE EXISTING TRAFFIC SIGNAL AFTER NEW SIGNALS ARE MADE OPERATIONAL.
2. AIM SSR ANTENNA AS DIRECTED BY ENGINEER. THE MASTER CONTROLLER IS LOCATED AT SH 289 AND FM 1461.
3. SIGNAL HEADS 1, 6, AND 9 TO BE BAGGED UNTIL CONSTRUCTION PHASE 2-A.

LEGEND

- E EXISTING GROUND BOX
- PROPOSED TYPE C GROUND BOX
- PROPOSED VIDEO DETECTION ZONE
- 4 5 C1 PROPOSED SPAN WIRE SIGNAL WITH HEAD NUMBERS, SIGN, 250 WATT H.P.S. LUMINAIRE, AND VIVDS CAMERA
- ROW RIGHT OF WAY
- 4 PROPOSED CONDUIT WITH RUN NUMBER
- RELOCATED SSR ANTENNA
- R2 PROPOSED RADAR DETECTOR
- EXISTING SPAN WIRE SIGNAL
- T1 TIMBER POLE NUMBER

STATE OF TEXAS
LISA D. LAWSON
65131
REGISTERED PROFESSIONAL ENGINEER

Signature, P.E. 4/5/11 Date

Texas Department of Transportation
© 2011

TEMPORARY TRAFFIC SIGNAL LAYOUT SH 289 AT FM 455/ PECAN ST

SCALE: 1"=40' SHEET 1 OF 3

DESIGN	FED. RD. DIV. NO.	FEDERAL AID PROJECT NO.		HIGHWAY NO.
JAB	6	(SEE TITLE SHEET)		SH 289
GRAPHICS JAB	STATE	DISTRICT	COUNTY	SHEET NO.
CHECK LDL	TEXAS	18	COLLIN	378
CHECK	CONTROL	SECTION	JOB	
APM	0091	04	055	

FILE: U:\US 289, 0091-04-055\FM 455 temporary.dgn

R-201104-01

CONDUIT RUNS

RUN #	CONDUIT TYPE (LF) 2" TRENCH PVC	CONDUIT TYPE (LF) 4" TRENCH PVC	CONDUIT TYPE (LF) 2" EXPOSED RM	CONDUIT TYPE (LF) 4" EXPOSED RM	OVERHEAD (LF)	WIRE SIZE AND TYPE (EA) CONDUCTORS NO. 6 XHHW	CONDUCTORS NO. 6 BARE	CONDUCTORS NO. 8 XHHW	CONDUCTORS NO. 8 BARE	SIGNAL CABLE 12 CNDR TY-A 14 AWG	SIGNAL CABLE SSR COAX	SIGNAL CABLE △△ VIVDS CABLE	SIGNAL CABLE @@ RADAR CABLE	TOTAL LENGTH OF RUNS (LF)	RUN #
1		3@21				2	3			4	1	6	2	21	1
2	15					2	1	4						15	2
3	8								1		1			8	3
4		20						4	1	4		6	2	20	4
5				19				4	1	4		6	2	19	5
6			10						1			1	1	10	6
7					83			2		2 *		3	1	83	7
8					15			2		2		3	1	15	8
9					12			2		2		3	1	12	9
10					65			2		1		3	1	65	10
11			7					4	1					7	11
12			10						1			2		10	12
13					95			2		1 **		1	1	95	13
14					12			2		1		1	1	12	14
15					51			2				1	1	51	15
16			7					2	1					7	16
17			10						1			1	1	10	17
18					8					1				8	18
19					12					1				12	19
20					72					1 ***				72	20
21			7					2	1					7	21
22			10						1			2		10	22
23					58			2		1		2		58	23
24					12			2		2		2		12	24
25					12			2		2		2		12	25
26					78			2		2****		2		78	26
SLACK										1				47	SLACK
TOTAL	23	83	61	19		72	78	1258	108	1033	29	1423	473	TOTAL	

* SIGNAL CABLE 1, ADD 11′ SLACK FOR MOVING SIGNAL HEADS
** SIGNAL CABLE 2, ADD 7′ SLACK FOR MOVING SIGNAL HEADS
*** SIGNAL CABLE 3, ADD 15′ SLACK FOR MOVING SIGNAL HEADS
**** SIGNAL CABLE 4, ADD 14′ SLACK FOR MOVING SIGNAL HEADS

△△VIVDS COAXIAL CABLE INCLUDES 3-CONDUCTOR POWER CABLE

@@FOR CONTRACTOR'S INFORMATION ONLY SUBSIDIARY TO 681

VIVDS AND RADAR DETECTION DETAILS

CAMERA/ RADAR	MOUNTING LOCATION	MOUNTING HEIGHT	ZONE LOCATION	ZONE	SETBACK DISTANCE
C1	TIMBER POLE T1	30′	STOPBAR	02-A	N/A
				05-A	
C2	TIMBER POLE T2	30′	STOPBAR	04-A	N/A
C3	TIMBER POLE T2 LUM ARM	36′	SETBACKS	08-B	220′
				08-C	350′
C4	TIMBER POLE T3	30′	STOPBAR	06-A	N/A
				01-A	
C5	TIMBER POLE T4	30′	STOPBAR	08-A	N/A
C6	TIMBER POLE T4 LUM ARM	36′	SETBACKS	04-B	220′
				04-C	350′
R1	TIMBER POLE T1	30′	SETBACKS	PHASE 06 FROM STOP BAR 100′ TO 500′	-
R2	TIMBER POLE T3	30′	SETBACKS	PHASE 02 FROM STOP BAR 100′ TO 500′	-

POLE LOCATION AND GROUND ANCHOR LAYOUT

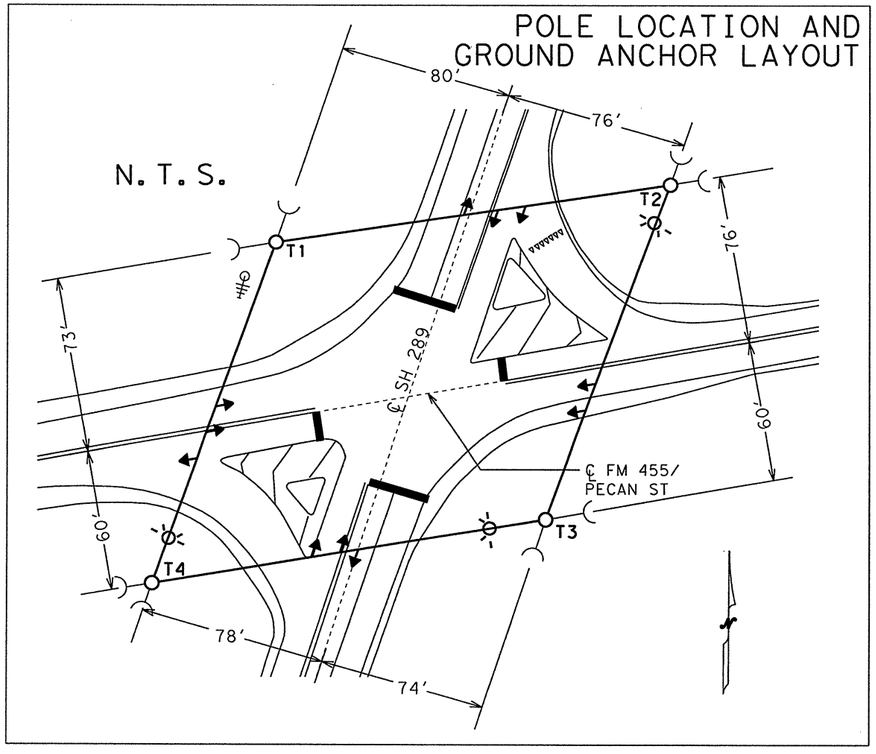

ILLUM POLE DETAIL

POLE NUMBER	DRILLED SHAFT LENGTH 30" DIA RDWY ILL ITEM 681 (LF)	WIRE INSIDE POLE (SUB TO 681) SSR COAX CABLE (LF)
P1	10.0	50.0
TOTAL	10.0	50.0

CABLE TERMINATION CHART

CNDR. COLOR	CABLE 1 FROM SPAN T1-T2 TO CNTR. 12 CNDR.	CABLE 2 FROM SPAN T2-T3 TO CNTR. 12 CNDR.	CABLE 3 FROM SPAN T3-T4 TO CNTR. 12 CNDR.	CABLE 4 FROM SPAN T4-T1 TO CNTR. 12 CNDR.
BLACK	SPARE	SPARE	SPARE	SPARE
WHITE	S. COMMON	S. COMMON	S. COMMON	S. COMMON
RED	SH 2,3 R	SH 4,5 R	SH 7,8 R	SH 10,11 R
GREEN	SH 2,3 G	SH 4,5 G/⊖	SH 7,8 G	SH 10,11 G/⊖
ORANGE	SH 2,3 Y	SH 4,5 Y	SH 7,8 Y	SH 10,11 Y
BLUE	SH 2 ⊖	SPARE	SH 7 ⊖	SPARE
WHITE/ BLACK	SH 2 ⊖	SPARE	SH 7 ⊖	SPARE
RED/ BLACK	SH 1 R	SPARE	SH 6 R	SH 9 R
GRN/ BLACK	SH 1 G	SPARE	SH 6 G	SH 9 G
ORANGE/ BLACK	SH 1 Y	SPARE	SH 6 Y	SH 9 Y
BLUE/ BLACK	SPARE	SPARE	SPARE	SPARE
BLACK/ WHITE	SPARE	SPARE	SPARE	SPARE

TIMBER POLE HEIGHTS

POLE NUMBER	HEIGHT (LF)
T1, T2, T3, AND T4	40

GROUND BOX SUMMARY

TYPE	DESCRIPTION	UNIT	QTY.
C	NO. 162911 W/ APRON	EA	1

STATE OF TEXAS
LISA D. LAWSON
65131
REGISTERED PROFESSIONAL ENGINEER

Lisa D. Lawson, P.E. 4/5/11
Signature Date

Texas Department of Transportation
© 2011

TEMPORARY TRAFFIC SIGNAL LAYOUT SH 289 AT FM 455/ PECAN ST

SHEET 2 OF 3

DESIGN	FED. RD. DIV. NO.	FEDERAL AID PROJECT NO.		HIGHWAY NO.
JAB	6	(SEE TITLE SHEET)		SH 289
GRAPHICS JAB	STATE	DISTRICT	COUNTY	SHEET NO.
CHECK LDL	TEXAS	18	COLLIN	379
	CONTROL	SECTION	JOB	
CHECK APM	0091	04	055	

FILE: U:\US 289, 0091-04-055\FM 455 temporary charts.dgn

SIGNAL HEAD PLACEMENT (FEET)

SPAN	NO. OF HEADS	INITIAL A	INITIAL B	INITIAL C	INITIAL D	INITIAL E	PHASE 1-A A	PHASE 1-A B	PHASE 1-A C	PHASE 1-A D	PHASE 1-A E	PHASE 2-A A	PHASE 2-A B	PHASE 2-A C	PHASE 2-A D	PHASE 2-A E
T1 TO T2	3	83.0	15.0	12.0	65.0	175.0	94.0	15.0	12.0	54.0	175.0	44.0	15.0	12.0	104.0	175.0
T2 TO T3	2	-	95.0	12.0	51.0	158.0	-	95.0	12.0	51.0	158.0	-	102.0	12.0	44.0	158.0
T3 TO T4	3	83.0	8.0	12.0	72.0	175.0	68.0	8.0	12.0	87.0	175.0	105.0	8.0	12.0	50.0	175.0
T4 TO T1	3	58.0	12.0	12.0	78.0	160.0	44.0	12.0	12.0	92.0	160.0	58.0	12.0	12.0	78.0	160.0

NOTE: FOR CONTRACTOR'S INFORMATION ONLY. THE CONTRACTOR IS RESPONSIBLE FOR SHIFTING SIGNAL HEADS TO CORRESPOND TO EACH PHASE OF CONSTRUCTION.

SPAN	PHASE 1-B A	PHASE 1-B B	PHASE 1-B C	PHASE 1-B D	PHASE 1-B E	PHASE 2-B A	PHASE 2-B B	PHASE 2-B C	PHASE 2-B D	PHASE 2-B E
T1 TO T2	94.0	15.0	12.0	54.0	175.0	44.0	15.0	12.0	104.0	175.0
T2 TO T3	-	77.0	12.0	69.0	158.0	-	72.0	12.0	74.0	158.0
T3 TO T4	68.0	8.0	12.0	87.0	175.0	105.0	8.0	12.0	50.0	175.0
T4 TO T1	78.0	12.0	12.0	58.0	160.0	79.0	12.0	12.0	57.0	160.0

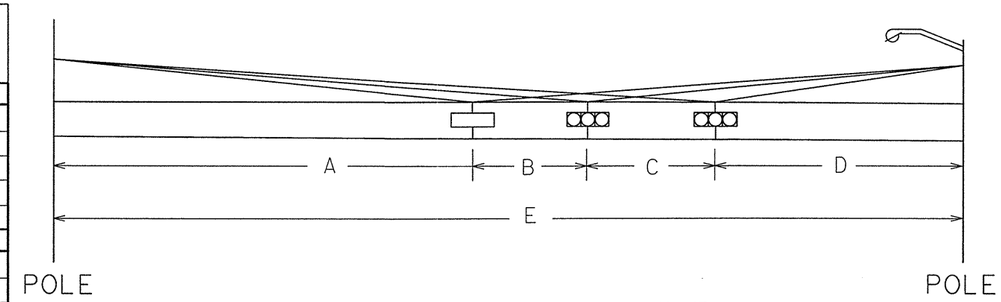

SIGNAL HEAD PLACEMENT DIAGRAM

SIGNAL HEADS

SIGNAL HEAD NUMBER	SIGNAL HEAD TYPE	12" SIGNAL INDICATION: BACK PLATE 3 SEC EA.	BACK PLATE 4 SEC EA.	BACK PLATE 5 SEC EA.	VEH SIG SEC WITH LED LAMP G EA.	G (arrow) EA.	Y EA.	Y (arrow) EA.	R EA.
1	H3**	1			1		1		1
2	H5LT			1	1	1	1	1	1
3	H3	1			1		1		1
4	H4LT		1		1	1	1		1
5	H3	1			1		1		1
6	H3**	1			1		1		1
7	H5LT			1	1	1	1	1	1
8	H3	1			1		1		1
9	H3**	1			1		1		1
10	H4LT		1		1	1	1		1
11	H3	1			1		1		1
TOTAL		7	2	2	11	4	11	2	11

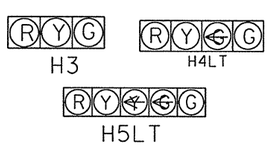

** SIGNAL HEADS TO BE BAGGED DURING INITIAL PHASE AND PHASE 1 (A & B)

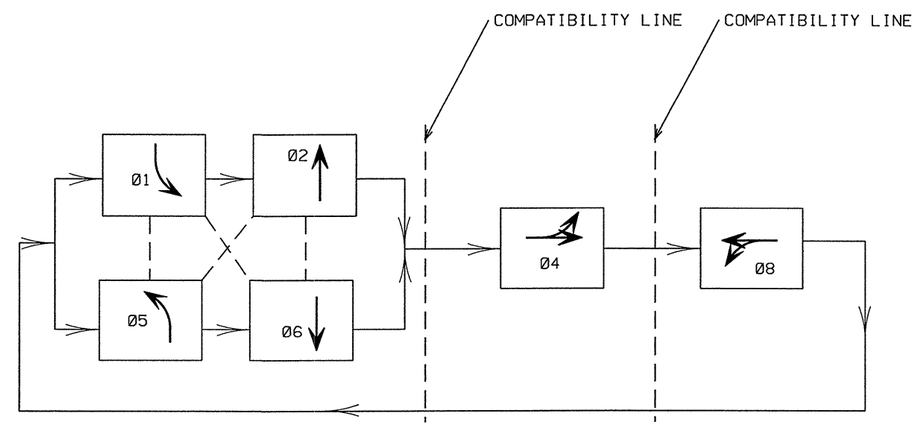

PHASE SEQUENCE

Ø1 AND Ø5 ARE PROTECTED/ PERMITTED LEFT TURN PHASES

ELECTRICAL SERVICE NO.	ELECTRICAL SERVICE DESCRIPTION (SEE ED (4))	SERVICE CONDUIT SIZE (RMC)	SERVICE CONDUCTORS NO. /SIZE	SAFETY SWITCH AMPS	MAIN DISCONNECT CKT. BRK. POLE/AMP	TWO-POLE CONTACTOR AMPS	PANEL B.D./ LOADCENTER AMP RATING (MIN)	CIRCUIT NO.	BRANCH CKT. BRK. POLE/AMPS	KVA LOAD
2	TY D (120/240)070(NS)SS(E)GC(O)	1¼"	3/#4	N/A	2P/70	30	100	PERM T.S. LIGHTING	1P/50 2P/20	<7.1

STATE OF TEXAS
LISA D. LAWSON
65131
REGISTERED PROFESSIONAL ENGINEER

Signature ,P.E. 4/5/11 Date

Texas Department of Transportation
© 2011

TEMPORARY TRAFFIC SIGNAL LAYOUT SH 289 AT FM 455/ PECAN ST

SHEET 3 OF 3

DESIGN	FED. RD. DIV. NO.	FEDERAL AID PROJECT NO.		HIGHWAY NO.
JAB	6	(SEE TITLE SHEET)		SH 289
GRAPHICS JAB	STATE	DISTRICT	COUNTY	SHEET NO.
CHECK LDL	TEXAS	18	COLLIN	380
CHECK	CONTROL	SECTION	JOB	
APM	0091	04	055	

FILE: U:\US 289, 0091-04-055\FM 455 temporary charts.dgn

R-201104-01

NOTES:
1. CONTRACTOR SHALL REMOVE TEMPORARY TRAFFIC SIGNALS AFTER NEW SIGNALS ARE MADE OPERATIONAL.
2. EXISTING VIVDS CAMERAS AND RADAR DETECTORS SHALL BE RELOCATED TO NEW SIGNALS.
3. AIM SSR ANTENNA AS DIRECTED BY THE ENGINEER. THE MASTER CONTROLLER IS LOCATED AT SH 289 AND FM 1461.

LEGEND

- PROPOSED TYPE A GROUND BOX
- PROPOSED TYPE C GROUND BOX
- EXISTING GROUND BOX
- PROPOSED VIDEO DETECTION ZONE
- PROPOSED MAST ARM SIGNAL WITH HEAD NUMBERS AND 250 WATT H.P.S. LUMINAIRE
- PROPOSED CONDUIT WITH RUN NUMBER
- ROW — RIGHT OF WAY
- SSR ANTENNA
- C2 — RELOCATED VIVDS CAMERA
- R1 — RELOCATED RADAR DETECTOR
- EXISTING TEMPORARY SIGNAL

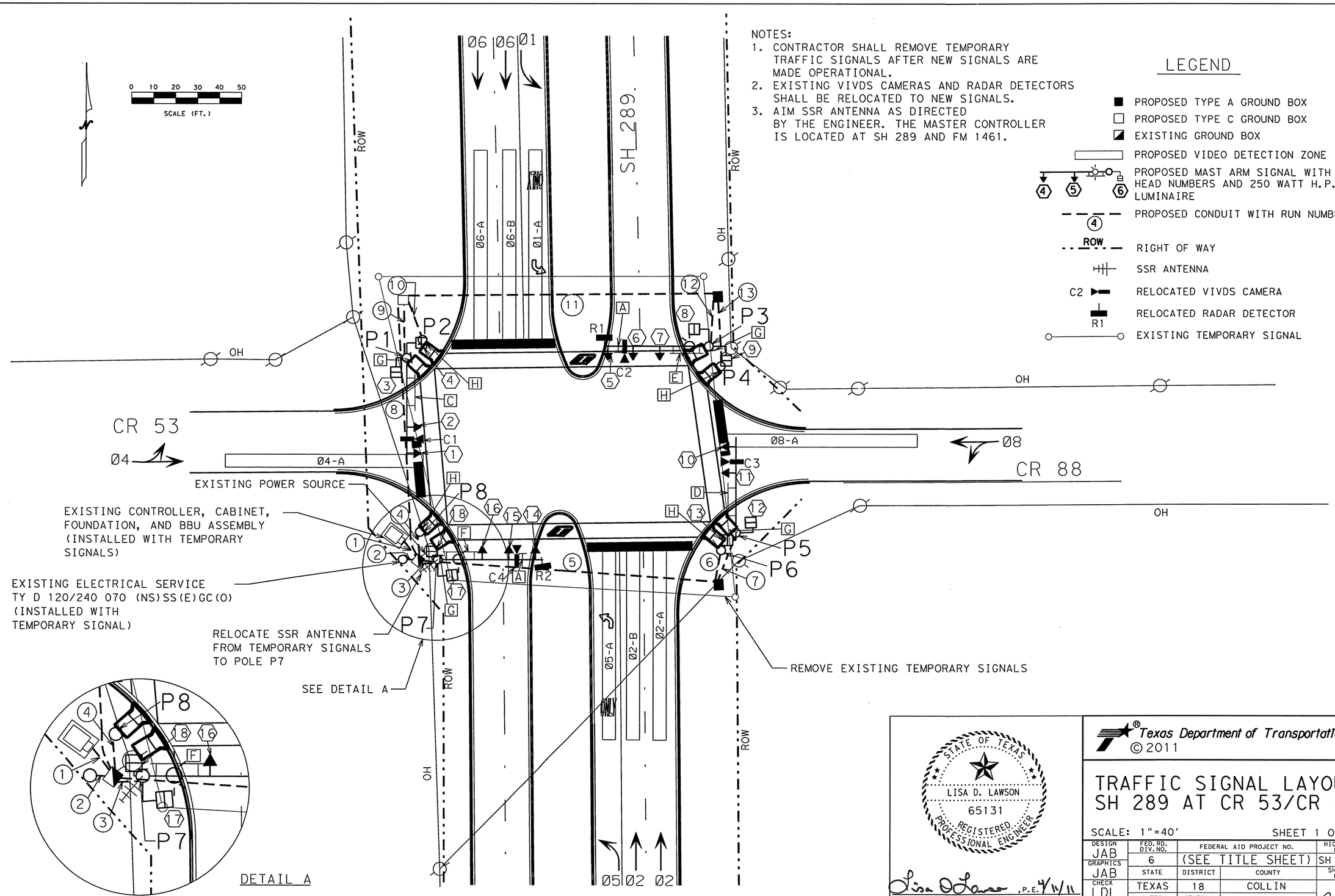

STATE OF TEXAS
LISA D. LAWSON
65131
REGISTERED PROFESSIONAL ENGINEER

Lisa D. Lawson, P.E. 4/11/11
Signature Date

Texas Department of Transportation
© 2011

TRAFFIC SIGNAL LAYOUT SH 289 AT CR 53/CR 88

SCALE: 1"=40' SHEET 1 OF 4

DESIGN	FED. RD. DIV. NO.	FEDERAL AID PROJECT NO.		HIGHWAY NO.
JAB	6	(SEE TITLE SHEET)		SH 289
GRAPHICS JAB	STATE	DISTRICT	COUNTY	SHEET NO.
CHECK LDL	TEXAS	18	COLLIN	381
CHECK APM	CONTROL	SECTION	JOB	
	0091	04	055	

FILE: U:\US 289, 0091-04-055\CR 53-88 permanent.dgn

R-201104-01

C

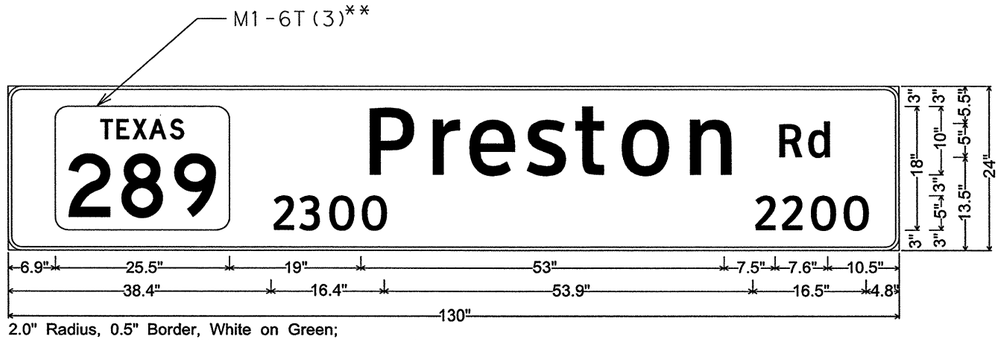

2.0" Radius, 0.5" Border, White on Green;
State Highway 289 M1-6T3A; [] ClearviewHwy-3-W; [Preston] ClearviewHwy-3-W; [Rd] ClearviewHwy-3-W; [2300] ClearviewHwy-3-W; [2200] ClearviewHwy-3-W;

D

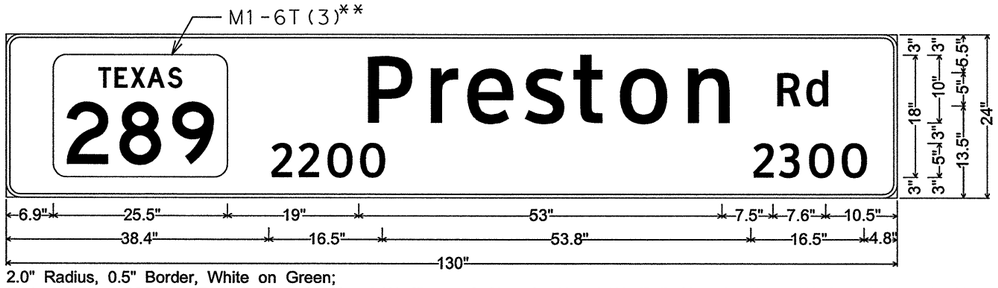

2.0" Radius, 0.5" Border, White on Green;
State Highway 289 M1-6T3A; [] ClearviewHwy-3-W; [Preston] ClearviewHwy-3-W; [Rd] ClearviewHwy-3-W; [2200] ClearviewHwy-3-W; [2300] ClearviewHwy-3-W;

E

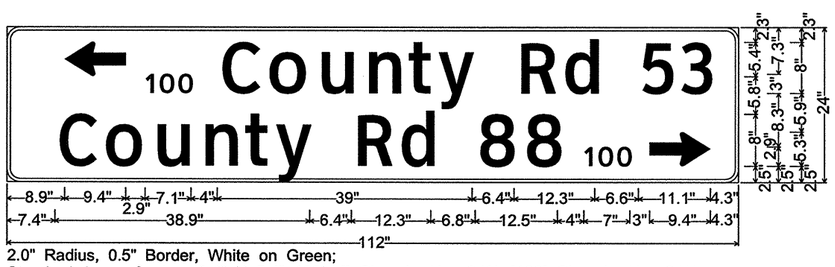

2.0" Radius, 0.5" Border, White on Green;
Standard Arrow Custom 9.4" X 5.4" 180°; [] ClearviewHwy-3-W; [100] ClearviewHwy-3-W;
[County Rd 53] ClearviewHwy-3-W; [] ClearviewHwy-3-W; [County Rd 88] ClearviewHwy-3-W; [] ClearviewHwy-3-W;
[] ClearviewHwy-3-W; [100] ClearviewHwy-3-W; Standard Arrow Custom 9.4" X 5.4" 0°;

F

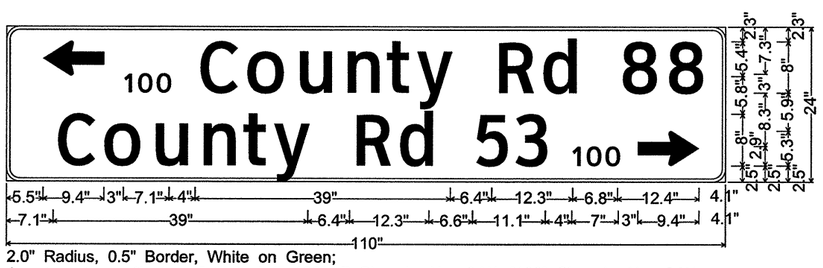

2.0" Radius, 0.5" Border, White on Green;
Standard Arrow Custom 9.4" X 5.4" 180°; [] ClearviewHwy-3-W; [100] ClearviewHwy-3-W;
[County Rd 88] ClearviewHwy-3-W; [] ClearviewHwy-3-W; [County Rd 53] ClearviewHwy-3-W;
[] ClearviewHwy-3-W; [] ClearviewHwy-3-W; [100] ClearviewHwy-3-W; Standard Arrow Custom 9.4" X 5.4" 0°;

GENERAL NOTES:
ALL LETTERING SHALL BE SERIES CV-3W.
ALL BORDERS SHALL BE 0.5".
EACH BORDER RADIUS SHALL BE 2.0".
ALPHABETS AND LATERAL SPACING BETWEEN LETTERS AND NUMERALS SHALL CONFORM WITH THE TEXAS "MANUAL ON UNIFORM TRAFFIC CONTROL DEVICES FOR STREETS AND HIGHWAYS" LATEST ADDITION AND ANY APPROVED CHANGES THERETO. LATERAL SPACING OF TEXT SHALL BE SUCH AS TO PROVIDE A BALANCED APPEARANCE.
SIGN BACKGROUNDS SHALL BE OF FLAT SURFACE REFLECTIVE SHEETING CONFORMING WITH THE SPECIFICATIONS (TYPE C).
THE SIGN BLANKS SHALL BE ONE PIECE SHEET ALUMINUM ALLOY 0.080 INCHES THICK CONFORMING WITH THE ITEM "ALUMINUM SIGNS (TYPE A)".
ALL SHIELDS SHALL BE DIRECT APPLY SHEETING.

** USE 24" SHIELD DESIGN AND REDUCE DIMENSIONS BY 25%

A

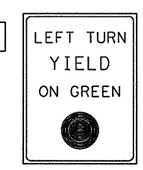

R10-12
24" X 30"
2 EA.

SIGN R10-3eL
9" X 15"
4 EA

G

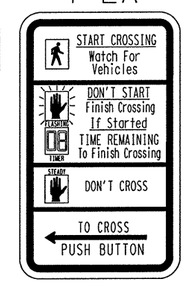

SIGN R10-3eR
9" X 15"
4 EA

H

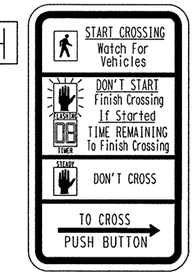

STATE OF TEXAS
LISA D. LAWSON
65131
REGISTERED PROFESSIONAL ENGINEER

Lisa D. Lawson, P.E. 4/11/11
Signature Date

Texas Department of Transportation
© 2011

TRAFFIC SIGNAL LAYOUT
SH 289 AT CR 53/CR 88

SCALE: 1"=40' SHEET 2 OF 4

DESIGN	FED. RD. DIV. NO.	FEDERAL AID PROJECT NO.		HIGHWAY NO.
JAB	6	(SEE TITLE SHEET)		SH 289
GRAPHICS JAB	STATE	DISTRICT	COUNTY	SHEET NO.
CHECK LDL	TEXAS	18	COLLIN	382
CHECK APM	CONTROL 0091	SECTION 04	JOB 055	

FILE: U:\US 289, 0091-04-055\CR 53-88 permanent.dgn

R-201104-01

SIGNAL HEADS (ITEM 682)

SIGNAL HEAD NUMBER	12" SIGNAL INDICATION: SIGNAL HEAD TYPE	BACK PLATE: 3 SEC	BACK PLATE: 4 SEC	BACK PLATE: 5 SEC	VEH SIG SEC WITH LED LAMP: ⊖	G	⊖	Y	R	LED COUNTDOWN PED SIGNAL
		EA.	EA.	EA.	EA.	EA.	EA.	EA.	EA.	EA.
1	H4LT		1		1	1		1	1	
2	H3	1				1		1	1	
3	143C									1
4										1
5	H5LT			1	1	1	1	1	1	
6	H3	1				1		1	1	
7	H3	1				1		1	1	
8	143C									1
9										1
10	H4LT		1		1	1		1	1	
11	H3	1				1		1	1	
12	143C									1
13										1
14	H5LT			1	1	1	1	1	1	
15	H3	1				1		1	1	
16	H3	1				1		1	1	
17	143C									1
18										1
TOTALS		6	2	2	4	10	2	10	10	8

H3 H4LT H5LT PED SIGNAL 143C

CONDUIT RUNS

RUN #	CONDUIT TYPE (LF): 2" TRENCH PVC	3" TRENCH PVC	4" TRENCH PVC	3" BORE PVC	WIRE SIZE AND TYPE (EA) CONDUCTORS: NO. 6 XHHW	NO. 6 BARE	NO. 8 XHHW	NO. 8 BARE	SIGNAL CABLE: 5 CNDR TY-A 14 AWG	16 CNDR TY-A 14 AWG	SSR COAX	△△ VIVDS CABLE	** RADAR CABLE	TOTAL LENGTH OF RUNS (LF)	RUN #
1			2@16(E)		2(E)	2(E)				4	1	4	2	16	1
2	7(E)				2(E)	1(E)	2(E)							7	2
3		9					2	1	1	1	1	1	1	9	3
4	13							1	1					13	4
5				135				1		1		1		135	5
6	16							1	1					16	6
7		26						1	1	1		1		26	7
8				120			2	1		2		2	1	120	8
9		27						1	1	1		1		27	9
10	20							1	1					20	10
11				143			2	1		1		1	1	143	11
12		23					2	1	1	1		1	1	23	12
13	32							1	1					32	13
	81	85	-	398	-	-	590	564	166	667	25	667	327	TOTAL	

** FOR CONTRACTOR'S INFORMATION ONLY
CABLE IS SUBSIDIARY TO ITEM 680

△△ VIVDS COAXIAL CABLE INCLUDES
3- CONDUCTOR POWER CABLE

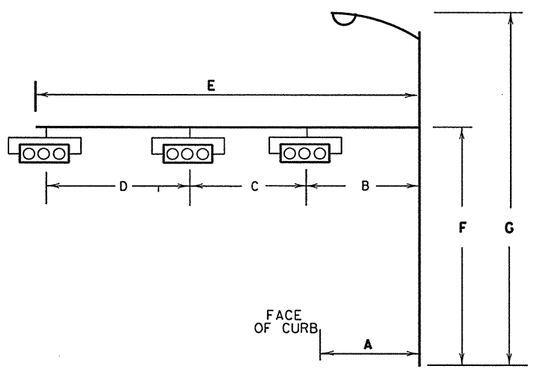

SIGNAL HEAD & POLE PLACEMENT (LF)

POLE NUMBER	FND. TYPE WIND ZONE 80 MPH	DRILLED SHAFT LENGTH: 24" DIA SUB TO ITEM 687 LF	36" DIA TYPE A ITEM 416 LF	48" DIA TYPE A ITEM 416 LF	WIRE INSIDE POLE (LF): (ITEM 684) SIG. CABLE TY-A, SIGNAL HEADS: 5 CNDR CABLE 14 AWG	7 CNDR CABLE 14 AWG	PED HEADS: 5 CNDR CABLE 14 AWG	(ITEM 620) LUMINAIRE: NO. 12 XHHW	PUSH BUTTON ASSY (EA)	RADAR * DETECTOR CABLE	(ITEM 6006) SSR COAX CABLE	(ITEM 6266) VIVDS COAX CABLE	** NO. OF HEADS	LUM-A	DIMENSION (LF): A	B	C	D	E	F	G
P1	36-A		13.0		51.0	63.0	20.0	-	1.0	-		57.0	2		15	32	12	-	48	19	-
P2	24-A	4.0							1.0											5	
P3	36-A		13.0		94.0	65.0	20.0	80.0	1.0	67.0		57.0	3	1	13	22	12	12	48	19	35
P4	24-A	4.0							1.0											5	
P5	36-A		13.0		47.0	59.0	20.0	-	1.0	-		51.0	2		14	28	12	-	44	19	-
P6	24-A	4.0							1.0											5	
P7	36-A		13.0		90.0	63.0	20.0	80.0	1.0	66.0	35.0	57.0	3	1	12	20	12	12	48	19	35
P8	24-A	4.0							1.0											5	
TOTAL		16.0	52.0		282.0	250.0	80.0	160.0	8.0	133.0	35.0	222.0									

* FOR CONTRACTOR'S INFORMATION ONLY
CABLE IS SUBSIDIARY TO ITEM 680

** DOES NOT INCLUDE PED HEADS
OR VERTICAL HEADS

STATE OF TEXAS
LISA D. LAWSON
65131
REGISTERED PROFESSIONAL ENGINEER

Lisa D Lawson, P.E. 4/11/11
Signature Date

Texas Department of Transportation
© 2011

TRAFFIC SIGNAL LAYOUT
SH 289 CR 53/CR 88

SHEET 3 OF 4

DESIGN	FED. RD. DIV. NO.	FEDERAL AID PROJECT NO.		HIGHWAY NO.
JAB	6	(SEE TITLE SHEET)		SH 289
GRAPHICS JAB	STATE	DISTRICT	COUNTY	SHEET NO.
CHECK LDL	TEXAS	18	COLLIN	383
CHECK	CONTROL	SECTION	JOB	
APM	0091	04	055	

FILE: U:\US 289, 0091-04-055\CR 53-88 permanent charts.dgn

CABLE TERMINATION CHART

CNDR. COLOR	CABLE 1 FROM P1 TO CNTRL. 16 CNDR.	CABLE 2 FROM P2 TO P1 5 CNDR.	CABLE 3 FROM P3 TO CNTRL. 16 CNDR.	CABLE 4 FROM P4 TO P3 5 CNDR.	CABLE 5 FROM P5 TO CNTRL. 16 CNDR.	CABLE 6 FROM P6 TO P5 5 CNDR.	CABLE 7 FROM P7 TO CNTRL. 16 CNDR.	CABLE 8 FROM P8 TO P7 5 CNDR.
BLACK	PB COMMON	PB COMMON	PB COMMON	PB COMMON	PB COMMON	PB COMMON	PB COMMON	PB COMMON
WHITE	S. COMMON	SPARE	S. COMMON	SPARE	S. COMMON	SPARE	S. COMMON	SPARE
RED	SH 1,2 R	Ø8 PED CALL	SH 5,6,7 R	Ø2 PED CALL	SH 10,11 R	Ø4 PED CALL	SH 14,15,16 R	Ø6 PED CALL
GREEN	SH 1,2 G/~~<G~~	SPARE	SH 5,6,7 G	SPARE	SH 10,11 G/~~<G~~	SPARE	SH 14,15,16 G	SPARE
ORANGE	SH 1,2 Y	SPARE	SH 5,6,7 Y	SPARE	SH 10,11 Y	SPARE	SH 14,15,16 Y	SPARE
BLUE	SPARE		SH 5 ~~<G~~		SPARE		SH 14 ~~<G~~	
WHITE/ BLACK	SPARE		SH 5 ~~<Y~~		SPARE		SH 14 ~~<Y~~	
RED/ BLACK	SPARE		SPARE		SPARE		SPARE	
GRN/ BLACK	SPARE		SPARE		SPARE		SPARE	
ORANGE/ BLACK	Ø6 PED CALL		Ø8 PED CALL		Ø2 PED CALL		Ø4 PED CALL	
BLUE/ BLACK	SH 3 W		SH 8 W		SH 12 W		SH 17 W	
BLACK/ WHITE	SH 3 DW		SH 8 DW		SH 12 DW		SH 17 DW	
RED/ WHITE	SPARE		SPARE		SPARE		SPARE	
GRN/ WHITE	Ø8 PED CALL		Ø2 PED CALL		Ø4 PED CALL		Ø6 PED CALL	
BLUE/ WHITE	SH 4 W		SH 9 W		SH 13 W		SH 18 W	
BLACK/ RED	SH 4 DW		SH 9 DW		SH 13 DW		SH 18 DW	

GROUND BOX SUMMARY (ITEM 624)

TYPE	DESCRIPTION	UNIT	QTY.
A	NO.122311 W/ APRON	EA	2
C	NO.162911 W/ APRON	EA	1

VIVDS AND RADAR DETECTION DETAILS

CAMERA/ RADAR	MOUNTING LOCATION	MOUNTING HEIGHT	ZONE LOCATION	ZONE
C1	MAST ARM P1	24'	STOPBAR	Ø8-A
C2	MAST ARM P3	24'	STOPBAR	Ø2-A
				Ø2-B
				Ø5-A
C3	MAST ARM P5	24'	STOPBAR	Ø4-A
C4	MAST ARM P7	24'	STOPBAR	Ø6-A
				Ø6-B
				Ø1-A
R1	MAST ARM P3	19'	SETBACKS	PHASE 6 FROM STOP BAR 100' TO 500'
R2	MAST ARM P7	19'	SETBACKS	PHASE 2 FROM STOP BAR 100' TO 500'

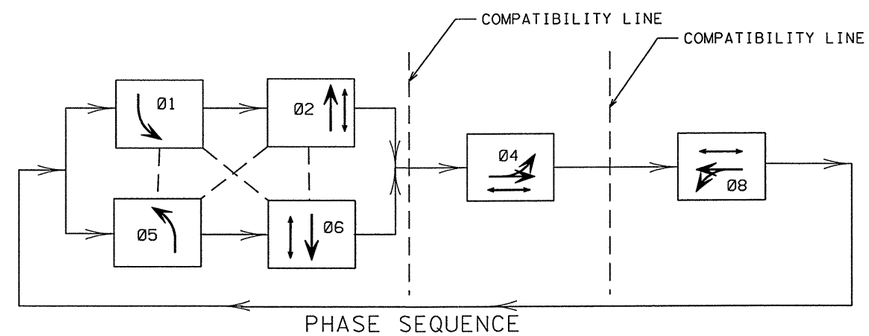

PHASE SEQUENCE

Ø1 AND Ø5 ARE PROTECTED/PERMITTED LEFT TURN PHASES

STATE OF TEXAS
LISA D. LAWSON
65131
REGISTERED PROFESSIONAL ENGINEER

Lisa D Lawson, P.E. 4/14/11
Signature Date

Texas Department of Transportation
© 2011

TRAFFIC SIGNAL LAYOUT SH 289 AT CR 53/CR 88

SHEET 4 OF 4

DESIGN	FED. RD. DIV. NO.	FEDERAL AID PROJECT NO.		HIGHWAY NO.
JAB	6	(SEE TITLE SHEET)		SH 289
GRAPHICS JAB	STATE	DISTRICT	COUNTY	SHEET NO.
CHECK LDL	TEXAS	18	COLLIN	384
CHECK	CONTROL	SECTION	JOB	
APM	0091	04	055	

FILE: U:\US 289, 0091-04-055\CR 53-88 permanent charts.dgn

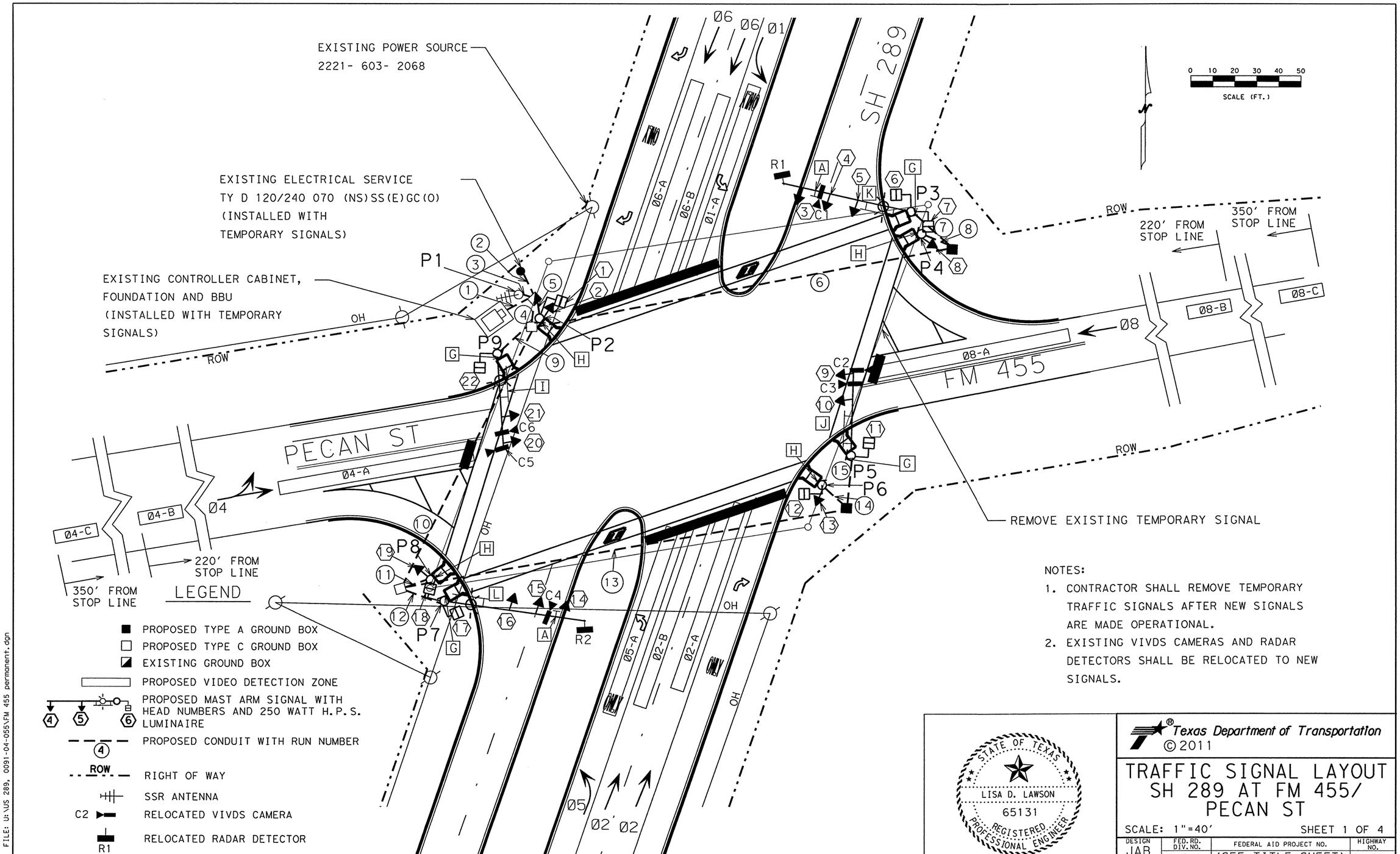

NOTES:

1. CONTRACTOR SHALL REMOVE TEMPORARY TRAFFIC SIGNALS AFTER NEW SIGNALS ARE MADE OPERATIONAL.
2. EXISTING VIVDS CAMERAS AND RADAR DETECTORS SHALL BE RELOCATED TO NEW SIGNALS.

STATE OF TEXAS
LISA D. LAWSON
65131
REGISTERED PROFESSIONAL ENGINEER

Lisa D Lawson, P.E. 4/14/11
Signature Date

Texas Department of Transportation
© 2011

TRAFFIC SIGNAL LAYOUT SH 289 AT FM 455/ PECAN ST

SCALE: 1"=40' SHEET 1 OF 4

DESIGN	FED. RD. DIV. NO.	FEDERAL AID PROJECT NO.		HIGHWAY NO.
JAB	6	(SEE TITLE SHEET)		SH 289
GRAPHICS JAB	STATE	DISTRICT	COUNTY	SHEET NO.
CHECK LDL	TEXAS	18	COLLIN	385
	CONTROL	SECTION	JOB	
CHECK APM	0091	04	055	

FILE: U:\US 289, 0091-04-055\FM 455 permanent.dgn

R-201104-01

I

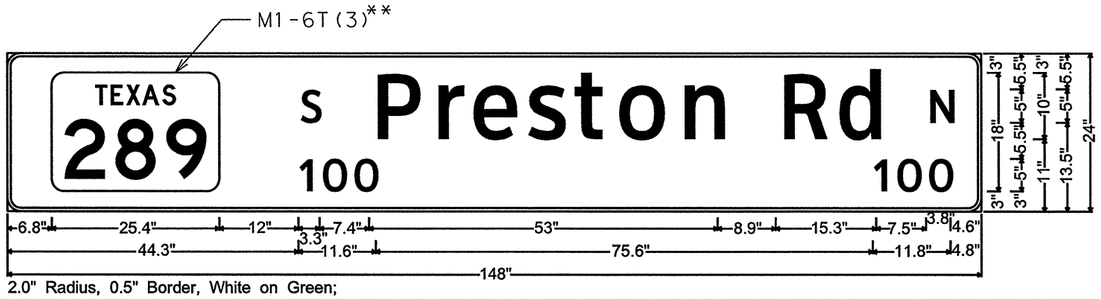

2.0" Radius, 0.5" Border, White on Green;
State Highway 289 M1-6T3A; [S] ClearviewHwy-3-W; [Preston Rd] ClearviewHwy-3-W; [N] ClearviewHwy-3-W; [100] ClearviewHwy-3-W;
[100] ClearviewHwy-3-W;

J

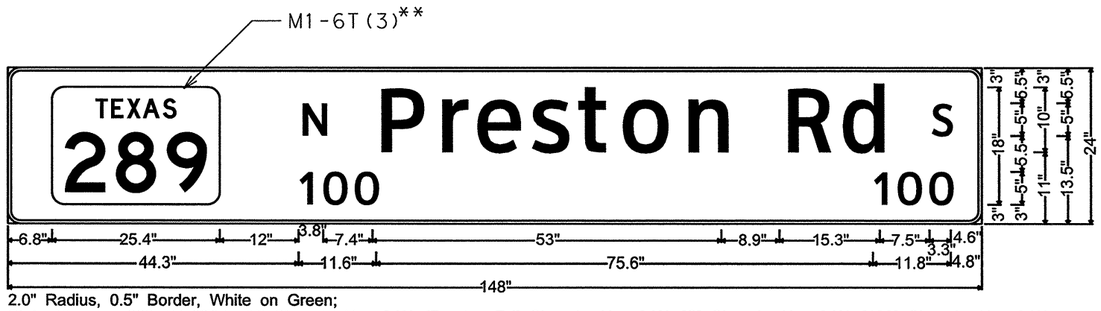

2.0" Radius, 0.5" Border, White on Green;
State Highway 289 M1-6T3A; [N] ClearviewHwy-3-W; [Preston Rd] ClearviewHwy-3-W; [S] ClearviewHwy-3-W; [100] ClearviewHwy-3-W;
[100] ClearviewHwy-3-W;

K

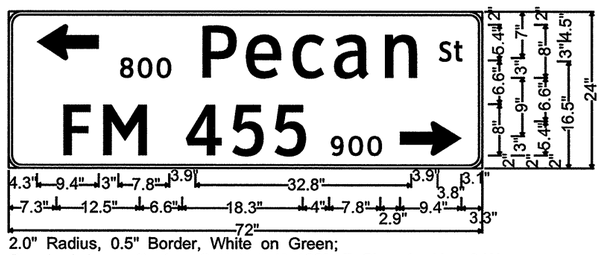

2.0" Radius, 0.5" Border, White on Green;
Standard Arrow Custom 9.4" X 5.4" 180°; [] ClearviewHwy-3-W;
[800] ClearviewHwy-3-W; [Pecan] ClearviewHwy-3-W;
[St] ClearviewHwy-3-W; [] ClearviewHwy-3-W;
[FM 455] ClearviewHwy-3-W; [] ClearviewHwy-3-W;
[900] ClearviewHwy-3-W; Standard Arrow Custom 9.4" X 5.4" 0°;

A

R10-12
24" X 30"
2 EA.

L

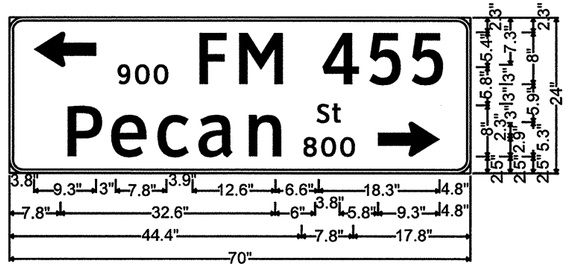

2.0" Radius, 0.5" Border, White on Green;
Standard Arrow Custom 9.4" X 5.4" 180°; [] ClearviewHwy-3-W;
[900] ClearviewHwy-3-W; [FM 455] ClearviewHwy-3-W;
[] ClearviewHwy-3-W; [Pecan] ClearviewHwy-3-W; [] ClearviewHwy-3-W;
[St] ClearviewHwy-3-W; [800] ClearviewHwy-3-W;
Standard Arrow Custom 9.4" X 5.4" 0°;

GENERAL NOTES:
ALL LETTERING SHALL BE SERIES CV-3W.
ALL BORDERS SHALL BE 0.5".
EACH BORDER RADIUS SHALL BE 2.0".
ALPHABETS AND LATERAL SPACING BETWEEN LETTERS AND NUMERALS SHALL CONFORM WITH THE TEXAS "MANUAL ON UNIFORM TRAFFIC CONTROL DEVICES FOR STREETS AND HIGHWAYS" LATEST ADDITION AND ANY APPROVED CHANGES THERETO. LATERAL SPACING OF TEXT SHALL BE SUCH AS TO PROVIDE A BALANCED APPEARANCE.
SIGN BACKGROUNDS SHALL BE OF FLAT SURFACE REFLECTIVE SHEETING CONFORMING WITH THE SPECIFICATIONS (TYPE C).
THE SIGN BLANKS SHALL BE ONE PIECE SHEET ALUMINUM ALLOY 0.080 INCHES THICK CONFORMING WITH THE ITEM "ALUMINUM SIGNS (TYPE A)".
ALL SHIELDS SHALL BE DIRECT APPLY SHEETING.

** USE 24" SHIELD DESIGN AND REDUCE DIMENSIONS BY 25%

G

SIGN R10-3eL
9" X 15"
4 EA

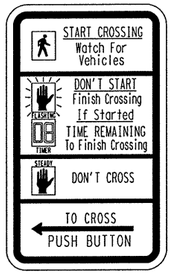

H

SIGN R10-3eR
9" X 15"
4 EA

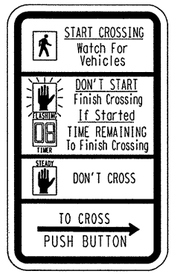

STATE OF TEXAS
LISA D. LAWSON
65131
REGISTERED PROFESSIONAL ENGINEER

Signature, P.E. Date 4/14/11

Texas Department of Transportation
© 2011

TRAFFIC SIGNAL LAYOUT
SH 289 AT FM 455/
PECAN ST

SHEET 2 OF 4

DESIGN	FED. RD. DIV. NO.	FEDERAL AID PROJECT NO.		HIGHWAY NO.
JAB	6	(SEE TITLE SHEET)		SH 289
GRAPHICS JAB	STATE	DISTRICT	COUNTY	SHEET NO.
CHECK LDL	TEXAS	18	COLLIN	386
CHECK	CONTROL	SECTION	JOB	
APM	0091	04	055	

FILE: U:\US 289, 0091-04-055\FM 455 permanent.dgn

R-201104-01

SIGNAL HEADS (ITEM 682)

SIGNAL HEAD NUMBER	12" SIGNAL INDICATION: SIGNAL HEAD TYPE	BACK PLATE: 3 SEC EA.	4 SEC EA.	5 SEC EA.	VEH SIG SECT WITH LED LAMP: ⊕ EA.	G EA.	⊕ EA.	Y EA.	R EA.	PED SIG SEC LED LAMP EA.
1	152A									1
2	V3	1				1		1	1	
3	H5LT			1	1	1	1	1	1	
4	H3	1				1		1	1	
5	H3	1				1		1	1	
6	143C									1
7										1
8	V3	1				1		1	1	
9	H4LT		1		1	1		1	1	
10	H3	1				1		1	1	
11	152A									1
12	152A									1
13	V3	1				1		1	1	
14	H5LT			1	1	1	1	1	1	
15	H3	1				1		1	1	
16	H3	1				1		1	1	
17	143C									1
18										1
19	V3	1				1		1	1	
20	H4LT		1		1	1		1	1	
21	H3	1				1		1	1	
22	152A									1
TOTALS		10	2	2	4	14	2	14	14	8

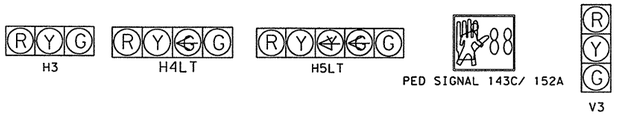

CONDUIT RUNS

RUN #	CONDUIT TYPE (LF): 2" TRENCH PVC	3" TRENCH PVC	4" TRENCH PVC	3" BORE PVC	4" BORE PVC	WIRE SIZE AND TYPE (EA) CONDUCTORS: NO. 6 XHHW	NO. 6 BARE	NO. 8 XHHW	NO. 8 BARE	SIGNAL CABLE: 10 CNDR TY-A 14 AWG	16 CNDR TY-A 14 AWG	SSR COAX	△△ VIVDS CABLE	✕✕ RADAR CABLE	TOTAL LENGTH OF RUNS (LF)	RUN #
1			3@21(E)			2(E)	3(E)			4	4	1(E)	6	2	21	1
2	15(E)					2(E)	1(E)	2(E)							15	2
3	8(E)								1(E)			1(E)			8	3
4			2@13					2	2	3	4		6	2	13	4
5	9								1	1					9	5
6				195				2	1	1	1		1	1	195	6
7		26						2	1		1		1	1	26	7
8	16								1	1					16	8
9		20						2	1		1		2		20	9
10					135			2	1	2	2		3	1	135	10
11	15								1	1					15	11
12		21						2	1		1		1	1	21	12
13				207					1	1	1		2		207	13
14	15								1	1					15	14
15		24							1		1		2		24	15
	55	91	26	402	135	-	-	820	709	850	899	-	1353	445	TOTAL	

** FOR CONTRACTOR'S INFORMATION ONLY
CABLE IS SUBSIDIARY TO ITEM 680

△△ VIVDS COAXIAL CABLE INCLUDES
3- CONDUCTOR POWER CABLE

SIGNAL HEAD & POLE PLACEMENT (LF)

POLE NUMBER	FND. TYPE WIND ZONE 80 MPH	DRILLED SHAFT LENGTH: 30" DIA RDWY ILL ITEM 416 LF	24" DIA SUB TO ITEM 687 LF	36" DIA TYPE A ITEM 416 LF	48" DIA TYPE A ITEM 416 LF	WIRE INSIDE POLE (LF): (ITEM 684) SIG. CABLE TY-A SIGNAL HEADS: 5 CNDR CABLE 14 AWG	7 CNDR CABLE 14 AWG	PED HEADS: 5 CNDR CABLE 14 AWG	(ITEM 620) LUMINAIRE: NO. 12 XHHW	PUSH BUTTON ASSY (EA)	RADAR * DETECTOR CABLE	(ITEM 6006) SSR COAX CABLE	(ITEM 6266) VIVDS COAX CABLE	** NO. OF HEADS	LUM-A	DIMENSION (LF): A	B	C	D	E	F	G
P1△		10.0(E)								-		50.0(E)				-	-	-	-	-	50	-
P2	24-A		6.0			13.0	-	10.0	-	1.0	-		-	-							10	
P3	48-A				22.0	101.0	70.0	20.0	80.0	1.0	78.0		60.0	3	1	13	25	13	13	60	19	35
P4	24-A		6.0			13.0				1.0				-							10	
P5	36-A			13.0		45.0	57.0	10.0	-	1.0	-		108.0	2		14	26	12	-	40	19	-
P6	24-A		6.0			13.0		10.0		1.0				-							10	
P7	48-A				22.0	110.0	73.0	20.0	80.0	1.0	83.0		66.0	3	1	14	30	12	12	65	19	35
P8	24-A		6.0			13.0				1.0				-							10	
P9	36-A			13.0		48.0	60.0	10.0	80.0	1.0	-		117.0	2	1	13	29	12	-	44	19	35
TOTAL		-	24.0	26.0	44.0	356.0	260.0	80.0	240.0	8.0	161.0	-	351.0									

△ INSTALLED WITH TEMPORARY SIGNAL

* FOR CONTRACTOR'S INFORMATION ONLY
CABLE IS SUBSIDIARY TO ITEM 680

** DOES NOT INCLUDE PED HEADS
OR VERTICAL HEADS

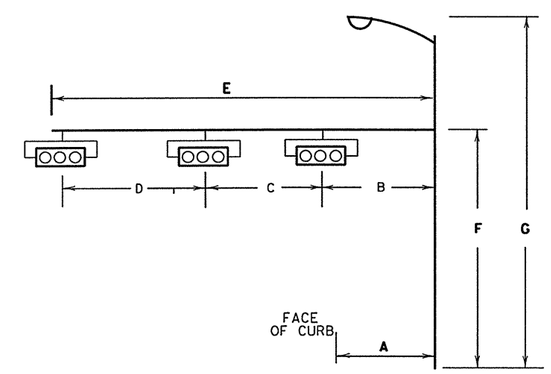

STATE OF TEXAS
LISA D. LAWSON
65131
REGISTERED PROFESSIONAL ENGINEER

Lisa D Lawson, P.E. 4/26/11
Signature Date

Texas Department of Transportation
© 2011

TRAFFIC SIGNAL LAYOUT SH 289 AT FM 455/ PECAN ST

SHEET 3 OF 4

DESIGN	FED. RD. DIV. NO.	FEDERAL AID PROJECT NO.		HIGHWAY NO.
JAB	6	(SEE TITLE SHEET)		SH 289
GRAPHICS JAB	STATE	DISTRICT	COUNTY	SHEET NO.
CHECK LDL	TEXAS	18	COLLIN	387
CHECK	CONTROL	SECTION	JOB	
APM	0091	04	055	

FILE: U:\US 289, 0091-04-055\FM 455 permanent charts.dgn

R-201104-01

CABLE TERMINATION CHART

CNDR. COLOR	CABLE 1 FROM P2 TO CNTRL. 10 CNDR.	CABLE 2 FROM P3 TO CNTRL. 16 CNDR.	CABLE 3 FROM P4 TO CNTRL. 10 CNDR.	CABLE 4 FROM P5 TO CNTRL. 16 CNDR.	CABLE 5 FROM P6 TO CNTRL. 10 CNDR.	CABLE 6 FROM P7 TO CNTRL. 16 CNDR.	CABLE 7 FROM P8 TO CNTRL. 10 CNDR.	CABLE 8 FROM P9 TO CNTRL. 16 CNDR.
BLACK	PB COMMON	PB COMMON	PB COMMON	PB COMMON	PB COMMON	PB COMMON	PB COMMON	PB COMMON
WHITE	S. COMMON	S. COMMON	S. COMMON	S. COMMON	S. COMMON	S. COMMON	S. COMMON	S. COMMON
RED	SH 2 R	SH 3,4,5 R	SH 8 R	SH 9,10 R	SH 13 R	SH 14,15,16 R	SH 19 R	SH 20,21 R
GREEN	SH 2 G	SH 3,4,5 G	SH 8 G	SH 9,10 G/~~G~~	SH 13 G	SH 14,15,16 G	SH 19 G	SH 20,21 G/~~G~~
ORANGE	SH 2 Y	SH 3,4,5 Y	SH 8 Y	SH 9,10 Y	SH 13 Y	SH 14,15,16 Y	SH 19 Y	SH 20,21 Y
BLUE	Ø8 PED CALL	SH 3 ~~G~~	Ø2 PED CALL	SPARE	Ø4 PED CALL	SH 14 ~~G~~	Ø6 PED CALL	SPARE
WHITE/ BLACK	SH 1 W	SH 3 ~~Y~~	SPARE	SPARE	SH 12 W	SH 14 ~~Y~~	SPARE	SPARE
RED/ BLACK	SH 1 DW	SPARE	SPARE	SPARE	SH 12 DW	SPARE	SPARE	SPARE
GRN/ BLACK	SPARE	SPARE	SPARE	SPARE	SPARE	SPARE	SPARE	SPARE
ORANGE/ BLACK	SPARE	SPARE	SPARE	SPARE	SPARE	SPARE	SPARE	SPARE
BLUE/ BLACK		SPARE		Ø2 PED CALL		Ø4 PED CALL		Ø6 PED CALL
BLACK/ WHITE		SH 7 W		SH 11 W		SH 17 W		SH 22 W
RED/ WHITE		SH 7 DW		SH 11 DW		SH 17 DW		SH 22 DW
GRN/ WHITE		Ø8 PED CALL		SPARE		SPARE		SPARE
BLUE/ WHITE		SH 6 W		SPARE		SH 18 W		SPARE
BLACK/ RED		SH 6 DW		SPARE		SH 18 DW		SPARE

VIVDS AND RADAR DETECTION DETAILS

CAMERA/ RADAR	MOUNTING LOCATION	MOUNTING HEIGHT	ZONE LOCATION	ZONE	SETBACK DISTANCE
C1	MAST ARM P3	24′	STOPBAR	02-A	N/A
				02-B	
				05-A	
C2	MAST ARM P5	24′	SETBACKS	08-B	220′
				08-C	350′
C3	MAST ARM P5	24′	STOPBAR	04-A	N/A
C4	MAST ARM P7	24′	STOPBAR	06-A	N/A
				06-B	
				01-A	
C5	MAST ARM P9	24′	SETBACKS	04-B	220′
				04-C	350′
C6	MAST ARM P9	24′	STOPBAR	08-A	N/A
R1	MAST ARM P3	19′	SETBACKS	PHASE 6 FROM STOP BAR 100′ TO 500′	-
R2	MAST ARM P7	19′	SETBACKS	PHASE 2 FROM STOP BAR 100′ TO 500′	-

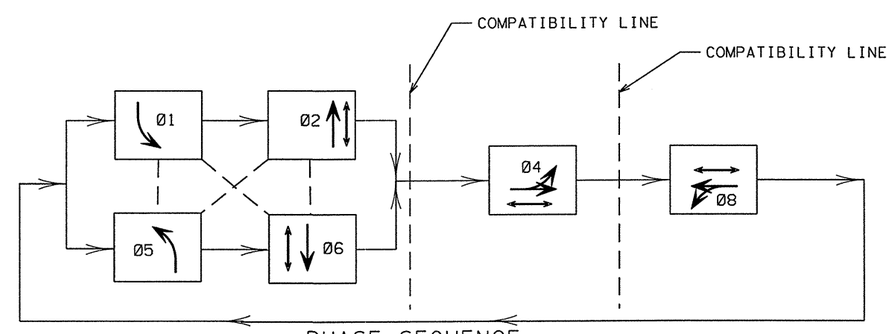

PHASE SEQUENCE

Ø1 AND Ø5 ARE PROTECTED/PERMITTED LEFT TURN PHASES

GROUND BOX SUMMARY (ITEM 624)

TYPE	DESCRIPTION	UNIT	QTY.
A	NO. 122311 W/ APRON	EA	2
C	NO. 162911 W/ APRON	EA	2

STATE OF TEXAS
LISA D. LAWSON
65131
REGISTERED PROFESSIONAL ENGINEER

Lisa Dolan ,P.E. 4/14/11
Signature Date

Texas Department of Transportation
© 2011

TRAFFIC SIGNAL LAYOUT SH 289 AT FM 455/ PECAN ST

SHEET 4 OF 4

DESIGN	FED. RD. DIV. NO.	FEDERAL AID PROJECT NO.		HIGHWAY NO.
JAB	6	(SEE TITLE SHEET)		SH 289
GRAPHICS JAB	STATE	DISTRICT	COUNTY	SHEET NO.
CHECK LDL	TEXAS	18	COLLIN	388
CHECK APM	CONTROL	SECTION	JOB	
	0091	04	055	

FILE: U:\US 289, 0091-04-055\FM 455 permanent charts.dgn

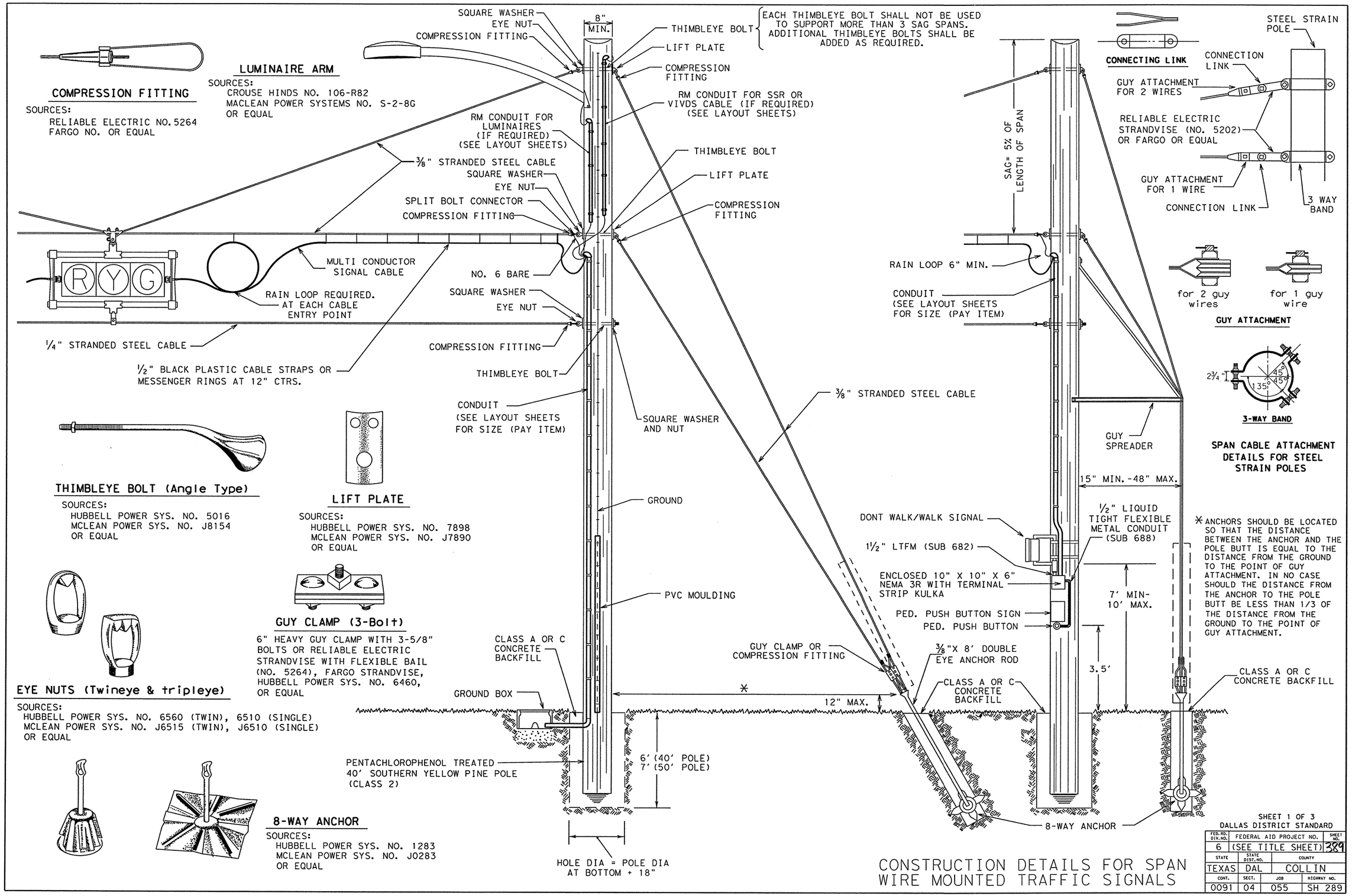
COMPRESSION FITTING
SOURCES:
RELIABLE ELECTRIC NO. 5264
FARGO NO. OR EQUAL
LUMINAIRE ARM
SOURCES:
CROUSE HINDS NO. 106-R82
MACLEAN POWER SYSTEMS NO. S-2-8G
OR EQUAL
SQUARE WASHER
EYE NUT
COMPRESSION FITTING
8" MIN.
THIMBLEYE BOLT
LIFT PLATE
COMPRESSION FITTING
EACH THIMBLEYE BOLT SHALL NOT BE USED TO SUPPORT MORE THAN 3 SAG SPANS. ADDITIONAL THIMBLEYE BOLTS SHALL BE ADDED AS REQUIRED.
RM CONDUIT FOR SSR OR VIVDS CABLE (IF REQUIRED) (SEE LAYOUT SHEETS)
RM CONDUIT FOR LUMINAIRES (IF REQUIRED) (SEE LAYOUT SHEETS)
3/8" STRANDED STEEL CABLE
SQUARE WASHER
EYE NUT
SPLIT BOLT CONNECTOR
COMPRESSION FITTING
THIMBLEYE BOLT
LIFT PLATE
COMPRESSION FITTING
R Y G
MULTI CONDUCTOR SIGNAL CABLE
RAIN LOOP REQUIRED. AT EACH CABLE ENTRY POINT
NO. 6 BARE
SQUARE WASHER
EYE NUT
1/4" STRANDED STEEL CABLE
COMPRESSION FITTING
1/2" BLACK PLASTIC CABLE STRAPS OR MESSENGER RINGS AT 12" CTRS.
THIMBLEYE BOLT
CONDUIT (SEE LAYOUT SHEETS FOR SIZE (PAY ITEM)
SQUARE WASHER AND NUT
3/8" STRANDED STEEL CABLE
GROUND
PVC MOULDING
CLASS A OR C CONCRETE BACKFILL
GROUND BOX
PENTACHLOROPHENOL TREATED 40' SOUTHERN YELLOW PINE POLE (CLASS 2)
6' (40' POLE)
7' (50' POLE)
HOLE DIA = POLE DIA AT BOTTOM + 18"
THIMBLEYE BOLT (Angle Type)
SOURCES:
HUBBELL POWER SYS. NO. 5016
MCLEAN POWER SYS. NO. J8154
OR EQUAL
LIFT PLATE
SOURCES:
HUBBELL POWER SYS. NO. 7898
MCLEAN POWER SYS. NO. J7890
OR EQUAL
GUY CLAMP (3-Bolt)
6" HEAVY GUY CLAMP WITH 3-5/8" BOLTS OR RELIABLE ELECTRIC STRANDVISE WITH FLEXIBLE BAIL (NO. 5264), FARGO STRANDVISE, HUBBELL POWER SYS. NO. 6460, OR EQUAL
EYE NUTS (Twineye & tripleye)
SOURCES:
HUBBELL POWER SYS. NO. 6560 (TWIN), 6510 (SINGLE)
MCLEAN POWER SYS. NO. J6515 (TWIN), J6510 (SINGLE)
OR EQUAL
8-WAY ANCHOR
SOURCES:
HUBBELL POWER SYS. NO. 1283
MCLEAN POWER SYS. NO. J0283
OR EQUAL
SAG= 5% OF LENGTH OF SPAN
RAIN LOOP 6" MIN.
CONDUIT (SEE LAYOUT SHEETS FOR SIZE (PAY ITEM)
GUY SPREADER
15" MIN.-48" MAX.
1/2" LIQUID TIGHT FLEXIBLE METAL CONDUIT (SUB 688)
DONT WALK/WALK SIGNAL
1 1/2" LTFM (SUB 682)
ENCLOSED 10" X 10" X 6" NEMA 3R WITH TERMINAL STRIP KULKA
PED. PUSH BUTTON SIGN
PED. PUSH BUTTON
7' MIN-10' MAX.
3.5'
GUY CLAMP OR COMPRESSION FITTING
3/8"X 8' DOUBLE EYE ANCHOR ROD
CLASS A OR C CONCRETE BACKFILL
12" MAX.
8-WAY ANCHOR
CLASS A OR C CONCRETE BACKFILL
CONNECTING LINK
STEEL STRAIN POLE
CONNECTION LINK
GUY ATTACHMENT FOR 2 WIRES
RELIABLE ELECTRIC STRANDVISE (NO. 5202) OR FARGO OR EQUAL
GUY ATTACHMENT FOR 1 WIRE
CONNECTION LINK
3 WAY BAND
for 2 guy wires
for 1 guy wire
GUY ATTACHMENT
2 3/4"
45°
45°
135°
3-WAY BAND
SPAN CABLE ATTACHMENT DETAILS FOR STEEL STRAIN POLES
* ANCHORS SHOULD BE LOCATED SO THAT THE DISTANCE BETWEEN THE ANCHOR AND THE POLE BUTT IS EQUAL TO THE DISTANCE FROM THE GROUND TO THE POINT OF GUY ATTACHMENT. IN NO CASE SHOULD THE DISTANCE FROM THE ANCHOR TO THE POLE BUTT BE LESS THAN 1/3 OF THE DISTANCE FROM THE GROUND TO THE POINT OF GUY ATTACHMENT.
SHEET 1 OF 3
DALLAS DISTRICT STANDARD
FED. RD. DIV. NO. 6
FEDERAL AID PROJECT NO. (SEE TITLE SHEET)
SHEET NO. 389
STATE TEXAS
STATE DIST. NO. DAL
COUNTY COLLIN
CONT. 0091
SECT. 04
JOB 055
HIGHWAY NO. SH 289
CONSTRUCTION DETAILS FOR SPAN WIRE MOUNTED TRAFFIC SIGNALS

R-201104-01

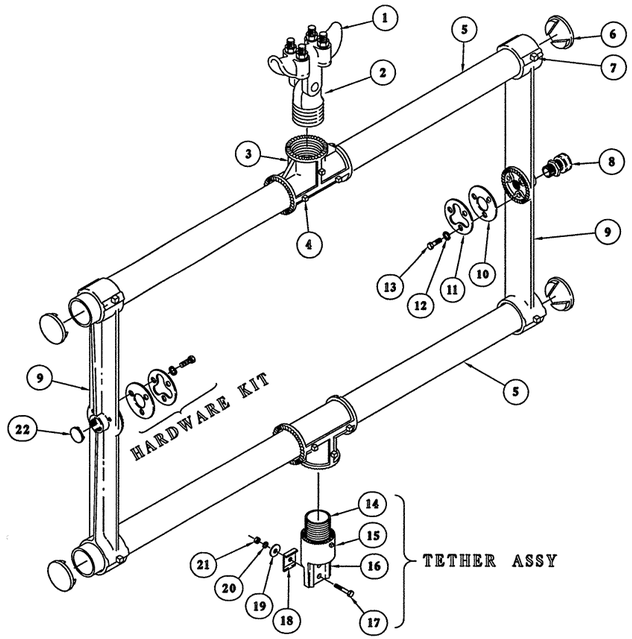

BOTTOM TETHERED, SPAN WIRE SIGNAL HEAD HARDWARE ASSEMBLY (BACKPLATE NOT SHOWN)

ITEM	DESCRIPTION	QTY
1	SPAN WIRE CLAMP, IRON, W/ U-BOLTS	1
2	SPAN WIRE ADAPTER, ALUM W/ STAINLESS BUSHING	1
3	TEE HORIZONTAL SLIP, DIE CAST ALUM	2
4	SCREW, SET SQ HD, 1/4"-20 X 1/2", STAINLESS	6
5	TUBE, 1 1/2" X LENGTH, ALUM	2
6	TUBE CAP, 1 1/2", PLASTIC	4
7	SCREW, SET SQ HD, 5/16"-18 X 5/8", STAINLESS	8
8	CGB, 3/4" .55-.65, ZINC 1	1
9	CAST ARM, FOR HORIZONTAL MOUNTED SIGNAL, ALUM	2
10	GASKET, TRI-BOLT, 1/16" X 70 DURO NEOPRENE	2
11	WASHER, SLOTTED, ZINC 2	2
12	WASHER, LOCK SPLIT, 1/4", STAINLESS	6
13	BOLT, HEX HD, 1/4"-20 X 1 1/2", GRADE 5, STAINLESS	6
14	NIPPLE, ALLTHREAD, 1 1/2" NPS X 2.13", ALUM	1
15	SCREW, SET SQ HD, 1/4"-20 X 5/8", STAINLESS	1
16	BODY, 1 1/2", HANGER, ALUM	1
17	BOLT, HEX HD, 5/16"-18 X 1 1/2", STAINLESS	1
18	PLATE, TETHER, 1-HOLE, ALUM	1
19	WASHER, FENDER, 5/16", STAINLESS	1
20	WASHER, SPLIT LOCK, 5/16", STAINLESS	1
21	NUT, HEX HD, 5/16"-18, STAINLESS	1
22	CAP, EN-3/4, BLUE (FOR CGB)	1

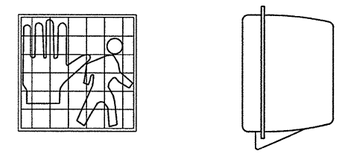

"EGGCRATE" VISOR PEDESTRIAN SIGNAL
WITH ONE-PIECE REFLECTOR

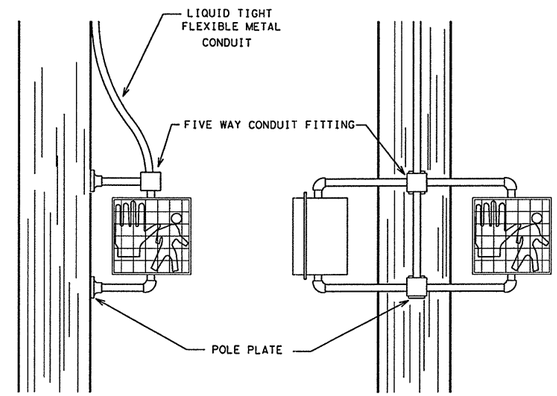

SH 152A
ONE-WAY
ADJUSTABLE FACE SIGNAL FOR
WOOD POLE MOUNTING

SH 143C
TWO-WAY
ADJUSTABLE FACE SIGNAL FOR
WOOD POLE MOUNTING

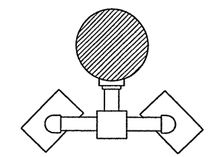

SH 143C
PLAN VIEW

SIGN R10-4bR
SIGN R10-4bL
9"X12"

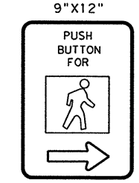

PEDESTRIAN PUSHBUTTON
SIGN DETAILS

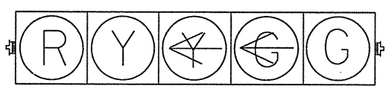

SH H5LT
TYPICAL SPAN WIRE
HORIZONTAL MOUNT
INSTALLATION

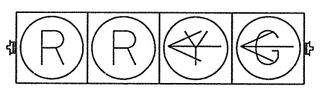

SH H4LT
TYPICAL SPAN WIRE
HORIZONTAL MOUNT
INSTALLATION

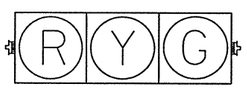

SH H3
TYPICAL SPAN WIRE
HORIZONTAL MOUNT
INSTALLATION

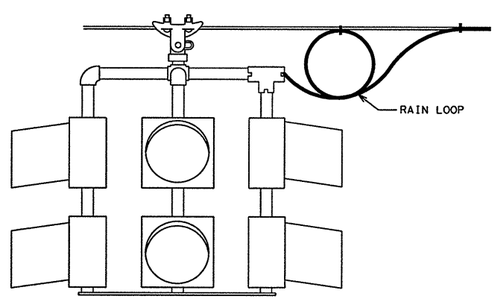

TYPICAL
FLASHING BEACON
INSTALLATION

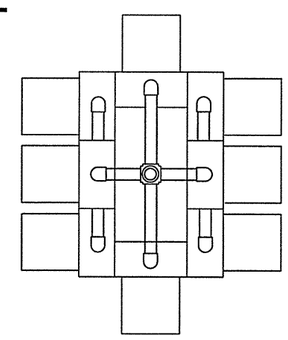

TOP

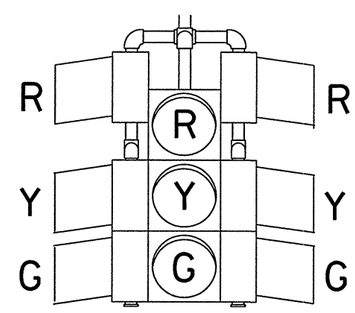

SIDES

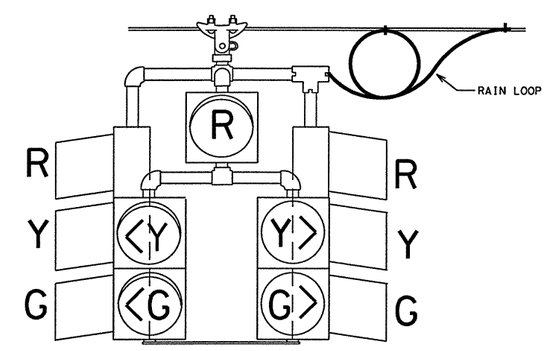

FRONT AND BACK

SHEET 2 OF 3
DALLAS DISTRICT STANDARD

FED. RD. DIV. NO.	FEDERAL AID PROJECT NO.		SHEET NO.
6	(SEE TITLE SHEET)		310
STATE	STATE DIST. NO.	COUNTY	
TEXAS	DAL	COLLIN	
CONT.	SECT.	JOB	HIGHWAY NO.
0091	04	055	SH 289

CONSTRUCTION DETAILS FOR SPAN WIRE MOUNTED TRAFFIC SIGNALS

R-201104-01

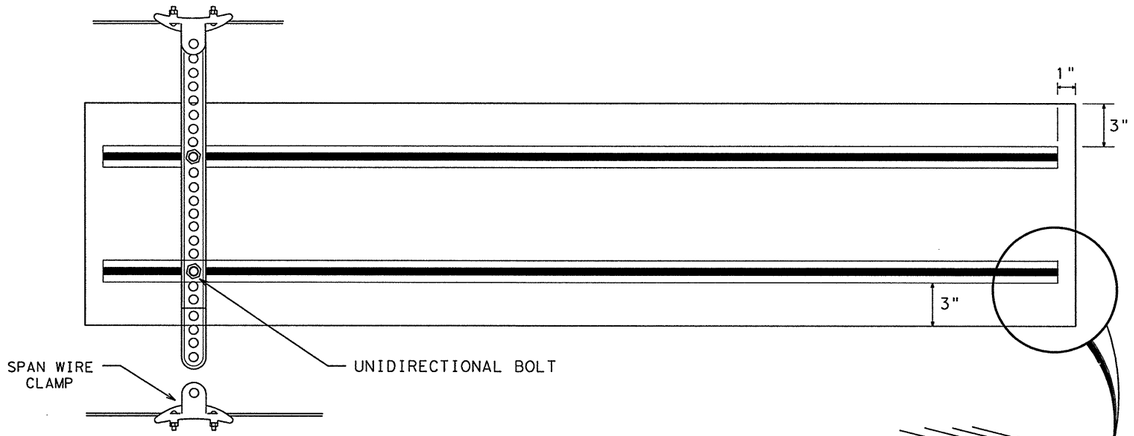

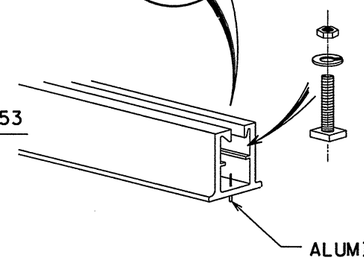

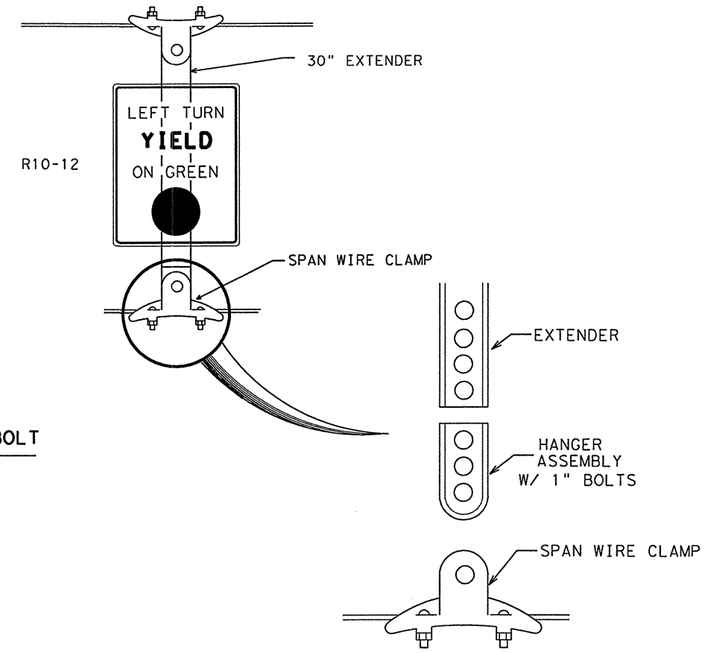

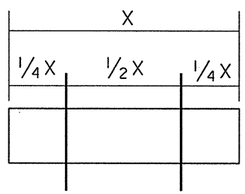

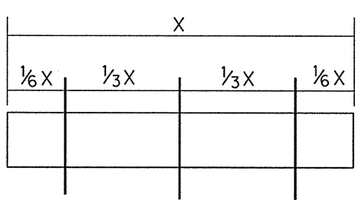

HANGER ASSEMBLY DETAILS

NOTES:
1. BASED ON SIGN WIDTH, THE NUMBER OF VERTICAL SUPPORTS REQUIRED ARE AS FOLLOWS:
   3'-0" OR LESS - 1 SUPPORT REQUIRED
   >3'-0" UP TO 8'-0" - 2 SUPPORTS REQUIRED
   >8'-0" - 3 SUPPORTS REQUIRED
   SEE DIAGRAMS FOR SIGN SUPPORT SPACING
2. FOR STREET NAME SIGNS, EXTRUDED ALUMINUM SHALL BE MOUNTED FOR HORIZONTAL SUPPORT AS SHOWN.

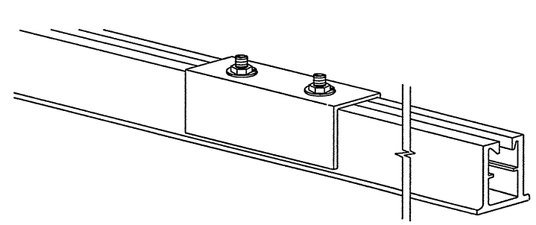

5" ALUMINUM COUPLING

6061-T6

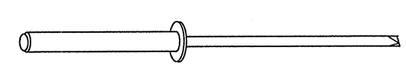

ALUMINUM RIVET

NOTE: ALUMINUM RIVETS SHALL BE USED TO ATTACH THE SIGN TO THE EXTRUDED ALUMINUM. SPACINGS OF RIVETS SHALL BE 6" O.C.

SHEET 3 OF 3
DALLAS DISTRICT STANDARD

FED.RD. DIV.NO.	FEDERAL AID PROJECT NO.		SHEET NO.
6	(SEE TITLE SHEET)		2911
STATE	STATE DIST.NO.	COUNTY	
TEXAS	DAL	COLLIN	
CONT.	SECT.	JOB	HIGHWAY NO.
0091	04	055	SH 289

CONSTRUCTION DETAILS FOR SPAN WIRE MOUNTED TRAFFIC SIGNALS

R-201104-01

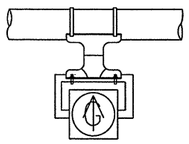

H1TA

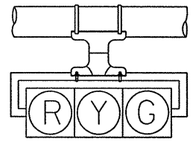

H3

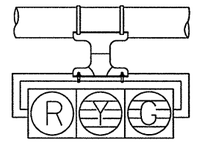

H3L

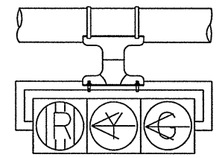

H3LLT

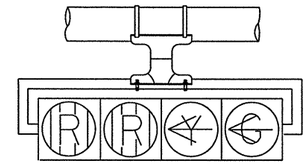

H4LLT

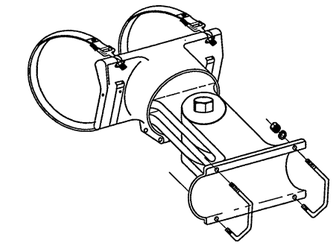

TYPE 2 CLAMP KIT

SHALL BE INSTALLED WHEN ROTATION ABOUT THE HORIZONTAL AND VERTICAL AXES ARE NEEDED.

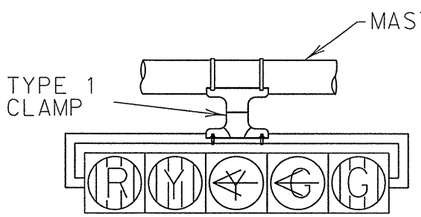

H5LLT

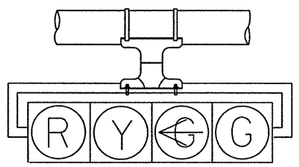

H4LT

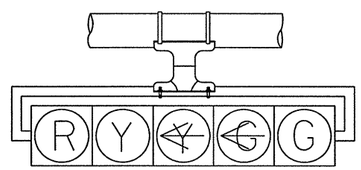

H5LT

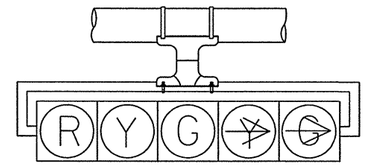

H5RT

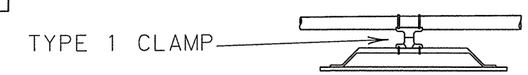

ONE (1) CLAMP SHALL BE USED ON SIGNS LESS THAN OR EQUAL TO 10'-0" IN LENGTH.

TWO (2) CLAMPS SHALL BE USED ON SIGNS GREATER THAN 10'-0" IN LENGTH.

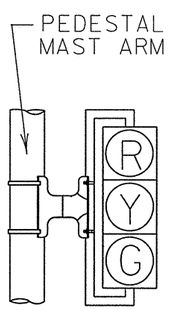

V3

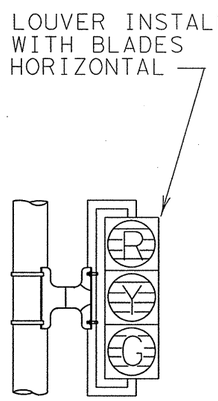

V3L

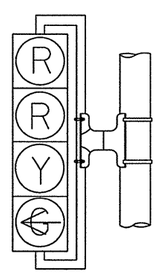

V4LT

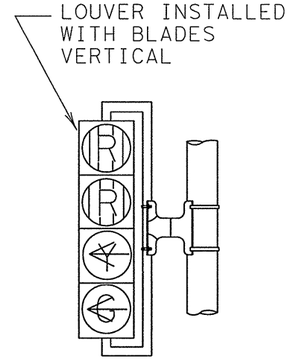

V4LLT

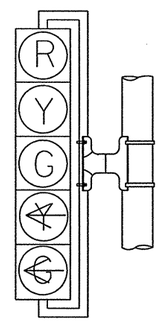

V5LT

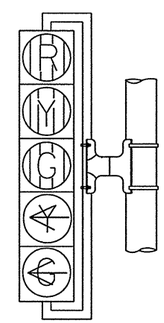

V5LLT

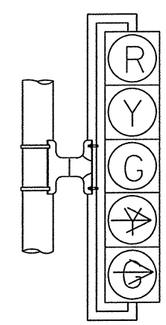

V5RT

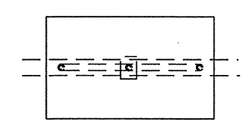

SIGN OR DAMPENING DEVICE ATTACHMENT FOR MAST ARMS

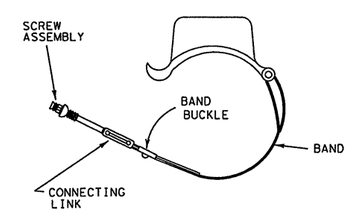

TYPE 1 AND 2 CLAMPS

NOTES:

1. VEHICLE SIGNAL HEADS SHALL BE MOUNTED WITH TYPE 1 CLAMP AND APPROPRIATE TUBING.
2. ALL POLE MOUNTED VEHICLE HEADS SHALL BE INSTALLED ON THE AWAY-FROM-TRAFFIC SIDE OF THE PEDESTAL OR MAST ARM POLE.
3. ALL DAMPING DEVICES SHALL BE 18" TO 2' WIDE BY 4' IN LENGTH.

© TXDOT 2005

DALLAS DISTRICT STANDARD

FED. RD. DIV. NO.	FEDERAL AID PROJECT NO.		SHEET NO.
6			392
STATE	STATE DIST.	COUNTY	
TEXAS	18	COLLIN	
CONT.	SECT.	JOB	HIGHWAY NO.
0091	04	055	SH 289

TRAFFIC SIGNAL HEAD IDENTIFICATION

R-201104-01

SIGN R10-4bL
9" x 12"

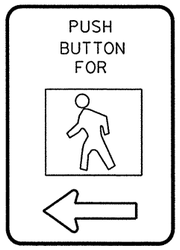

SIGN R10-4bR
9" x 12"

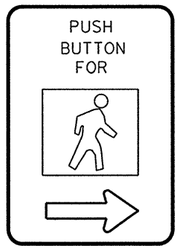

SIGN R10-4bRL
9" x 12"

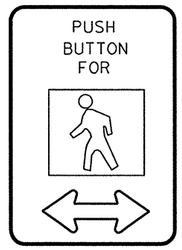

PEDESTRIAN PUSHBUTTON
SIGN DETAILS

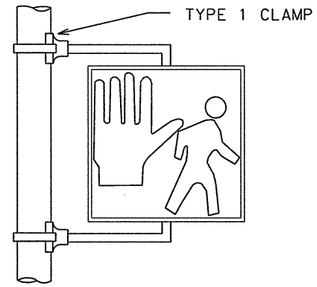

PEDESTRIAN SIGNAL HEAD MOUNTING
FOR ONE PEDESTRIAN SIGNAL HEAD
152A

NOTE:

THE POLES ON THIS DRAWING ARE SHOWN AS AN EXAMPLE ONLY. POLES OF SIMILAR DESIGN FOR ANY CROSS SECTION WHICH MEET THE SPECIFICATIONS AND REQUIREMENTS SHOWN ON THESE DRAWINGS AND ARE APPROVED BY THE ENGINEER WILL BE DEEMED ACCEPTABLE.

SIGN R10-3eL
9" X 15"

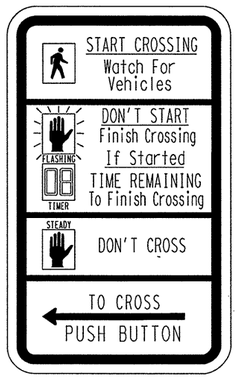

SIGN R10-3eR
9" X 15"

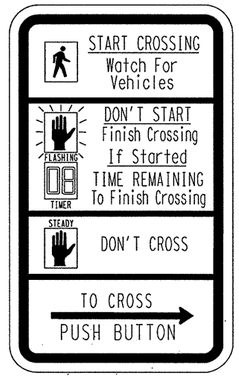

COUNTDOWN PEDESTRIAN PUSHBUTTON
SIGN DETAILS

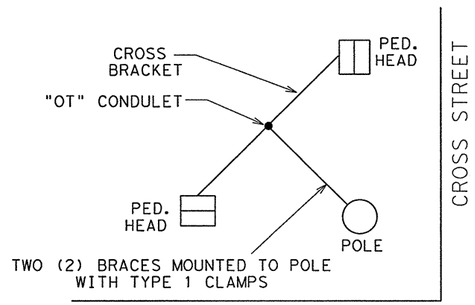

PEDESTRIAN SIGNAL HEAD MOUNTING
FOR TWO PEDESTRIAN SIGNAL HEADS
143C

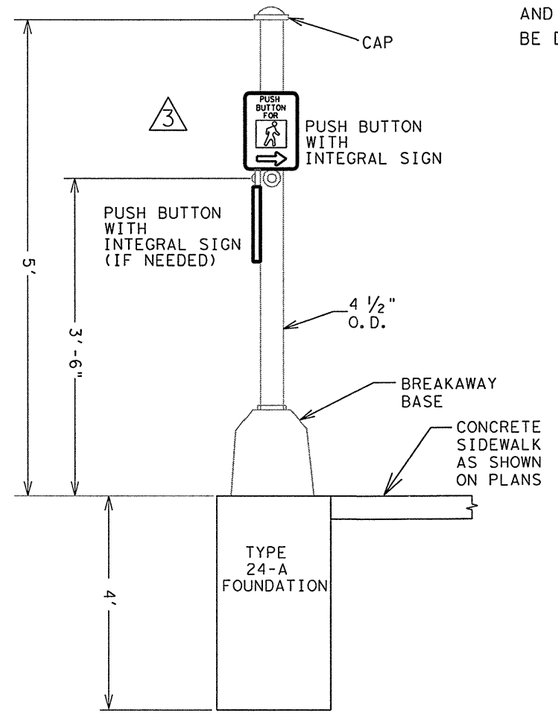

PEDESTRIAN PUSH BUTTON POLE

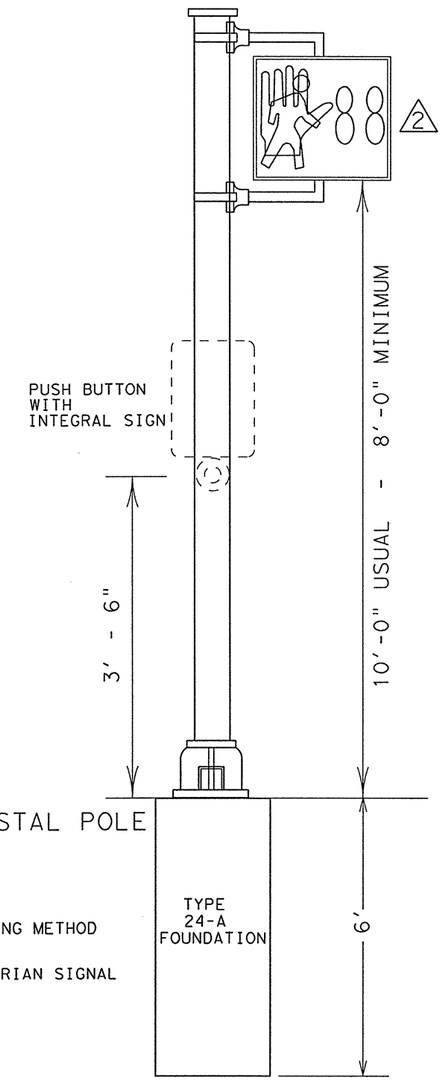

PEDESTAL POLE

NOTE: CLAM SHELL MOUNTING HARDWARE MAY BE USED INSTEAD OF MOUNTING HARDWARE SHOWN ABOVE, AS APPROVED BY THE ENGINEER.
ICC P/N 4805 OR McCAIN QUICKMOUNT OR APPROVED EQUAL.

NOTES:

1. PEDESTRIAN SIGNAL HEADS SHALL BE MOUNTED WITH TYPE 1 CLAMPS AND APPROPRIATE TUBING.
2. ALL PEDESTRIAN SIGNAL HEADS SHALL BE INSTALLED ON THE AWAY-FROM-TRAFFIC SIDE OF THE PEDESTAL OR MAST ARM POLE.
3. ALL WIRING FOR PEDESTRIAN SIGNALS SHALL BE TOTALLY ENCLOSED WITHIN THE SIGNAL MOUNTING HARDWARE.
4. ALL PEDESTRIAN SIGNAL HEADS AND PUSH BUTTON SIGNS SHALL DISPLAY THE SYMBOLIZED MESSAGES SHOWN ABOVE.

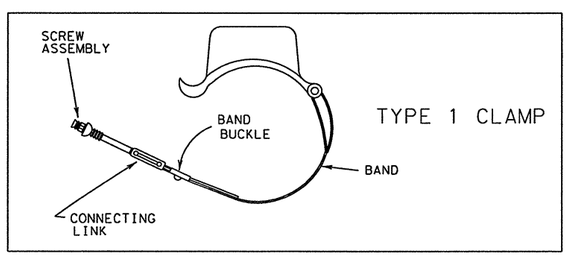

TYPE 1 CLAMP

1 ALTERNATIVE MOUNTING METHOD revised 12-92

2 ALTERNATIVE PEDESTRIAN SIGNAL HEAD AND SIGNING revised 10-08

3 PEDESTRIAN PUSH BUTTON POLE revised 01-11

DALLAS DISTRICT STANDARD

PEDESTRIAN SIGNAL HEAD IDENTIFICATION

FED. RD. DIV. NO.	PROJECT NO.		SHEET NO.
6	(SEE TITLE SHEET)		293
STATE	STATE DIST.	COUNTY	
TEXAS	DALLAS	COLLIN	
CONT.	SECT.	JOB	HIGHWAY NO.
0091	04	055	SH 289

R-201104-01

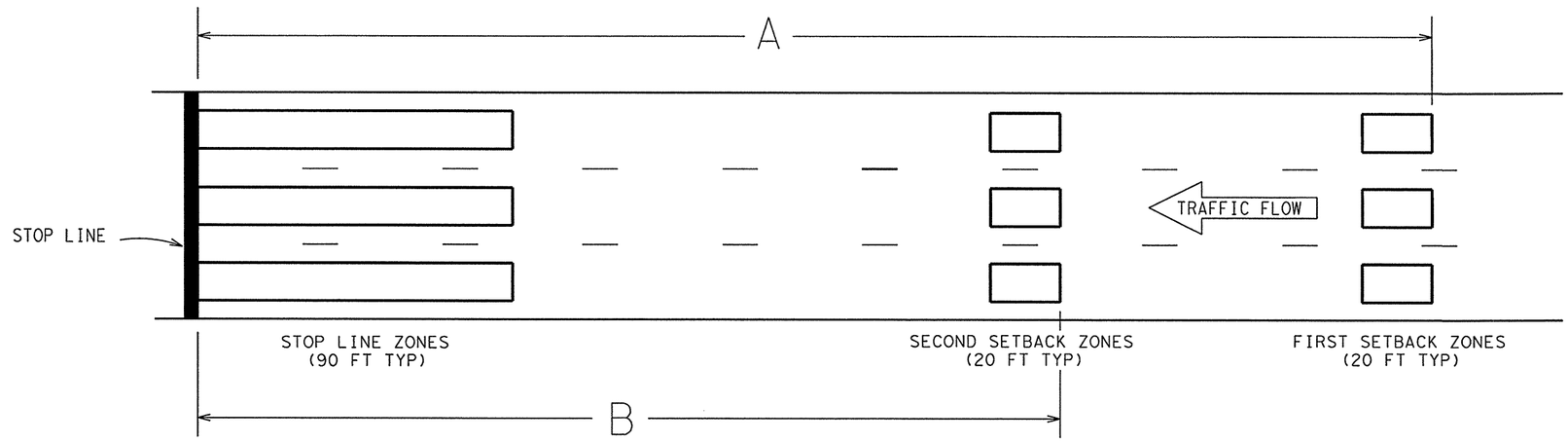

APPROACH SPEED LIMIT (MPH)	DISTANCE[2] BETWEEN CAMERA AND STOP LINE (FT)	DISTANCE[1] A (FT)	CAMERA HEIGHT (FT)									
			24	28	32	36	40	24	28	32	36	40
			DISTANCE B (FT)					EXTENSION ON 2ND DET. ZONE (SEC.)				
60	80	470	280	295	305	310	315	0.0	0.0	0.0	0.5	0.5
	150	470	270	285	295	300	310	0.0	0.0	0.0	0.0	0.5
55	80	430	255	265	275	280	285	0.0	0.0	0.0	0.5	0.5
	150	430	245	255	265	275	280	0.0	0.0	0.0	0.0	0.5
50	80	390	235	245	250	255	260	0.0	0.0	0.5	0.5	0.5
	150	390	220	230	240	245	250	0.0	0.0	0.0	0.0	0.5
45	80	350	210	215	220	225	230	0.0	0.0	0.5	0.5	0.5
	150	350	190	200	210	215	220	0.0	0.0	0.0	0.0	0.5

1. Distances shown are based on a 20′ detection zone and a 1.0 second passage time setting.
2. Distance between the camera and the stop line, as measured parallel to the direction of travel.

DALLAS DISTRICT STANDARD

Texas Department of Transportation
©2004
Dallas District

VIDEO DETECTION ZONE PLACEMENT

VDZ-04 (DAL)

©TxDOT September 2004

DWN: TxDOT	CKD: TxDOT	DWN: TxDOT	CKD: TxDOT

REVISIONS	FED. RD. DIV. NO.	FEDERAL AID PROJECT NO.		HIGHWAY NO.
	6	(SEE TITLE SHEET)		SH 289
	STATE	DISTRICT	COUNTY	SHEET NO.
	TEXAS	18	COLLIN	394
	CONTROL	SECTION	JOB	
	0091	04	055	

Arm Length	ROUND POLES					POLYGONAL POLES					Foundation Type
	D_B	D_{19}	D_{24}	D_{30}	① thk	D_B	D_{19}	D_{24}	D_{30}	① thk	
ft.	in.	in.	in.	in.	in.	in.	in.	in.	in.	in.	
20	10.5	7.8	7.1	6.3	.179	11.5	8.5	7.7	6.8	.179	30-A
24	11.0	8.3	7.6	6.8	.179	12.0	9.0	8.2	7.3	.179	30-A
28	11.5	8.8	8.1	7.3	.179	12.5	9.5	8.7	7.8	.179	30-A
32	12.5	9.8	9.1	8.3	.179	12.0	9.0	8.2	7.3	.239	30-A
36	12.0	9.3	8.6	7.8	.239	12.5	9.5	8.7	7.8	.239	36-A
40	12.0	9.3	8.6	7.8	.239	13.5	10.5	9.7	8.8	.239	36-A
44	12.5	9.8	9.1	8.3	.239	14.0	11.0	10.2	9.3	.239	36-A
48	13.0	10.3	9.6	8.8	.239	15.0	12.0	11.2	10.3	.239	36-A

Arm Length	ROUND ARMS					POLYGONAL ARMS				
	L_1	D_1	D_2	① thk	Rise	L_1	D_1	② D_2	① thk	Rise
ft.	ft.	in.	in.	in.		ft.	in.	in.	in.	
20	19.1	6.5	3.8	.179	1'-9"	19.1	7.0	3.5	.179	1'-8"
24	23.1	7.5	4.3	.179	1'-10"	23.1	7.5	3.5	.179	1'-9"
28	27.1	8.0	4.2	.179	1'-11"	27.1	8.0	3.5	.179	1'-10"
32	31.0	9.0	4.7	.179	2'-1"	31.0	9.0	3.5	.179	2'-0"
36	35.0	9.5	4.6	.179	2'-4"	35.0	10.0	3.5	.179	2'-1"
40	39.0	9.5	4.1	.239	2'-8"	39.0	9.5	3.5	.239	2'-3"
44	43.0	10.0	4.1	.239	2'-11"	43.0	10.0	3.5	.239	2'-6"
48	47.0	10.5	4.1	.239	3'-4"	47.0	11.0	3.5	.239	2'-9"

D_B = Pole Base O.D.
D_{19} = Pole Top O.D. with no Luminaire and no ILSN
D_{24} = Pole Top O.D. with ILSN w/out Luminaire
D_{30} = Pole Top O.D. with Luminaire
D_1 = Arm Base O.D.

D_2 = Arm End O.D.
L_1 = Shaft Length
L = Nominal Arm Length

① Thickness shown are minimums, thicker materials may be used.

② D_2 may be increased by up to 1" for polygonal arms.

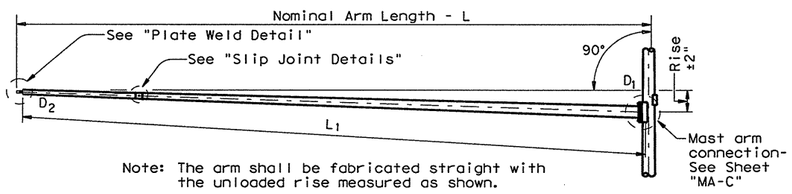

Note: The arm shall be fabricated straight with the unloaded rise measured as shown.

TRAFFIC SIGNAL ARM

(Fixed Mount)

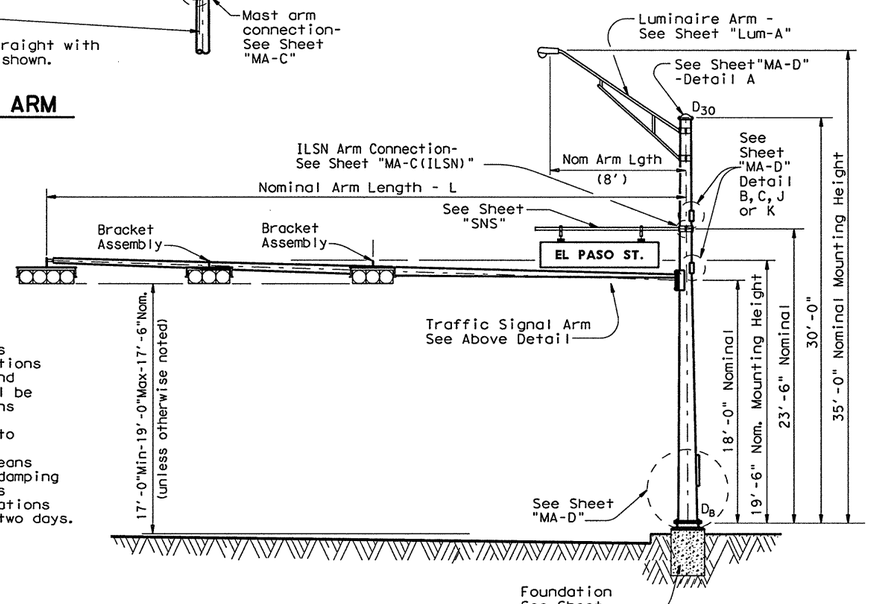

STRUCTURE ASSEMBLY

VIBRATION WARNING

Mast Arms of approximately 40' or longer are subject to possible harmonic vertical vibrations in light wind conditions due to unusual combinations of signal numbers, weights or positions, arm-wind orientation, and arm-pole stiffness. Arms shall be visually inspected in 5 to 20 mph wind conditions after signal head installation and, if vertical movements with a total excursion (max positive to max negative) of more than approximately 8" are observed at arm tip, damping devices or other means shall be fitted to the arm(s). The necessary damping device(s) or other remedial measures shall be as recommended by the fabricator. Excessive vibrations shall not be allowed to continue for more than two days.

SHIPPING PARTS LIST

Ship each pole with the following attached: enlarged hand hole, pole cap, fixed-arm connection bolts and washers and any additional hardware listed in the table.

Nominal Arm Length	30' Poles With Luminaire		24' Poles With ILSN		19' Poles With No Luminaire and No ILSN	
	Above hardware plus: One (or two if ILSN attached) small hand hole, clamp-on simplex		Above hardware plus one small hand hole		See note above	
ft	Designation	Quantity	Designation	Quantity	Designation	Quantity
20	20L-80		20S-80		20-80	
24	24L-80		24S-80		24-80	
28	28L-80		28S-80		28-80	
32	32L-80		32S-80		32-80	
36	36L-80		36S-80		36-80	
40	40L-80		40S-80		40-80	1
44	44L-80	1	44S-80		44-80	1
48	48L-80	2	48S-80		48-80	1

Traffic Signal Arms (1 per Pole) Ship each arm with the listed equipment attached

Nominal Arm Length	Type I Arm (1 Signal)		Type II Arm (2 Signals)		Type III Arm (3 Signals)	
	1 Bracket Assembly		2 Bracket Assemblies		3 Bracket Assemblies	
ft	Designation	Quantity	Designation	Quantity	Designation	Quantity
20	20I-80					
24	24I-80		24II-80			
28	28I-80		28II-80			
32			32II-80		32III-80	
36			36II-80		36III-80	
40			40II-80	1	40III-80	
44			44II-80	2	44III-80	
48			48II-80	1	48III-80	2

Luminaire Arms (1 per 30' pole)

Nominal Arm Length	Quantity
8' Arm	3

ILSN Arm (Max. 2 per pole) Ship with clamps, bolts and washers

Nominal Arm Length	Quantity
7' Arm	
9' Arm	

Anchor Bolt Assemblies (1 per pole)

Anchor Bolt Diameter	Anchor Bolt Length	Quantity
¾"	1'-6"	8
1 ½"	3'-4"	
1 ¾"	3'-10"	6

Each anchor bolt assembly consists of the following: Top and Bottom templates, 4 anchor bolts, 8 nuts, 8 flat washers, 4 lock washers and 4 nut anchor devices (Type 2) per Standard Drawing "TS-FD".

Templates may be removed for shipment.

MODIFICATIONS

Ⓐ REMOVED BRACKET ASSEMBLY OPTIONS A AND B

Ⓑ REMOVED CGB CONNECTORS

Ⓒ REMOVED TENON DETAIL

Ⓓ REQUIRE MEASUREMENT OF POLE HEIGHT

Ⓔ MIN. AND MAX. SIGNAL HEAD HEIGHT DISTANCE

11/99 Revision

△1 Changed to Facilitate new terminal strip enclosure

SHEET 1 OF 2

Texas Department of Transportation

TRAFFIC SIGNAL SUPPORT STRUCTURES

SINGLE MAST ARM ASSEMBLY

(80 MPH WIND ZONE)

SMA-80(1)-99 (DAL)

FILE: SMA-80.DGN	DN: TxDOT	CK: TxDOT	DW: TxDOT	CK: TxDOT
© TxDOT 2001	DIST	FED REG	FEDERAL AID PROJECT NO. •	SHEET
REVISIONS 5-96 11-99	18	6	(SEE TITLE SHEET)	395

COUNTY	CONTROL	SECT	JOB	HIGHWAY
COLLIN	0091	04	055	SH 289

122A

DISCLAIMER:
The use of this standard is governed by the "Texas Engineering Practice Act". No warranty of any kind is made by TxDOT for any purpose whatsoever. TxDOT assumes no responsibility for the conversion of this standard to other formats or for incorrect results or damages resulting from its use.

LEVEL 1 2 3 4 5 6 7 / 17 18 19 / 33 34 35 / 49 50 51 52 53 54 55 56 57 58 59 60 61 62 63
LAYED 1 2 3 4 5 6 7 8 9 10 11 12 13 14 15 16 / 27 28 29 30 31 32 / 41 42 43 44 45 46 47 48
ACC: d48hplq:/usr/d482517
LV=1,2 for English 1,3 for Metric

R-201104-01

Stainless steel bands and cast bracket as in "Astro-Brac" with 1½" Dia Threaded Coupling.

BRACKET ASSEMBLY OPTION C

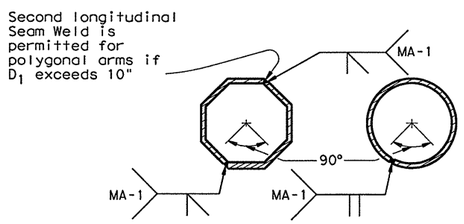

Longitudinal Seam Weld must be oriented within the lower 90° of the signal arm.

ARM WELD DETAIL

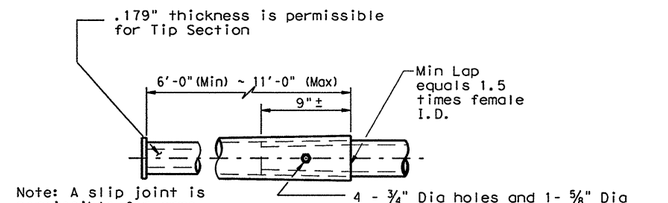

Note: A slip joint is permissible for arms 40' and greater in length. The slip joint shall be made in the shop, but may be match marked and shipped disassembled.

SLIP JOINT DETAIL

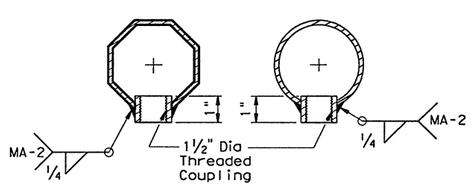

COUPLING DETAILS

NOTE:

Pole manufacturer shall drill ½" hole in bottom of mast arm at end plate. (for hot-dip galvanizing)

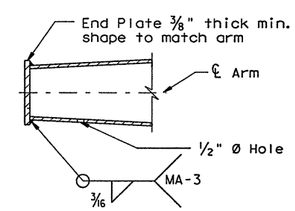

PLATE WELD DETAIL

GENERAL NOTES:

Design conforms to 1994 AASHTO Standard Specifications for Structural Supports for Highway Signs, Luminaires, and Traffic Signals and Interim Specifications thereto. Design Wind Speed equals 80 mph plus a 1.3 gust factor.

Poles are designed to support one 8'-0" luminaire arm, one 9'-0" internally lighted street name sign and one traffic signal arm with a length as tabulated. The specified luminaire load applied at the end of the luminaire arm equals 75 lbs vertical dead load plus the horizontal wind load on an effective projected area of 1.5 sq ft. The specified internally lighted street name sign load applied 4.5 ft from the centerline of the pole equals 85 lbs vertical dead load plus horizontal wind load on an effective projected area of 11.5 sq ft. The specified signal load applied at the end of the traffic signal arm equals 180 lbs vertical dead load plus the horizontal wind load on an effective projected area of 32.4 sq ft (actual area times drag coefficient).

See Standard Sheet "MA-D" for pole details, "MA-C" for traffic signal arm connection details, "MA-C (ILSN)" for internally lighted street name sign arm connection details, "LUM-A" for luminaire arm and connection details, "SNS" for internally lighted street name sign details, and "TS-FD" for anchor bolt and foundation details. See "MA-C" for material specifications.

Fabrication shall be in accordance with the Specifications and with the details, dimensions, and weld procedures shown herein. Weld references call for preapproved weld procedures which the Fabricator must obtain prior to fabrication. Miscellaneous welds which do not call for preapproved weld procedures are nevertheless subject to rejection for poor workmanship. Materials, fabrication tolerances, and shipping practices shall meet the requirements of this sheet and the Specifications.

Unless otherwise noted, all parts shall be galvanized in accordance with the Specifications.

Special design require submission of shop drawings in accordance with the item "Steel Structures".

△ The pole heights are for bidding purposes only. Prior to fabrication, the Contractor in cooperation with the Engineer shall make field measurements to determine the actual pole height necessary to ensure a verticle clearance of 17'-6" min., 19' max.

DISCLAIMER:
The use of this standard is governed by the "Texas Engineering Practice Act". No warranty of any kind is made by TxDOT for any purpose whatsoever. TxDOT assumes no responsibility for the conversion of this standard to other formats or for incorrect results or damages resulting from its use.

LEVELS 1 2 3 4 5 6 7 8 9 10 11 12 13 14 15 16 17 18 19 20 21 22 23 24 25 26 27 28 29 30 31 32 33 34 35 36 37 38 39 40 41 42 43 44 45 46 47 48 49 50 51 52 53 54 55 56 57 58 59 60 61 62 63

ACC: d48hplq:/usr/d482517

LV=1,2 for English 1,3 for Metric

SHEET 2 OF 2

Texas Department of Transportation

TRAFFIC SIGNAL SUPPORT STRUCTURES

SINGLE MAST ARM ASSEMBLY

(80 MPH WIND ZONE)

SMA-80(2)-96 (DAL)

FILE: SMA-80.DGN	DN: TxDOT	CK: TxDOT	DW: TxDOT	CK: TxDOT		
© TxDOT 2006	DISTRICT	FED REG	FEDERAL AID PROJECT NO.		SHEET	
REVISIONS	DALLAS	6	(SEE TITLE SHEET)		396	
6-96	COUNTY		CONTROL	SECT	JOB	HIGHWAY
	COLLIN		0091	04	055	SH 289

DALLAS DISTRICT STANDARD

R-201104-01

DISCLAIMER: The use of this standard is governed by the "Texas Engineering Practice Act". No warranty of any kind is made by TxDOT for any purpose whatsoever. TxDOT assumes no responsibility for the conversion of this standard to other formats or for incorrect results or damages resulting from its use.

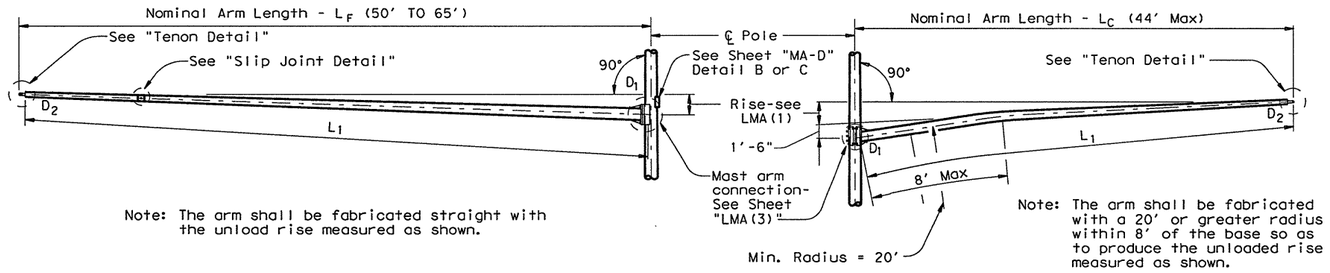

Note: The arm shall be fabricated straight with the unload rise measured as shown.

Note: The arm shall be fabricated with a 20' or greater radius within 8' of the base so as to produce the unloaded rise measured as shown.

FIXED MOUNT TRAFFIC SIGNAL ARM

CLAMP-ON TRAFFIC SIGNAL ARM

(If required, See DMA-80 or DMA-100 Standard Sheets for Clamp-on Arm Details)

Design also conforms to NCHRP Report 412 for fatigue resistance except that there are no stiffeners at the base plate. TxDOT is conducting tests to determine if stiffeners at the base plate will or will not result in optimal performance; depending upon the results of the tests, poles may need a retrofit to ensure optimal fatigue performance.

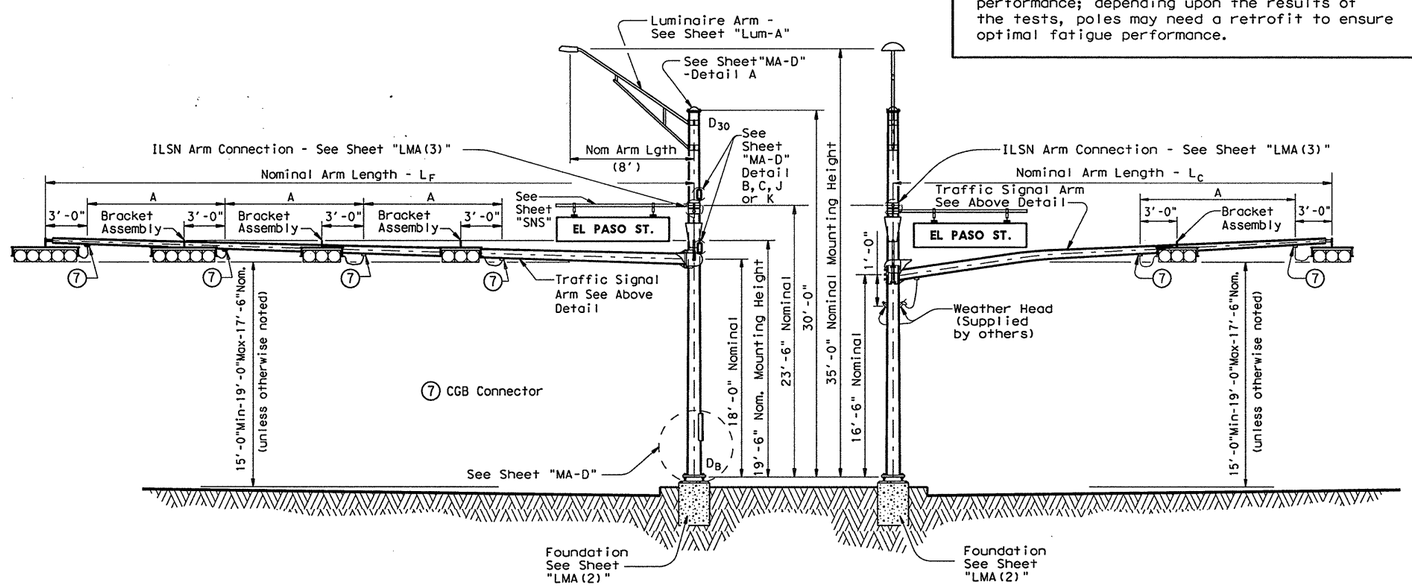

ELEVATION
(Showing fixed mount arm)

STRUCTURE ASSEMBLY

ELEVATION
(Showing clamp mount arm)

TABLE OF DIMENSIONS "A"										
Arm Length	24'	28'	32'	36'	40'	44'	50'	55'	60'	65'
Arm Type II	10'	11'	12'	13'						
Arm Type III			10'	11'	12'	12'				
Arm Type IV							12'	12'	12'	12'

VIBRATION WARNING

Mast Arms of approximately 40'-0" or longer are subject to possible harmonic vertical vibrations in light wind conditions due to unusual combinations of signal numbers, weights or positions, arm-wind orientation, and arm-pole stiffness.

Arms shall be visually inspected in 5 to 20 mph wind conditions after signal head installation and, if vertical movements with a total excursion (max positive to max negative) of more than approximately 8" are observed at arm tip, damping devices or other means shall be fitted to the arm(s).

The necessary damping device(s) or other remedial measures shall be as recommended by the fabricator. Excessive vibrations shall not be allowed to continue for more than two days.

If damping plate is used, the size shall be 16" x 66". The plate must be installed directly above traffic light located nearest the free end.

GENERAL NOTES:

Design conforms to 1994 AASHTO Standard Specifications for Structural Supports for Highway Signs, Luminaires, and Traffic Signals and Interim Specifications thereto. Design Wind Speed can be either 100 mph or 80 mph plus a 1.3 gust factor. If clamp-on traffic signal is required, designs are based on an arm included angle of 90 degrees or more. Angles of less than approximately 75 degrees will require a special design.

Poles are designed to support one 8'-0" luminaire arm, two 9'-0" internally lighted street name signs and two traffic signal arms with limited length combinations. The specified luminaire load applied at the end of luminaire arm equals 75 lbs vertical dead load plus the horizontal wind load on an effective projected area of 1.5 sq ft. The specified internally lighted street name sign applied 4'-6" from the centerline of the pole equals 85 lbs vertical dead load plus the horizontal wind load on an effective projected area of 11.5 sq ft. For 50 ft. to 65 ft. fixed-mount mast arm the specified signal load applied at the end of the traffic signal arm equals 310 lbs vertical dead load plus the horizontal wind load on an effective projected area of 52.0 sq ft. (actual area times drag coefficient). For clamp-on mast arm, the specified signal load applied at the end of the traffic signal arms equals 180 lbs vertical dead load plus the horizontal wind load on an effective projected area of 32.4 sq ft. (actual area times drag cofficient).

Except as noted in sheets 1 thru 3 of 3, also refer to Standard Sheet "MA-D" for pole details, "LUM-A for luminaire arm and connection details, "SNS" for internally lighted street name sign details, and "TS-FD" for anchor bolt and foundation details.

Fabrication shall be in accordance with the Specifications and with the details, dimensions, and weld procedures shown herein. Weld references call for preapproved weld procedures which the Fabricator must obtain prior to fabrication. Miscellaneous welds which do not call for preapproved weld procedures are nevertheless subject to rejection for poor workmanship. Material, fabrication tolerances, and shipping practices shall meet the requirements of this sheet and the Specifications.

Unless otherwise noted, all parts shall be galvanized in accordance with the Specifications.

Special designs require submission of shop drawings in accordance with the item "Steel Structures".

Texas Department of Transportation
Traffic Operations Division

TRAFFIC SIGNAL SUPPORT STRUCTURES
LONG MAST ARM ASSEMBLY (50 TO 65 FT) (80 AND 100 MPH WIND ZONE)

Sheet 1 of 4 LMA(1)-01

©TxDOT July 2000

DN: TXDOT	CK: TXDOT	DW: TXDOT	CK: TXDOT

REVISIONS 4-20-01

CONT	SECT	JOB	HIGHWAY
0091	04	055	SH 289
DIST		COUNTY	SHEET NO.
18		COLLIN	397

DATE: 4/4/2011 8:16:21 AM
FILE: U:\US 289, 0091-04-055\LMA.dgn

DISCLAIMER: The use of this standard is governed by the "Texas Engineering Practice Act". No warranty of any kind is made by TxDOT for any purpose whatsoever. TxDOT assumes no responsibility for the conversion of this standard to other formats or for incorrect results or damages resulting from its use.

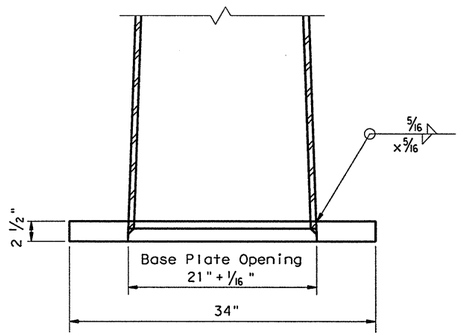

POLE CONNECTION TO BASE PLATE

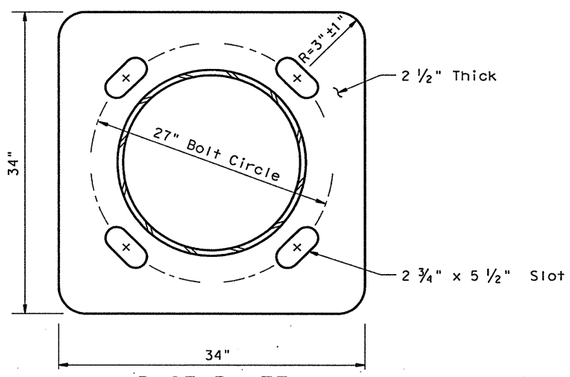

BASE PLATE

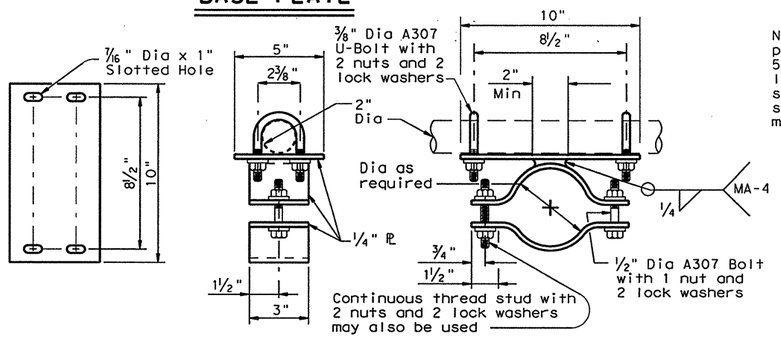

BRACKET ASSEMBLY DETAILS OPTION A

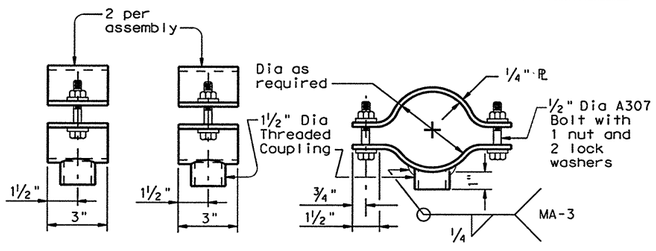

BRACKET ASSEMBLY DETAILS OPTION B

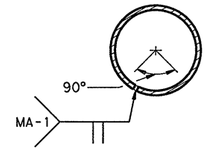

Longitudinal Seam Weld must be oriented within the lower 90° of the signal arm.

ARM WELD DETAIL

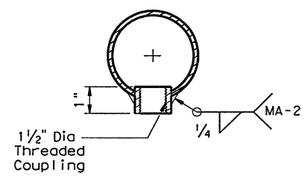

COUPLING DETAIL

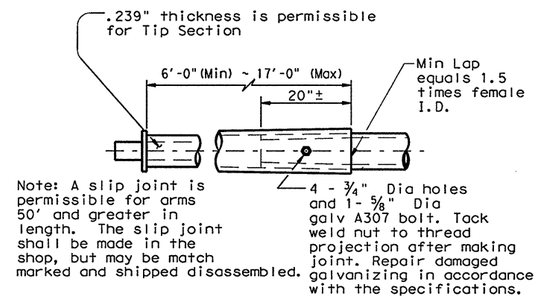

Note: A slip joint is permissible for arms 50' and greater in length. The slip joint shall be made in the shop, but may be match marked and shipped disassembled.

SLIP JOINT DETAIL

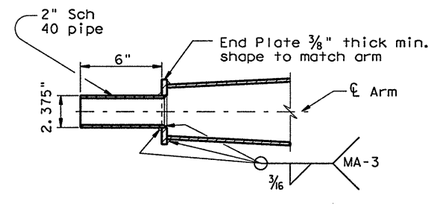

TENON DETAIL

Stainless steel bands and cast bracket as in "Astro-Brac" with 1 1/2" Dia Threaded Coupling.

BRACKET ASSEMBLY OPTION C

Arm Length	ROUND POLES					Foundation Type
	D_B	D_{19}	D_{24}	D_{30}	(1) thk	
ft.	in.	in.	in.	in.	in.	
50', 55' 60', 65'	21.0	18.3	17.6	16.8	.3125	48-A

Arm Length	ROUND ARMS				
	L_1	D_1	D_2	(1) thk	Rise (±2")
ft.	ft.	in.	in.	in.	
50	49	18.5	11.7	.3125	3'- 3"
55	54	18.5	11.0	.3125	3'- 7"
60	59	18.5	10.3	.3125	3'-11"
65	64	18.5	9.6	.3125	4'- 4"

D_B = Pole Base O.D.
D_{19} = Pole Top O.D. with no Luminaire and no ILSN
D_{24} = Pole Top O.D. with ILSN w/out Luminaire
D_{30} = Pole Top O.D. with Luminaire
D_1 = Arm Base O.D.
D_2 = Arm End O.D.
L_1 = Shaft Length
L = Nominal Arm Length

(1) Thickness shown is minimum, thicker materials may be used.

ANCHOR BOLT & TEMPLATE SIZE						
Bolt Dia in	Length ‡	Top Thread	Bottom Thread	Bolt Circle	R_2	R_1
2 1/2"	5'-3"	10"	3"	27"	16"	11"

‡ Min dimension given, longer bolts are acceptable.

(1) Anchor bolt design develops the foundation capacity given under Foundation Design Loads.

(2) Foundation Design Loads are the allowable moments and shears at the base of the structure.

(3) Field Penetrometer readings at a depth of approximately 3 to 5 feet may be used to adjust shaft lengths.

(4) If rock is encountered, the Drilled Shaft shall extend a minimum of two diameters into solid rock.

(5) Decimal lengths in Design Table are to allow interpolation for other penetrometer values. Round to nearest foot for entry into Summary Table.

FOUNDATION DESIGN TABLE													
FDN TYPE	DRILLED SHAFT DIA	REINFORCING STEEL		DRILLED SHAFT LENGTH-ft (3), (4), (5)			ANCHOR BOLT DESIGN (1)				FOUNDATION DESIGN LOAD (2)		TYPICAL APPLICATION
		VERT BARS	SPIRAL & PITCH	TEXAS CONE PENETROMETER N blows/ft			ANCHOR BOLT DIA	Fy (ksi)	BOLT CIR DIA	ANCHOR TYPE	MOMENT K-ft	SHEAR Kips	
				10	15	40							
48-A	48"	20 #9	#4 at 6"	21.9	19.5	14.7	2 1/2"	55	27"	2	490	10	Mast arm assembly.

SEE SHEET "TS-FD" FOR ADDITIONAL DETAILS.

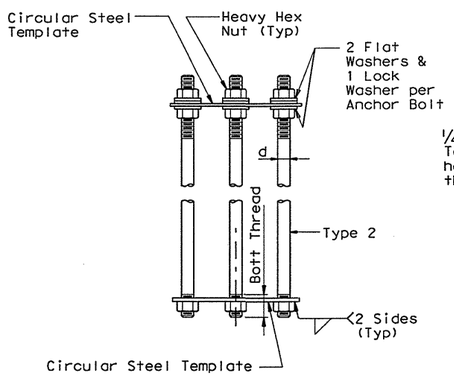

NUT ANCHOR (TYPE 2)

ANCHOR BOLT ASSEMBLY

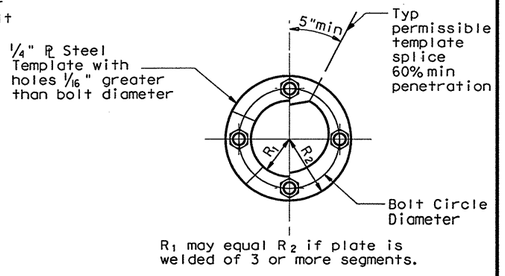

TEMPLATE DETAIL

Texas Department of Transportation
Traffic Operations Division

TRAFFIC SIGNAL SUPPORT STRUCTURES
LONG MAST ARM ASSEMBLY (50 TO 65 FT) (80 AND 100 MPH WIND ZONE)

Sheet 2 of 4 LMA(2)-01

©TxDOT July 2000

DN: TXDOT	CK: TXDOT	DW: TXDOT	CK: TXDOT
4-20-01 REVISIONS			

CONT	SECT	JOB	HIGHWAY
0091	04	055	SH 289
DIST		COUNTY	SHEET NO.
18		COLLIN	398

131R

DATE: 4/4/2011 8:16:23 AM
FILE: U:\US 289, 0091-04-055\LMA.dgn

R-201104-01

DISCLAIMER: The use of this standard is governed by the "Texas Engineering Practice Act". No warranty of any kind is made by TxDOT for any purpose whatsoever. TxDOT assumes no responsibility for the conversion of this standard to other formats or for incorrect results or damages resulting from its use.

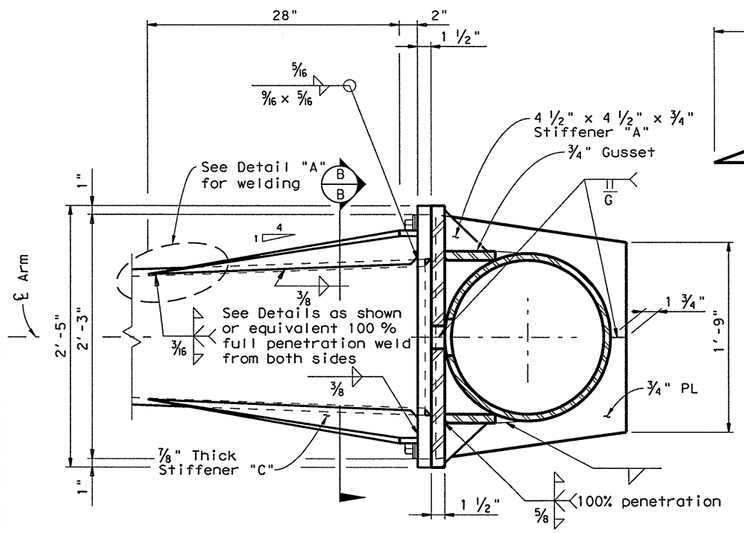

SECTION A-A

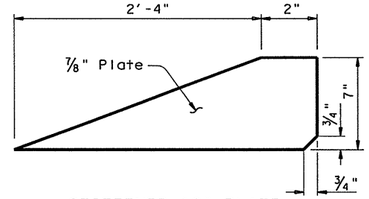

STIFFENER "C" PLATE

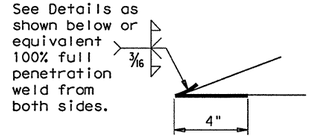

Only 4" length at tip of Stiffener "C" requires full penetration weld. Smooth weld radius to connect Stiffener . Others only require fillet weld.

DETAIL "A"

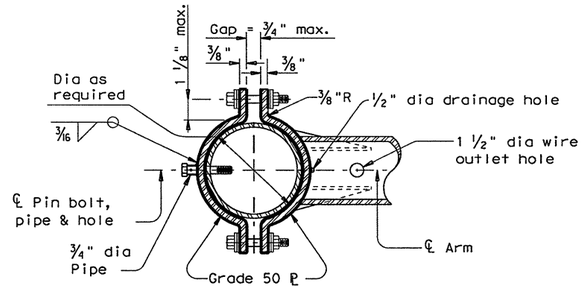

SECTION C-C

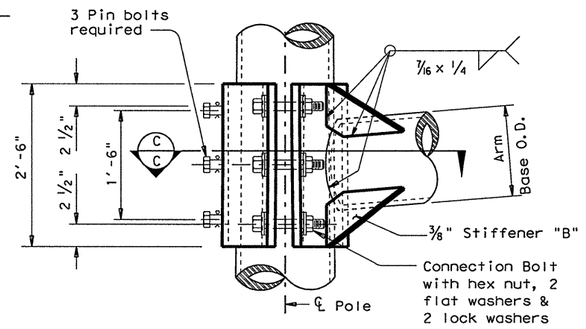

ELEVATION

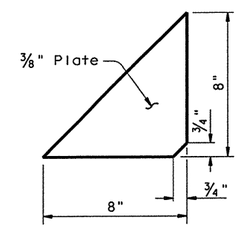

STIFFENER "B" PLATE

MATERIALS	
Round Shafts or Polygonal Shafts	ASTM A595 GR A, ASTM A570 GR 50, ASTM A607 GR 50, ASTM A572 GR 50 or A36M50
Plates (1)	ASTM A36 OR A572 GR 50 or A595(2) or A36M50
Connection Bolts	ASTM A325 except where noted
Pin Bolts	ASTM A325
Pipe	ASTM A53 GR A or B, or A501
Misc. Hardware	Galvanized steel or stainless steel or as noted

(1) Any of the materials listed for plates may be used where the drawings do not specify a particular Grade designation.

(2) If A595 material is used, it need not be cold worked to A595 requirments, but material must have 40 ksi minimum yield prior to fabrication.

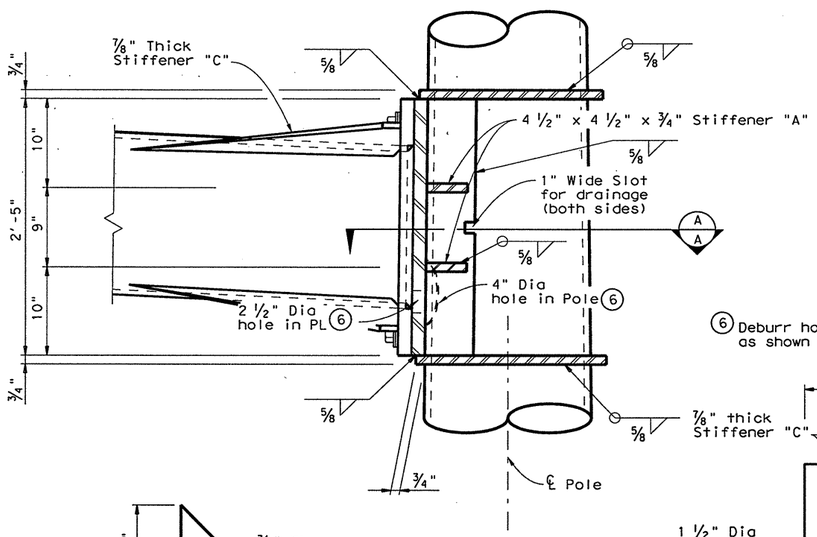

ELEVATION

6 Deburr holes and offset as shown for drainage

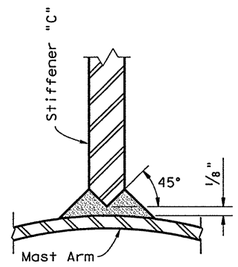

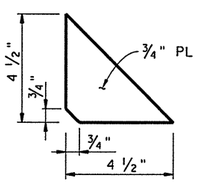

STIFFENER "A" PLATE

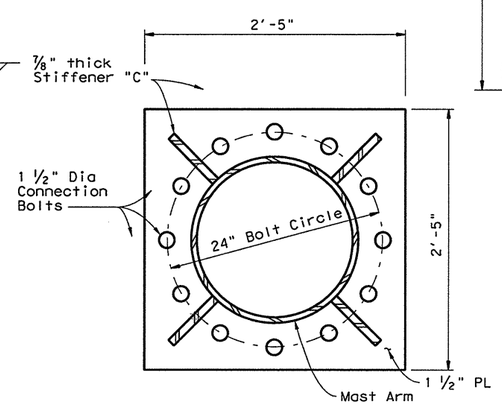

SECTION B-B

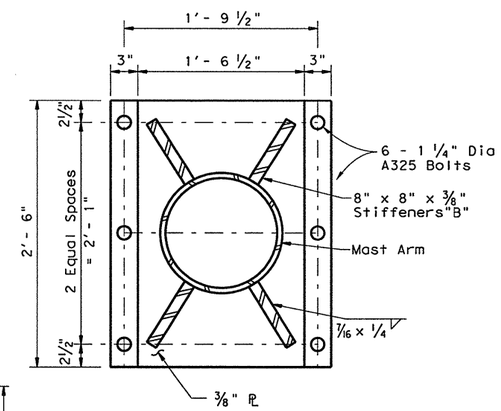

MAST ARM AND ILSN ARM TO POLE

CLAMP-ON DETAIL

GENERAL NOTES:

Clamp-on details are used for the second arm on dual mast arm assemblies. A Maximum 1 ½" wide vertical slotted hole may be cut in the front clamp plate to facilitate drainage during galvanizing. THe slot shall be centered behind the arm and shall be no longer than the arm diameter minus 1".

Fixed mount details are used for single mast arm assemblies and for the first arm on dual mast assemblies.

Where duplicate parts occur on a detail, welds shown for one part shall apply to all similar parts on the detail.

Pin bolts are required to prevent rotation of clamp-on arms under design wind forces.

Texas Department of Transportation
Traffic Operations Division

TRAFFIC SIGNAL SUPPORT STRUCTURES
LONG MAST ARM ASSEMBLY (50 TO 65 FT) (80 AND 100 MPH WIND ZONE)

Sheet 3 of 4

LMA(3)-01

©TxDOT July 2000

DN: TXDOT	CK: TXDOT	DW: TXDOT	CK: TXDOT
4-20-01 REVISIONS			

CONT	SECT	JOB	HIGHWAY
0091	04	055	SH 289

DIST	COUNTY	SHEET NO.
18	COLLIN	399

DATE: 4/4/2011 8:16:29 AM
FILE: U:\US 289, 0091-04-055\LMA.dgn

1310

DISCLAIMER: The use of this standard is governed by the "Texas Engineering Practice Act". No warranty of any kind is made by TxDOT for any purpose whatsoever. TxDOT assumes no responsibility for the conversion of this standard to other formats or for incorrect results or damages resulting from its use.

Shipping Parts List

Ship each pole with the following attached: enlarged hand hole, pole cap, fixed arm connection bolts and washers, and any additional hardware listed in the table.

Nominal Arm Length	30' Poles with Luminaire		24' Poles with ILSN		19' Poles with no Luminaire and no ILSN	
	See note above plus: one (or two if ILSN attached) small hand hole, clamp-on simplex		See note above plus one small hand hole		See note above	
Single Mast Arm						
Lf ft.	Designation	Quantity	Designation	Quantity	Designation	Quantity
50	50L		50S		50	
55	55L		55S		55	
60	60L	1	60S		60	
65	65L	1	65S		65	

Dual Mast Arm

Lf ft.	Lc ft.	Designation	Quantity	Designation	Quantity	Designation	Quantity
50	20	5020L		5020S		5020	
	24	5024L		5024S		5024	
	28	5028L		5028S		5028	
	32	5032L		5032S		5032	
	36	5036L		5036S		5036	
	40	5040L		5040S		5040	
	44	5044L		5044S		5044	
55	20	5520L		5520S		5520	
	24	5524L		5524S		5524	
	28	5528L		5528S		5528	
	32	5532L		5532S		5532	
	36	5536L		5536S		5536	
	40	5540L		5540S		5540	
	44	5544L		5544S		5544	
60	20	6020L		6020S		6020	
	24	6024L		6024S		6024	
	28	6028L		6028S		6028	
	32	6032L		6032S		6032	
	36	6036L		6036S		6036	
	40	6040L		6040S		6040	
	44	6044L		6044S		6044	
65	20	6520L		6520S		6520	
	24	6524L		6524S		6524	
	28	6528L		6528S		6528	
	32	6532L		6532S		6532	
	36	6536L		6536S		6536	
	40	6540L		6540S		6540	
	44	6544L		6544S		6544	

Shipping Parts List

Traffic Signal Arms (Fixed Mount) (1 per pole)
Ship each arm with listed equipment attached

Nominal Arm Length	Type IV Arm (4 Signals) * 3 Bracket Assembly * and 4 CGB Connectors	
ft.	Designation	Quantity
50	50IV	
55	55IV	
60	60III @@	1
65	65III @@	1

@@TYPE III ARM (3 SIGNALS)

Luminaire Arms (1 per 30' pole)

Nominal Arm Length	Quantity
8' Arm	2

ILSN Arm (Max. 2 per pole) Ship with clamps, bolts and washers

Nominal Arm Length	Quantity
7' Arm	
9' Arm	

Traffic Signal Arms (80 MPH Clamp-On Mount) (1 per pole) Ship each arm with listed equipment attached

Nominal Arm Length	Type I Arm (1 Signal) 2 CGB connector and 1 clamp w/bolts and washers		Type II Arm (2 Signals) * 1 Bracket Assembly * and 3 CGB connectors, and 1 clamp w/bolts and washers		Type III Arm (3 Signals) * 2 Bracket Assembly * and 4 CGB connectors, and 1 clamp w/bolts and washers	
ft.	Designation	Quantity	Designation	Quantity	Designation	Quantity
20	20I-80					
24	24I-80		24II-80			
28	28I-80		28II-80			
32			32II-80		32III-80	
36			36II-80		36III-80	
40					40III-80	
44					44III-80	

Traffic Signal Arms (100 MPH Clamp-On Mount) (1 per pole) Ship each arm with listed equipment attached

Nominal Arm Length	Type I Arm (1 Signal) 2 CGB connector and 1 clamp w/bolts and washers		Type II Arm (2 Signals) * 1 Bracket Assembly * and 3 CGB connectors, and 1 clamp w/bolts and washers		Type III Arm (3 Signals) * 2 Bracket Assembly * and 4 CGB connectors, and 1 clamp w/bolts and washers	
ft.	Designation	Quantity	Designation	Quantity	Designation	Quantity
20	20I-100					
24	24I-100		24II-100			
28	28I-100		28II-100			
32			32II-100		32III-100	
36			36II-100		36III-100	
40					40III-100	
44					44III-100	

Anchor Bolt Assemblies (1 per pole)

Anchor Bolt Diameter	Anchor Bolt Length	Quantity
2 1/2 "	5' - 3"	2

Each anchor bolt assembly consists of the following: Top and bottom templates, 4 anchor bolts, 8 nuts, 8 flat washers, 4 lock washers and 4 nut anchor devices (type 2) per Standard Drawing "TS-FD".
Templates may be removed for shipment.

Foundation Summary Table **

Location Ident.	Avg. N Blow/ft.	No. Each	Drill Shaft *** Length (feet)
			48-A
SH 289 @ FM 455			
P3	10	1	22
P7	10	1	22
Total Drill Shaft Length			44

Notes

* Supply Option "A" unless otherwise noted

** Foundations may be listed separately or grouped according to similarity of location and type. Quantities are for the Contractor's information only.

*** Decimal lengths in Design Table are to allow interpolation for other penetrometer values. Round to nearest foot for entry into Summary Table.

Abbreviations

Lf= Fixed Arm Length

Lc= Clamp-on Arm Length (44' Max.)

Texas Department of Transportation
Traffic Operations Division

LONG MAST ARM ASSEMBLY PARTS LIST

Sheet 4 of 4 LMA(4)-01

©TxDOT November 2000

DN: TXDOT	CK: TXDOT	DW: TXDOT	CK: TXDOT

4-20-01 REVISIONS

CONT	SECT	JOB	HIGHWAY
0091	04	055	SH 289
DIST		COUNTY	SHEET NO.
18		COLLIN	400

DATE: 4/4/2011 8:16:26 AM
FILE: U:\US 289, 0091-04-055\LMA.dgn

13101

R-201104-01

DISCLAIMER: The use of this standard is governed by the "Texas Engineering Practice Act". No warranty of any kind is made by TxDOT for any purpose whatsoever. TxDOT assumes no responsibility for the conversion of this standard to other formats or for incorrect results or damages resulting from its use.

ARM SIZE D_1	‡	A	B	C	D	E	CONN BOLT DIA
in.	in.	in.	in.	in.	in.	in.	in.
6.5	.179	12	9	9	6	1 ¾	1
7.5	.179	13	9	10	6	1 ¾	1
8.0	.179	14	10	11	7	2	1 ¼
9.0	.179	16	11	13	8	2	1 ¼
9.5	.179	17	12	14	9	2	1 ¼
9.5	.239	18	12	15	9	2	1 ¼
10.0	.239	18	12	15	9	2	1 ¼
10.5	.239	18	13	15	10	3	1 ½
11.0	.239	18	13	15	10	3	1 ½

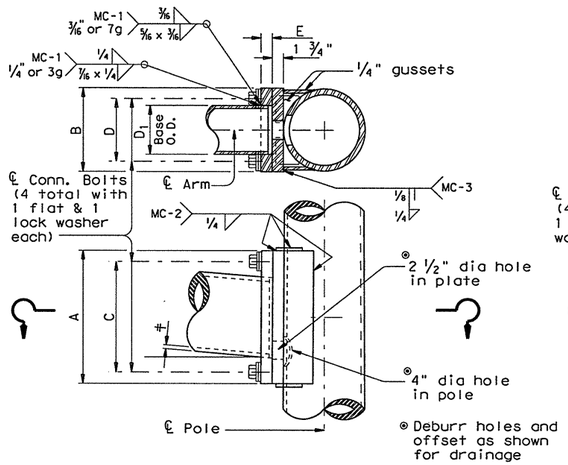

FIXED MOUNT DETAIL 1

ARM SIZE D_1	‡	A	F	CONN. BOLTS No.	CONN. BOLTS Dia	PIN BOLTS No.	PIN BOLTS Dia
in.	in.	in.	in.	ea.	in.	ea.	in.
6.5	.179	12	8	4	* ⅞	2	⅝
7.5	.179	14	8	4	1	2	⅝
8.0	.179	14	8	4	1	2	⅝
9.0	.179	16	10	4	1	2	⅝
9.5	.179	18	12	4	1 ¼	3	⅝
9.5	.239	18	12	4	1 ¼	3	⅝
10.0	.239	18	12	4	1 ¼	3	⅝

*1" Dia connection bolts are permissible

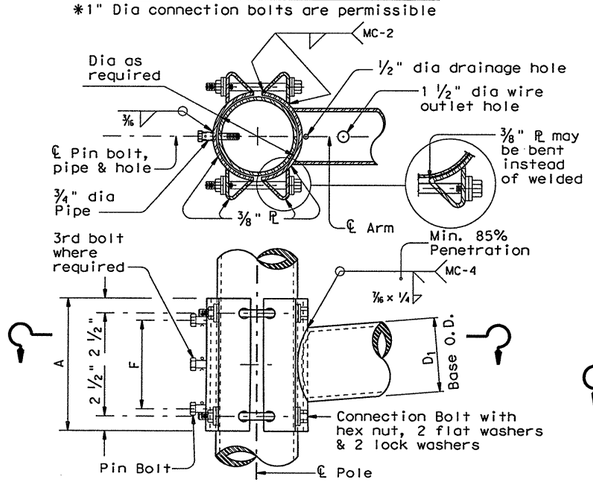

CLAMP-ON DETAIL 1

ARM SIZE D_1	‡	A	B	C	D	E	CONN BOLT DIA
in.	in.	in.	in.	in.	in.	in.	in.
7.0	.179	11	11	8	8	1 ¾	1 ¼
7.5	.179	11	11	8	8	1 ¾	1 ¼
8.0	.179	11	11	8	8	2	1 ¼
9.0	.179	13	13	10	10	2	1 ¼
10.0	.179	13	13	10	10	2	1 ¼
9.5	.239	13	13	10	10	2	1 ¼
10.0	.239	14	14	11	11	2	1 ½
11.0	.239	14	14	11	11	3	1 ½
11.5	.239	14	14	11	11	3	1 ½

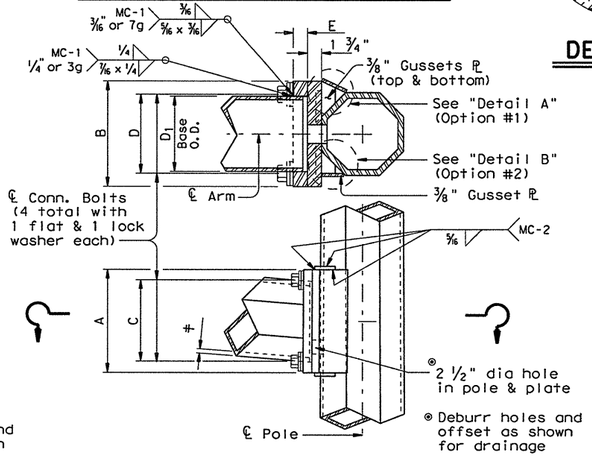

FIXED MOUNT DETAIL 2

ARM SIZE D_1	‡	A	F	T	CONN. BOLTS No.	CONN. BOLTS Dia	PIN BOLTS No.	PIN BOLTS Dia
in.	in.	in.	in.	in.	ea.	in.	ea.	in.
7.0	.179	12	8	¾	4	¾	2	⅝
7.5	.179	14	8	¾	4	¾	2	⅝
8.0	.179	14	8	¾	4	¾	2	⅝
9.0	.179	16	10	⅞	4	1	2	⅝
10.0	.179	18	10	⅞	4	1	2	⅝
9.5	.239	18	10	1	6	1	3	⅝
10.0	.239	18	10	1	6	1	3	⅝

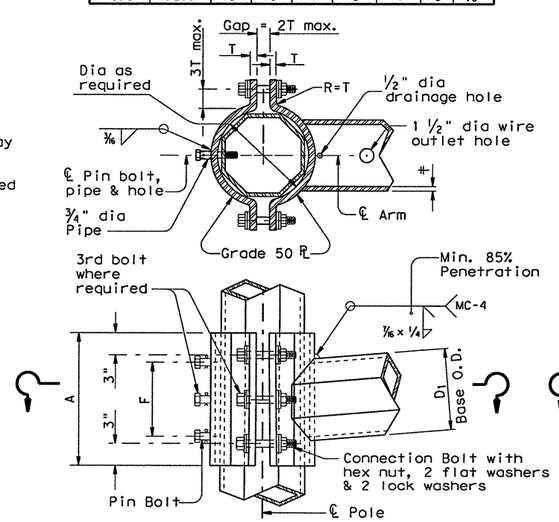

CLAMP-ON DETAIL 2

ARM SIZE D_1	‡	A	F	CONN. BOLTS No.	CONN. BOLTS Dia	PIN BOLTS No.	PIN BOLTS Dia
in.	in.	in.	in.	ea.	in.	ea.	in.
6.5	.179	12	8	4	1	2	⅝
7.5	.179	14	8	4	1	2	⅝
8.0	.179	14	8	4	1	2	⅝
9.0	.179	16	10	4	1	2	⅝
9.5	.179	18	12	6	1	3	⅝
9.5	.239	18	12	6	1	3	⅝
10.0	.239	18	12	6	1	3	⅝

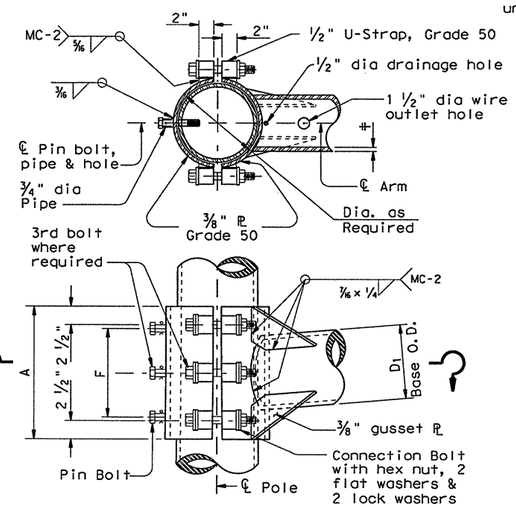

CLAMP-ON DETAIL 3

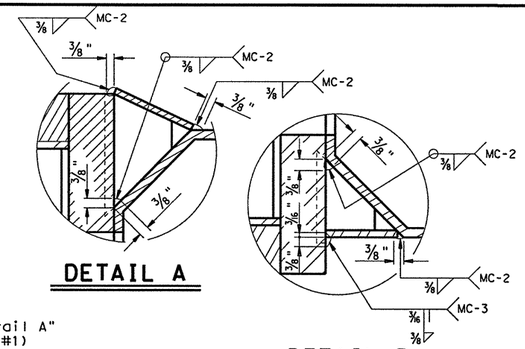

DETAIL A

DETAIL B

MATERIALS	
Round Shafts or Polygonal Shafts	ASTM A595 GR A, ASTM A570 GR 50, ASTM A607 GR 50, ASTM A572 GR 50 or A36M50
Plates (1)	ASTM A36 OR A572 GR 50 or A595(2) or A36M50
Connection Bolts	ASTM A325 except where noted
Pin Bolts	ASTM A325
Pipe	ASTM A53 GR A or B, or A501
Misc. Hardware	Galvanized steel or stainless steel or as noted

(1) Any of the materials listed for plates may be used where the drawings do not specify a particular Grade designation.

(2) If A595 material is used, it need not be cold worked to A595 requirments, but material must have 40 ksi minimum yield prior to fabrication.

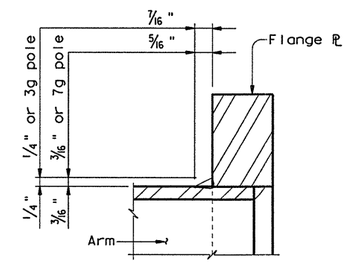

FIXED MOUNT ARM

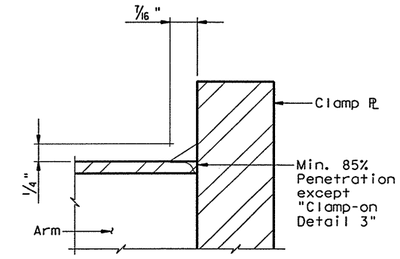

CLAMP-ON ARM

ARM BASE WELD DETAILS

GENERAL NOTES:

Clamp-on details are used for the second arm on dual mast arm assemblies. A Maximum 1 ½" wide vertical slotted hole may be cut in the front clamp plate to facilitate drainage during galvanizing. The slot shall be centered behind the arm and shall be no longer than the arm diameter minus 1"

Fixed mount details are used for single mast arm assemblies and for the first arm on dual mast arm assemblies.

Where duplicate parts occur on a detail, welds shown for one part shall apply to all similar parts on the detail.

Pin bolts are required to prevent rotation of clamp-on arms under design wind forces.

NOTE:

Pin bolts shall be A325 with threads excluded from the shear plane. Pin bolt and ¾" dia pipe shall have 3/16" dia holes for a ⅛" dia galvanized cotter pin. Back clamp plate shall be furnished with a ¾" dia hole for each pin bolt. An 11/16" dia hole for each pin bolt shall be field drilled through the pole after arm orientations have been approved by the Engineer.

Texas Department of Transportation
Traffic Operations Division

STANDARD ASSEMBLY FOR TRAFFIC SIGNAL SUPPORT STRUCTURES

MAST ARM CONNECTIONS

MA-C-09

© TxDOT August 1995

DN: TXDOT	CK: TXDOT	DW: TXDOT	CK: TXDOT

REVISIONS
5-96
5-09 Connection ! Thk E

CONT	SECT	JOB	HIGHWAY
0091	04	055	SH 289

DIST	COUNTY	SHEET NO.
18	COLLIN	401

1268

DATE: 4/4/2011 8:24:05 AM
FILE: U:\US 289, 0091-04-055\MAC.DGN

R-201104-01

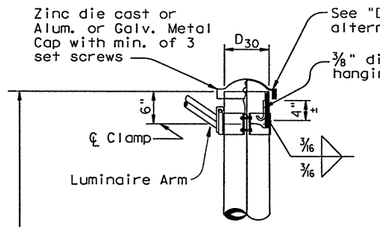

DETAIL A

(for pole with luminaire)

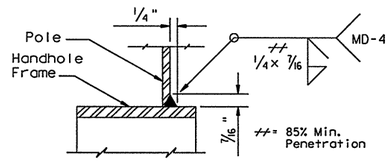

DETAIL E

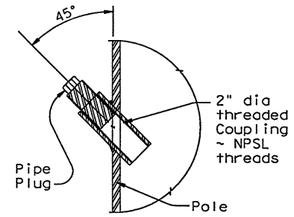

COUPLING DETAIL

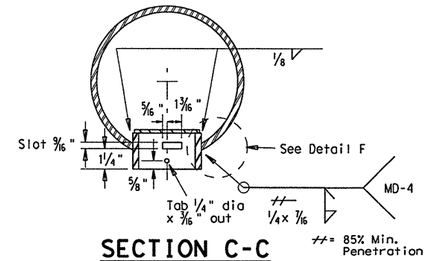

SECTION C-C

Opening for access compartment shall be no more than 1/16 inch wider than the access compartment itself.

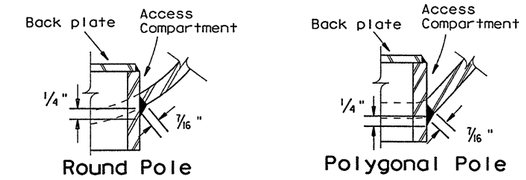

DETAIL F

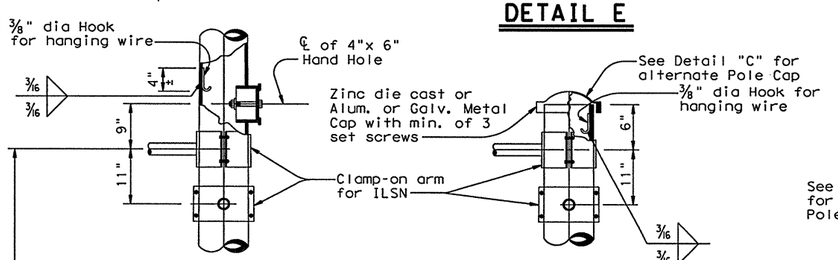

DETAIL J

(If ILSN applied)

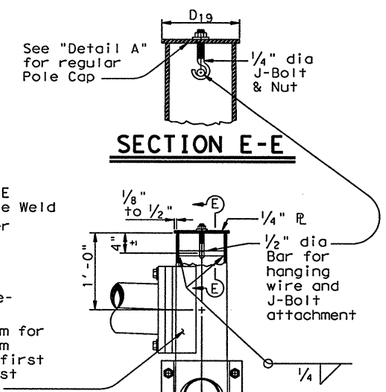

SECTION E-E

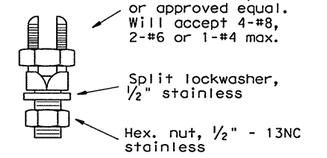

COPPER GROUND CONNECTOR

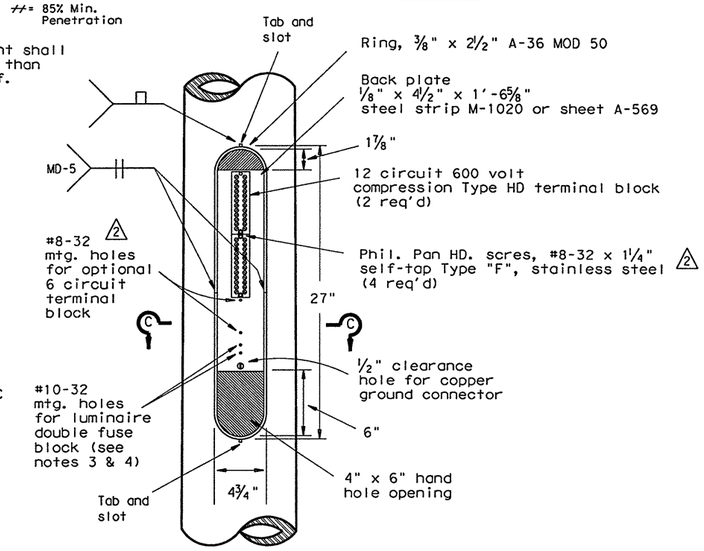

ACCESS COMPARTMENT

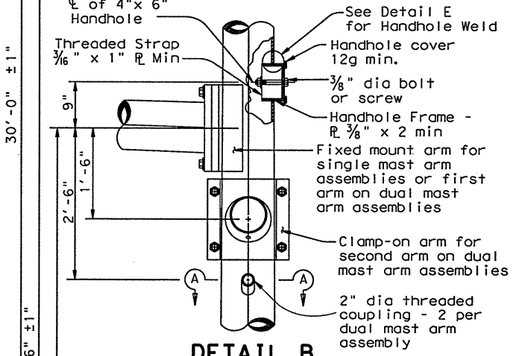

DETAIL B

(for 30' pole with luminaire and ILSN sign)

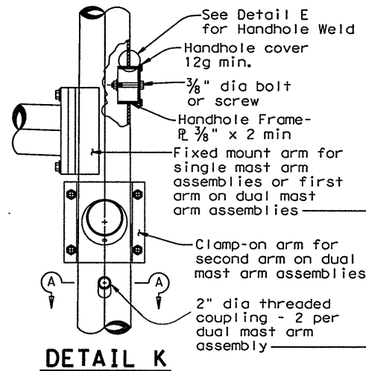

DETAIL K

(for 24' pole with ILSN sign and no luminaire)

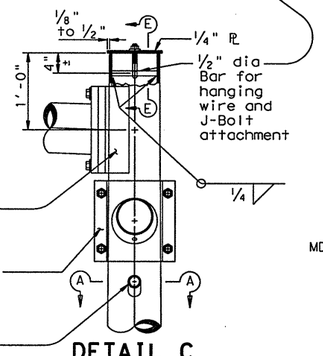

DETAIL C

(for 19' pole with no ILSN sign and no luminaire)

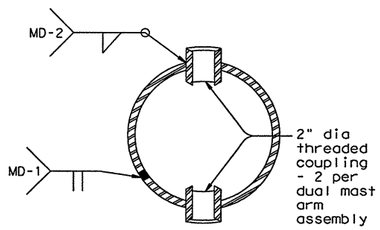

SECTION A-A

1. The cover shall be one piece formed from ABS plastic, shall be a pearl gray color, and shall be suitable for exposure to harsh sunlight and extreme weather. Cover shall latch with two screw latches and shall fit tightly to the enclosure ring to create a rainproof seal. Latch screws shall be 1/4-20 stainless flat socket head screws with tamper proof feature.
2. The pole manufacturer shall provide with each pole a separate kit consisting of: one cover with two latching assemblies, two terminal strips (Marathon #985GP12CU or approved equal), four #8-32 x 1 1/4" self tapping type "F" stainless steel pan head screws, and one ground connector (Blackburn TTC, Burndy KC22J12T13, or Ilsco SSS-5). The traffic signal contractor shall install the kit items in the field. (2)
3. The screw hole spacing on the enclosure back plate shall be for two Marathon #985GP12 terminal strips, one Marathon #985GP06CU terminal strip, and one Bussmann #BM6032B fuse block. (1)
4. Install one Bussmann #BM6032B, Littelfuse #L60030M-2C, or Ferraz-Shawmut #30352 fuse block for poles where luminaires are to be installed.

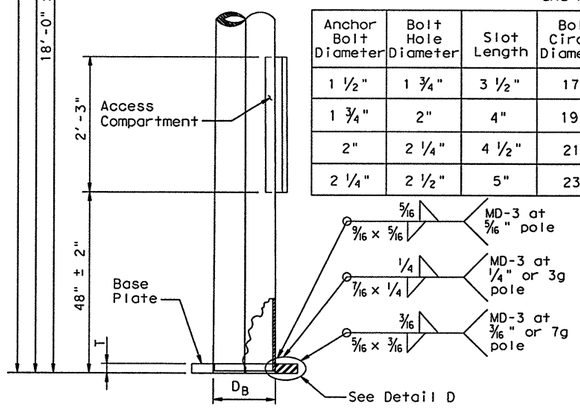

POLE ELEVATION

Anchor Bolt Diameter	Bolt Hole Diameter	Slot Length	Bolt Circle Diameter	Base PL Dim. L x T	Adjust. Range
1 1/2"	1 3/4"	3 1/2"	17"	18" x 1 1/2"	13.4°
1 3/4"	2"	4"	19"	20" x 1 3/4"	13.5°
2"	2 1/4"	4 1/2"	21"	22" x 2"	13.6°
2 1/4"	2 1/2"	5"	23"	24" x 2 1/4"	13.7°

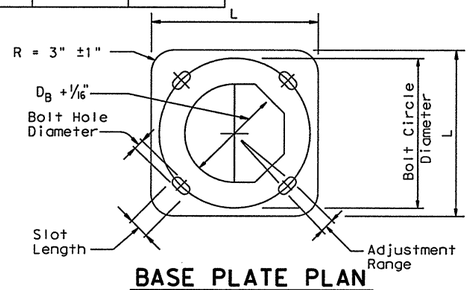

BASE PLATE PLAN

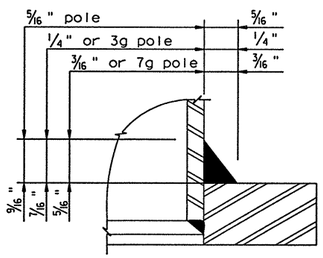

DETAIL D

DAL Revision: Modified access compartment height.

(1) 10/03 Revision: Revised notes, and remove detail.

(2) 2/07 Revision: Revised dimension of terminal-block screw.

STANDARD PLANS
Texas Department of Transportation

TRAFFIC SIGNAL SUPPORT STRUCTURES MAST ARM POLE DETAILS

MA-D-07 (DAL)

© TxDOT August 1995	DN: TxDOT	CK: TxDOT	DW: TxDOT	CK: TxDOT
REVISIONS 8-99, 10-00, 10-03, 2-07	STATE DISTRICT: DAL	FEDERAL REGION: 6	FEDERAL AID PROJECT: (SEE TITLE SHEET)	SHEET: 402
COUNTY: COLLIN	CONTROL: 0091	SECTION: 04	JOB: 055	HIGHWAY: SH 289

DISCLAIMER
The use of this standard is governed by the "Texas Engineering Practice Act". No warranty of any kind is made by TxDOT for any purpose whatsoever. TxDOT assumes no responsibility for the conversion of this standard to other formats or for incorrect results or damages resulting from its use.

FILE: DTSP14FED — ACC:

DISCLAIMER: The use of this standard is governed by the "Texas Engineering Practice Act". No warranty of any kind is made by TxDOT for any purpose whatsoever. TxDOT assumes no responsibility for the conversion of this standard to other formats or for incorrect results or damages resulting from its use.

FOUNDATION DESIGN TABLE

FDN TYPE	DRILLED SHAFT DIA	REINFORCING STEEL: VERT BARS	REINFORCING STEEL: SPIRAL & PITCH	DRILLED SHAFT LENGTH-ft ④, ⑤, ⑥: TEXAS CONE PENETROMETER N blows/ft: 10	15	40	ANCHOR BOLT DESIGN ①: ANCHOR BOLT DIA	Fy (ksi)	BOLT CIR DIA	ANCHOR TYPE	FOUNDATION DESIGN LOAD ②: MOMENT K-ft	SHEAR Kips	TYPICAL APPLICATION
24-A	24"	4- #5	#2 at 12"	5.7	5.3	4.5	¾"	36	12 ¾"	1	10	1	Pedestal pole, pedestal mounted controller.
30-A	30"	8- #9	#3 at 6"	11.3	10.3	8.0	1 ½"	55	17"	2	87	3	Mast arm assembly. (see Selection Table)
36-A	36"	10- #9	#3 at 6"	13.2	12.0	9.4	1 ¾"	55	19"	2	131	5	Mast arm assembly. (see Selection Table) 30' strain pole with or without luminaire.
36-B	36"	12- #9	#3 at 6"	15.2	13.6	10.4	2"	55	21"	2	190	7	Mast arm assembly. (see Selection Table) Strain pole taller than 30' & strain pole with mast arm
42-A	42"	14- #9	#3 at 6"	17.4	15.6	11.9	2 ¼"	55	23"	2	271	9	Mast arm assembly. (see Selection Table)

NOTES:

① Anchor bolt design develops the foundation capacity given under Foundation Design Loads.

② Foundation Design Loads are the allowable moments and shears at the base of the structure.

③ Foundations may be listed seperately or grouped according to similarity of location and type. Quantities are for the Contractor's information only.

④ Field Penetrometer readings at a depth of approximately 3 to 5 feet may be used to adjust shaft lengths.

⑤ If rock is encountered, the Drilled Shaft shall extend a minimum of two diameters into solid rock.

⑥ Decimal lengths in Design Table are to allow interpolation for other penetrometer values. Round to nearest foot for entry into Summary Table.

FOUNDATION SUMMARY TABLE ③

LOCATION IDENTIFICATION	AVG. N BLOW /ft.	FDN TYPE	NO. EA	DRILLED SHAFT LENGTH ⑥ (FEET): 24-A	30-A	36-A	36-B	42-A
SH 289 @ CR 53/ CR 88								
P1	10	36-A	1			13.0		
P2	10	24-A	1	4.0				
P3	10	36-A	1			13.0		
P4	10	24-A	1	4.0				
P5	10	36-A	1			13.0		
P6	10	24-A	1	4.0				
P7	10	36-A	1			13.0		
P8	10	24-A	1	4.0				
SH 289 @ FM 455								
P2	10	24-A	1	6.0				
P4	10	24-A	1	6.0				
P5	10	36-A	1			13.0		
P6	10	24-A	1	6.0				
P8	10	24-A	1	6.0				
P9	10	36-A	1			13.0		
TOTAL DRILLED SHAFT LENGTHS				40.0		78.0		

FOUNDATION SELECTION TABLE FOR STANDARD MAST ARM PLUS ILSN SUPPORT ASSEMBLIES (ft)

		FDN 30-A	FDN 36-A	FDN 36-B	FDN 42-A
80 MPH DESIGN WIND SPEED	MAX SINGLE ARM LENGTH	32' ①	48'		
	MAXIMUM DOUBLE ARM LENGTH COMBINATIONS	24' X 24'			
		28' X 28'			
		32' X 28'	32' X 32'		
			36' X 36'		
			40' X 36'		
			44' X 28'	44' X 36'	
100 MPH DESIGN WIND SPEED	MAX SINGLE ARM LENGTH	①	36'	44'	
	MAXIMUM DOUBLE ARM LENGTH COMBINATIONS		24' X 24'		
			28' X 28'		
			32' X 24'	32' X 32'	
				36' X 36'	
				40' x24'	40' X 36'
					44' x 36'

EXAMPLE:
1. For 80mph design wind speed, foundation 30-A can support up to a 32' arm with another arm up to 28'
2. For 100mph design wind speed, foundation 36-A can support a single 36' mast arm.

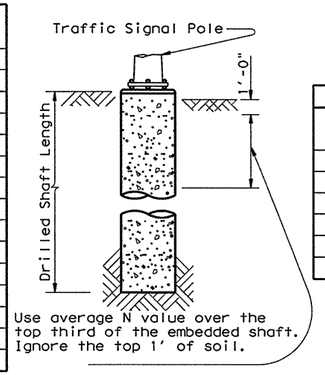

Use average N value over the top third of the embedded shaft. Ignore the top 1' of soil.

ANCHOR BOLT & TEMPLATE SIZES

BOLT DIA IN.	⑦ BOLT LENGTH	TOP THREAD	BOTT THREAD	BOLT CIRCLE	R2	R1
¾"	1'-6"	3"	—	12 ¾"	7 ⅛"	5 ⅝"
1 ½"	3'-4"	6"	2"	17"	10"	7"
1 ¾"	3'-10"	7"	2 ¼"	19"	11 ¼"	7 ¾"
2"	4'-3"	8"	2 ½"	21"	12 ½"	8 ½"
2 ¼"	4'-9"	9"	3"	23"	13 ¾"	9 ¼"

⑦ Min dimensions given, longer bolts are acceptable.

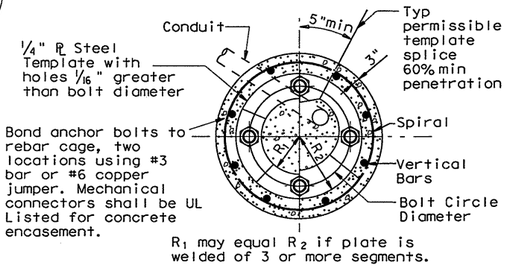

TOP VIEW

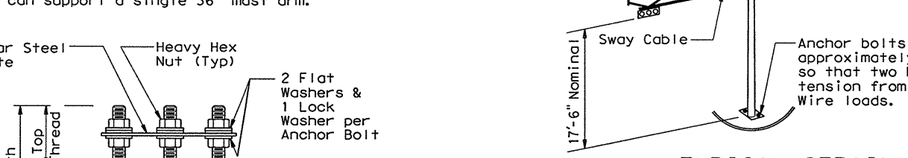

TYPICAL STRAIN POLE ASSEMBLY

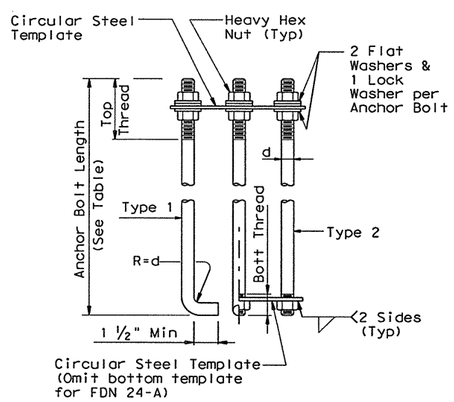

HOOKED ANCHOR (TYPE 1) | NUT ANCHOR (TYPE 2)

ANCHOR BOLT ASSEMBLY

INSTALLATION PROCEDURE:

Threads of anchor bolts shall be coated with pipe joint compound prior to installation of upper nuts when erecting pole. After pole is plumbed and in permanent alignment, the exposed threads of painted bolts shall be cleaned and an additional coating of zinc-rich paint applied to seal the bolt thread-nut joint.

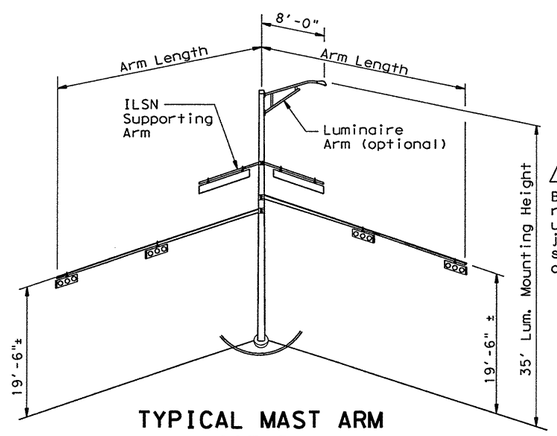

TYPICAL MAST ARM ASSEMBLY

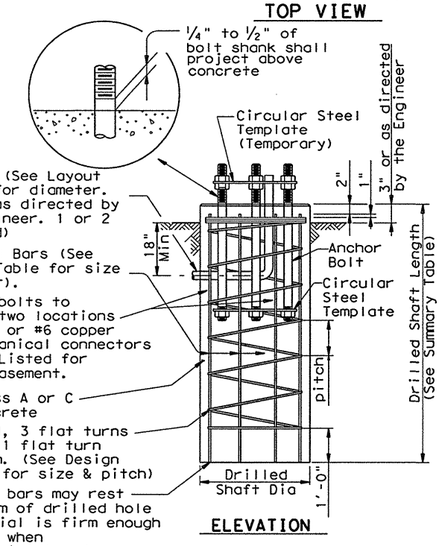

ELEVATION

FOUNDATION DETAILS

GENERAL NOTES:

Design conforms to 1994 AASHTO Standard Specifications for Structural Supports for Highway Signs, Luminaires and Traffic Signals and interim revisions thereto.

Reinforcing steel shall conform to Item 440.

Concrete shall be Class A or C.

Threads for anchor bolts and nuts shall be rolled or cut threads of unified national coarse thread series except for A193B7 bolts which shall have 8 pitch thread series. Bolts and nuts shall have Class 2A and 2B fit tolerances. Galvanized nuts shall be tapped after galvanizing.

Anchor bolts that are 1" in diameter or less shall conform to ASTM A36. Anchor bolts larger than 1" in diameter shall conform to A36M55 in accordance with the Item, "Anchor Bolts" or ASTM A193B7 or A687. Galvanize or coat with zinc-rich paint a minimum of the upper 14 inches of all anchor bolts unless otherwise noted. Exposed nuts shall be galvanized or coated with zinc-rich paint. Washers shall be galvanized. Templates and embeded nuts need not be galvanized.

11/99 Revision

① Changed to Facilitate new terminal strip enclosure

② Changed from ground rod to UFER ground

Texas Department of Transportation
Traffic Operations Division

TRAFFIC SIGNAL POLE FOUNDATION

TS-FD-99

© TxDOT August 1995

DN: TxDOT	CK: TxDOT	DW: TxDOT	CK: TxDOT

REVISIONS 5-96 11-99

CONT	SECT	JOB	HIGHWAY
0091	04	055	SH 289
DIST		COUNTY	SHEET NO.
18		COLLIN	403

128

DATE: 4/11/2011 2:36:14 PM
FILE: U:\US 289, 0091-04-055\TS-FD.dgn

R-201104-01

DISCLAIMER: The use of this standard is governed by the "Texas Engineering Practice Act". No warranty of any kind is made by TxDOT for any purpose whatsoever. TxDOT assumes no responsibility for the conversion of this standard to other formats or for incorrect results or damages resulting from its use.

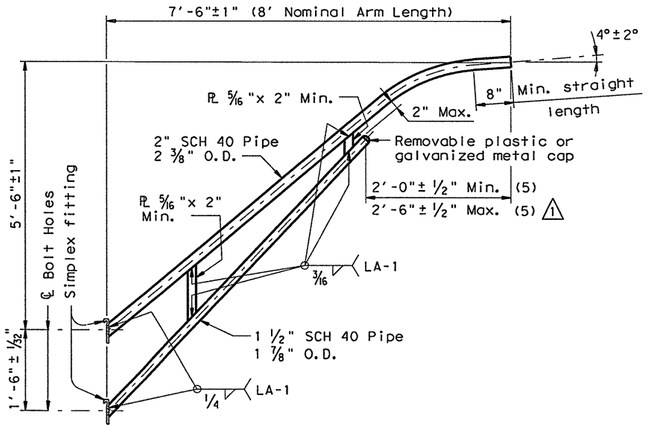

8-FOOT LUMINAIRE ARM

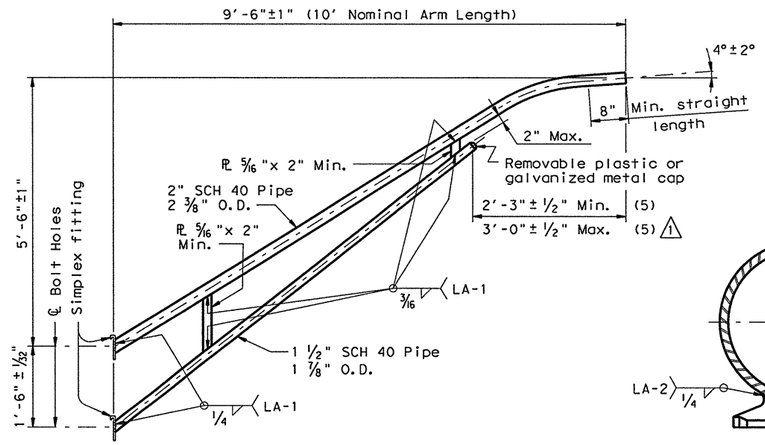

10-FOOT LUMINAIRE ARM

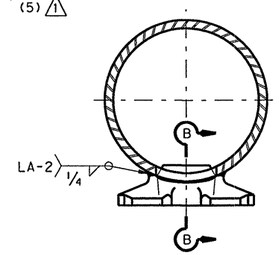

DIRECT ATTACHMENT DETAIL

MATERIALS	
Pole or Arm Simplex	ASTM A27 GR 65-35 or A148 GR 80-50 or A576 GR 1021 (4) or A36 (Arm only)
Arm Pipes	ASTM A53 GR A or B or A500 GR B or A501 or A595 (2) or A715 GR 50
Arm Plates (3)	ASTM A36 or A572 GR50 (1) or A595 GR A or A588
Misc.	ASTM designations as noted

(1) ASTM A36M50 steel as described in Item 442 "Metal for Structures" may be used in lieu of A 572 GR 50.

(2) If A595 GR A material is used, arm need not be cold worked to A595 requiremants, but material must have 40 ksi minimum yield prior to fabrication.

(3) Either of the materials listed for pates may be used where the drawings do not specify a particular ASTM designation.

(4) A576 must be suitable for forging and also meet minimum tensile strength of 65 ksi, minimum yield of 35 ksi, and elongation in 2 inches of 22 percent.

(5) Dimensional limits are given to show acceptable variation in design. All of a Fabricator's production of a particular arm length shall have the same dimensions within specified tolerances.

GENERAL NOTES:

Design conforms to 1994 AASHTO Standard Specifications for Structural Supports for Highway Signs, Luminaires, and Traffic Signals and Interim Revisions thereto. Design Wind Speed equals 90 mph plus a 1.3 gust factor. Arms are designed to support a 75 lb. luminaire having an effective projected area (actual area times drag coefficient) of 1.5 sq. ft.

Materials and fabrication shall be in accordance with the Specificatons and with the details, dimensions, and weld procedures shown herein. Weld references call for preapproved weld procedures which the Fabricator must obtain prior to fabrication. In the absense of specified Fabricaton tolerances, dimensions shall be within the tolerances generally obtainable in normal fabrication practice.

Unless otherwise noted, all parts shall be galvanized after fabrication in accordance with the Specifications.

Special designs require submission of shop drawings in accordance with the item "Steel Structures".

Each pole simplex fitting shall be supplied with 2 A325 bolts and 2 lock washers of the size specified. The bolts and lock washers shall be secured to the pole with the other hardware items called for in the plans. When clamp attachment is specified, the Fabricator shall ship the clamp assembly securely attached to the pole at the location shown on the plans.

If clamp assemblies are ordered without poles, the Fabricator shall ship one upper and one lower clamp assembly together in a single package, including all nuts and washers required for the clamps and simplex fittings.

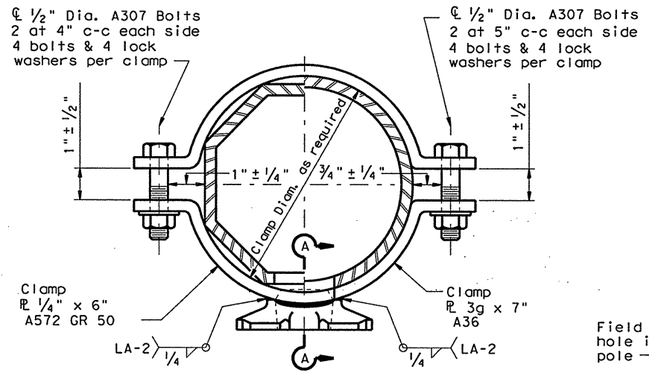

CLAMP ATTACHMENT DETAIL NO. 1
(HALF SECTION)

CLAMP ATTACHMENT DETAIL NO. 2
(HALF SECTION)

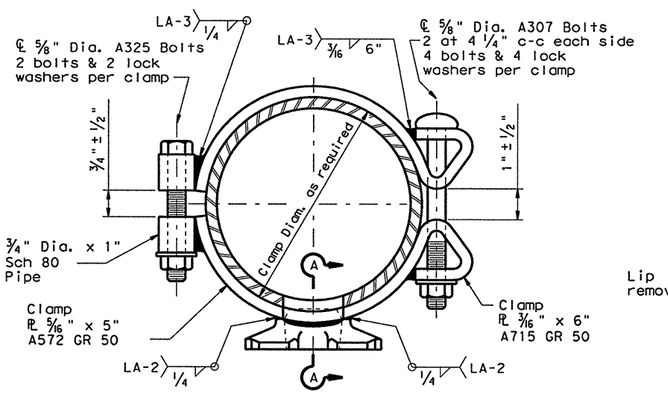

CLAMP ATTACHMENT DETAIL NO. 3
(HALF SECTION)

CLAMP ATTACHMENT DETAIL NO. 4
(HALF SECTION)

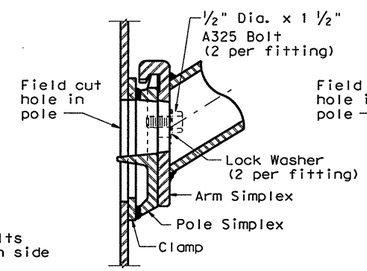

UPPER SIMPLEX FITTING

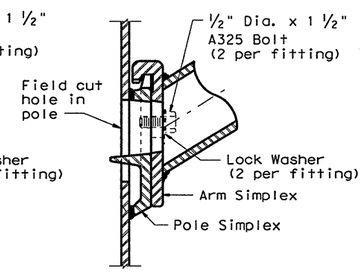

UPPER SIMPLEX FITTING

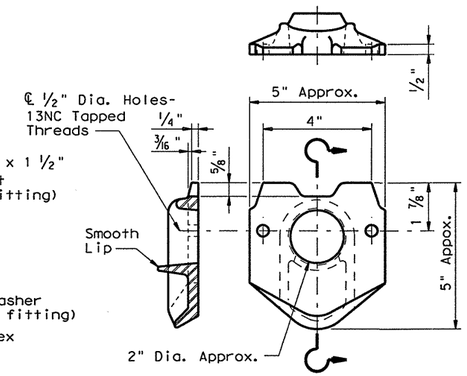

POLE SIMPLEX DETAIL

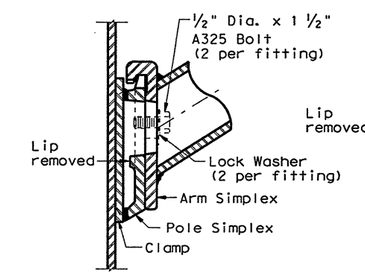

LOWER SIMPLEX FITTING

SECTON A-A

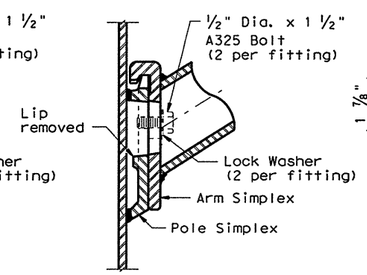

LOWER SIMPLEX FITTING

SECTON B-B

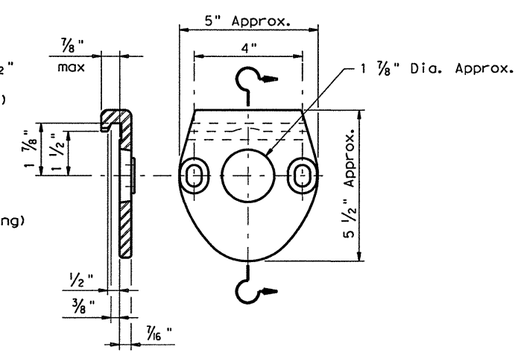

ARM SIMPLEX DETAIL

1 1-99 - minor typo correction

Texas Department of Transportation
Traffic Operations Division

STANDARD ASSEMBLY DRAWINGS FOR LUMINAIRE SUPPORT STRUCTURES

ARM DETAILS

LUM-A-99

© TxDOT August 1995

DN: TXDOT	CK: TXDOT	DW: TXDOT	CK: TXDOT

REVISIONS: 5-96, 1-99

CONT	SECT	JOB	HIGHWAY
0091	04	055	SH 289

DIST	COUNTY	SHEET NO.
18	COLLIN	404

DATE: 4/4/2011 8:16:41 AM
FILE: U:\US 289, 0091-04-055\LUM-A.DGN

R-201104-01

DISCLAIMER: The use of this standard is governed by the "Texas Engineering Practice Act". No warranty of any kind is made by TxDOT for any purpose whatsoever. TxDOT assumes no responsibility for the conversion of this standard to other formats or for incorrect results or damages resulting from its use.

ROADWAY ILLUMINATION LIGHT FIXTURES

Fixture Housing:

A. Provide *UL listed fixture suitable for use in wet locations. Ensure optical compartment meets IEC Standard 60529-IP 65. Place a permanent label inside fixture indicating fixture meets *UL, IP 65 optical, and shows date of manufacture. Meet ANSI 136.15 wattage label requirements.
B. Construct fixture housing, lens frame, and door from 96% copper-free, die cast aluminum. Provide fixture mounting to a 2-in. pipe arm. Equip fixture with a 4-bolt clamp capable of adjustments plus or minus 5 degrees from level. Meet ANSI 136.31 3.0 G vibration requirements.
C. Attach a level bubble to the fixture housing. Ensure the level bubble is sensitive to 1 degree changes in position at any point within 5 degrees of the level position. Ensure the level bubble is clearly visible from the ground up to a 50 ft. mounting height. Ensure level bubble corresponds to level position of fixture.
D. Do not exceed 1.6 sq. ft. effective projected area. Do not exceed 60 lb. maximum weight.
E. Equip fixture with a 3-prong photocell receptacle with shorting cap installed.
F. Paint inside and outside of fixture light gray, when installing on galvanized poles. For all other fixtures, paint to match the color of the pole as directed by the Department.
G. Use a thermoset powder coat system. Ensure paint exceeds 1000-hr. salt-spray test in accordance with ASTM B117. Ensure a nominal thickness of 2.5 mil and no pigment loss upon 50 double-rubs using Methyl Ethyl Ketone (MEK) solvent in accordance with ASTM D5402, "Standard Practice for Assessing the Solvent Resistance of Organic Coatings Using Solvent Rubs."
H. Fabricate brackets, nuts, bolts, washers, ballast tray, and parts from stainless-steel, or aluminum of adequate thickness as approved by the Department except that:
   1. The 4 bolts/studs, 4 flat washers, 4 lock washers, and clamp that attach the luminaire to the arm may be galvanized in accordance with ASTM A123, A153 or B633. Provide means to ensure clamp is in the open position when installing.
   2. Glass lens retainer spring clips may be fabricated from galvanized steel in accordance with ASTM A153.
   3. Provide nylon throat or other approved locking means for all stainless steel nuts.
I. Provide optical assemblies which meet the following:
   1. Polished aluminum reflectors with Alzak or equal coating.
   2. Do not paint reflectors, except that, when approved by the Engineer, some surfaces may be painted with 92% reflective white paint.
   3. Reflectors may be one piece or segmented as follows.
      a. One piece reflectors:
         1. Seal photometric compartment by the use of a seamless or vulcanized seam, closed-cell silicone gasket, or other method approved by the Department.
         2. Provide a non-adjustable lamp socket mounting method so the lamp center is consistent with the reflector.
      b. Segmented reflectors:
         1. Attach segments at both ends (or opposite sides if segments are square) of the segment to a rigid aluminum base plate and side wall support assembly. Seal glass lens to lens frame with a one piece seamless silicone gasket.
   4. Equip the optical assembly with a lamp support in addition to the lamp socket to ensure the outer envelope is positioned as intended.
J. Provide 5/32 in. thick (min.) clear heat tempered or borosilicate glass.

Electrical Components:

K. Meet the following ballast requirements and pass tests in accordance with Test Method Tex-1130-T, "Ballasts of Lighting Assemblies."
   1. Mount electrical components on a removable stainless steel or aluminum tray of adequate thickness.
   2. Provide a fixture wiring diagram on or near the ballast.
   3. Use a copper wound magnetic regulating three isolated coil ballast.
   4. Provide ballast factor between 0.95 and 1.0.
   5. When the circuit voltage indicated on the plans is applied, the ballast input wattage during fluctuations of the test voltage of plus 10 percent and minus 10 percent, do not exceed the following:
      a. 220 Watts for 150 watt nominal lamp rating
      b. 440 Watts for 250 watt nominal lamp rating
      c. 552 Watts for 400 watt nominal lamp rating
   6. During fluctuation of the test voltage of plus 10 percent and minus 10 percent, ensure the lamp wattage fluctuation does not exceed a total of 20 percent and ballast maintains lamp wattage within the following limits.
      a. 110 Watts minimum and 180 Watts maximum for 150 Watt nominal lamp rating
      b. 175 Watts minimum and 370 Watts maximum for 250 Watt nominal lamp rating
      c. 280 Watts minimum and 475 Watts maximum for 400 Watt nominal lamp rating
   7. Ensure the ballast power factor, when tested at circuit voltage indicated on the plans, is not less than 90%.
   8. Permanently and clearly mark ballast or fixture to indicate following:
      a. Lamp type
      b. Catalog number
      c. Voltage rating
      d. Connection diagram
      e. Manufacturer
      f. *UL listing
L. Meet the following electronic starting aid requirements and pass tests in accordance with Test Method Tex-1140-T, "Electronic Starting Aids of High Pressure Sodium Vapor Lighting Assembies."
   1. Provide a starting pulse with an amplitude of 2500 volts minimum, 4000 volts maximum.
   2. Ensure the pulse width is a minimum of 0.8 microseconds at 2250 volts.
   3. Ensure the pulse occurs when the open circuit voltage is equal to or greater than 90 percent of peak open circuit voltage.
   4. Ensure pulse repetition rate is a minimum of one per cycle.
   5. Provide a pulse current of 0.18 amperes (min.).
   6. Discontinue to pulse when, either,
      a. the lamp starts, or
      b. after a minimum of 3 minutes and a maximum of 10 minutes if the lamp fails to start.
M. Do not place fuses inside pole mounted luminaires. For wall mount or underpass mounted luminaires, provide internal 10 amp time-delay fuses.
N. Provide a two position terminal block for connecting supply wires which meet the following requirements:
   1. Insulate using nylon, porcelain, or phenolic material. Ensure phenolic terminal block is of adequate construction as approved by the Department.
   2. Fabricate terminals from nickel, tin plated brass, or aluminum.
O. Equip fixture with MOV surge protection in accordance with IEEE recommendations.
   1. Connect MOV from line to neutral or from line to line.
   2. Install MOV on the terminal block.

Lamp & Socket:

P. Provide *UL listed mogul base lamp sockets rated for 600 V, 1500 W that can withstand a 5000 V pulse. Meet *UL 496 requirements. Use porcelain-insulated lamp sockets with nickel plated copper alloy screw shells. Equip socket shell with a spring tensioned contact. Use nickel-plated copper alloy or stainless steel for the spring and contact.
Q. Supply and secure lamps inside the fixture that meet the following:
   1. Use pre-qualified high pressure sodium (HPS) lamps from TxDOT's material producers list of the wattages shown on the plans. No alternatives allowed.
   2. Average rated lamp life 30,000 hours.
   3. Fully extinguish at end of usable lamp life and remain extinguished without cycling.
   4. Do not provide lamps that burn at reduced output at end of life.
   5. Meet the Federal Toxic Characteristic Leachate Procedure (TCLP) limits.

Performance:

R. Meet the following photometric requirements using published photometric data and photometric data obtained by testing sampled fixtures.
   1. 150 Watt mast arm (underpass) mounted luminaire. Meet IESNA Cutoff requirements. Provide a minimum intensity of 0.20 foot-candle in a rectangular area measuring 110.0 ft. by 30.0 ft., when mounted in a level position as indicated on the properly mounted fixture level bubble 20.0 ft. above the midpoint of either long side of the surface area. Do not exceed 50:1 maximum to minimum horizontal illuminance uniformity ratio within the rectangular area.
   2. 250-watt mast arm mounted luminaire. Meet IESNA Cutoff requirements. Provide a minimum intensity of 0.20 foot-candle in a rectangular area measuring 190.0 ft. by 45.0 ft., when mounted properly in a level position as indicated on the level bubble 40.0 ft. above the midpoint either long side of the surface area. Ensure light intensities along a line parallel to and 20.0 ft. in from the long side of this rectangular area do not decrease by more than 0.50 foot-candles in any 5.0 ft. interval along the line from 10.0 ft. to 90.0 ft. on both sides of the luminaire and provide a minimum intensity of 0.30 foot-candles at any point along the line. Do not exceed 20:1 maximum-to-minimum horizontal illuminance uniformity ratio within the rectangular area.
   3. 400-watt mast arm mounted luminaire. Meet IESNA Cutoff requirements. Provide a minimum intensity of 0.20 foot-candle in a rectanglular area measuring 220.0 ft. by 60.0 ft. when mounted properly in a level position as indicated on the level bubble 50.0 ft. above the midpoint of either long side of the surface area. Ensure light intensities along a line parallel to and 30.0 ft. in from the long side of this rectangular area do not decrease by more than 0.75 foot-candle in any 10.0 ft. interval along the line from 10.0 ft. to 90.0 ft. on both sides of the luminaire and provide a minimum intensity of 0.30 foot-candle at any point along the line. Do not exceed 20:1 maximum-to-minimum horizontal illuminance uniformity ratio within the rectangular area.
S. Ensure photometric data is consistent from fixture to fixture. Match published photometric data (or approved photometric reports submitted during the prequalification process as the typical photometric output instead of published data) as follows:
   1. Point of maximum candela within 5 degrees horizontally and vertically.
   2. Maximum candela within 20% of published maximum candela.
   3. Fixture efficiency within 10% of published efficiency.

* When reference is made to UL, it can be considered to mean a Nationally Recognized Independent Testing Lab (NRTL). Comperable standards of Canadian Standard Association, Electrical Testing Laboratories or Factory Mutual can be equal to the referenced UL standard.

Sheet 1 of 2

Texas Department of Transportation
Traffic Operations Division

ROADWAY ILLUMINATION DETAILS
(RDWY ILLUM LIGHT FIXTURES)
RID(LUM1)-07

©TxDOT January 2007	DN: TXDOT	CK: TXDOT	DW: TXDOT	CK: TXDOT
REVISIONS	CONT	SECT	JOB	HIGHWAY
	0091	04	055	SH 289
	DIST		COUNTY	SHEET NO.
	18		COLLIN	405

DATE: 4/4/2011 8:24:21 AM
FILE: U:\US 289, 0091-04-055\RID1-07.DGN

DISCLAIMER: The use of this standard is governed by the "Texas Engineering Practice Act". No warranty of any kind is made by TxDOT for any purpose whatsoever. TxDOT assumes no responsibility for the conversion of this standard to other formats or for incorrect results or damages resulting from its use.

Prequalification:

T. Use only pre-qualified fixtures. No alternates will be considered.
   1. Only materials with approved product codes or designations from prequalified producers are accepted on bids. The Construction Division (CST) of the Texas Department of Transportation (TxDOT) maintains the material producers list of approved producer product codes or designations. Use the following website to view this list: http://www.dot.state.tx.us/business/producer_list.htm
      Use of prequalified material does not relieve the contractor of the responsibility to provide materials that meet the specifications. All materials, including those shown on the prequalified material list, may be inspected and tested at any time and may be rejected if not in compliance with the specifications.
   2. Notify the Department in writing as to which fixture from the prequalified list of approved fixtures will be supplied on each project.
   3. To have a fixture listed as pre-qualified:
      a. Submit a sample of each type of luminaire and all pertinent data, including published photometric data and recently tested photometric data (IES format, both "averaged" and both sides of "un-averaged" data) to:
         TXDOT- TRF 118 East Riverside Dr. Austin, TX 78704
      b. Demonstrate a commitment to quality.
      c. Submit the following documentation:
         1. QA/QC program documentation with the following minimum requirements;
            a. Written statement of the companies QA/QC policy.
            b. QA/QC person employed that has special QA/QC training and has QA/QC as their primary job responsibility.
            c. A written procedure specifically for handling orders for fixtures built to TxDOT specifications.
            d. A written procedure for keeping track of fixtures built, certified, and tested for TxDOT orders.
            e. A check list of features for TxDOT fixtures with QA/QC person signature.
         2. Fixture UL certification
         3. IP 65 certification
         4. 3G certification
         5. Aluminum casting and paint analysis
         6. Socket, MOV, and shutoff ignitor data
         7. Stainless steel and aluminum bracket data
         8. Ballast electrical data
         9. Photometric data
         10. Lamp data
      d. Prequalification samples, if approved, will not be returned to the manufacturer but will be retained by the the Department for comparison testing. Once a fixture has been approved, do not change any material or manufacturing method without prior approval of the Department. Unapproved changes will result in rejection of the fixture.
      e. In addition, luminaires will be tested for compliance with this specification. Luminaires that inconsistently pass testing or that are inconsistent with published photometric information will be removed from the pre-qualified list at the discretion of the Department.

Sampling:

U. Sample in accordance with Test Method Tex-1110-T, "Sampling Lighting Assemblies."

Manufacturer Warranty:

V. Replace failed fixtures, when non-operable due to defects in materials or workmanship within five years of installation with a fixture that passes all testing, delivered to the project location. Lamps and photocells are subject to the warranties of their respective manufacturers.

Testing:

W. Conduct electrical testing required in the Ballast section. Provide photometric testing of fixtures. Test fixtures at the following rates.
   1. Manufactuer Testing. Before fixtures are shipped from the manufacturer, test fixtures as follows. From each lot or manufacturing run, select one completed fixture of each 25, with a minimum of 2 and a maximum of 5. Test photometrics at an independent test lab inspected and approved by TxDOT. Electrical testing may be performed at manufacturer's facility.
      a. Provide IES photometric report in two formats:
         1. Standard averaged format for asymmetric fixtures.
         2. Un-averaged format showing both sides. Un-averaged data may be supplied in two files or as approved by the Department.
      b. Provide electrical and photometric test data directly to TRF-TE electronically for evaluation prior to shipping fixtures to the project. Do not ship fixtures until test data for each lot is approved by TRF-TE.
      c. Provide the following information on test reports:
         1. TxDOT's Control-Section-Job number, maintenance contract number, or purchase order number the fixtures are assigned to,
         2. a unique fixture test number per fixture,
         3. date of manufacture, and
         4. quantities supplied and lot number per fixture type.
      d. Write the unique lab report number on the top of the fixture housing with permanent marker. Ensure the test lab retains the results for 5 years. Provide the Department access to documentation.
      e. Retain records of manufacturing lots, test reports, lot quantities, and other pertinent details. Submit records to the Department upon request.
      f. Submit to TRF-TE a daily shipment report for shipments to each job.
      g. Make available to TxDOT inspectors upon request, all manufacturing facilities involved in the production of fixtures for use on Department projects, inventories of fixtures produced to Department specifications, and records of fixture testing and tracking.
   2. Departmental Test Reporting. Departmental test reports will be issued in accordance with Tex 1110-T.

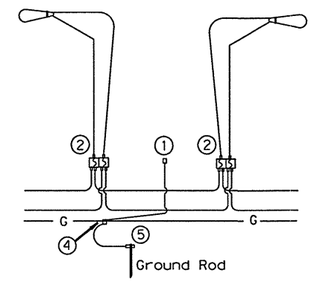

FOR THREE-WIRE CIRCUIT-CENTER GROUNDED

LUMINAIRES SERVED AT 480V ON 240/480 VOLT SERVICE OR LUMINAIRES SERVED AT 240V FOR FOR 120/240 VOLT SERVICE.

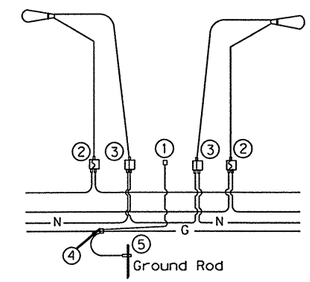

FOUR-WIRE CIRCUIT-CENTER GROUNDED

LUMINAIRES SERVED AT 240V (240/480 VOLT SERVICE)

NOTES:

1. Use 1/2 in.-13 UNC threaded, copper or tin-plated copper, pole bonding connector, sized appropriately for conductors.
2. 3. Use pre-qualified Breakaway Connectors for both T-Base and Shoe-Base installations.
4. Split Bolt or other connector.
5. Use Ground Rod Clamp listed for its intended purpose (i.e. concrete, direct burial...)

Sheet 2 of 2

Texas Department of Transportation
Traffic Operations Division

ROADWAY ILLUMINATION DETAILS

(RDWY ILLUM LIGHT FIXTURES)

RID(LUM2)-07

© TxDOT January 2007	DN: TXDOT	CK: TXDOT	DW: TXDOT	CK: TXDOT
REVISIONS	CONT	SECT	JOB	HIGHWAY
	0091	04	055	SH 289
	DIST		COUNTY	SHEET NO.
	18		COLLIN	400

72R

DATE: 4/4/2011 8:24:29 AM
FILE: U:\US 289, 0091-04-055\RID1-07.DGN

DISCLAIMER:
The use of this standard is governed by the "Texas Engineering Practice Act". No warranty of any kind is made by TxDOT for any purpose whatsoever. TxDOT assumes no responsibility for the conversion of this standard to other formats or for incorrect results or damages resulting from its use.

DATE: 4/4/2011 8:49:52 AM
FILE: U:\US 289, 0091-04-055\TSCF04.DGN

TOP VIEW
(Slab & Base)

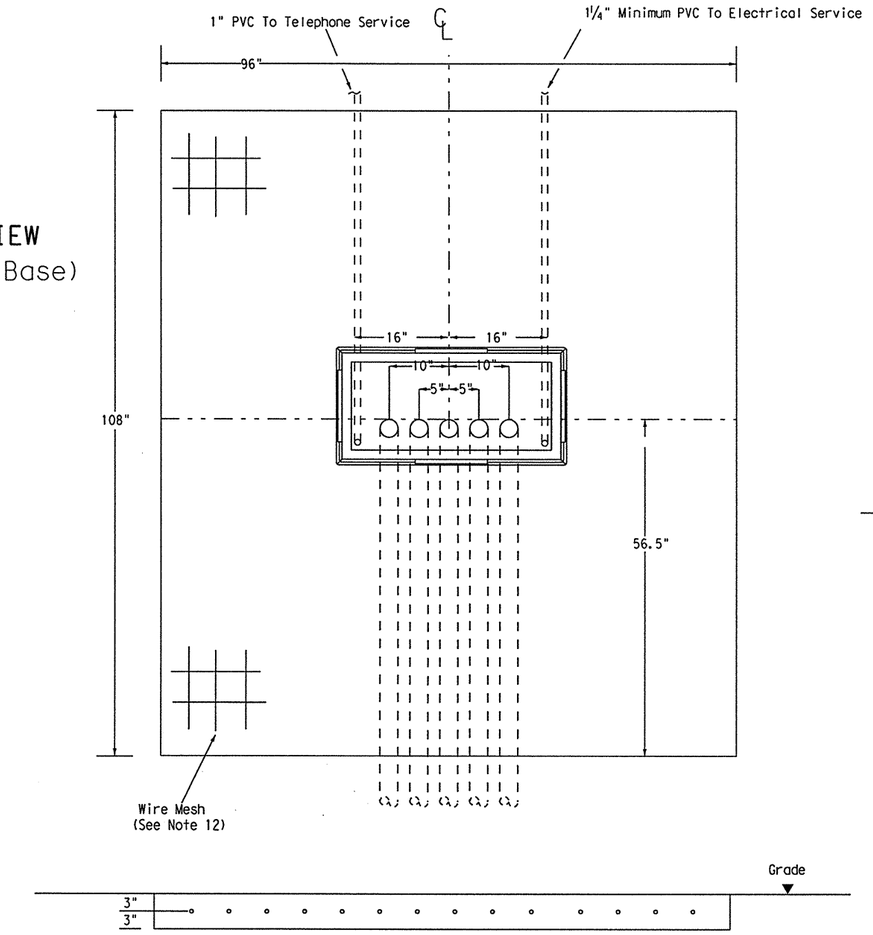

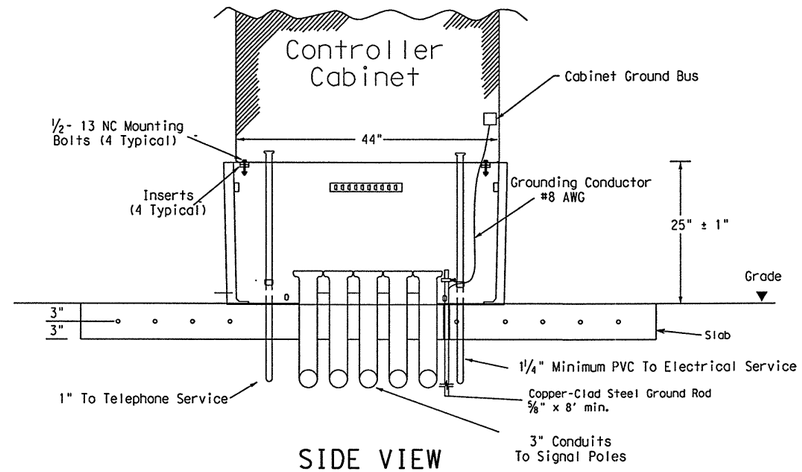

SIDE VIEW
(Slab & Base)

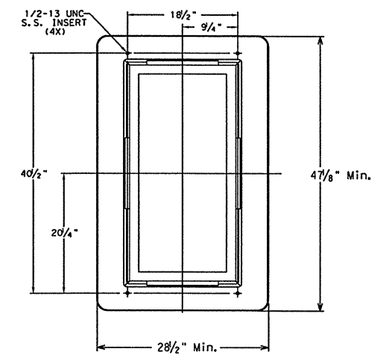

CABINET BASE

TRAFFIC SIGNAL CONTROLLER BASE:

1. Provide a traffic signal controller base (cabinet base) manufactured of polymer concrete material consisting of calcareous and siliceous stone; glass fibers and thermoset polyester resin. The polymer concrete cabinet base must be reinforced on the inside of the cabinet base with fiberglass matting. Provide one of the following bases: Armorcast Part # A6001848X24, Quazite Model # PG3048Z709, or other as approved by TxDOT Traffic Operation Division.
2. The polymer concrete material must have a minimum compressive strength of 10,300 pounds per square inch (psi), minimum flexural strength of 3600 psi, and minimum shear strength of 3600 psi.
3. The polymer concrete cabinet base must conform to the dimensions shown and must accommodate a standard TxDOT basemount cabinet.
4. Supply the cabinet base with four ½"-13 UNC stainless steel inserts for attachment of the cabinet to the base. Inserts must withstand a minimum torque of 50 ft-lb and a minimum straight pull out strength of 750 lbs.
5. Provide the cabinet base with 4 cable racks mounted one on each side of the base 2" to 7 " from the top edge of the base. Unless approved otherwise, cable racks must be 1-1/2 x 5/16 x 3/16 inch steel channel with eight T-slots spaced at 1-1/2 inches. The cable racks must easily accommodate the insertion of tie wraps to attach field wiring to the racks to serve as strain relief. Secure cable racks to the base using ½"-13 UNC stainless steel screws and inserts.
6. The cabinet base, when secured to the concrete slab with controller cabinet attached, must withstand a minimum wind load of 125 mph or a 850 lb force applied at 49" above the bottom of the base without causing the base or cabinet to come out of their anchored position or cause any permanent deformation. The manufacturer must supply certification by an independent testing laboratory or sealed by a Texas Licensed Professional Engineer. Provide the cabinet base with hardware for attachment to a concrete slab.
7. The traffic signal base must be permanently marked either by impress or by permanent ink with the manufacturer's model number and name or logo.
8. Seal the base to the concrete with a silicone caulk bead and fastened to the slab per manufacturer's instructions.

CONCRETE SLAB:

9. Traffic signal controller pad must be a portland cement concrete slab poured in place, must conform to the dimensions shown, and must be level.
10. Bond a #8 AWG copper ground wire and an 8 ft ground rod bonded to the reinforcing mesh by a suitable UL Listed clamp and terminated to the cabinet grounding bus for the purpose of providing a local ground for the electrical grounding conductor. The electrical grounding conductor specified in Item 680-3.A.4 is required and must be terminated to the cabinet ground bus.
11. Install a PVC sleeve to prevent the ground rod from direct embedment in the slab.
12. Provide welded wire mesh 6X6-W2.9 X W2.9 for reinforcement. Provide joints and splices in the mesh with a minimum 6-inch overlap. Center the mesh between top and bottom and provide a minimum 3 inch cover on the edges.
13. Provide Class B concrete minimum for the slab in accordance with Item 421. Construct the slab in accordance with Item 531.

CONDUITS:

14. Stub up and run 3-inch conduits through the slab to the various traffic signal poles and ground boxes as shown on the layouts. Install the number of conduits as shown on layouts plus two additional 3 inch conduits for future use. Terminate the conduits with a bushing between 2 and 4-inches above the slab.
15. Extend conduits for future use at least 18-inches from the edge of the slab, terminate underground with a coupling, and cap and seal so that the seal can be removed without damaging the coupling. This must also apply to unused telephone conduit.
16. Stub up two separate conduits through the slab from the electrical and telephone services. Run the conduit for the electrical feed directly to the electrical service enclosure. Run the conduit for the telephone line directly to the telephone service, usually located on the same pole as the electrical service. Telephone must not under any circumstance share a conduit with any other function.
17. Terminate electric and telephone conduits above the slab with a coupling. After the base is installed, extend the conduits above the top of the base and secure to the base using a steel one-hole strap or similar suitable substitute.

CONTROLLER CABINET:

18. Anchor the controller cabinet to the base using four stainless steel 1/2-13 NC bolts.
19. The silicone caulk bead specified in Item 680.3.B must be RTV 133.

PAYMENT:

20. Bid TS-CF as subsidiary to Item 680.

Texas Department of Transportation
Traffic Operations Division

TRAFFIC SIGNAL CONTROLLER CABINET BASE AND PAD

TS-CF-04

©TxDOT October 2000

DN: TXDOT	CK: TXDOT	DW: TXDOT	CK: TXDOT
12-04 REVISIONS			

CONT	SECT	JOB	HIGHWAY
0091	04	055	SH 289

DIST	COUNTY	SHEET NO.
18	COLLIN	407

NOTES:

1. INSTALL 1½" FITTING WITH SIX #6 AWG CONDUCTORS AND 6 EA OF ½" X 1½" 13 UNC MOUNTING BOLTS BETWEEN THE TWO CABINETS.
2. CAULK BETWEEN THE CABINETS OF THE CONTROLLER AND BBU UNIT.
3. EXTEND THE CONCRETE CONTROLLER PAD (REFER TO TS-CF-04, 6" SLAB) UNDER THE BBU AS SHOWN BELOW.
4. THE ABOVE WORK PERFORMED AND MATERIALS FURNISHED WILL NOT BE PAID FOR DIRECTLY, BUT WILL BE SUBSIDIARY TO THE BBU ASSEMBLY.

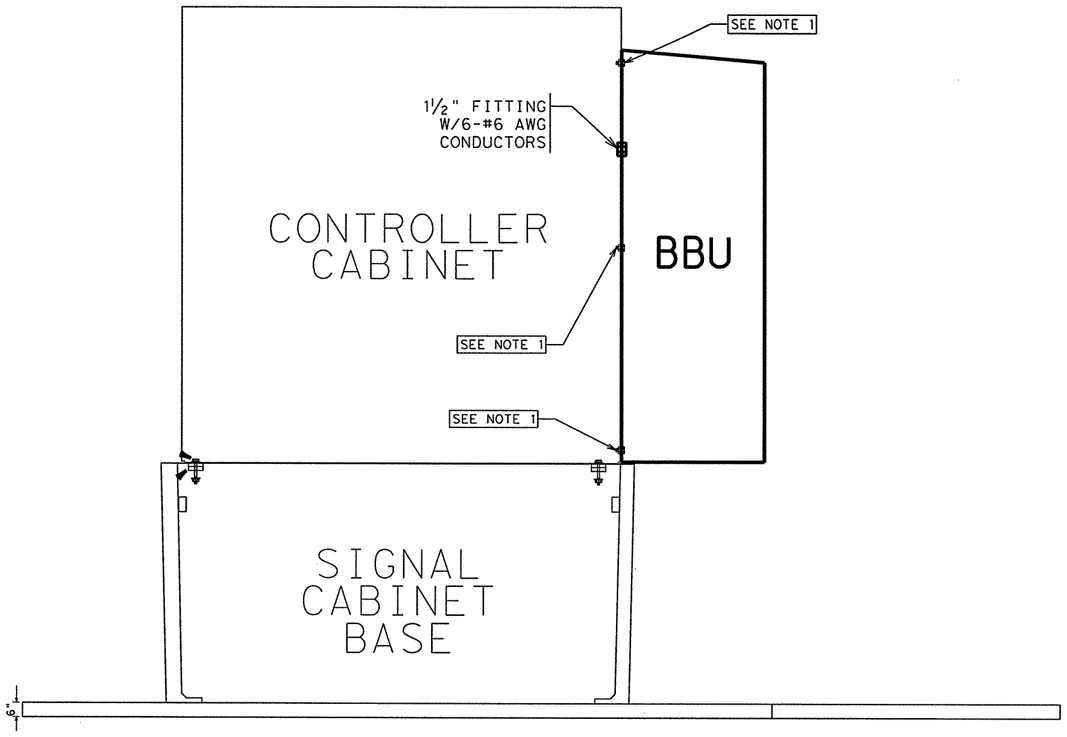

ELEVATION VIEW

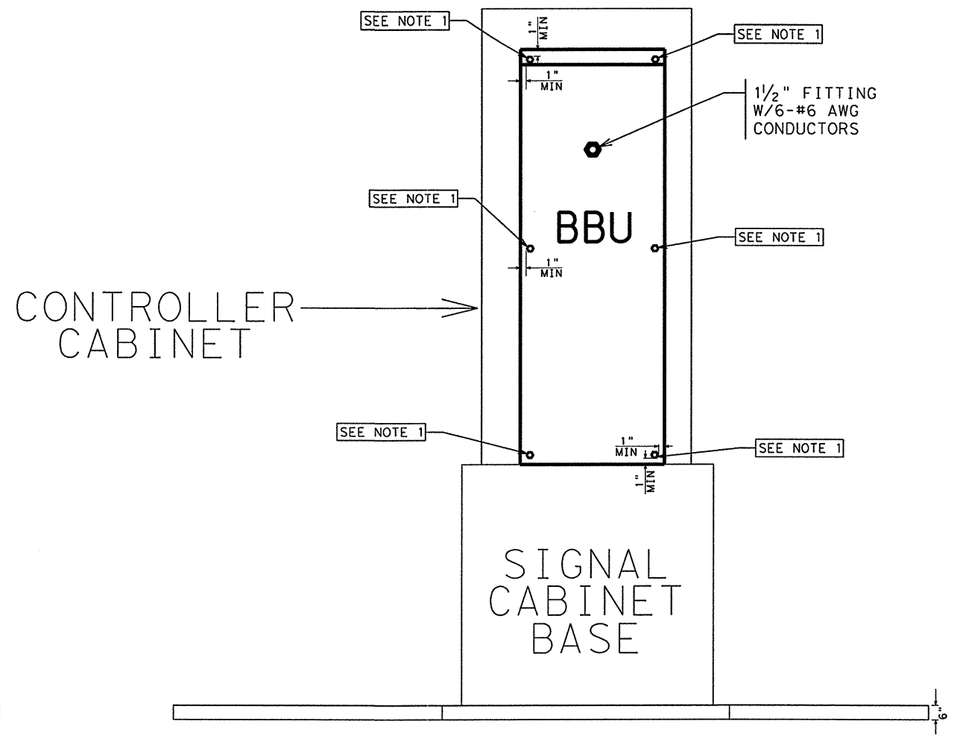

SIDE VIEW

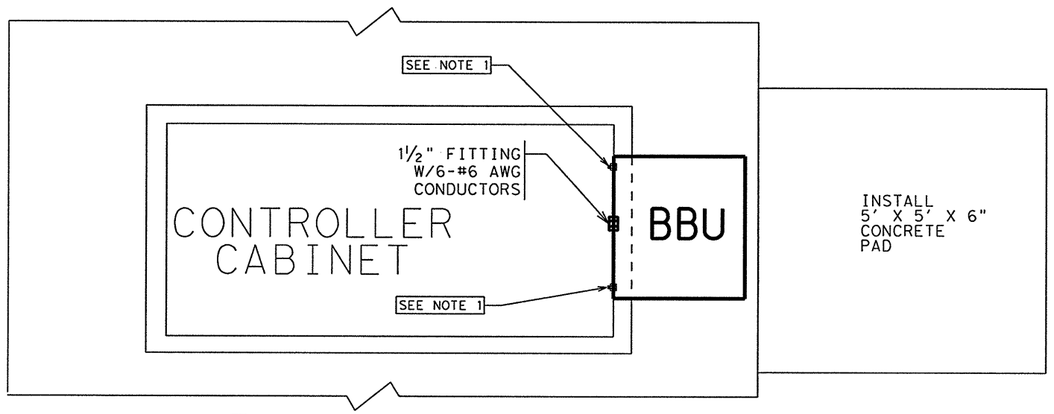

PLAN VIEW

Texas Department of Transportation
© 2009

INSTALLATION OF BBU

EXTERNAL BATTERY CABINET (SIDE MOUNT)

DALLAS DISTRICT STANDARD

N. T. S. SHEET 1 OF 1

FED. RD. DIV. NO.	FEDERAL AID PROJECT NO.		HIGHWAY NO.
6	(SEE TITLE SHEET)		SH 289
STATE	DISTRICT	COUNTY	SHEET NO.
TEXAS	DALLAS	COLLIN	408
CONTROL	SECTION	JOB	
0091	04	055	

R-201104-01

DISCLAIMER: The use of this standard is governed by the "Texas Engineering Practice Act". No warranty of any kind is made by TxDOT for any purpose whatsoever. TxDOT assumes no responsibility for the conversion of this standard to other formats or for incorrect results or damages resulting from its use.

I. GENERAL REQUIREMENTS FOR ALL ELECTRICAL WORK

The location of all conductors, conduits, junction boxes, ground boxes, and electrical services is diagrammatic only and may be shifted by the Engineer to accommodate local conditions.

Materials shall be new and unused. Materials and installation shall comply with the applicable provisions of the National Electrical Code (NEC), National Electrical Manufacturers Association (NEMA) standards, and shall be Underwriters Laboratories (UL) Listed unless otherwise shown on the plans or specifications or approved by the Engineer in writing. Faulty fabrication or poor workmanship in any material, equipment, or installation shall be justification for rejection. When reference is made to UL, it can be considered to mean a Nationally Recognized Independent Testing Lab (NRTL). Comparable standards of Canadian Standard Association, Electrical Testing Laboratories or Factory Mutual can be equal to the referenced UL standard. Where reference is made to NEMA listed devices, IEC listed devices shall not be considered to be an acceptable equal to a NEMA listed device. Acceptable devices may have both a NEMA and IEC listing.

With the exception of high strength bolts, miscellaneous nuts, bolts and hardware may be stainless steel when plans specify galvanized, provided that bolts are 1/2 inch or less in diameter. The Contractor shall provide the following electrical test instruments as required by the Engineer to confirm compliance with the contract and the NEC. Those test instruments are voltmeter, amp probe, megger (1000 volt DC) and torque wrenches. All meters shall have been properly calibrated within one year. Calibration certification shall be provided to the Engineer upon request. Calibration certification tag shall also be applied to the meter. The Contractor shall operate meters during inspection as requested by the Engineer. Grounding shall be as shown on the plans and in accordance with the NEC. Metallic conduit, light poles, luminaires on bridge structures, and all metal enclosures shall be bonded to the system-grounding conductor. The ground rod in each ground box or junction box at the bridge ends, and in each ground box installed for underpass lighting will also be bonded to the system grounding conductor. The grounding conductor shall be bare or, if insulated, shall be green. Ground rods, connectors, and bonding jumpers will not be paid for separately, but will be subsidiary to the various bid items.

SUBMITTALS:

The contractor shall submit for approval six (6) copies of catalog cut sheets for each of the following three (3) categories.
Category 1. Electrical services including photocell.
Catagory 2. Breakaway disconnects, heat shrink tubing, heat shrink filler tape, GelCaps and ground boxes which will include loading capacity certification.
Category 3. Highmast assembly kits, when applicable. See Item 614 "Highmast Illumination Assemblies". Submittals shall be legible and shall be marked to indicate which product on a cut sheet is to be supplied. Where manufacturers provide warranties and guarantees as a customary trade practice, the Contractor shall furnish to the State such warranties and guarantees.
Any deviation from plans or specifications, including deviations due to plan error should be prominently displayed on the submittal. Any changes not prominently noted in submittal and incorporated into the work without proper authorization will constitute grounds for rejection of that portion of the work.

II. CONDUIT

A. MATERIALS

1. Conduit and fittings shall be UL Listed for the intended use shown on plan sheets.
2. Conduit shall be the type shown by descriptive code or shown elsewhere on the plans. Substitution of the various types of conduits will not be permitted. All flexible conduit in rigid metallic conduit (RMC) systems shall be Liquidtight Flexible Metal (LFMC) conduit. All flexible conduit in PVC systems shall be Liquidtight Flexible Non-metallic conduit (LFNC).
3. All exposed conduits shall be RMC, unless otherwise specifically shown on the plans. All metal conduit shall be properly grounded.
4. Couplings, connectors, conduit bodies, grounding bushings, and offset nipples for RMC shall be electro-zinc plated steel or hot dipped galvanized malleable iron, threaded or threadless compression type, rain-tight and shall be UL listed for the intended use.
5. Expansion joints for metal conduit shall be provided with an internal or external bonding jumper and shall be UL listed.
6. Unless otherwise shown on the plans, junction box minimum sizes shall be in accordance with the following table which applies to the greatest number of conductors entering the box through one conduit with no more than four conduits per box. When a mixture of conductor sizes are present, the conductors shall be counted as if all are of the larger size. Situations not applicable to the table shall be sized in accordance with NEC 370-28.

AWG	3 CONDUCTORS	5 CONDUCTORS	7 CONDUCTORS
#1	10" x 10" x 4"	12" x 12" x 4"	16" x 16" x 4"
#2	8" x 8" x 4"	10" x 10" x 4"	12" x 12" x 4"
#4	8" x 8" x 4"	10" x 10" x 4"	10" x 10" x 4"
#6	8" x 8" x 4"	8" x 8" x 4"	10" x 10" x 4"
#8	8" x 8" x 4"	8" x 8" x 4"	8" x 8" x 4"

7. RMC system junction boxes equal to or smaller, in any dimension, than 12 x 12 x 6 (HxWxD), surface mounted and containing conductors #8 or larger, shall be hot dipped galvanized cast iron with minimum wall thickness of 3/16 inch, shall have external mounting lugs, and shall be UL listed Crouse-Hinds Type WAB, OZ/Gedney Type YS or approved equal. Unless otherwise shown elsewhere on the plans, RMC system junction boxes larger than the aforementioned boxes but equal to or smaller, in any dimension, than 18 x 18 x 6 (HxWxD) shall be 14-ga. stainless steel; RMC system junction boxes larger than 18 x 18 x 6 (HxWxD) shall be 12-ga. stainless steel. All metal junction boxes shall be equipped with a threaded hole or lug for grounding. Stainless steel boxes 12 x 12 x 6 and larger need not be UL Listed but shall meet the other requirements of the NEC and shall have ribs, stiffeners, or thicker metal and shall have external mounting feet. Junction boxes with an internal volume of more than 100 cu. in. may be supported by connection of two or more rigid metal conduits, where specifically shown on the plans or where approved by the Engineer.
8. Junction boxes containing only #10 or #12 AWG conductors shall be Crouse Hinds Type GRFX, Appleton Type JBOX, two-gang FD, or similar approved cast iron box. Boxes shall be sized according to NEC Table 370-16(a).
9. IMC and EMT conduit shall not be used unless specifically required by the plan layout sheets. Junction boxes in EMT conduit systems shall be made from galvanized sheeting and shall be UL listed and approved for outdoor use, unless otherwise noted on the plans. Sheet metal junction boxes shall be sized in accordance with the NEC. Junction boxes for IMC conduit systems shall meet the requirements of boxes used with RMC systems.
10. Junction boxes in PVC conduit systems shall be PVC, intended for outdoor use, unless otherwise noted on the plans.
11. Elbows in PVC conduit systems one inch and larger shall be rigid metal, with the exception of traffic signal systems which may have PVC elbows instead of rigid. If any part of the rigid metal elbow is buried less than 18 inches underground the elbow and rigid metal extension shall be grounded. Grounding shall be accomplished by means of a grounding bushing installed on the extension. Unless specifically shown on the plans, rigid metal elbows containing, or entering ground boxes containing only communications conductors, loop detectors, or other low voltage power limited circuits need not be grounded unless a ground wire is present in the conduit or ground box. The rigid metal elbows located in concrete foundations may be extended with PVC conduit and need not be grounded provided that the end of the elbow nearest the end of the conduit run exiting the foundation is at least 2 inches below the concrete. RMC elbows will not be eliminated. RMC elbows will not be paid for directly, but will be subsidiary to various bid items.
12. High-Density Polyethylene (HDPE) conduit shall meet the requirements of Item 622, Duct Cable, except that the HDPE conduit, when bid under Item 618, Conduit, shall not contain factory installed conductors. Fittings for HDPE conduit shall be UL listed as an electrical conduit connector or shall be thermally fused using an electrically heated wound wire resistance welding method. HDPE conduit may be substituted for bored schedule 40 or schedule 80 PVC conduit. When such substitution is made, bored HDPE shall be schedule 40 of the size PVC being replaced. The HDPE conduit shall transition to PVC (or RMC elbow when required) at the bore pit. Size and schedule shall be as shown on the plans. Substituted conduit may not be extended to ground boxes or foundations; RMC elbows shall be installed at ground boxes and foundations. RMC elbows will not be eliminated.
13. All conduit support hardware including straps, nuts, bolts, screws, retaining anchors and washers shall be hot dipped galvanized or stainless steel. Strut type conduit straps shall be stainless steel or hot dipped galvanized. Strut type straps need not be made of malleable type material. Stamped-cadmium plated straps will not be allowed. Straps having only one mounting hole shall not be allowed for use on conduits 2 inches and larger with the exception of electrical service poles where stainless steel standoff straps will be allowed. Two piece conduit straps designed to be used with a mounting shoe shall be installed only with the correctly sized shoe.

B. CONSTRUCTION METHODS

1. Conduit in structures shall have expansion fittings at structure expansion joints. All straight runs of RMC conduit exposed on structures such as bridges shall have expansion joints installed at maximum intervals of 150 feet. Expansion joints shall be installed so they allow for movement of the conduit. Installation of the joint in such a manner that will not allow for movement shall be repaired at no expense to the state. The method of determining the final setting length of the expansion joint shall be provided to the Engineer upon request.
2. Conduit supports shall be spaced at maximum intervals of 5 feet. Conduit spacers shall be used with metal conduit placed on surfaces of concrete structures (See conduit mounting options).
3. Conduit supports shall not be attached directly to prestressed concrete beams except as shown specifically in the plans and approved by the Engineer.
4. Unless otherwise shown on the plans, conduit placed beneath existing roadways, driveways, or sidewalks, or after the base or surfacing operation has begun, shall be accomplished by jacking or boring. The Contractor shall back fill and compact the bore pits to the bottom of the conduit prior to installing connecting conduit or duct cable to prevent bending of the connection.
5. Conduit trenched in the subgrade of new roadways shall be backfilled with excavated material, unless otherwise noted on the plans. Conduit trenched in the sub-base of new roadways shall be backfilled with cement-stabilized base.
6. Open ends of all conduit and raceways shall be fitted with temporary caps or plugs to prevent entry of dirt, debris and rodents during construction. The temporary cap may be constructed of duct tape, but in all cases shall be tightly fixed to the conduit and shall be durable. The contractor shall clean out the conduit and prove it clear in accordance with Standard Specifications Item 618.3 prior to installing any conductors.
7. Conduit entry into the top of enclosures such as safety switches, meter cans, service enclosures, auxiliary enclosures and junction boxes shall be made weatherproof using conduit sealing hubs, or threaded bosses.
8. A bonding jumper shall be installed from each grounding bushing to the nearest grounding rod, grounding lug, and/or equipment grounding conductor. All jumpers shall be the same size as equipment grounding conductor. Conduit used as casing under roadways for duct cable need not be grounded if duct extends full length through the casing. At electrical services, grounding electrode conductor shall be a solid Copper #6 AWG.
9. Metal junction boxes shall be bonded to the grounding conductor in accordance with the NEC.
10. Conduits entering ground boxes shall be placed so that the conduit ends shall be not less than 3 inches nor more than 6 inches from bottom of box (See ground box detail on sheet ED(3).
11. Conduit ends shall be sealed with heat shrink boots with waterproof sealant, urethane foam, or by other methods approved by the Engineer. Sealing shall be done after completion of any required pull tests. Duct tape shall not be used as a permanent conduit sealant. Silicone caulking shall not be used as a sealant.
12. All strut mounting material and hardware shall be hot-dip galvanized or shall be stainless steel. The cut ends of strut and non-galvanized rigid metal conduit threads shall be coated with a zinc rich paint (90% or more zinc content). Zinc rich paint may only be used to touch up galvanized material as allowed under item 445.6 galvanizing. The painting of non-galvanized material with a zinc rich paint shall not be considered as an approved alternative for galvanized materials.
13. All PVC conduit terminations shall be fitted with bushings or bell ends. All metal conduit terminations shall be fitted with a grounding type bushing.

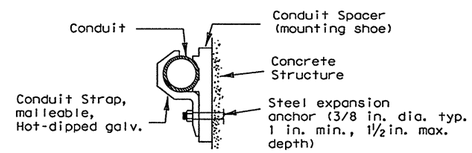

CONDUIT MOUNTING OPTIONS

(Attachment to concrete surfaces)
(See para. II.B.2)

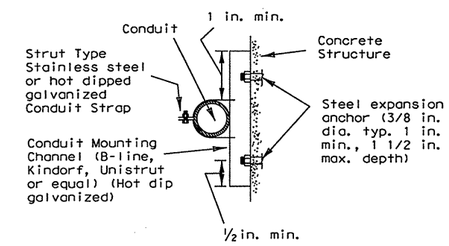

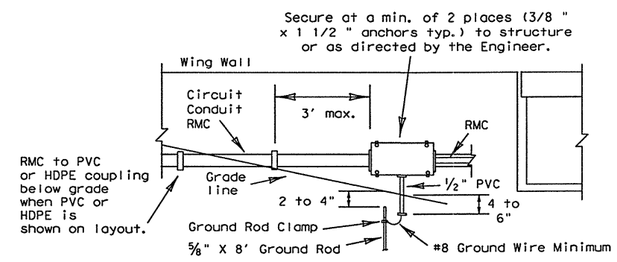

TYPICAL CONDUIT ENTRY TO BRIDGE STRUCTURE DETAIL

NOTES

1.) Ground rod clamp to be UL listed for direct burial.
2.) For conduit placed in structure, use flush-mounted box.
3.) Bond junction box and metal conduits to equipment grounding conductor and grounding electrode conductor using listed connector.
4.) Seal all conduits entering the junction box from underground.
5.) Install bell end or bushing on 1/2 " PVC conduit both ends.
6.) Ground rod to be driven within 8 inches of 1/2 inch PVC conduit end.

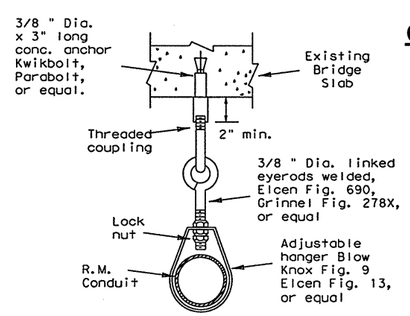

CONDUIT HANGER DETAIL

(Attachment to horizontal surfaces)
Hangers need not be UL listed for electrical use
ie: plumber pipe hangers are acceptable

5/03 Revision

Revised notes.

Texas Department of Transportation
Traffic Operations Division

ELECTRICAL DETAILS-CONDUIT

ED(1)-03

© TxDOT January 1992	DN: TXDOT		CK: TXDOT	DW: TXDOT	CK: TXDOT
REVISIONS	CONT	SECT	JOB	HIGHWAY	
4-98	0091	04	055	SH 289	
12-00	DIST		COUNTY		SHEET NO.
3-03	18		COLLIN		409
5-03					

71Δ

DISCLAIMER: The use of this standard is governed by the "Texas Engineering Practice Act". No warranty of any kind is made by TxDOT for any purpose whatsoever. TxDOT assumes no responsibility for the conversion of this standard to other formats or for incorrect results or damages resulting from its use.

I. ELECTRICAL CONDUCTORS

A. MATERIALS

1. Insulated conductors shall be NEC Type XHHW. Insulated conductors shall be color coded in accordance with the NEC, articles 200, 250, and 310; i.e. Insulation of grounded conductors (neutrals) shall be white. Grounding conductors (ground wires) shall be bare or insulation shall be green. Insulation of ungrounded conductors (hots) shall be any color except green, white, or gray. Identification of conductors #6 American Wire Guage (AWG) and smaller shall be by continuous jacket color. Color coding of electrical conductors #4 AWG and larger shall be either by continuous color jacket or by colored tape. Colored tape marker shall consist of a half-lap of tape covering a 6-inch length of conductor.
2. Where two or more circuits are present in one conduit or enclosure, the conductors of each circuit shall be identified by a permanent non-metallic tag at each accessible location. The tag shall be fastened to the conductors by two plastic straps. Each tag shall indicate circuit number, letter, or other identification shown in the plans.
3. Grounding electrode conductor #6 AWG for bonding to ground rod at electrical service, shall be solid. Connection of conductor to ground rod shall be made using UL Listed connectors designed for such purposes.
4. Heat Shrink Tape filler shall be used to seal the ends of heat shrink tubing around two or more conductors that are insulated with heat shrink tubing. Tape material shall have a minimum dielectric strength of 225 volts per mil and shall be cross-linked butyl rubber. Tape shall be supplied in rolls and shall have a backing (release paper) to prevent the tape from sticking to itself.
5. Heat shrink tubing shall be heavy wall, UL listed for 600 volts or greater and shall have factory applied internal sealant.
6. GelCaps shall be UL listed for 600-volt applications. GelCap shall have see-through elastomer molded cover. Cover shall be filled with high dielectric insulating gel silicone sealant to provide waterseal. Cover shall be held in place by snap-lock, molded clamp made of UV stable polypropylene.
7. Splicing materials, insulating materials, breakaway disconnects, GelCaps and fuse holders will not be paid for directly but shall be subsidiary to various bid items.

B. CONSTRUCTION METHODS

1. After conductors have been installed in conduit, a pull test shall be made on conductors. When any length of conductor cannot be freely pulled, the Contractor shall make any needed alterations or repairs at no expense to the State.
2. The Contractor shall perform insulation resistance tests in accordance with Item 620, "Electrical Conductors." The Contractor shall coordinate with the Engineer to witness the tests.
3. A sufficient length of conductor for making up connections shall be left in ground boxes (2 feet minimum, 3 feet maximum, to point of splice, 3 feet minimum, 4 feet maximum, when conductor is pulled through with no splice), enclosures, weatherheads and pole bases (1 foot minimum, 1.5 feet maximum).
4. Splices shall be made only in junction boxes, ground boxes, pole bases, or electrical enclosures and shall be made with listed compression or screw type pressure connectors, terminal blocks, bolted lugs, or split bolt connectors. Splices shall be insulated with heavy wall heat shrink tubing or GelCaps and shall be made so as to provide a watertight splice. Heat shrink sleeve shall overlap conductor insulation a minimum of 2 inches on both sides of the splice. Where heat shrink tubing may not shrink sufficiently to provide a watertight seal around the individual conductors, prior to heating the tubing, the Contractor shall increase the diameter of the conductors insulation using heat shrink filler tape to provide a watertight seal between the individual conductors and the heat shrink tubing. Tape shall be visible after completion of all splices. Where filler tape is used but not visible, the Engineer shall approve each individual splice by conducting a physical inspection of each splice. When it appears the tubing has been burned, or overheated the tubing shall be considered to be defective and shall be replaced.
5. GelCaps when used in place of heat shrink method of splicing, shall be sized and installed according to manufacturer's specifications. (Raychem GelCap and GelCap SL or equal.)
6. Wire nuts may be used for #8 AWG or smaller conductors in above-ground junction boxes, but not in pole bases or ground boxes. Wire nuts shall be positioned upright to prevent the accumulation of water. Wire nuts used at these locations shall have factory applied waterproof sealant.
7. Conductors in illumination poles shall be supported by a J-hook in the top of the pole.
8. All conductors bid under Item 620 "Electrical Conductors" shall have breakaway electrical disconnects installed anytime conductors pass through a break-away support device.
9. For terminating the conductors, insulation-jacketing material shall be removed in such a manner as to not nick any of the individual strands of the conductor. When individual conductor strands are removed, the conductor shall be considered to be damaged.
10. When a conductor or cable has been damaged, or fails to pass an insulation resistance test, the conductor shall be replaced.
11. Duct tape, black electrical tape, or wire nuts shall not be used in the repair of a damaged conductor.
12. For terminations, no more than one wire may be installed under a single pressure connector, unless the device is listed for more than one wire.
13. Conductors connected to break-away in line fuse holders must be installed in accordance with the specific manufacturer's installation instructions. Where threaded connections are made, they shall be properly torqued. Where crimp type connections are made, crimps shall be made using properly sized crimping pliers. Proper conductor terminations are critical to the safe operation of break-away devices.
14. Waterproofing boots shall be properly trimmed to fit snugly around the conductor so as to provide a water proof connection. No more than one wire may enter a single opening in any one boot. Water proofing boots must provide the correct number of openings. Where only one wire is to be connected to a boot, the boot may not be a two wire type.

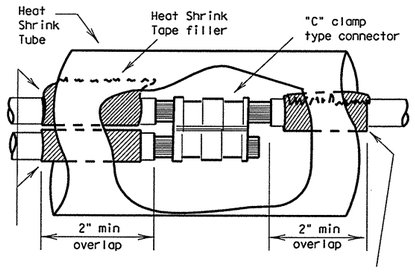

SPLICE OPTION 1

C-CLAMP

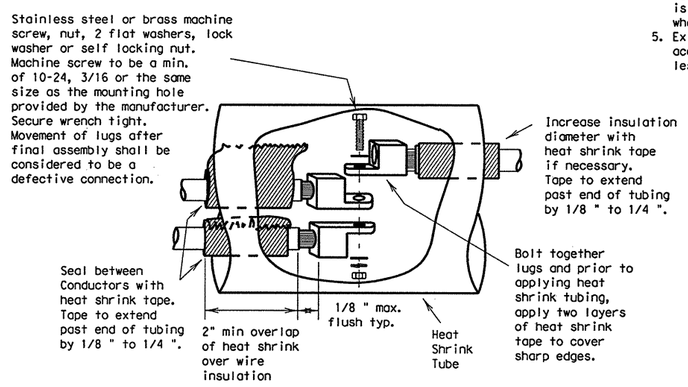

SPLICE OPTION 2

BOLTED WIRE LUGS

SPLICE OPTION 3

SPLIT BOLT

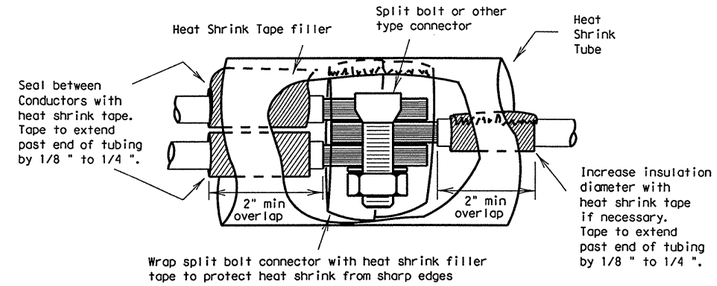

SPLICE OPTION 4

GELCAP

GelCap shall be sized and installed according to manufacturers specifications

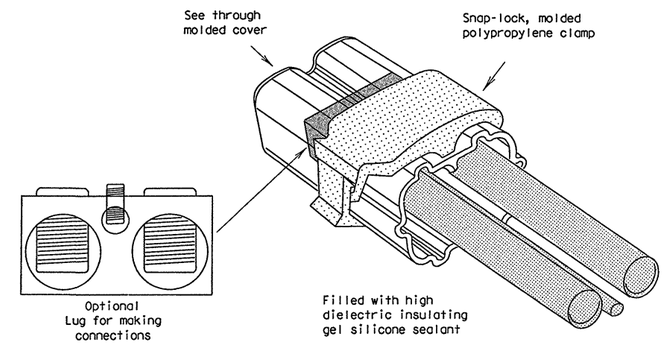

15. All conduits that contain circuit wiring of 50 volts or more shall contain an equipment grounding conductor (EGC). Conduit for traffic signals shall have an EGC, with a minimum size of #8 AWG stranded. Unless otherwise shown on the plans, the EGC for all other conduits shall be the same AWG size as the largest current carrying conductor contained in that conduit. The EGC shall be paid for item 620-Electrical Conductors.

C. TEMPORARY WIRING

1. Temporary conductors and electrical equipment to provide power for utilization equipment, shall be installed in accordance with the NEC article 305. All temporary wiring materials and methods shall comply with the standard sheets. All power outlets for portable electrical equipment, power tools, ice machines, ice storage bins and refrigerators located outdoors at grade, supplied from a utility power source, shall be provided with a ground fault circuit interrupter.
2. Residual current protective devices (GFCI) may be any one of the following: molded cord and plug set, receptacle, or circuit breaker type.
3. Where wire nuts are approved for temporary wiring, they shall be of the self-sealing type.
4. All conductor splices must be contained within a listed enclosure, ground box or the splices will be more than ten feet above grade vertically and more than five feet horizontally from any metal structure. Where temporary conductors are installed in any area that is likely to be subjected to vehicle traffic, or mobile construction equipment, the vertical clearance to ground shall be at least 18 feet when measured at the lowest point. Where power conductors are to be supported by a span wire, the span wire shall be properly grounded.
5. Existing conduit containing service conductors uncovered during the construction process shall be repaired in a timely manner in accordance with the NEC. Existing non-metallic conduit exposed during construction shall not be left exposed above grade, or with less than eighteen inches of cover, without protective methods approved by the Engineer.

Texas Department of Transportation
Traffic Operations Division

ELECTRICAL DETAILS-CONDUCTORS

ED(2)-03

©TxDOT January 1992

DN: TXDOT	CK: TXDOT	DW: TXDOT	CK: TXDOT

REVISIONS: 10-93, 4-98, 12-00, 3-03

CONT	SECT	JOB	HIGHWAY
0091	04	055	SH 289
DIST		COUNTY	SHEET NO.
18		COLLIN	410

71B

DATE: 4/4/2011 8:15:25 AM
FILE: U:\US 289, 0091-04-055\ED1-03.dgn

DISCLAIMER: The use of this standard is governed by the "Texas Engineering Practice Act". No warranty of any kind is made by TxDOT for any purpose whatsoever. TxDOT assumes no responsibility for the conversion of this standard to other formats or for incorrect results or damages resulting from its use.

II. GROUND RODS

A. MATERIALS

1. All ground rods installed at electrical services, including supplemental lightning protection ground rods specified by the plans in other locations such as pole bases, shall be copper clad and UL listed. Rods shall be a minimum diameter of 5/8 inch. The length shall be a minimum of 8 feet. Larger diameter or longer length rods may be called for in some specific locations, see the individual plans sheets.
2. Ground rod clamps shall be listed to be in direct contact with the soil. Where concrete encasement is required, the clamp shall be listed for concrete encasement.

B. CONSTRUCTION METHODS

1. Ground rods installed in locations such as pole bases, to provide supplemental lightning protection need not be totally in contact with the soil. Where called for in the plans, rods may be encased in soil or concrete or any combination of soil and concrete. When concrete encased, the connection of the conductor to the rod shall be readily accessible for inspection or repairs. When driven into the soil the upper end shall be between 2 to 4 inches below finished grade. Ground rods shall not be placed in the same drilled hole as a timber pole.
2. Ground rods shall be installed such that the end imprinted with the rod's part number is installed as being the upper end.
3. Non-conductive coatings such as concrete splatter shall be removed from the rod at the clamp location.
4. Routing of lightning protection ground rod wires shall be run as short and straight as possible. Where bends are required they shall have a minimum radius of four inches.
5. Unless specifically called for by the plans, conduits used for ground rod wires shall be non-metallic. Where metal conduits are specified, a grounding bushing and properly sized bonding jumper shall be provided and properly installed on each end.
6. Where rocky soil or a solid rock bottom is encountered when driving a ground rod and the horizontal trench placement method is the only viable solution, written authorization from the Engineer must be obtained.

III. GROUND BOX

A. MATERIALS

1. Ground boxes 16x30x24 inches (WxLxD) or smaller shall be polymer concrete of the type required by the descriptive code shown elsewhere. Larger ground boxes shall be as shown elsewhere in the plans.
2. All ground boxes and covers shall be permanently marked either by impress or by permanent ink, with manufacturer's model number and manufacturer's name or logo.
3. Covers shall be bolted down, and bolt holes in the box shall be arranged to drain dirt.
4. Ground box Types A, B, C, D & E shall meet the following requirements:
   a. Ground boxes and covers be manufactured from polymer concrete reinforced with continuous strands of woven or stitched borosilicate fiberglass cloth. The polymer concrete shall be made from catalyzed polyester resin, sand and aggregate, and shall have a minimum compressive strength of 11,000 psi. Polymer concrete containing chopped fiberglass or fiberglass reinforced plastic is not acceptable.
   b. Minimum inside dimensions shall be as follows (width x length x depth):
      Type A shall be 11.5 inches x 21 inches x 10 inches, (122311)
      Type B shall be 11.5 inches x 21 inches x 20 inches, (122322)
      Type C shall be 15.25 inches x 28.25 inches x 10 inches, (162911)
      Type D shall be 15.25 inches x 28.25 inches x 20 inches, (162922)
      Type E shall be 11.5 inches x 21 inches x 16 inches, (122317)
   c. Bottom edge of box or extension shall be footed with a minimum 1 1/4 inch flange.
   d. Ground boxes shall withstand 600 lbs. per sq. ft. applied over the entire sidewall with less than 1/4 inch deflection per foot length of box. Ground boxes and covers shall withstand a test loading of 20,000 lbs. over a 10 inch by 10 inch area centered on the cover with less than 1/2 inch deflection. Ground boxes and covers shall meet Western Underground Standards 3.6. Manufacturer shall supply certification by an independent laboratory or sealed by a Texas-Licensed Professional Engineer.
   e. Covers shall be 2 inch (nominal) thick polymer concrete. All hardware shall be stainless steel. Cover shall be secured with two 1/2 inch stainless steel bolts. Bolts shall be self-retaining and shall withstand a minimum of 70 ft-lbs. torque and shall have a minimum 750 lbs. straight pull out strength. Nuts shall be floating and shall provide a minimum of 1/2 inch movement from the center of the nut. Covers shall be skid resistant, minimum 0.5 coefficient of friction. Covers shall be interchangeable between manufacturers and shall conform to the dimensions shown herein. Unless otherwise approved by the Engineer, cover shall be legibly imprinted with the following words in minimum 1 inch letters:
      Ground Boxes containing wiring for traffic signals shall be labeled, Danger High Voltage Traffic Signal.
      Ground boxes containing wiring for illumination systems shall be labeled, Danger High Voltage Illumination.
      Ground boxes containing wiring for traffic management systems shall be labeled, Danger High Voltage Traffic Management.
      Ground boxes containing wiring for sign illumination systems shall be labeled, Danger High Voltage Sign Illumination.
      Ground boxes containing wiring for traffic signals that also contain illumination, powered by the signal electrical service, shall be labeled, Danger High Voltage Traffic Signal.

B. CONSTRUCTION METHODS

1. Ground boxes shall be set on a 9 inch (minimum) bed of aggregate from 3/4 " up to 2" in size. Aggregate shall be in place prior to setting box and conduits shall be capped. Any gravel or dirt in conduit shall be removed.
2. When required by Item descriptive code, construction of an apron encasing a ground box including concrete and reinforcing steel shall not be paid for directly but shall be subsidiary to the ground box. Reinforcing steel may be field bent. Concrete for aprons shall be considered miscellaneous concrete for testing purposes. Aprons shall be cast in place.
3. Conduit holes may be cut in the walls of type B & D boxes at least 18 inches beneath the cover.
4. If, within the limits of this project, the Contractor must utilize an existing ground box equipped with a metal cover, the Contractor shall bond the cover to the grounding conductor with a 3 foot long flexible stranded jumper the same size as the grounding conductor. Connection of bonding jumper to metal ground cover shall not be paid for directly but shall be subsidiary to various bid items. The box(es) must be clearly shown on the plans with plan notes fully describing the work required.
5. If there are other ground boxes with metal Covers within the project limits but not involved in the contract, the Engineer may direct the Contractor to ground the covers, designating and identifying the specific boxes in writing. This work will be paid for separately.
6. Termination to metal ground box covers shall be made using a tank ground type lug.

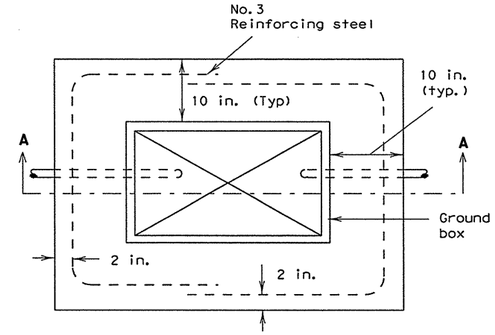

PLAN VIEW

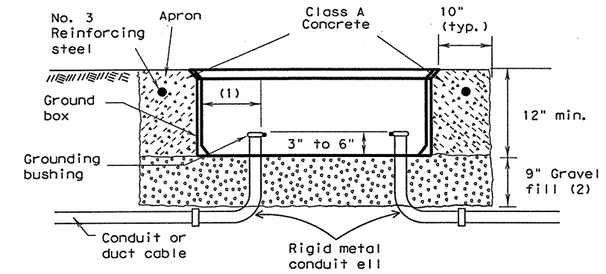

SECTION A - A

APRON FOR GROUND BOXES

(Where required)

(1) Final position of end of conduit shall not exceed one-half the distance to the side of box opposite the conduit entry.
(2) Place gravel "under" the box. not "in" the box. Gravel should not encroach on the interior volume of the box.
(3) Install bushing on the upper end of all ells.
(4) Where a ground rod is present in the ground box, connect it to any and all equipment grounding conductors using a listed connector.
(5) Maintain sufficient space between all conduits so as to allow for proper installation of bushings.
(6) All conduits shall be installed in a neat and workmanlike manner.
(7) All conduits installed in the ground box shall be sealed after completion of conductor installation and any required pull tests. Silicone shall not be used as sealant.

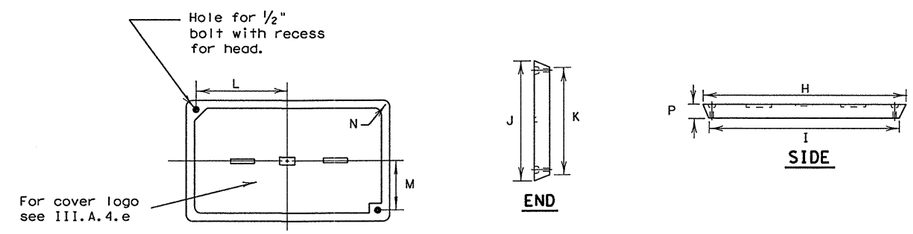

PLAN VIEW

END

SIDE

GROUND BOX COVER

GROUND BOX COVER DIMENSIONS								
BOX	DIMENSIONS (INCHES)							
SIZE	H	I	J	K	L	M	N	P
A, B & E	23 1/4	23	13 3/4	13 1/2	9 7/8	5 1/8	1 3/8	2
C & D	30 1/2	30 1/4	17 1/2	17 1/4	13 1/4	6 3/4	1 3/8	2

5/03 Revision

1 Revised notes.

Texas Department of Transportation
Traffic Operations Division

ELECTRICAL DETAILS- GROUND BOXES

ED(3)-03

© TxDOT January 1992

DN: TXDOT	CK: TXDOT	DW: TXDOT	CK: TXDOT

REVISIONS: 4-98, 12-00, 3-03, 5-03

CONT	SECT	JOB	HIGHWAY
0091	04	055	SH 289
DIST		COUNTY	SHEET NO.
18		COLLIN	411

DATE: 4/4/2011 8:15:29 AM
FILE: U:\US 289, 0091-04-055\ED1-03.dgn

DISCLAIMER: The use of this standard is governed by the "Texas Engineering Practice Act". No warranty of any kind is made by TxDOT for any purpose whatsoever. TxDOT assumes no responsibility for the conversion of this standard to other formats or for incorrect results or damages resulting from its use.

ELECTRICAL SERVICES NOTES

All work, materials, services, and incidentals, whether or not specifically shown on the plans, which may be necessary for a complete and proper electrical service installation as specified in the plans to obtain electrical power shall be paid for, performed, furnished and installed by the Contractor. The Contractor shall contact the Utility for metering and shall comply with all Utility requirements.

Primary line extensions, connection charges, meter charges, and other charges by the Utility company to provide power to the location shown, when required, shall be paid for under force account work. The costs associated with these charges shall be approved by the Engineer prior to engaging the Utility company to do the work. The Contractor shall consult with the appropriate Utility to determine costs and requirements, and shall coordinate the Utility's work as approved by the Engineer. The Contractor shall be reimbursed only the amount billed by the Utility. No additional amount for supervision of the Utility's work will be paid.

Materials shall be new and unused, materials and installation shall comply with the applicable provisions of the National Electrical Code (NEC) and National Electrical Manufacturers Association (NEMA) standards and shall be Underwriters Laboratories (UL) Listed. Electrical Service conduits, conductors, disconnects, contactors, circuit breaker panel sizes, and branch circuit breakers, shall be as shown in the Electrical Service Data elsewhere in the plans. Faulty fabrication or poor workmanship in any material, equipment, or installation shall be justification for rejection.

The Contractor shall submit for approval no less than six (6) copies of catalog cut sheets on electrical service materials. Submittals shall be legible and shall be marked to indicate which product on a cut-sheet is to be supplied. Where manufacturers provide warranties and guarantees as a customary trade practice, Contractor shall furnish to the State such warranties or guarantees.

The Contractor shall provide locks keyed with Master #2195 for all lockable electrical enclosures. Keys and locks become property of the State. Unless otherwise approved by the Engineer, enclosures shall not be energized until locks are provided and all bolts are installed.

Circuit directories, where provided, shall be filled out. All breakers and components in shop built panels and enclosures shall be labeled with duo-colored plastic labels. Letters shall be a minimum 3/8 " in height.

Enclosures with external disconnects that de-energize all equipment inside the enclosure, need not have dead front trim, except that incoming line terminations shall be protected from incidental contact.

When galvanized is specified for nuts, screws, bolts or miscellaneous hardware, stainless steel may be used. All wiring and components shall be rated for 75 degrees C. Minimum size for service entrance conductors shall be #6 XHHW.

I. Safety Switch. A safety switch, placed ahead of the meter, shall only be used when specified by the Utility and when shown on the Electrical Service Data. The switch shall be UL Listed, heavy duty type, 600 volt, unfused, with a UL type 3R enclosure and equipped with a solid neutral (s/n) assembly. The switch shall be padlockable in the "on" position.

II. Service Type. Electrical service types A, C, D, and T shall be as schematically detailed on ED(4) or ED(5). Other service types shall be as detailed elsewhere on the plans.

III. Branch Circuit Breakers. Circuit breakers shall be thermal magnetic and have a minimum interrupting capacity of 10,000 amps and a voltage rating compatible with their use. Circuit breakers shall be sized as shown in the electrical service data. Circuit breakers in panelboards and load centers shall be full size and designed exclusively for the panelboard or load center in use. Tandem and half-width breakers shall not be used. All circuit breakers shall be permanently and clearly marked identifying the circuit or device supplied. Circuit breakers shall be UL Listed to UL489.

IV. Circuit Breaker Panelboard. Panelboards shall be UL Listed. Panelboards shall have copper busses, a minimum of 6 one-pole spaces or as required in the electrical service data, and when required will be rated for service equipment. Enclosure shall meet or exceed UL type 3R classification. Panelboards shall have a threaded hub conduit entry for conduit entering the top of the enclosure. Circuit breakers shall be bolt-in type only.

V. Circuit Breaker Load Center. Load centers shall be UL Listed.
Load centers for type T services may have copper or aluminum busses, all other load centers will be copper bus only. Load center will have a minimum of 4 one-pole spaces, and shall be rated for service equipment. Enclosure shall meet UL type 3R classification. Load centers shall have a threaded hub conduit entry for conduit entering the top of the enclosure. Circuit breakers shall be plug-in type only. Load centers for type T services shall accomodate a maximum of 6 one-pole breakers.

VI. Separate or Auxiliary Enclosure. Separate enclosures for HOA, photocell and lighting contactors for types D & T Services shall be a UL Listed assembly with outer door. Interior shall have dead front trim. HOA switch operator shall extend through the dead front trim. Photocell shall be mounted inside the enclosure as described in paragraph XIII when required by descriptive code. Separate enclosures shall meet the construction requirements of paragraph VIII. E, except that separate enclosure shall not have external operating handle, need not have a data pocket and door may latch at only one point. All equipment may be located in one enclosure instead of two, when approved by the Engineer.

VII. Where a Type D or T service is provided, laminated "as built" drawings are required as shown on ED(5) VIII E; shall be delivered before completion of the work, to the Engineer in lieu of placement within these smaller enclosures. Conduit may not enter the back wall of a service enclosure penetrating the equipment mounting panel. Provide grounding bushings on all metal conduits, terminate bonding jumper to grounding bus. Grounding bushing is not required when the end of the metal conduit is fitted with a conduit sealing hub or threaded boss such as a meter base.

EXPLANATION OF ELECTRICAL SERVICE DESCRIPTIVE CODE

ELEC SERV TY X (XXX/XXX) XXX (XX) XX (X) XX (X)

Example: ELEC SERV TY A(240/480)100(NS)SS(E)GC(O)

Schematic Type

Service Voltage (V / V)

Disconnect Amp Rating
(000 indicates main lug only)

SS= Safety switch ahead of meter
NS= No switch ahead of meter and/or no meter required

Enclosure Type
GS= Galvanized steel (see ED(5)VIII,D)
SS= Stainless steel
AL= Aluminum

Photocell Mounting Location
T= Top of pole
E= Inside service/separate enclosure
L= Luminaire mounted
N= None

Service Support Type
GC= Granite concrete
OC= Other concrete
TP= Timber pole
SP= Steel pole
SF= Steel frame
OT= Pole by others or paid for separately
EX= Existing pole
TS= Switch gear to be placed on traffic signal pole
RT= Rectangular structural tubing
PS= Pedestal Service (see ED(5)VIII,G)

O= Overhead service
U= Underground service

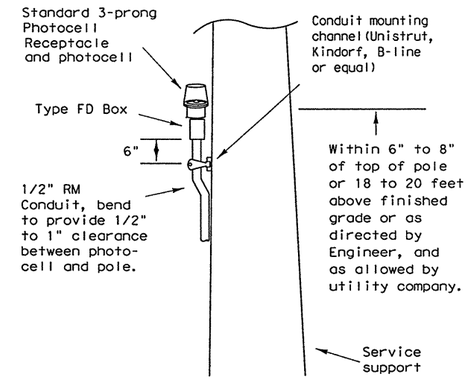

TOP MOUNTED PHOTOCELL

Conduit support spacing 3 feet from enclosure; 5 feet max.

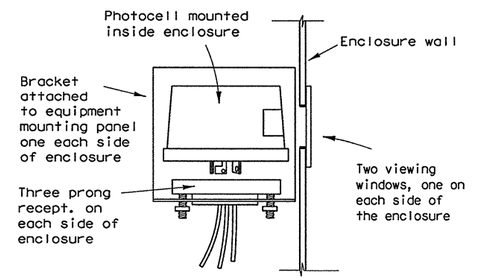

ENCLOSURE MOUNTED PHOTOCELL

For photocell specifications see ED(5),XIII.

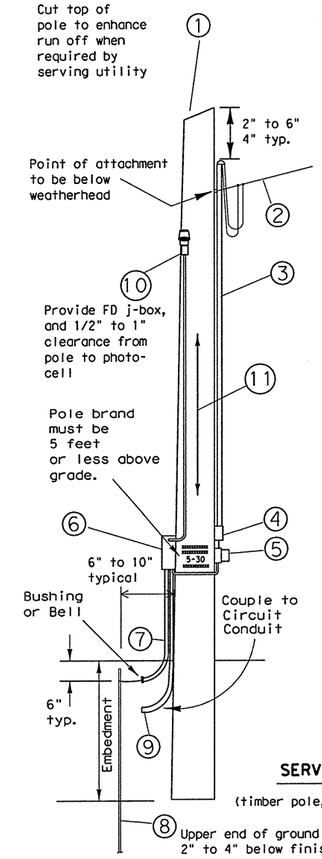

1 - Class 5 pole, height as required
2 - Service drop from utility company (attached below weatherhead)
3 - Service conduit and service entrance conductors (RMC) (See Electrical Service Data)
4 - Safety switch (when required)
5 - Meter (when required)
6 - Service enclosure
7 - No. 6 bare grounding electrode conductor in 1/2 " PVC to ground rod - extend 1/2 " PVC 6" underground.
8 - 5/8 " x 8' Copper clad ground rod - drive ground rod completely underground unless otherwise approved by the Engineer.
9 - RM conduit - same size as branch circuit conduit.
10 - Photocell and conduit - if top mounted. (See Electrical Service Data)
11 - When required by the serving utility provide bare #6 awg copper conductor. Run wire from pole top to butt wrap or copper butt plate. Protect conductor to a height of 8 ft above finish grade.

LIQUIDTIGHT FLEXIBLE METAL CONDUIT (LFMC)

(If applicable)

- Liquidtight flexible metal conduit, may be used when meter and service enclosure are mounted 90 to 180 degrees to each other. Size shall be same as service entrance conduit.
- LFMC shall not exceed 3 ft. and shall be securely supported within one ft. of each end. No strap required for LFMC shorter then 12"
- Each end of LFMC must have a grounding bushing or be terminated with a grounding fitting.
- A neutral conductor must be installed within the LFMC.
- Bend in liquidtight flexible metal conduit shall not exceed 180 degrees.
- A pull test is required on all installed conductors, at least six inches of free conductor movement shall be demonstrated to the satisfaction of the Engineer.

SERVICE SUPPORT TYPE TP (O)

(timber pole, overhead service, typical arrangement)

TIMBER POLE NOTES

1. Conduit and electrical conductors attached to the electrical service pole and underground within 12 inches of service pole shall not be paid for directly but shall be subsidiary to the service pole.
2. Pole top mounted photocell, install on north side of pole or in service enclosure as required. See Electrical Service Data.
3. Attach meter and service equipment with stainless steel or galvanized channel (Unistrut, Kindorf, or equal). Gain pole as required to provide flat surfaces for each strut. Paint ends of galvanized channel with zinc rich paint. Gain depth 5/8" max. Gain height 1 7/8" max. Strut to be 1" max. deep, and 1 5/8" wide max. Secure each strut section to timber pole with two galvanized or SS lag bolts, 1/4" diameter min. by 1 1/2" length min. Place flat cut galvanized or SS washer on each lag bolt. Gain pole in a neat and workmanlike manner.
4. Embedment depth shall be as required in Item 627 Treated Timber Poles.
5. Poles trimmed for excess length shall be trimmed from the top end only.

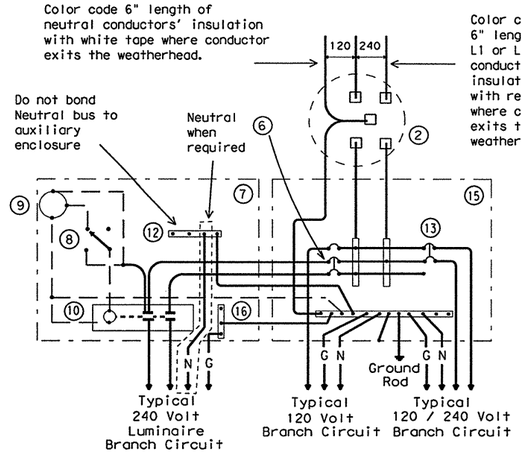

SCHEMATIC TYPE T

120/240 VOLTS - THREE WIRE

Install photocell and lighting contactor when shown on Electrical Service Data.

SCHEMATIC LEGEND

1 - omitted
2 - Meter (when required)
3 - Service Assembly Enclosure
4 - Main Disconnect Breaker (Not Used)
5 - Omit
6 - Circuit Breaker, 15 Amp typical for control circuit wiring
7 - Auxiliary Enclosure
8 - Control Station ("H-O-A" Switch)
9 - Photo Electric Control (enclosure-mounted shown)
10 - Lighting Contactor
11 - Power Distribution Terminal Blocks (Not Used)
12 - Neutral Bus required when 120 v. lights are controlled by lighting contactor
13 - Branch Circuit Breaker (See Electrical Service Data)
14 - Circuit Breaker Panelboard (Not Used)
15 - Load Center
16 - Ground Bus

——— Power Wiring
- - - - Control Wiring
—N— Neutral Conductor (when required-to serve 120 v. loads only)
—G— Equipment grounding conductor-always required

Texas Department of Transportation
Traffic Operations Division

ELECTRICAL DETAILS- SERVICE SCHEMATICS AND SUPPORT-TYPE TP (OVERHEAD)

ED(4)-03

©TxDOT April 1998

DN: TXDOT	CK: TXDOT	DW: TXDOT	CK: TXDOT

REVISIONS 12-00, 3-03

CONT	SECT	JOB	HIGHWAY
0091	04	055	SH 289

DIST	COUNTY	SHEET NO.
18	COLLIN	412

710

DATE: 4/4/2011 8:15:43 AM
FILE: U:\US 289, 0091-04-055\ED4-03.DGN

R-201104-01

DISCLAIMER: The use of this standard is governed by the "Texas Engineering Practice Act". No warranty of any kind is made by TxDOT for any purpose whatsoever. TxDOT assumes no responsibility for the conversion of this standard to other formats or for incorrect results or damages resulting from its use.

SERVICE ENCLOSURE NOTES

VIII. Service Assembly Enclosures. All service assemblies and enclosures shall be UL Listed for the intended purpose.

A. Shop built or shop assembled service assemblies (all types except Type T and Type D without lighting contactor or enclosure mounted photo cell) and all auxilliary equipment enclosures mounted with service equipment and paid for as part of Item 628, "Electrical Services", shall be built or assembled by a UL Listed Industrial Control Panel shop and shall have a unique serial numbered UL Label with the words "LISTED ENCLOSED INDUSTRIAL CONTROL PANEL". The same or an additional label shall have the name, location, and phone number of the shop, the UL file number of the shop, the shop order or drawing number, date of manufacture or assembly, and the line voltage. The service assembly enclosure shall also be labeled "SUITABLE ONLY FOR USE AS SERVICE EQUIPMENT".

B. Conduit entries into the top of enclosures shall have threaded hub. Conduit entries through the equipment mounting back plate will not be allowed.

C. All service enclosure front doors shall be permanently labeled "DANGER HIGH VOLTAGE". Label shall be a self sticking type, intended for outdoor installation. Lettering style, layout and colors of red, black and white shall be as required by OSHA. Label letters shall be 1 to 1 1/2 inches high or as high as the enclosure door width will permit for smaller services. Separate or auxiliary lighting enclosures need not be OSHA labeled when mounted in the same viewing plane as the service enclosure front door. Where only one type of load is served by the service, the service door shall be marked using duo-colored plastic labels or self adhesive vinyl weather resistant labels, minimum of 1 inch high; applied in a neat and workmanlike manner. On the label will be the service number shown on the plans as well as identifying the load served specifically (i.e. lighting, landscaping, signals, traffic management or other wording as directed by the Engineer). Safety switches need not be OSHA labeled unless specifically required by the serving utility.

D. Type GS enclosures will only be allowed for service Types D and T without an enclosure mounted photocell and/or lighting contactor and the Type C panelboard. This spec will allow an "off the shelf" product meeting these specifications to be used. Type GS enclosures shall be made from pre-galvanized steel sheeting, hot dipped galvanized steel, or powder coat painted steel unless shown differently on the plans. Steel enclosures shall be painted inside and outside; galvanized enclosures may be painted. Unless otherwise approved by the Engineer, painted enclosures shall be gray, beige, white or light green. Panelboard/loadcenter enclosures shall meet UL type 3R requirements, shall have a dead front trim, and an outer padlockable door preventing unauthorized persons from operating contained equipment. Galvanized steel is no longer allowed for Types A,C,or custom-built D or T enclosures. If GS is shown in the descriptive code for any of these, an AL shall be provided.

E. Type AL enclosures for service Types A and C shall meet UL type 3R requirements and shall also meet additional requirements of this paragraph. The enclosure shall have both a main disconnect remote operator handle and a door latch handle. Die-cast handles are not acceptable. The main disconnect remote operator shall be flange-mounted, shall interlock the door when in the "on" position, and shall be padlockable in both the "on" or "off" positions. Door latch shall latch at two or more points, operate by a handle separate from disconnect switch and be capable of being locked. Door closure clamps will not be allowed. Lock must be keyed to Master #2195. All the enclosures shall have either a continuous stainless steel piano hinge with stainless steel pin or enclosures less than 30 inches may have two heavy duty hinges, those over 30 inches must have three. Heavy duty two and three point hinges shall have a 0.185 inch minimum diameter electro-zinc plated steel pin or a stainless steel pin. Two point hinged doors shall be rated for 56 lbs of loading. Three point hinged doors shall be rated for 70 lbs of loading. The door shall have an attached data pocket constructed of either thermoplastic or metal. Pocket shall be 12" x 12", unless that size will not fit in enclosure. The pocket shall then be as large as possible, as approved by the Engineer, and mechanically attached with stainless steel nuts and bolts, or stainless steel or aluminum rivets. Enclosure shall include an equipment mounting panel installed inside the enclosure on collar studs or tapped bosses, and constructed of a minimum 12 guage galvanized steel. Equipment mounting panels shall not be painted. Enclosure shall have factory installed external mounting feet. Enclosure door shall be capable of opening at least 130 degrees, with arm or other approved means to hold the door open. Only the enclosure exterior will be primed and painted. Paint color shall be beige or gray and shall be powder coat paint as shown below. Condensation drainage shall be provided in the bottom of the enclosure before leaving the factory. The Contractor shall prepare and submit a schematic drawing unique to an individual service. The approved drawing shall be laminated and placed in the document pocket of the service at the time of shipment to the job site. All applicable wiring diagrams and plan sheet layouts for all equipment and branch breaker circuits supplied by that service shall also be laminated and placed in the document pocket prior to shipping. Type AL enclosures for Type D and T services with enclosure mounted photocell and/or lighting contactor shall have the loadcenter interior mounted in an enclosure with properly adopted dead front trim. Types D and T shall not have a loadcenter exterior "can" mounted inside another enclosure meeting these specifications. (Do not put one enclosure inside another enclosure). Types D and T with enclosure mounted photocell and/or lighting contactor shall meet the additional requirements of this paragraph except that remote-operating handle will not be provided.

F. Type SS enclosures for Type A and C shall meet all the requirements above for their respective type AL. Type SS enclosures for D and T shall meet all the requirements above for their respective type AL. Stainless Steel shall not be painted.

G. PS enclosure shall be as detailed and specified on ED(8). Galvanized steel will not be allowed for any pedestal service. If GS is shown in the descriptive code an AL will be provided.

IX. Powder Coat Paint. Powder coating shall be either a polyester thermosetting resin, a zinc rich primer with a TGIC (triglycidyl isocyanurate) powder overcoating, or a zinc-rich epoxy powder, applied by either electrostatic spray or fluidized bed immersion, high temperature oven cured, high density, low gloss, 4 mil thick (minimum), coating. Adhesion shall meet the 5A or 5B classifications of ASTM D3359. Finish shall be uniform in appearance and free of scratches.

X. Main Disconnect. Main disconnect device shall be a circuit breaker, as specified in the Electrical Service Data, shall be two or three pole, and rated for the voltage and amperage specified. Circuit breaker shall be an UL Listed thermal-magnetic circuit breaker controlled by flange-mounted remote operator in the service assembly enclosure when required. Circuit breakers shall have a minimum interrupting rating of 10,000 Amps. When the utility company provides a transformer larger than 50 KVA, Contractor shall verify that the available fault current is less than the circuit breaker amps interrupting capacity (AIC) rating and shall provide documentation from the Utility to the Engineer. Documentation shall be submitted at the same time as other electrical submittals. Circuit breaker shall be UL Listed to UL489. No backfed breakers will be allowed for use as a main disconnect.

XI. Control Circuit. Control circuit protection shall be 15 amp circuit breaker.

XII. Control Station ("H-O-A" Switch). Control station shall be a maintained-contact, three position selector switch in an UL type enclosure. Switch shall be rated 600 volts and shall be fitted with "Hand-Off-Auto" legend.

XIII. Photo Electric Control. Photo electric control shall consist of a photocell, internal lightning arrester, and relay or bimetallic switch mounted inside a weatherproof enclosure with standard 3-prong twist lock photocell plug and receptacle. The enclosure shall be made of poly-acrylic with clear acrylic window. Enclosure chassis shall be molded thermosetting plastic. The photocell shall have a polyethylene gasket, and shall have a hermetically sealed cadmium sulfide cell. The arrester shall have an enclosed type expulsion arrester rated 2.0 kV sparkover with 5,000 amps follow-through. Relay or switch shall be time delay type with normally closed contacts. Photo electric control shall be rated a minimum of 1800 VA, voltage as required. Enclosure mounted photocells shall be the same as above except that the photocell shall be mounted inside the enclosure. The enclosure shall have two acrylic paned windows, or other material approved by the Engineer, one on each side of the enclosure. Each window shall be rectangular approximately one inch by two inches, round 2 inch diameter, or as otherwise approved by the Engineer. Bracket and photocell's receptacle will be mounted inside enclosure next to each window. Except for window side, 2" of clearance is required on all sides of photocell for ease of replacement. The photocell's receptacle is held in place by two mounting screws on bracket and located next to each window of the enclosure. The 3-prong twist lock photocell shall be mounted in a position to receive light from the window closest to the photocell. The photocell shall be mounted in a position to receive light from one window. Top of pole mounted photocells shall be mounted as shown on ED(4). The Contractor shall be responsible for proper operation of the photo-electric control. The Contractor shall move and/or adjust or shield the photocell from stray or ambient nighttime light or shall make any other adjustments required for proper operation. The photocell shall face North when practicable. Unless otherwise shown on the plans, the photocell shall turn on the illumination system at 1.0 +(-) 0.5 footcandle and turn off the illumination system at two footcandles higher than turn on.

XIV. Lighting Contactor. Lighting contactor shall be a UL Listed NEMA rated lighting contactor, two-pole or multipole as required, electrically held type designed to control high pressure sodium lighting loads, with silver alloy double break contacts rated at 240 volts, 480 volts or 600 volts as required. Lighting contactor shall not be the DIN rail mounted type.

XV. Power Distribution Terminal Blocks. Power distribution terminal blocks shall be rated for 600 volts and shall be used for line side connections to branch circuit breakers where more than one circuit breaker is required. Lugs on blocks shall be properly sized for conductors being used. Only one conductor shall be placed under each lug.

XVI. Neutral/Ground Bus. Neutral/ground bus shall be a factory made bus permanently bonded to the enclosure with properly sized lugs for grounding and neutral conductors.

SCHEMATIC LEGEND

1 - Safety Switch (when required)
2 - Meter (when required)
3 - Service Assembly Enclosure
4 - Main Disconnect Breaker (See Electrical Service Data)
5 - Omit
6 - Circuit Breaker, 15Amp
7 - Auxiliary Enclosure
8 - Control Station ("H-O-A" Switch)
9 - Photo Electric Control (enclosure-mounted shown)
10 - Lighting Contactor
11 - Power Distribution Terminal Blocks
12 - Neutral/Ground Bus
13 - Branch Circuit Breaker (See Electrical Service Data)
14 - Circuit Breaker Panelboard (See Electrical Service Data) (If Type C is shown as AL or SS on descriptive code, this is the service assembly enclosure only. Panelboard enclosure is GS unless otherwise noted.
15 - Load Center

——— Power Wiring
– – – Control Wiring
—N— Neutral Conductor (when required) serve 120 v. loads only)
—G— Equipment grounding conductor-always required

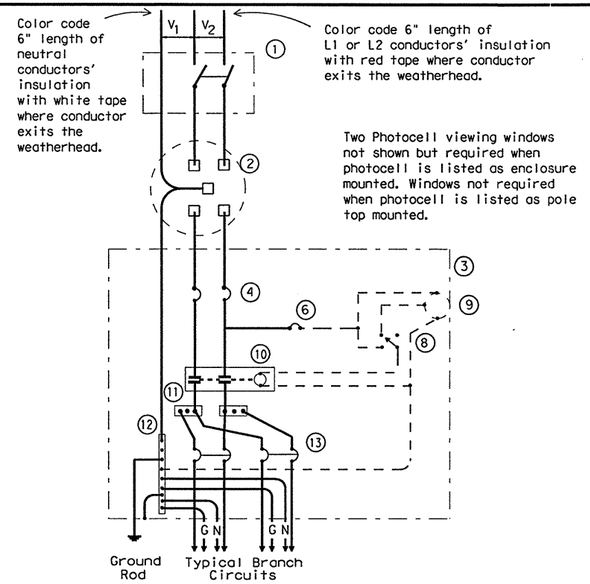

SCHEMATIC TYPE A

THREE WIRE

[Maximum feeder circuit size (High Mast Poles): 100 amps for two pole 480V, 125 amps for one or two pole 120V or 240V. Maximum branch circuit size: 50 amps.]

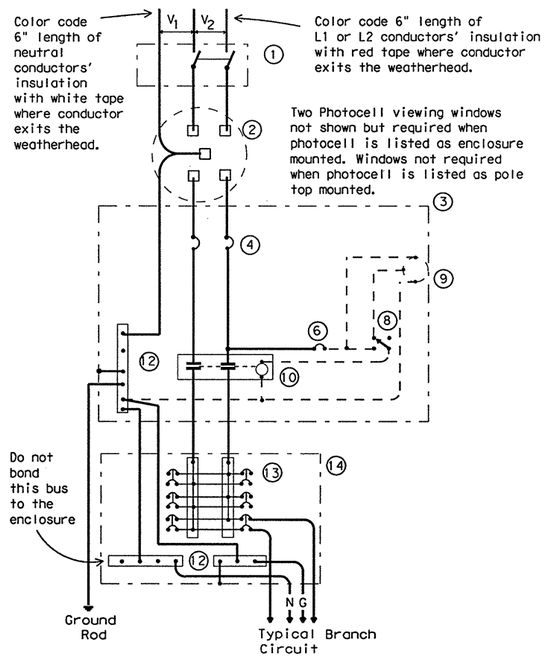

SCHEMATIC TYPE C

THREE WIRE

[Maximum feeder circuit size (High Mast Poles): 100 amps for two pole 480V, 125 amps for one or two pole 120V or 240V. Maximum branch circuit size: 50 amps.]

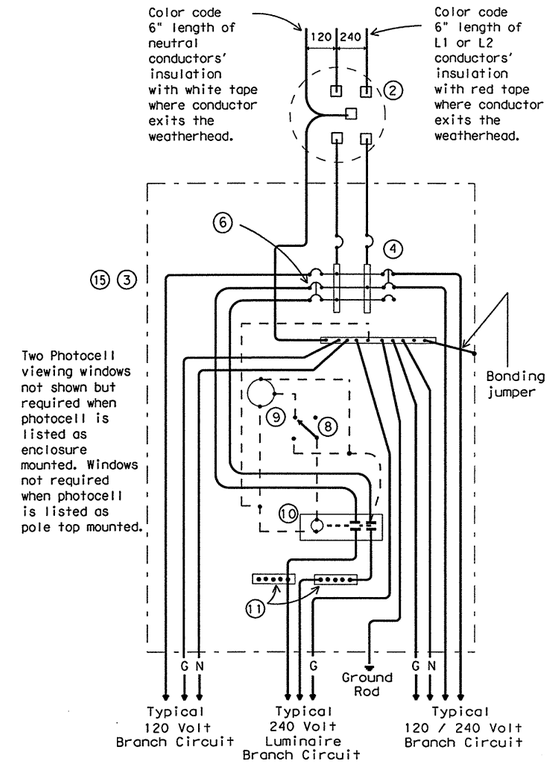

SCHEMATIC TYPE D

120/240 VOLTS - THREE WIRE

[Install photocell and lighting contactor when shown on Electrical Service Data. See Type D service notes.]

TYPE D SERVICE NOTES

Photocell and lighting contactor shall be located either in the same UL type 3R enclosure with load center or, if approved by Engineer, in separate enclosure. There shall be a window on each side of enclosure to allow operation of photocell. Both photocell contactor and breaker area shall have dead front trim. Enclosure, except for RT and PS supports, shall not exceed 36 inches in height or 16 inches in width unless approved by the Engineer. Ty D load center with lighting controls or TY D separate lighting control enclosure shall have power distribution blocks for a minimum of 4, #8 conductors per phase.

Texas Department of Transportation
Traffic Operations Division

ELECTRICAL DETAILS- SERVICE ENCLOSURE & NOTES

ED(5)-03

©TxDOT April 1998	DN: TXDOT	CK: TXDOT	DW: TXDOT	CK: TXDOT	
12-00 REVISIONS 3-03	CONT	SECT	JOB	HIGHWAY	
	0091	04	055	SH 289	
	DIST		COUNTY		SHEET NO.
	18		COLLIN		43

71F

DATE: 4/4/2011 8:15:46 AM
FILE: U:\US 289, 0091-04-055\ED4-03.DGN

DISCLAIMER: The use of this standard is governed by the "Texas Engineering Practice Act". No warranty of any kind is made by TxDOT for any purpose whatsoever. TxDOT assumes no responsibility for the conversion of this standard to other formats or for incorrect results or damages resulting from its use.

NOTES:

1. Luminaire conductors shall not be looped through controller cabinet.
2. Electrical system to include an equipment grounding conductor noted here as "G". All exposed metal parts are to be bonded to grounding conductor.
3. Photocell, when required, shall be mounted at top of pole or in enclosure as shown on ED(4) and ED(5) and as required by descriptive code.
4. Roadway lighting fixtures, when required, shall be in accordance with the material and construction methods of the Item, "Roadway Illumination Assemblies" except for the test period for proper operation of the luminaires. Installed roadway lighting luminaires and internally lighted street name signs shall be tested for proper operation as a part of the associated traffic signal system.
5. Internally lighted street name signs (ILSN), when required, shall be in accordance with the Item "Internally Lighted Street Name Signs". Because of the electrical isolation of ILSN hinges, a #12 green grounding conductor shall be run to the ILSN fixture.
6. Install ground rod at alternate location when directed by the Engineer. Maintain a minimum of 8 ft in contact with the earth.
7. Liquidtight flexible metal conduit (LFMC), may be used when meter and service enclosure are mounted 90 to 180 degrees to each other. LFMC shall be same size as service entrance conduit. LFMC shall not exceed 3 ft. and shall be securely supported within one foot of each end. No strap required for a LFMC shorter than 12". Each end of LFMC must have a grounding bushing or be terminated with a grounding fitting. A neutral conductor must be installed within the LFMC. Bend in liquidtight flexible metal conduit shall not exceed 180 degrees.
8. Minimum embedment depth as per Item 627 Treated Timber Poles.
9. Pole to be set plumb.
10. Back fill thoroughly tamped in 6 in. lifts. Place 6 inches additional backfill above grade around pole base to allow for settling, as per Item 627.
11. Excess pole length shall be trimmed from the top at a slope to aid water run off.
12. Gain pole two places for each meter, service, separate or auxiliary enclosure. See ED(4) for details.
13. All illumination and power conductors to be pull tested and megged. Do not meg traffic signal cable.
14. Enclosures are to be locked, and ground box covers are to be bolted before power is applied to the circuit.
15. Conduits entering top of enclosures to be fitted with conduit sealing hub or threaded boss, such as meter hub. Off-set nipple, when required, shall not be zinc-die-pressure cast. All metal conduits not connected to conduit sealing hub, or threaded boss must have a grounding bushing. Terminate bonding jumper to ground bus. All conduits entering enclosures shall be sealed. Silicone shall not be allowed.

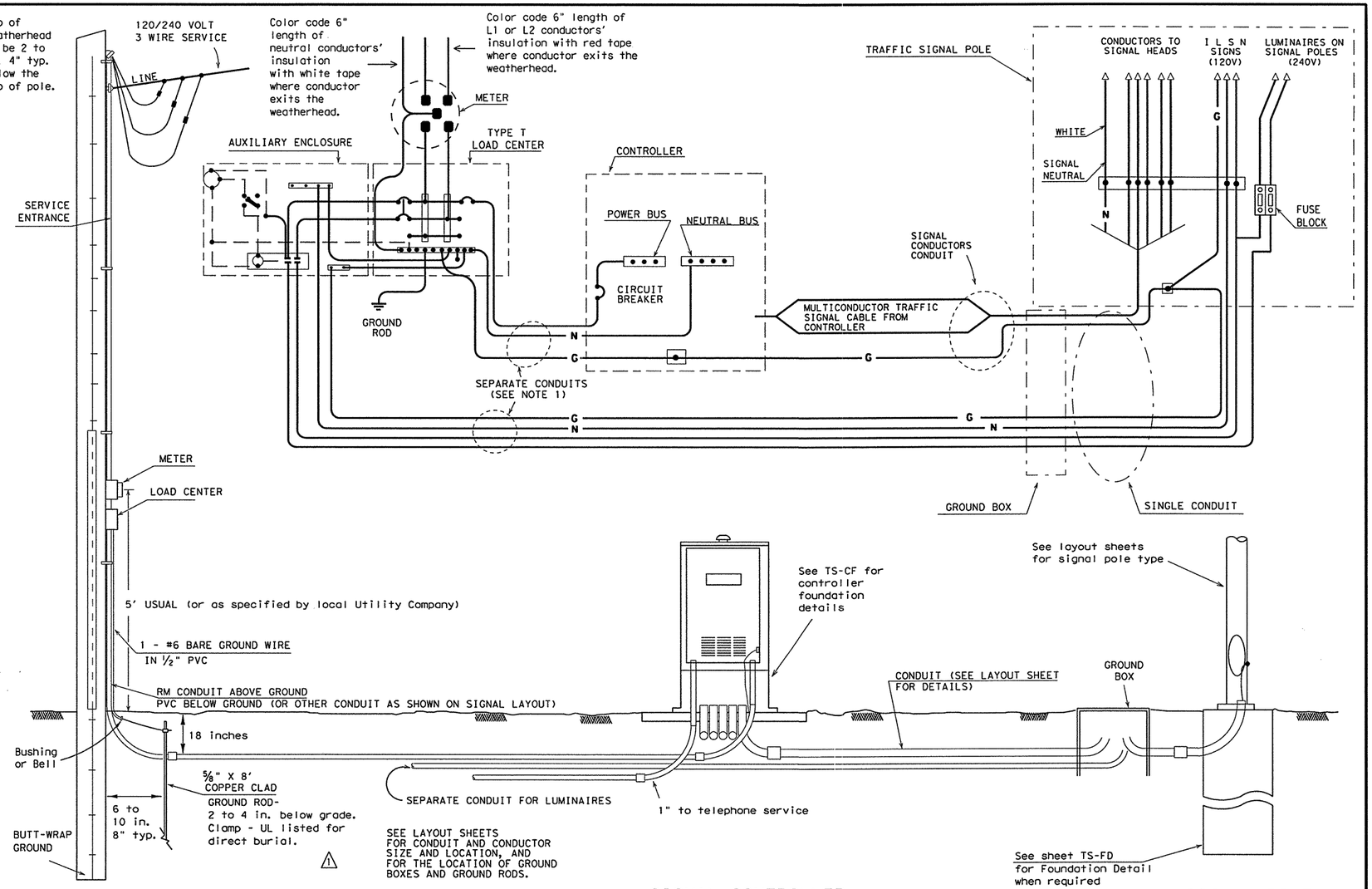

ELECTRICAL SERVICE

(TYPE T TIMBER POLE SHOWN AS EXAMPLE, SEE ELECTRICAL DETAILS, LAYOUT SHEETS, AND ELECTRICAL SERVICE DATA SHEET FOR SERVICE REQUIRED AND FOR DETAILS.)

SIGNAL CONTROLLER

SIGNAL POLE

Unless shown elsewhere in the plans, electrical service data for Types D and T shall be as follows.

ELECTRICAL SERVICE DATA

ELECTRICAL SERVICE DESCRIPTION(SEE ED(4))	SERVICE CONDUIT SIZE (RMC)	SERVICE CONDUCTORS NO./SIZE	SAFETY SWITCH AMPS	MAIN DISCONNECT CKT. BRK. POLE/AMP	TWO-POLE CONTACTOR AMPS ***	PANELBD./ LOADCENTER AMP RATING (MIN)	CIRCUIT NO.	BRANCH CKT. BRK. POLE/AMPS	KVA LOAD
TY D (120/240)070(NS)AL(E)**(*)	1¼ △1	3/#4	N/A	2P/70	30	100	T.S. Lighting	1P/50 2P/15	<7.1
TY T (120/240)000(NS)GS(E)**(*)	1¼ △1	3/#4	N/A	None	30	70	T.S. Lighting	1P/50 2P/15	<7.1

*** Eliminate photocell, contactor and seperate enclosure if lighting, or internally lighted signs are not required by plans
** See descriptive code in estimate for service support type.
* See descriptive code in estimate for overhead or underground service.

5/03 Revision
△1 Revised notes.

Texas Department of Transportation
Traffic Operations Division

ELECTRICAL DETAILS- TYPICAL TRAFFIC SIGNAL SYSTEM DETAILS

ED(7)-03

©TxDOT January 1992

DN: TXDOT	CK: TXDOT	DW: TXDOT	CK: TXDOT

REVISIONS: 4-98, 12-00, 3-03, 5-03

CONT	SECT	JOB	HIGHWAY
0091	04	055	SH 289
DIST		COUNTY	SHEET NO.
18		COLLIN	414

71G

DATE: 4/4/2011 8:15:57 AM
FILE: U:\US 289, 0091-04-055\ED7-03.DGN

R-201104-01

DISCLAIMER: The use of this standard is governed by the "Texas Engineering Practice Act". No warranty of any kind is made by TxDOT for any purpose whatsoever. TxDOT assumes no responsibility for the conversion of this standard to other formats or for incorrect results or damages resulting from its use.

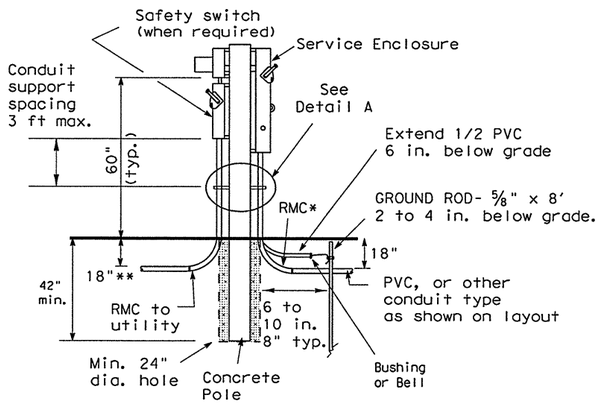

CONCRETE SERVICE SUPPORT

(Underground)

Color code grounded - neutral conductor with white tape covering 6 in. of conductor length. Color code L1 or L2 Hot conductor with red tape covering 6 in. of conductor length. Where conductors exit weather-head, conductors free length shall be 12 in. min., 18 in. max.

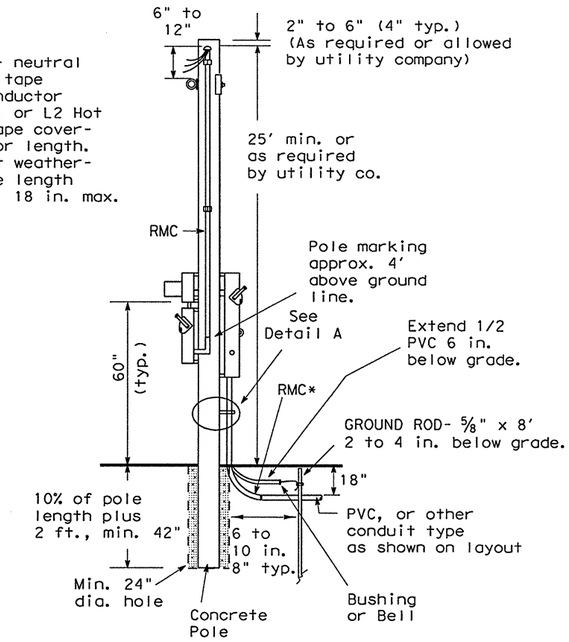

CONCRETE SERVICE SUPPORT

(Overhead)

*same size as branch circuit conduit shown on layout sheets.
** or as required by utility company.

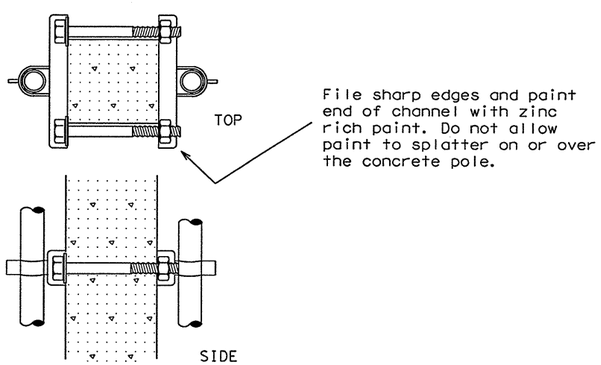

DETAIL A

Channel bracket or other arrangement approved by the Engineer. (Kindorf, Unistrut, B-line or equal)

Note: Attach channels with stainless steel concrete anchors (max. 1" depth), square U-bolts or back to back channel with long bolts, or other secure mounting as approved by the Engineer. Bolts galvanized in accordance with ASTM A153. Channel shall be galvanized.

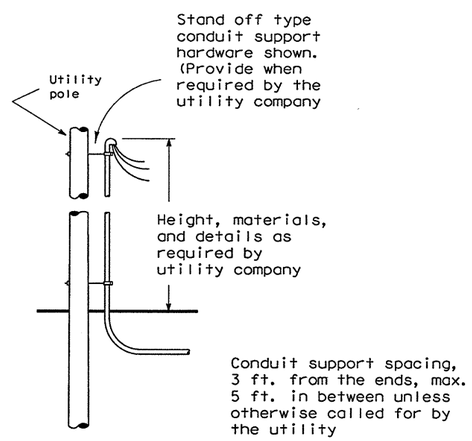

UTILITY POLE CONNECTIONS

(When underground service is required by descriptive code and utility is overhead.)

NOTES:

Electrical service support structures bid as type GC or OC shall be concrete poles and shall meet the following specifications.

1. Poles shall be prestressed concrete and suitable for direct embedment into the ground without special foundations.
2. Poles bid as type "GC" shall be a granite concrete mixture consisting of gray Portland cement with exposed pink granite aggregate. Poles bid as type "OC" shall be other concrete mixture as shown elsewhere on the plans or as directed by the Engineer.
3. Poles greater than 10 ' shall be square in cross-section, with chamfered corners, and shall have a standard taper of 0.162 inch per foot. Cross sectional dimensions shall not deviate by more than 3/8 inch. Poles 10' or less may be tapered .162"/ft or may be non-tapered. The allowable tolerance shall be plus 3 inches and -2 inches in the overall length. The width of the bottom face of the pole as it is cast may be less than the top face. All small cavities shall be cleaned, saturated with water and then filled with mortar. A small cavity is defined as one larger than 1/4 inch but smaller than 3/4 inch in diameter, and less than 3/8 inch deep. Larger non-structural cavities and spalls shall be repaired by opening side of the damaged area on a 1 to 1 slope using a mechanical grinder, cleaning thoroughly and filling with a high-strength non-shrink concrete repair material. Poles with other defects may be repaired only upon authorization of and using the method prescribed by the Engineer.
4. The end of each steel reinforcing strand in the tip and butt shall be burned back to a minimum depth of 1/2 inch. The holes left by the removal of the strand shall be thoroughly cleaned of any loose residue. The holes shall then be completely filled with non-shrink grout and smoothed evenly with tip or butt surface.
5. Prestressing strands shall have a minimum concrete cover of 1 1/4 inch.
6. A straight line joining the edge of the pole at the butt and the edge of the pole at the top shall not be distant from the surface of the pole at any point by more than 3/8 inch for each 10 feet of length.
7. The chloride content of the concrete mix, including all ingredients shall be 0.4 pounds per cubic yard, or less.
8. Concrete used in poles shall have a compressive strength at transfer of not less than 4,000 PSI, and a 28-day compressive strength of not less than 7,000 PSI.
9. Materials shall comply with the latest version of the following standards:
   a) Portland Cement - ASTM C105
   b) Admixtures - ASTM C494
   c) Aggregates - ASTM C33 or C330
   d) Reinforcing Bars - ASTM A615
   e) Cold-Drawn Spiral Wire - ASTM A82
   f) Prestressing Strand, 270K - ASTM A416
10. Poles greater than 10' shall have a 4 inch tip and 3/8 inch strands. Poles 10' or less shall have a 5 inch min. tip and 3/8 inch strands. Pole shall have a load capacity of greater than 1188 lbs. applied 2 ft. below tip.
11. Poles shall be capable of withstanding single point pick up from the horizontal position when lifting from a point 30% of the overall length down from the tip.
12. All poles shall be marked by imprinting on one face. Marking shall indicate manufacturer's name, year of manufacture, length and name or type of pole. Marking shall be located approximately 4 ft. above ground line.
13. Dunnage points, two-point pickup locations for handling pole in horizontal position, and one-point pickup locations for use in raising the pole to a vertical position and handling in setting operation shall be marked on the pole with durable ink or paint or cast into the pole. These marks shall be small but conspicuous.
14. Poles shall be embedded 42 inches or 10% of length plus 2 ft. into the ground whichever is greater.
15. When required by utility company for overhead services, poles longer than 10 feet shall have a #6 solid ground wire running the entire length exiting within 6 inches from the top and bottom of the pole. The Contractor shall connect the bottom to a butt wrap or butt plate grounding device.
16. All conduit and conductors attached to the service support and within 12 inches of the service support will not be paid for directly, but shall be subsidiary to the electrical service. All conduit and conductors from the utility company pole to a point 12 inches from the service support, including conduit and conductors required for the utility pole riser when furnished by the Contractor, will be paid for separately.
17. All mounting hardware and installation details of services shall be in accordance with utility company specifications.
18. All conduit on service supports shall be rigid metal conduit except the conduit for grounding electrode conductor (ground rod wire) shall be 1/2 inch PVC. Service entrance conduit size shall be as shown elsewhere. Conduit for branch circuit entry to enclosure shall be the same size as that shown on the layout sheets for branch circuit conduit. Rigid metal conduit shall extend a minimum of six inches underground and then coupled to the type conduit shown on the layout for that particular branch circuit. RMC shall have grounding bushings in enclosures.
19. Backfill shall be in accordance with Item 400 except for measurement and payment. Backfilling will not be paid for directly but shall be subsidiary to the various bid items.
20. Liquid tight flexible metal conduit (LFMC), may be used when meter and service enclosure are mounted 90 to 180 degrees to each other. LFMC shall not exceed 3 ft. and shall be securely supported within one ft. of each end. Each end of LFMC must have a grounding bushing or be terminated with a grounding fitting. A neutral conductor must be installed within the LFMC. Bend in LFMC shall not exceed 180 degrees. LFMC may not be installed on utility company owned poles. A pull test is required on all installed conductors, at least six inches of free conductor movement shall be demonstrated to the satisfaction of the Engineer.
21. Contractor may order concrete service support structures with 3/4" hole near top of pole for eye bolt type bracket. Eye bolt bracket may be installed as means of overhead service drop anchoring point by utility. Pole may also be center drilled in the field for installation of eye bolt bracket. When used, install bracket 6" to 12" below weatherhead.

Texas Department of Transportation
Traffic Operations Division

ELECTRICAL DETAILS- SERVICE SUPPORT TYPES GC AND OC

ED(9)-03

©TxDOT April 1998	DN: TXDOT	CK: TXDOT	DW: TXDOT	CK: TXDOT	
12-00 REVISIONS 3-03	CONT	SECT	JOB	HIGHWAY	
	0091	04	055	SH 289	
	DIST		COUNTY		SHEET NO.
	18		COLLIN		415

71.1

DISCLAIMER: The use of this standard is governed by the "Texas Engineering Practice Act". No warranty of any kind is made by TxDOT for any purpose whatsoever. TxDOT assumes no responsibility for the conversion of this standard to other formats or for incorrect results or damages resulting from its use.

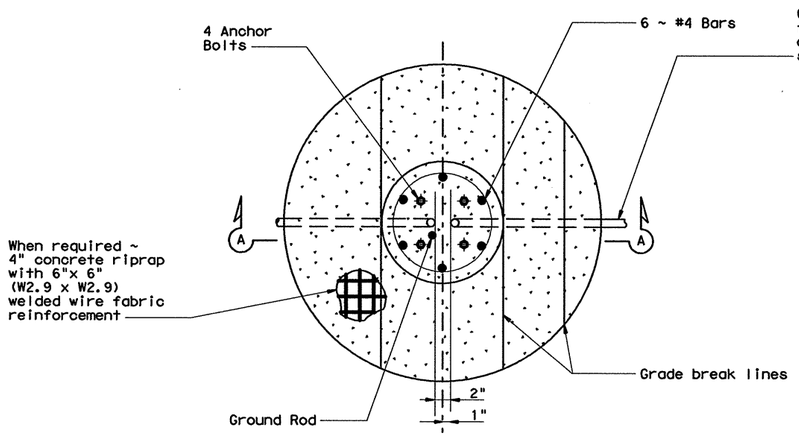

FOUNDATION DETAIL

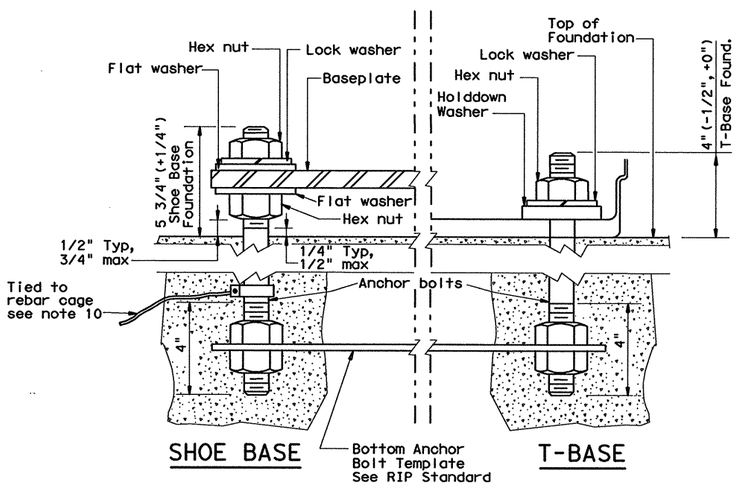

ANCHOR BOLT DETAIL

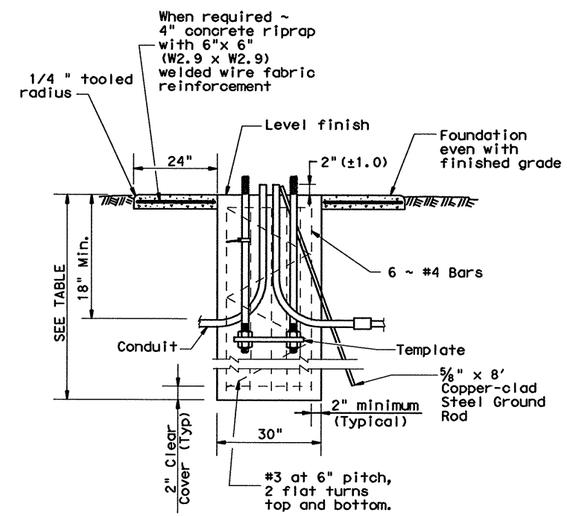

SECTION A-A

SHOWING CONSTANT GRADE

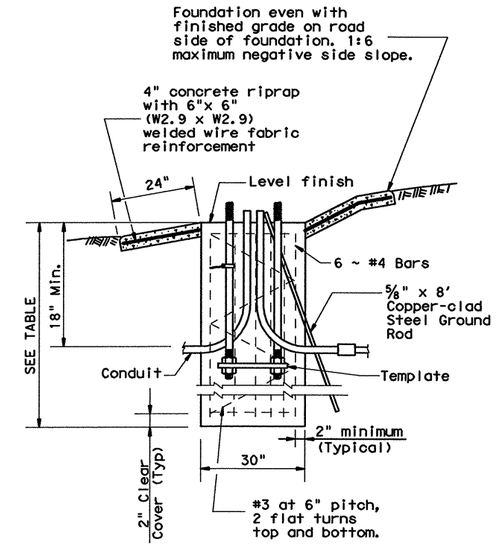

SECTION A-A

SHOWING SLOPED GRADE

PAY QUANTITY OF RIPRAP PER FOUNDATION (Install only when shown on the plans)		
Foundation Diameter	RIPRAP DIAMETER	RIPRAP (CONC) (CL B)
30 in.	78 in.	0.35 CY

ANCHOR BOLTS			
POLE MOUNTING HEIGHT	BOLT CIRCLE		ANCHOR BOLT SIZE
	Shoe Base	T-Base	
<40 ft.	13 in.	14 in.	1 in. x 30in.
40-50 ft.	15 in.	17 ¼ in.	1 ¼ in. x 30in.

RECOMMENDED FOUNDATION LENGTHS (See note 1)			
MOUNTING HEIGHT	TEXAS CONE PENETROMETER N Blows/ft		
	10	15	40
≤20 ft.	6'	6'	6'
>20 ft. to 30 ft.	8'	6'	6'
>30 ft. to 40 ft.	8'	8'	6'
>40 ft. to 50 ft.	10'	8'	6'

BREAKAWAY POLE PLACEMENT (See note 6)	
Roadway Functional Classification	** Pole offset (distance to transformer base, tolerance + 6in.-0in.)
Freeway Mainlanes (roadway with full control of access)	15 ft. (minimum and typical) from lane edge
All curbed, 45 mph or less design speed	2.5 ft. minimum (15 ft. desirable) from curb face
All others	10 ft. minimum*(15 ft. desirable) from lane edge

* or as close to ROW line as is practical

** provide 2/5 of the luminaire mounting height behind the pole for "falling area" to prevent encroachment on the other travel lanes. See design guidelines.

1. "Recommended Foundation Lengths" table is for information purposes only. Foundation lengths shall be as shown on the plans, or as directed by the Engineer. Foundations will be paid for under Item 416, "Drilled Shaft Foundations," unless otherwise shown on the plans.
2. Erect roadway illumination assembly poles plumb and true. Form and level the top 6" of the foundation so the pole will be plumb. Use leveling nuts to plumb shoe base poles. Do not use shims or leveling nuts under transformer bases. Do not grout between baseplate and the foundation.
3. Ensure Class 2A and 2B fit for anchor bolts and nuts. Tap and chase nuts after galvanizing. Anchor bolt body with rolled threads need not be full size.
4. Use appropriate class of concrete as specified in Items 416 and 432.
5. Place riprap around the foundation when called for elsewhere in the plans. Riprap will be paid for under Item 432.
6. Locate breakaway roadway illumination assemblies as shown in the placement table, unless otherwise dimensioned on the plans. Protect non-breakaway illumination assemblies from vehicular impact (i.e. 2 ft. behind guard rail or mounted on traffic barrier), or located outside the clear zone, except that 2.5 ft. from curb face is minimum desired for light poles on city streets, 45 mph or less, see design guidelines for further information.
7. Use 8 hold down washers on transformer base poles as recommended by the manufacturer and supplied with base.
8. Install a minimum of 2 conduits in each foundation. See lighting layout sheets for locations of foundations with more than 2 conduits. Cap unused conduits in foundations on both ends.
9. Conduit location in foundations is critical for breakaway devices. Place conduits 2 in. apart on centerline as shown.
10. Bond anchor bolt to rebar cage with #6 bare stranded copper conductor. Use listed mechanical connectors rated for embedment in concrete.
11. Use rip rap on T-base foundations that are located on a sloped grades.

Texas Department of Transportation
Traffic Operations Division

ROADWAY ILLUMINATION DETAILS

(RDWY ILLUM FOUNDATIONS)

RID(FND)-11

©TxDOT January 2007

DN: TXDOT	CK: TXDOT	DW: TXDOT	CK: TXDOT

REVISIONS	CONT	SECT	JOB	HIGHWAY
1-11	0091	04	055	SH 289
	DIST		COUNTY	SHEET NO.
	18		COLLIN	415A

72C

DATE: 4/12/2011 8:37:46 AM
FILE: U:\US 289, 0091-04-055\RID2-11.DGN

DISCLAIMER: The use of this standard is governed by the "Texas Engineering Practice Act". No warranty of any kind is made by TxDOT for any purpose whatsoever. TxDOT assumes no responsibility for the conversion of this standard to other formats or for incorrect results or damages resulting from its use.

SHIPPING PARTS LIST ~ POLES AND LUMINAIRE ARMS

Nominal Mounting Ht. (ft)	Shoe Base Designation Pole	A1	A2	Luminaire	Quantity	T-Base Designation Pole	A1	A2	Luminaire	Quantity	CSB/SSCB Mounted Designation Pole	A1	A2	Luminaire	Quantity
20	(Type SA 20 S - 4)			(.15kW) S		(Type SA 20 T - 4)			(.15kW) S						
	(Type SA 20 S - 4 - 4)			(.15kW) S		(Type SA 20 T - 4 - 4)			(.15kW) S						
30	(Type SA 30 S - 4)			(.25kW) S		(Type SA 30 T - 4)			(.25kW) S		(Type SP 28 S - 4)			(.25kW) S	
	(Type SA 30 S - 4 - 4)			(.25kW) S		(Type SA 30 T - 4 - 4)			(.25kW) S		(Type SP 28 S - 4 - 4)			(.25kW) S	
	(Type SA 30 S - 8)			(.25kW) S		(Type SA 30 T - 8)			(.25kW) S		(Type SP 28 S - 8)			(.25kW) S	
	(Type SA 30 S - 8 - 8)			(.25kW) S		(Type SA 30 T - 8 - 8)			(.25kW) S		(Type SP 28 S - 8 - 8)			(.25kW) S	
40	(Type SA 40 S - 4)			(.25kW) S		(Type SA 40 T - 4)			(.25kW) S		(Type SP 38 S - 4)			(.25kW) S	
	(Type SA 40 S - 4 - 4)			(.25kW) S		(Type SA 40 T - 4 - 4)			(.25kW) S		(Type SP 38 S - 4 - 4)			(.25kW) S	
	(Type SA 40 S - 8)			(.25kW) S		(Type SA 40 T - 8)			(.25kW) S		(Type SP 38 S - 8)			(.25kW) S	
	(Type SA 40 S - 8 - 8)			(.25kW) S		(Type SA 40 T - 8 - 8)			(.25kW) S		(Type SP 38 S - 8 - 8)			(.25kW) S	
	(Type SA 40 S - 10)			(.25kW) S		(Type SA 40 T - 10)			(.25kW) S		(Type SP 38 S - 10)			(.25kW) S	
	(Type SA 40 S - 10 - 10)			(.25kW) S		(Type SA 40 T - 10 - 10)			(.25kW) S		(Type SP 38 S - 10 - 10)			(.25kW) S	
	(Type SA 40 S - 12)			(.25kW) S		(Type SA 40 T - 12)			(.25kW) S		(Type SP 38 S - 12)			(.25kW) S	
	(Type SA 40 S - 12 - 12)			(.25kW) S		(Type SA 40 T - 12 - 12)			(.25kW) S		(Type SP 38 S - 12 - 12)			(.25kW) S	
50	(Type SA 50 S - 4)			(.4kW) S		(Type SA 50 T - 4)			(.4kW) S		(Type SP 48 S - 4)			(.4kW) S	
	(Type SA 50 S - 4 - 4)			(.4kW) S		(Type SA 50 T - 4 - 4)			(.4kW) S		(Type SP 48 S - 4 - 4)			(.4kW) S	
	(Type SA 50 S - 8)			(.4kW) S		(Type SA 50 T - 8)			(.4kW) S	1	(Type SP 48 S - 8)			(.4kW) S	
	(Type SA 50 S - 8 - 8)			(.4kW) S		(Type SA 50 T - 8 - 8)			(.4kW) S		(Type SP 48 S - 8 - 8)			(.4kW) S	
	(Type SA 50 S - 10)			(.4kW) S		(Type SA 50 T - 10)			(.4kW) S		(Type SP 48 S - 10)			(.4kW) S	
	(Type SA 50 S - 10 - 10)			(.4kW) S		(Type SA 50 T - 10 - 10)			(.4kW) S		(Type SP 48 S - 10 - 10)			(.4kW) S	
	(Type SA 50 S - 12)			(.4kW) S		(Type SA 50 T - 12)			(.4kW) S		(Type SP 48 S - 12)			(.4kW) S	
	(Type SA 50 S - 12 - 12)			(.4kW) S		(Type SA 50 T - 12 - 12)			(.4kW) S		(Type SP 48 S - 12 - 12)			(.4kW) S	

OTHER Designation Pole	A1	A2	Luminaire	Quantity

GENERAL NOTES:

All work, materials and services not shown on the plans which may be necessary for complete and proper construction shall be performed, furnished and installed by the Contractor. Faulty fabrication or poor workmanship in any material, equipment or installation will be considered justification for rejection. Where manufacturers provide warranties or guarantees as a customary trade practice, Contractor shall furnish to the Department such warranties or guarantees.

The location of poles and fixtures are diagrammatic only and may be shifted by the Engineer to accommodate local conditions. Erection and/or removal of poles and luminaires located near overhead electrical lines shall be accomplished using established industry and utility safety practices and in accordance with laws governing such work. The Contractor shall consult with the appropriate utility company prior to beginning such work.

A. Standard Steel Pole Designs. Steel poles fabricated in accordance with the details and dimensions shown herein, shall be considered standard designs. Submission of shop drawings and design calculations for standard designs is not required.

B. Optional Steel Pole Designs. Multi-sided steel poles may be allowed as optional designs, if steel poles are permitted or required, pending approval by the Department as outlined below.
   1. Shop Drawings. Optional designs require submission of shop drawings and design calculations bearing the seal of an engineer registered in the State of Texas, in accordance with Item 441, "Steel Structures." The Department may elect to pre-approve some shop drawings for optionally designed poles. Submission of shop drawings and design calculations is not required for structures fabricated in accordance with the details of shop drawings on the pre-approved list maintained by the TxDOT Traffic Operations Division. Any deviation from the pre-approved shop drawings will require submission of shop drawings of the complete assembly and design calculations as described above.
   2. Structural Support Design for Luminaires. Lighting support structures shall be designed for a 25 year design life in accordance with the 2001 Edition of the AASHTO "Standard Specifications for Structural Supports for Highway Signs, Luminaires and Traffic Signals." All poles shall be designed for 110 mph 3-second gust wind speeds. An additional 1.14 gust factor shall be applied to the wind loads. For transformer base poles, fabricator shall include transformer base and connecting hardware in design calculations and shop drawing submittals. All transformer bases shall have been structurally tested to resist the theoretical plastic moment capacity of the pole. Certification of the plastic moment load test and FHWA breakaway requirement test of the model of base being furnished shall be submitted with the shop drawings. Shop drawings shall show breakaway base model number, and manufacturer's name and logo. Manufacturer's shop drawings shall include the ASTM designations for all materials to be used.
   3. Mast Arm Attachments. All poles and attachments shall be structurally designed to support two 12-foot mast arms and luminaires. Poles shall be supplied with mast arm combinations as shown in the plans. All mast arms shall be designed for a 60-pound luminaire having an effective projected area of 1.6 square feet.
   4. Anchor Bolt Assembly. Anchor bolt assemblies for optionally designed poles shall be the same as those shown herein.

C. Aluminum Pole Designs. Aluminum pole designs may be allowed, if aluminum poles are permitted or required, pending approval by the Department as outlined below.
   1. Meet all of the requirements stated above for optional steel pole designs and the following:
      a. Aluminum poles shall be fabricated in accordance with "Structural Welding Code-Aluminum" AWS D1.2.
      b. Aluminum pole designs shall use the same anchor bolt assembly and be subject to the same geometric restraints and other requirements for steel poles specified herein.
      c. Aluminum poles shall be equipped with vibration mitigation devices, as approved by the engineer.
      d. Pole components shall be constructed using the following material:
      Shaft: ASTM B221 or B241 Alloy 6063-T6, ASTM B209 Alloy 5086-H34, ASTM B221 Alloy 6005-T5.
      Base Flange: ASTM B26 Alloy 356.0-T6 or ASTM B108 Alloy 356.0-T6 (Yield strength test required).
      Mast Arm Fitting: ASTM B209 Alloy 6061-T6 or ASTM B221 Alloy 6005-T5.
      Mast Arms: ASTM B241 Alloy 6061-T6 or Alloy 6063-T6.
      Pole Cap: ASTM B209 Alloy 5086-H32 or ASTM B108 or B26 Alloy 356.0-T6.
      Bolts: Stainless Steel AISI 300 series. Bolts threading into aluminum threads shall be treated with anti-seize compound, Never-Seez Compound, Permatex 133K or equal.

D. Special Designs. Poles with architectural treatments shall meet the requirements shown elsewhere in the plans.

EXPLANATION OF ROADWAY ILLUMINAION ASSEMBLY DESIGNATIONS

(TYPE SA 50 T - X - X) (.4KW) S

SA: Pole and mast arm may be steel or aluminum.
ST: Pole and mast arm must be steel.
AL: Pole and mast arm must be aluminum.
SP: Squashed (ovalized) steel or aluminum pole for installing on CSB or SSCB. See standard sheet CSB (5), or SSCB (4).

Two numerical digits denote mounting height in feet.

Next letter denotes type of base, (S-Shoe Base, T-Transformer Base, or B-Shoe Base Bridge Mount)

First number denotes length of mast arm in feet.

Use of second mast arm is indicated by second dashed number which denotes length in feet.

Next three figures indicate luminaire rating (1 kW= 1000 watts, .4 kW= 400 watts, etc.) Fixtures for U/P (SPL-CO) (.15KW)S(TYPE 1) and (TYPE 2) as shown on RID(UP) shall be "cobra head" style fixtures that meet the specifications shown on RID(LUM) sheets 1 and 2. Fixtures bid under the descriptive code RDWY ILL ASSEM U/P TYPE IF shall meet the specifications shown on RID(IF). All other fixtures bid under Item 610 shall meet specifications shown elsewhere in the plans.

Last letter indicates the type of lamp (M- Metal Halide, S- High Pressure Sodium, L- Low Pressure Sodium).

SHEET 1 of 4

Texas Department of Transportation
Traffic Operations Division

ROADWAY ILLUMINATION POLES

RIP(1)-11

©TxDOT January 2007

REVISIONS	DN: TXDOT	CK: TXDOT	DW: TXDOT	CK: TXDOT
	CONT	SECT	JOB	HIGHWAY
	0091	04	055	SH 289
	DIST		COUNTY	SHEET NO.
	18		COLLIN	415B

73A

DATE: 4/12/2011 8:38:24 AM
FILE: U:\US 289, 0091-04-055\RIP11.DGN

DISCLAIMER:
The use of this standard is governed by the "Texas Engineering Practice Act". No warranty of any kind is made by TxDOT for any purpose whatsoever. TxDOT assumes no responsibility for the conversion of this standard to other formats or for incorrect results or damages resulting from its use.

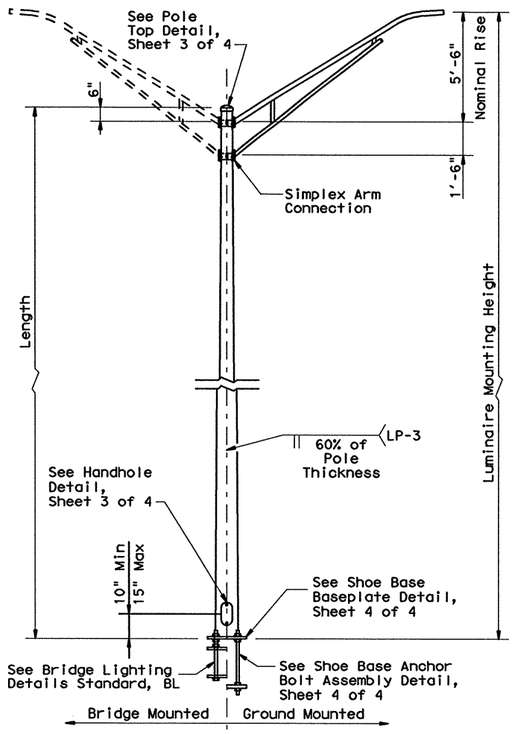

SHOE BASE POLE

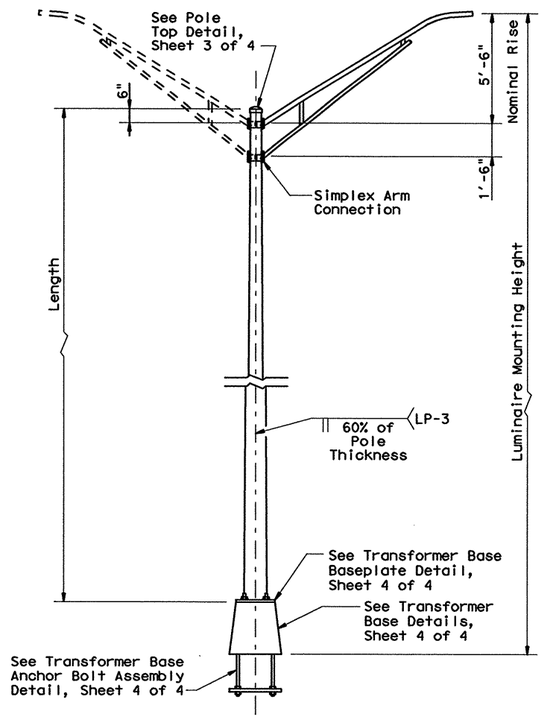

TRANSFORMER BASE POLE

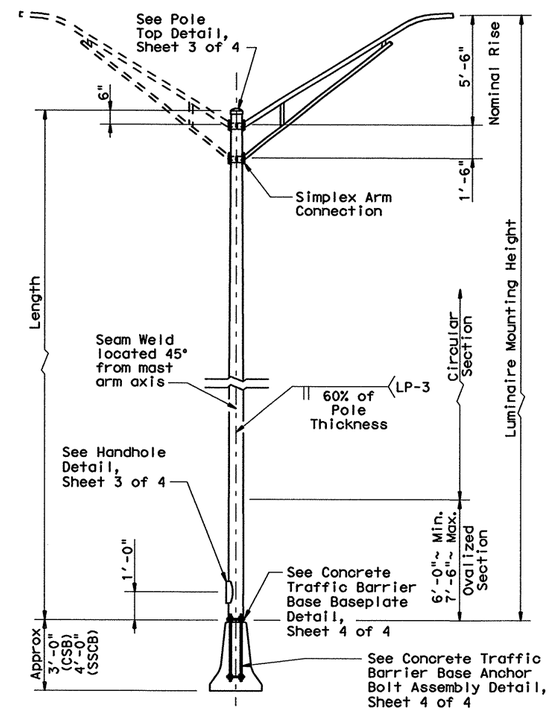

CONCRETE TRAFFIC BARRIER BASE POLE

MATERIAL DATA		
COMPONENT	ASTM DESIGNATION	MIN. YIELD (ksi)
Pole Shaft (0.14"/ft. Taper)	A572 Gr 50, A595 Gr A, A1011 HSLAS Gr 50 Cl 2 ③, or A1008 HSLAS Gr 50 Cl 2	50
Base Plate and Handhole Frame	A572 Gr.50, or A36	36
T-Base Connecting Bolts	A325 ①	92
Anchor Bolts	F1554 Gr 55, A193-B7 or A321	55 105
Anchor Bolt Templates	A36	36
Heavy Hex (H.H.) Nuts	A194 Gr 2H, or A563 Gr DH	
Flat Washers	F436	

①Lubricate in the field if necessary in lieu of the requirements in ASTM A325.

②Before ovalized as shown on Concrete Traffic Barrier Base Baseplate details, Sheet 4 of 4.

③A1011 SS Gr 50 may be used in lieu of HSLAS, provided the material meets the elongation requirements for HSLAS

POLE ASSEMBLY FABRICATION TOLERANCES TABLE	
DIMENSION	TOLERANCE
Shaft length	+1"
I.D. of outside piece of slip fitting pieces	+1/8", -1/16"
O.D. of inside piece of slip fitting pieces	+1/32", -1/8"
Shaft diameter: other	+3/16"
Out of "round"	1/4"
Straightness of shaft	±1/4" in 10 ft
Twist in shaft	4° in 50 ft
Perpendicular to baseplate	1/8" in 24"
Pole centered on baseplate	±1/4"
Location of Attachments	±1/4"
Bolt hole spacing	±1/16"

SHOE BASE POLE					
Luminaire Mounting Height (ft)	Base Diameter (in)	Top Diameter (in)	Length (ft)	Pole Thickness (in)	Design Moment (K-ft)
20.00	7.00	4.90	15.00	0.1196	7.1
30.00	7.50	4.00	25.00	0.1196	13.2
31.00-39.00	8.00	4.36-3.24	26.00-34.00	0.1196	20.7
40.00	8.50	3.60	35.00	0.1196	20.7
50.00	10.50	4.20	45.00	0.1196	30.3

TRANSFORMER BASE POLE					
Luminaire Mounting Height (ft)	Base Diameter (in)	Top Diameter (in)	Length (ft)	Pole Thickness (in)	Design Moment (K-ft)
20.00	7.00	5.11	13.50	0.1196	7.1
30.00	7.50	4.21	23.50	0.1196	13.2
31.00-39.00	8.00	4.57-3.45	24.50-32.50	0.1196	20.7
40.00	8.50	3.81	33.50	0.1196	20.7
50.00	10.00	3.41	43.50	0.1196	30.3

CONCRETE TRAFFIC BARRIER BASE POLE (CSB/SSCB)						
Luminaire Mounting Height (ft)	Base② Diameter (in)	Top Diameter (in)	Length (ft)	Pole Thickness (in)	Design Moment (K-ft)	
					About ℄ of Rail	Perp. to Rail
28.00	9.00	5.78	23.00	0.1196	10.3	13.2
38.00	9.00	4.38	33.00	0.1196	16.6	20.8
48.00	10.50	4.48	43.00	0.1345	25.1	30.5

Designs conform to 2001 AASHTO Standard Specifications for Structural Supports for Highway Signs, Luminaires, and Traffic Signals and Interim Specifications. Design 3-Second Gust Wind Speed equal 110 mph with a 1.14 gust factor. A wind importance factor of 0.80 is applied to adjust the wind speed to a 25 year recurrence interval. Design moments listed in tables assume base of pole is less than 25' above natural ground level.

Design structures to support two 12' luminaire mast arms and luminaires. Design mast arms for a 60-pound luminaire having an effective projected area of 1.6 square feet.

Fabrication shall be in accordance with the Specifications and with the details, dimensions, and weld procedures shown herein. Do not submit shop drawings for roadway illumination pole assemblies fabricated in accordance with the details, dimensions, and weld procedures shown herein. Weld references call for preapproved weld procedures which the Fabricator must obtain prior to fabrication. Materials, fabrication tolerances, and shipping practices shall meet the requirements of these sheets and the Specifications. In the absence of specified fabrication tolerances, dimensions shall be within the tolerances generally obtainable in normal fabrication practice.

For mounting heights between values shown in the tables, use base diameter and thickness values for the larger pole.

Unless otherwise noted, all steel parts shall be galvanized in accordance with Item 445, "Galvanizing."

Steel poles shall be fabricated in accordance with Item 441, "Steel Structures." Longitudinal seam welds for pole sections shall have 60% minimum penetration. All welding shall be in accordance with the ANSI/AWS Structural Welding Code D1.1.

Two-section poles joined by circumferential welds will not be permitted, unless otherwise shown on the plans. Poles may be fabricated in two sections and field-assembled by the lap-joint method. The two sections shall telescope together with a lap length of not less than 1-1/2 times the shaft diameter at the lap joint.

Alternate material equal to or better than material specified may be substituted with the approval of the Engineer.

Lubricate and tighten anchor bolts, when erecting shoe base poles and concrete traffic barrier base poles, in accordance with Item 449, "Anchor Bolts."

All poles, except Transformer Base Poles, shall have hand holes with reinforcing frames and covers. Except for poles mounted on a concrete traffic barrier, hand holes shall be placed 90 degrees to mast arm unless otherwise noted on the plans. For poles mounted on a concrete traffic barrier with one luminaire arm, hand holes shall be located 180 degrees from luminaire arm. For poles mounted on a concrete traffic barrier with two luminaire arms, all hand holes shall be on the same side of the barrier.

The finished pole shall have a smooth, uniform finish free of pits, blisters, or other defects. Scratched, chipped, and other damaged galvanized areas on poles and mast arms shall be repaired in accordance with Item 445, "Galvanizing."

SHEET 2 of 4

Texas Department of Transportation
Traffic Operations Division

ROADWAY ILLUMINATION POLES

RIP(2)-11

©TxDOT January 2007

DN: TXDOT	CK: TXDOT	DW: TXDOT	CK: TXDOT

REVISIONS
MOD 1/11 JSY/TGG Added Aditional H.H. in table and revised Anchor Bolt Assembly

CONT	SECT	JOB	HIGHWAY
0091	04	055	SH 289
DIST		COUNTY	SHEET NO.
18		COLLIN	415C

73B

DATE: 4/12/2011 8:38:41 AM
FILE: U:\US 289, 0091-04-055\RIP11.DGN

R-201104-01

DISCLAIMER:
The use of this standard is governed by the "Texas Engineering Practice Act". No warranty of any kind is made by TxDOT for any purpose whatsoever. TxDOT disclaims liability for the conversion of this standard to other formats or for incorrect results or damages resulting from its use.

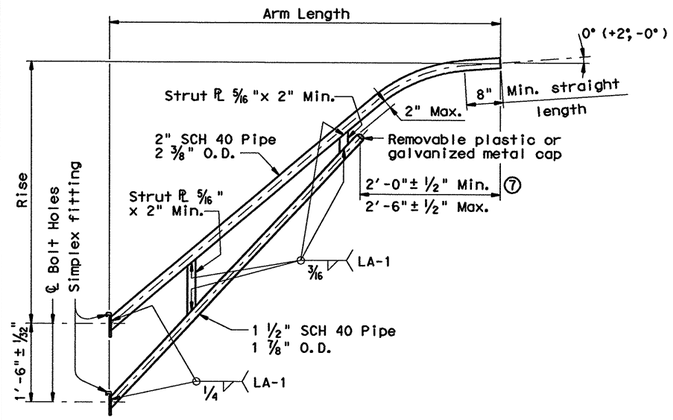

LUMINAIRE ARM

LUMINAIRE ARM DIMENSIONS		
Nominal Arm Length	Arm Length	Rise
4'-0"	3'-6"	2'-6" ⑩
6'-0"	5'-6"	5'-6"
8'-0"	7'-6"	5'-6"
10'-0"	9'-6"	5'-6"
12'-0"	11'-6"	5'-6"

MATERIALS	
Pole or Arm Simplex	ASTM A27 Gr 65-35, A148 Gr 80-50, A576 Gr 1021 ⑤, or A36 (Arm only)
Arm Pipes	ASTM A53 Gr A or B, A500 Gr B, A501, A 1008 HSLAS-F Gr 50 ⑥, or A1011 HSLAS-F Gr 50 ⑥
Arm Struts and Gusset Plates ④	ASTM A36, A572 Gr 50 ⑥, or A588
Misc.	ASTM designations as noted

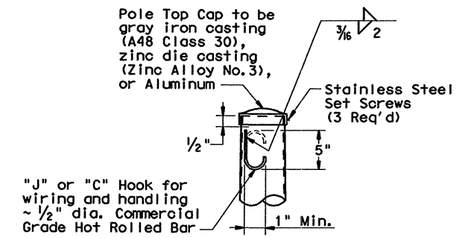

POLE TOP

ARM ASSEMBLY FABRICATION TOLERANCES TABLE	
DIMENSION	TOLERANCE
Arm Length	±3"
Arm Rise	+1 3/4" in 10 ft
Arm Diameter	+3/16"
Overall length or width	+1/4"
Thickness	+1/4", -1/16"
Deviation from flat	1/8" in 12"
Spacing between holes	+3/32"
Bolt hole size	±1/16"
Strut location in truss arms	±1 1/2"

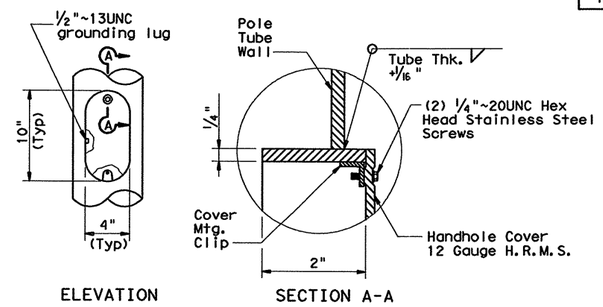

HANDHOLE

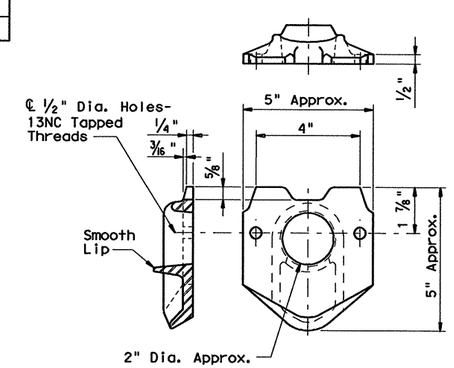

POLE SIMPLEX DETAIL⑨

④ Any of the materials listed for plates may be used where the drawings do not specify a particular ASTM designation.

⑤ A576 must be suitable for forging and also meet minimum tensile strength of 65 ksi, minimum yield of 35 ksi, and elongation in 2 inches of 22 percent.

⑥ A572, A1008 HSLAS-F, and A1011 HSLAS-F materials may have higher yield strengths but shall not have less elongation than the grade indicated.

⑦ Dimensional limits are given to show acceptable variation in design. All of a Fabricator's production of a particular arm length shall have the same dimensions within specified tolerances.

⑧ Each pole simplex fitting shall be supplied with 2 bolts and 2 lock washers of the size specified. The bolts and lock washers shall be secured to the pole with the other hardware items called for in the plans.

⑨ Proposed deviations in arm simplex dimensions or materials must be submitted to the Department for approval.

⑩ Luminaire mounting heights are based on assumed 5'-6" luminaire arm rise.

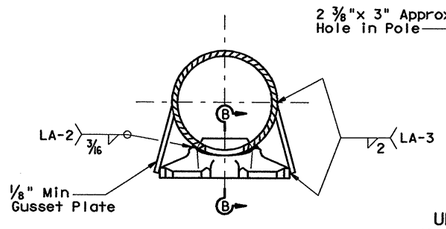

SECTION C-C

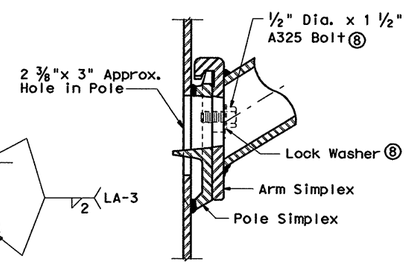

UPPER SIMPLEX FITTING
(Gusset not shown for clarity)

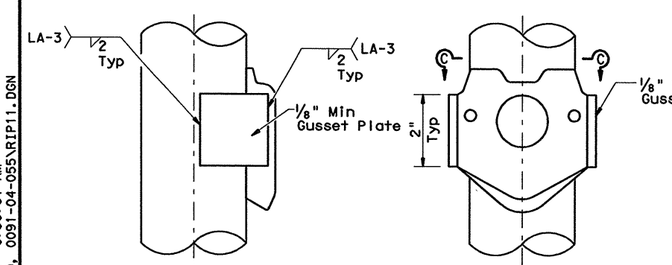

SIDE

ELEVATION

SIMPLEX ATTACHMENT DETAIL

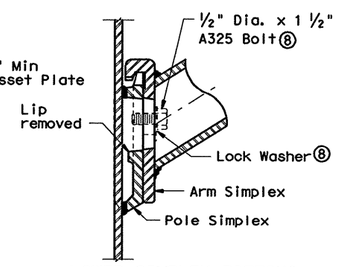

LOWER SIMPLEX FITTING
(Gusset not shown for clarity)

SECTION B-B

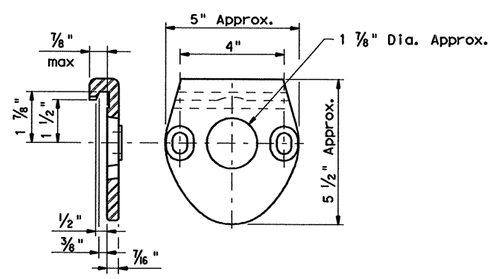

ARM SIMPLEX DETAIL⑨

SHEET 3 of 4

Texas Department of Transportation
Traffic Operations Division

ROADWAY ILLUMINATION POLES

RIP(3)-11

©TxDOT January 2007	DN: TXDOT	CK: TXDOT	DW: TXDOT	CK: TXDOT
REVISIONS	CONT	SECT	JOB	HIGHWAY
	0091	04	055	SH 289
	DIST		COUNTY	SHEET NO.
	18		COLLIN	415D

73C

DATE: 4/12/2011 8:38:57 AM
FILE: U:\US 289, 0091-04-055\RIP11.DGN

R-201104-01

DISCLAIMER: The use of this standard is governed by the "Texas Engineering Practice Act". No warranty of any kind is made by TxDOT for any purpose whatsoever. TxDOT assumes no responsibility for the conversion of this standard to other formats or for incorrect results or damages resulting from its use.

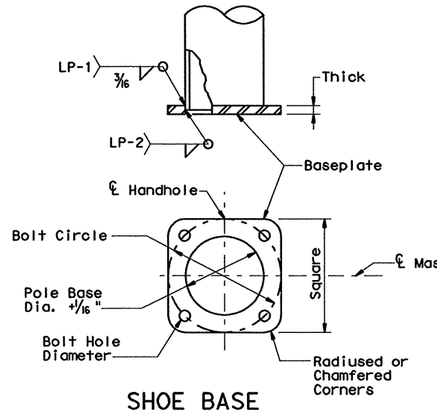

SHOE BASE BASEPLATE

SHOE BASE BASEPLATE TABLE				
MOUNTING HEIGHTS	BOLT CIRCLE	SQUARE	THICK	BOLT HOLE DIAMETER
20′ - 39′	13"	13"	1 1/4"	1 1/4"
40′	15"	15"	1 1/4"	1 1/2"
50′	15"	15"	1 1/2"	1 1/2"

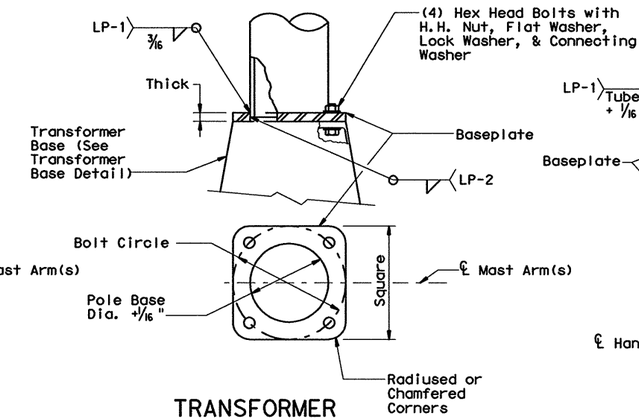

TRANSFORMER BASE BASEPLATE

TRANSFORMER BASE BASEPLATE TABLE						
MOUNTING HEIGHTS	BOLT CIRCLE	SQUARE	THICK	CONNECTING BOLT DIA.	BOLT HOLE DIAMETER	TRANSFOMER BASE TYPE
20′ - 39′	13"	13"	1 1/4"	1"	1 1/4"	A
40′	15"	15"	1 1/4"	1 1/4"	1 1/2"	B
50′	15"	15"	1 1/2"	1 1/4"	1 1/2"	B

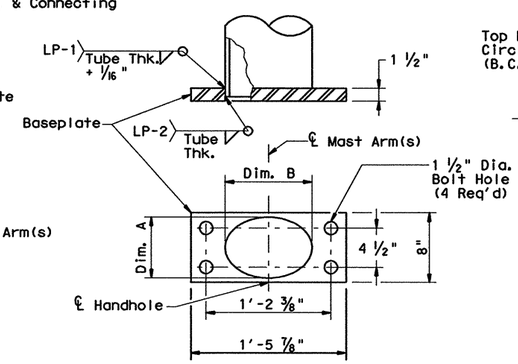

CONCRETE TRAFFIC BARRIER BASE BASEPLATE

CONCRETE TRAFFIC BARRIER BASE BASEPLATE TABLE			
MOUNTING HEIGHTS	POLE DIA.②	DIM. A	DIM. B
28′ - 38′	9"	7"± 1/4"	10"± 1/4"
48′	10 1/2"	7"± 1/4"	13"± 1/4"

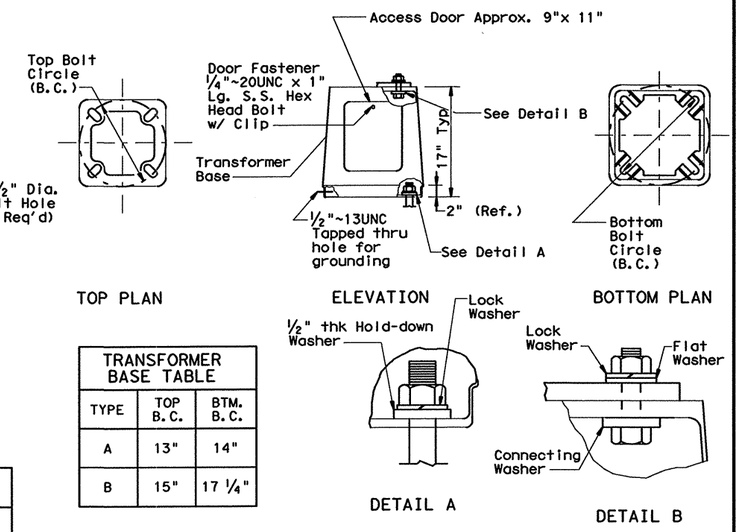

TRANSFORMER BASE TABLE		
TYPE	TOP B.C.	BTM. B.C.
A	13"	14"
B	15"	17 1/4"

TRANSFORMER BASE DETAILS

For mounting heights between those shown in the table, use the values in the table for the larger mounting height.

All breakaway bases shall meet the breakaway requirements of the 2001 Edition of the AASHTO "Standard Specifications for Structural Supports for Highway Signs, Luminaires and Traffic Signals," and shall have been tested by FHWA-approved methods. All bases shall have been structurally tested to resist 150% of the design moment.

Transformer bases shall be cast from aluminum, ASTM B108 or B26 Alloy 356.0-T6, or other material approved by the Engineer. Four hex head bolts with four H.H. nuts, four lock washers, four flat washers, and connecting and hold-down washers as recommended by the manufacturer, galvanized to ASTM A153 Class C or D, or B695 Class 50, shall be provided with each transformer base for connecting the pole. Bolts shall be ASTM A325 or approved equal. Nuts shall be ASTM A563 grade DH galvanized.

Bases shall be stamped, incised or by other approved permanent means, marked to show fabricator's name or logo, and model number. Such information shall be placed in a readily seen location, inside or outside the base, but shall not be placed on the door.

Doors for transformer bases shall be made of plastic, fiberglass or other non-metallic material approved by the Engineer and shall be attached with stainless steel screws or bolts. Transformer bases shall be cleaned by grit blast cleaning after heat treatment. Certification by the manufacturer of heat treatment shall be furnished with transformer bases. The certification shall show the metal alloy and temper and that the base meets those requirements, chemical and physical. The certification shall also show the material ASTM specification. Transformer bases shall be cast with a removable tab bar for material testing. Some bars may have been removed by the manufacturer for testing.

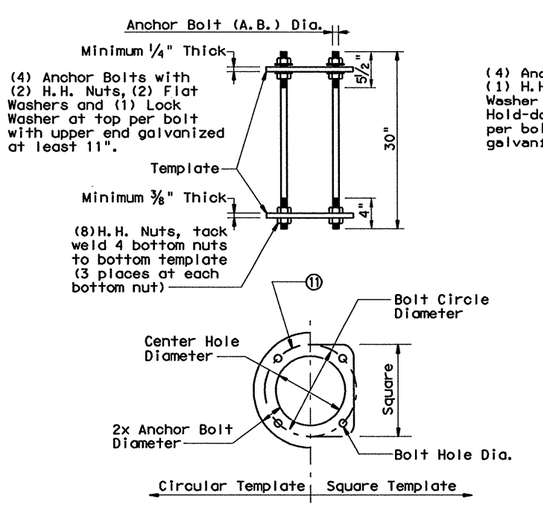

SHOE BASE ANCHOR BOLT ASSEMBLY

SHOE BASE ANCHOR BOLT ASSEMBLY TABLE					
MOUNTING HEIGHTS	A.B. Dia.	BOLT CIRCLE DIAMETER	SQUARE	CTR. HOLE DIAMETER	BOLT HOLE DIAMETER
20′ - 39′	1"	13"	13"	11"	1 1/16"
40′ - 50′	1 1/4"	15"	14 1/2"	12 1/2"	1 5/16"

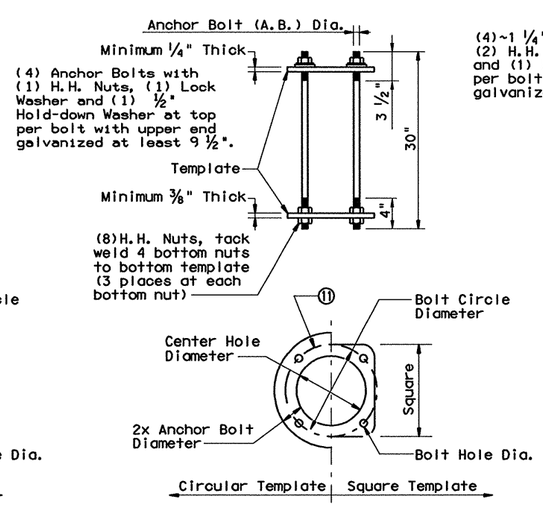

TRANSFORMER BASE ANCHOR BOLT ASSEMBLY

TRANSFORMER BASE ANCHOR BOLT ASSEMBLY TABLE					
MOUNTING HEIGHTS	A.B. Dia.	BOLT CIRCLE DIAMETER	SQUARE	CTR. HOLE DIAMETER	BOLT HOLE DIAMETER
20′ - 39′	1"	14"	14"	12"	1 1/16"
40′ - 50′	1 1/4"	17 1/4"	16 3/4"	14 3/4"	1 5/16"

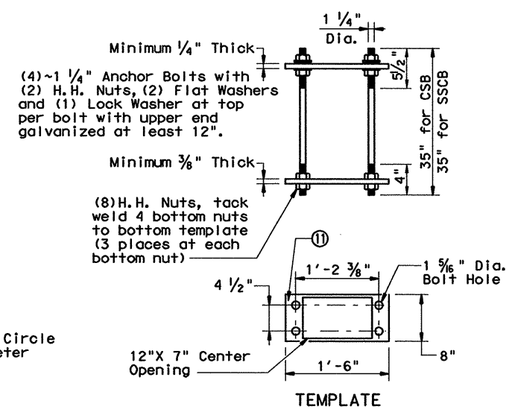

CONCRETE TRAFFIC BARRIER BASE ANCHOR BOLT ASSEMBLY

⑪ Anchor Bolt Templates need not be galvanized.

ANCHOR BOLT FABRICATION TOLERANCES TABLE	
DIMENSION	TOLERANCE
Length	± 1/2"
Threaded length	± 1/2"
Galvanized length (if required)	- 1/4"

SHEET 4 of 4

Texas Department of Transportation
Traffic Operations Division

ROADWAY ILLUMINATION POLES

RIP(4)-11

© TxDOT January 2007

DN: TXDOT	CK: TXDOT	DW: TXDOT	CK: TXDOT

REVISIONS
MOD 1/11 JSY/TGG Revised Anchor Bolt Assemblies

CONT	SECT	JOB	HIGHWAY
0091	04	055	SH 289

DIST	COUNTY	SHEET NO.
18	COLLIN	415E

73D

DATE: 4/12/2011 8:39:10 AM
FILE: U:\US 289, 0091-04-055\RIP11.DGN

R-201104-01

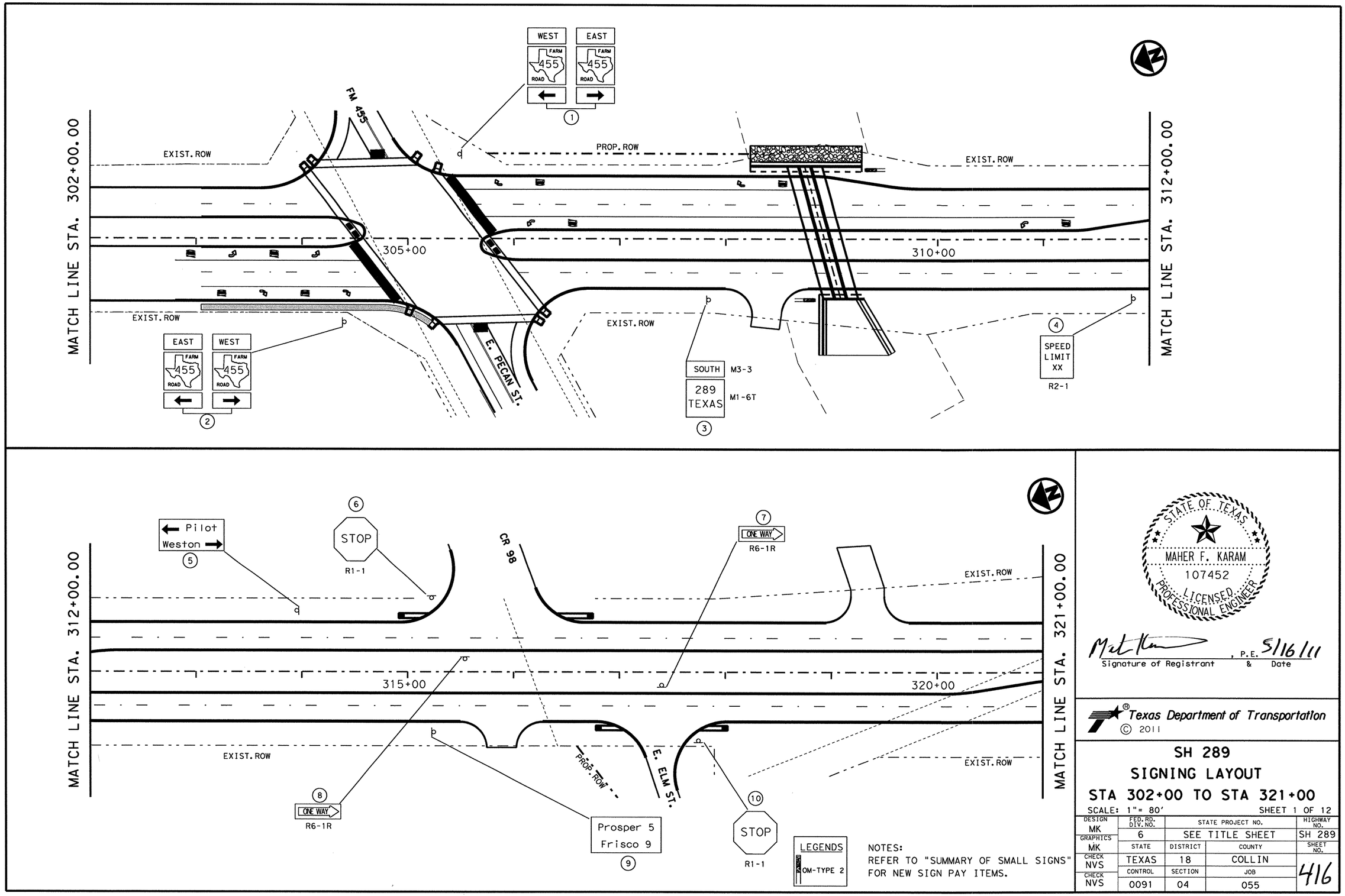

STATE OF TEXAS
MAHER F. KARAM
107452
LICENSED
PROFESSIONAL ENGINEER

Signature of Registrant & Date, P.E. 5/16/11

Texas Department of Transportation
© 2011

SH 289
SIGNING LAYOUT
STA 302+00 TO STA 321+00

SCALE: 1"= 80' SHEET 1 OF 12

DESIGN	FED.RD. DIV.NO.	STATE PROJECT NO.		HIGHWAY NO.
MK	6	SEE TITLE SHEET		SH 289
GRAPHICS	STATE	DISTRICT	COUNTY	SHEET NO.
MK	TEXAS	18	COLLIN	416
CHECK	CONTROL	SECTION	JOB	
NVS	0091	04	055	
CHECK				
NVS				

R-201104-01

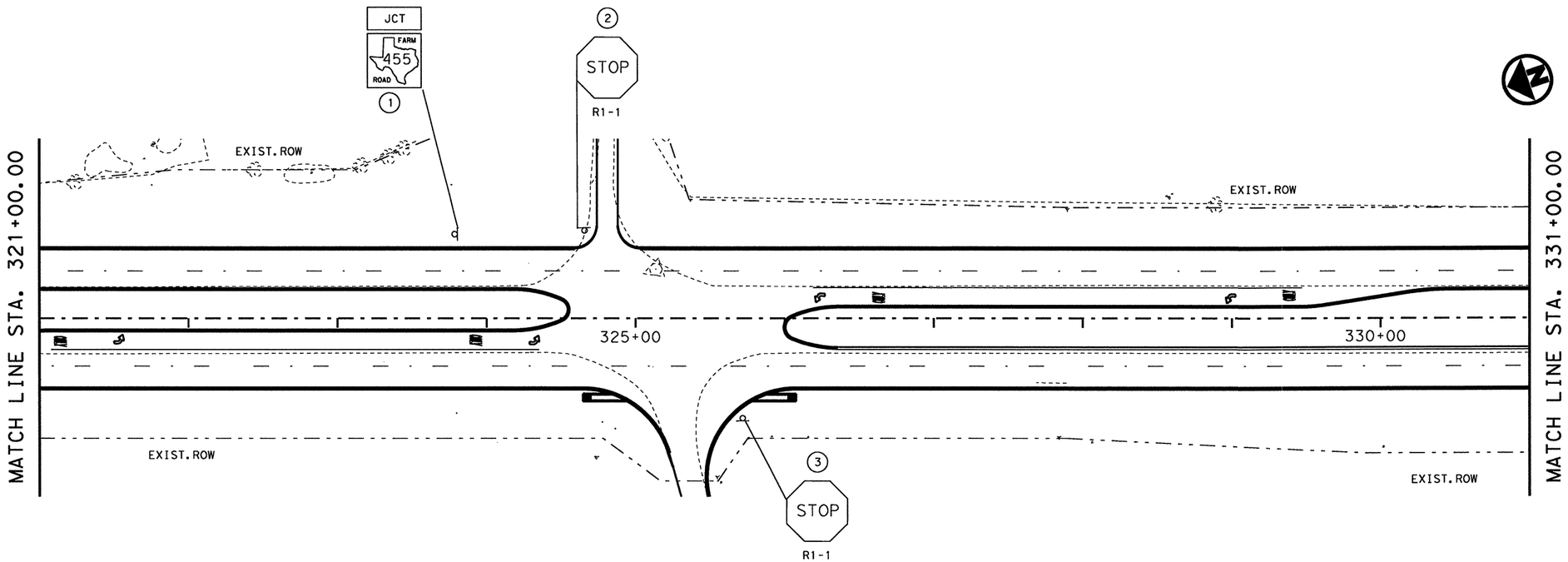

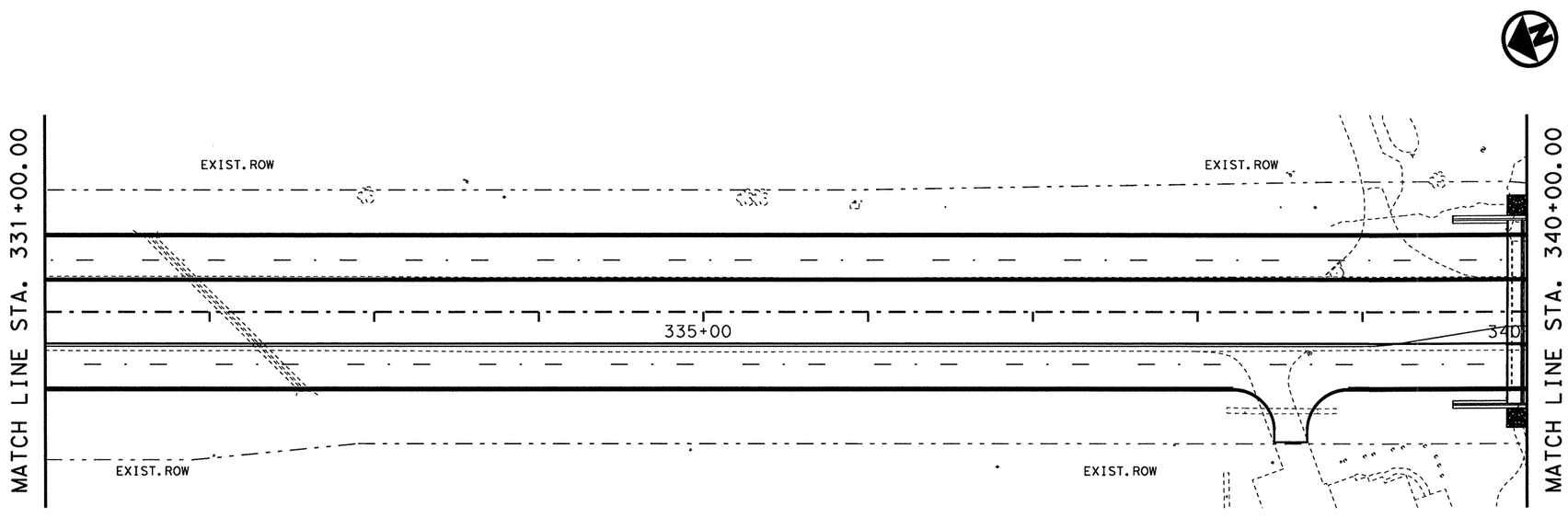

LEGENDS

OM-TYPE 2

NOTES:
REFER TO "SUMMARY OF SMALL SIGNS" FOR NEW SIGN PAY ITEMS.

STATE OF TEXAS
MAHER F. KARAM
107452
LICENSED PROFESSIONAL ENGINEER

Signature of Registrant & Date, P.E. 5/16/11

Texas Department of Transportation
© 2011

SH 289
SIGNING LAYOUT
STA 321+00 TO STA 340+00

SCALE: 1"= 80' SHEET 2 OF 12

DESIGN	FED. RD. DIV. NO.	STATE PROJECT NO.		HIGHWAY NO.
MK	6	SEE TITLE SHEET		SH 289
GRAPHICS MK	STATE	DISTRICT	COUNTY	SHEET NO.
CHECK NVS	TEXAS	18	COLLIN	417
CHECK NVS	CONTROL	SECTION	JOB	
	0091	04	055	

R-201104-01

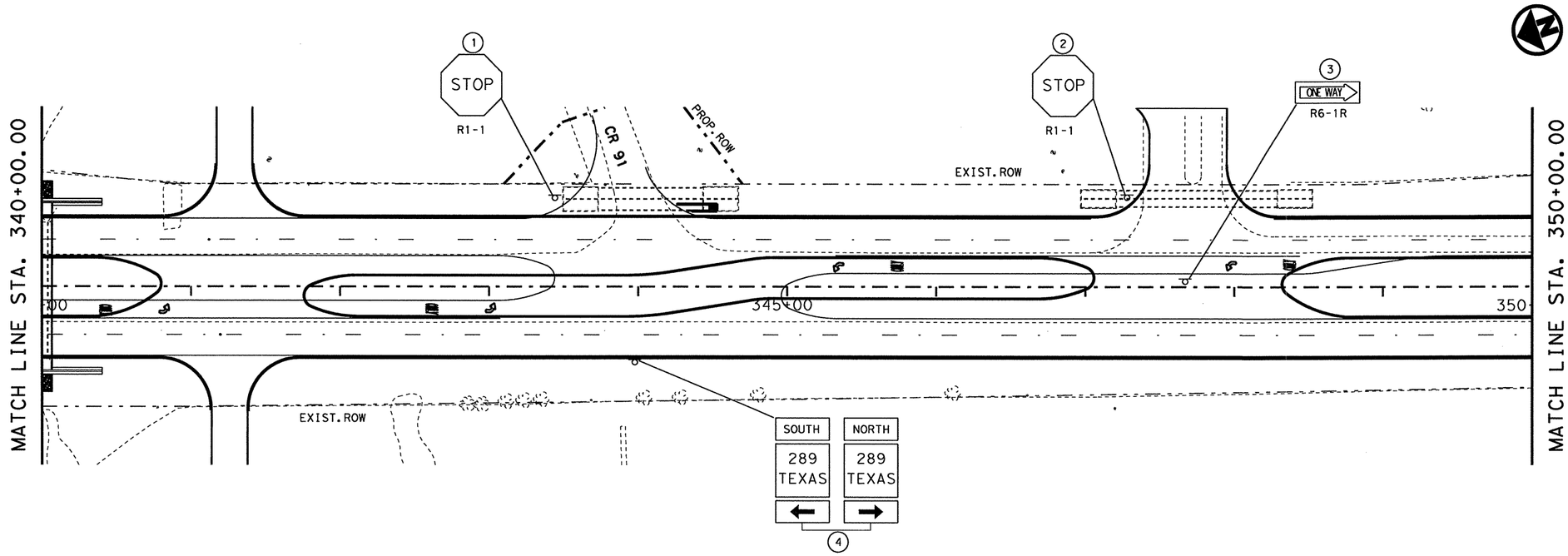

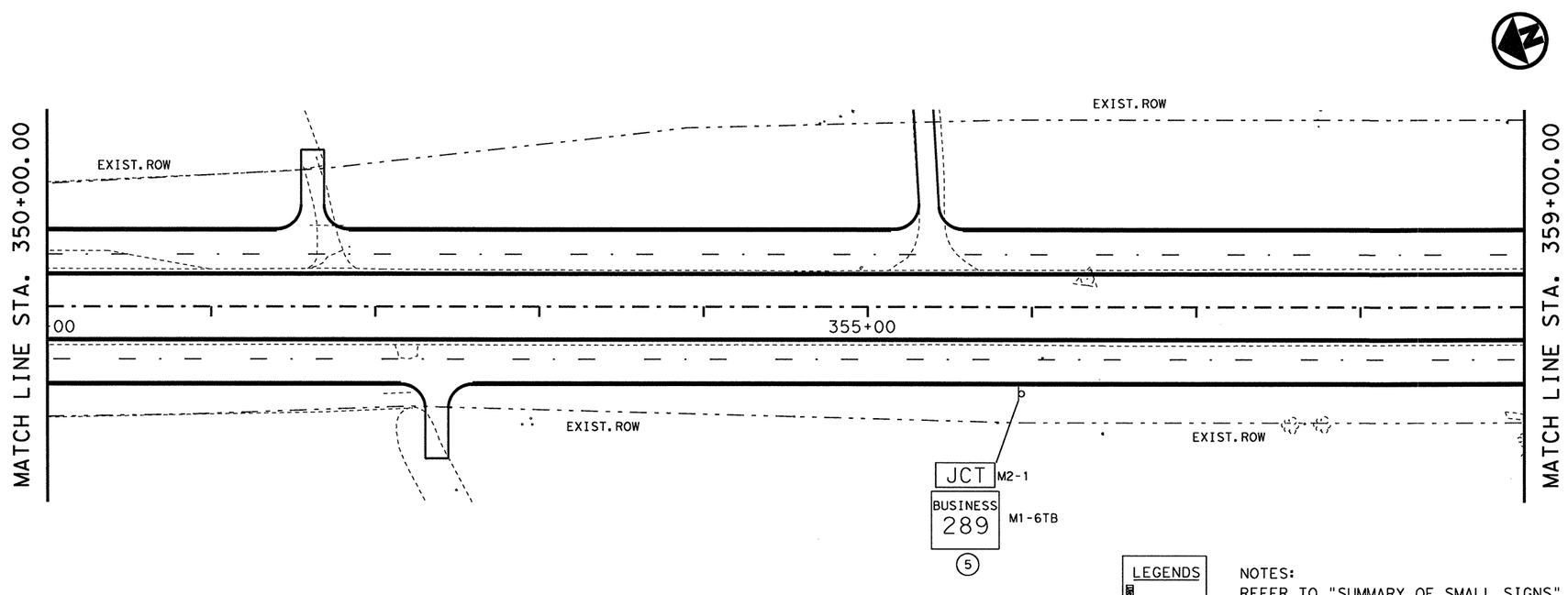

LEGENDS

OM-TYPE 2

NOTES:
REFER TO "SUMMARY OF SMALL SIGNS" FOR NEW SIGN PAY ITEMS.

STATE OF TEXAS
MAHER F. KARAM
107452
LICENSED
PROFESSIONAL ENGINEER

Signature of Registrant & Date, P.E. 5/16/11

Texas Department of Transportation
© 2011

SH 289
SIGNING LAYOUT
STA 340+00 TO STA 359+00

SCALE: 1"= 80'

SHEET 3 OF 12

DESIGN	FED. RD. DIV. NO.	STATE PROJECT NO.			HIGHWAY NO.
MK	6				SH 289
GRAPHICS	STATE	DISTRICT	COUNTY		SHEET NO.
MK	TEXAS	18	COLLIN		418
CHECK	CONTROL	SECTION	JOB		
NVS	0091	04	055		
CHECK NVS					

R-201104-01

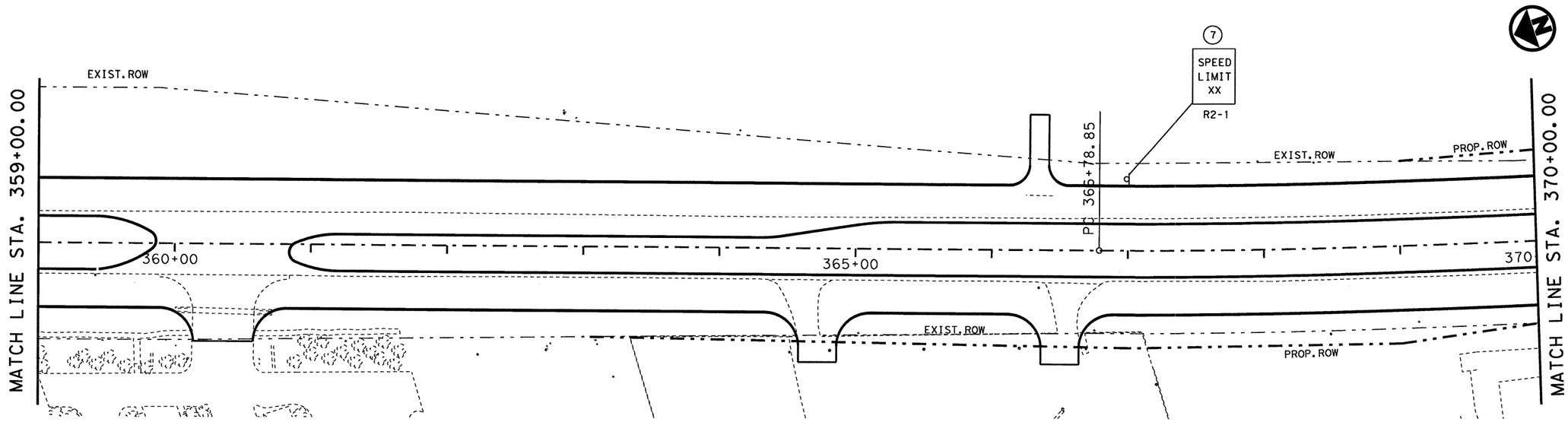

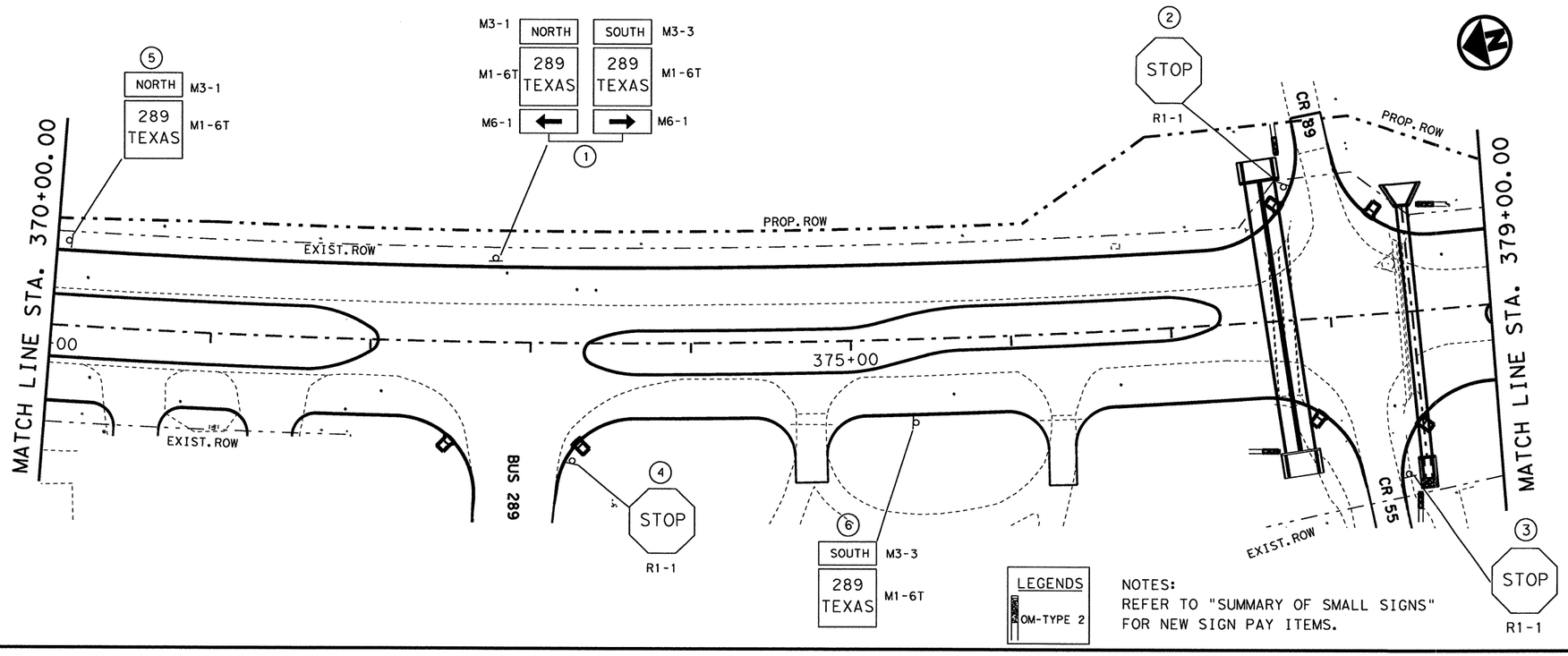

LEGENDS
OM-TYPE 2

NOTES:
REFER TO "SUMMARY OF SMALL SIGNS" FOR NEW SIGN PAY ITEMS.

STATE OF TEXAS
MAHER F. KARAM
107452
LICENSED PROFESSIONAL ENGINEER

Signature of Registrant, P.E. & Date 5/16/11

Texas Department of Transportation
© 2011

SH 289
SIGNING LAYOUT
STA 359+00 TO STA 379+00

SCALE: 1"= 80'

SHEET 4 OF 12

DESIGN	FED. RD. DIV. NO.	STATE PROJECT NO.		HIGHWAY NO.
MK	6	SEE TITLE SHEET		SH 289
GRAPHICS	STATE	DISTRICT	COUNTY	SHEET NO.
MK	TEXAS	18	COLLIN	4/9
CHECK	CONTROL	SECTION	JOB	
NVS	0091	04	055	
CHECK NVS				

R-201104-01

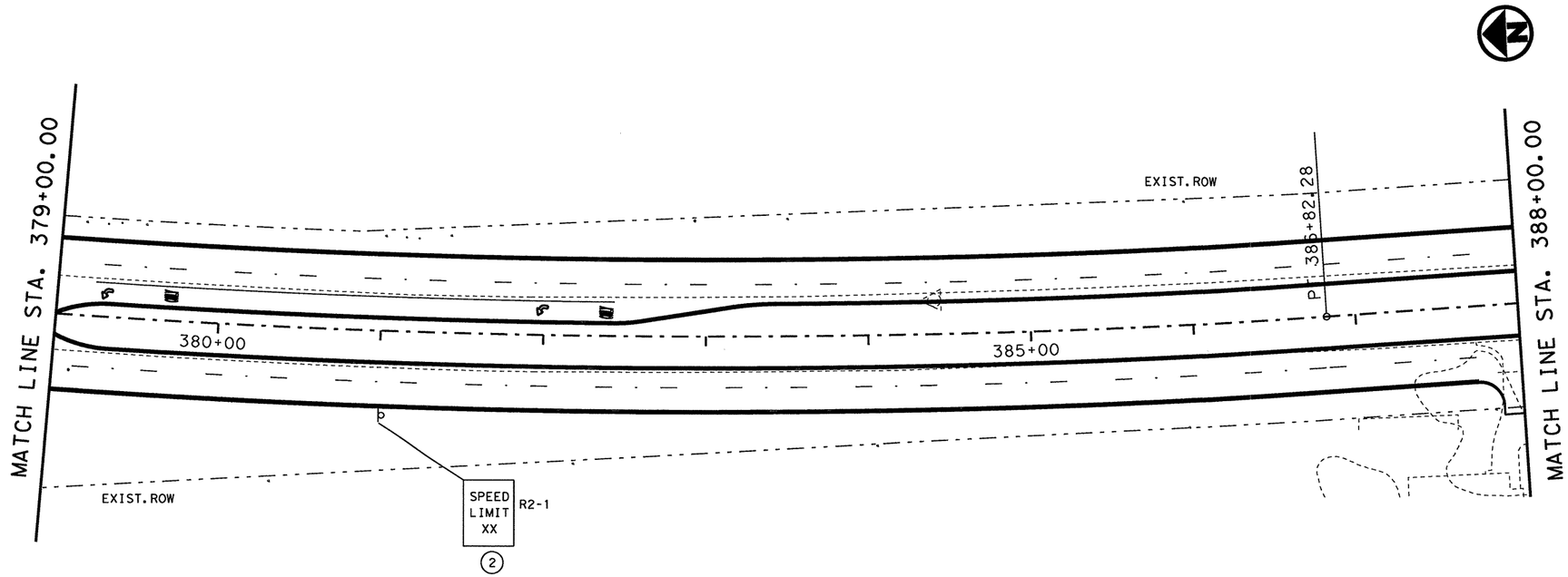

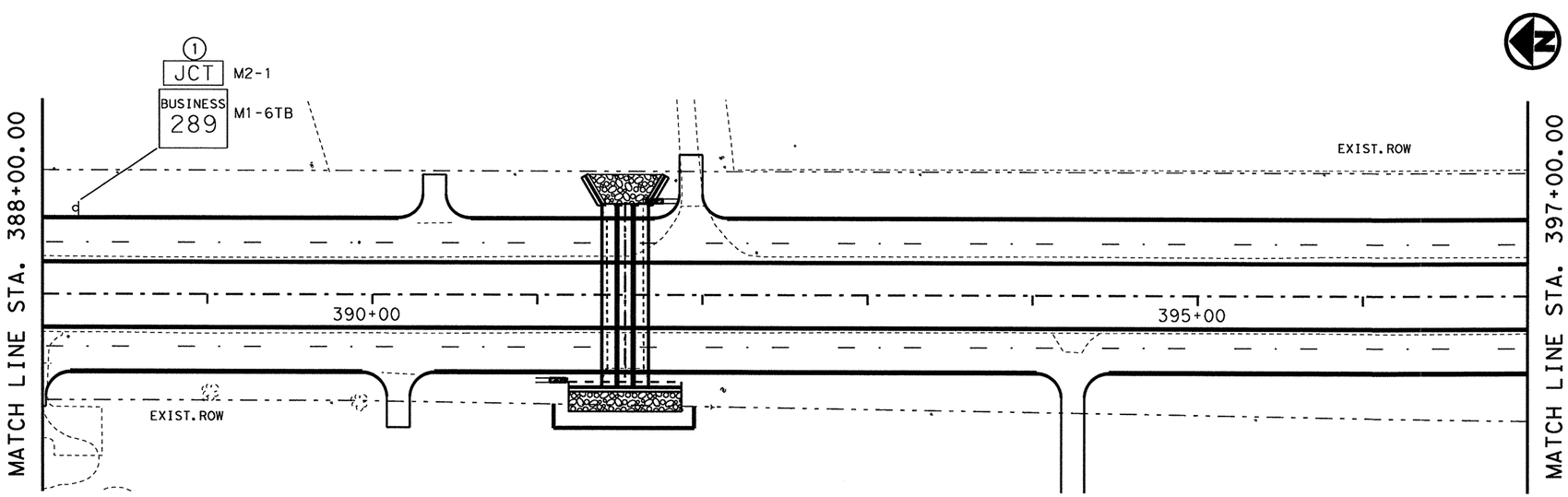

LEGENDS

OM-TYPE 2

NOTES:
REFER TO "SUMMARY OF SMALL SIGNS" FOR NEW SIGN PAY ITEMS.

STATE OF TEXAS
MAHER F. KARAM
107452
LICENSED PROFESSIONAL ENGINEER

Signature of Registrant & Date, P.E. 5/16/11

Texas Department of Transportation
© 2011

SH 289
SIGNING LAYOUT
STA 379+00 TO STA 397+00

SCALE: 1"= 80' SHEET 5 OF 12

DESIGN	FED. RD. DIV. NO.	STATE PROJECT NO.		HIGHWAY NO.
MK	6	SEE TITLE SHEET		SH 289
GRAPHICS MK	STATE	DISTRICT	COUNTY	SHEET NO.
CHECK NVS	TEXAS	18	COLLIN	420
CHECK NVS	CONTROL	SECTION	JOB	
	0091	04	055	

R-201104-01

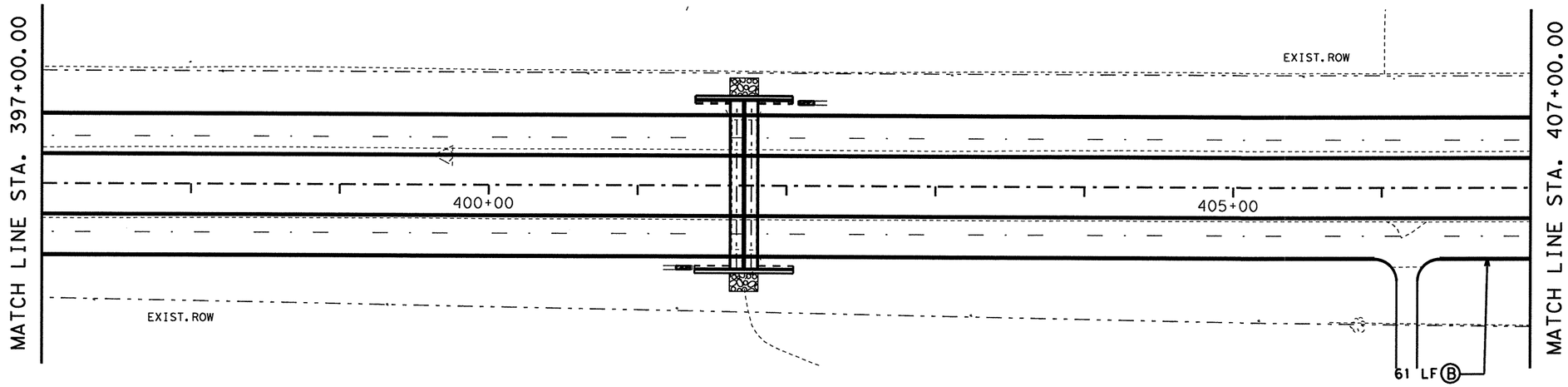

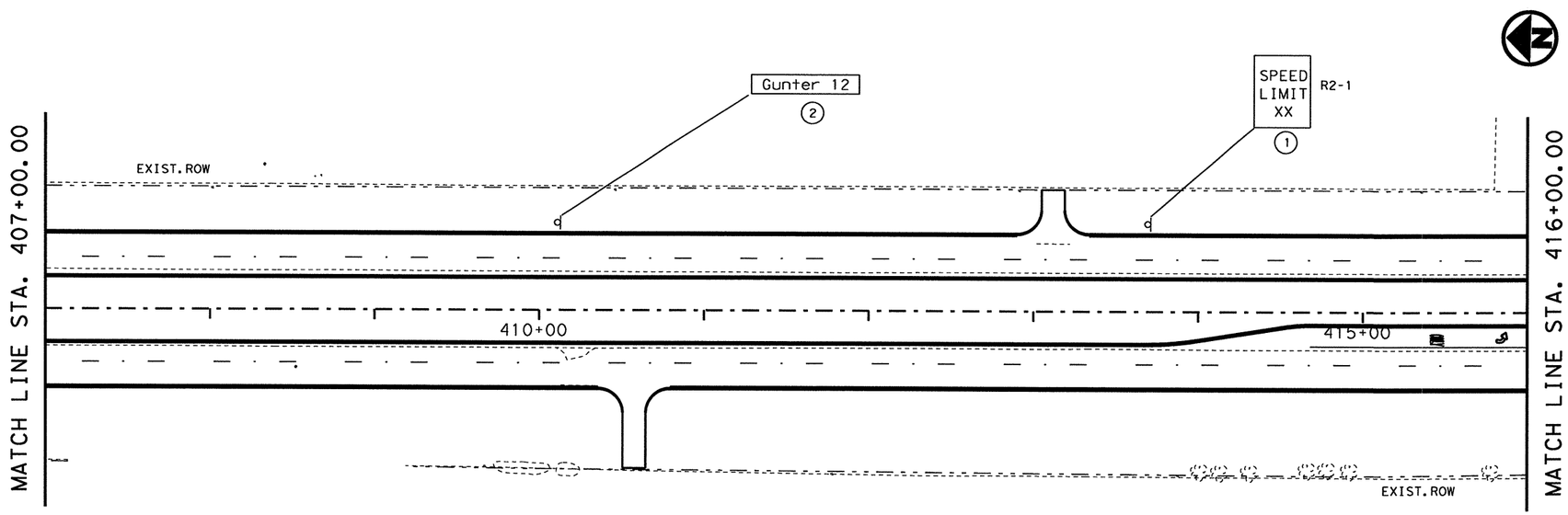

LEGENDS

OM-TYPE 2

NOTES:
REFER TO "SUMMARY OF SMALL SIGNS" FOR NEW SIGN PAY ITEMS.

STATE OF TEXAS
MAHER F. KARAM
107452
LICENSED
PROFESSIONAL ENGINEER

Signature of Registrant & Date, P.E. 5/16/11

Texas Department of Transportation
© 2011

SH 289
SIGNING LAYOUT
STA 397+00 TO STA 416+00

SCALE: 1"= 80' SHEET 6 OF 12

DESIGN	FED. RD. DIV. NO.	STATE PROJECT NO.		HIGHWAY NO.
MK	6	SEE TITLE SHEET		SH 289
GRAPHICS	STATE	DISTRICT	COUNTY	SHEET NO.
MK	TEXAS	18	COLLIN	421
CHECK	CONTROL	SECTION	JOB	
NVS	0091	04	055	
CHECK NVS				

R-201104-01

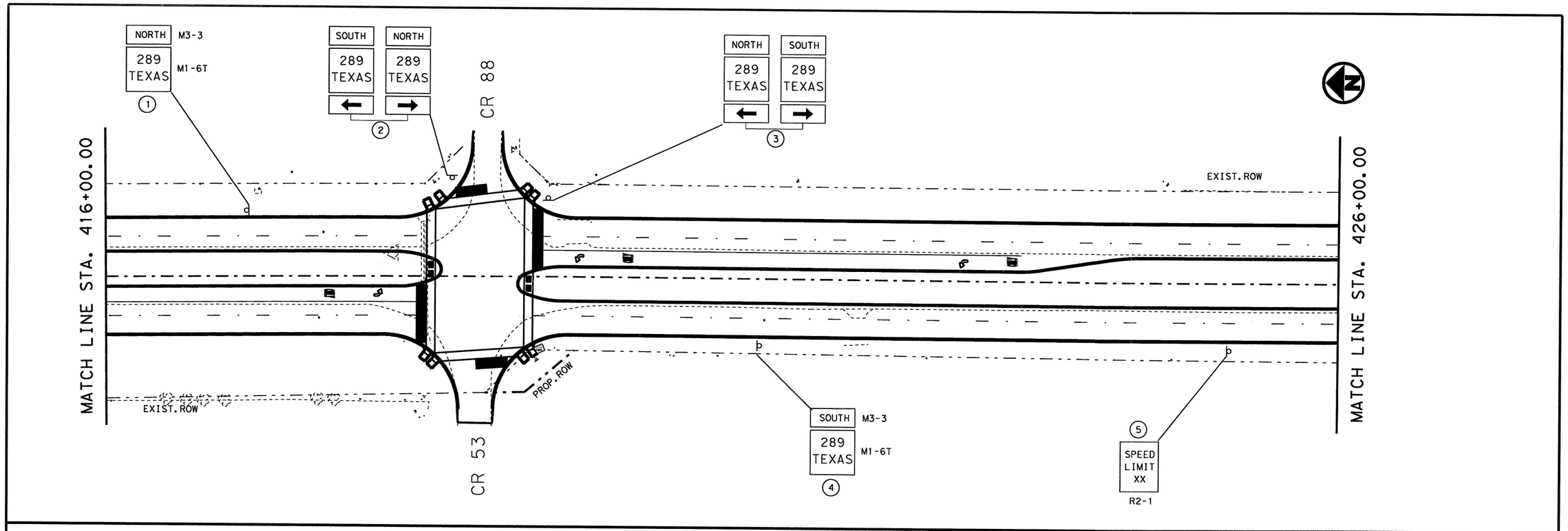

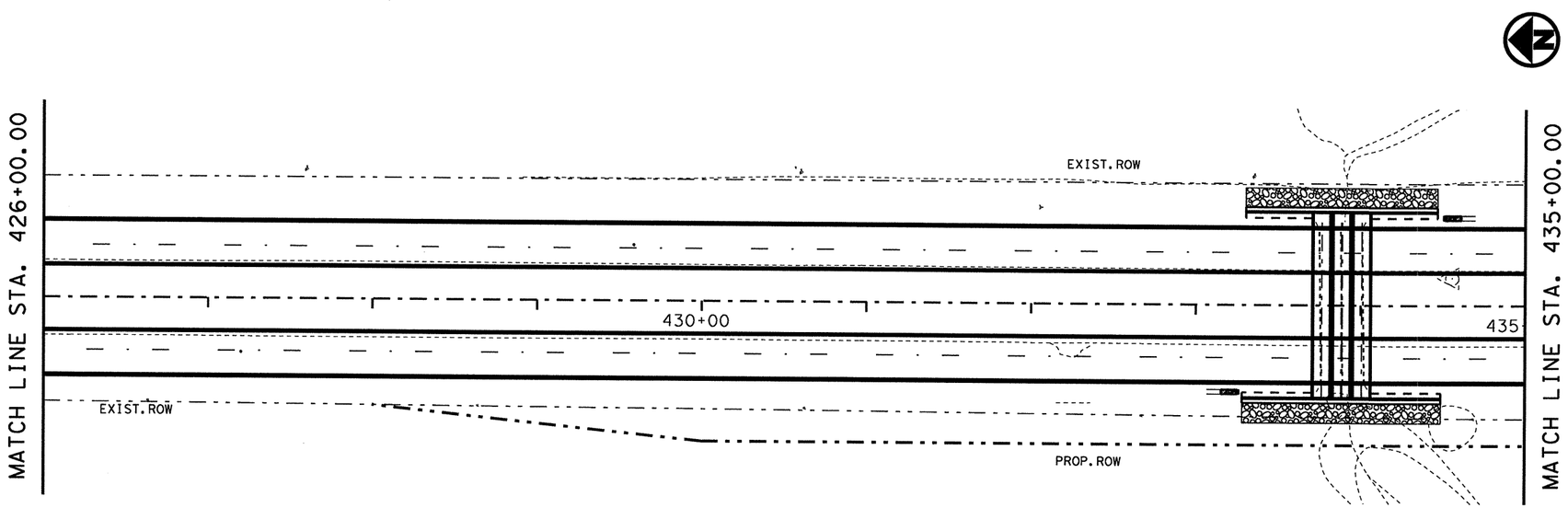

LEGENDS

OM-TYPE 2

NOTES:
REFER TO "SUMMARY OF SMALL SIGNS" FOR NEW SIGN PAY ITEMS.

STATE OF TEXAS
MAHER F. KARAM
107452
LICENSED
PROFESSIONAL ENGINEER

Signature of Registrant & Date, P.E. 5/16/11

Texas Department of Transportation
© 2011

SH 289
SIGNING LAYOUT
STA 416+00 TO STA 435+00

SCALE: 1"= 80'

SHEET 7 OF 12

DESIGN	FED. RD. DIV. NO.	STATE PROJECT NO.		HIGHWAY NO.
MK	6	SEE TITLE SHEET		SH 289
GRAPHICS MK	STATE	DISTRICT	COUNTY	SHEET NO.
CHECK NVS	TEXAS	18	COLLIN	422
CHECK NVS	CONTROL	SECTION	JOB	
	0091	04	055	

R-201104-01

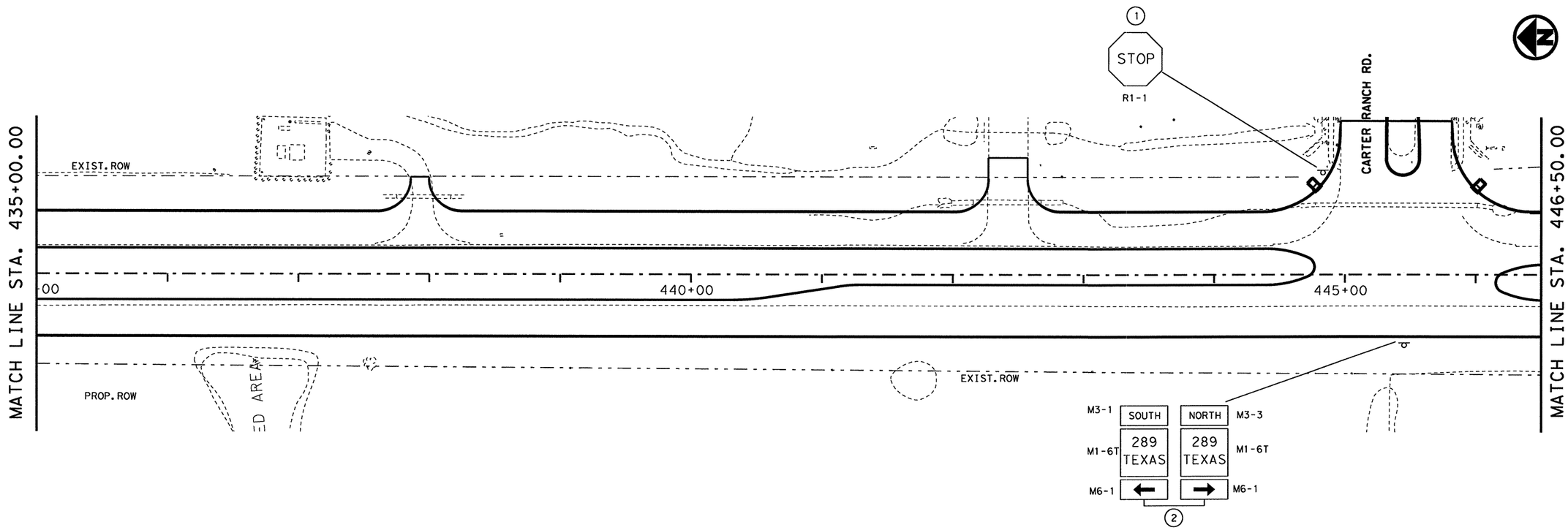

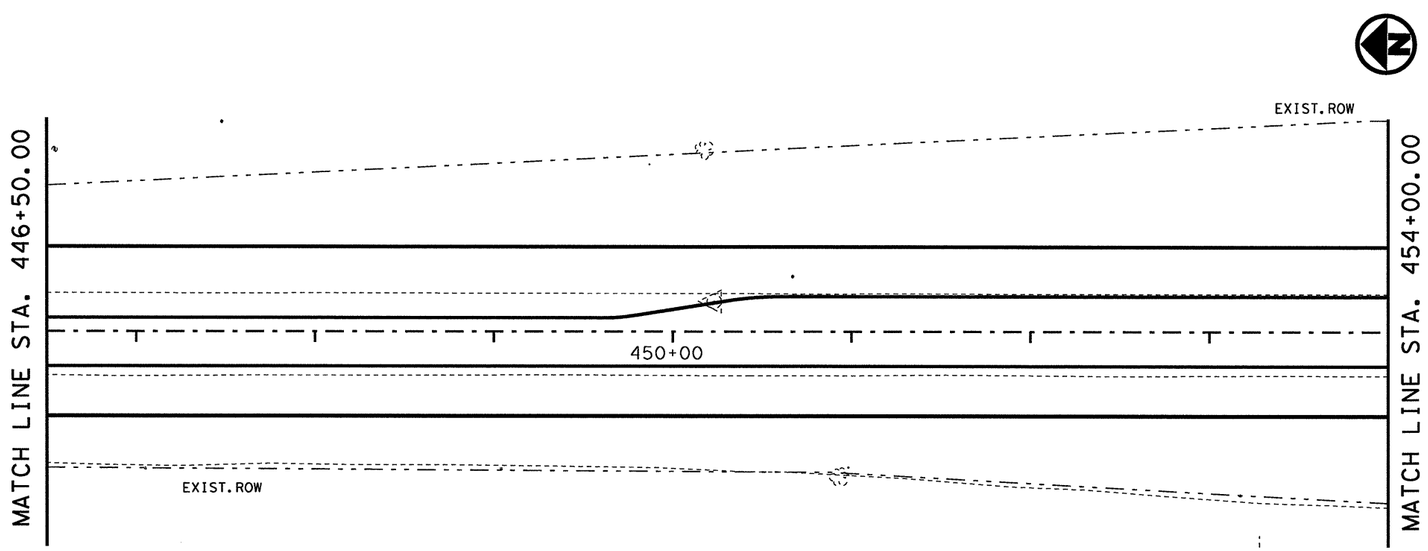

LEGENDS

OM-TYPE 2

NOTES:
REFER TO "SUMMARY OF SMALL SIGNS" FOR NEW SIGN PAY ITEMS.

STATE OF TEXAS
MAHER F. KARAM
107452
LICENSED PROFESSIONAL ENGINEER

Signature of Registrant, P.E. & Date 4/2/11

Texas Department of Transportation
© 2011

SH 289
SIGNING LAYOUT
STA 435+00 TO STA 454+00

SCALE: 1"= 80' SHEET 8 OF 12

DESIGN	FED. RD. DIV. NO.	STATE PROJECT NO.		HIGHWAY NO.
MK	6	SEE TITLE SHEET		SH 289
GRAPHICS MK	STATE	DISTRICT	COUNTY	SHEET NO.
CHECK NVS	TEXAS	18	COLLIN	423
CHECK NVS	CONTROL	SECTION	JOB	
	0091	04	055	

R-201104-01

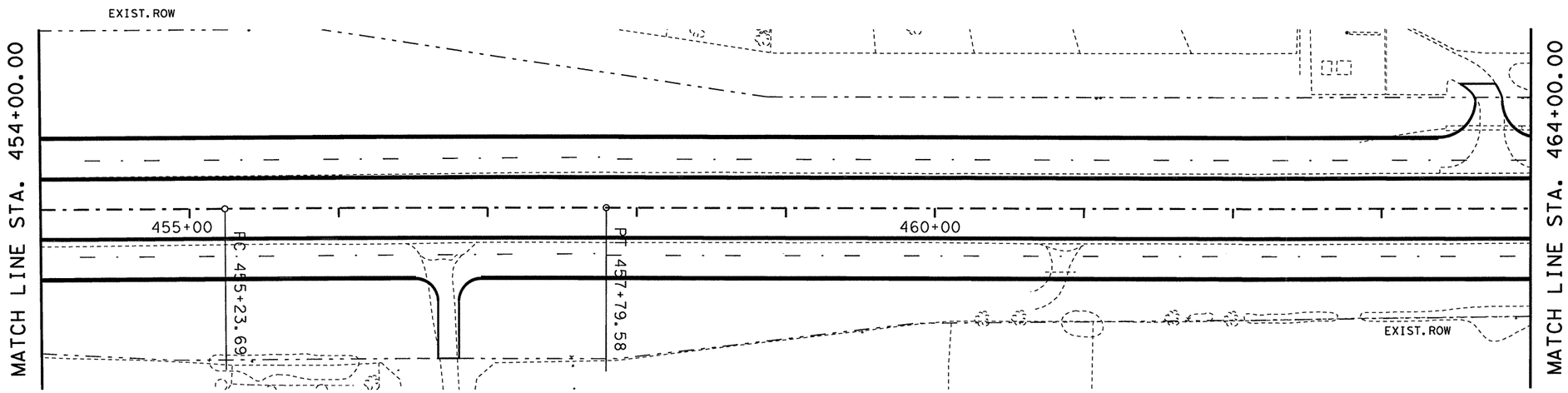

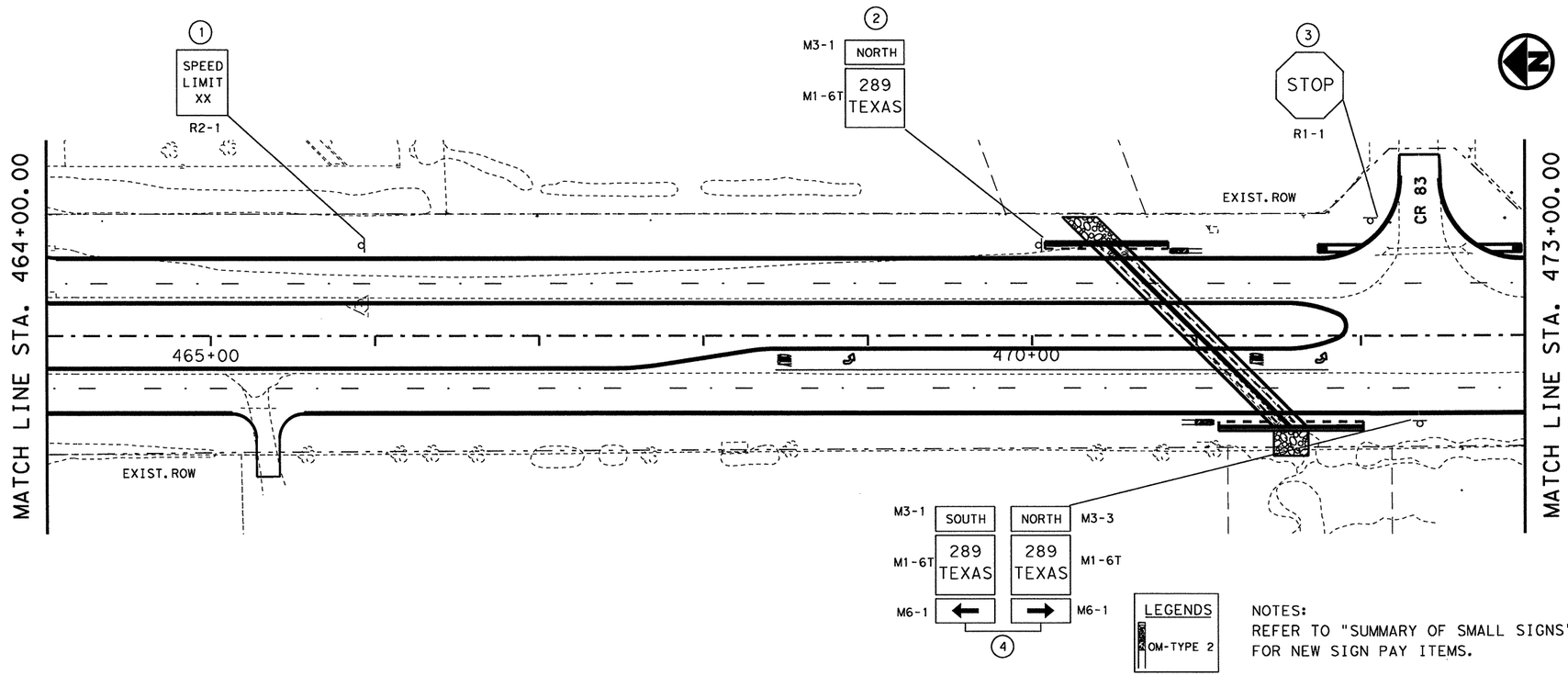

NOTES:
REFER TO "SUMMARY OF SMALL SIGNS" FOR NEW SIGN PAY ITEMS.

STATE OF TEXAS
MAHER F. KARAM
107452
LICENSED PROFESSIONAL ENGINEER

Signature of Registrant & Date, P.E. 5/16/11

Texas Department of Transportation
© 2011

SH 289
SIGNING LAYOUT
STA 454+00 TO STA 473+00

SCALE: 1"= 80'

SHEET 9 OF 12

DESIGN	FED. RD. DIV. NO.	STATE PROJECT NO.		HIGHWAY NO.
MK	6	SEE TITLE SHEET		SH 289
GRAPHICS	STATE	DISTRICT	COUNTY	SHEET NO.
MK	TEXAS	18	COLLIN	424
CHECK	CONTROL	SECTION	JOB	
NVS	0091	04	055	
CHECK				
NVS				

R-201104-01

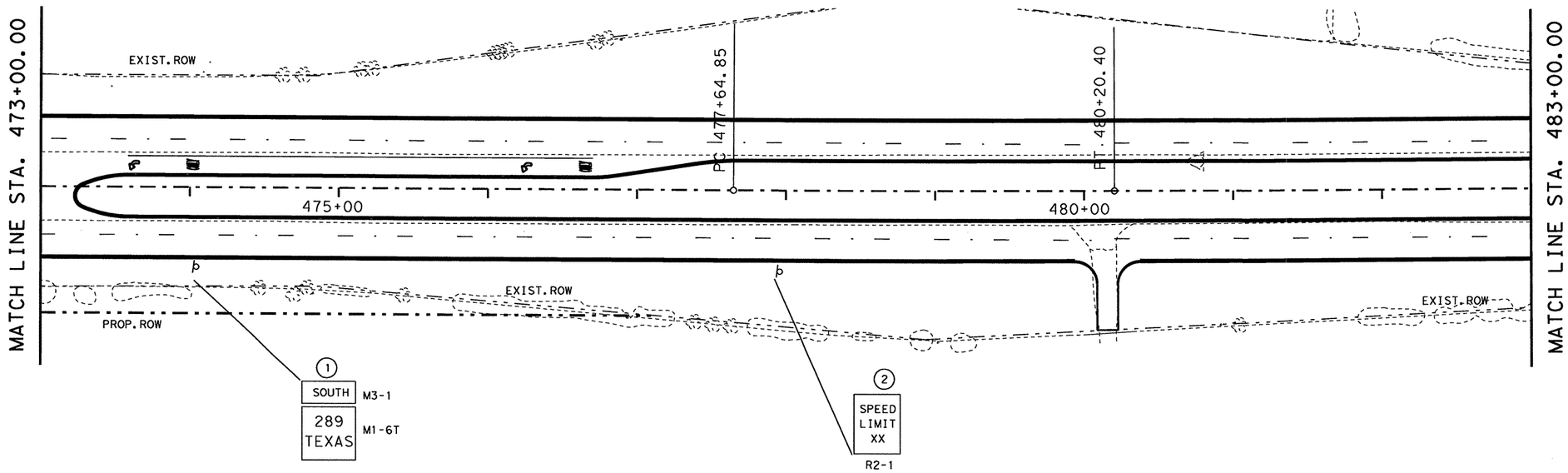

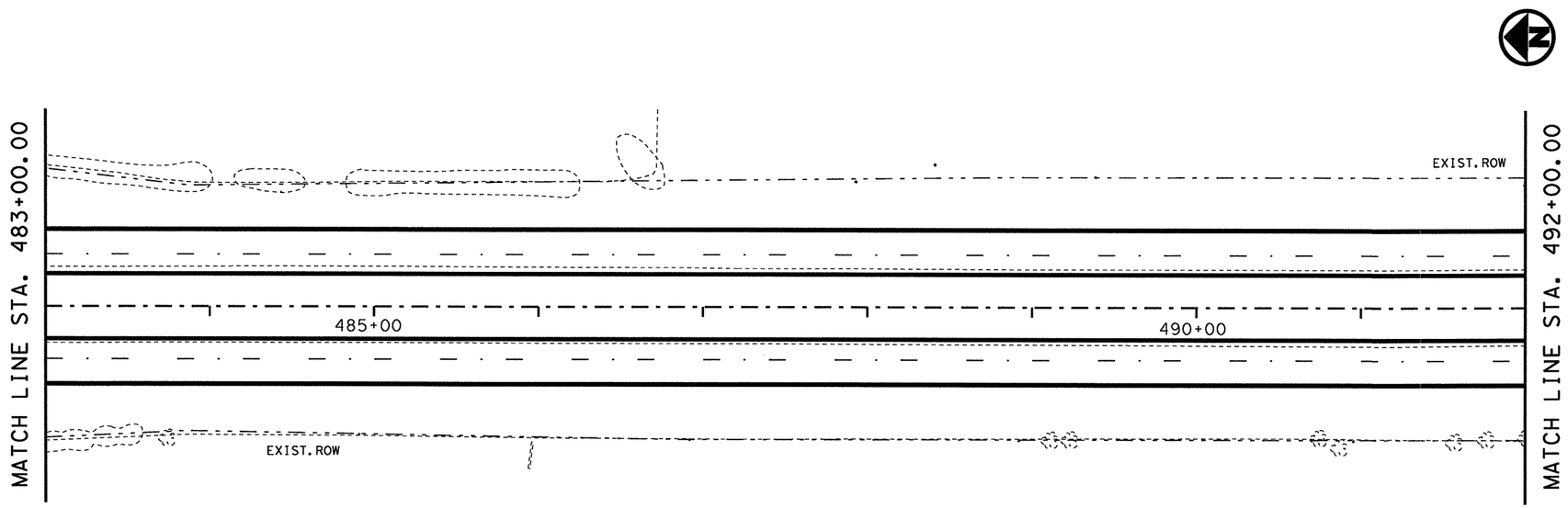

LEGENDS

OM-TYPE 2

NOTES:
REFER TO "SUMMARY OF SMALL SIGNS" FOR NEW SIGN PAY ITEMS.

STATE OF TEXAS
MAHER F. KARAM
107452
LICENSED
PROFESSIONAL ENGINEER

Signature of Registrant & Date, P.E. 5/16/11

Texas Department of Transportation
© 2011

SH 289
SIGNING LAYOUT
STA 473+00 TO STA 492+00

SCALE: 1"= 80'

SHEET 10 OF 12

DESIGN	FED. RD. DIV. NO.	STATE PROJECT NO.		HIGHWAY NO.
MK	6	SEE TITLE SHEET		SH 289
GRAPHICS MK	STATE	DISTRICT	COUNTY	SHEET NO.
CHECK NVS	TEXAS	18	COLLIN	425
CHECK NVS	CONTROL	SECTION	JOB	
	0091	04	055	

R-201104-01

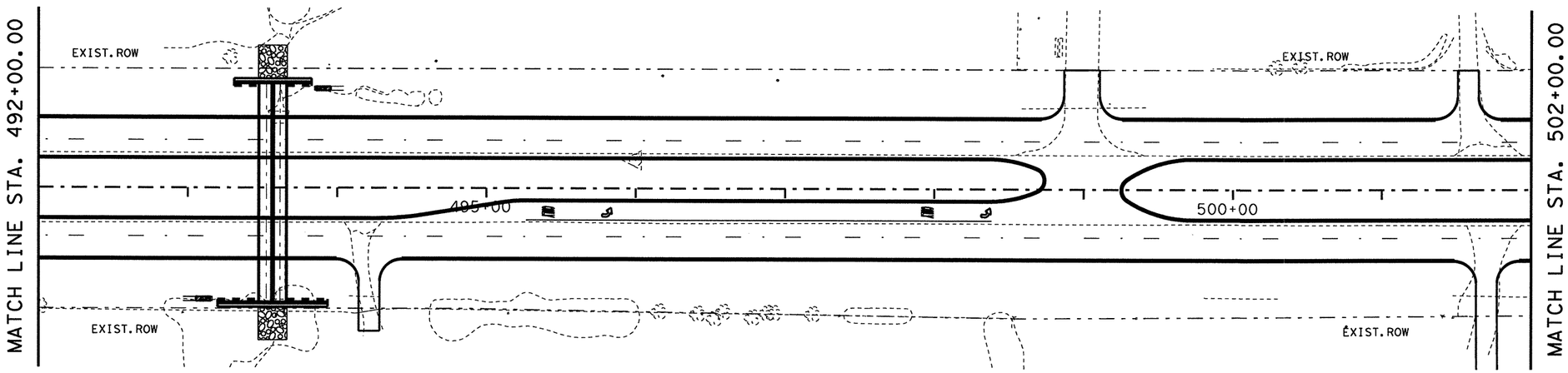

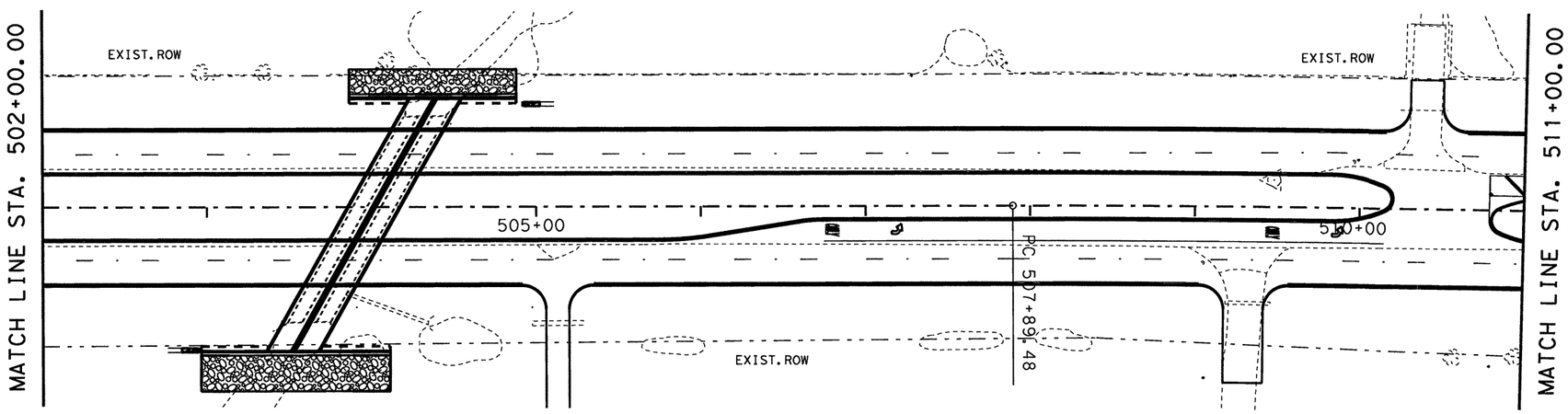

LEGENDS

OM-TYPE 2

NOTES:
REFER TO "SUMMARY OF SMALL SIGNS" FOR NEW SIGN PAY ITEMS.

STATE OF TEXAS
MAHER F. KARAM
107452
LICENSED
PROFESSIONAL ENGINEER

Signature of Registrant & Date, P.E. 5/16/11

Texas Department of Transportation
© 2011

SH 289
SIGNING LAYOUT
STA 492+00 TO STA 511+00

SCALE: 1"= 80'

SHEET 11 OF 12

DESIGN	FED. RD. DIV. NO.	STATE PROJECT NO.		HIGHWAY NO.
MK	6	SEE TITLE SHEET		SH 289
GRAPHICS MK	STATE	DISTRICT	COUNTY	SHEET NO.
CHECK NVS	TEXAS	18	COLLIN	426
CHECK NVS	CONTROL	SECTION	JOB	
	0091	04	055	

R-201104-01

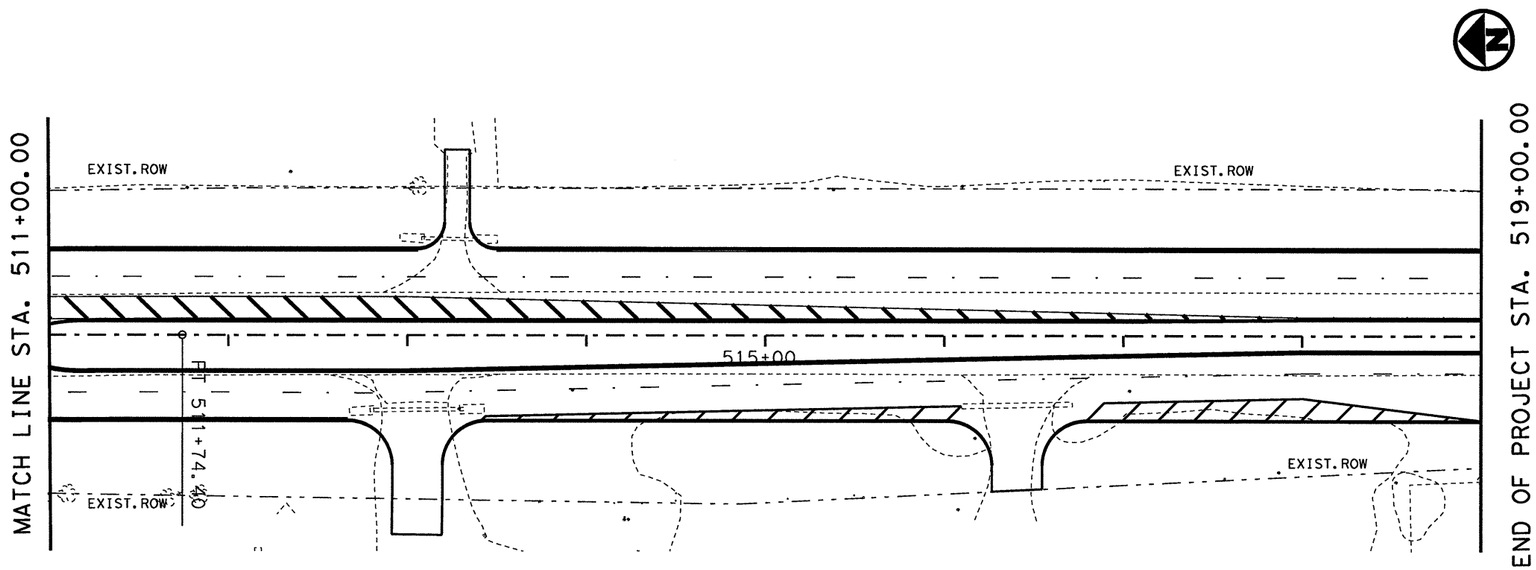

LEGENDS

OM-TYPE 2

NOTES:
REFER TO "SUMMARY OF SMALL SIGNS"
FOR NEW SIGN PAY ITEMS.

STATE OF TEXAS
MAHER F. KARAM
107452
LICENSED
PROFESSIONAL ENGINEER

Signature of Registrant, P.E. & Date 4/7/11

Texas Department of Transportation
© 2011

SH 289
SIGNING LAYOUT
STA 511+00 TO STA 519+00

SCALE: 1"= 80'
SHEET 12 OF 12

DESIGN	FED.RD. DIV.NO.	STATE PROJECT NO.		HIGHWAY NO.
MK	6	SEE TITLE SHEET		SH 289
GRAPHICS MK	STATE	DISTRICT	COUNTY	SHEET NO.
CHECK NVS	TEXAS	18	COLLIN	427
CHECK NVS	CONTROL	SECTION	JOB	
	0091	04	055	

R-201104-01

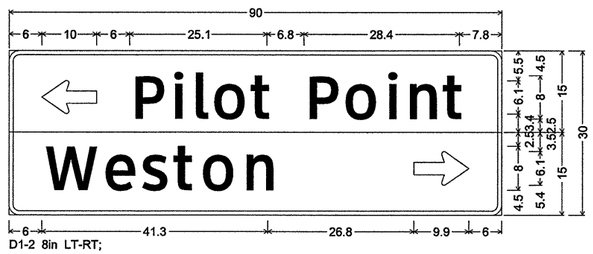

D1-2 8in LT-RT;
1.9" Radius, 0.8" Border, White on Green;
Standard Arrow Custom 10.0" X 6.1" 180°; [Pilot Point] ClearviewHwy-3-W;
1.9" Radius, 0.8" Border, White on Green;
[Weston] ClearviewHwy-3-W; Standard Arrow Custom 10.0" X 6.1" 0°;

SHEET 1 SIGN 5

D2-2 8in;
1.9" Radius, 0.8" Border, White on Green;
[Prosper] ClearviewHwy-3-W; [5] ClearviewHwy-3-W;
1.9" Radius, 0.8" Border, White on Green;
[Frisco] ClearviewHwy-3-W; [9] ClearviewHwy-3-W;

SHEET 1 SIGN 9

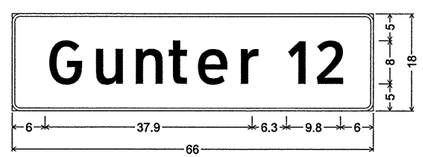

D2-1 8in; 1.5" Radius, 0.5" Border, White on Green;
[Gunter] ClearviewHwy-3-W; [12] ClearviewHwy-3-W;

SHEET 6 SIGN 2

STATE OF TEXAS
FELICIA R. CORTEZ
101035
LICENSED
PROFESSIONAL ENGINEER

Signature P.E. Date 3-12-11

Texas Department of Transportation
© 2011

GUIDE SIGN DETAILS

SCALE: 1"= N.T.S. SHEET 1 OF 1

DESIGN	FED. RD. DIV. NO.	STATE PROJECT NO.		HIGHWAY NO.
FRC	6			SH 289
GRAPHICS	STATE	DISTRICT	COUNTY	SHEET NO.
FRC	TEXAS	DALLAS	COLLIN	428
CHECK	CONTROL	SECTION	JOB	
CHECK	0091	04	055	

R-201104-01

DISCLAIMER: The use of this standard is governed by the "Texas Engineering Practice Act". No warranty of any kind is made by TxDOT for any purpose whatsoever. TxDOT assumes no responsibility for the conversion of this standard to other formats or for incorrect results or damages resulting from its use.

SIGN SUPPORT DESCRIPTIVE CODES

(Descriptive Codes correspond to project estimate and quantities sheets)

SM RD SGN ASSM TY XXXXX(X)XX(X-XXXX)

Post Type

FRP = Fiberglass Reinforced Plastic Pipe (see SMD(FRP))
TWT = Thin-Walled Tubing (see SMD(TWT))
10BWG = 10 BWG Tubing (see SMD(SLIP-1) to (SLIP-3))
S80 = Schedule 80 Pipe (see SMD(SLIP-1) to (SLIP-3))

Number of Posts (1 or 2)

Anchor Type

UA = Universal Anchor - Concreted (see SMD(FRP) and (TWT))
UB = Universal Anchor - Bolted down (see SMD(FRP) and (TWT))
WS = Wedge Anchor Steel - (see SMD(TWT))
WP = Wedge Anchor Plastic (see SMD(TWT))
SA = Slipbase - Concreted (see SMD(SLIP-1) to (SLIP-3))
SB = Slipbase - Bolted Down (see SMD(SLIP-1) to (SLIP-3))

Sign Mounting Designation

P = Prefab. "Plain" (see SMD(SLIP-1) to (SLIP-3), (TWT), (FRP))
T = Prefab. "T" (see SMD(SLIP-1) to (SLIP-3), (TWT))
U = Prefab. "U" (see SMD(SLIP-1) to (SLIP-3))
IF REQUIRED
1EXT or 2EXT = Number of Extensions (see SMD(SLIP-1) to (SLIP-3), (TWT))
BM = Extruded Wind Beam (see SMD(SLIP-1) to (SLIP-3))
WC = 1.12 #/ft Wing Channel (see SMD(SLIP-1) to (SLIP-3))
EXAL = Extruded Aluminum Sign Panels (see SMD(SLIP-1))

REQUIRED CLEARANCE FOR BREAKAWAY SUPPORT

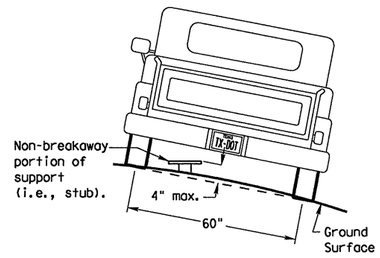

To avoid vehicle undercarriage snagging, any substantial remains of a breakaway support, when it is broken away, should not project more than 4 inches above a 60-inch chord (i.e., typical space between wheel paths).

No more than 2 sign posts should be located within a 7 ft. circle.

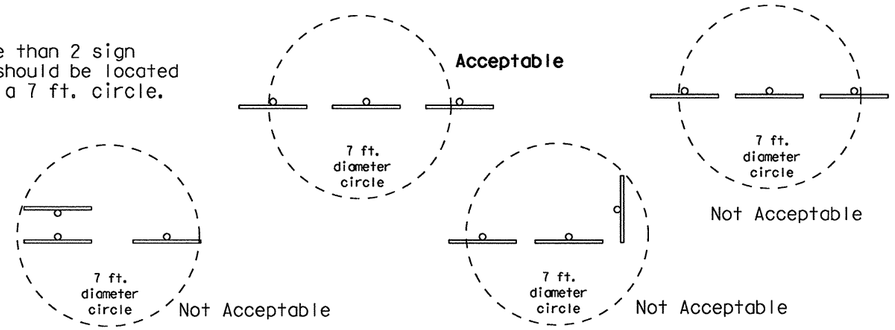

SIGN LOCATION

PAVED SHOULDERS

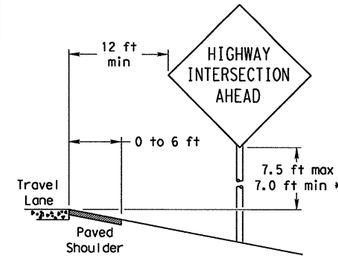

LESS THAN 6 FT. WIDE

When the shoulder is 6 ft. or less in width, the sign must be placed at least 12 ft. from the edge of the travel lane.

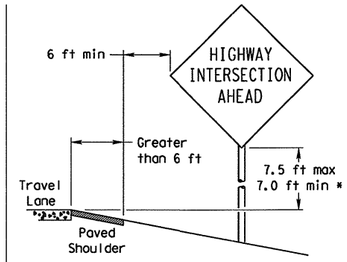

GREATER THAN 6 FT. WIDE

When the shoulder is greater than 6 ft in width, the sign must be placed at least 6 ft. from the edge of the shoulder.

BEHIND BARRIER

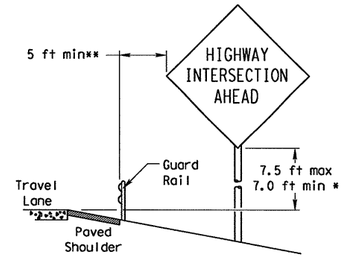

BEHIND GUARDRAIL

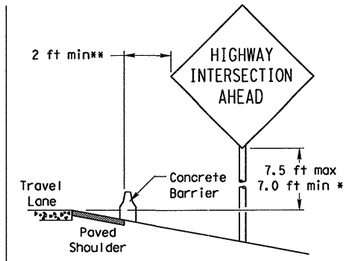

BEHIND CONCRETE BARRIER

**Sign clearance based on distance required for proper guard rail or concrete barrier performance.

T-INTERSECTION

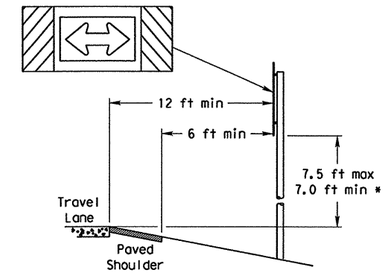

When this sign is needed at the end of a two-lane, two way roadway, the right edge of the sign should be in line with the centerline of the roadway. Place as close to ROW as practical.

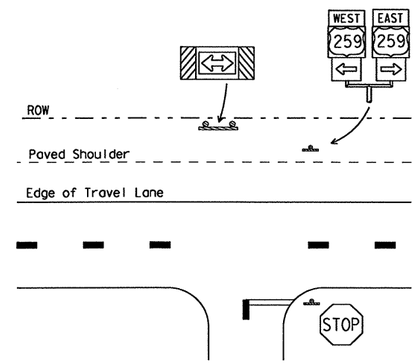

* Signs shall be mounted using the following condition that results in the greatest sign elevation:

(1) a minimum of 7 to a maximum of 7.5 feet above the edge of the travel lane or

(2) a minimum of 7 to a maximum of 7.5 feet above the grade at the base of the support when sign is installed on the backslope.

The maximum values may be increased when directed by the Engineer.

See the Traffic Operations Division website for detailed drawings of sign clamps, Triangular Slipbase System components and Wedge Anchor System components.

The website address is:
http://www.txdot.gov/publications/traffic.htm

TYPICAL SIGN ATTACHMENT DETAIL

Single Signs

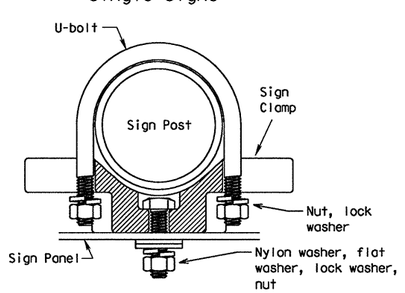

Bolts used to mount sign panels to the clamp are 5/16-18 UNC galvanized square head with nut, nylon washer, flat washer and lock washer. The bolt length is 1 inch for aluminum.

When two sign clamps are used to mount signs back-to-back, use a 5/16-18 UNC galvanized hex head per ASTM A307 with nut and helical-spring lock washer. The approximate bolt lengths for various post sizes and sign clamp types are given in the table at right. The bolt length may need to be adjusted depending upon field conditions.

Sign clamps may be either the specific size clamp or the universal clamp.

Back-to-Back Signs

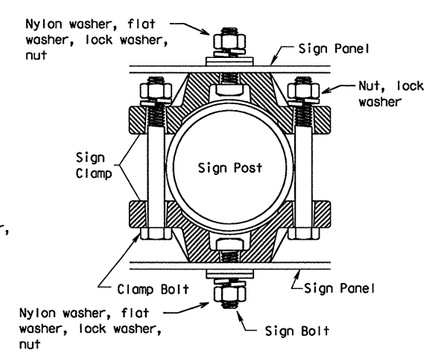

Pipe Diameter	Approximate Bolt Length	
	Specific Clamp	Universal Clamp
2" nominal	3"	3 or 3 1/2"
2 1/2" nominal	3 or 3 1/2"	3 1/2 or 4"
3" nominal	3 1/2 or 4"	4 1/2"

SIGNS WITH PLAQUES

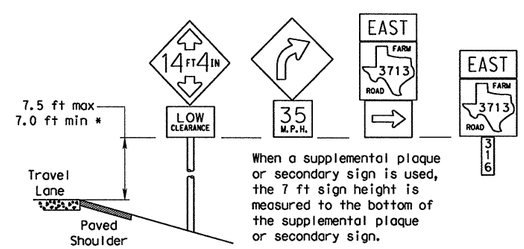

When a supplemental plaque or secondary sign is used, the 7 ft sign height is measured to the bottom of the supplemental plaque or secondary sign.

CURB & GUTTER OR RAISED ISLAND

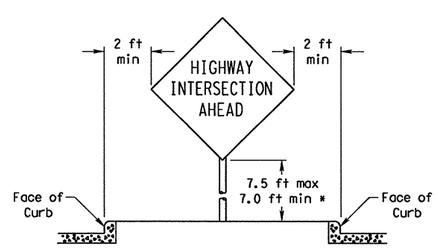

RESTRICTED RIGHT-OF-WAY

(When 6 ft min. is not possible.)

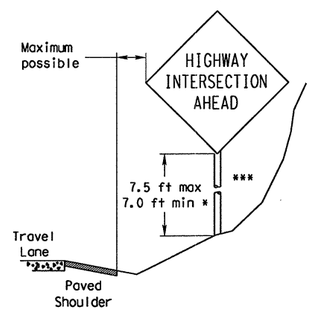

Right-of-way restrictions may be created by rocks, water, vegetation, forest, buildings, a narrow island, or other factors.

In situations where a lateral restriction prevents the minimum horizontal clearance from the edge of the travel lane, signs should be placed as far from the travel lane as practical.

*** Post may be shorter if protected by guardrail or if Engineer determines the post could not be hit due to extreme slope.

Texas Department of Transportation
Traffic Operations Division

SIGN MOUNTING DETAILS SMALL ROADSIDE SIGNS GENERAL NOTES & DETAILS

SMD(GEN)-08

©TxDOT July 2002

REVISIONS	DN: TXDOT	CK: TXDOT	DW: TXDOT	CK: TXDOT
9-08	CONT	SECT	JOB	HIGHWAY
	0091	04	055	SH 289
	DIST		COUNTY	SHEET NO.
	18		COLLIN	429

DATE:
FILE:

26A

R-201104-01

DISCLAIMER: The use of this standard is governed by the "Texas Engineering Practice Act". No warranty of any kind is made by TxDOT for any purpose whatsoever. TxDOT assumes no responsibility for the conversion of this standard to other formats or for incorrect results or damages resulting from its use.

TRIANGULAR SLIPBASE INSTALLATION GENERAL REQUIREMENTS

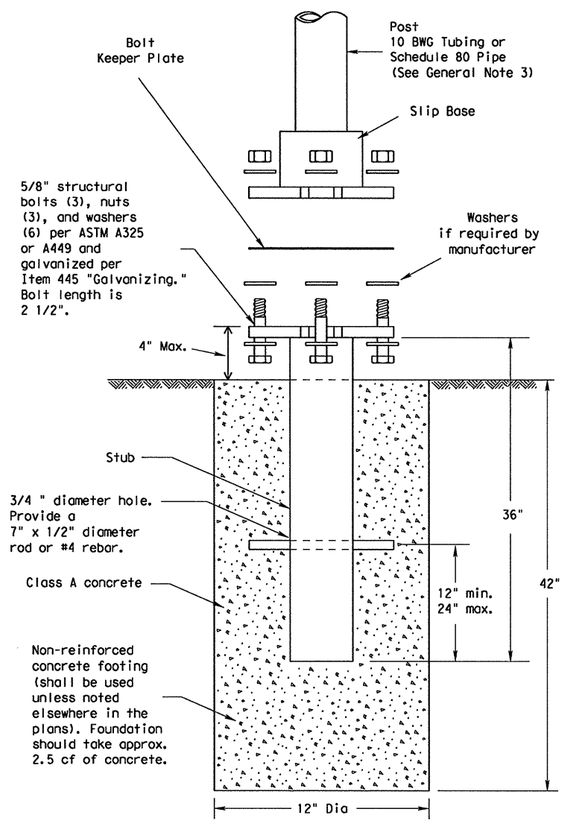

SM RD SGN ASSM TY XXXXX(X)SA(X-XXXX)

NOTE

There are various devices approved for the Triangular Slipbase System. Please reference the Material Producer List for approved slip base systems. http://www.txdot.gov/business/producer_list.htm The devices shall be installed per manufacturers' recommendations. Installation procedures shall be provided to the Engineer by Contractor.

GENERAL NOTES:

1. Slip base shall be permanently marked to indicate manufacturer. Method, design, and location of marking are subject to approval of the TxDOT Traffic Standards Engineer.
2. Material used as post with this system shall conform to the following specifications:
   10 BWG Tubing (2.875" outside diameter)
   - 0.134" nominal wall thickness
   - Seamless or electric-resistance welded steel tubing or pipe
   - Steel shall be HSLAS Gr 55 per ASTM A1011 or ASTM A1008
   - Other steels may be used if they meet the following:
     - 55,000 PSI minimum yield strength
     - 70,000 PSI minimum tensile strength
     - 20% minimum elongation in 2"
   - Wall thickness (uncoated) shall be within the range of 0.122" to 0.138"
   - Outside diameter (uncoated) shall be within the range of 2.867" to 2.883"
   - Galvanization per ASTM A123 or ASTM A653 G210. For precoated steel tubing (ASTM A653), recoat tube outside diameter weld seam by metallizing with zinc wire per ASTM B833.

   Schedule 80 Pipe (2.875" outside diameter)
   - 0.276" nominal wall thickness
   - Steel tubing per ASTM A500 Gr C
   - Other seamless or electric-resistance welded steel tubing or pipe with equivalent outside diameter and wall thickness may be used if they meet the following:
     - 46,000 PSI minimum yield strength
     - 62,000 PSI minimum tensile strength
     - 21% minimum elongation in 2"
   - Wall thickness (uncoated) shall be within the range of 0.248" to 0.304"
   - Outside diameter (uncoated) shall be within the range of 2.855" to 2.895"
   - Galvanization per ASTM A123
3. See the Traffic Operations Division website for detailed drawings of sign clamps and Texas Universal Triangular Slipbase System components. The website address is:
   http://www.txdot.gov/publications/traffic.htm
4. Sign supports shall not be spliced except where shown. Sign support posts shall not be spliced.

ASSEMBLY PROCEDURE

Foundation

1. Prepare 12-inch diameter by 42-inch deep hole. If solid rock is encountered, the depth of the foundation may be reduced such that it is embedded a minimum of 18 inches into the solid rock.
2. The Engineer may permit batches of concrete less than 2 cubic yards to be mixed with a portable, motor-driven concrete mixer. For small placements less than 0.5 cubic yards, hand mixing in a suitable container may be allowed by Engineer. Concrete shall be Class A.
3. Push the pipe end of the slip base stub into the center of the concrete. Rotate the stub back and forth while pushing it down into the concrete to assure good contact between the concrete and stub. Continue to work the stub into the concrete until it is between 2 to 4 inches above the ground.
4. Plumb the stub. Allow a minimum of 4 days to set, unless otherwise directed by the Engineer.
5. The triangular slipbase system is multidirectional and is designed to release when struck from any direction.

Support

1. Cut support so that the bottom of the sign will be 7 to 7.5 feet above the edge of the travelway (i.e., edge of the closest lane) when slip plate is below the edge of pavement or 7 to 7.5 feet above slip plate when the slip plate is above the edge of the travelway. The cut shall be plumb and straight.
2. Attach sign to support using connections shown. When multiple signs are installed on the same support, ensure the minimum clearance between each sign is maintained. See SMD(SLIP-2) for clearances based on sign types.

CONCRETE ANCHOR

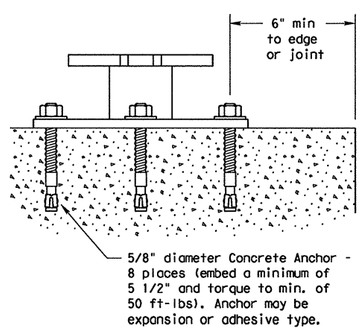

SM RD SGN ASSM TY XXXXX(X)SB(X-XXXX)

Concrete anchor consists of 5/8" diameter stud bolt with UNC series bolt threads on the upper end. Heavy hex nut per ASTM A563, and hardened washer per ASTM F436. The stud bolt shall have a minimum yield and ultimate tensile strength of 50 and 75 KSI, respectively. Nuts, bolts and washers shall be galvanized per Item 445, "Galvanizing." Adhesive type anchors shall have stud bolts installed with Type III epoxy per DMS-6100, "Epoxies and Adhesives." Adhesive anchors may be loaded after adequate epoxy cure time per the manufacturer's recommendations. Top of bolt shall extend at least flush with top of the nut when installed. The anchor, when installed in 4000 psi normal-weight concrete with a 5 1/2" minimum embedment, shall have a minimum allowable tension and shear of 3900 and 3100 psi, respectively.

Texas Department of Transportation
Traffic Operations Division

SIGN MOUNTING DETAILS
SMALL ROADSIDE SIGNS
TRIANGULAR SLIPBASE SYSTEM

SMD(SLIP-1)-08

©TxDOT July 2002

DN: TXDOT	CK: TXDOT	DW: TXDOT	CK: TXDOT
9-08 REVISIONS			

CONT	SECT	JOB	HIGHWAY
0091	04	055	SH 289
DIST		COUNTY	SHEET NO.
18		COLLIN	430

DATE:
FILE:

DISCLAIMER: The use of this standard is governed by the "Texas Engineering Practice Act". No warranty of any kind is made by TxDOT for any purpose whatsoever. TxDOT assumes no responsibility for the conversion of this standard to other formats or for incorrect results or damages resulting from its use.

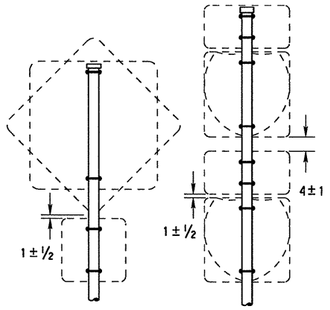

SM RD SGN ASSM TY XXXXX(1)XX(P)

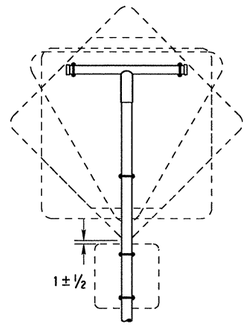

SM RD SGN ASSM TY XXXXX(1)XX(T)

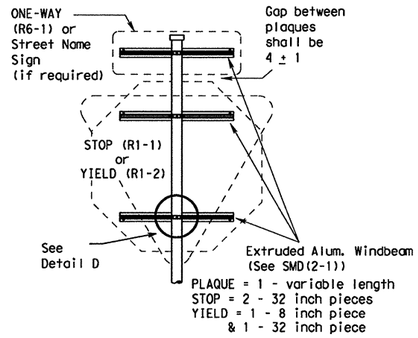

SM RD SGN ASSM TY XXXXX(1)XX(P-BM)

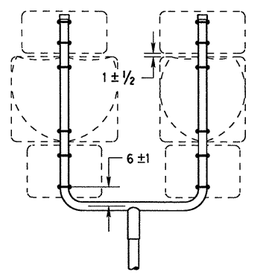

SM RD SGN ASSM TY XXXXX(1)XX(U)

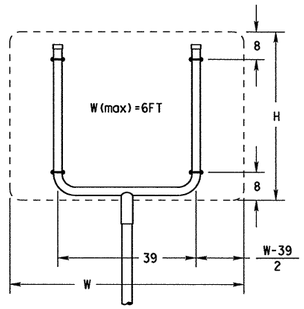

SM RD SGN ASSM TY XXXXX(1)XX(U)

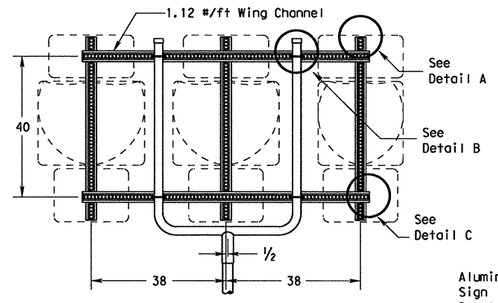

SM RD SGN ASSM TY XXXXX(1)XX(U-WC)
(See Note 11)

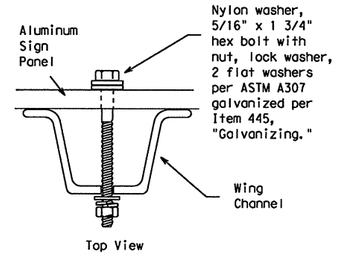

Detail A

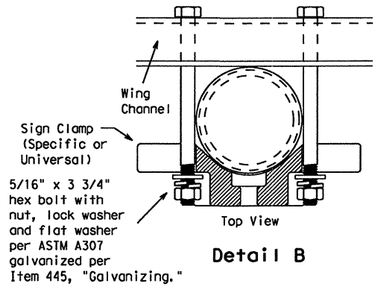

Detail B

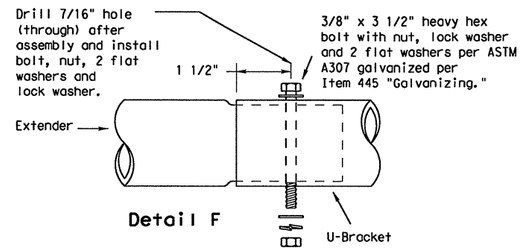

Detail F

Splices shall only be allowed behind the sign substrate.

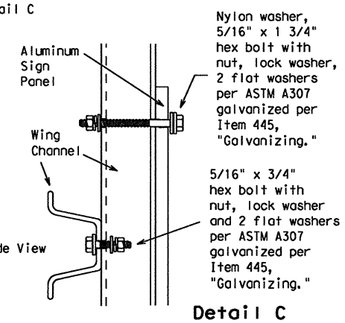

SIDE VIEW

Detail C

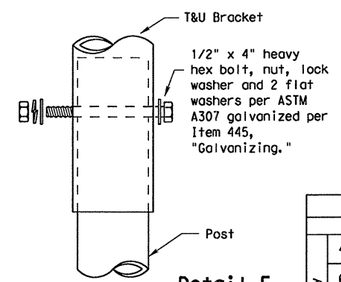

Detail E

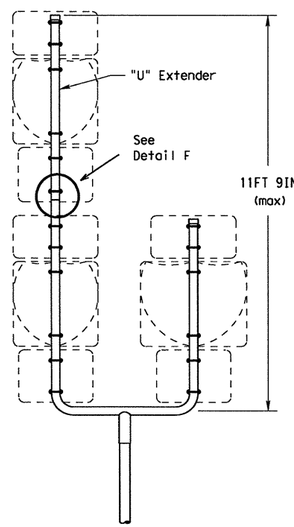

SM RD SGN ASSM TY S80(1)XX(U-1EXT)

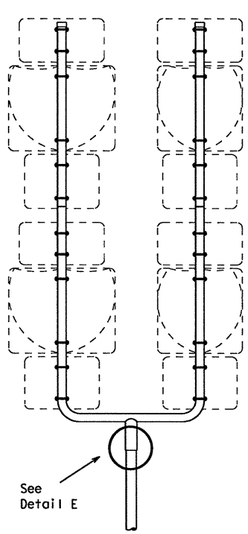

SM RD SGN ASSM TY S80(1)XX(U-2EXT)

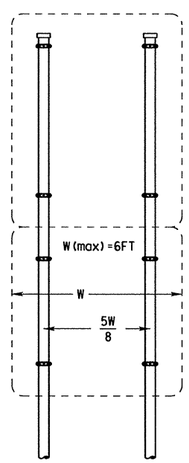

SM RD SGN ASSYM TY XXXXX(2)XX(P)

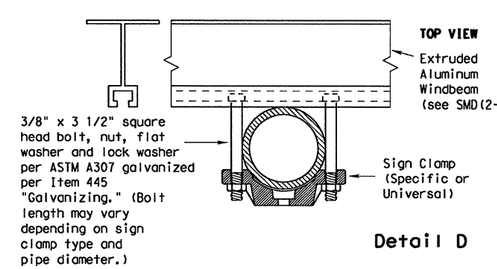

Detail D

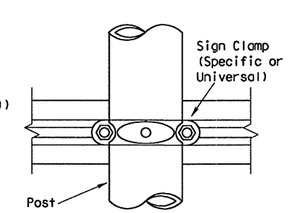

GENERAL NOTES:

1.

SIGN SUPPORT	# OF POSTS	MAX. SIGN AREA
10 BWG	1	16 SF
10 BWG	2	32 SF
Sch 80	1	32 SF
Sch 80	2	64 SF

2. The Engineer may require that a Schedule 80 post be used in place of a 10 BWG where a sign height is abnormally high due to a fill slope.
3. Sign supports shall not be spliced except where shown. Sign support posts shall not be spliced.
4. Aluminum sign blanks shall conform to Departmental Material Specifications DMS-7110 and shall have the following minimum thicknesses: 0.080 for signs less than 7.5 sq. ft., 0.100 for signs 7.5 to 15 sq. ft., and 0.125 for signs greater than 15 sq. ft.
5. Signs that require specific supports due to reasons in addition to windloading are indicated on the "REQUIRED SUPPORT" table on this sheet.
6. For horizontal rectangular signs fabricated from flat aluminum, T-brackets are used for signs 24 inches or less in height. U-brackets are used for signs of greater height.
7. When two triangular slipbase supports are used to support a single sign, they shall not be "rigidly" connected to each other except through the sign panel. This will allow each support to act independently when impacted by an errant vehicle.
8. Wing channel shall meet ASTM A 1011 SS Gr 50 and be galvanized per ASTM A 123.
9. Excess pipe, wing channel, or windbeam shall be cut off so that it does not extend beyond the sign panel (i.e., excess support shall not be visible when the sign is viewed from the front.) Repair galvanized coating at cut support ends per Item 445, "Galvanizing."
10. Additional route markers may be added vertically, provided the total sign area does not exceed the maximum allowable amount per Note 1.
11. Additional sign clamp required on the "T-bracket" post for 24 inch height signs. Place the clamp 3 inches above bottom of sign when possible.
12. Post open ends shall be fitted with Friction Caps.
13. Sign blanks shall be the sizes and shapes shown on the plans.

REQUIRED SUPPORT

	SIGN DESCRIPTION	SUPPORT
Regulatory	48-inch STOP sign (R1-1)	TY 10BWG(1)XX(T) TY 10BWG(1)XX(P-BM)
	60-inch YIELD sign (R1-2)	TY 10BWG(1)XX(T) TY 10BWG(1)XX(P-BM)
	48x16-inch ONE-WAY sign (R6-1)	TY 10BWG(1)XX(T) TY 10BWG(1)XX(P-BM)
	36x48, 48x36, and 48x48-inch signs	TY 10BWG(1)XX(T)
	48x60-inch signs	TY S80(1)XX(T)
Warning	48x48-inch signs (diamond or square)	TY 10BWG(1)XX(T)
	48x60-inch signs	TY S80(1)XX(T)
	48-inch Advance School X-ing sign (S1-1)	TY 10BWG(1)XX(T)
	48-inch School X-ing sign (S2-1)	TY 10BWG(1)XX(T)
	Large Arrow sign (W1-6 & W1-7)	TY 10BWG(1)XX(T)

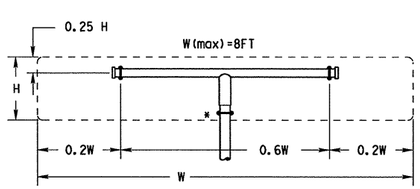

All dimensions are in english unless detailed otherwise.

SM RD SGN ASSM TY XXXXX(1)XX(T)
(* - See Note 12)

FRICTION CAP DETAIL

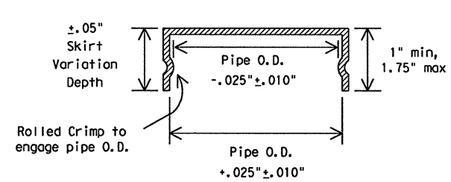

Friction caps may be manufactured from hot rolled or cold rolled steel sheets. The minimum sheet metal thickness shall be 24 gauge for all cap sizes.

The rim edges shall be reasonably straight and smooth. Caps shall be sized and formed in such a manner as to produce a drive-on friction fit and have no tendency to rock when seated on the pipe. The depth shall be sufficient to give positive protection against entrance of rainwater. They shall be free of sharp creases or indentations and show no evidence of metal fracture.

Caps shall have an electrodeposited coating of zinc in accordance with the requirements of ASTM B633 Class FE/ZN 8.

Texas Department of Transportation
Traffic Operations Division

SIGN MOUNTING DETAILS SMALL ROADSIDE SIGNS TRIANGULAR SLIPBASE SYSTEM

SMD(SLIP-2)-08

©TxDOT July 2002

DN: TXDOT	CK: TXDOT	DW: TXDOT	CK: TXDOT
9-08 REVISIONS			

CONT	SECT	JOB	HIGHWAY
0091	04	055	SH 289

DIST	COUNTY	SHEET NO.
18	COLLIN	431

DATE:
FILE:

26C

R-201104-01

DISCLAIMER: The use of this standard is governed by the "Texas Engineering Practice Act". No warranty of any kind is made by TxDOT for any purpose whatsoever. TxDOT assumes no responsibility for the conversion of this standard to other formats or for incorrect results or damages resulting from its use.

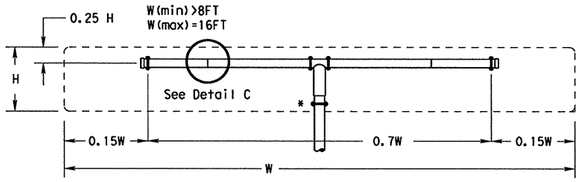

SM RD SGN ASSM TY XXXXX(1)XX(T-2EXT)
(* - See Note 12)

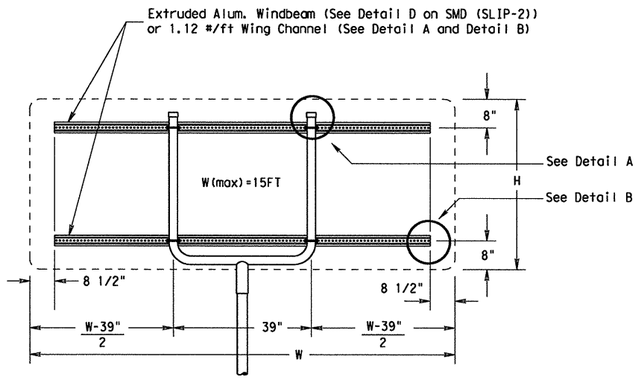

SM RD SGN ASSM TY XXXXX(1)XX(U-XX)

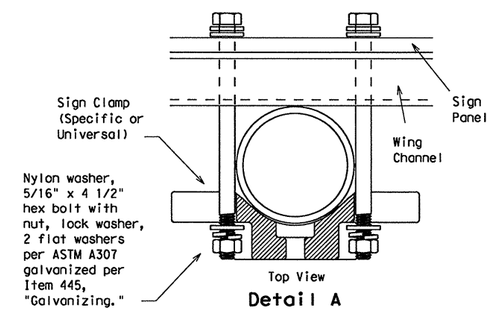

Detail A

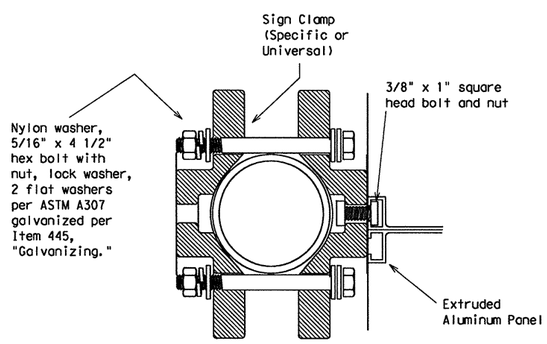

Detail D
EXTRUDED ALUMINUM SIGN WITH T BRACKET

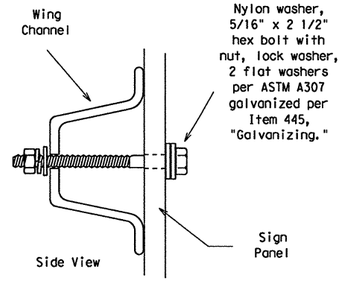

Detail B

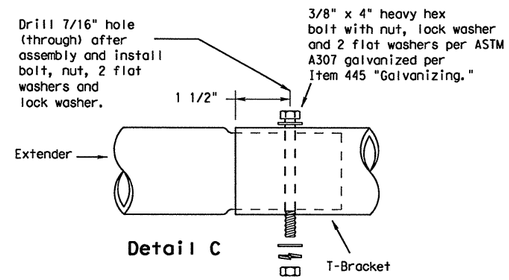

Detail C

Splices shall only be allowed behind the sign substrate.

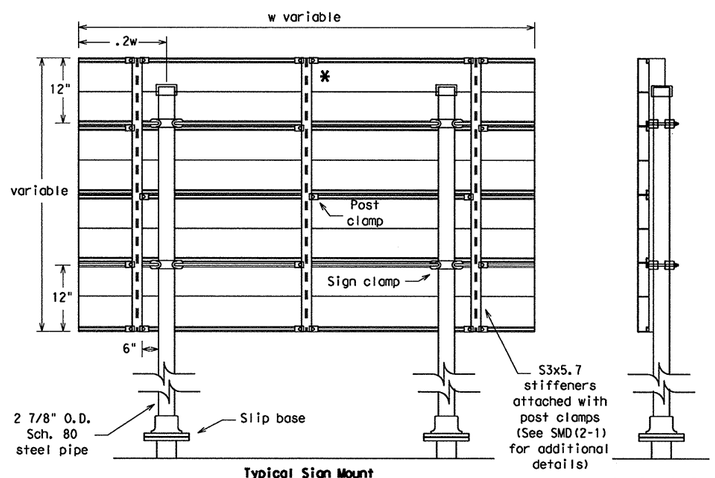

Typical Sign Mount

SM RD SGN ASSM TY S80(2)XX(P-EXAL)

* Additional stiffener placed at approximate center of signs when sign width is greater than 10'.

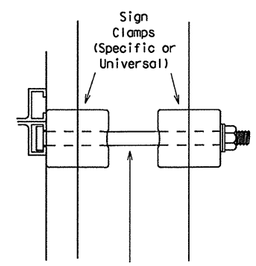

3/8" x 4 1/2"
square head
bolt, nut,
flat washer
and lock washer per
ASTM A307 galvanized
per Item 445,
"Galvanizing."

Detail E

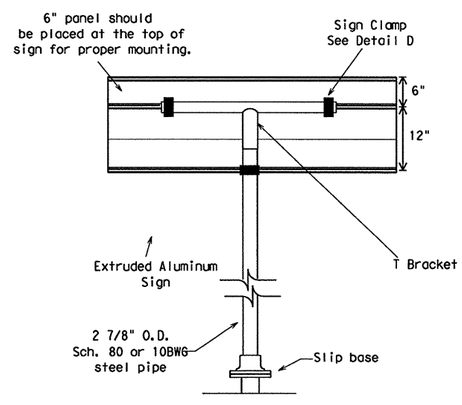

Extruded Aluminum Sign
With T Bracket

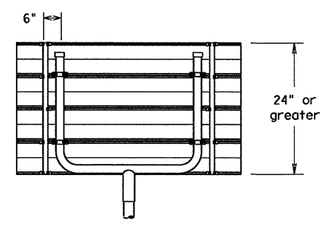

Use Extruded Alum. Windbeam as stiffeners
See SMD (2-1) for additional details

See Detail E
for clamp installation

GENERAL NOTES:

1.

SIGN SUPPORT	# OF POSTS	MAX. SIGN AREA
10 BWG	1	16 SF
10 BWG	2	32 SF
Sch 80	1	32 SF
Sch 80	2	64 SF

2. The Engineer may require that a Schedule 80 post be used in place of a 10 BWG where a sign height is abnormally high due to a fill slope.
3. Sign supports shall not be spliced except where shown. Sign support posts shall not be spliced.
4. Aluminum sign blanks shall conform to Departmental Material Specifications DMS-7110 and shall have the following minimum thicknesses: 0.080 for signs less than 7.5 sq. ft., 0.100 for signs 7.5 to 15 sq. ft., and 0.125 for signs greater than 15 sq. ft.
5. Signs that require specific supports due to reasons in addition to windloading are indicated on the "REQUIRED SUPPORT" table on this sheet.
6. For horizontal rectangular signs fabricated from flat aluminum, T-brackets are used for signs 24 inches or less in height. U-brackets are used for signs of greater height.
7. When two triangular slipbase supports are used to support a single sign, they shall not be "rigidly" connected to each other except through the sign panel. This will allow each support to act independently when impacted by an errant vehicle.
8. Wing channel shall meet ASTM A 1011 SS Gr 50 and be galvanized per ASTM A 123.
9. Excess pipe, wing channel, or windbeam shall be cut off so that it does not extend beyond the sign panel (i.e., excess support shall not be visible when the sign is viewed from the front.) Repair galvanized coating at cut support ends per Item 445, "Galvanizing."
10. Sign blanks shall be the sizes and shapes shown on the plans.
11. Additional sign clamp required on the "T-bracket" post for 24 inch high signs. Place the clamp 3 inches above bottom of sign when possible.
12. Post open ends shall be fitted with Friction Caps.

REQUIRED SUPPORT

	SIGN DESCRIPTION	SUPPORT
Regulatory	48-inch STOP sign (R1-1)	TY 10BWG(1)XX(T) TY 10BWG(1)XX(P-BM)
	60-inch YIELD sign (R1-2)	TY 10BWG(1)XX(T) TY 10BWG(1)XX(P-BM)
	48x16-inch ONE-WAY sign (R6-1)	TY 10BWG(1)XX(T) TY 10BWG(1)XX(P-BM)
	36x48, 48x36, and 48x48-inch signs	TY 10BWG(1)XX(T)
	48x60-inch signs	TY S80(1)XX(T)
Warning	48x48-inch signs (diamond or square)	TY 10BWG(1)XX(T)
	48x60-inch signs	TY S80(1)XX(T)
	48-inch Advance School X-ing sign (S1-1)	TY 10BWG(1)XX(T)
	48-inch School X-ing sign (S2-1)	TY 10BWG(1)XX(T)
	Large Arrow sign (W1-6 & W1-7)	TY 10BWG(1)XX(T)

Texas Department of Transportation
Traffic Operations Division

SIGN MOUNTING DETAILS SMALL ROADSIDE SIGNS TRIANGULAR SLIPBASE SYSTEM

SMD(SLIP-3)-08

©TxDOT July 2002

DN: TXDOT	CK: TXDOT	DW: TXDOT	CK: TXDOT
9-08 REVISIONS			

CONT	SECT	JOB	HIGHWAY
0091	04	055	SH 289

DIST	COUNTY	SHEET NO.
18	COLLIN	432

DATE:
FILE:

260

R-201104-01

DISCLAIMER: The use of this standard is governed by the "Texas Engineering Practice Act". No warranty of any kind is made by TxDOT for any purpose whatsoever. TxDOT assumes no responsibility for the conversion of this standard to other formats or for incorrect results or damages resulting from its use.

REQUIREMENTS FOR E SERIES STANDARD GUIDE SIGNS

TYPICAL EXAMPLES

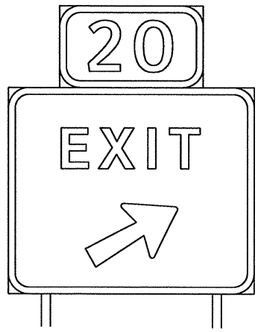

DEPARTMENTAL MATERIAL SPECIFICATIONS

ALUMINUM SIGN BLANKS	DMS-7110
SIGN FACE MATERIALS	DMS-8300
FIBERGLASS SIGN SUBSTRATE	DMS-8305

GROUND-MOUNTED SIGNS

USAGE	COLOR	SIGN FACE MATERIAL
BACKGROUND	ALL	TYPE C SHEETING
LEGEND & BORDERS	WHITE	TYPE D SHEETING

GENERAL NOTES:

1. Signs to be furnished shall be as detailed elsewhere in the plans and/or as shown on sign tabulation sheet. Standard sign designs and arrow dimensions can be found in the "Standard Highway Sign Designs for Texas" (SHSD). Individual panel sizes shown in the plans may be adjusted to fit actual parent sign sizes if necessary.
2. White legend shall use the Clearview Alphabet.
   The following Clearview fonts shall be used to replace the existing white Federal Highway Administration (FHWA) Standard Highway Alphabets, when not specified in the SHSD, or in the plans.
   - B CV-1W
   - C CV-2W
   - D CV-3W
   - E CV-4W
   - Emod CV-5WR
   - F CV-6W
3. Lateral spacing between letters and numerals shall conform with the SHSD, and any approved changes thereto. Lateral spacing of legend shall provide a balanced appearance when spacing is not shown.
4. White legend, symbols and borders shall be cut-out white sheeting applied to colored background sheeting.
5. Information regarding borders and radii for signs is found in the "Standard Highway Sign Designs for Texas". Dimensions shown and described for borders and corner radii on parent sign are nominal. Borders may vary in width as much as 1/2 inch. Corner radii above 3 inches may vary in width as much as 1 inch. Borders and corner radii within a parent sign must be of matching widths. The sign area outside the corner radius need not be trimmed or rounded if fabricated from an extruded material.
6. Sign substrate shall be any material that meets the Departmental Material Specification requirements of DMS-7110, or DMS-8305. Exit Number Panels attached above the parent sign shall be made with the same substrate and sheeting as the parent sign.
7. Mounting details of attachments above and below parent sign are shown in the "SMD series" Standard Plan Sheets. Mounting details of roadside signs are shown in the "SMD series" Standard Plan Sheets.
8. Cut all legend, symbols, and borders at panel joints.

REQUIREMENTS FOR BLUE, BROWN & GREEN D AND I SERIES GUIDE SIGNS

TYPICAL EXAMPLES

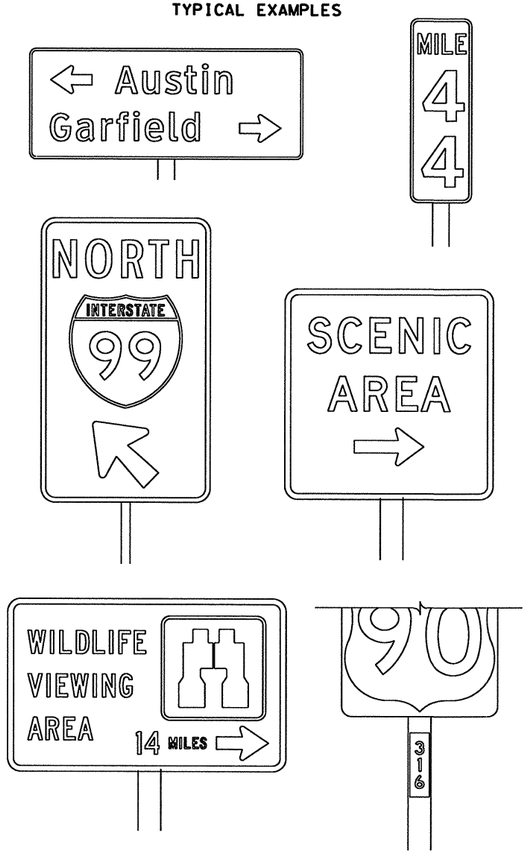

DEPARTMENTAL MATERIAL SPECIFICATIONS

ALUMINUM SIGN BLANKS DMS-7110

Square Ft.	Min. Thickness
Less than 7.5	0.080
7.5 to 15	0.100
Greater than 15	0.125

SIGN FACE MATERIALS	DMS-8300
FIBERGLASS SIGN SUBSTRATE	DMS-8305

GROUND-MOUNTED SIGNS

USAGE	COLOR	SIGN FACE MATERIAL
BACKGROUND	ALL	TYPE C SHEETING
LEGEND & BORDERS	WHITE	TYPE D SHEETING

GENERAL NOTES:

1. Signs to be furnished shall be as detailed elsewhere in the plans and/or as shown on sign tabulation sheet. Standard sign designs and arrow dimensions can be found in the "Standard Highway Sign Designs for Texas" (SHSD).
2. White legend shall use the Clearview Alphabet.
   The following Clearview fonts shall be used to replace the existing white Federal Highway Administration (FHWA) Standard Highway Alphabets, when not specified in the SHSD, or in the plans.
   - B CV-1W
   - C CV-2W
   - D CV-3W
   - E CV-4W
   - Emod CV-5WR
   - F CV-6W
3. Lateral spacing between letters and numerals shall conform with the SHSD, and any approved changes thereto. Lateral spacing of legend shall provide a balanced appearance when spacing is not shown.
4. White legend, symbols and borders shall be cut-out white sheeting applied to colored background sheeting.
5. Information regarding borders and radii for signs is found in the "Standard Highway Sign Designs for Texas". Dimensions shown and described for borders and corner radii on parent sign are nominal. Borders may vary in width as much as 1/2 inch. Corner radii above 3 inches may vary in width as much as 1 inch. Borders and corner radii within a parent sign must be of matching widths. The sign area outside the corner radius should be trimmed or rounded.
6. Sign substrate shall be any material that meets the Departmental Material Specification requirements of DMS-7110 or DMS 8305.
7. Mounting details of roadside signs are shown in the "SMD series" Standard Plan Sheets.

REQUIREMENTS FOR INDEPENDENT MOUNTED ROUTE MARKERS

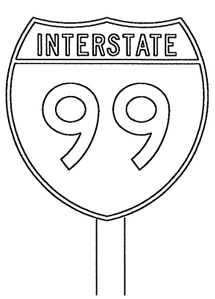

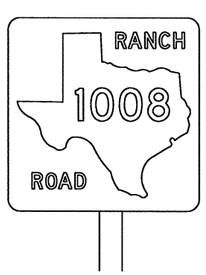

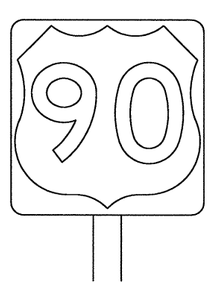

DEPARTMENTAL MATERIAL SPECIFICATIONS

ALUMINUM SIGN BLANKS	DMS-7110
SIGN FACE MATERIALS	DMS-8300

USAGE	COLOR	SIGN FACE MATERIAL
BACKGROUND	ALL	TYPE C SHEETING
LEGEND & BORDERS	WHITE	TYPE C SHEETING
LEGEND & BORDERS	BLACK	ACRYLIC NON-REFLECTIVE FILM

GENERAL NOTES:

1. Signs to be furnished shall be as detailed elsewhere in the plans and/or as shown on sign tabulation sheet. Standard sign designs and arrow dimensions can be found in the "Standard Highway Sign Designs for Texas" (SHSD).
2. Route Marker legend (ie. IH, US, SH and FM shields) shall use the Federal Highway Administration (FHWA) Standard Highway Alphabets (B, C, D, E, Emod or F).
3. Lateral spacing between letters and numerals shall conform with the SHSD, and any approved changes thereto. Lateral spacing of legend shall provide a balanced appearance when spacing is not shown.
4. Black legend and borders shall be applied by screening process or cut-out acrylic non-reflective black film to white background sheeting, or combination thereof.
5. White legend and borders shall be applied by screening process with transparent colored ink, transparent colored overlay film to white background sheeting or cut-out white sheeting to colored background sheeting, or combination thereof.
6. Independent mounted Route Marker sign blanks, for 24 inch markers shall be 0.080 inch thick, and for 36 inch markers shall be 0.100 inch thick one piece sheet aluminum signs(Type A).
7. Mounting details for roadside mounted signs are shown in the "SMD series" Standard Plan Sheets.

The Standard Highway Sign Designs for Texas (SHSD) can be found at the following website.

http://www.txdot.gov/publications/traffic.htm

Texas Department of Transportation
Traffic Operations Division

TYPICAL SIGN REQUIREMENTS

TSR(3)-08

©TxDOT October 2003

REVISIONS
12-03
9-08

DN: TXDOT	CK: TXDOT	DW: TXDOT	CK: TXDOT
CONT	SECT	JOB	HIGHWAY
0091	04	055	SH 289
DIST		COUNTY	SHEET NO.
18		COLLIN	433

DATE:
FILE:

R-201104-01

DISCLAIMER: The use of this standard is governed by the "Texas Engineering Practice Act". No warranty of any kind is made by TxDOT for any purpose whatsoever. TxDOT assumes no responsibility for the conversion of this standard to other formats or for incorrect results or damages resulting from its use.

REQUIREMENTS FOR REGULATORY SIGNS

TYPICAL EXAMPLES

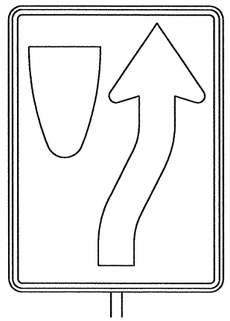

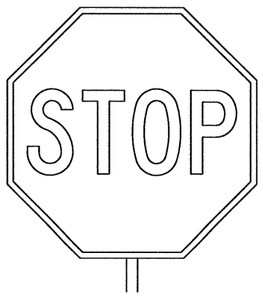

DEPARTMENTAL MATERIAL SPECIFICATIONS

ALUMINUM SIGN BLANKS DMS-7110

Square Ft.	Min. Thickness
Less than 7.5	0.080
7.5 to 15	0.100
Greater than 15	0.125

SIGN FACE MATERIALS DMS-8300

USAGE	COLOR	SIGN FACE MATERIAL
BACKGROUND	ALL	TYPE C SHEETING
LEGEND & BORDERS	WHITE	TYPE C SHEETING
LEGEND & BORDERS	BLACK	ACRYLIC NON-REFLECTIVE FILM

GENERAL NOTES:

1. Signs to be furnished shall be as detailed elsewhere in the plans and/or as shown on sign tabulation sheet. Standard sign designs and arrow dimensions can be found in the "Standard Highway Sign Designs for Texas" (SHSD).
2. Regulatory sign legend shall use the Federal Highway Administration (FHWA) Standard Highway Alphabets (B, C, D, E, Emod or F).
3. Lateral spacing between letters and numerals shall conform with the SHSD, and any approved changes thereto. Lateral spacing of legend shall provide a balanced appearance when spacing is not shown.
4. Black legend and borders shall be applied by screening process or cut-out acrylic non-reflective black film to white background sheeting, or combination thereof.
5. White legend and borders shall be applied by screening process with transparent colored ink, transparent colored overlay film to white background sheeting or cut-out white sheeting to colored background sheeting, or combination thereof.
6. Colored legend shall be applied by screening process with transparent colored ink, transparent colored overlay film or colored sheeting to background sheeting, or combination thereof.
7. Sign substrate shall be any material that meets the Departmental Material Specification requirements of DMS-7110.
8. Mounting details for roadside mounted signs are shown in the "SMD series" Standard Plan Sheets.

REQUIREMENTS FOR SCHOOL SIGNS

TYPICAL EXAMPLES

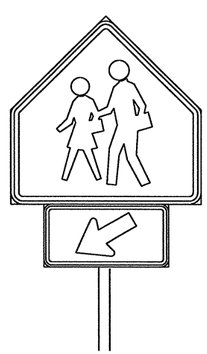

DEPARTMENTAL MATERIAL SPECIFICATIONS

ALUMINUM SIGN BLANKS DMS-7110

Square Ft.	Min. Thickness
Less than 7.5	0.080
7.5 to 15	0.100
Greater than 15	0.125

SIGN FACE MATERIALS DMS-8300

USAGE	COLOR	SIGN FACE MATERIAL
BACKGROUND	WHITE	TYPE C SHEETING
BACKGROUND	FLOR.YEL.GRN.	TYPE E SHEETING
LEGEND & BORDERS	BLACK	ACRYLIC NON-REFLECTIVE FILM

GENERAL NOTES:

1. Signs to be furnished shall be as detailed elsewhere in the plans and/or as shown on sign tabulation sheet. Standard sign designs and arrow dimensions can be found in the "Standard Highway Sign Designs for Texas" (SHSD).
2. School sign legend shall use the Federal Highway Administration (FHWA) Standard Highway Alphabets (B, C, D, E, Emod or F).
3. Lateral spacing between letters and numerals shall conform with the SHSD, and any approved changes thereto. Lateral spacing of legend shall provide a balanced appearance when spacing is not shown.
4. Black legend and borders shall be applied by screening process or cut-out acrylic non-reflective black film to background sheeting, or combination thereof.
5. Sign substrate shall be any material that meets the Departmental Material Specification requirements of DMS-7110.
6. Mounting details for roadside mounted signs are shown in the "SMD series" Standard Plan Sheets.

REQUIREMENTS FOR WARNING SIGNS

TYPICAL EXAMPLES

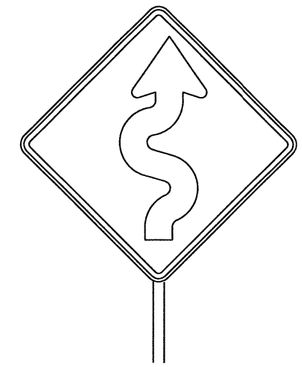

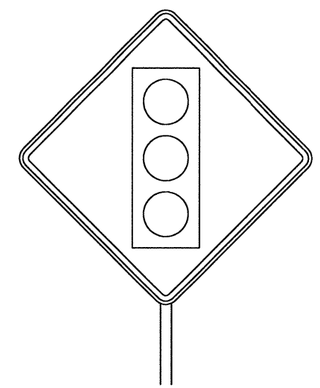

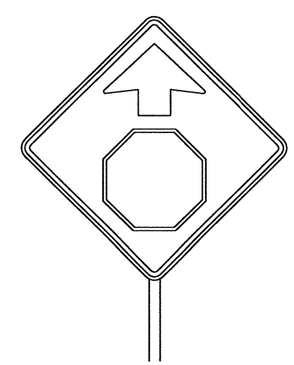

DEPARTMENTAL MATERIAL SPECIFICATIONS

ALUMINUM SIGN BLANKS DMS-7110

Square Ft.	Min. Thickness
Less than 7.5	0.080
7.5 to 15	0.100
Greater than 15	0.125

SIGN FACE MATERIALS DMS-8300

USAGE	COLOR	SIGN FACE MATERIAL
BACKGROUND	YELLOW	TYPE E SHEETING
LEGEND & BORDERS	BLACK	ACRYLIC NON-REFLECTIVE FILM
LEGEND & SYMBOLS	ALL OTHER	TYPE D SHEETING

GENERAL NOTES:

1. Signs to be furnished shall be as detailed elsewhere in the plans and/or as shown on sign tabulation sheet. Standard sign designs and arrow dimensions can be found in the "Standard Highway Sign Designs for Texas" (SHSD).
2. Warning sign legend shall use the Federal Highway Administration (FHWA) Standard Highway Alphabets (B, C, D, E, Emod, or F).
3. Lateral spacing between letters and numerals shall conform with the SHSD, and any approved changes thereto. Lateral spacing of legend shall provide a balanced appearance when spacing is not shown.
4. Black legend and borders shall be applied by screening process or cut-out acrylic non-reflective black film to yellow background sheeting, or combination thereof.
5. Colored legend and symbols shall be applied by screening process with transparent colored ink, transparent colored overlay film, or colored sheeting to white sheeting, or combination thereof. The colored legend or symbol is then applied to the yellow background sheeting.
6. Sign substrate shall be any material that meets the Departmental Material Specification requirements of DMS-7110.
7. Mounting details for roadside mounted signs are shown in the "SMD series" Standard Plan Sheets.

The Standard Highway Sign Designs for Texas (SHSD) can be found at the following website.

http://www.txdot.gov/publications/traffic.htm

Texas Department of Transportation
Traffic Operations Division

TYPICAL SIGN REQUIREMENTS

TSR(4)-08

©TxDOT October 2003

DN: TXDOT	CK: TXDOT	DW: TXDOT	CK: TXDOT

REVISIONS
12-03
9-08

CONT	SECT	JOB	HIGHWAY
0091	04	055	SH 289
DIST		COUNTY	SHEET NO.
18		COLLIN	434

DATE:
FILE:

DISCLAIMER: The use of this standard is governed by the "Texas Engineering Practice Act". No warranty of any kind is made by TxDOT for any purpose whatsoever. TxDOT assumes no responsibility for the conversion of this standard to other formats or for incorrect results or damages resulting from its use.

MOUNTING DETAILS OF ATTACHMENTS TO GUIDE SIGN FACE ("EXIT ONLY" AND "LEFT EXIT" PANELS, ROUTE MARKERS AND OTHER ATTACHMENTS)

DIRECT APPLIED ATTACHMENT

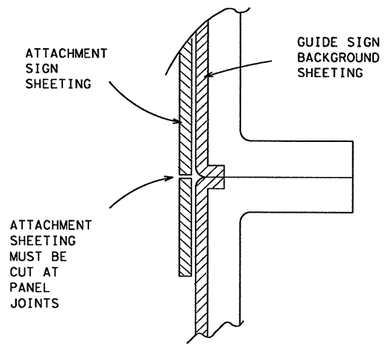

Sheeting for legend, symbols, and borders must be cut at panel joints.

Direct applied attachment signs will be subsidiary to "Aluminum Signs" or "Fiberglass Signs".

SCREW ATTACHMENT

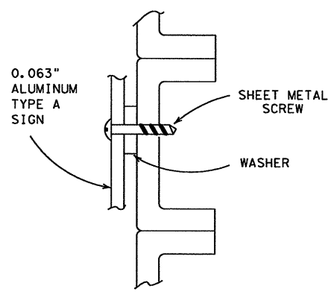

NUT/BOLT ATTACHMENT

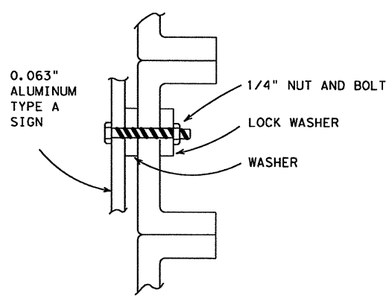

Furnish Type A aluminum sign attachments only when specified in the plans. These signs will be paid for under "Aluminum Signs".

SIGN BLANK PUNCHING DETAILS FOR ATTACHMENTS WHEN SPECIFIED TO BE TYPE A ALUMINUM SIGNS (FOR MOUNTING TO GUIDE SIGN FACE)

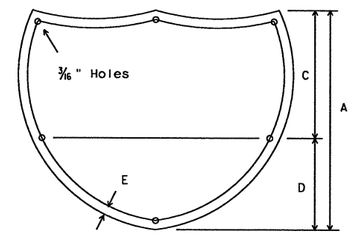

INTERSTATE ROUTE MARKERS

A	C	D	E
36	21	15	1 1/2
48	28	20	1 3/4

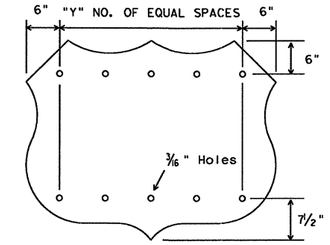

U.S. ROUTE MARKERS

Sign Size	"Y"
24x24	2
30x24	3
36x36	3
45x36	4
48x48	4
60x48	5

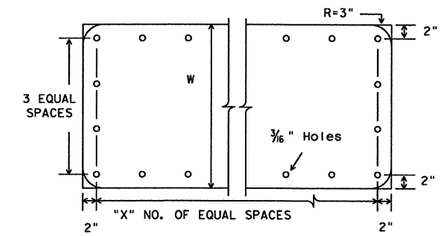

STATE ROUTE MARKERS

No. of Digits	W	X
4	24	4
4	36	5
4	48	6
3	24	3
3	36	4
3	48	5

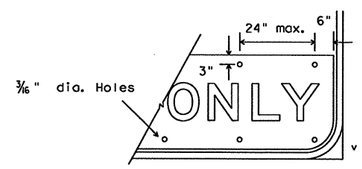

EXIT ONLY PANEL

ARROW DETAILS

for Large Ground-Mounted and Overhead Guide Signs

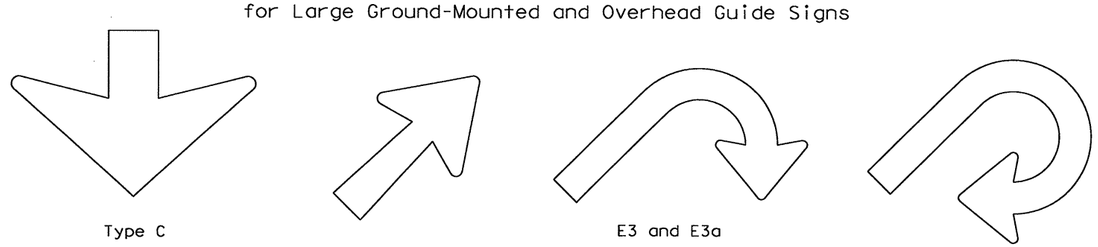

Type C "Down" arrow

E3 and E3a

E4 and E4a

TYPE	LETTER SIZE
A-1	10.67" U/L and 10" Caps
A-2	13.33" U/L and 12" Caps
A-3	16" U/L
B-1	10.67" U/L and 10" Caps
B-2	13.33" U/L and 12" Caps
B-3	16" U/L

CODE	USED ON SIGN NO.
E-3 & E-4	E5-3 and E5-4
E-3a & E-4a	E5-3a and E5-4a

Arrow dimensions are shown in the "Standard Highway Sign Designs for Texas" manual.

The Standard Highway Sign Designs for Texas (SHSD) can be found at the following website.

http://www.txdot.gov/publications/traffic.htm

ARROW DETAILS

for Destination Signs

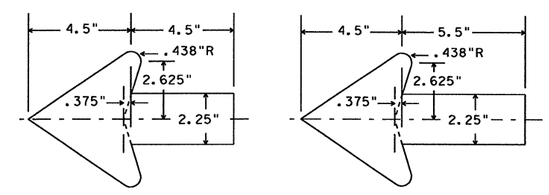

Standard arrow to be used with 6 inch letters.

Standard arrow to be used with 8 inch letters.

Texas Department of Transportation
Traffic Operations Division

TYPICAL SIGN REQUIREMENTS

TSR(5)-08

© TxDOT October 2003

DN: TXDOT	CK: TXDOT	DW: TXDOT	CK: TXDOT

REVISIONS
12-03
9-08

CONT	SECT	JOB	HIGHWAY
0091	04	055	SH 289

DIST	COUNTY	SHEET NO.
18	COLLIN	435

DATE:
FILE:

DISCLAIMER: The use of this standard is governed by the "Texas Engineering Practice Act". No warranty of any kind is made by TxDOT for any purpose whatsoever. TxDOT assumes no responsibility for the conversion of this standard to other formats or for incorrect results or damages resulting from its use.

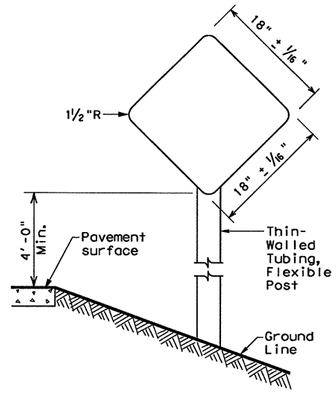

TYPE 1
18" x 18"
Yellow
Type E Sheeting

TYPE 4
18" x 18"
Red
Type D Sheeting

Use Sign blank 0.080" thick sheet aluminum conforming to ASTM B-209 Alloy 6061-T6. Use reflective sheeting in accordance with DMS 8300.

TYPES 1 and 4

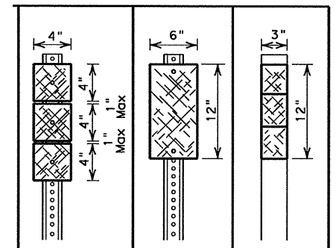

Number of Reflectors	X	Y	Z
Post	WC	WC	FLX

NOTES

1. All type 2 object markers are yellow
2. WC-wing channel post, 1.12 lbs/ft steel per ASTM A 1011 SS Gr 50, or ASTM A499
3. FLX-flexible post (embedded and surface mount)

Typically used on bridge rail approach ends, some bridge abutments and at bridge rail exits on two-lane, two-way roadways

TYPE 2

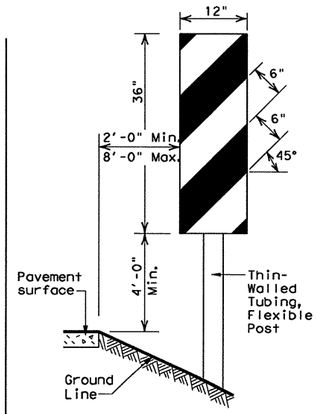

OM-3 Directions

L - Placed on Left Side
R - Placed on Right Side
C - Placed on Center

Use Sign blank .080" thick sheet aluminum conforming to ASTM B-209 Alloy 6061-T6. Use reflective sheeting in accordance with DMS 8300, Type E. Use at bridges with no approach rails.

TYPE 3

OBJECT MARKERS

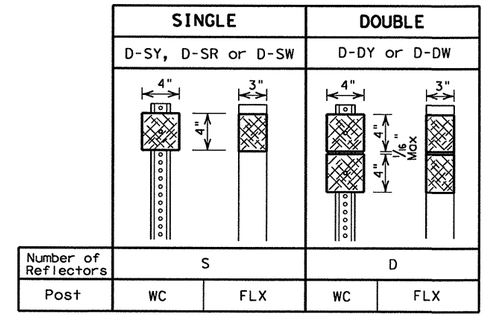

	SINGLE		DOUBLE	
	D-SY, D-SR or D-SW		D-DY or D-DW	
Number of Reflectors	S		D	
Post	WC	FLX	WC	FLX

NOTES

1. Reflector Units: W-White, R-Red, Y-Yellow
2. Length of post may vary to meet field conditions.
3. WC-wing channel post, 1.12 lbs/ft Steel per ASTM A 1011 SS Gr 50, or ASTM A499
4. FLX-flexible post (embedded and surface mount)

DELINEATORS

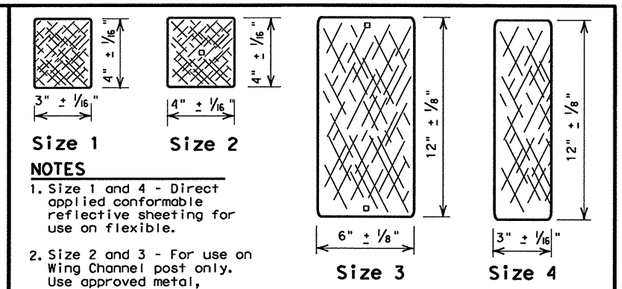

Size 1 Size 2 Size 3 Size 4

NOTES

1. Size 1 and 4 - Direct applied conformable reflective sheeting for use on flexible.
2. Size 2 and 3 - For use on Wing Channel post only. Use approved metal, plastic or fiberglass backplate with 17/64" square mounting holes.
3. Yellow, White & Red: Conformable Reflective Sheeting as per DMS 8300.

REFLECTOR UNIT SIZES

NOTES

1. A reflector unit or sheeting (per DMS 8600) attached to a bracket to facilitate the mounting of the reflector on concrete traffic barrier, railing, metal beam guard fence (MBGF) or other locations shown on the plans. A list of appoved barrier reflectors can be found at: www.txdot.gov
2. Yellow, White and Red: Conformable Reflective Sheeting as per DMS 8300.

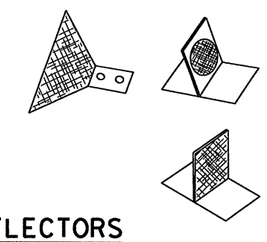

BARRIER REFLECTORS

D & OM DESCRIPTIVE CODES

INSTL DEL ASSM (D-XX) SZ X (XXX) XXX (XX)

NUMBER OF REFLECTORS
S = Single
D = Double

COLOR OF REFLECTORS
W = White
Y = Yellow
R = Red

REFLECTOR UNIT SIZE
1 or 2

TYPE OF POST OR DELINEATOR
WC = Wing Channel Post
FLX = Flexible Post
TYC = Barrier Reflector

TYPE OF MOUNT
GND = Embedded (drivable or set in concrete)
CTB = Concrete Barrier Mount
GF1 or GF2 = Guard Fence Attachment
SRF = Surface Mount

DIRECTION
If Required
BI = Bi-Directional
BR = Bi-Directional with red on back

INSTL OM ASSM (OM-XX) (XXX) XXX (XX)

TYPE OF OBJECT MARKER
1, 2, 3, or 4

NUMBER OF REFLECTORS OR DIRECTION
X = 3-Size 2 reflector units (Type 2 only)
Y = 1-Size 3 reflector unit (Type 2 only)
Z = 3-Size 1 or 1-Size 4 reflector unit(s) (Type 2 only)
L = Left Side (Type 3 Object Marker only)
R = Right Side (Type 3 Object Marker only)
C = Center (Type 3 Object Marker only)

TYPE OF POST
WC = Wing Channel Post
FLX = Flexible Post
TWT = Thin Walled Tubing

TYPE OF MOUNT
GND = Embedded (drivable or set in concrete)
SRF = Surface Mount

DIRECTION
If Required
BI = Bi-Directional

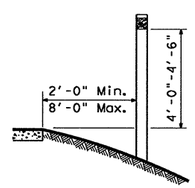

TYPICAL INSTALLATION

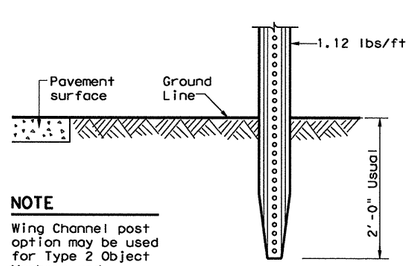

NOTE

Wing Channel post option may be used for Type 2 Object Markers and delineators only.

WING CHANNEL

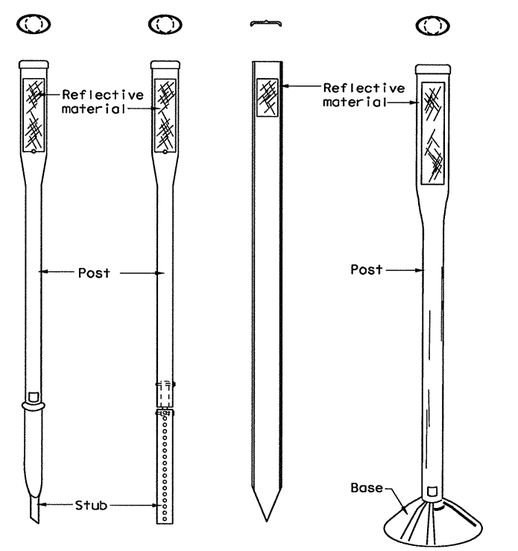

EMBEDDED SURFACE MOUNT

NOTES

1. See Material Producer List for approved devices.
2. Install to manufacturer's recommenations.

FLEXIBLE POSTS

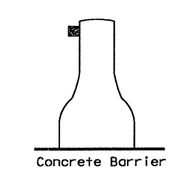

CTB

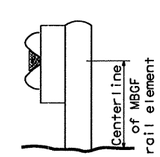

GF1

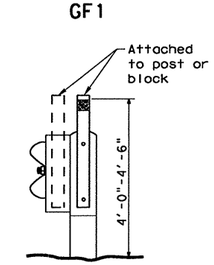

GF2

BARRIER REFLECTORS

GENERAL NOTES

1. Place delineators on a section of roadway the same distance from the edge of pavement.
2. Where a restriction prevents consistent placement from the pavement edge, place the affected object markers in line with the innermost edge of the obstruction.
3. When object markers are more than 8'-0" from the edge of the pavement, it may not be possible to maintain a height of 4'-0"-4'-6". If this is the case, place the object markers as close to the desired height as possible.
4. Install all delineators, object markers and barrier reflectors in accordance with the manufacturer's recommendation.

DEPARTMENTAL MATERIAL SPECIFICATIONS

FLEXIBLE DELINEATOR & OBJECT MARKER POSTS (EMBEDDED & SURFACE MOUNT TYPES)	DMS-4400
SIGN FACE MATERIALS	DMS-8300
DELINEATORS AND OBJECT MARKERS	DMS-8600

Texas Department of Transportation
Traffic Operations Division

DELINEATOR & OBJECT MARKER INSTALLATION AND MATERIAL DESCRIPTION D & OM(1)-10

© TxDOT August 2004

DN: TXDOT	CK: TXDOT	DW: TXDOT	CK: TXDOT

REVISIONS
10-09
4-10

CONT	SECT	JOB	HIGHWAY
0091	04	055	SH 289
DIST		COUNTY	SHEET NO.
18		COLLIN	436

DATE:
FILE:

204

R-201104-01

DISCLAIMER: The use of this standard is governed by the "Texas Engineering Practice Act". No warranty of any kind is made by TxDOT for any purpose whatsoever. TxDOT assumes no responsibility for the conversion of this standard to other formats or for incorrect results or damages resulting from its use.

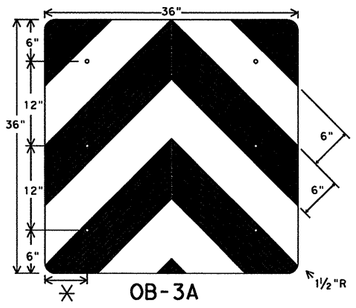

OB-3A

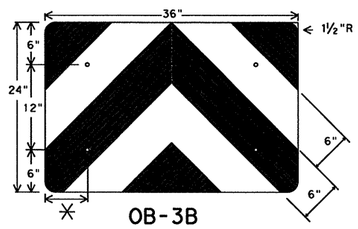

OB-3B

✳ adjust to fit attenuator per manufacturer's recommendation, or as directed by the Engineer.

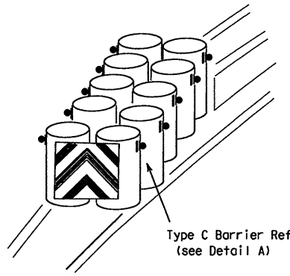

Object Marker blank to be 0.08" thick sheet aluminum conforming to ASTM B-209 Alloy 6061-T6 aluminum as per Specification DMS 7110.

Mounting should be flush with top of VIA. Minimum size 36" x 24".

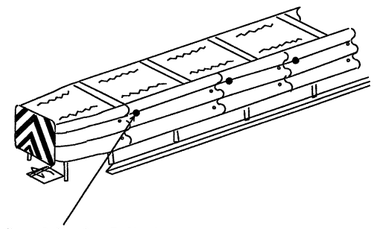

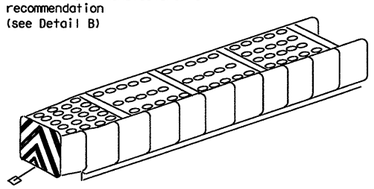

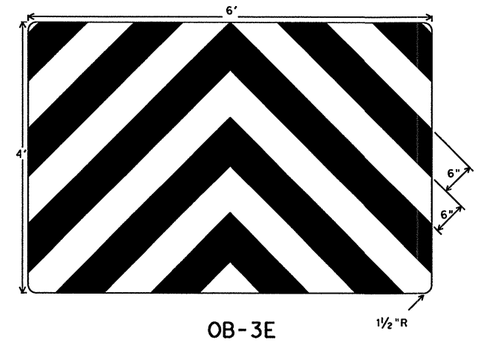

OB-3E

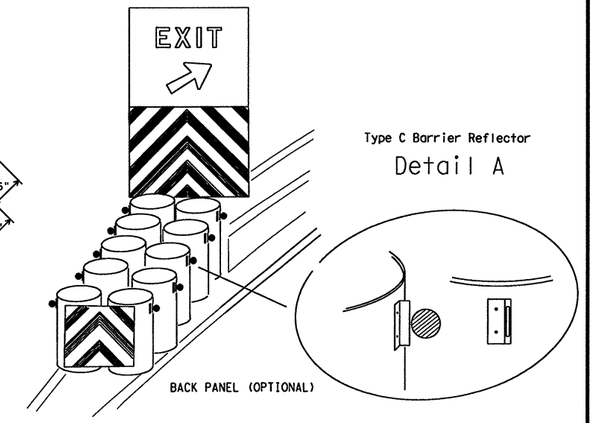

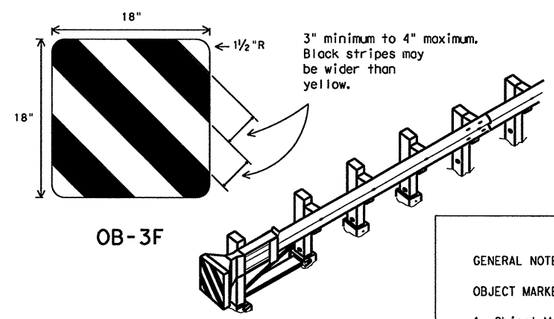

OB-3F

TYPICAL GUARDRAIL
END TREATMENT

GENERAL NOTES:

1. Back panel will be mounted independent of the attenuator. The minimum mounting height is flush with the top of the attenuator.
2. Attenuator may have additional yellow reflective and black striping, and/or reflectors placed on sides. CHEVRONS (W1-8) may be erected to delineate roadway curvature beyond the attenuator. These additional devices will be installed if required elsewhere in the plans.
3. Mount Back Panel per details on SMD Standards, or as detailed elsewhere in the plans.

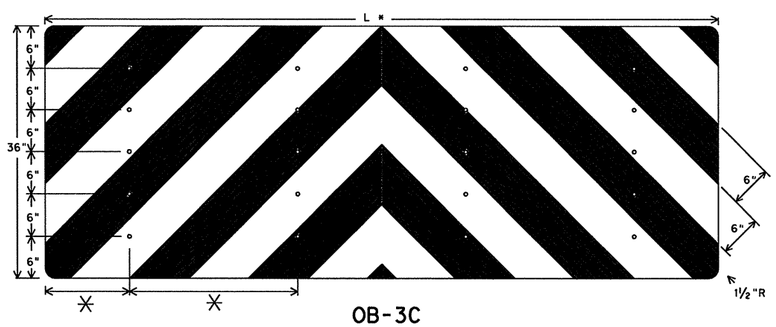

OB-3C

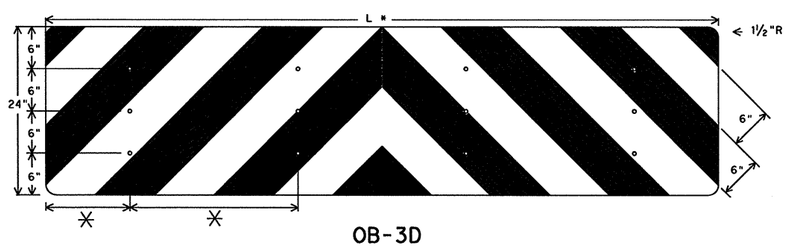

OB-3D

✳ spacing adjusted to attach through centerline of drum, per attenuator manufacturers recommendation, or as directed by the Engineer.

Mounting should be flush with top of attenuator. Minimum size 96" x 24".

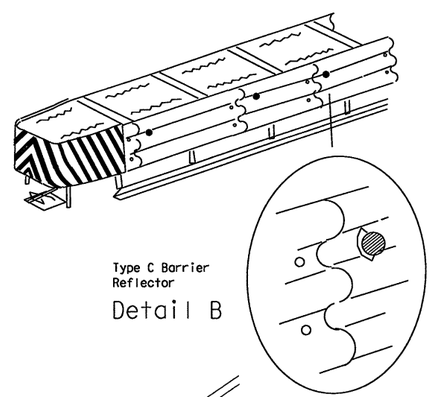

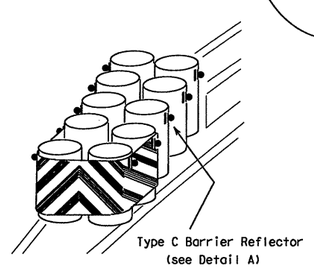

GENERAL NOTES:

OBJECT MARKERS

1. Object Markers shall conform to the Texas MUTCD and meet the color and reflectivity requirement of Department Material Specification DMS 8300, Type C. Background shall be yellow reflective and Chevron shall be black.
2. OB-3F is intended for use only with guardrail terminal ends. OM-BF may be fabricated from adhesive backed reflective sheeting applied directly to guardrail end treatment, or applied directly to an "end cap" as per the manufacturer's recommendation. Direct applied sheeting shall provide a smooth surface and have no wrinkles, air bubbles, cuts or tears.
3. Size may be reduced to fit smaller devices, however, the minimum size shall be:
   (a) 24 x 24 inch for attenuators, and
   (b) 18 x 18 inches for guardrail end treatments.
4. Pop rivets, screws, or nuts and bolts may be used to attach object markers and reflectors. Holes, slots or other openings may be cut or drilled through object markers to allow cable or other attachments.
5. When traffic passes only on one side of attenuator, only the OM-3 marker should be installed. OM-3 should be installed per the requirements of D & OM Standards with a minimum mounting height of 18 inches.

TYPE C REFLECTORS

1. Type C delineators shall consist of a Type A or Type B reflector unit (per DMS 8600) attached to a bracket to facilitate delineator mounting on attenuators, guardrails and concrete traffic barriers.
2. Type C reflectors may also be used to delineate side of attenuator, guardrail and concrete traffic barrier.
3. Type C reflectors shall meet the requirements of DMS 8600.

A list of approved Type C Delineators can be found at:

ftp//ftp.dot.state.tx.us/pub/txdot-info/cmd/mpl/typecdeln.pdf

Texas Department of Transportation
Traffic Operations Division

DELINEATORS & OBJECT MARKERS FOR VEHICLE IMPACT ATTENUATORS

D & OM(VIA)-04

© TxDOT December 1989

DN: TXDOT	CK: TXDOT	DW: TXDOT	CK: TXDOT
CONT	SECT	JOB	HIGHWAY
0091	04	055	SH 289
DIST		COUNTY	SHEET NO.
18		COLLIN	437

REVISIONS
4-92
8-95
4-98
8-04

2 OF 1

DATE:
FILE:

R-201104-01

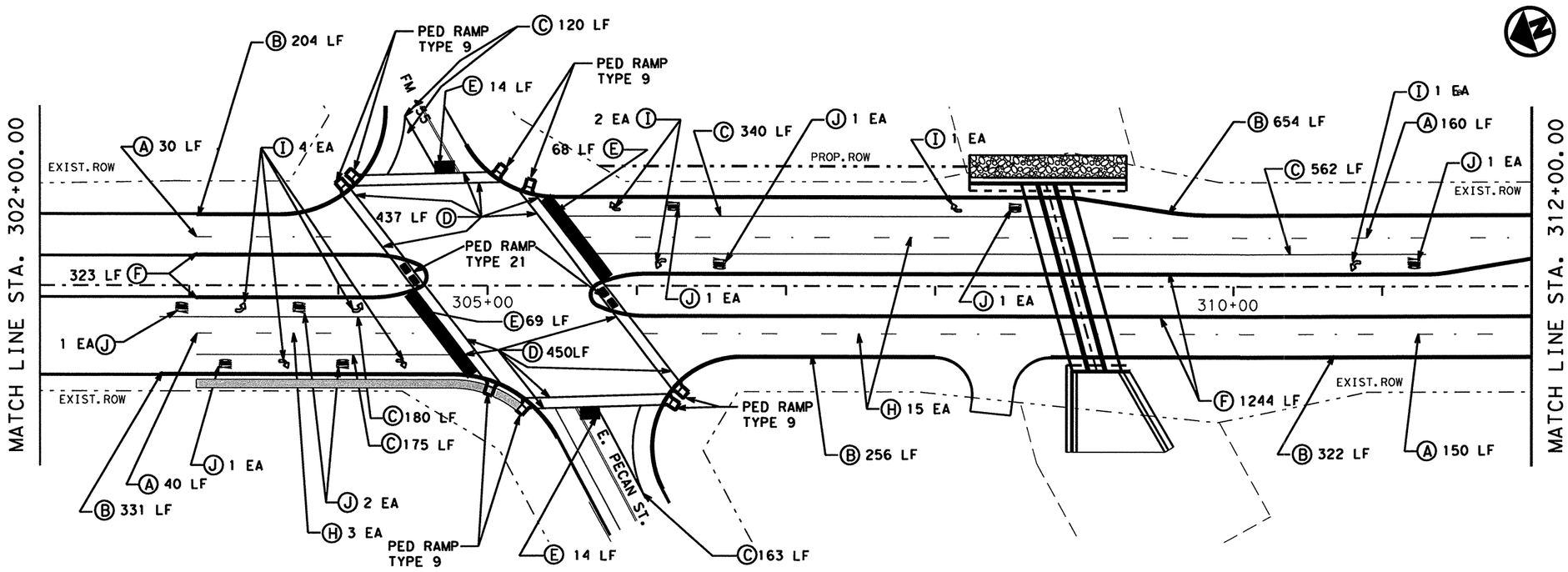

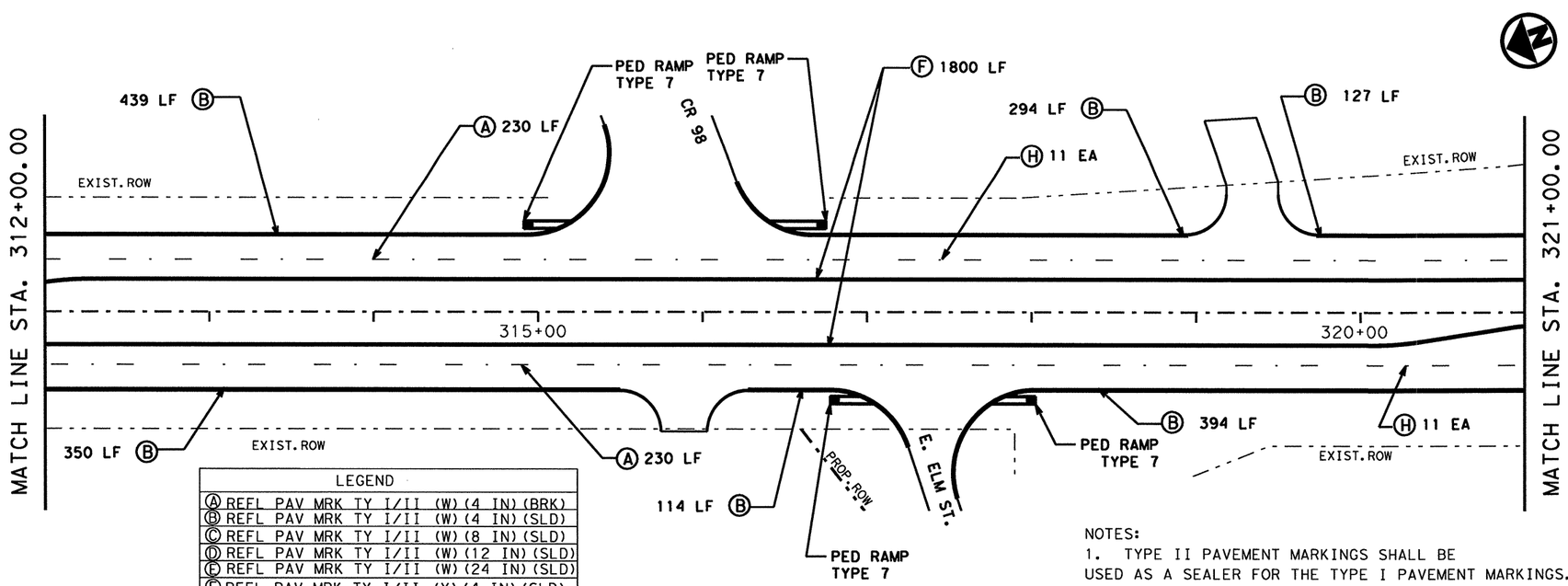

LEGEND
A REFL PAV MRK TY I/II (W)(4 IN)(BRK)
B REFL PAV MRK TY I/II (W)(4 IN)(SLD)
C REFL PAV MRK TY I/II (W)(8 IN)(SLD)
D REFL PAV MRK TY I/II (W)(12 IN)(SLD)
E REFL PAV MRK TY I/II (W)(24 IN)(SLD)
F REFL PAV MRK TY I/II (Y)(4 IN)(SLD)
H RAIS PAV MRKR CL B (REFL) TY II-C-R
I PREFAB PAV MRK TY A (W) (ARROW)
J PREFAB PAV MRK TY A (W) (WORD)

NOTES:

1. TYPE II PAVEMENT MARKINGS SHALL BE USED AS A SEALER FOR THE TYPE I PAVEMENT MARKINGS.

2. FINAL PAVEMENT MARKINGS SHALL MATCH THE LIMITS OF EXISTING PAVEMENT MARKINGS.

STATE OF TEXAS
MAHER F. KARAM
107452
LICENSED
PROFESSIONAL ENGINEER

Signature of Registrant & Date, P.E. 4/7/11

Texas Department of Transportation
© 2011

SH 289
PAVEMENT MARKINGS
STA 302+00 TO STA 321+00

SCALE: 1" = 80' SHEET 1 OF 12

DESIGN	FED. RD. DIV. NO.	STATE PROJECT NO.		HIGHWAY NO.
MK	6	SEE TITLE SHEET		SH 289
GRAPHICS MK	STATE	DISTRICT	COUNTY	SHEET NO.
CHECK NVS	TEXAS	18	COLLIN	438
CHECK NVS	CONTROL	SECTION	JOB	
	0091	04	055	

R-201104-01

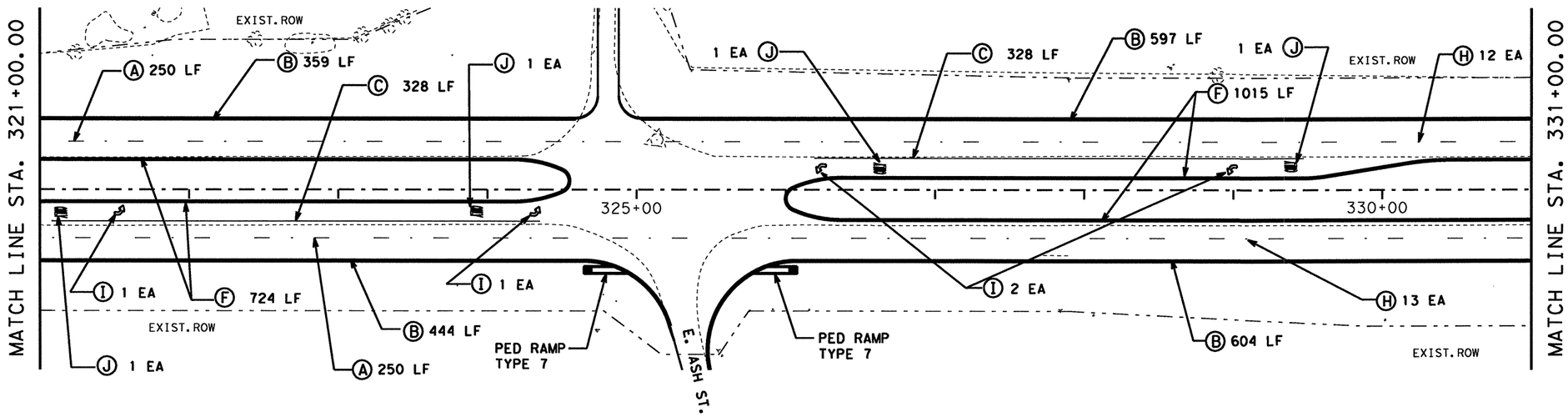

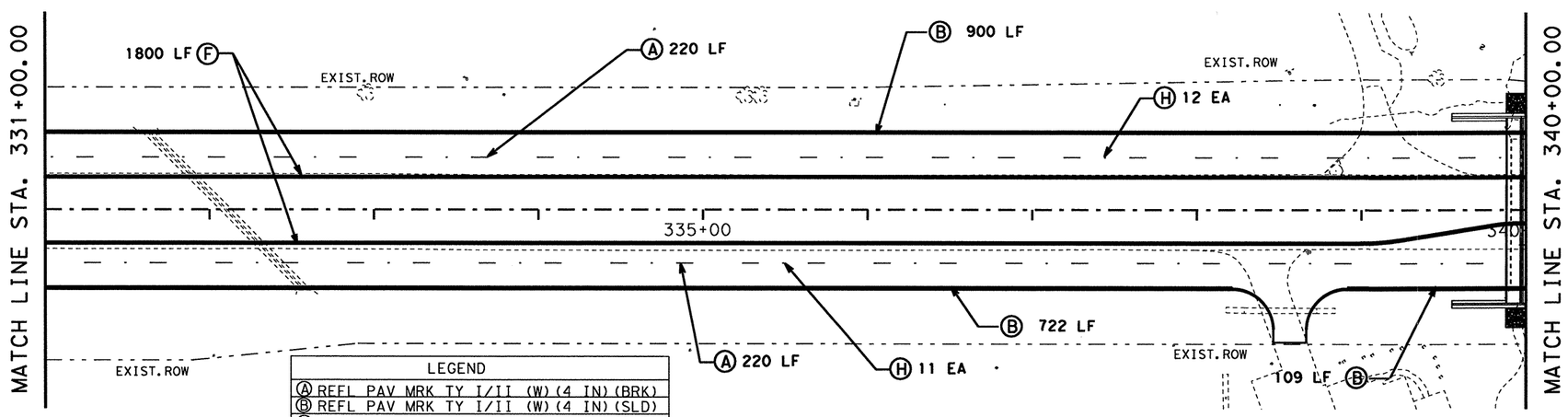

LEGEND
Ⓐ REFL PAV MRK TY I/II (W)(4 IN)(BRK)
Ⓑ REFL PAV MRK TY I/II (W)(4 IN)(SLD)
Ⓒ REFL PAV MRK TY I/II (W)(8 IN)(SLD)
Ⓓ REFL PAV MRK TY I/II (W)(12 IN)(SLD)
Ⓔ REFL PAV MRK TY I/II (W)(24 IN)(SLD)
Ⓕ REFL PAV MRK TY I/II (Y)(4 IN)(SLD)
Ⓗ RAIS PAV MRKR CL B (REFL) TY II-C-R
Ⓘ PREFAB PAV MRK TY A (W) (ARROW)
Ⓙ PREFAB PAV MRK TY A (W) (WORD)

NOTES:

1. TYPE II PAVEMENT MARKINGS SHALL BE USED AS A SEALER FOR THE TYPE I PAVEMENT MARKINGS.

2. FINAL PAVEMENT MARKINGS SHALL MATCH THE LIMITS OF EXISTING PAVEMENT MARKINGS.

STATE OF TEXAS
MAHER F. KARAM
107452
LICENSED PROFESSIONAL ENGINEER

Signature of Registrant & Date, P.E. 4/7/11

Texas Department of Transportation
© 2011

SH 289
PAVEMENT MARKINGS
STA 321+00 TO STA 340+00

SCALE: 1"= 80' SHEET 2 OF 12

DESIGN	FED. RD. DIV. NO.	STATE PROJECT NO.		HIGHWAY NO.
MK	6	SEE TITLE SHEET		SH 289
GRAPHICS MK	STATE	DISTRICT	COUNTY	SHEET NO.
CHECK NVS	TEXAS	18	COLLIN	439
CHECK NVS	CONTROL	SECTION	JOB	
	0091	04	055	

R-201104-01

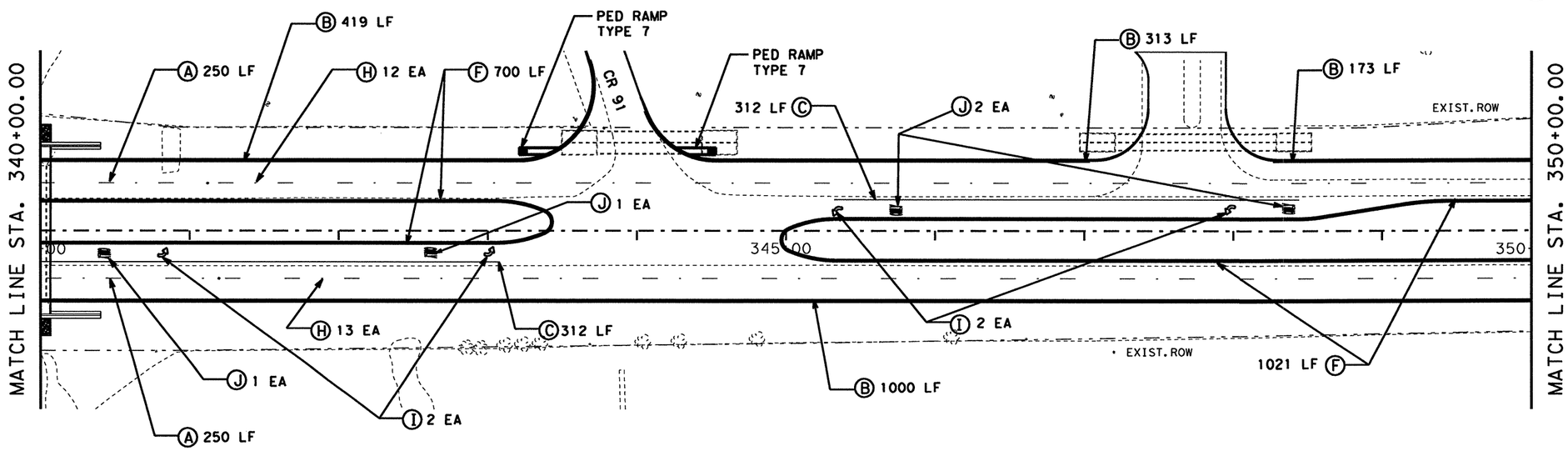

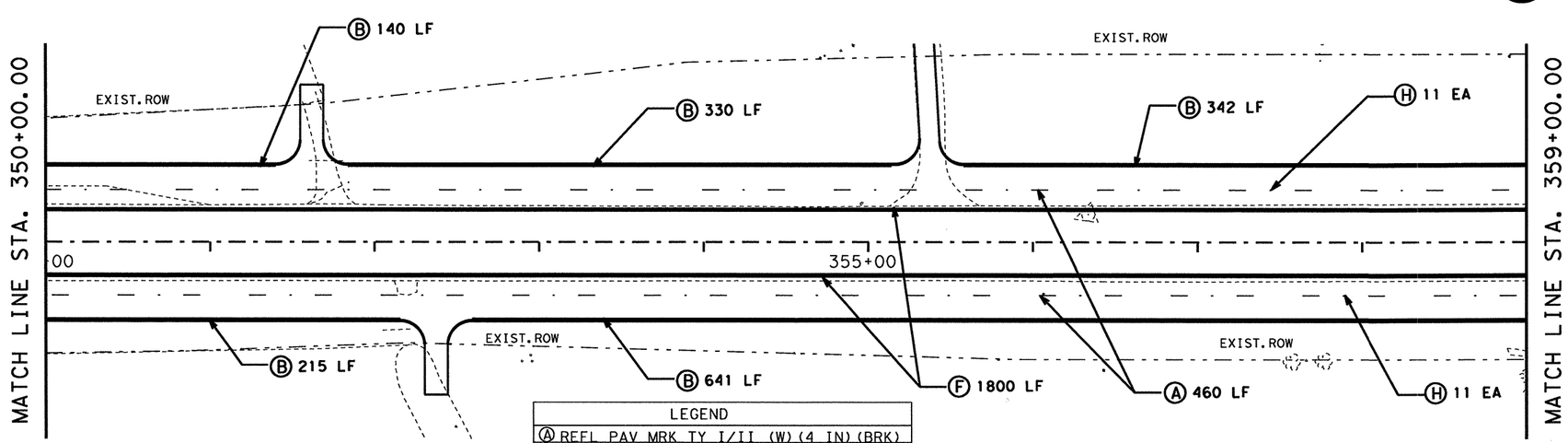

LEGEND
Ⓐ REFL PAV MRK TY I/II (W)(4 IN)(BRK)
Ⓑ REFL PAV MRK TY I/II (W)(4 IN)(SLD)
Ⓒ REFL PAV MRK TY I/II (W)(8 IN)(SLD)
Ⓓ REFL PAV MRK TY I/II (W)(12 IN)(SLD)
Ⓔ REFL PAV MRK TY I/II (W)(24 IN)(SLD)
Ⓕ REFL PAV MRK TY I/II (Y)(4 IN)(SLD)
Ⓗ RAIS PAV MRKR CL B (REFL) TY II-C-R
Ⓘ PREFAB PAV MRK TY A (W) (ARROW)
Ⓙ PREFAB PAV MRK TY A (W) (WORD)

NOTES:

1. TYPE II PAVEMENT MARKINGS SHALL BE USED AS A SEALER FOR THE TYPE I PAVEMENT MARKINGS.

2. FINAL PAVEMENT MARKINGS SHALL MATCH THE LIMITS OF EXISTING PAVEMENT MARKINGS.

STATE OF TEXAS
MAHER F. KARAM
107452
LICENSED
PROFESSIONAL ENGINEER

Signature of Registrant , P.E. & Date 4/7/11

Texas Department of Transportation
© 2011

SH 289
PAVEMENT MARKINGS
STA 340+00 TO STA 359+00

SCALE: 1"= 80' SHEET 3 OF 12

DESIGN	FED. RD. DIV. NO.	STATE PROJECT NO.		HIGHWAY NO.
MK	6			SH 289
GRAPHICS	STATE	DISTRICT	COUNTY	SHEET NO.
MK	TEXAS	18	COLLIN	440
CHECK NVS	CONTROL	SECTION	JOB	
CHECK NVS	0091	04	055	

R-201104-01

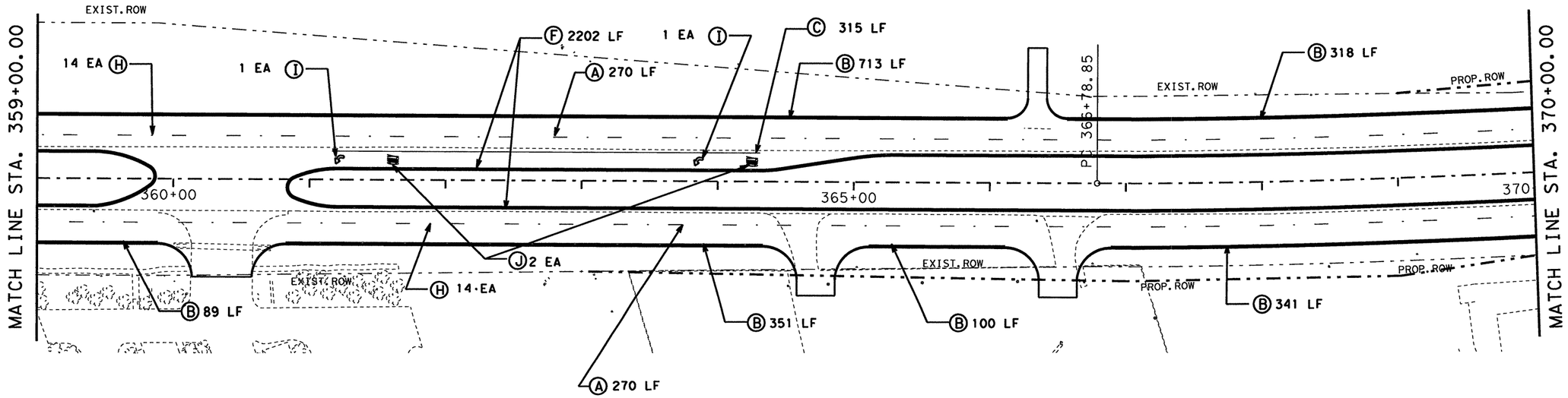

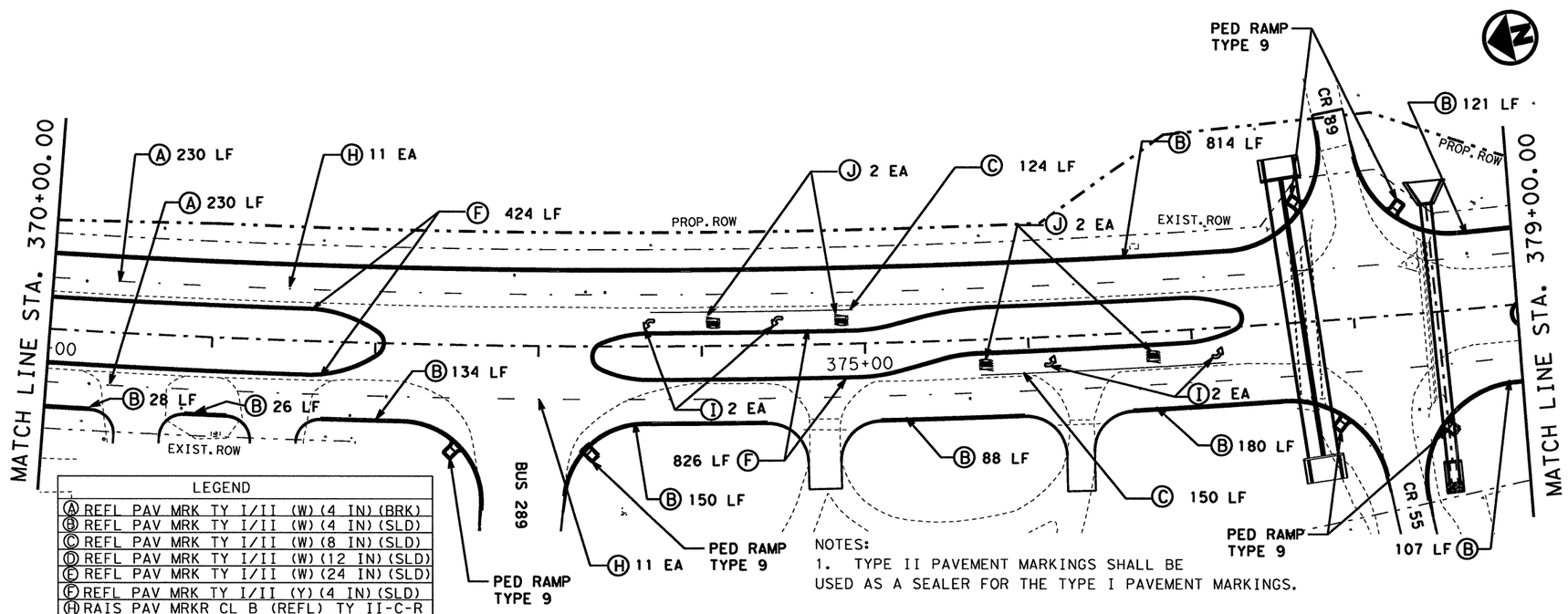

LEGEND
(A) REFL PAV MRK TY I/II (W)(4 IN)(BRK)
(B) REFL PAV MRK TY I/II (W)(4 IN)(SLD)
(C) REFL PAV MRK TY I/II (W)(8 IN)(SLD)
(D) REFL PAV MRK TY I/II (W)(12 IN)(SLD)
(E) REFL PAV MRK TY I/II (W)(24 IN)(SLD)
(F) REFL PAV MRK TY I/II (Y)(4 IN)(SLD)
(H) RAIS PAV MRKR CL B (REFL) TY II-C-R
(I) PREFAB PAV MRK TY A (W) (ARROW)
(J) PREFAB PAV MRK TY A (W) (WORD)

NOTES:

1. TYPE II PAVEMENT MARKINGS SHALL BE USED AS A SEALER FOR THE TYPE I PAVEMENT MARKINGS.

2. FINAL PAVEMENT MARKINGS SHALL MATCH THE LIMITS OF EXISTING PAVEMENT MARKINGS.

STATE OF TEXAS
MAHER F. KARAM
107452
LICENSED PROFESSIONAL ENGINEER

Signature of Registrant & Date, P.E. 4/7/11

Texas Department of Transportation
© 2011

SH 289
PAVEMENT MARKINGS
STA 359+00 TO STA 379+00

SCALE: 1"= 80' SHEET 4 OF 12

DESIGN	FED. RD. DIV. NO.	STATE PROJECT NO.		HIGHWAY NO.
MK	6	SEE TITLE SHEET		SH 289
GRAPHICS MK	STATE	DISTRICT	COUNTY	SHEET NO.
CHECK NVS	TEXAS	18	COLLIN	441
CHECK NVS	CONTROL	SECTION	JOB	
	0091	04	055	

R-201104-01

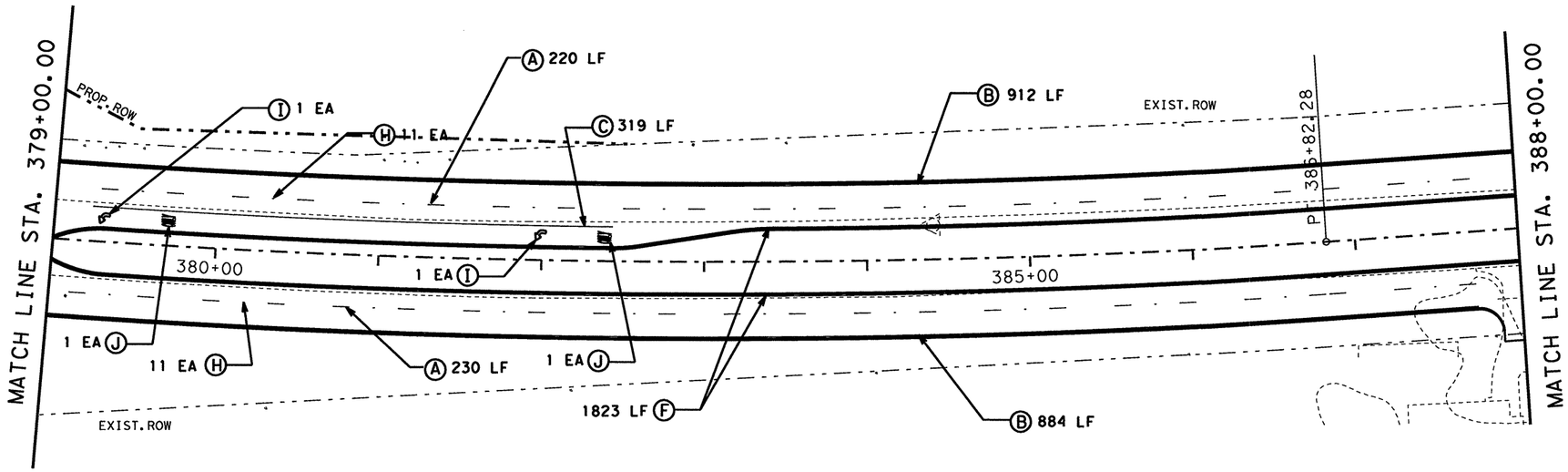

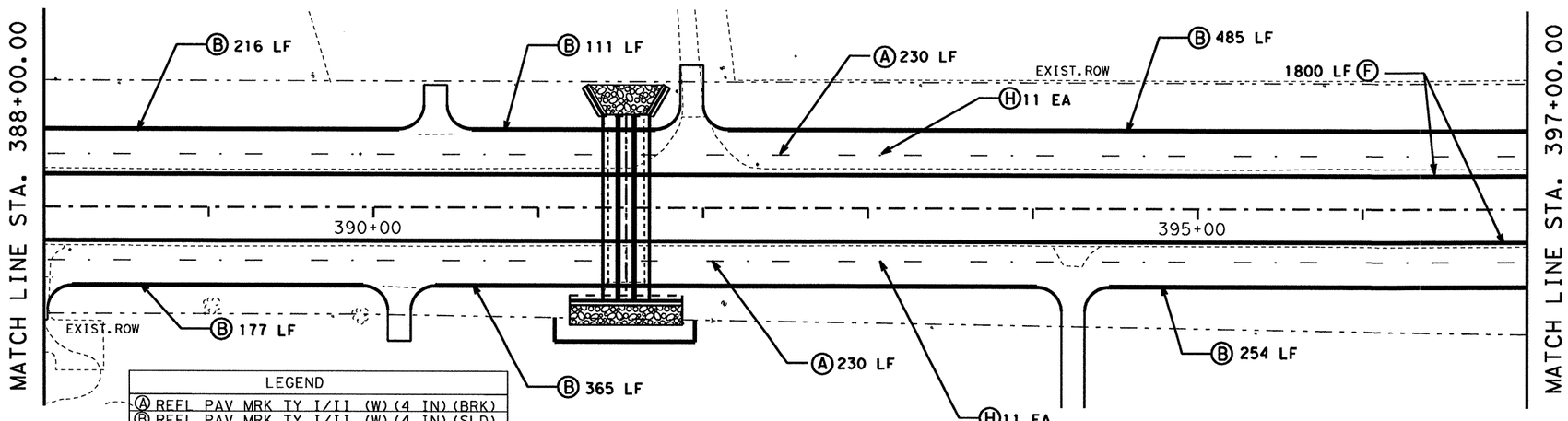

LEGEND
Ⓐ REFL PAV MRK TY I/II (W)(4 IN)(BRK)
Ⓑ REFL PAV MRK TY I/II (W)(4 IN)(SLD)
Ⓒ REFL PAV MRK TY I/II (W)(8 IN)(SLD)
Ⓓ REFL PAV MRK TY I/II (W)(12 IN)(SLD)
Ⓔ REFL PAV MRK TY I/II (W)(24 IN)(SLD)
Ⓕ REFL PAV MRK TY I/II (Y)(4 IN)(SLD)
Ⓗ RAIS PAV MRKR CL B (REFL) TY II-C-R
Ⓘ PREFAB PAV MRK TY A (W) (ARROW)
Ⓙ PREFAB PAV MRK TY A (W) (WORD)

NOTES:

1. TYPE II PAVEMENT MARKINGS SHALL BE USED AS A SEALER FOR THE TYPE I PAVEMENT MARKINGS.

2. FINAL PAVEMENT MARKINGS SHALL MATCH THE LIMITS OF EXISTING PAVEMENT MARKINGS.

STATE OF TEXAS
MAHER F. KARAM
107452
LICENSED
PROFESSIONAL ENGINEER

Signature of Registrant & Date, P.E. 4/7/11

Texas Department of Transportation
© 2011

SH 289
PAVEMENT MARKINGS
STA 379+00 TO STA 397+00

SCALE: 1"= 80'

SHEET 5 OF 12

DESIGN	FED. RD. DIV. NO.	STATE PROJECT NO.		HIGHWAY NO.
MK	6	SEE TITLE SHEET		SH 289
GRAPHICS MK	STATE	DISTRICT	COUNTY	SHEET NO.
CHECK NVS	TEXAS	18	COLLIN	442
CHECK NVS	CONTROL	SECTION	JOB	
	0091	04	055	

R-201104-01

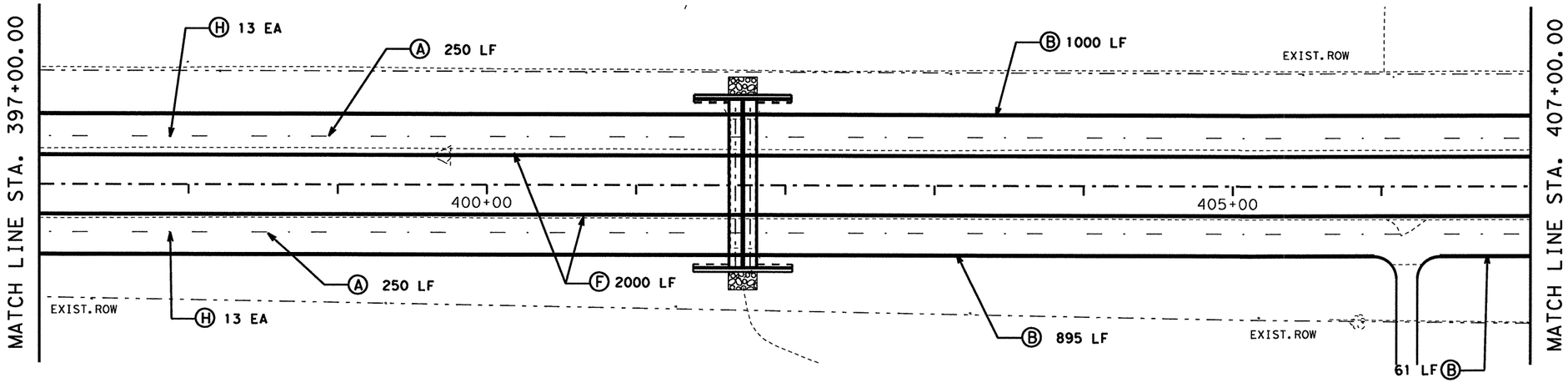

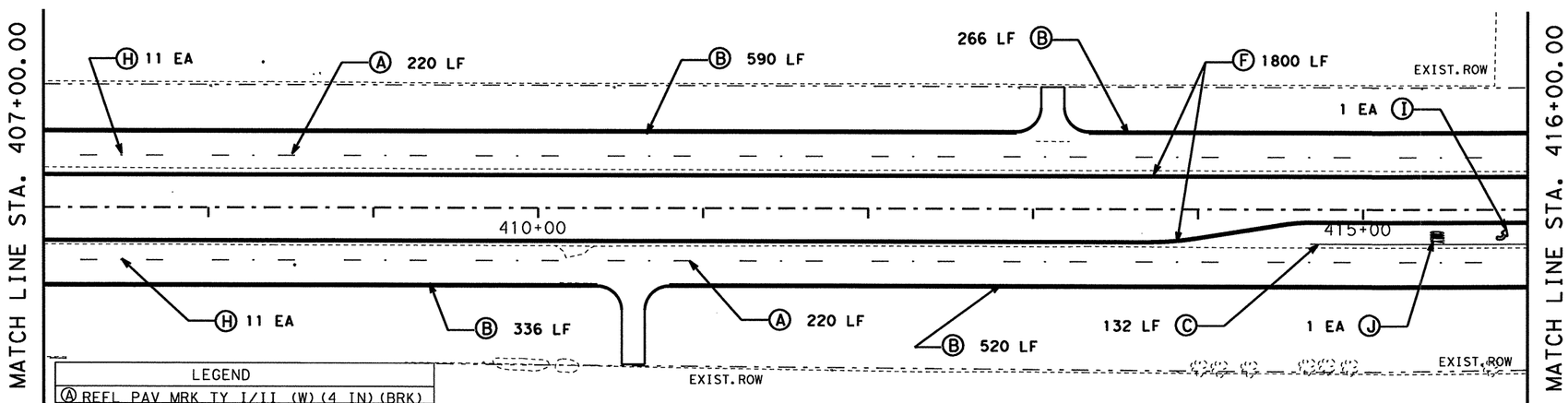

LEGEND
A REFL PAV MRK TY I/II (W)(4 IN)(BRK)
B REFL PAV MRK TY I/II (W)(4 IN)(SLD)
C REFL PAV MRK TY I/II (W)(8 IN)(SLD)
D REFL PAV MRK TY I/II (W)(12 IN)(SLD)
E REFL PAV MRK TY I/II (W)(24 IN)(SLD)
F REFL PAV MRK TY I/II (Y)(4 IN)(SLD)
H RAIS PAV MRKR CL B (REFL) TY II-C-R
I PREFAB PAV MRK TY A (W) (ARROW)
J PREFAB PAV MRK TY A (W) (WORD)

NOTES:

1. TYPE II PAVEMENT MARKINGS SHALL BE USED AS A SEALER FOR THE TYPE I PAVEMENT MARKINGS.

2. FINAL PAVEMENT MARKINGS SHALL MATCH THE LIMITS OF EXISTING PAVEMENT MARKINGS.

STATE OF TEXAS
MAHER F. KARAM
107452
LICENSED PROFESSIONAL ENGINEER

Signature of Registrant, P.E. & Date 4/7/11

Texas Department of Transportation
© 2011

SH 289
PAVEMENT MARKINGS
STA 397+00 TO STA 416+00

SCALE: 1"= 80' SHEET 6 OF 12

DESIGN	FED. RD. DIV. NO.	STATE PROJECT NO.		HIGHWAY NO.
MK	6	SEE TITLE SHEET		SH 289
GRAPHICS MK	STATE	DISTRICT	COUNTY	SHEET NO.
CHECK NVS	TEXAS	18	COLLIN	443
CHECK NVS	CONTROL	SECTION	JOB	
	0091	04	055	

R-201104-01

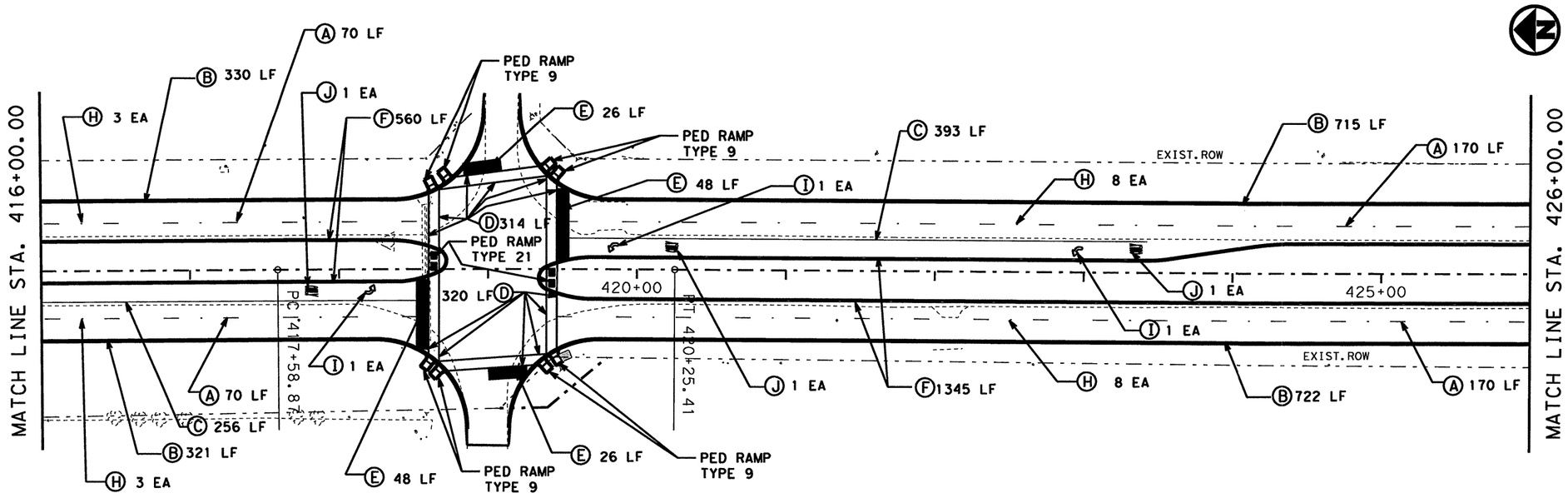

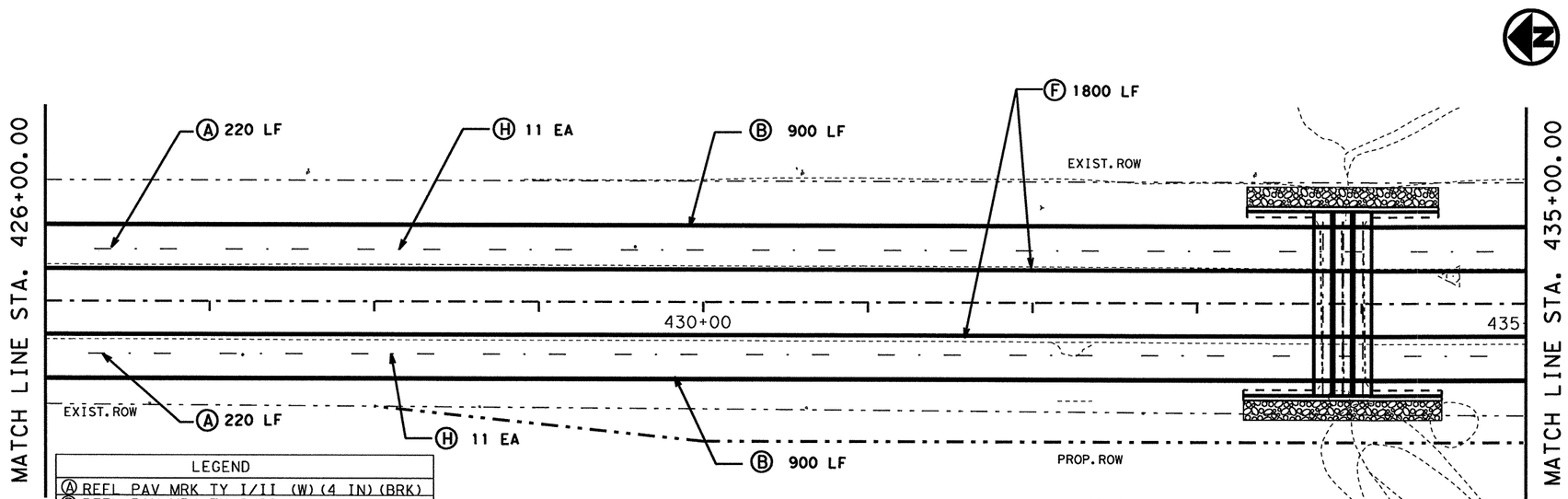

LEGEND
Ⓐ REFL PAV MRK TY I/II (W)(4 IN)(BRK)
Ⓑ REFL PAV MRK TY I/II (W)(4 IN)(SLD)
Ⓒ REFL PAV MRK TY I/II (W)(8 IN)(SLD)
Ⓓ REFL PAV MRK TY I/II (W)(12 IN)(SLD)
Ⓔ REFL PAV MRK TY I/II (W)(24 IN)(SLD)
Ⓕ REFL PAV MRK TY I/II (Y)(4 IN)(SLD)
Ⓗ RAIS PAV MRKR CL B (REFL) TY II-C-R
Ⓘ PREFAB PAV MRK TY A (W) (ARROW)
Ⓙ PREFAB PAV MRK TY A (W) (WORD)

NOTES:

1. TYPE II PAVEMENT MARKINGS SHALL BE USED AS A SEALER FOR THE TYPE I PAVEMENT MARKINGS.

2. FINAL PAVEMENT MARKINGS SHALL MATCH THE LIMITS OF EXISTING PAVEMENT MARKINGS.

STATE OF TEXAS
MAHER F. KARAM
107452
LICENSED
PROFESSIONAL ENGINEER

Signature of Registrant, P.E. & Date 4/7/11

Texas Department of Transportation
© 2011

SH 289
PAVEMENT MARKINGS
STA 416+00 TO STA 435+00

SCALE: 1"= 80' SHEET 7 OF 12

DESIGN	FED. RD. DIV. NO.	STATE PROJECT NO.		HIGHWAY NO.
MK	6	SEE TITLE SHEET		SH 289
GRAPHICS	STATE	DISTRICT	COUNTY	SHEET NO.
MK	TEXAS	18	COLLIN	444
CHECK NVS	CONTROL	SECTION	JOB	
CHECK NVS	0091	04	055	

R-201104-01

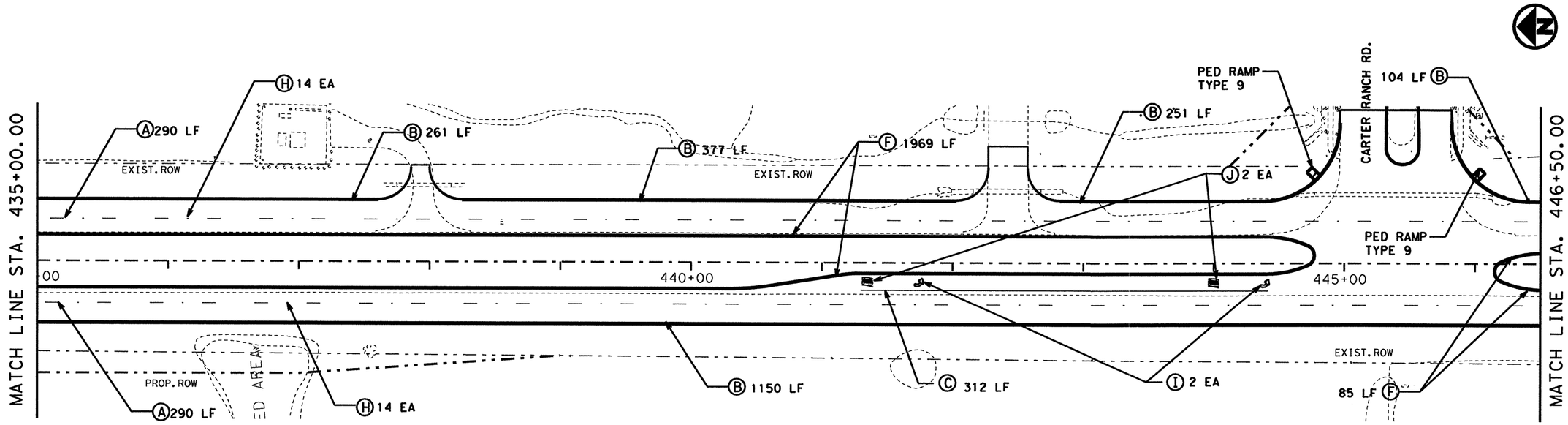

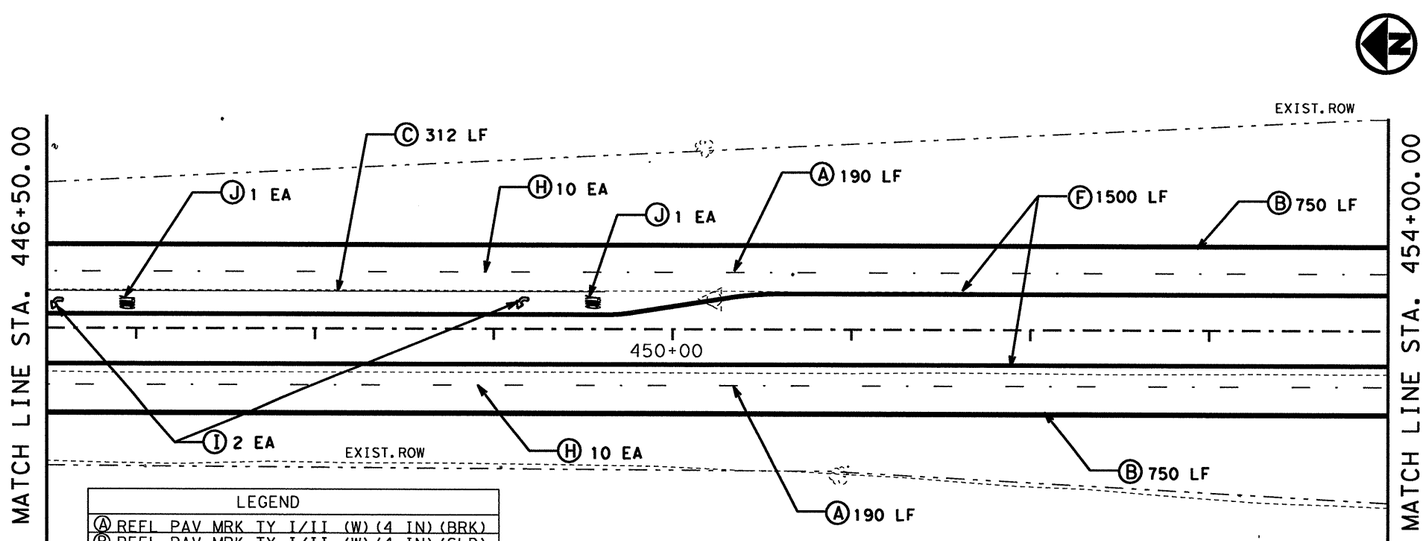

LEGEND
Ⓐ REFL PAV MRK TY I/II (W)(4 IN)(BRK)
Ⓑ REFL PAV MRK TY I/II (W)(4 IN)(SLD)
Ⓒ REFL PAV MRK TY I/II (W)(8 IN)(SLD)
Ⓓ REFL PAV MRK TY I/II (W)(12 IN)(SLD)
Ⓔ REFL PAV MRK TY I/II (W)(24 IN)(SLD)
Ⓕ REFL PAV MRK TY I/II (Y)(4 IN)(SLD)
Ⓗ RAIS PAV MRKR CL B (REFL) TY II-C-R
Ⓘ PREFAB PAV MRK TY A (W) (ARROW)
Ⓙ PREFAB PAV MRK TY A (W) (WORD)

NOTES:

1. TYPE II PAVEMENT MARKINGS SHALL BE USED AS A SEALER FOR THE TYPE I PAVEMENT MARKINGS.

2. FINAL PAVEMENT MARKINGS SHALL MATCH THE LIMITS OF EXISTING PAVEMENT MARKINGS.

STATE OF TEXAS
MAHER F. KARAM
107452
LICENSED PROFESSIONAL ENGINEER

Signature of Registrant & Date, P.E. 4/7/11

Texas Department of Transportation
© 2011

SH 289
PAVEMENT MARKINGS
STA 435+00 TO STA 454+00

SCALE: 1"= 80' SHEET 8 OF 12

DESIGN	FED. RD. DIV. NO.	STATE PROJECT NO.		HIGHWAY NO.
MK	6	SEE TITLE SHEET		SH 289
GRAPHICS MK	STATE	DISTRICT	COUNTY	SHEET NO.
CHECK NVS	TEXAS	18	COLLIN	445
CHECK NVS	CONTROL	SECTION	JOB	
	0091	04	055	

R-201104-01

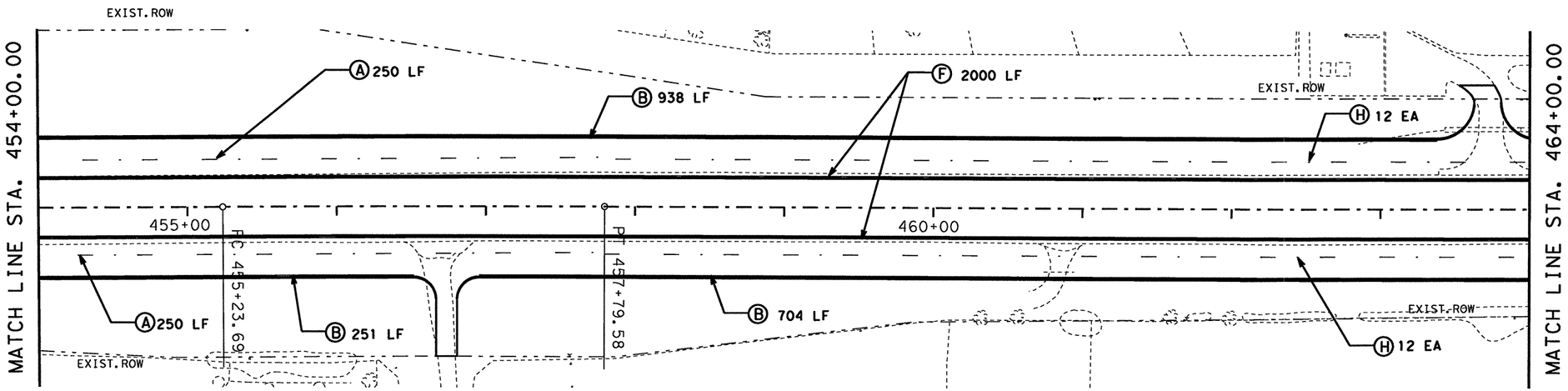

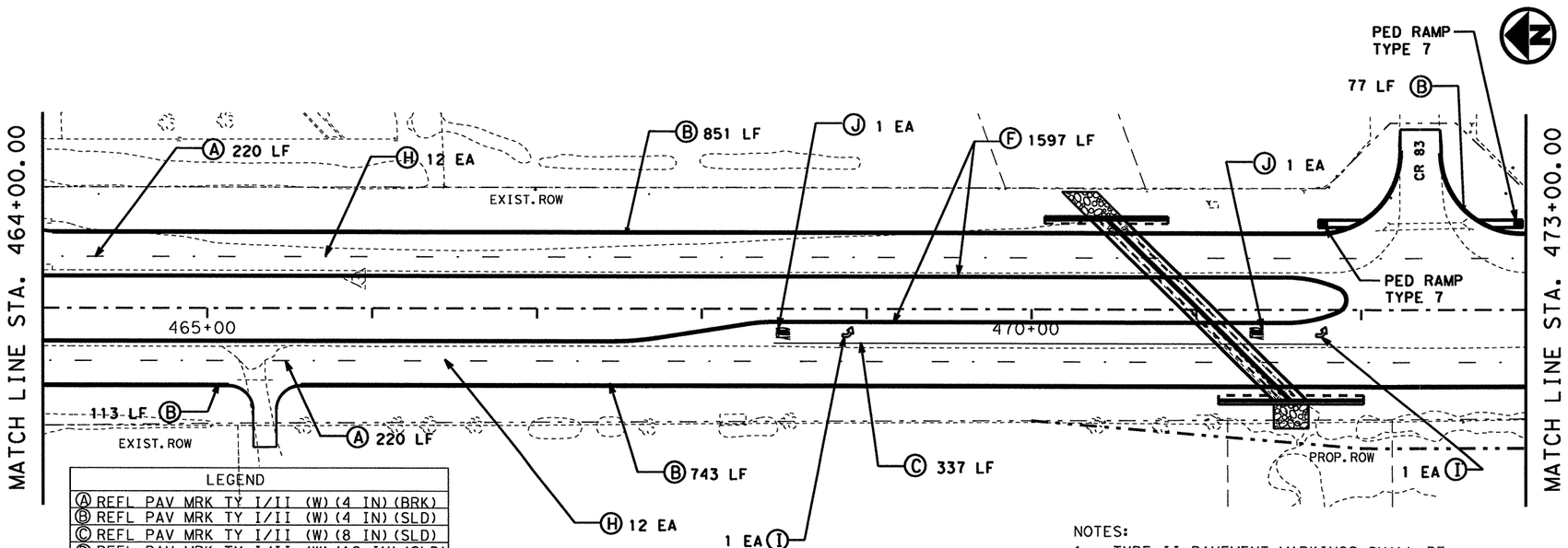

LEGEND
Ⓐ REFL PAV MRK TY I/II (W)(4 IN)(BRK)
Ⓑ REFL PAV MRK TY I/II (W)(4 IN)(SLD)
Ⓒ REFL PAV MRK TY I/II (W)(8 IN)(SLD)
Ⓓ REFL PAV MRK TY I/II (W)(12 IN)(SLD)
Ⓔ REFL PAV MRK TY I/II (W)(24 IN)(SLD)
Ⓕ REFL PAV MRK TY I/II (Y)(4 IN)(SLD)
Ⓗ RAIS PAV MRKR CL B (REFL) TY II-C-R
Ⓘ PREFAB PAV MRK TY A (W) (ARROW)
Ⓙ PREFAB PAV MRK TY A (W) (WORD)

NOTES:

1. TYPE II PAVEMENT MARKINGS SHALL BE USED AS A SEALER FOR THE TYPE I PAVEMENT MARKINGS.

2. FINAL PAVEMENT MARKINGS SHALL MATCH THE LIMITS OF EXISTING PAVEMENT MARKINGS.

STATE OF TEXAS
MAHER F. KARAM
107452
LICENSED PROFESSIONAL ENGINEER

Signature of Registrant, P.E. & Date 4/7/11

Texas Department of Transportation
© 2011

SH 289
PAVEMENT MARKINGS
STA 454+00 TO STA 473+00

SCALE: 1"= 80' SHEET 9 OF 12

DESIGN	FED. RD. DIV. NO.	STATE PROJECT NO.		HIGHWAY NO.
MK	6	SEE TITLE SHEET		SH 289
GRAPHICS	STATE	DISTRICT	COUNTY	SHEET NO.
MK	TEXAS	18	COLLIN	446
CHECK NVS	CONTROL	SECTION	JOB	
CHECK NVS	0091	04	055	

R-201104-01

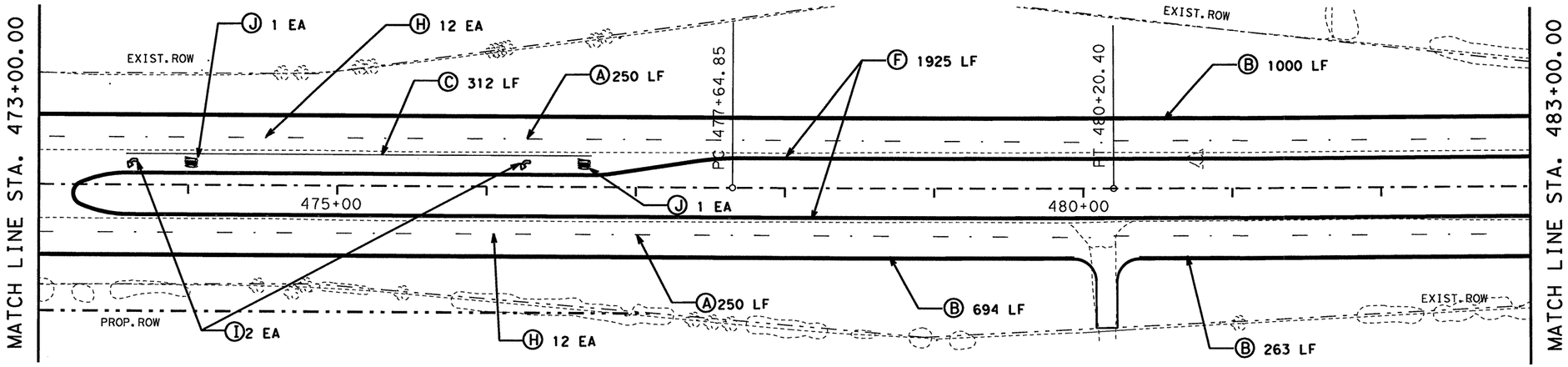

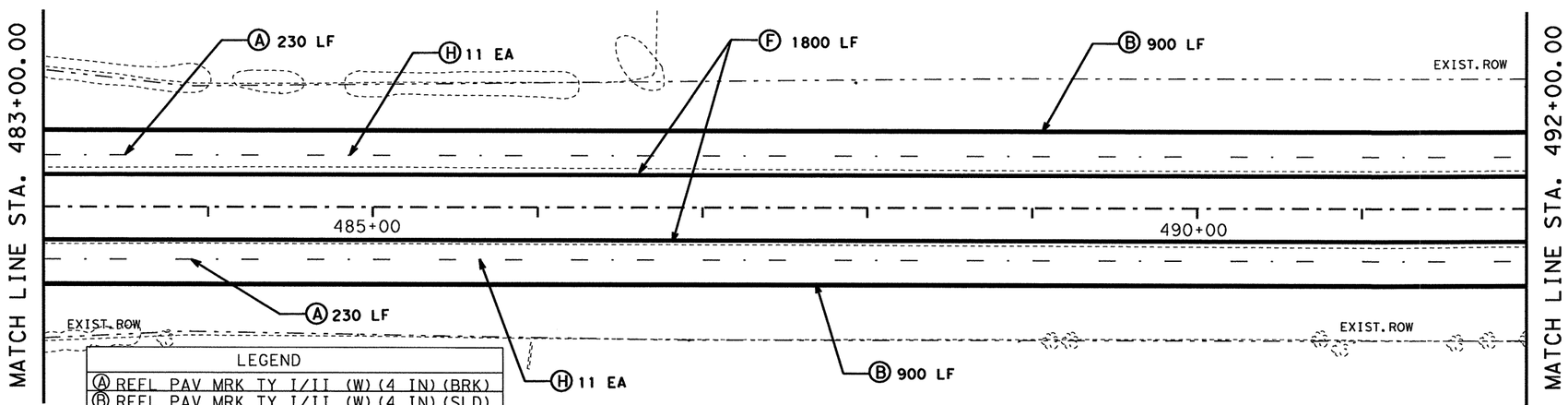

LEGEND
Ⓐ REFL PAV MRK TY I/II (W)(4 IN)(BRK)
Ⓑ REFL PAV MRK TY I/II (W)(4 IN)(SLD)
Ⓒ REFL PAV MRK TY I/II (W)(8 IN)(SLD)
Ⓓ REFL PAV MRK TY I/II (W)(12 IN)(SLD)
Ⓔ REFL PAV MRK TY I/II (W)(24 IN)(SLD)
Ⓕ REFL PAV MRK TY I/II (Y)(4 IN)(SLD)
Ⓗ RAIS PAV MRKR CL B (REFL) TY II-C-R
Ⓘ PREFAB PAV MRK TY A (W) (ARROW)
Ⓙ PREFAB PAV MRK TY A (W) (WORD)

NOTES:

1. TYPE II PAVEMENT MARKINGS SHALL BE USED AS A SEALER FOR THE TYPE I PAVEMENT MARKINGS.

2. FINAL PAVEMENT MARKINGS SHALL MATCH THE LIMITS OF EXISTING PAVEMENT MARKINGS.

STATE OF TEXAS
MAHER F. KARAM
107452
LICENSED PROFESSIONAL ENGINEER

Signature of Registrant & Date, P.E. 4/1/21

Texas Department of Transportation
© 2011

SH 289
PAVEMENT MARKINGS
STA 473+00 TO STA 492+00

SCALE: 1"= 80' SHEET 10 OF 12

DESIGN	FED.RD. DIV.NO.	STATE PROJECT NO.		HIGHWAY NO.
MK	6	SEE TITLE SHEET		SH 289
GRAPHICS MK	STATE	DISTRICT	COUNTY	SHEET NO.
CHECK NVS	TEXAS	18	COLLIN	447
CHECK NVS	CONTROL	SECTION	JOB	
	0091	04	055	

R-201104-01

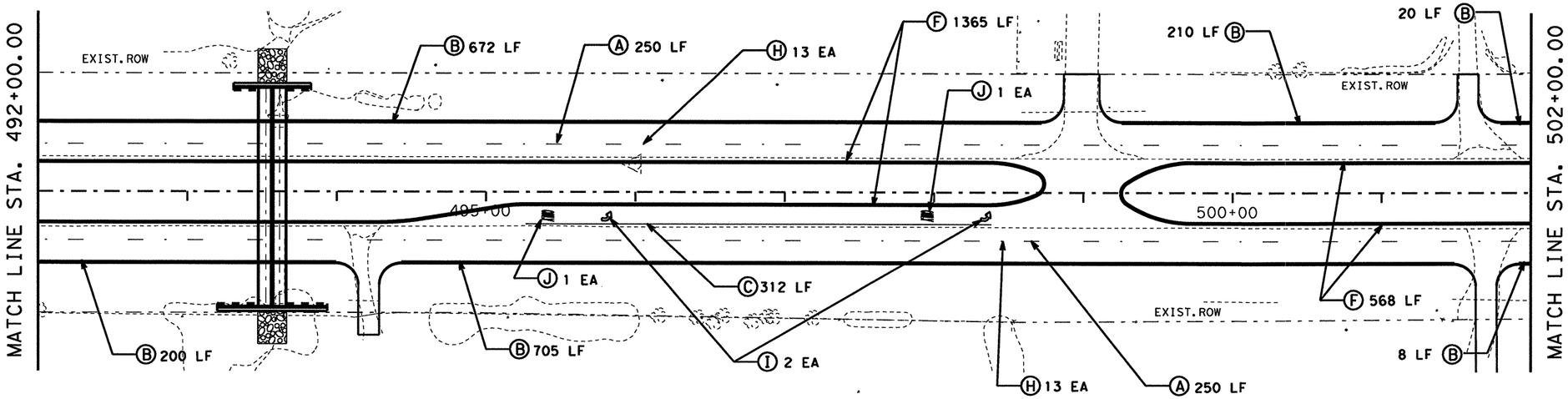

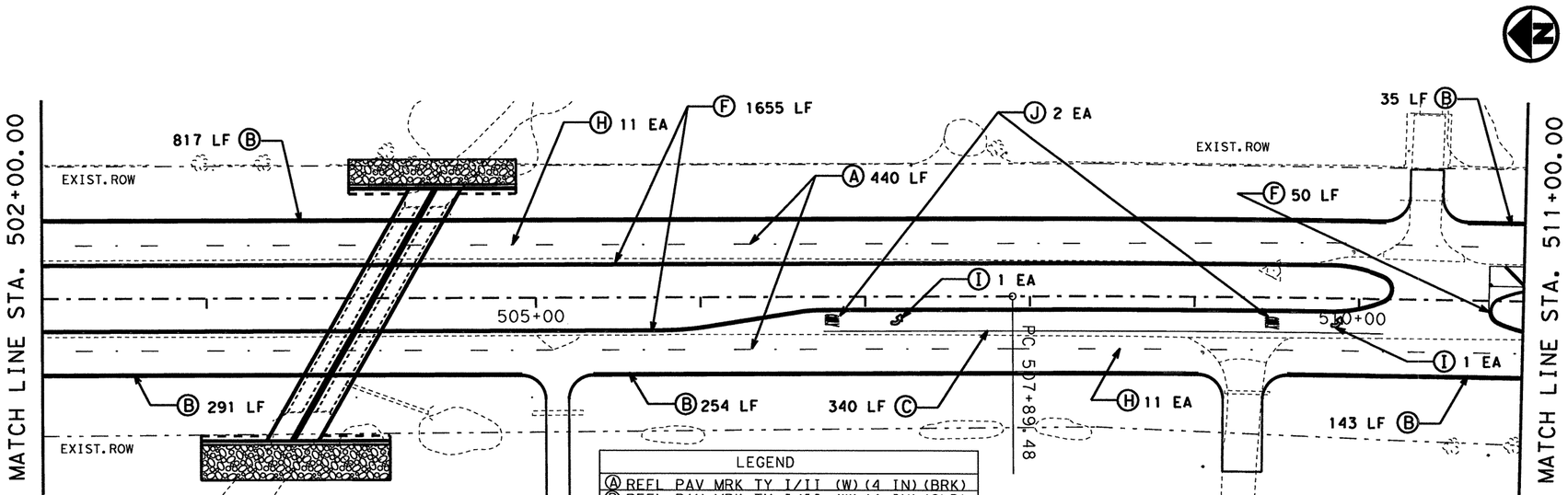

LEGEND
A REFL PAV MRK TY I/II (W)(4 IN)(BRK)
B REFL PAV MRK TY I/II (W)(4 IN)(SLD)
C REFL PAV MRK TY I/II (W)(8 IN)(SLD)
D REFL PAV MRK TY I/II (W)(12 IN)(SLD)
E REFL PAV MRK TY I/II (W)(24 IN)(SLD)
F REFL PAV MRK TY I/II (Y)(4 IN)(SLD)
H RAIS PAV MRKR CL B (REFL) TY II-C-R
I PREFAB PAV MRK TY A (W) (ARROW)
J PREFAB PAV MRK TY A (W) (WORD)

NOTES:

1. TYPE II PAVEMENT MARKINGS SHALL BE USED AS A SEALER FOR THE TYPE I PAVEMENT MARKINGS.

2. FINAL PAVEMENT MARKINGS SHALL MATCH THE LIMITS OF EXISTING PAVEMENT MARKINGS.

STATE OF TEXAS
MAHER F. KARAM
107452
LICENSED PROFESSIONAL ENGINEER

Signature of Registrant, P.E. & Date 4/7/11

Texas Department of Transportation
© 2011

SH 289
PAVEMENT MARKINGS
STA 492+00 TO STA 511+00

SCALE: 1"= 80'

SHEET 11 OF 12

DESIGN	FED. RD. DIV. NO.	STATE PROJECT NO.		HIGHWAY NO.
MK	6	SEE TITLE SHEET		SH 289
GRAPHICS	STATE	DISTRICT	COUNTY	SHEET NO.
MK	TEXAS	18	COLLIN	448
CHECK	CONTROL	SECTION	JOB	
NVS	0091	04	055	
CHECK NVS				

R-201104-01

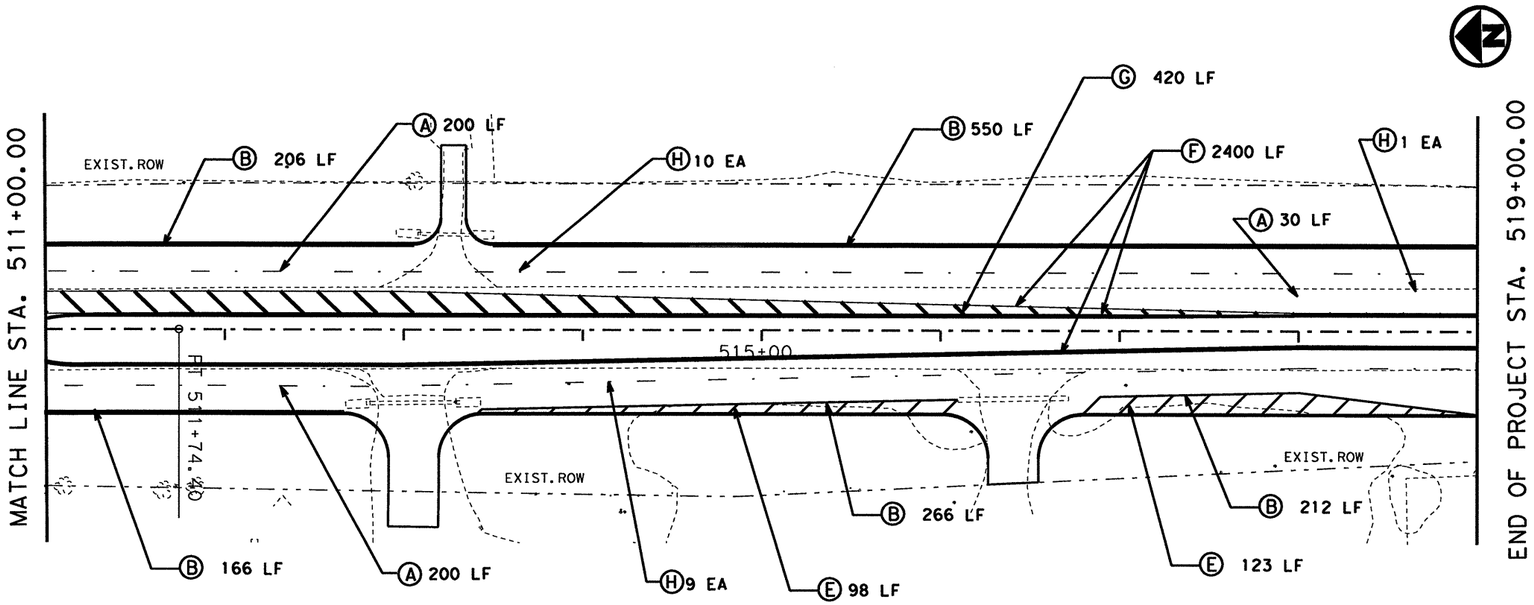

LEGEND
Ⓐ REFL PAV MRK TY I/II (W)(4 IN)(BRK)
Ⓑ REFL PAV MRK TY I/II (W)(4 IN)(SLD)
Ⓒ REFL PAV MRK TY I/II (W)(8 IN)(SLD)
Ⓓ REFL PAV MRK TY I/II (W)(12 IN)(SLD)
Ⓔ REFL PAV MRK TY I/II (W)(24 IN)(SLD)
Ⓕ REFL PAV MRK TY I/II (Y)(4 IN)(SLD)
Ⓖ REFL PAV MRK TY I/II (Y)(24 IN)(SLD)
Ⓗ RAIS PAV MRKR CL B (REFL) TY II-C-R
Ⓘ PREFAB PAV MRK TY A (W) (ARROW)
Ⓙ PREFAB PAV MRK TY A (W) (WORD)

NOTES:

1. TYPE II PAVEMENT MARKINGS SHALL BE USED AS A SEALER FOR THE TYPE I PAVEMENT MARKINGS.

2. FINAL PAVEMENT MARKINGS SHALL MATCH THE LIMITS OF EXISTING PAVEMENT MARKINGS.

STATE OF TEXAS
MAHER F. KARAM
107452
LICENSED
PROFESSIONAL ENGINEER

Signature of Registrant & Date: , P.E. 4/7/11

Texas Department of Transportation
© 2011

SH 289
PAVEMENT MARKINGS
STA 511+00 TO STA 519+00

SCALE: 1"= 80' SHEET 12 OF 12

DESIGN	FED. RD. DIV. NO.	STATE PROJECT NO.		HIGHWAY NO.
MK	6	SEE TITLE SHEET		SH 289
GRAPHICS MK	STATE	DISTRICT	COUNTY	SHEET NO.
CHECK NVS	TEXAS	18	COLLIN	449
CHECK NVS	CONTROL	SECTION	JOB	
	0091	04	055	

R-201104-01

DISCLAIMER: The use of this standard is governed by the "Texas Engineering Practice Act". No warranty of any kind is made by TxDOT for any purpose whatsoever. TxDOT assumes no responsibility for the conversion of this standard to other formats or for incorrect results or damages resulting from its use.

TWO LANE TWO-WAY ROADWAY WITH OR WITHOUT SHOULDERS

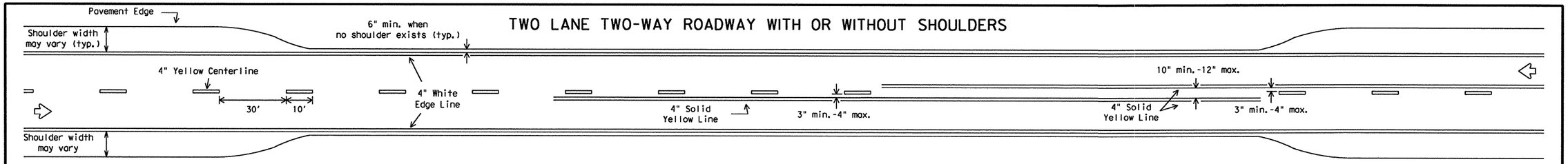

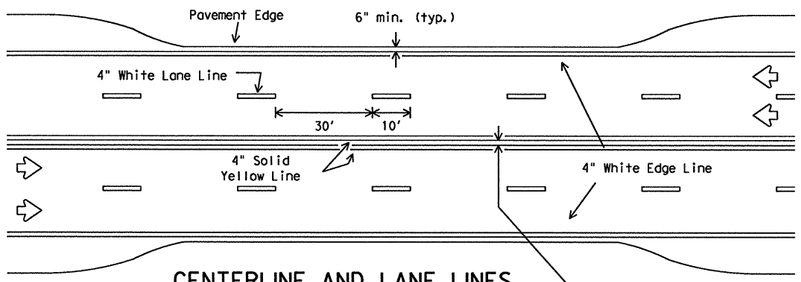

CENTERLINE AND LANE LINES FOUR LANE TWO-WAY ROADWAY WITH OR WITHOUT SHOULDERS

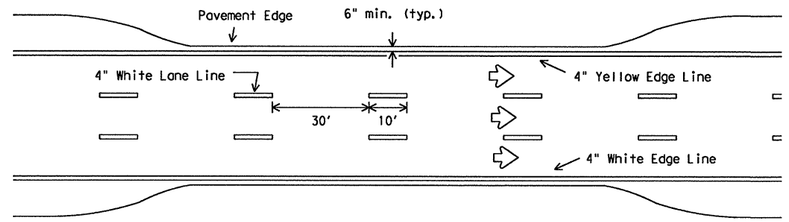

EDGE LINE AND LANE LINES ONE-WAY ROADWAY WITH OR WITHOUT SHOULDERS

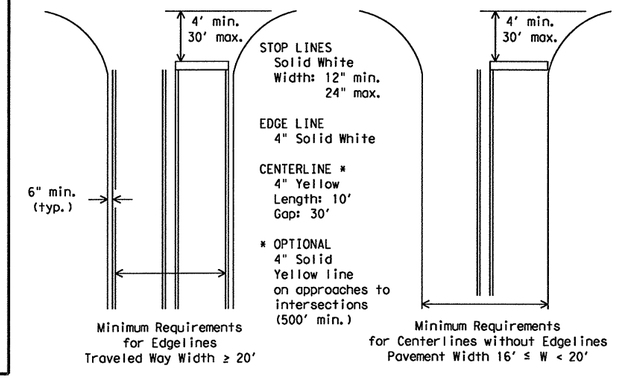

GUIDE FOR PLACEMENT OF STOP LINES, EDGE LINE & CENTERLINE

Based on Traveled Way and Pavement Widths for Undivided Highways

FOUR LANE DIVIDED ROADWAY INTERSECTIONS

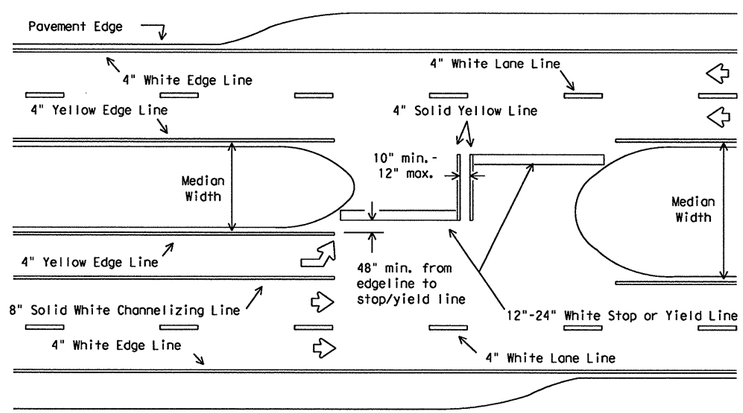

All medians shall be field measured to determine the location of necessary striping. Stop/Yield bars and centerlines shall be placed when the median width is greater than 30 ft. The median width is defined as the area between two roadways of a divided highway measured from edge of traveled way to edge of traveled way. The median excludes turn lanes. The median width might be different between intersections, interchanges and of opposite approaches of the same intersection. The narrow median width will be the controlling width to determine if markings are required.

ROADWAYS WITH REDUCED SHOULDER WIDTHS ACROSS BRIDGE OR CULVERT

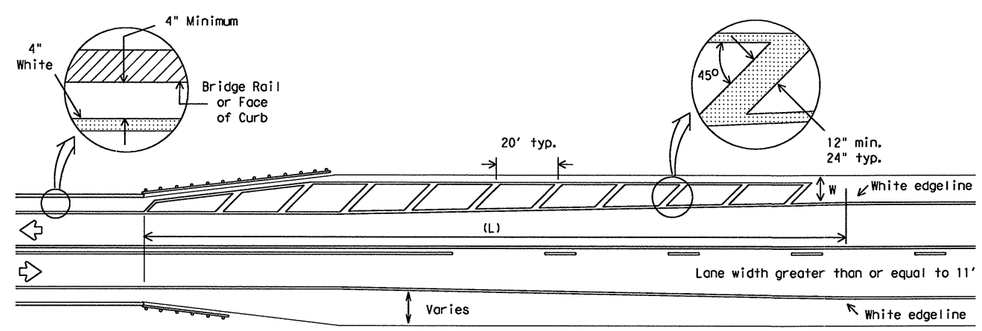

NOTES:

1. No-passing zone on bridge approach is optional but if used, it shall be a minimum 500 feet long.
2. For crosshatching length (L) see Table 1.
3. The width of the offset (W) and the required crosshatching width is the full shoulder width in advance of the bridge.
4. The crosshatching should be required if the shoulder width in advance of the bridge is 4 foot or wider and any reduction in shoulder width across the bridge occurs.
5. For guard fence details, refer elsewhere in the plans.

TABLE 1 - TYPICAL LENGTH (L)

Posted Speed *	Formula
30, 35, 40	$L = \frac{WS^2}{60}$
45, 50, 55, 60, 65, 70	L=WS

* 85th Percentile Speed may be used on roads where traffic speeds normally exceed the posted speed limit. Crosshatching length should be rounded up to nearest 5 foot increment.

L=Length of Crosshatching (FT.) W=Width of Offset (FT.)
S=Posted Speed (MPH)

EXAMPLES:

An 8 foot shoulder in advance of a bridge reduces to 4 feet on a 70 MPH roadway. The length of the crosshatching should be:

$L = 8 \times 70 = 560$ ft.

A 4 foot shoulder in advance of a bridge reduces to 2 feet on a 40 MPH roadway. The length of the crosshatching should be:

$L = 4(40)^2 / 60 = 106.67$ ft. rounded to 110 ft.

GENERAL NOTES:

Edgeline striping shall be as shown in the plans or as directed by the Engineer. The edgeline should typically be placed a minimum of 6 inches from the edge of pavement. This distance may vary due to pavement raveling or other conditions. Edgelines are not required in curb and gutter sections of roadways.

The traveled way includes only that portion of the roadway used for vehicular travel and not the parking lanes, sidewalks, berms and shoulders. The traveled ways shall be measured from the inside of edgeline to inside of edgeline of a two lane roadway.

All pavement marking materials shall meet the required Departmental Material Specifications as specified by the plans.

SPECIFICATION REFERENCE TABLE

MATERIAL SPECIFICATIONS	
PAVEMENT MARKERS (REFLECT.)	DMS-4200
EPOXY	DMS-6100
BITUMINOUS ADHESIVE FOR PAVEMENT MARKERS	DMS-6130

YIELD LINES

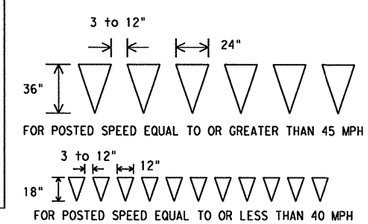

Texas Department of Transportation
Traffic Operations Division

TYPICAL STANDARD PAVEMENT MARKINGS

PM(1)-03

©TxDOT November 1978

REVISIONS: 8-95, 5-00, 8-00, 3-03

DN: TXDOT	CK: TXDOT	DW: TXDOT	CK: TXDOT
CONT	SECT	JOB	HIGHWAY
0091	04	055	SH 289
DIST		COUNTY	SHEET NO.
18		COLLIN	450

224

DATE:
FILE:

R-201104-01

DISCLAIMER: The use of this standard is governed by the "Texas Engineering Practice Act". No warranty of any kind is made by TxDOT for any purpose whatsoever. TxDOT assumes no responsibility for the conversion of this standard to other formats or for incorrect results or damages resulting from its use.

REFLECTIVE RAISED PAVEMENT MARKERS FOR VEHICLE POSITIONING GUIDANCE

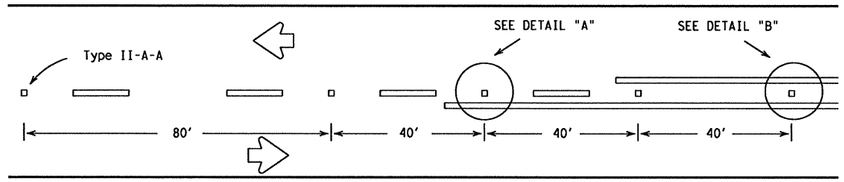

CENTERLINE FOR ALL TWO LANE ROADWAYS

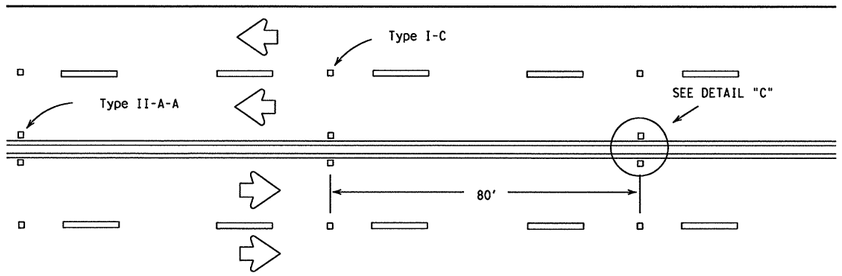

CENTERLINE & LANE LINES FOR FOUR LANE TWO-WAY HIGHWAYS

Raised pavement marker Type I-C, clear face toward normal traffic, shall be placed on 80-foot centers.

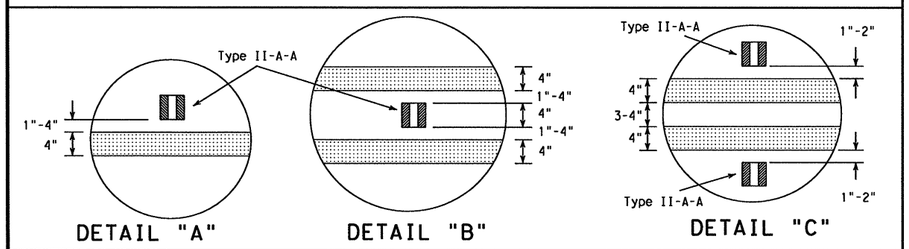

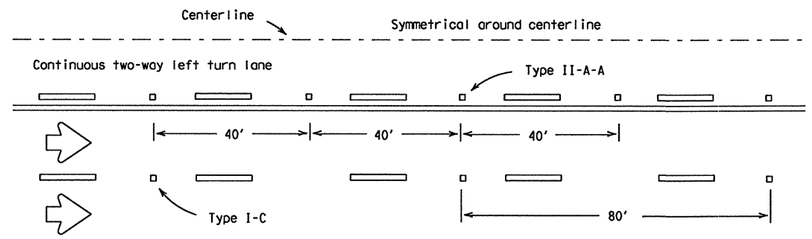

CENTERLINE AND LANE LINES FOR TWO-WAY LEFT TURN LANE

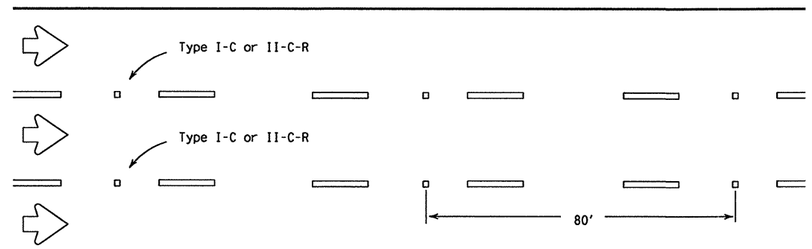

LANE LINES FOR ONE-WAY ROADWAY (NON-FREEWAY FACILITIES)

Raised pavement markers Type II-C-R shall have clear face toward normal traffic and red face toward wrong-way traffic.

RAISED PAVEMENT MARKERS

(REFLECTORIZED)

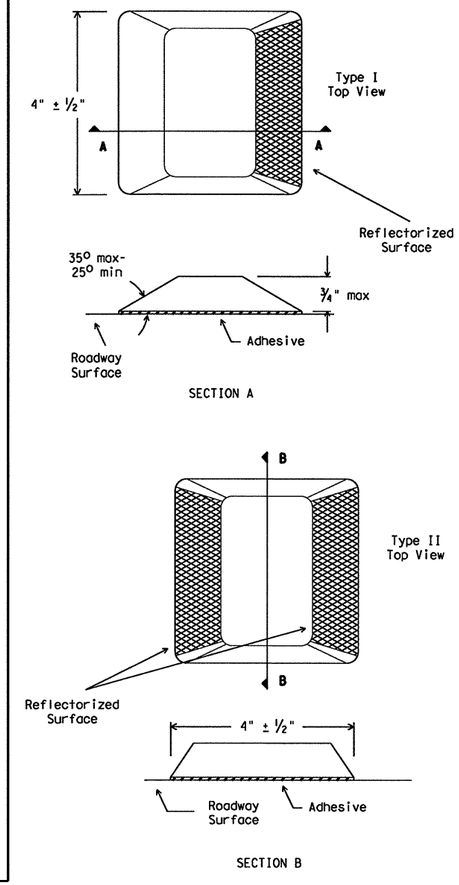

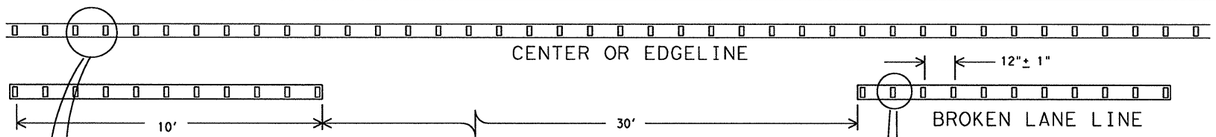

REFLECTORIZED PROFILE PATTERN DETAIL

USING REFLECTIVE PROFILE PAVEMENT MARKINGS

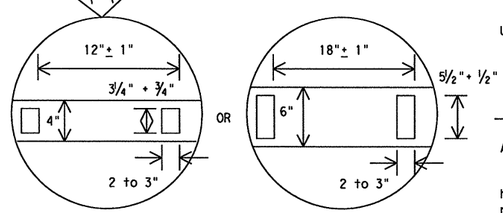

4" EDGE LINE OR CENTERLINE

OPTIONAL 6" EDGE LINE OR CENTERLINE

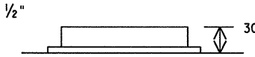

A quick field check for the thickness of base line and profile marking is approximately equal to a stack of 5 quarters to a maximum height of 7 quarters. For base line thickness refer to Special Specification "Reflectorized Profile Pavement Markings."

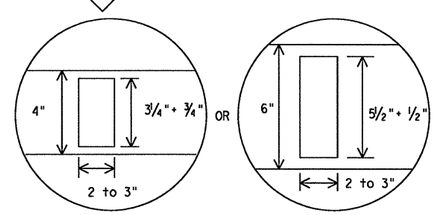

4" LANE LINE

OPTIONAL 6" LANE LINE

NOTE:
Profile markings shall not be placed on roadways with a posted speed limit of 45 MPH or less.

GENERAL NOTES:

All raised pavement markers placed in broken lines shall be placed in line with and midway between the stripes.

On concrete pavements the raised pavement markers should be placed to one side of the longitudinal joints.

All pavement marking materials shall meet the required Departmental Material Specifications as specified by the plans.

SPECIFICATION REFERENCE TABLE

MATERIAL SPECIFICATIONS	
PAVEMENT MARKERS (REFLECT.)	DMS-4200
EPOXY	DMS-6100
BITUMINOUS ADHESIVE FOR PAVEMENT MARKERS	DMS-6130

Texas Department of Transportation
Traffic Operations Division

POSITION GUIDANCE USING RAISED MARKERS
REFLECTORIZED PROFILE MARKINGS

PM(2)-10

© TxDOT April 1977

DN: TXDOT	CK: TXDOT	DW: TXDOT	CK: TXDOT

REVISIONS
4-92 2-10
5-00
8-00
2-08

CONT	SECT	JOB	HIGHWAY
0091	04	055	SH 289
DIST		COUNTY	SHEET NO.
18		COLLIN	451

22B

DATE:
FILE:

R-201104-01

DISCLAIMER:
The use of this standard is governed by the "Texas Engineering Practice Act". No warranty of any kind is made by TxDOT for any purpose whatsoever. TxDOT assumes no responsibility for the conversion of this standard to other formats or for incorrect results or damages resulting from its use.

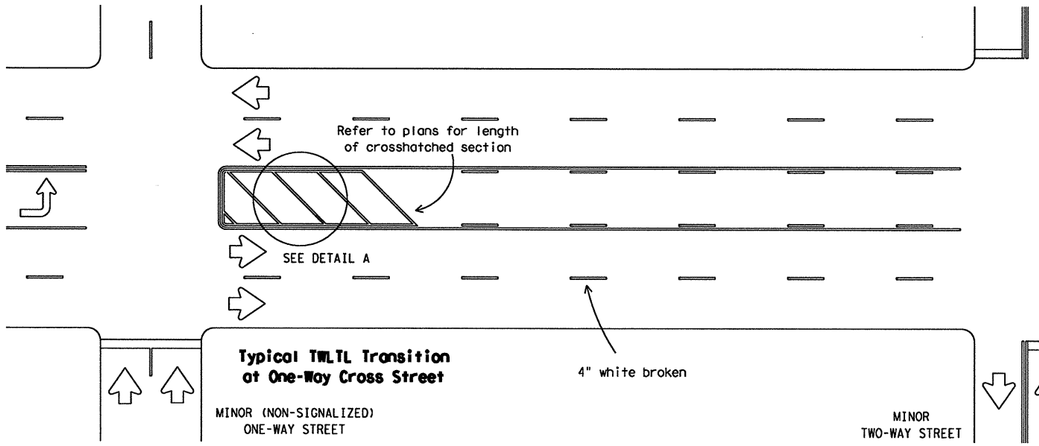

Typical TWLTL Transition at One-Way Cross Street

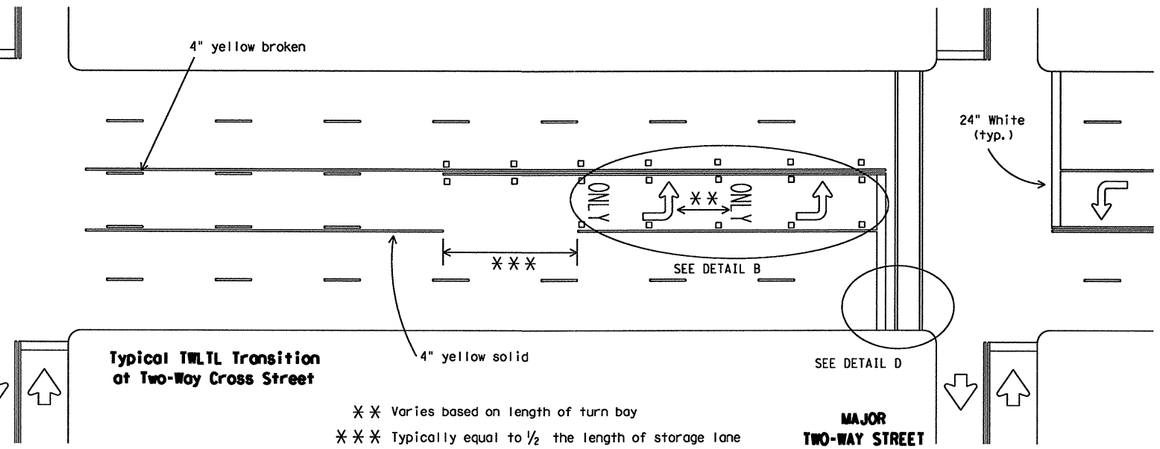

Typical TWLTL Transition at Two-Way Cross Street

✱✱ Varies based on length of turn bay
✱✱✱ Typically equal to ½ the length of storage lane

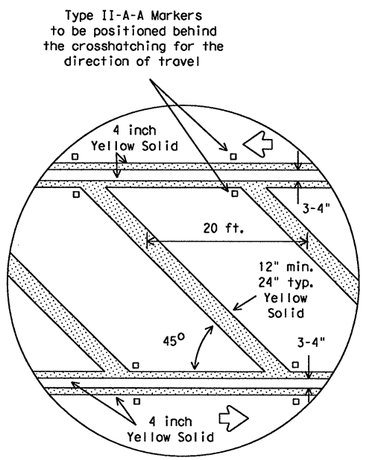

DETAIL A

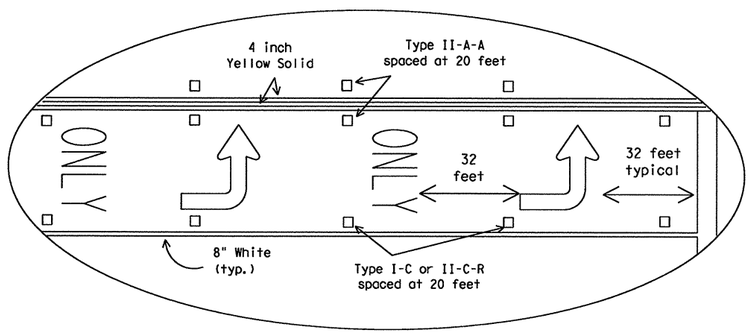

DETAIL B

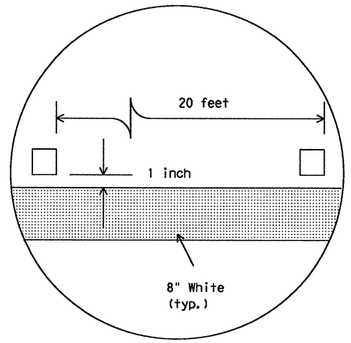

DETAIL C

Raised pavement marker Type I-C with undivided highways, flush medians and two way left turn lanes. Raised pavement marker Type II-C-R with divided highways and raised medians.

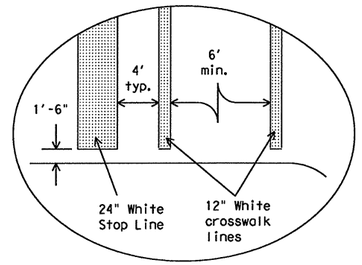

DETAIL D

Final placement of Stop Bar and Crosswalk shall be approved by the Engineer in the field.

GENERAL NOTES

Refer elsewhere in plans for additional RPM placement and details.

Details for words and arrows as shown on other sheets.

All pavement marking materials shall meet the required Departmental Material Specifications as specified by the plans.

For a left turn bay, two sets of words and arrows shall be used if the length of the bay is equal to or greater than 180 feet. The bottom of the first ONLY shall be placed at the beginning of the turn bay lane line as shown above.

Other crosswalk paterns as shown in the "Texas Manual on Uniform Traffic Control Devices" may be used.

SPECIFICATION REFERENCE TABLE

MATERIAL SPECIFICATIONS	
PAVEMENT MARKERS (REFLECT.)	DMS-4200
EPOXY	DMS-6100
BITUMINOUS ADHESIVE FOR PAVE. MKS.	DMS-6130

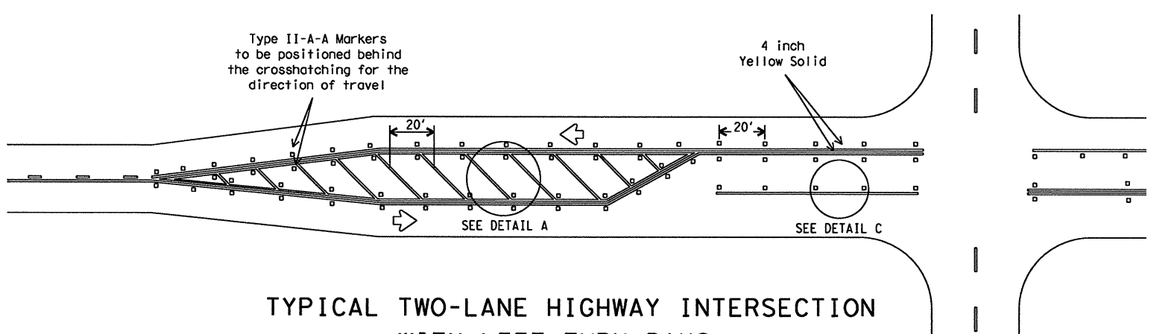

TYPICAL TWO-LANE HIGHWAY INTERSECTION WITH LEFT TURN BAYS

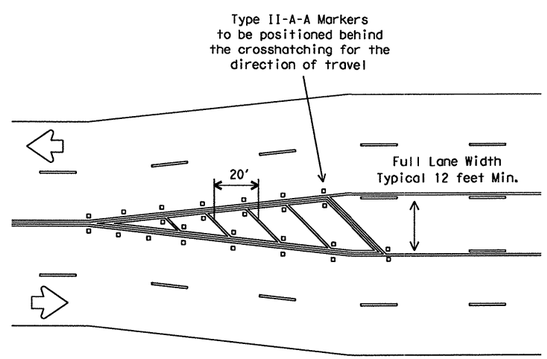

TYPICAL TRANSITION FOR TWLTL AND DIVIDED HIGHWAY

Texas Department of Transportation
Traffic Operations Division

PAVEMENT MARKINGS FOR TWO-WAY LEFT TURN LANES DIVIDED HIGHWAYS AND RURAL LEFT TURN BAYS

PM(4)-10

©TxDOT April 1998

DN: TXDOT	CK: TXDOT	DW: TXDOT	CK: TXDOT

REVISIONS
5-00
8-00
3-03
2-10

CONT	SECT	JOB	HIGHWAY
0091	04	055	SH 289
DIST		COUNTY	SHEET NO.
18		COLLIN	452

22D

DATE:
FILE:

R-201104-01

DISCLAIMER: The use of this standard is governed by the "Texas Engineering Practice Act". No warranty of any kind is made by TxDOT for any purpose whatsoever. TxDOT assumes no responsibility for the conversion of this standard to other formats or for incorrect results or damages resulting from its use.

Texas Department of Transportation
Traffic Operations Division

STANDARD PAVEMENT MARKINGS (WORDS)

PM(5)-01

© TxDOT March 2001	DN: TXDOT	CK: TXDOT	DW: TXDOT	CK: TXDOT
REVISIONS	CONT	SECT	JOB	HIGHWAY
	0091	04	055	SH 289
	DIST		COUNTY	SHEET NO.
	18		COLLIN	453

22G

DATE:
FILE:

R-201104-01

DISCLAIMER: The use of this standard is governed by the "Texas Engineering Practice Act". No warranty of any kind is made by TxDOT for any purpose whatsoever. TxDOT assumes no responsibility for the conversion of this standard to other formats or for incorrect results or damages resulting from its use.

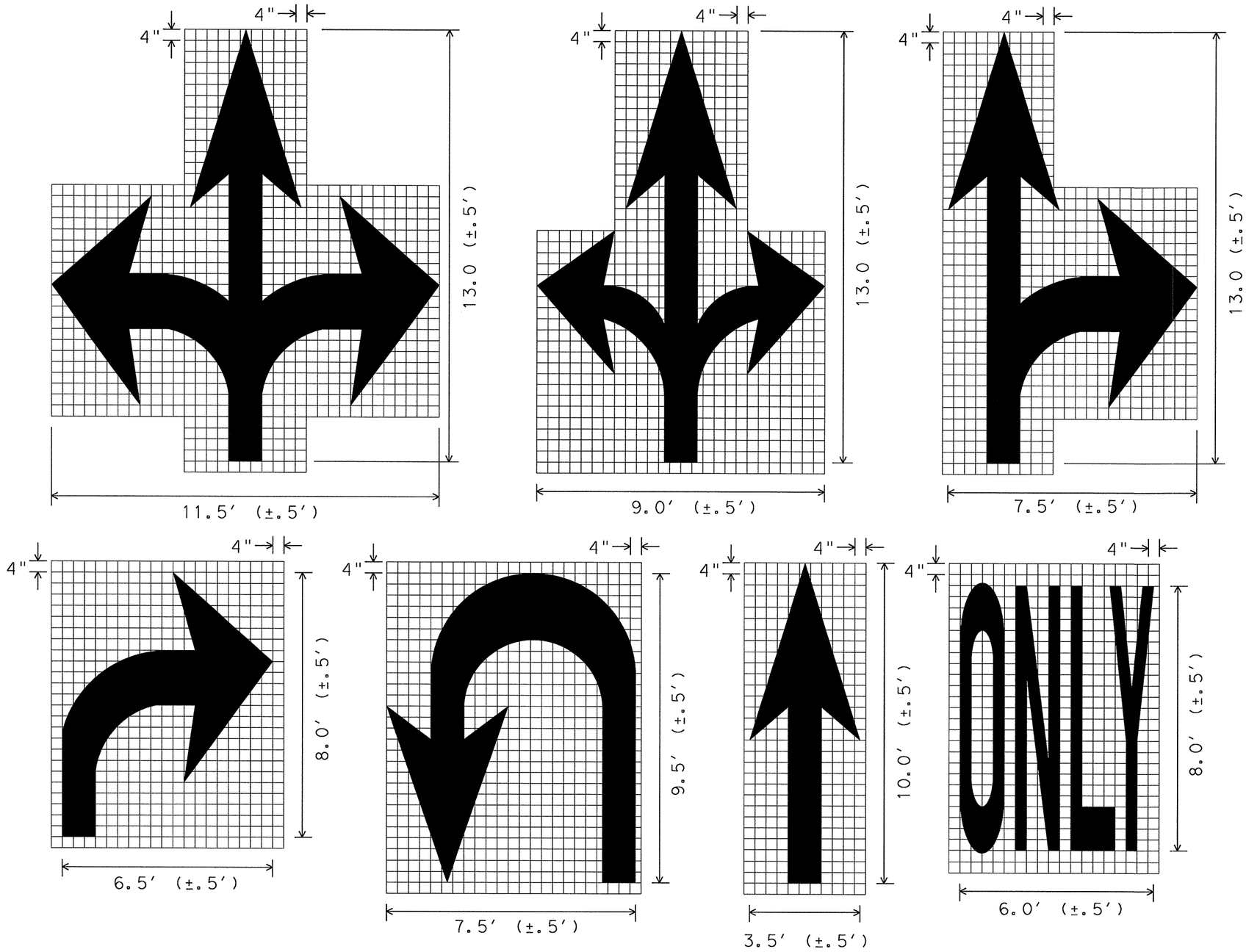

GENERAL NOTES;

1. Minimum 8 foot white markings should be used, unless otherwise noted. If message consists of more than one word, it should be placed with first word nearest the driver.
2. These details are standard size for normal installation; sizes may be reduced approximately one-third for low speed urban conditions; larger sizes may be needed for freeways, above average speed conditions or other critical locations.
3. The longitudinal space between markings should be at least four times the height of the markings, on low speed roads, but should not exceed ten times the height under any condition.
4. Markings considered appropriate for use when warranted include the following:
   A. Regulatory
      STOP
      RIGHT (LEFT) TURN ONLY
      25 MPH
      SYMBOL ARROWS
   B. Warning
      STOP AHEAD
      SIGNAL AHEAD
      SCHOOL
      SCHOOL X-ING
      PED X-ING
      R X R (see RCPM standard)
   C. Guide
      US XXX
      ROUTE XXX
      STATE XXX
      Other words or symbols may be necessary under certain conditions
5. Uncontrolled use of pavement markings can result in driver confusion. Word and symbol markings should be no more than three lines.
6. The word "STOP" shall not be used on the pavement unless accompanied by a Stop line and Stop sign. The word "STOP" shall not be placed on the pavement in advance to a stop line, unless every vehicle is required to stop at all times.
7. Pavement markings should generally be no more than one lane in width, with School messages being the exception. For details of School and School crossing pavement markings, refer to Part VII of the "Texas Manual on Uniform Traffic Control Devices".
8. Spacing between letters should be approximately 4 inches. The width of letters may vary depending on the width of the travel lanes.
9. Lane-Use arrow markings may be used to convey either guidance or mandatory messages. Arrows used to convey a mandatory movement must be accompanied by standard signs and the pavement marking word "ONLY".
10. Pavement markings are to be located as specified elsewhere in the plans.

SPACING BETWEEN LINES OF PAVEMENT MARKINGS	
MPH	SPACING
≤45	MINIMUM 4 TIMES THE LETTER HEIGHT
>45	MINIMUM - 4 TIMES THE LETTER HEIGHT MAXIMUM - 10 TIMES THE LETTER HEIGHT

Texas Department of Transportation
Traffic Operations Division

STANDARD PAVEMENT MARKINGS (ARROWS)

PM(6)-01

©TxDOT March 2001

REVISIONS

DN: TXDOT	CK: TXDOT	DW: TXDOT	CK: TXDOT
CONT	SECT	JOB	HIGHWAY
0091	04	055	SH 289
DIST		COUNTY	SHEET NO.
18		COLLIN	454

22H

DATE:
FILE:

R-201104-01

1. Do not alter Sheet Design or Font style, size or weight - match text attributes.
2. If additional space is needed for a n ared section, fence and adjust sections up or down as needed for proportioning and real ity but do not relocate from its relative position.
3. All areas should be addressed thoroughly and verify the necessary pay items are set up to support actions needed.

Revised: October, 2010
Prepared by xxxxxxx of xxxxxxxx on xx/xx/xx

During the planning phase of project development the following environmental permits, issues and commitments have been developed during coordination with resource agencies, local governmental entities and the general public. Any change orders and/or deviations from the final design must be reported to the Engineer prior to the commencement of construction activities, as additional environmental clearances may be required.

I. Clean Water Act, Section 402 Texas Pollutant Discharge Elimination System

(Addresses MS4 requirements for project)

(Note: In the event that the Contractor implements a PSL on or within one mile of the project, a Site Notice and/or NOI will apply.)

☐ No Action Required ☒ Required Action

Action No.	Waters of the US/Station # R/L of Centerline	Commitment

Action 1. Project disturbes more than five acres surface area: TxDOT must file NOI and coordinate with TCEQ for CGP.

Action 2. TxDOT must file NOT

Commitment 1: Comply with TPDES CGP. Contractor must implement and maintain a SW3P. See SW3P Plan Sheet, BMPs and Details

Commitment 2: Contractor must stabilize project site as stated in SW3P

Waters of the US:

Doe Branch at Station 308+91.41
Unnamed Tributary-Culvert #2 at Station 339+94.24
Doe Branch Tributary H at Station 391+53.32
Unnamed Tributary-Culvert #6 at Station 401+71.57
Doe Branch Tributary G at Station 433+88.54
Unnamed Tributary #1 at Station 493+61.32
Unnamed Tributary #2 at Station 504+01.38

II. Clean Water Act, Section 401 and 404 Compliance

Filling, dredging or excavating in any water bodies, rivers, creeks, streams, wetlands or wet area is prohibited unless specified in the USACE permit and approved by the Engineer.

When temporary fill is implemented, only stated District standards will be used unless written authorization for an alternative is obtained from the Engineer. No equipment is allowed in any stream channel below the Ordinary High Water Mark except on temporary stream crossings or drill pads.

☐ No Permit Required ☒ 404 Permit and 401 Certification Required

Permit	Required Action	Waters of the US	Applicable Plan Sheet Number
NW #14,	Comply with General Conditions of the Permit, Preconstruction Notification to the Corps not required	Doe Branch at Sta 308+91.41	plan sheet #
		Culvert #2 at Sta 339+94.24	plan sheet #
		Doe Branch Trib. H at Sta 391+53.32	plan sheet #
		Culvert #6 at Sta 401+71.57	plan sheet #
		Doe Branch Trib. G at Sta 433+88.54	plan sheet #
		Unnamed Trib. #1 at Sta493+61.32	plan sheet #
		Unnamed Trib. #2 at Sta504+01.38	plan sheet #

Best Management Practices for applicable 401 General Conditions:

General Condition 12 - Categories I and II BMPs required

Category I (Erosion Control)

- ☒ Temporary Vegetation
- ☐ Mulch
- ☐ Interceptor Swale
- ☐ Erosion Control Compost
- ☐ Compost Filter Berms and Socks
- ☐ Blankets, Matting
- ☐ Sod
- ☐ Diversion Dike
- ☐ Mulch Filter Berms and Socks
- ☐ Compost Blankets

Category II (Sedimentation Control)

- ☐ Sand Bag Berm
- ☐ Silt Fence
- ☐ Triangular Filter Dike
- ☐ Stone Outlet Sediment Traps
- ☒ Erosion Control Compost
- ☐ Compost Filter Berms and Socks
- ☒ Rock Berm
- ☐ Hay Bale Dike
- ☐ Brush Berms
- ☐ Sediment Basins
- ☐ Mulch Filter Berms and Socks

General Condition 21 - Category III BMPs required

Category III (Post-Construction TSS Control)

- ☐ Retention/Irrigation
- ☐ Extended Detention Basin
- ☒ Vegetative Filter Strips
- ☐ Grassy Swales
- ☐ Erosion Control Compost
- ☐ Compost Filter Berms and Socks
- ☐ Constructed Wetlands
- ☐ Wet Basins
- ☐ Vegetation-Lined Ditches
- ☐ Sand Filter Systems
- ☐ Mulch Filter Berms and Socks
- ☐ Sedimentation Chambers

III. Cultural Resources

Upon discovery of archeological artifacts (bones, burnt rock, flint, pottery, etc.) cease work in the immediate area and contact the Engineer immediately.

☒ No Action Required ☐ Required Action

Action No.	Station # R/L of Centerline	Commitment

IV. Vegetation Resources

☒ No Action Required ☐ Required Action

Action No.	Station # R/L of Centerline	Commitment

V. Federal Listed, and Proposed Threatened and Endangered Species, Critical Habitat, State Listed Species, Candidate Species and Migratory Birds Treaty Act (MBTA)

☒ No Action Required ☐ Required Action

Species Potentially within Project Area w/ Description	Habitat Description	Action

Special Notes

The Migratory Bird Treaty Act of 1918 states that it is unlawful to kill, capture, collect, possess, buy, sell, trade, or transport any migratory bird, nest, young, feather, or egg in part or in whole, without a federal permit issued in accordance within the Act's policies and regulations. The contractor would remove all old migratory bird nests from any structures where work would be done from October 1 to February 15. In addition, the contractor would be prepared to prevent migratory birds from building nests between February 15 and October 1. In the event that migratory birds are encountered on-site during project construction, efforts to avoid adverse impacts on protected birds, active nests, eggs, and/or young would be observed.

VI. Hazardous Materials or Contamination Issues

Comply with the Hazardous Communication Act for personnel who will be working with hazardous materials by conducting safety meetings prior to beginning construction and making workers aware of the potential hazards in the workplace. Ensure that all workers are provided with personal protective equipment appropriate for any hazardous materials used.

Obtain and keep on-site Material Safety Data Sheets (MSDS) for all hazardous products used on the project which may include, but are not limited to, the following categories: Paints, acids, solvents, asphalt products, chemical additives, fuels and concrete curing compounds or additives. Provide protected storage, off bare ground and covered, for products which may be hazardous. Maintain product labeling as required by the Act.

Maintain an adequate supply of on-site spill response materials, as indicated in the MSDS. In the event of a spill, take actions to mitigate the spill as indicated in the MSDS, in accordance with safe work practices, and contact the District Spill Coordinator immediately. The Contractor shall be responsible for the proper containment and cleanup of all product spills.

Contractor will follow all applicable storage and management requirements for liquid oil products, liquid petroleum products and other chemical liquids as per 40 CFR 112 (a.k.a SPCC) and/or TCEQ Contruction General Permit for storm water management.

Contact the Engineer if any of the following are detected:

Dead or distressed vegetation (not identified as normal)
Trash piles, drums, canisters, barrels, etc.
Undesirable smells/odors
Underground storage tanks
Evidence of leaching or seepage of substances
Any other evidence indicating possible hazardous materials or contamination discovered on-site

****

Does the project involve any bridge class structure rehabilitation or replacements (bridge class structures not including box culverts)?

☐ Yes ☒ No

If "No", then no further action required.
If "Yes", then TxDOT is responsible for completing an asbestos assessment/inspection.

Are the results of the asbestos inspection positive (is asbestos present)?

☐ Yes ☒ No

If "Yes", then TxDOT must retain a Texas Department of State Health Services (DSHS) licensed asbestos consultant to assist with the notification, develop abatement/mitigation procedures, and perform management activities as necessary. The notification form to DSHS must be postmarked at least 15 working days prior to scheduled abatement activities and/or demolition.

If "No", then TxDOT is still required to notify DSHS 15 working days prior to any scheduled demolition.

In either case, the Contractor is responsible for providing the date(s) for abatement activities and/or demolition with careful coordination between the Engineer and asbestos consultant in order to minimize construction delays and subsequent claims.

VII. Other Environmental Issues

☒ No Action Required ☐ Required Action

Action No.	Station # R/L of Centerline	Commitment

Special Note:

Measures to control fugitive dust would be considered and incorporated into the final design and construction specifications.

List of Abbreviations

BMP: Best Management Practice
CGP: Construction General Permit
FEMA: Federal Emergency Management Agency
FHWA: Federal Highway Administration
MOA: Memorandum of Agreement
MOU: Memorandum of Understanding
MS4: Municipal Separate Stormwater Sewer System
NOI: Notice of Intent
NOT: Notice of Termination
NWP: Nationwide Permit
PCN: Pre-Construction Notification
SW3P: Storm Water Pollution Prevention Plan
TCEQ: Texas Commission on Environmental Quality
TPDES: Texas Pollutant Discharge Elimination System
TPWD: Texas Parks and Wildlife Department
TxDOT: Texas Department of Transportation
T&E: Threatened and Endangered Species
USACE: U.S. Army Corp of Engineers
USFWS: U.S. Fish and Wildlife Service
MBTA: Migratory Bird Treaty Act
PSL: Project Specific Location
SPCC: Spill Prevention Control and Countermeasure

© 2011
Texas Department of Transportation
Dallas District (DAL)

ENVIRONMENTAL PERMITS, ISSUES AND COMMITMENTS (EPIC)

FED. RD. DIV. NO.	STATE PROJECT NO.		HIGHWAY NO.
6	C 91-4-55		SH 289
STATE	DISTRICT	COUNTY	SHEET NO.
TEXAS	DALLAS	COLLIN	455
CONTROL	SECTION	JOB	
0091	04	055	

R-201104-01

A. GENERAL SITE DATA

1. PROJECT LIMITS: *FROM NORTH OF FM 1461 TO FM 455 IN CELINA*

Project Coordinates: *BEGIN LATITUDE: + 33.26266153* *BEGIN LONGITUDE: - 96.78440094*
END LATITUDE: + 33.37031976 *END LONGITUDE: - 96.76671982*

2. PROJECT SITE MAPS:

- *Project Location Map: The Title Sheet*
- *Drainage Patterns: Drainage Area Maps (Sheets 151-153)*
- *Slopes Anticipated After Major Gradings or Areas of Soil Disturbance: Typical Sections (Sheets 9-16)*
- *Location of Erosion and Sediment Controls: SW3P Site Maps (Sheets 286-309)*
- *Surface Waters and Discharge Locations: Drainage and Culvert Layouts (Sheets 235-245 , 262-269)*
- *Project Specific Locations: To be specified by the Project Field Office during construction and located in the Project SW3P File. Reference item #10 below.*

3. PROJECT DESCRIPTION:

FOR THE RECONSTRUCTION AND WIDEN TWO LANE RURAL HIGHWAY TO SIX LANE. Consisting of: GR, STR, PVMT, SIGNS, PVMT MKGS.

4. MAJOR SOIL DISTURBING ACTIVITIES:

Soil disturbing activities will include removal of old concrete pavement, excavation, erosion logging for storm sewer, grading and sodding.

5. EXISTING CONDITION OF SOIL & VEGETATIVE COVER AND % OF EXISTING VEGETATIVE COVER:

Non-Disturb soil covered in 100% bermuda.

The soils within the project areas are a mix of Houston Black Clays.

6. TOTAL PROJECT AREA: *83.60* Acres

7. TOTAL AREA TO BE DISTURBED: *83.60* Acres

8. WEIGHTED RUNOFF COEFFICIENT

BEFORE CONSTRUCTION: *0.65*
AFTER CONSTRUCTION: *0.80*

9. NAME OF RECEIVING WATERS:

DOE BRANCH at Station 308+91.41
Unnamed Tributary-Culvert #2 at Station 339+94.24
Doe Branch Tributary H at Station 391+53.32
Unnamed Tributary-Culvert #6 at Station 401+71.57
Doe Branch Tributary G at Station 433+88.54
Unnamed Tributary #1 at Station 493+61.32
Unnamed Tributary #2 at Station 504+01.38

Receiving waters for Doe Branch and all the Tributaries is Elm Fork Trinity River, segment no. 0823.

10. PROJECT SW3P FILE:

A. For projects disturbing one to five acres, TxDOT will maintaina SW3P file at the project field office which contains the followowing: Index Sheet, TCEQ Signature Authority, TCEQ Small Construction Site Notice, SW3P Inspector Qualification Statements, Inspection and Maintenance Reports, EPIC Sheet, SW3P Sheet, Site Location Maps, Stored Material Lists specifying associated control measures, and the Appendix which contains the TPDES Construction General Permit and the Construction PSL Permits per all applicable requirements.

B. For projects disturbing 5 acres or more, TxDOT will follow the actions listed in (10.A.) above with the addition of the following: Notice Of Intent (N.O.I.) and Fee Payment Form, TCEQ Large Construction Site Notice (to be used instead of Small Site Notice), and TPDES Permit Coverage Notice.

C. For projects disturbing less than one acre, actions described in (10.A.) and (10.B.) above are not required.

B. EROSION AND SEDIMENT CONTROLS

1. SOIL STABILIZATION PRACTICES: (Select T = Temporary or P = Permanent, as applicable)

T TEMPORARY SEEDING
___ MULCHING (Hay or Straw)
P BUFFER ZONES
___ PLANTING
T SEEDING
P SODDING
___ PRESERVATION OF NATURAL RESOURCES
___ FLEXIBLE CHANNEL LINER
___ RIGID CHANNEL LINER
___ SOIL RETENTION BLANKET
___ COMPOST MANUFACTURED TOPSOIL
P VERTICAL TRACKING
T OTHER: *(BIODEGRADABLE EROSION CONTROL LOGS, 8")*

2. STRUCTURAL PRACTICES: (Select T = Temporary or P = Permanent, as applicable)

___ SILT FENCES
T EROSION CONTROL COMPOST LOGS
___ EROSION CONTROL COMPOST BERMS (Low Velocity)
T ROCK FILTER DAMS
___ DIVERSION, INTERCEPTOR, OR PERIMETER DIKES
___ DIVERSION, INTERCEPTOR, OR PERIMETER SWALES
___ DIVERSION DIKE AND SWALE COMBINATIONS
___ PIPE SLOPE DRAINS
___ PAVED FLUMES
T ROCK BEDDING AT CONSTRUCTION EXIT
___ TIMBER MATTING AT CONSTRUCTION EXIT
___ CHANNEL LINERS
___ SEDIMENT TRAPS
___ SEDIMENT BASINS
___ STORM INLET SEDIMENT TRAP
P STONE OUTLET STRUCTURES
P CURBS AND GUTTERS
P STORM SEWERS
___ VELOCITY CONTROL DEVICES
___ OTHER: *(Specify Practice)*

NOTE: TOP OF BMP'S SHOULD NOT BE HIGHER THAN ROADWAY ELEVATION AS NOT TO FLOOD ROADWAY UNLESS PRIOR APPROVAL FROM ENGINNER IS OBTAINED.

3. STORM WATER MANAGEMENT:

A. Storm water drainage will be provided by ditches, inlets, and storm water systems which carry drainage within the R.O.W. to the lows within the roadway and project site which drains to natural facilities.

4. STORM WATER MANAGEMENT ACTIVITIES: (Sequence of Construction)

1. For detail construction activities, see Traffic Control Plan Phase Narrative and Traffic Control Phases. The erosion control activities will follow the Traffic Control Plan Phases.

2. Prior to the start of construction, install erosion logs to protect inlets as shown on SW3P Site Map or as directect by the Engineer.

3. When all construction activity is complete and the site is stabilized and approved by the Engineer, remove all temporary sediment controls.

4. This project is disturbing more that 10 acres but due to safety reasons and lack of adequate drainage easements, retention ponds cannot be provided.

5. NON-STORM WATER DISCHARGES:

Filter non-storm water discharges, or hold in retention basins, before being allowed to mix with storm water. These discharges consist of non-polluted ground water, spring water, foundation and/or footing drain water; and water used for dust control, pavement washing and vehicle washwater containing no detergents.

C. OTHER REQUIREMENTS & PRACTICES

1. MAINTENANCE:

Maintain all erosion and sediment controls in good working order. Perform any necessary repairs at the earliest date possible but no later than 7 calendar days after the surrounding exposed ground has dried sufficiently to prevent further damage from heavy equipment. Stabilize disturbed areas on which construction activities have ceased, temporarily or permanently, within 14 calendar days unless they are scheduled to and do resume within 21 calendar days. The areas adjacent to creeks and drainageways have priority followed by devices protecting storm sewer inlets.

2. INSPECTION:

A TxDOT inspector will perform a regularly scheduled SW3P inspection every 7 calendar days. An Inspection and Maintenance Report, signed by the TxDOT inspector and the Contractor, will be filed for each inspection. Revise and/or repair each BMP control device in accordance with the current Inspection and Maintenance Report and item (1.) above.

3. WASTE MATERIALS:

On a daily basis, or as may be directed, collect all waste materials, trash and debris from the construction site and deposit into a metal dumpster having a secure cover and which meets all state and local city solid waste management requirements. Empty the dumpster as required by regulation, or as may be directed, at a local approved landfill site. Do not bury construction waste on the construction project site.

4. HAZARDOUS WASTE & SPILL REPORTING:

As a minimum, any products in the following categories are considered to be hazardous: Paints, Acids, Solvents, Fuels, Asphalt Products, Chemical Additives for Soil Stabilization, and Concrete Curing Compounds or Additivives. When storing hazardous material on the project site, or at a Project Specific Location, take all practicable precaution to prevent and/or contain any spillage of these materials. In the event of a spill, contact the spill coordinator immediately.

5. SANITARY WASTE:

Use a licensed sanitary waste management contractor to collect all sanitary waste from portable units as may be required by local regulation, or as directed.

6. CONSTRUCTION VEHICLE TRACKING:

On a regular basis, or as may be directed, dampen haul roads for dust control and stabilize construction entrances/exits. Provide for a motorized broom or vacuum type sweeper to be available on a daily basis, or as may be directed, to remove sediment from paved roadways abutting or transversing the project site.

7. MANAGEMENT PRACTICES:

A. Construct disposal areas, stockpiles, haul roads and PSL's in a manner that will minimize and control the amount of sediment that may enter receiving waters. Do not locate disposal areas in any wetland, waterbody or streambed.
B. Locate construction staging areas, vehicle maintenance and PSL's areas in a manner to minimize the runoff of pollutants.
C. When working in or near a wetland, install and maintain operating soil erosion and sediment controls at all times during construction and isolate the work from the wetland.
D. Clear all waterways as soon as practicable of temporary embankment, temporary bridges, matting, falsework, piling, debris or other obstructions placed during construction operations that are not a part of the finished work.
E. Procedures and/or practices should be taken to control dust.
F. Sediment to be removed from roadways daily or when work begins after weather events if construction activities have ceased due to weather event.

△1 Replaced 6/29/11 JB

STATE OF TEXAS
NICHOLAS VON SPENCER
93702
LICENSED PROFESSIONAL ENGINEER

Signature of Registrant , P.E. & Date 6-27-11

Texas Department of Transportation
© 2011

DALLAS DISTRICT ENVIRONMENTAL

STORM WATER POLLUTION PREVENTION PLAN (SW3P)

TEMPLATE REVISION DATE: 10/23/09

DIST	FED REG	STATE PROJECT NO.			SHEET
18	6	C 91-4-55			456
COUNTY		CONTROL	SECT	JOB	HIGHWAY
COLLIN		0091	04	055	SH 289

R-201104-01

FILE NAME
DATE
DESIGNER

1. SEE SW3P SUMMARY FOR SHEET TOTALS.
2. OVERALL SW3P INSTALLATION SHALL FOLLOW CONSTRUCTION SEQUENCE.
3. CURB INLET CONSTRUCTION WILL REQUIRE EROSION CONTROL LOG PLACEMENT IN SUB PHASES NOT SHOWN.
4. ROCK FILTER DAMS ARE PLACED IN THE PHASE SHOWN AND SHALL REMAIN UNTIL FINAL GRADING AND STABILIZATION.
5. CONSTRUCTIONS EXITS SHOWN CAN BE RELOCATED AS REQUIRED WITH APPROVAL OF THE ENGINEER.

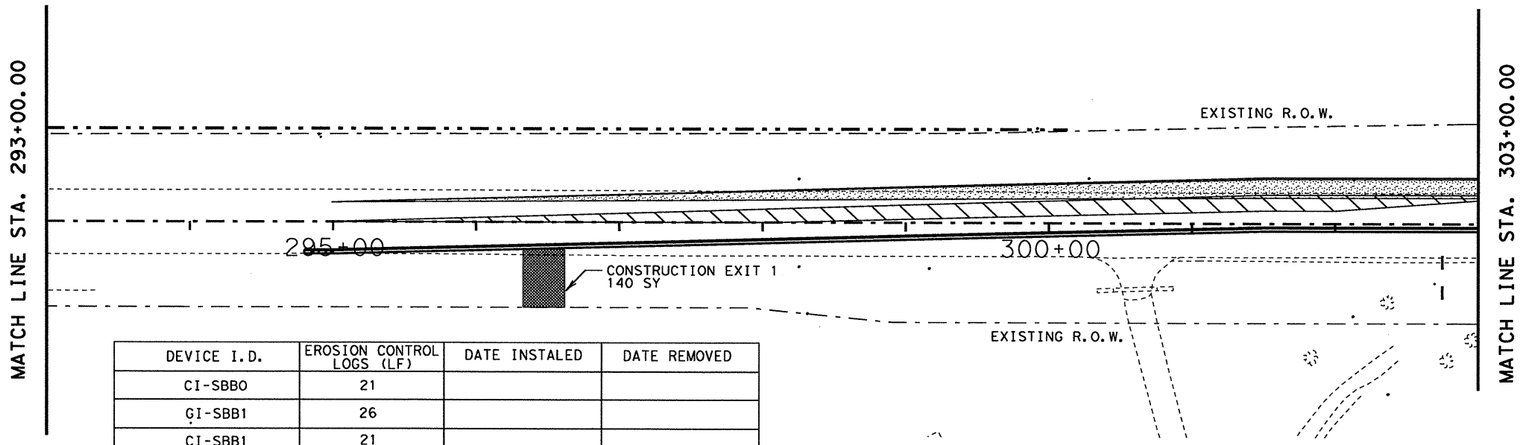

DEVICE I.D.	EROSION CONTROL LOGS (LF)	DATE INSTALED	DATE REMOVED
CI-SBBO	21		
GI-SBB1	26		
CI-SBB1	21		
CI-SBB2	21		
GI-CELINA SC	21		
CI-CELINA SC	21		
CI-SB6	21		
CI-SB5	21		
CONSTRUCTION EXIT 1	-		
RFD 1	-		
BLOCK SOD 1	-		

DATE DISTURBED	DATE STABILIZED

LEGEND:

- TEMPORARY ROCK FILTER DAMS TYPE 3 — RFD3
- SEEDING
- EROSION CONTROL LOG — LOG
- DIRECTION OF FLOW
- CONSTRUCTION EXIT
- BLOCK SOD

SHEET TOTALS				
162 2002	164 2039	506 2003	506 2016	5049 2001
BLOCK SODDING (SY)	DRILL SEEDING (PERM) (URBAN) (CLAY) (SY)	ROCK FILTER DAMS (INSTALL) (TY 3) (LF)	CONSTRUCTION EXITS (INSTALL) (TY 1) (SY)	BIODGRD EROSION CONTROL LOGS (8" DIA) (LF)
30	2665	75	140	173

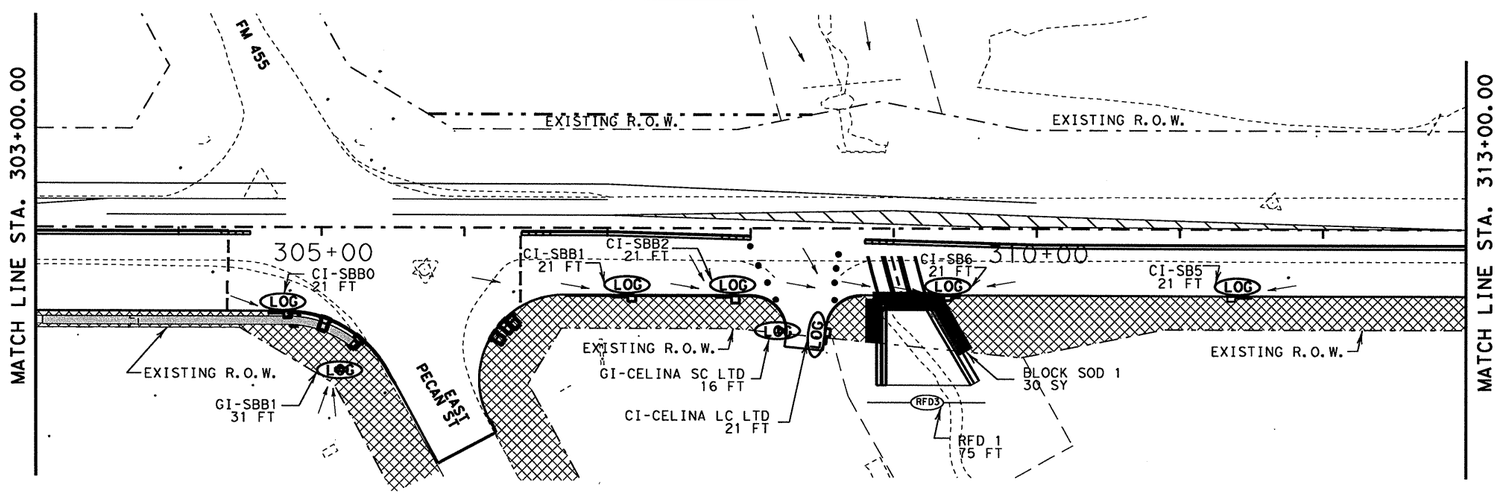

STATE OF TEXAS
NICHOLAS VON SPENCER
93702
LICENSED PROFESSIONAL ENGINEER

Signature of Registrant & Date, P.E. 5-25-11

Texas Department of Transportation
© 2011

SH 289
SW3P LAYOUT PHASE I

SCALE: 1"=100'

SHEET 1 OF 12

DESIGN	FED.RD. DIV.NO.	STATE PROJECT NO.		HIGHWAY NO.
DF	6	(SEE TITLE SHEET)		SH 289
GRAPHICS DF	STATE	DISTRICT	COUNTY	SHEET NO.
CHECK NVS	TEXAS	DALLAS	COLLIN	457
CHECK NVS	CONTROL	SECTION	JOB	
	0091	04	055	

T:\DALDGN*A\SH 289 Celina\THE PLANS\SW3P\95% New SW3P sheets\Phase I\SW3P*phase I*1.dgn 5/25/2011 9:19:18 AM

R-201104-01

T:\DALDGN#A\SH 289 Collin\THE PLANS\SW3P\95% New SW3P sheets\Phase I\SW3P*phaseI*2.dgn 5/25/2011 9:19:30 AM

1. SEE SW3P SUMMARY FOR SHEET TOTALS.
2. OVERALL SW3P INSTALLATION SHALL FOLLOW CONSTRUCTION SEQUENCE.
3. CURB INLET CONSTRUCTION WILL REQUIRE EROSION CONTROL LOG PLACEMENT IN SUB PHASES NOT SHOWN.
4. ROCK FILTER DAMS ARE PLACED IN THE PHASE SHOWN AND SHALL REMAIN UNTIL FINAL GRADING AND STABILIZATION.
5. CONSTRUCTIONS EXITS SHOWN CAN BE RELOCATED AS REQUIRED WITH APPROVAL OF THE ENGINEER.

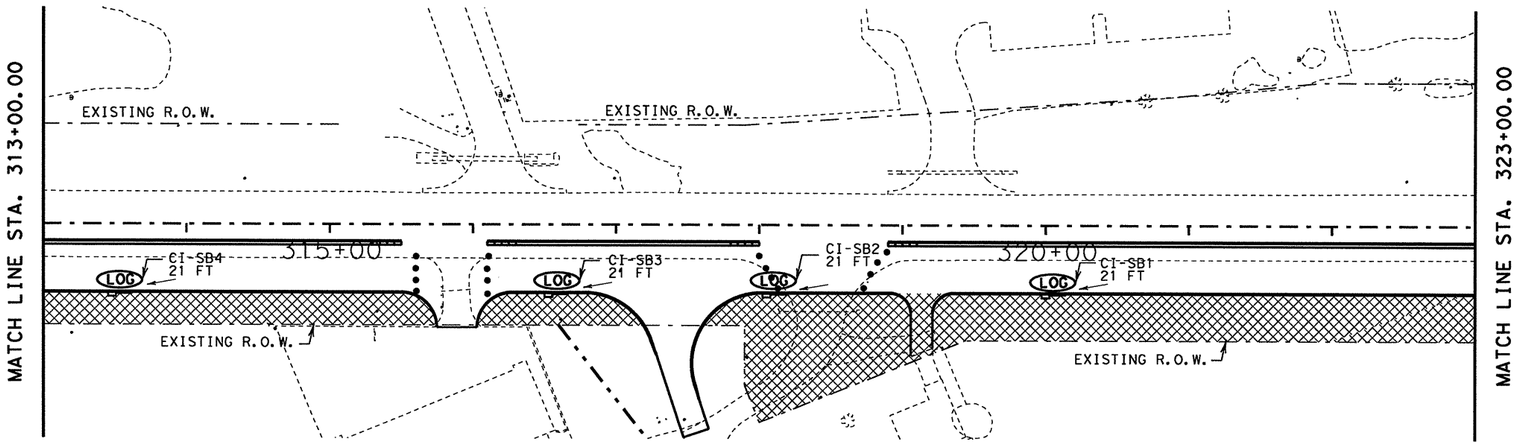

LEGEND:

TEMPORARY ROCK FILTER DAMS TYPE 3	RFD3
SEEDING	
EROSION CONTROL LOG	LOG
DIRECTION OF FLOW	
CONSTRUCTION EXIT	
BLOCK SOD	

DEVICE I.D.	EROSION CONTROL LOGS (LF)	DATE INSTALED	DATE REMOVED
CI-SB4	21		
CI-SB3	21		
CI-SB2	21		
CI-SB1	21		
CI-SCC1	21		
CI-SCC2	21		
CI-SCC3	21		
CI-SCC4	21		
CI-SCC5	21		

DATE DISTURBED	DATE STABILIZED

SHEET TOTALS	
164 2039	5049 2001
DRILL SEEDING (PERM) (URBAN) (CLAY) (SY)	BIODGRD EROSION CONTROL LOGS (8" DIA) (LF)
7338	189

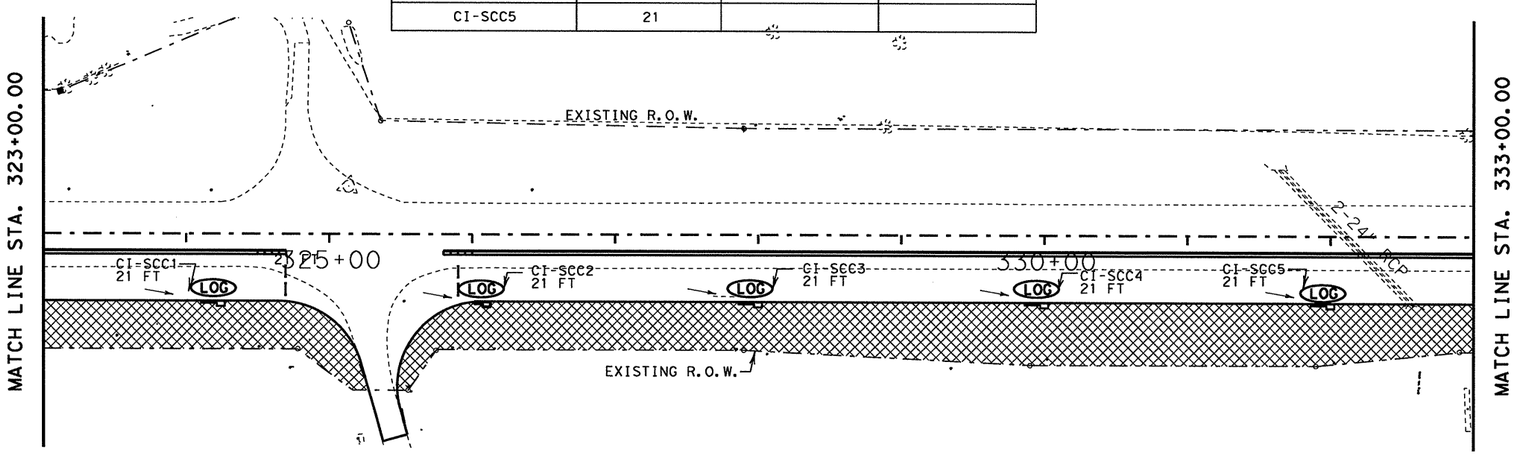

STATE OF TEXAS
NICHOLAS VON SPENCER
93702
LICENSED
PROFESSIONAL ENGINEER

Signature of Registrant & Date, P.E. 5-25-11

Texas Department of Transportation
© 2011

SH 289
SW3P LAYOUT PHASE I

SCALE: 1"=100'

SHEET 2 OF 12

DESIGN	FED. RD. DIV. NO.	STATE PROJECT NO.		HIGHWAY NO.
DF	6	(SEE TITLE SHEET)		SH 289
GRAPHICS DF	STATE	DISTRICT	COUNTY	SHEET NO.
CHECK NVS	TEXAS	DALLAS	COLLIN	458
CHECK NVS	CONTROL	SECTION	JOB	
	0091	04	055	

R-201104-01

T:\DALDGN*A\SH 289 Collin\THE PLANS\SW3P\95% New SW3P sheets\Phase I\SW3P*phaseI*3.dgn 5/25/2011 9:19:42 AM

1. SEE SW3P SUMMARY FOR SHEET TOTALS.
2. OVERALL SW3P INSTALLATION SHALL FOLLOW CONSTRUCTION SEQUENCE.
3. CURB INLET CONSTRUCTION WILL REQUIRE EROSION CONTROL LOG PLACEMENT IN SUB PHASES NOT SHOWN.
4. ROCK FILTER DAMS ARE PLACED IN THE PHASE SHOWN AND SHALL REMAIN UNTIL FINAL GRADING AND STABILIZATION.
5. CONSTRUCTIONS EXITS SHOWN CAN BE RELOCATED AS REQUIRED WITH APPROVAL OF THE ENGINEER.

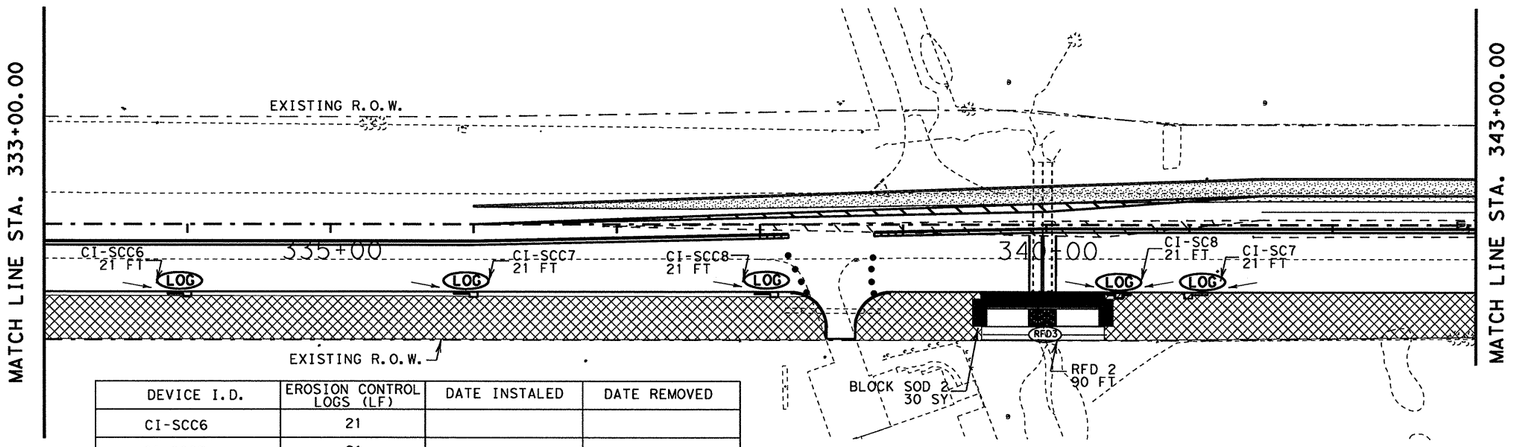

DEVICE I.D.	EROSION CONTROL LOGS (LF)	DATE INSTALED	DATE REMOVED
CI-SCC6	21		
CI-SCC7	21		
CI-SCC8	21		
CI-SC8	21		
CI-SC7	21		
CI-SC6	21		
CI-SC5	21		
CI-SC4	21		
CI-SC3	21		
CI-SC2	21		
RFD 2	-		
BLOCK SOD 2	-		

DATE DISTURBED	DATE STABILIZED

LEGEND:

- TEMPORARY ROCK FILTER DAMS TYPE 3 — RFD3
- SEEDING
- EROSION CONTROL LOG — LOG
- DIRECTION OF FLOW
- CONSTRUCTION EXIT
- BLOCK SOD

SHEET TOTALS				
162 2002	164 2039	506 2003	506 2016	5049 2001
BLOCK SODDING (SY)	DRILL SEEDING (PERM) (URBAN) (CLAY) (SY)	ROCK FILTER DAMS (INSTALL) (TY 3) (LF)	CONSTRUCTION EXITS (INSTALL) (TY 1) (SY)	BIODGRD EROSION CONTROL LOGS (8" DIA) (LF)
30	5658	90	0	235

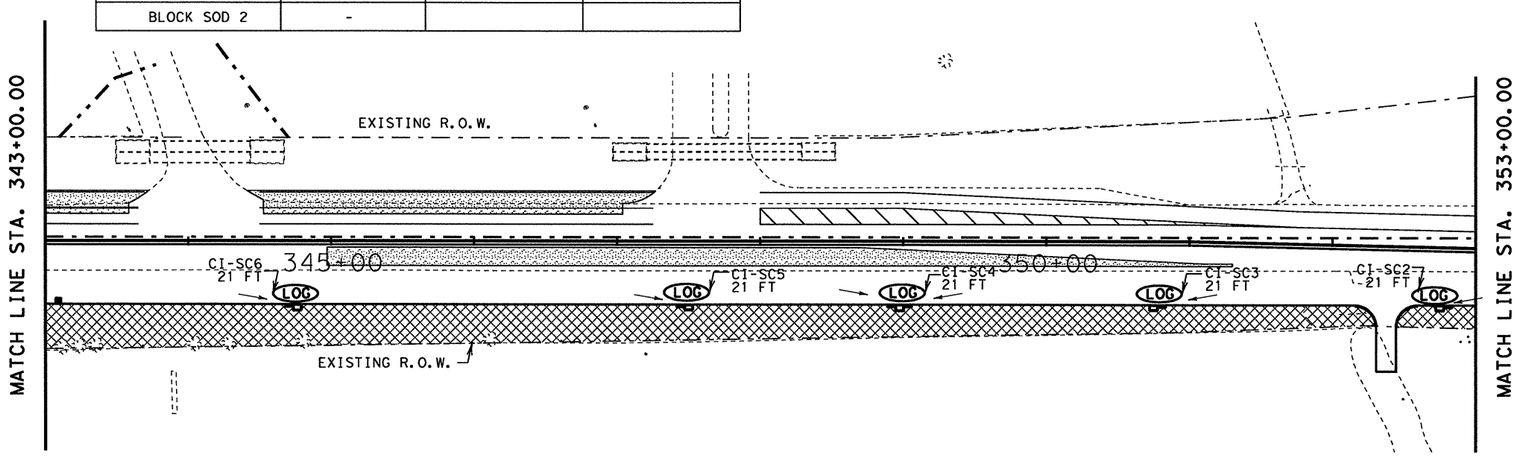

STATE OF TEXAS
NICHOLAS VON SPENCER
93702
LICENSED PROFESSIONAL ENGINEER

Nicholas V. Spencer, P.E. 5-25-11
Signature of Registrant & Date

Texas Department of Transportation
© 2011

SH 289
SW3P LAYOUT PHASE I

SCALE: 1"=100' SHEET 3 OF 12

DESIGN	FED. RD. DIV. NO.	STATE PROJECT NO.		HIGHWAY NO.
DF	6	(SEE TITLE SHEET)		SH 289
GRAPHICS DF	STATE	DISTRICT	COUNTY	SHEET NO.
CHECK NVS	TEXAS	DALLAS	COLLIN	459
CHECK NVS	CONTROL 0091	SECTION 04	JOB 055	

T:\DALDGN*A\SH 289 Collin\THE PLANS\SW3P\95% New SW3P sheets\Phase I\SW3P*phase I*4.dgn 5/25/2011 9:19:57 AM

1. SEE SW3P SUMMARY FOR SHEET TOTALS.
2. OVERALL SW3P INSTALLATION SHALL FOLLOW CONSTRUCTION SEQUENCE.
3. CURB INLET CONSTRUCTION WILL REQUIRE EROSION CONTROL LOG PLACEMENT IN SUB PHASES NOT SHOWN.
4. ROCK FILTER DAMS ARE PLACED IN THE PHASE SHOWN AND SHALL REMAIN UNTIL FINAL GRADING AND STABILIZATION.
5. CONSTRUCTIONS EXITS SHOWN CAN BE RELOCATED AS REQUIRED WITH APPROVAL OF THE ENGINEER.

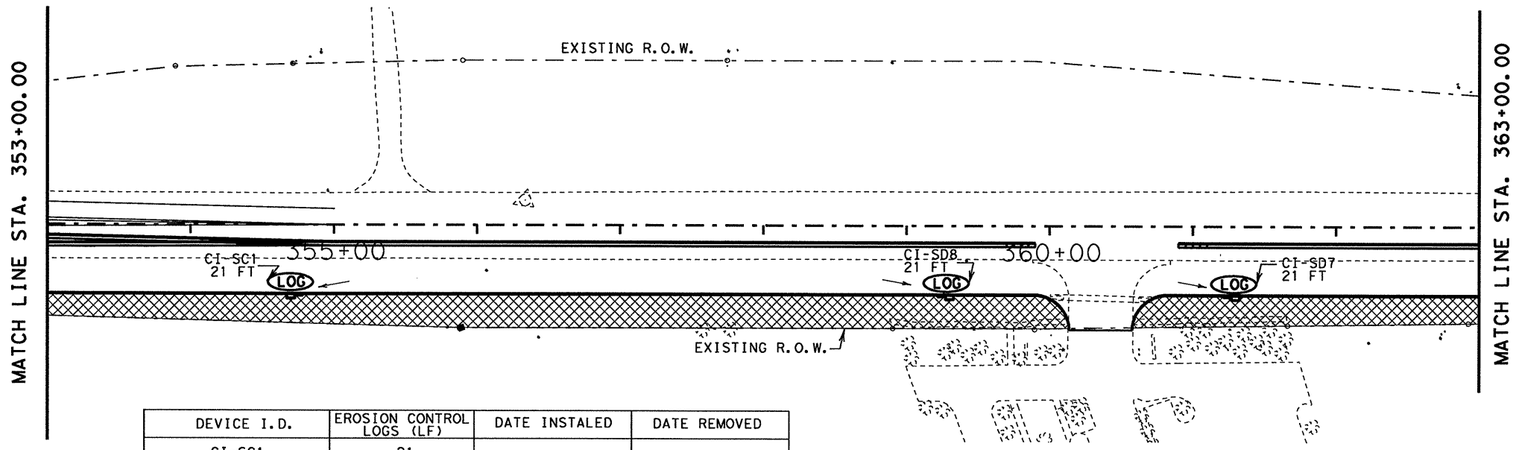

LEGEND:

- TEMPORARY ROCK FILTER DAMS TYPE 3 — RFD3
- SEEDING
- EROSION CONTROL LOG — LOG
- DIRECTION OF FLOW
- CONSTRUCTION EXIT
- BLOCK SOD

DEVICE I.D.	EROSION CONTROL LOGS (LF)	DATE INSTALED	DATE REMOVED
CI-SC1	21		
CI-SD8	21		
CI-SD7	21		
CI-SD6	21		
CI-SD5	21		
CI-SD4	21		
CI-SD3	21		
CI-SD2	21		
CI-SD1	21		

DATE DISTURBED	DATE STABILIZED

SHEET TOTALS				
162 2002	164 2039	506 2003	506 2016	5049 2001
BLOCK SODDING (SY)	DRILL SEEDING (PERM) (URBAN) (CLAY) (SY)	ROCK FILTER DAMS (INSTALL) (TY 3) (LF)	CONSTRUCTION EXITS (INSTALL) (TY 1) (SY)	BIODGRD EROSION CONTROL LOGS (8" DIA) (LF)
0	4510	0	0	189

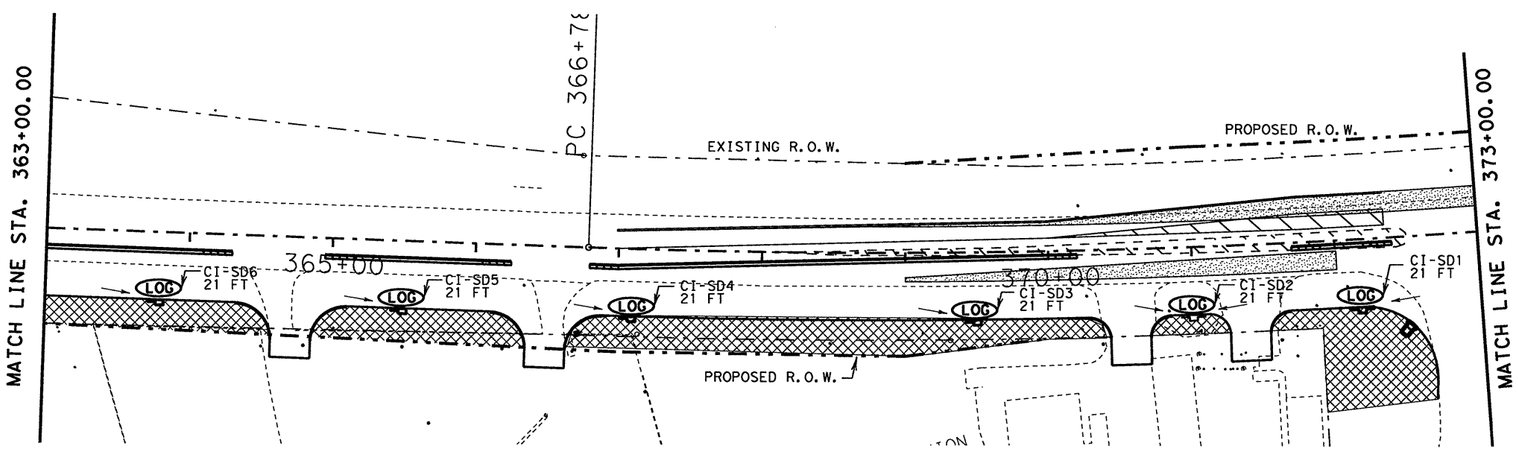

STATE OF TEXAS
NICHOLAS VON SPENCER
93702
LICENSED
PROFESSIONAL ENGINEER

Signature of Registrant & Date, P.E. 5-25-11

Texas Department of Transportation
© 2011

SH 289
SW3P LAYOUT PHASE I

SCALE: 1"=100'

SHEET 4 OF 12

DESIGN	FED. RD. DIV. NO.	STATE PROJECT NO.		HIGHWAY NO.
DF	6	(SEE TITLE SHEET)		SH 289
GRAPHICS DF	STATE	DISTRICT	COUNTY	SHEET NO.
CHECK NVS	TEXAS	DALLAS	COLLIN	460
CHECK NVS	CONTROL	SECTION	JOB	
	0091	04	055	

R-201104-01

T:\DALDGN*A\SH 289 Collin\THE PLANS\SW3P\95% New SW3P sheets\Phase I\SW3P*phaseI*5.dgn 5/25/2011 9:20:10 AM

DATE DISTURBED	DATE STABILIZED

1. SEE SW3P SUMMARY FOR SHEET TOTALS.
2. OVERALL SW3P INSTALLATION SHALL FOLLOW CONSTRUCTION SEQUENCE.
3. CURB INLET CONSTRUCTION WILL REQUIRE EROSION CONTROL LOG PLACEMENT IN SUB PHASES NOT SHOWN.
4. ROCK FILTER DAMS ARE PLACED IN THE PHASE SHOWN AND SHALL REMAIN UNTIL FINAL GRADING AND STABILIZATION.
5. CONSTRUCTIONS EXITS SHOWN CAN BE RELOCATED AS REQUIRED WITH APPROVAL OF THE ENGINEER.

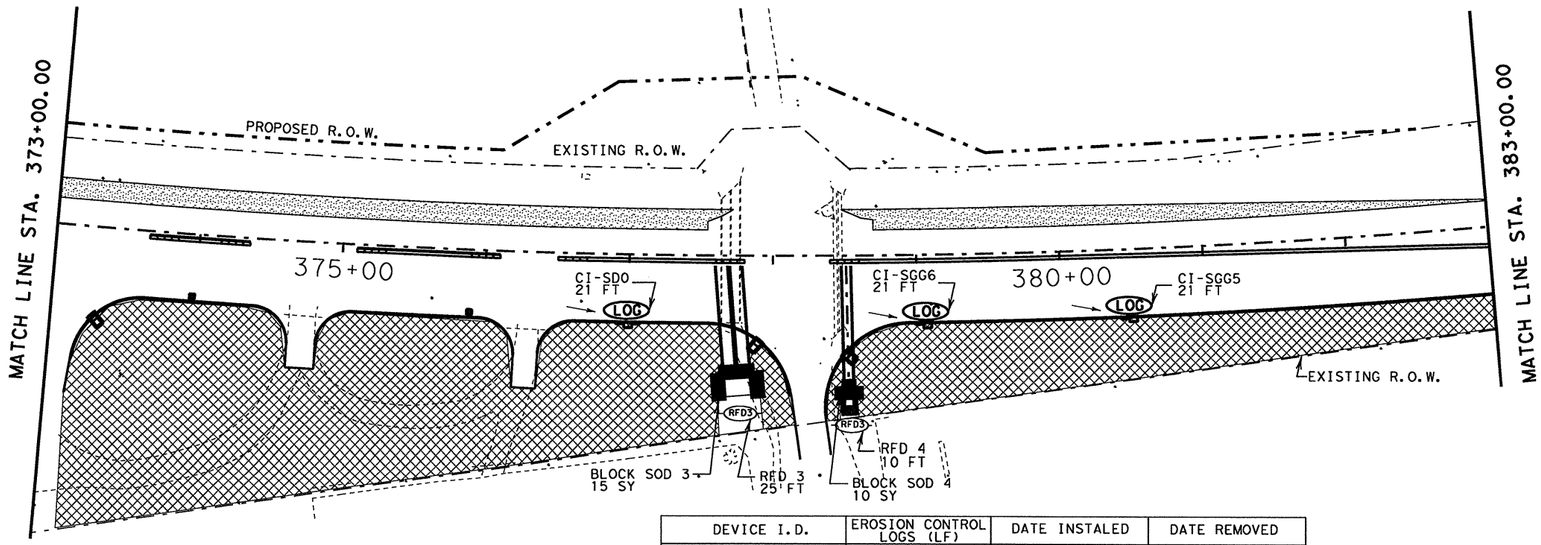

LEGEND:

TEMPORARY ROCK FILTER DAMS TYPE 3	RFD3
SEEDING	
EROSION CONTROL LOG	LOG
DIRECTION OF FLOW	
CONSTRUCTION EXIT	
BLOCK SOD	

SHEET TOTALS				
162 2002	164 2039	506 2003	506 2016	5049 2001
BLOCK SODDING (SY)	DRILL SEEDING (PERM) (URBAN) (CLAY) (SY)	ROCK FILTER DAMS (INSTALL) (TY 3) (LF)	CONSTRUCTION EXITS (INSTALL) (TY 1) (SY)	BIODGRD EROSION CONTROL LOGS (8" DIA) (LF)
50	9775	105	0	197

DEVICE I.D.	EROSION CONTROL LOGS (LF)	DATE INSTALED	DATE REMOVED
BLOCK SOD 3	-		
BLOCK SOD 4	-		
BLOCK SOD 5	-		

DEVICE I.D.	EROSION CONTROL LOGS (LF)	DATE INSTALED	DATE REMOVED
CI-SDO	21		
CI-SGG6	21		
CI-SGG5	21		
CI-SGG4	21		
CI-SGG3	21		
CI-SGG2	21		
CI-SGG1	21		
RFD 3	-		
RFD 4	-		
RFD 5	-		

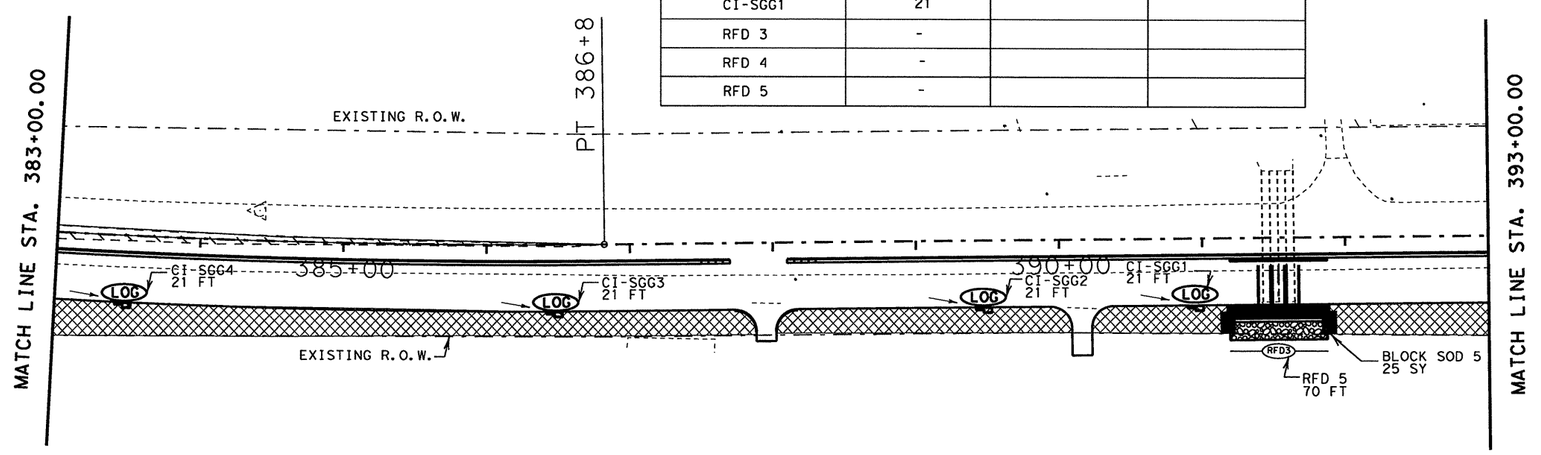

STATE OF TEXAS
NICHOLAS VON SPENCER
93702
LICENSED PROFESSIONAL ENGINEER

Signature of Registrant & Date, P.E. 5-25-11

Texas Department of Transportation
© 2011

SH 289
SW3P LAYOUT PHASE I

SCALE: 1"=100'

SHEET 5 OF 12

DESIGN	FED. RD. DIV. NO.	STATE PROJECT NO.		HIGHWAY NO.
DF	6	(SEE TITLE SHEET)		SH 289
GRAPHICS DF	STATE	DISTRICT	COUNTY	SHEET NO.
CHECK NVS	TEXAS	DALLAS	COLLIN	461
CHECK NVS	CONTROL 0091	SECTION 04	JOB 055	

T:\DALDGN*A\SH 289 Collin\THE PLANS\SW3P\95% New SW3P sheets\Phase I\SW3P*phaseI*6.dgn 5/25/2011 9:20:20 AM

1. SEE SW3P SUMMARY FOR SHEET TOTALS.
2. OVERALL SW3P INSTALLATION SHALL FOLLOW CONSTRUCTION SEQUENCE.
3. CURB INLET CONSTRUCTION WILL REQUIRE EROSION CONTROL LOG PLACEMENT IN SUB PHASES NOT SHOWN.
4. ROCK FILTER DAMS ARE PLACED IN THE PHASE SHOWN AND SHALL REMAIN UNTIL FINAL GRADING AND STABILIZATION.
5. CONSTRUCTIONS EXITS SHOWN CAN BE RELOCATED AS REQUIRED WITH APPROVAL OF THE ENGINEER.

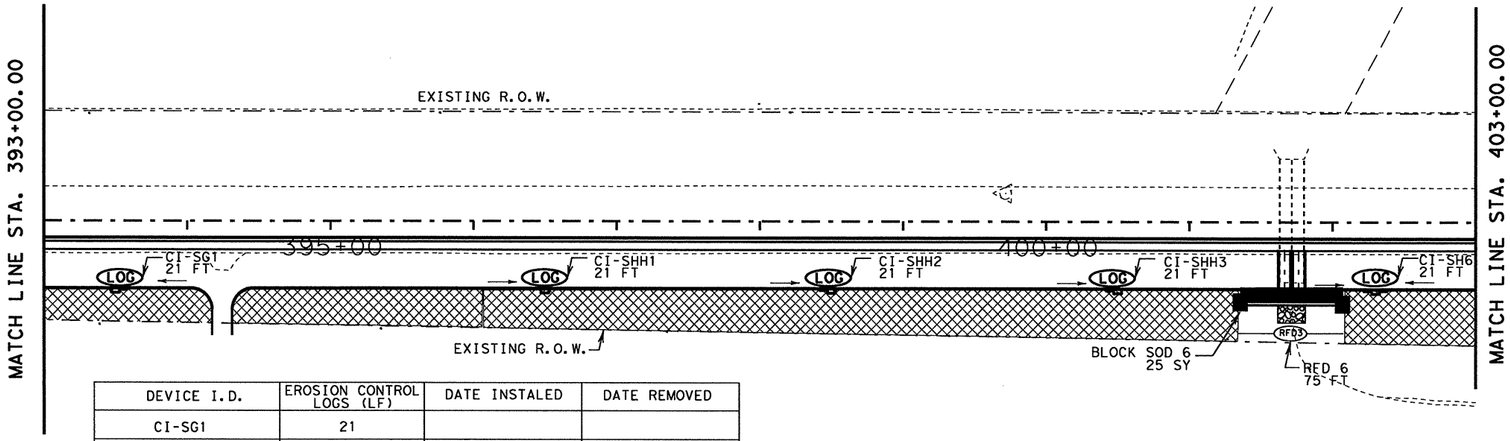

LEGEND:

TEMPORARY ROCK FILTER DAMS TYPE 3	RFD3
SEEDING	
EROSION CONTROL LOG	LOG
DIRECTION OF FLOW	
CONSTRUCTION EXIT	
BLOCK SOD	

DEVICE I.D.	EROSION CONTROL LOGS (LF)	DATE INSTALED	DATE REMOVED
CI-SG1	21		
CI-SHH1	21		
CI-SHH2	21		
CI-SHH3	21		
CI-SH6	21		
CI-SH5	21		
CI-SH4	21		
CI-SH3	21		
CI-SH2	21		
RFD 6	-		
BLOCK SOD 6	-		

DATE DISTURBED	DATE STABILIZED

SHEET TOTALS				
162 2002	164 2039	506 2003	506 2016	5049 2001
BLOCK SODDING (SY)	DRILL SEEDING (PERM) (URBAN) (CLAY) (SY)	ROCK FILTER DAMS (INSTALL) (TY 3) (LF)	CONSTRUCTION EXITS (INSTALL) (TY 1) (SY)	BIODGRD EROSION CONTROL LOGS (8" DIA) (LF)
25	7919	75	0	189

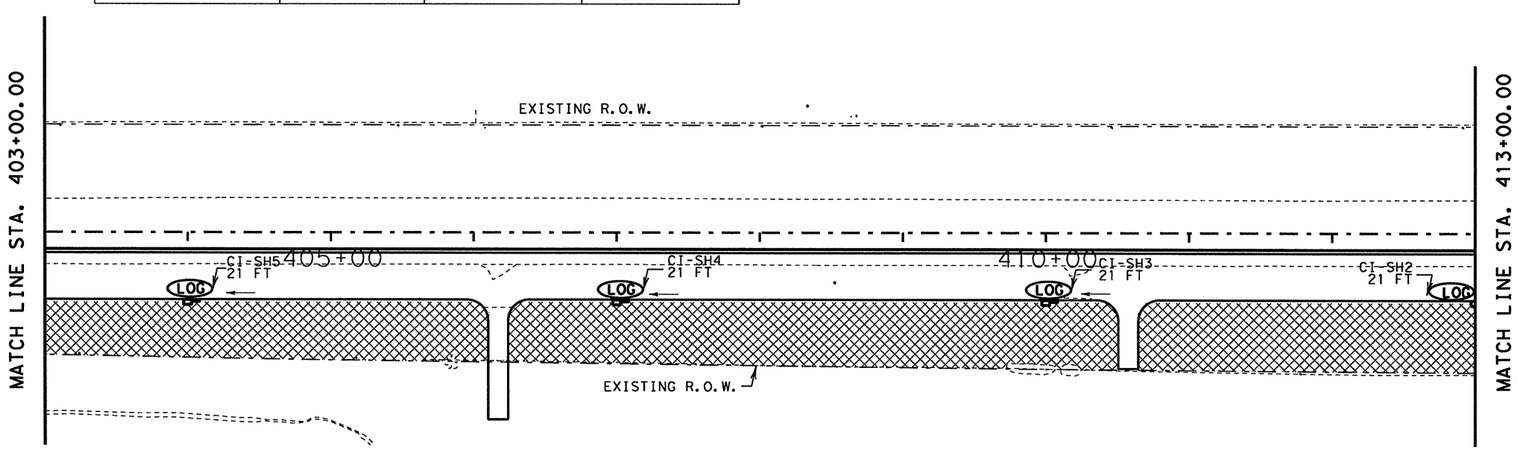

STATE OF TEXAS
NICHOLAS VON SPENCER
93702
LICENSED
PROFESSIONAL ENGINEER

Nicholas Von Spencer, P.E. 5-25-11
Signature of Registrant & Date

Texas Department of Transportation
© 2011

SH 289
SW3P LAYOUT PHASE I

SCALE: 1"=100' SHEET 6 OF 12

DESIGN	FED. RD. DIV. NO.	STATE PROJECT NO.		HIGHWAY NO.
DF	6	(SEE TITLE SHEET)		SH 289
GRAPHICS DF	STATE	DISTRICT	COUNTY	SHEET NO.
CHECK NVS	TEXAS	DALLAS	COLLIN	462
CHECK NVS	CONTROL	SECTION	JOB	
	0091	04	055	

5/25/2011 9:46:34 AM
T:\DALDGN*A\SH 289 Celina\THE PLANS\SW3P\95% New SW3P sheets\Phase I\SW3P*phaseI*7.dgn

1. SEE SW3P SUMMARY FOR SHEET TOTALS.
2. OVERALL SW3P INSTALLATION SHALL FOLLOW CONSTRUCTION SEQUENCE.
3. CURB INLET CONSTRUCTION WILL REQUIRE EROSION CONTROL LOG PLACEMENT IN SUB PHASES NOT SHOWN.
4. ROCK FILTER DAMS ARE PLACED IN THE PHASE SHOWN AND SHALL REMAIN UNTIL FINAL GRADING AND STABILIZATION.
5. CONSTRUCTIONS EXITS SHOWN CAN BE RELOCATED AS REQUIRED WITH APPROVAL OF THE ENGINEER.

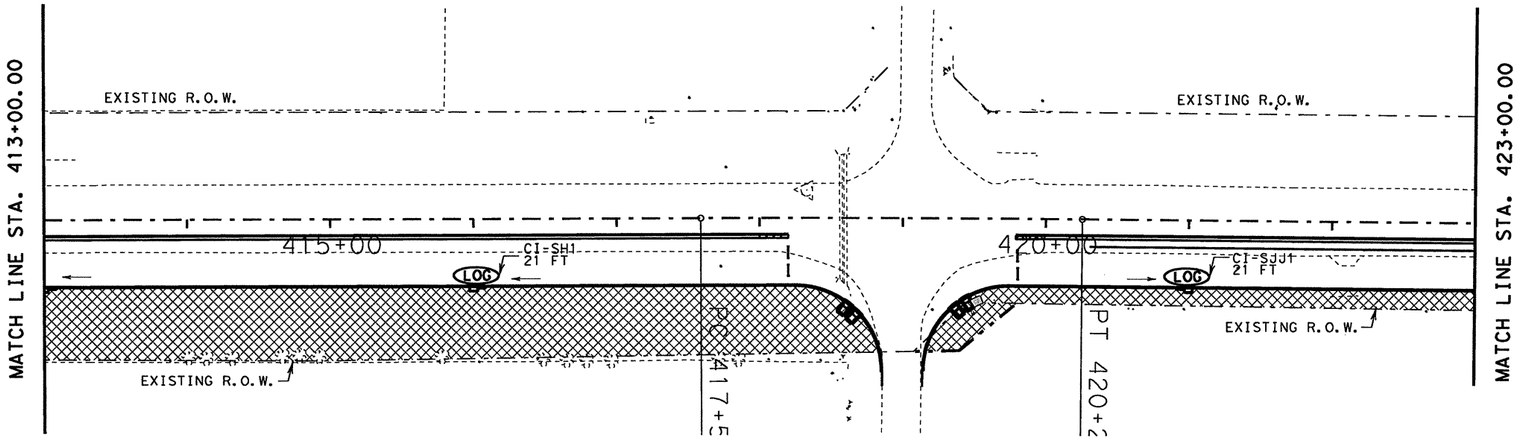

LEGEND:

TEMPORARY ROCK FILTER DAMS TYPE 3	RFD3
SEEDING	
EROSION CONTROL LOG	LOG
DIRECTION OF FLOW	
CONSTRUCTION EXIT	
BLOCK SOD	

DEVICE I.D.	EROSION CONTROL LOGS (LF)	DATE INSTALED	DATE REMOVED
CI-SH1	21		
CI-SJJ1	21		
CI-SJJ2	21		
CI-SJJ3	21		
CI-SJJ4	21		
CI-SJJ5	21		

DATE DISTURBED	DATE STABILIZED

SHEET TOTALS			
164 2039	506 2003	506 2016	5049 2001
DRILL SEEDING (PERM) (URBAN) (CLAY) (SY)	ROCK FILTER DAMS (INSTALL) (TY 3) (LF)	CONSTRUCTION EXITS (INSTALL) (TY 1) (SY)	BIODGRD EROSION CONTROL LOGS (8" DIA) (LF)
6275	0	0	126

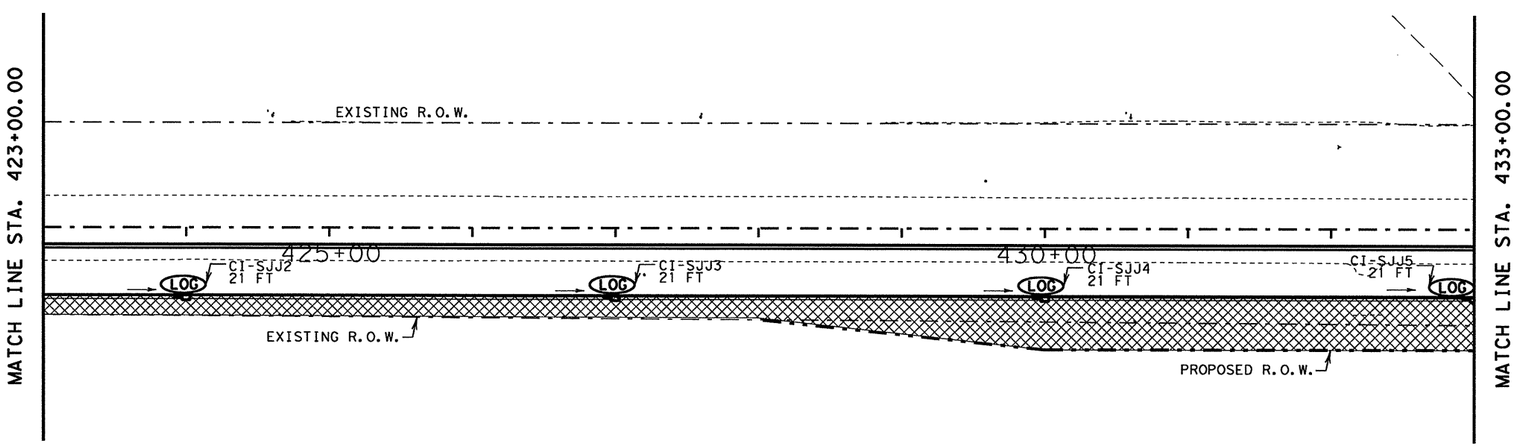

STATE OF TEXAS
NICHOLAS VON SPENCER
93702
LICENSED
PROFESSIONAL ENGINEER

Signature of Registrant & Date, P.E. 5-25-11

Texas Department of Transportation
© 2011

SH 289
SW3P LAYOUT PHASE I

SCALE: 1"=100'

SHEET 7 OF 12

DESIGN	FED. RD. DIV. NO.	STATE PROJECT NO.		HIGHWAY NO.
DF	6	(SEE TITLE SHEET)		SH 289
GRAPHICS DF	STATE	DISTRICT	COUNTY	SHEET NO.
CHECK NVS	TEXAS	DALLAS	COLLIN	463
CHECK NVS	CONTROL	SECTION	JOB	
	0091	04	055	

R-201104-01

1. SEE SW3P SUMMARY FOR SHEET TOTALS.
2. OVERALL SW3P INSTALLATION SHALL FOLLOW CONSTRUCTION SEQUENCE.
3. CURB INLET CONSTRUCTION WILL REQUIRE EROSION CONTROL LOG PLACEMENT IN SUB PHASES NOT SHOWN.
4. ROCK FILTER DAMS ARE PLACED IN THE PHASE SHOWN AND SHALL REMAIN UNTIL FINAL GRADING AND STABILIZATION.
5. CONSTRUCTIONS EXITS SHOWN CAN BE RELOCATED AS REQUIRED WITH APPROVAL OF THE ENGINEER.

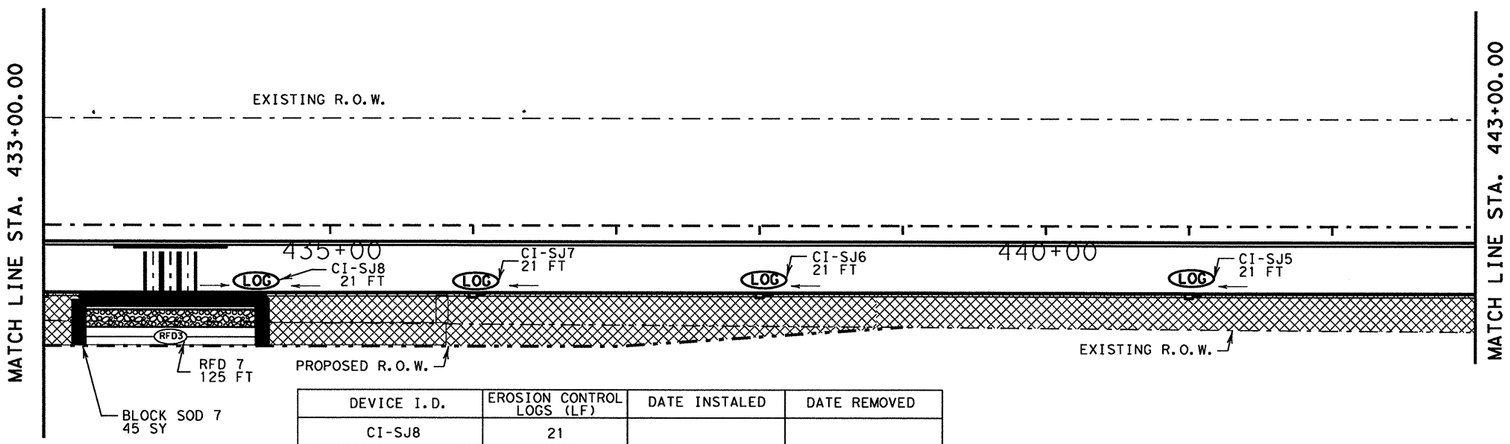

DEVICE I.D.	EROSION CONTROL LOGS (LF)	DATE INSTALED	DATE REMOVED
CI-SJ8	21		
CI-SJ7	21		
CI-SJ6	21		
CI-SJ5	21		
CI-SJ4	21		
CI-SJ3	21		
CI-SJ2	21		
CI-SJ1	21		
RFD 7	-		
BLOCK SOD 7	-		

DATE DISTURBED	DATE STABILIZED

LEGEND:

TEMPORARY ROCK FILTER DAMS TYPE 3 — RFD3

SEEDING

EROSION CONTROL LOG — LOG

DIRECTION OF FLOW

CONSTRUCTION EXIT

BLOCK SOD

SHEET TOTALS				
162 2002	164 2039	506 2003	506 2016	5049 2001
BLOCK SODDING (SY)	DRILL SEEDING (PERM) (URBAN) (CLAY) (SY)	ROCK FILTER DAMS (INSTALL) (TY 3) (LF)	CONSTRUCTION EXITS (INSTALL) (TY 1) (SY)	BIODGRD EROSION CONTROL LOGS (8" DIA) (LF)
45	6212	125	0	168

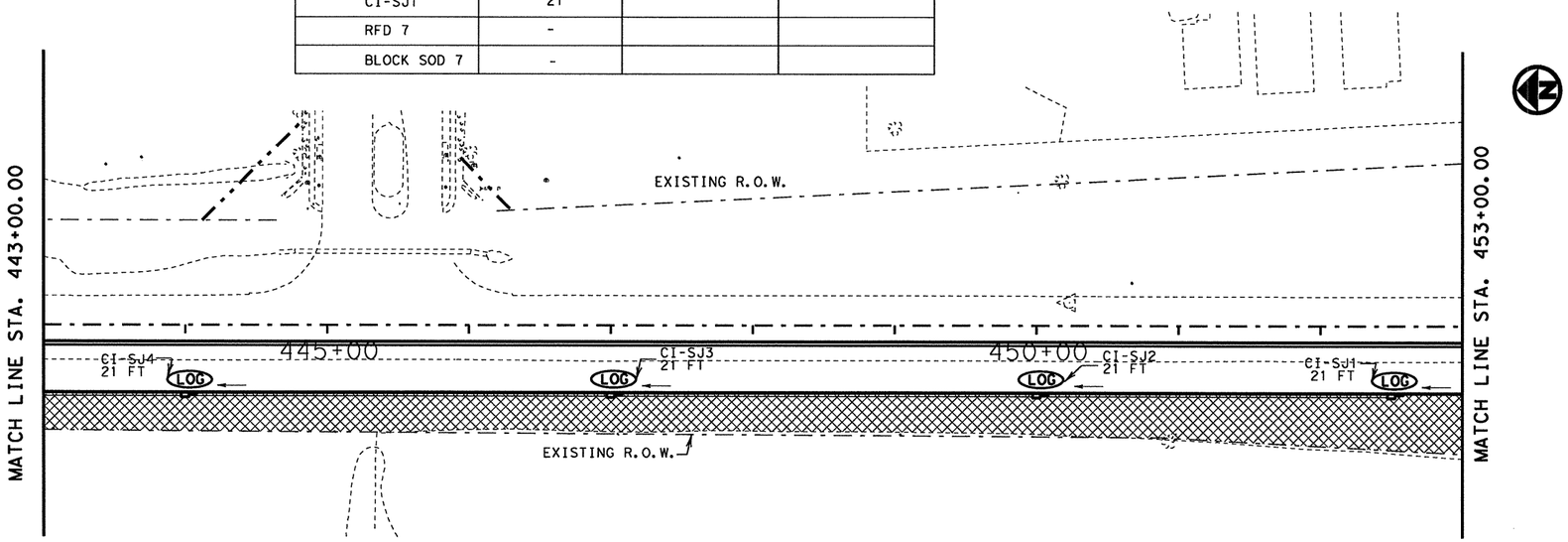

STATE OF TEXAS
NICHOLAS VON SPENCER
93702
LICENSED PROFESSIONAL ENGINEER

Nicholas V Spencer, P.E. 5-25-11
Signature of Registrant & Date

Texas Department of Transportation
© 2011

SH 289
SW3P LAYOUT PHASE I

SCALE: 1"=100'

SHEET 8 OF 12

DESIGN	FED. RD. DIV. NO.	STATE PROJECT NO.		HIGHWAY NO.
DF	6	(SEE TITLE SHEET)		SH 289
GRAPHICS DF	STATE	DISTRICT	COUNTY	SHEET NO.
CHECK NVS	TEXAS	DALLAS	COLLIN	464
CHECK NVS	CONTROL	SECTION	JOB	
	0091	04	055	

T:\DALDGN*A\SH 289 Celina\THE PLANS\SW3P\95% New SW3P sheets\Phase I\SW3P*phaseI*8.dgn 5/25/2011 9:46:48 AM

R-201104-01

T:\DALDGN*A\SH 289 Celina\THE PLANS\SW3P\95% New SW3P sheets\Phase I\SW3P*phaseI*9.dgn 5/25/2011 9:47:00 AM

1. SEE SW3P SUMMARY FOR SHEET TOTALS.
2. OVERALL SW3P INSTALLATION SHALL FOLLOW CONSTRUCTION SEQUENCE.
3. CURB INLET CONSTRUCTION WILL REQUIRE EROSION CONTROL LOG PLACEMENT IN SUB PHASES NOT SHOWN.
4. ROCK FILTER DAMS ARE PLACED IN THE PHASE SHOWN AND SHALL REMAIN UNTIL FINAL GRADING AND STABILIZATION.
5. CONSTRUCTIONS EXITS SHOWN CAN BE RELOCATED AS REQUIRED WITH APPROVAL OF THE ENGINEER.

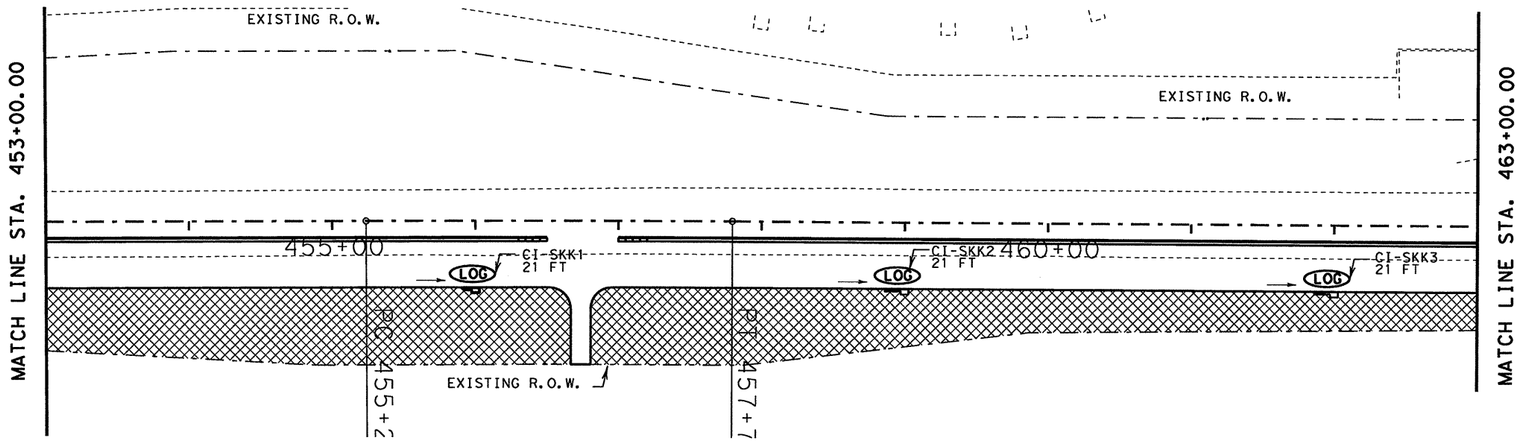

LEGEND:

TEMPORARY ROCK FILTER DAMS TYPE 3	RFD3
SEEDING	
EROSION CONTROL LOG	LOG
DIRECTION OF FLOW	
CONSTRUCTION EXIT	
BLOCK SOD	

DATE DISTURBED	DATE STABILIZED

DEVICE I.D.	EROSION CONTROL LOGS (LF)	DATE INSTALED	DATE REMOVED
CI-SKK1	21		
CI-SKK2	21		
CI-SKK3	21		
CI-SKK4	21		
CI-SKK5	21		
CI-SKK6	21		
CI-SK3	21		
RFD 8	-		
BLOCK SOD 8	-		

SHEET TOTALS				
162 2002	164 2039	506 2003	506 2016	5049 2001
BLOCK SODDING (SY)	DRILL SEEDING (PERM) (URBAN) (CLAY) (SY)	ROCK FILTER DAMS (INSTALL) (TY 3) (LF)	CONSTRUCTION EXITS (INSTALL) (TY 1) (SY)	BIODGRD EROSION CONTROL LOGS (8" DIA) (LF)
25	7095	90	0	147

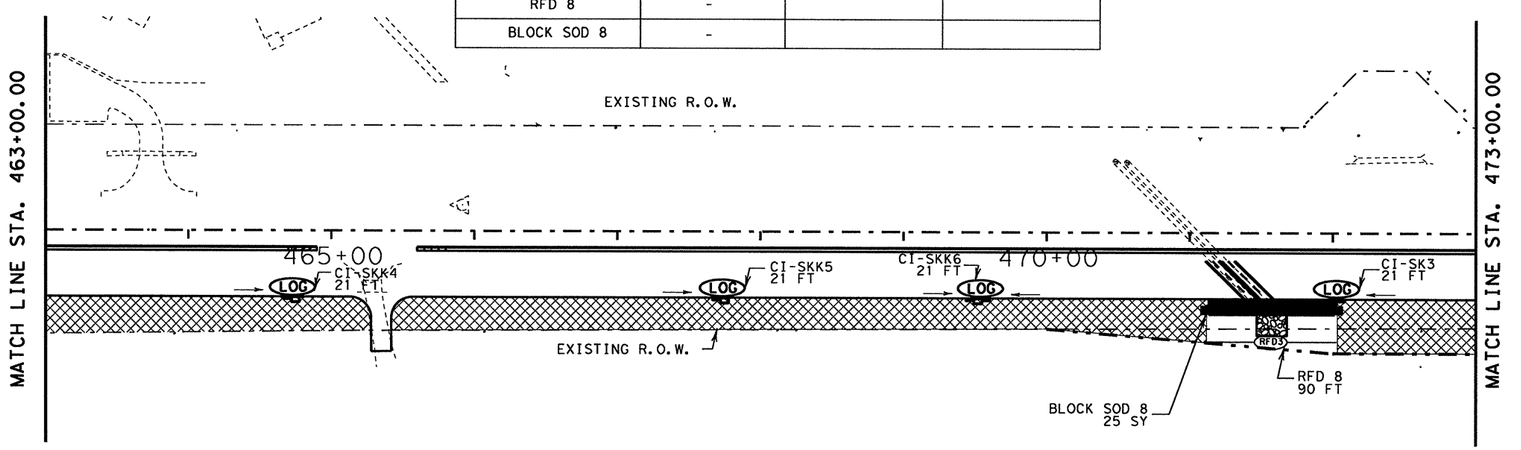

STATE OF TEXAS
NICHOLAS VON SPENCER
93702
LICENSED
PROFESSIONAL ENGINEER

Signature of Registrant & Date, P.E. 5-25-11

Texas Department of Transportation
© 2011

SH 289
SW3P LAYOUT PHASE I

SCALE: 1"=100'

SHEET 9 OF 12

DESIGN	FED. RD. DIV. NO.	STATE PROJECT NO.		HIGHWAY NO.
DF	6	(SEE TITLE SHEET)		SH 289
GRAPHICS DF	STATE	DISTRICT	COUNTY	SHEET NO.
CHECK NVS	TEXAS	DALLAS	COLLIN	465
CHECK NVS	CONTROL	SECTION	JOB	
	0091	04	055	

R-201104-01

5/25/2011 9:47:13 AM
T:\DALDGN*A\SH 289 Collin\THE PLANS\SW3P\95% New SW3P sheets\Phase I\SW3P*phaseI*10.dgn

1. SEE SW3P SUMMARY FOR SHEET TOTALS.
2. OVERALL SW3P INSTALLATION SHALL FOLLOW CONSTRUCTION SEQUENCE.
3. CURB INLET CONSTRUCTION WILL REQUIRE EROSION CONTROL LOG PLACEMENT IN SUB PHASES NOT SHOWN.
4. ROCK FILTER DAMS ARE PLACED IN THE PHASE SHOWN AND SHALL REMAIN UNTIL FINAL GRADING AND STABILIZATION.
5. CONSTRUCTIONS EXITS SHOWN CAN BE RELOCATED AS REQUIRED WITH APPROVAL OF THE ENGINEER.

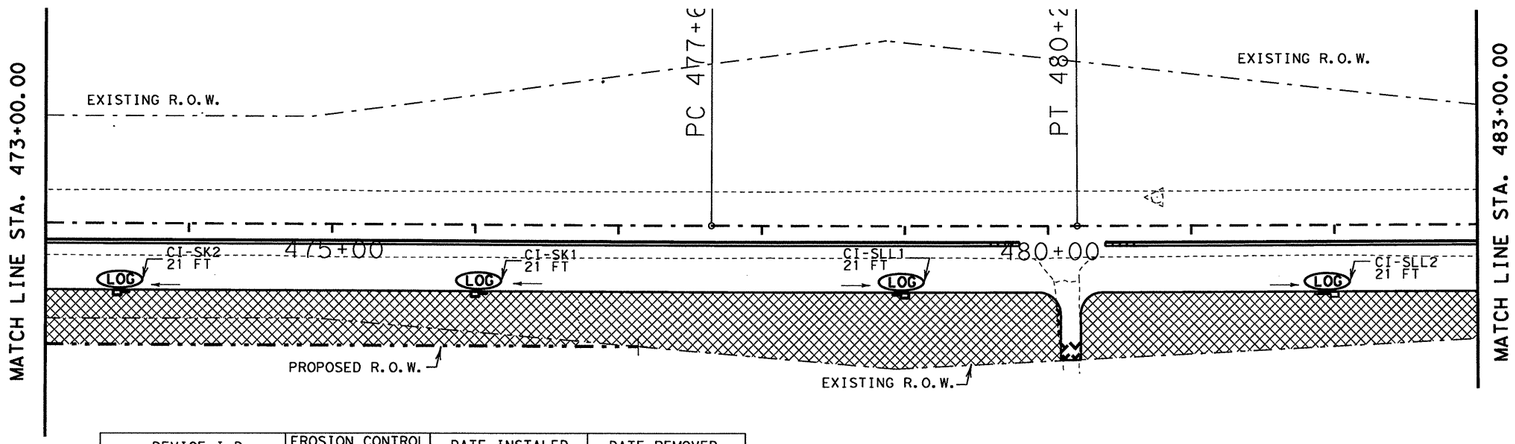

LEGEND:

TEMPORARY ROCK FILTER DAMS TYPE 3	RFD3
SEEDING	
EROSION CONTROL LOG	LOG
DIRECTION OF FLOW	
CONSTRUCTION EXIT	
BLOCK SOD	

DEVICE I.D.	EROSION CONTROL LOGS (LF)	DATE INSTALED	DATE REMOVED
CI-SK2	21		
CI-SK1	21		
CI-SLL1	21		
CI-SLL2	21		
CI-SLL3	21		
CI-SLL4	21		
CI-SLL5	21		
CI-SLL6	21		

DATE DISTURBED	DATE STABILIZED

SHEET TOTALS				
162 2002	164 2039	506 2003	506 2016	5049 2001
BLOCK SODDING (SY)	DRILL SEEDING (PERM) (URBAN) (CLAY) (SY)	ROCK FILTER DAMS (INSTALL) (TY 3) (LF)	CONSTRUCTION EXITS (INSTALL) (TY 1) (SY)	BIODGRD EROSION CONTROL LOGS (8" DIA) (LF)
0	8136	0	0	168

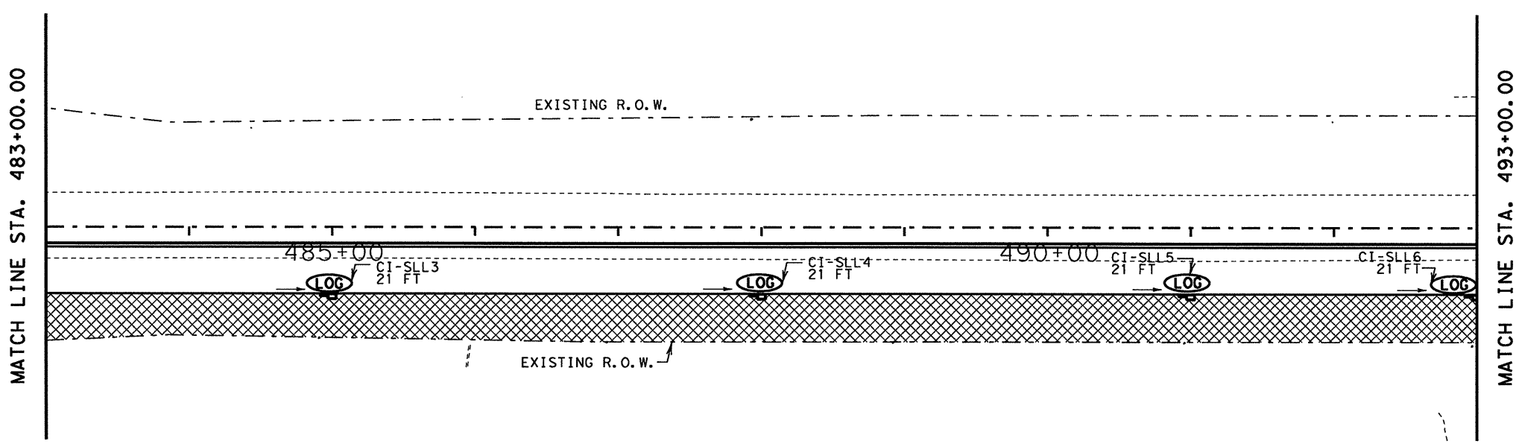

STATE OF TEXAS
NICHOLAS VON SPENCER
93702
LICENSED
PROFESSIONAL ENGINEER

Signature of Registrant & Date, P.E. 5-25-11

Texas Department of Transportation
© 2011

SH 289
SW3P LAYOUT PHASE I

SCALE: 1"=100'

SHEET 10 OF 12

DESIGN	FED. RD. DIV. NO.	STATE PROJECT NO.		HIGHWAY NO.
DF	6	(SEE TITLE SHEET)		SH 289
GRAPHICS DF	STATE	DISTRICT	COUNTY	SHEET NO.
CHECK NVS	TEXAS	DALLAS	COLLIN	466
	CONTROL	SECTION	JOB	
CHECK NVS	0091	04	055	

T:\DALDGN*A\SH 289 Collin\THE PLANS\SW3P\95% New SW3P sheets\Phase I\SW3P*phase I*11.dgn 5/25/2011 9:47:24 AM

1. SEE SW3P SUMMARY FOR SHEET TOTALS.
2. OVERALL SW3P INSTALLATION SHALL FOLLOW CONSTRUCTION SEQUENCE.
3. CURB INLET CONSTRUCTION WILL REQUIRE EROSION CONTROL LOG PLACEMENT IN SUB PHASES NOT SHOWN.
4. ROCK FILTER DAMS ARE PLACED IN THE PHASE SHOWN AND SHALL REMAIN UNTIL FINAL GRADING AND STABILIZATION.
5. CONSTRUCTIONS EXITS SHOWN CAN BE RELOCATED AS REQUIRED WITH APPROVAL OF THE ENGINEER.

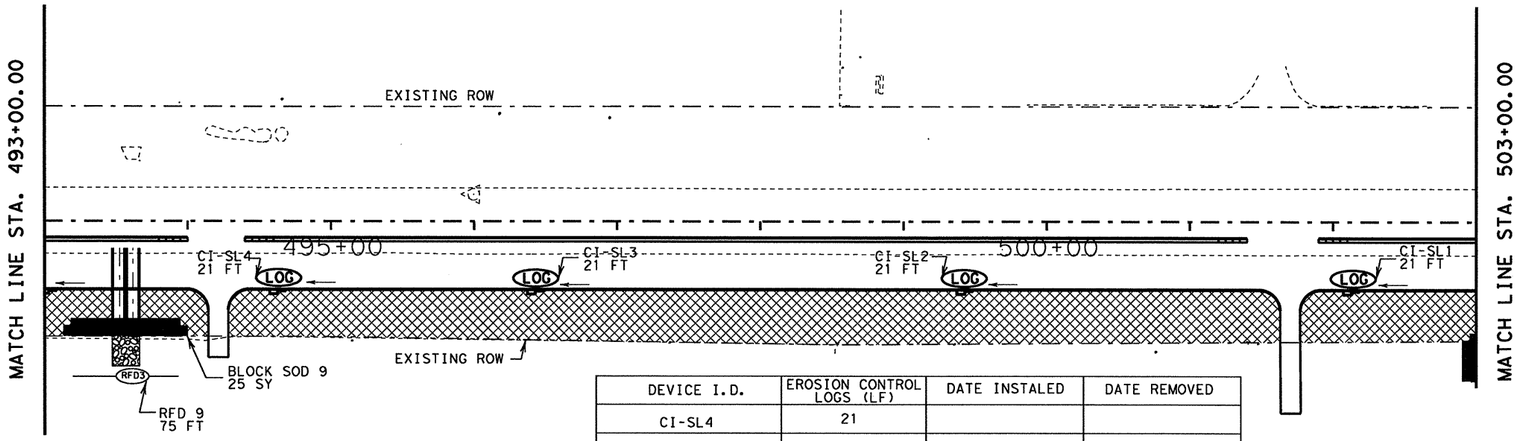

LEGEND:

TEMPORARY ROCK FILTER DAMS TYPE 3	RFD3
SEEDING	
EROSION CONTROL LOG	LOG
DIRECTION OF FLOW	
CONSTRUCTION EXIT	
BLOCK SOD	

DEVICE I.D.	EROSION CONTROL LOGS (LF)	DATE INSTALED	DATE REMOVED
CI-SL4	21		
CI-SL3	21		
CI-SL2	21		
CI-SL1	21		
CI-SM6	21		
CI-SM5	21		
CI-SM4	21		
CI-SM3	21		
RFD 9	-		
RFD 10	-		
BLOCK SOD 9	-		
BLOCK SOD 10	-		

DATE DISTURBED	DATE STABILIZED

SHEET TOTALS

162 2002	164 2039	506 2003	506 2016	5049 2001
BLOCK SODDING (SY)	DRILL SEEDING (PERM) (URBAN) (CLAY) (SY)	ROCK FILTER DAMS (INSTALL) (TY 3) (LF)	CONSTRUCTION EXITS (INSTALL) (TY 1) (SY)	BIODGRD EROSION CONTROL LOGS (8" DIA) (LF)
65	7702	195	0	168

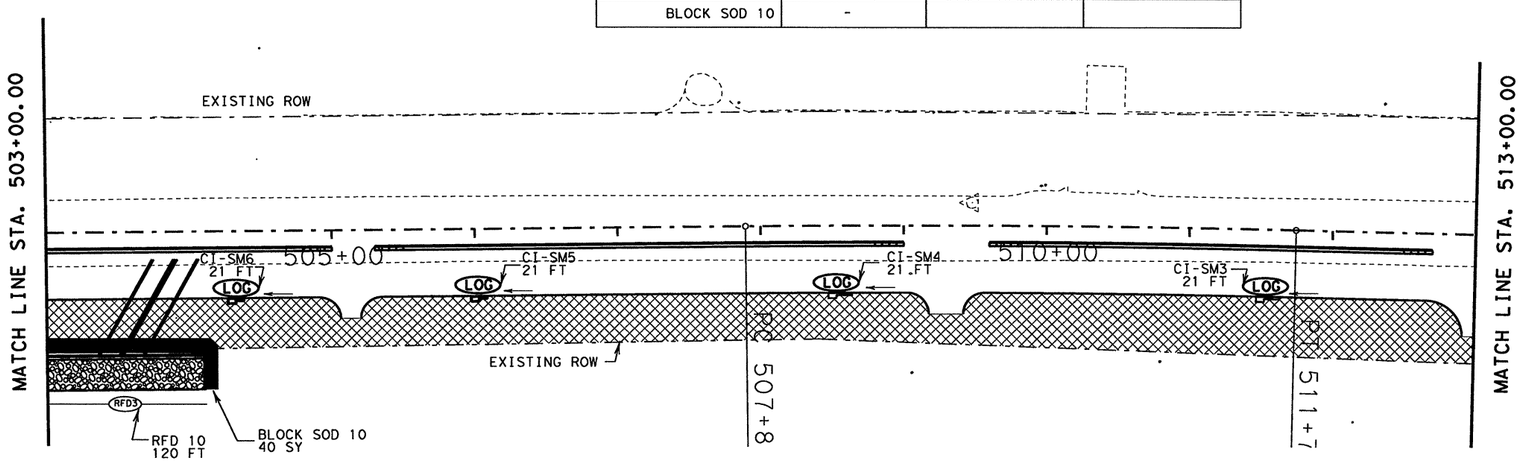

STATE OF TEXAS
NICHOLAS VON SPENCER
93702
LICENSED
PROFESSIONAL ENGINEER

Signature of Registrant & Date, P.E. 5-25-11

Texas Department of Transportation
© 2011

SH 289
SW3P LAYOUT PHASE I

SCALE: 1"=100'

SHEET 11 OF 12

DESIGN	FED. RD. DIV. NO.	STATE PROJECT NO.		HIGHWAY NO.
DF	6	(SEE TITLE SHEET)		SH 289
GRAPHICS DF	STATE	DISTRICT	COUNTY	SHEET NO.
CHECK NVS	TEXAS	DALLAS	COLLIN	467
CHECK NVS	CONTROL	SECTION	JOB	
	0091	04	055	

R-201104-01

5/25/2011 9:47:36 AM

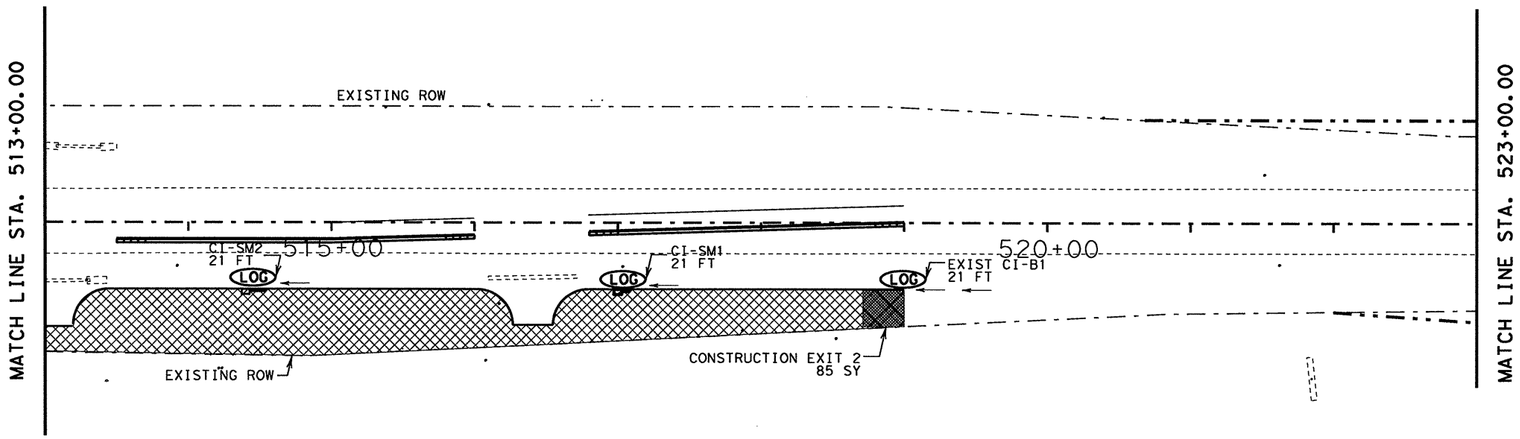

1. SEE SW3P SUMMARY FOR SHEET TOTALS.
2. OVERALL SW3P INSTALLATION SHALL FOLLOW CONSTRUCTION SEQUENCE.
3. CURB INLET CONSTRUCTION WILL REQUIRE EROSION CONTROL LOG PLACEMENT IN SUB PHASES NOT SHOWN.
4. ROCK FILTER DAMS ARE PLACED IN THE PHASE SHOWN AND SHALL REMAIN UNTIL FINAL GRADING AND STABILIZATION.
5. CONSTRUCTIONS EXITS SHOWN CAN BE RELOCATED AS REQUIRED WITH APPROVAL OF THE ENGINEER.

LEGEND:

- TEMPORARY ROCK FILTER DAMS TYPE 3 — RFD3
- SEEDING
- EROSION CONTROL LOG — LOG
- DIRECTION OF FLOW
- CONSTRUCTION EXIT
- BLOCK SOD

SHEET TOTALS		
164 2039	506 2016	5049 2001
DRILL SEEDING (PERM) (URBAN) (CLAY) (SY)	CONSTRUCTION EXITS (INSTALL) (TY 1) (SY)	BIODGRD EROSION CONTROL LOGS (8" DIA) (LF)
2433	85	63

DEVICE I.D.	EROSION CONTROL LOGS (LF)	DATE INSTALED	DATE REMOVED
CI-SM2	21		
CI-SM1	21		
EXIST CI-B1	21		
CONSTRUCTION EXIT 2	-		

DATE DISTURBED	DATE STABILIZED

STATE OF TEXAS
NICHOLAS VON SPENCER
93702
LICENSED PROFESSIONAL ENGINEER

Signature of Registrant & Date, P.E. 5-25-11

Texas Department of Transportation
© 2011

SH 289
SW3P LAYOUT PHASE I

SCALE: 1"=100'

SHEET 12 OF 12

DESIGN	FED. RD. DIV. NO.	STATE PROJECT NO.		HIGHWAY NO.
DF	6	(SEE TITLE SHEET)		SH 289
GRAPHICS DF	STATE	DISTRICT	COUNTY	SHEET NO.
CHECK NVS	TEXAS	DALLAS	COLLIN	468
CHECK NVS	CONTROL	SECTION	JOB	
	0091	04	055	

T:\DALDGN*A\SH 289 Celina\THE PLANS\SW3P\95% New SW3P sheets\Phase I\SW3P*phaseI*12.dgn

T:\DALDGN*A\SH 289 Collin\THE PLANS\SW3P\95% New SW3P sheets\Phase II\SW3P*phaseII*1.dgn 5/25/2011 10:18:58 AM

1. SEE SW3P SUMMARY FOR SHEET TOTALS.
2. OVERALL SW3P INSTALLATION SHALL FOLLOW CONSTRUCTION SEQUENCE.
3. CURB INLET CONSTRUCTION WILL REQUIRE EROSION CONTROL LOG PLACEMENT IN SUB PHASES NOT SHOWN.
4. ROCK FILTER DAMS ARE PLACED IN THE PHASE SHOWN AND SHALL REMAIN UNTIL FINAL GRADING AND STABILIZATION.
5. CONSTRUCTIONS EXITS SHOWN CAN BE RELOCATED AS REQUIRED WITH APPROVAL OF THE ENGINEER.

LEGEND:

- TEMPORARY ROCK FILTER DAMS TYPE 3 — RFD3
- SEEDING
- EROSION CONTROL LOG — LOG
- DIRECTION OF FLOW
- CONSTRUCTION EXIT
- BLOCK SOD

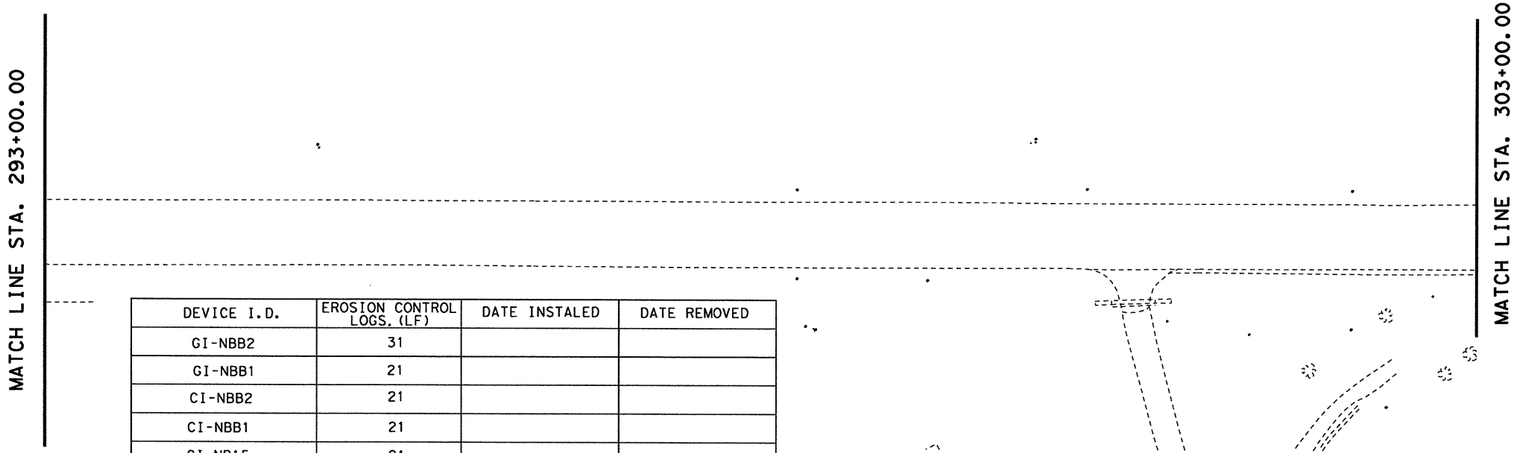

DEVICE I.D.	EROSION CONTROL LOGS. (LF)	DATE INSTALED	DATE REMOVED
GI-NBB2	31		
GI-NBB1	21		
CI-NBB2	21		
CI-NBB1	21		
CI-NB15	21		
CI-NB14	21		
CI-NB13	21		
CI-NB12	21		
CI-NB11	21		
CI-NB10	21		
CI-NB9	21		
RFD 11	-		
BLOCK SOD 11	-		
CONSTRUCTION EXIT 3	-		

DATE DISTURBED	DATE STABILIZED

SHEET TOTALS				
162 2002	164 2039	506 2003	506 2016	5049 2001
BLOCK SODDING (SY)	DRILL SEEDING (PERM) (URBAN) (CLAY) (SY)	ROCK FILTER DAMS (INSTALL) (TY 3) (LF)	CONSTRUCTION EXITS (INSTALL) (TY 1) (SY)	BIODGRD EROSION CONTROL LOGS (8" DIA) (LF)
40	5331	110	257	241

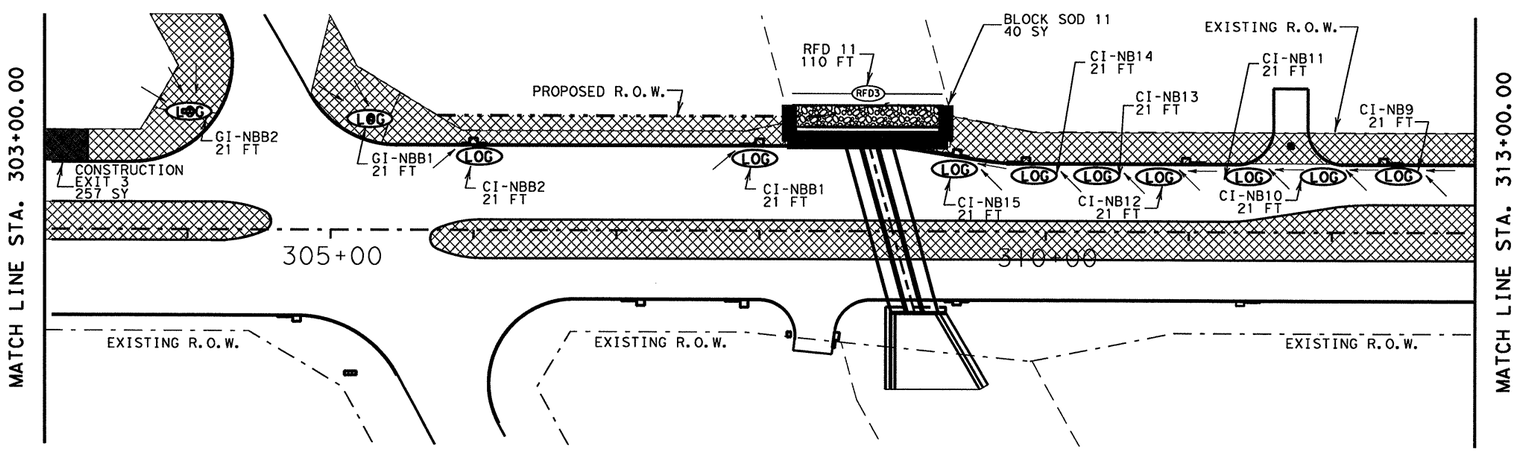

STATE OF TEXAS
NICHOLAS VON SPENCER
93702
LICENSED PROFESSIONAL ENGINEER

Signature of Registrant & Date, P.E. 5-25-11

Texas Department of Transportation
© 2011

SH 289
SW3P LAYOUT PHASE II

SCALE: 1"=100'

SHEET 1 OF 12

DESIGN	FED. RD. DIV. NO.	STATE PROJECT NO.		HIGHWAY NO.
DF	6	(SEE TITLE SHEET)		SH 289
GRAPHICS DF	STATE	DISTRICT	COUNTY	SHEET NO.
CHECK NVS	TEXAS	DALLAS	COLLIN	469
CHECK NVS	CONTROL 0091	SECTION 04	JOB 055	

DATE DISTURBED	DATE STABILIZED

1. SEE SW3P SUMMARY FOR SHEET TOTALS.
2. OVERALL SW3P INSTALLATION SHALL FOLLOW CONSTRUCTION SEQUENCE.
3. CURB INLET CONSTRUCTION WILL REQUIRE EROSION CONTROL LOG PLACEMENT IN SUB PHASES NOT SHOWN.
4. ROCK FILTER DAMS ARE PLACED IN THE PHASE SHOWN AND SHALL REMAIN UNTIL FINAL GRADING AND STABILIZATION.
5. CONSTRUCTIONS EXITS SHOWN CAN BE RELOCATED AS REQUIRED WITH APPROVAL OF THE ENGINEER.

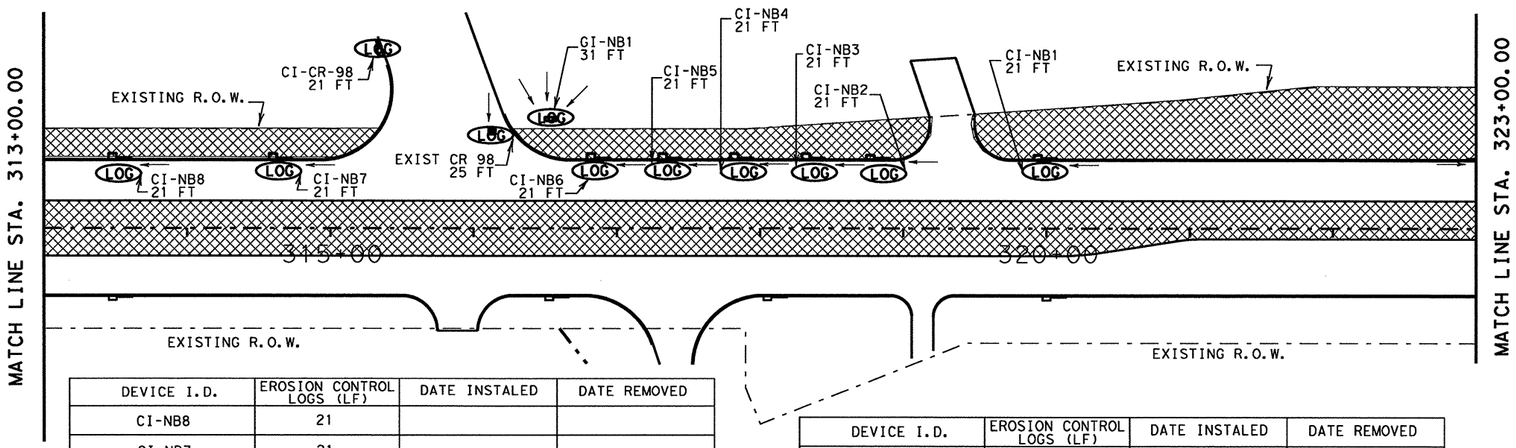

DEVICE I.D.	EROSION CONTROL LOGS (LF)	DATE INSTALED	DATE REMOVED
CI-NB8	21		
CI-NB7	21		
CI-CR-98	21		
EXIST CR 98	25		
GI-NB1	31		
CI-NB6	21		
CI-NB5	21		
CI-NB4	21		
CI-NB3	21		
CI-NB2	21		
CI-NB1	21		

DEVICE I.D.	EROSION CONTROL LOGS (LF)	DATE INSTALED	DATE REMOVED
CI-NCC1	21		
CI-NCC2	21		
CI-NCC3	21		
CI-NCC4	21		
CI-NCC5	21		
CI-NCC6	21		
CI-NCC7	21		
CI-NCC8	21		
GI-NCC1A	25		
CI-NCC9	21		
CI-NCC10	21		

LEGEND:

TEMPORARY ROCK FILTER DAMS TYPE 3	RFD3
SEEDING	
EROSION CONTROL LOG	LOG
DIRECTION OF FLOW	
CONSTRUCTION EXIT	
BLOCK SOD	

SHEET TOTALS	
164	5049
2039	2001
DRILL SEEDING (PERM) (URBAN) (CLAY) (SY)	BIODGRD EROSION CONTROL LOGS (8" DIA) (LF)
10100	480

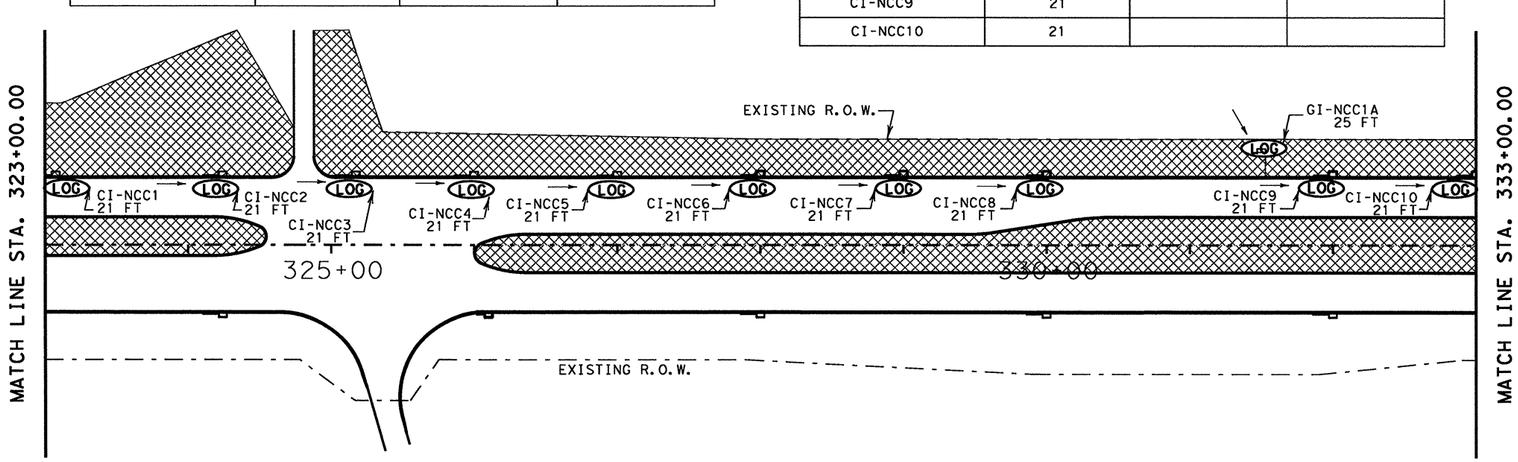

STATE OF TEXAS
NICHOLAS VON SPENCER
93702
LICENSED PROFESSIONAL ENGINEER

Signature of Registrant & Date, P.E. 5-25-11

Texas Department of Transportation
© 2011

SH 289
SW3P LAYOUT PHASE II

SCALE: 1"=100'

SHEET 2 OF 12

DESIGN	FED. RD. DIV. NO.	STATE PROJECT NO.		HIGHWAY NO.
DF	6	(SEE TITLE SHEET)		SH 289
GRAPHICS DF	STATE	DISTRICT	COUNTY	SHEET NO.
CHECK NVS	TEXAS	DALLAS	COLLIN	470
CHECK NVS	CONTROL 0091	SECTION 04	JOB 055	

T:\DALDGN*A\SH 289 Ceiling\THE PLANS\SW3P\95% New SW3P sheets\Phase II\SW3P*phaseII*2.dgn 5/25/2011 10:19:10 AM

R-201104-01

DATE DISTURBED	DATE STABILIZED

1. SEE SW3P SUMMARY FOR SHEET TOTALS.
2. OVERALL SW3P INSTALLATION SHALL FOLLOW CONSTRUCTION SEQUENCE.
3. CURB INLET CONSTRUCTION WILL REQUIRE EROSION CONTROL LOG PLACEMENT IN SUB PHASES NOT SHOWN.
4. ROCK FILTER DAMS ARE PLACED IN THE PHASE SHOWN AND SHALL REMAIN UNTIL FINAL GRADING AND STABILIZATION.
5. CONSTRUCTIONS EXITS SHOWN CAN BE RELOCATED AS REQUIRED WITH APPROVAL OF THE ENGINEER.

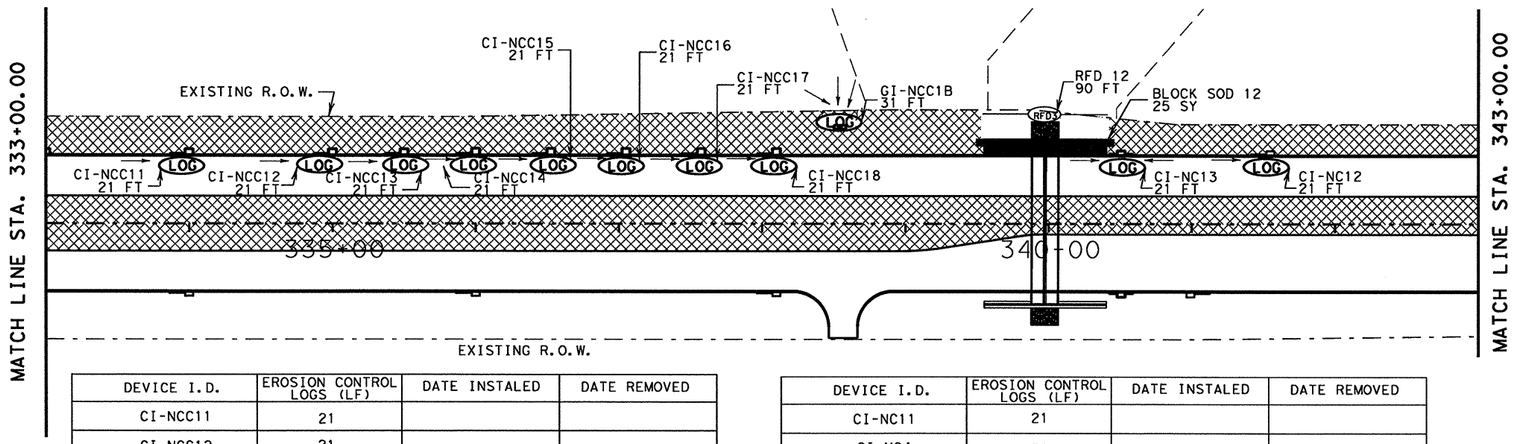

DEVICE I.D.	EROSION CONTROL LOGS (LF)	DATE INSTALED	DATE REMOVED
CI-NCC11	21		
CI-NCC12	21		
CI-NCC13	21		
CI-NCC14	21		
CI-NCC15	21		
CI-NCC16	21		
CI-NCC17	21		
CI-NCC18	21		
GI-NCC1B	31		
CI-NC13	21		
CI-NC12	21		

DEVICE I.D.	EROSION CONTROL LOGS (LF)	DATE INSTALED	DATE REMOVED
CI-NC11	21		
GI-NC4	31		
CI-NC10	21		
GI-NC3	31		
CI-NC9	21		
CI-NC8	21		
CI-NC7	21		
GI-NC2	26		
CI-NC6	21		
CI-NC5	21		
RFD 12	-		
BLOCK SOD 12	-		

LEGEND:

- TEMPORARY ROCK FILTER DAMS TYPE 3 — RFD3
- SEEDING
- EROSION CONTROL LOG — LOG
- DIRECTION OF FLOW
- CONSTRUCTION EXIT
- BLOCK SOD

SHEET TOTALS			
162 2002	164 2039	506 2003	5049 2001
BLOCK SODDING (SY)	DRILL SEEDING (PERM) (URBAN) (CLAY) (SY)	ROCK FILTER DAMS (INSTALL) (TY 3) (LF)	BIODGRD EROSION CONTROL LOGS (8" DIA) (LF)
25	12542	90	538

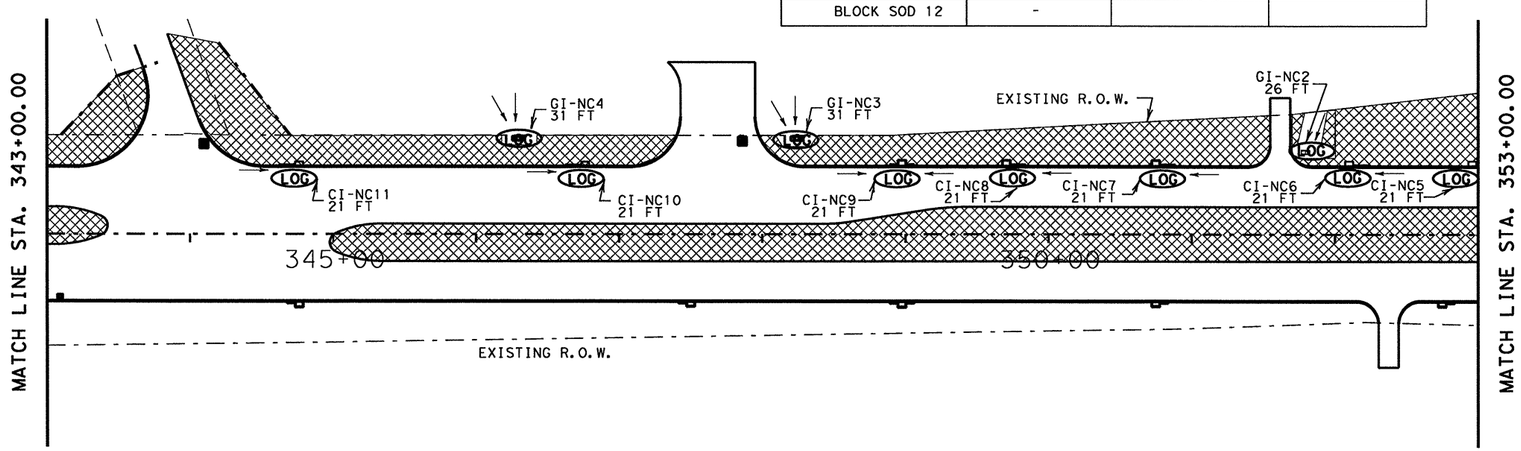

STATE OF TEXAS
NICHOLAS VON SPENCER
93702
LICENSED
PROFESSIONAL ENGINEER

Nicholas V. Spencer, P.E. 5-25-11
Signature of Registrant & Date

Texas Department of Transportation
© 2011

SH 289
SW3P LAYOUT PHASE II

SCALE: 1"=100' SHEET 3 OF 12

DESIGN	FED. RD. DIV. NO.	STATE PROJECT NO.		HIGHWAY NO.
DF	6	(SEE TITLE SHEET)		SH 289
GRAPHICS DF	STATE	DISTRICT	COUNTY	SHEET NO.
CHECK NVS	TEXAS	DALLAS	COLLIN	471
CHECK NVS	CONTROL	SECTION	JOB	
	0091	04	055	

T:\DALDGN*A\SH 289 Celina\THE PLANS\SW3P\95% New SW3P sheets\Phase II\SW3P*phaseII*3.dgn 5/25/2011 10:19:22 AM

R-201104-01

DATE DISTURBED	DATE STABILIZED

1. SEE SW3P SUMMARY FOR SHEET TOTALS.
2. OVERALL SW3P INSTALLATION SHALL FOLLOW CONSTRUCTION SEQUENCE.
3. CURB INLET CONSTRUCTION WILL REQUIRE EROSION CONTROL LOG PLACEMENT IN SUB PHASES NOT SHOWN.
4. ROCK FILTER DAMS ARE PLACED IN THE PHASE SHOWN AND SHALL REMAIN UNTIL FINAL GRADING AND STABILIZATION.
5. CONSTRUCTIONS EXITS SHOWN CAN BE RELOCATED AS REQUIRED WITH APPROVAL OF THE ENGINEER.

LEGEND:

TEMPORARY ROCK FILTER DAMS TYPE 3 — RFD3

SEEDING

EROSION CONTROL LOG — LOG

DIRECTION OF FLOW

CONSTRUCTION EXIT

BLOCK SOD

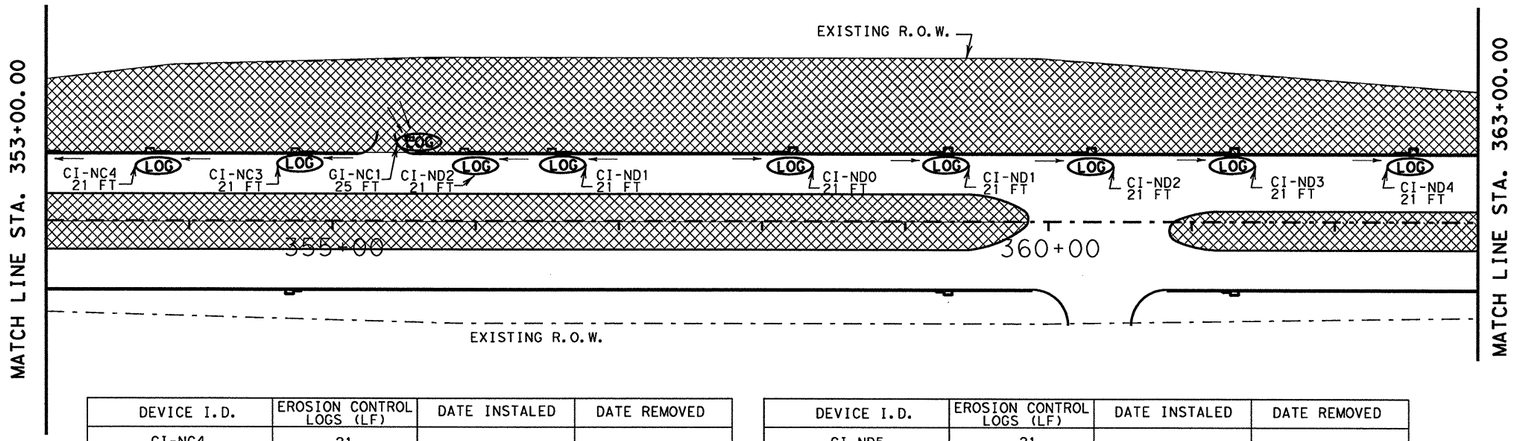

DEVICE I.D.	EROSION CONTROL LOGS (LF)	DATE INSTALED	DATE REMOVED
CI-NC4	21		
CI-NC3	21		
GI-NC1	25		
CI-ND2	21		
CI-ND1	21		
CI-ND0	21		
CI-ND1	21		
CI-ND2	21		
CI-ND3	21		
CI-ND4	21		

DEVICE I.D.	EROSION CONTROL LOGS (LF)	DATE INSTALED	DATE REMOVED
CI-ND5	21		
CI-ND6	21		
CI-ND7	21		
CI-ND8	21		
CI-ND9	21		
CI-ND10	21		
CI-ND11	21		
GI-ND1B	31		
CI-ND12	21		
GI-ND1A	31		
CI-ND13	21		

SHEET TOTALS		
164 2039	506 2016	5049 2001
DRILL SEEDING (PERM) (URBAN) (CLAY) (SY)	CONSTRUCTION EXITS (INSTALL) (TY 1) (SY)	BIODGRD EROSION CONTROL LOGS (8" DIA) (LF)
16351	0	465

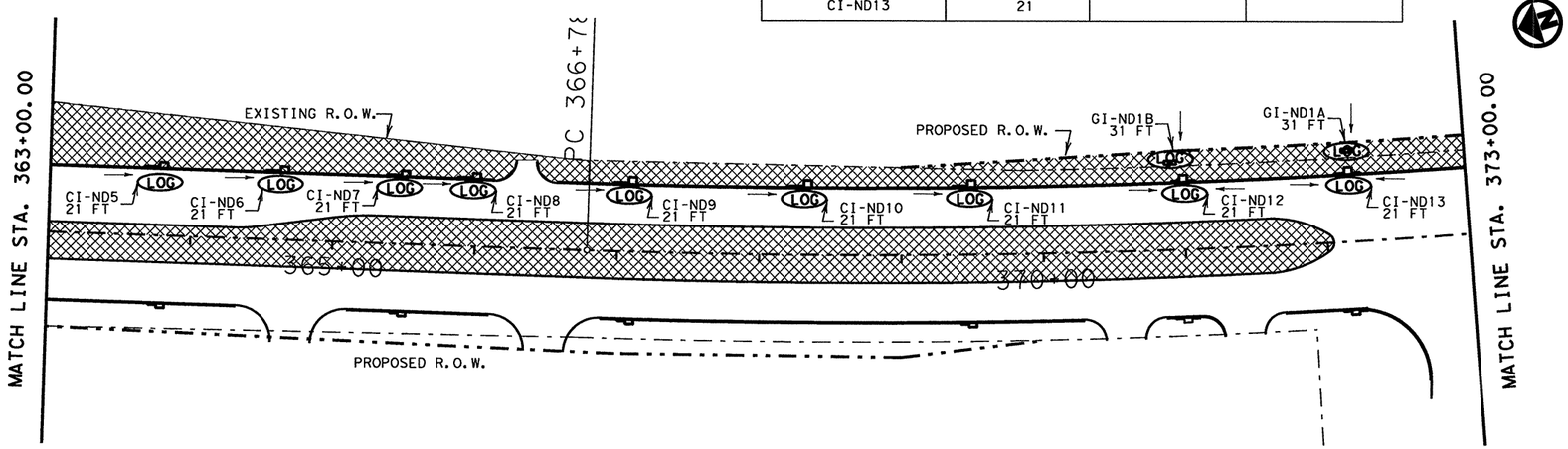

STATE OF TEXAS
NICHOLAS VON SPENCER
93702
LICENSED PROFESSIONAL ENGINEER

Signature of Registrant & Date, P.E. 5-25-11

Texas Department of Transportation
© 2011

SH 289
SW3P LAYOUT PHASE II

SCALE: 1"=100' SHEET 4 OF 12

DESIGN	FED. RD. DIV. NO.	STATE PROJECT NO.		HIGHWAY NO.
DF	6	(SEE TITLE SHEET)		SH 289
GRAPHICS DF	STATE	DISTRICT	COUNTY	SHEET NO.
CHECK NVS	TEXAS	DALLAS	COLLIN	472
CHECK NVS	CONTROL	SECTION	JOB	
	0091	04	055	

5/25/2011 10:19:32 AM

T:\DALDGN*A\SH 289 Celina\THE PLANS\SW3P\95% New SW3P sheets\Phase II\SW3P*phaseII*4.dgn

R-201104-01

DATE DISTURBED	DATE STABILIZED

1. SEE SW3P SUMMARY FOR SHEET TOTALS.
2. OVERALL SW3P INSTALLATION SHALL FOLLOW CONSTRUCTION SEQUENCE.
3. CURB INLET CONSTRUCTION WILL REQUIRE EROSION CONTROL LOG PLACEMENT IN SUB PHASES NOT SHOWN.
4. ROCK FILTER DAMS ARE PLACED IN THE PHASE SHOWN AND SHALL REMAIN UNTIL FINAL GRADING AND STABILIZATION.
5. CONSTRUCTIONS EXITS SHOWN CAN BE RELOCATED AS REQUIRED WITH APPROVAL OF THE ENGINEER.

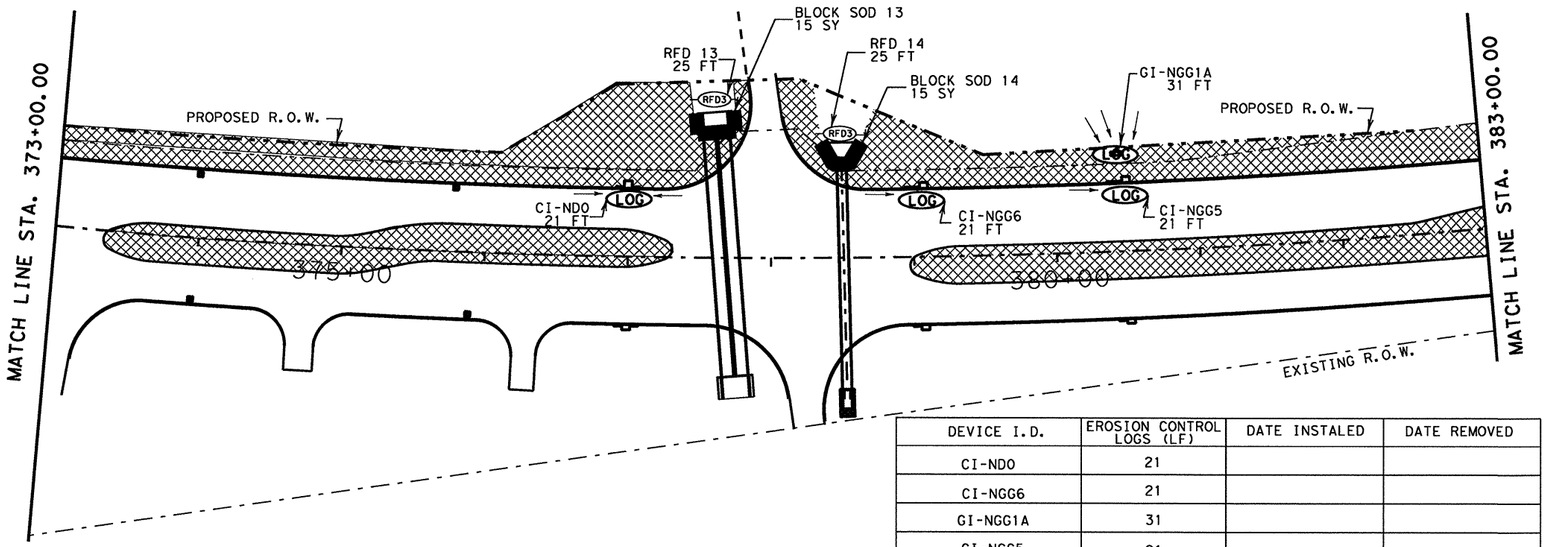

DEVICE I.D.	EROSION CONTROL LOGS (LF)	DATE INSTALED	DATE REMOVED
BLOCK SOD 13	-		
BLOCK SOD 14	-		
BLOCK SOD 15	-		

DEVICE I.D.	EROSION CONTROL LOGS (LF)	DATE INSTALED	DATE REMOVED
CI-NDO	21		
CI-NGG6	21		
GI-NGG1A	31		
CI-NGG5	21		
CI-NGG4	21		
CI-NGG3	21		
CI-NGG2	21		
CI-NGG1	21		
GI-NG1C	31		
RFD 13	-		
RFD 14	-		
RFD 15	-		

LEGEND:

TEMPORARY ROCK FILTER DAMS TYPE 3	RFD3
SEEDING	
EROSION CONTROL LOG	LOG
DIRECTION OF FLOW	
CONSTRUCTION EXIT	
BLOCK SOD	

SHEET TOTALS			
162 2002	164 2039	506 2003	5049 2001
BLOCK SODDING (SY)	DRILL SEEDING (PERM) (URBAN) (CLAY) (SY)	ROCK FILTER DAMS (INSTALL) (TY 3) (LF)	BIODGRD EROSION CONTROL LOGS (8" DIA) (LF)
50	12983	100	259

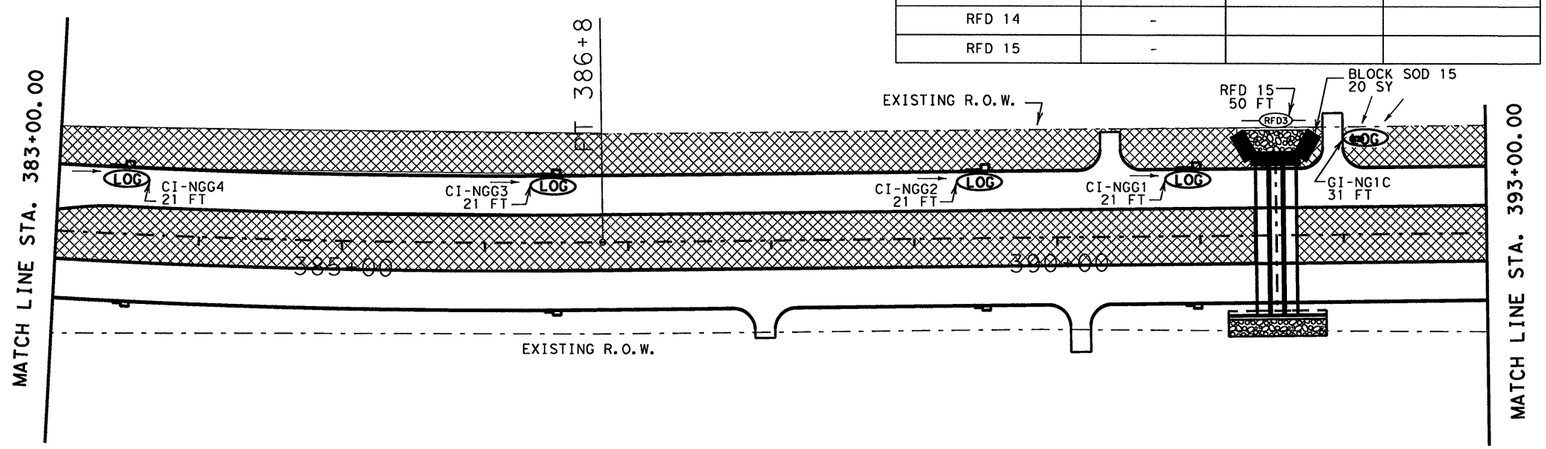

STATE OF TEXAS
NICHOLAS VON SPENCER
93702
LICENSED PROFESSIONAL ENGINEER

Signature of Registrant & Date, P.E. 5-25-11

Texas Department of Transportation
© 2011

SH 289
SW3P LAYOUT PHASE II

SCALE: 1"=100' SHEET 5 OF 12

DESIGN	FED. RD. DIV. NO.	STATE PROJECT NO.		HIGHWAY NO.
DF	6	(SEE TITLE SHEET)		SH 289
GRAPHICS DF	STATE	DISTRICT	COUNTY	SHEET NO.
CHECK NVS	TEXAS	DALLAS	COLLIN	473
CHECK NVS	CONTROL	SECTION	JOB	
	0091	04	055	

T:\DALDGN*A\SH 289 Celina\THE PLANS\SW3P\95% New SW3P sheets\Phase II\SW3P*phase II*5.dgn 5/25/2011 10:19:45 AM

R-201104-01

5/25/2011 10:19:56 AM
T:\DALDGN*A\SH 289 Collin\THE PLANS\SW3P\95% New SW3P sheets\Phase II\SW3P*phaseII*6.dgn

1. SEE SW3P SUMMARY FOR SHEET TOTALS.
2. OVERALL SW3P INSTALLATION SHALL FOLLOW CONSTRUCTION SEQUENCE.
3. CURB INLET CONSTRUCTION WILL REQUIRE EROSION CONTROL LOG PLACEMENT IN SUB PHASES NOT SHOWN.
4. ROCK FILTER DAMS ARE PLACED IN THE PHASE SHOWN AND SHALL REMAIN UNTIL FINAL GRADING AND STABILIZATION.
5. CONSTRUCTIONS EXITS SHOWN CAN BE RELOCATED AS REQUIRED WITH APPROVAL OF THE ENGINEER.

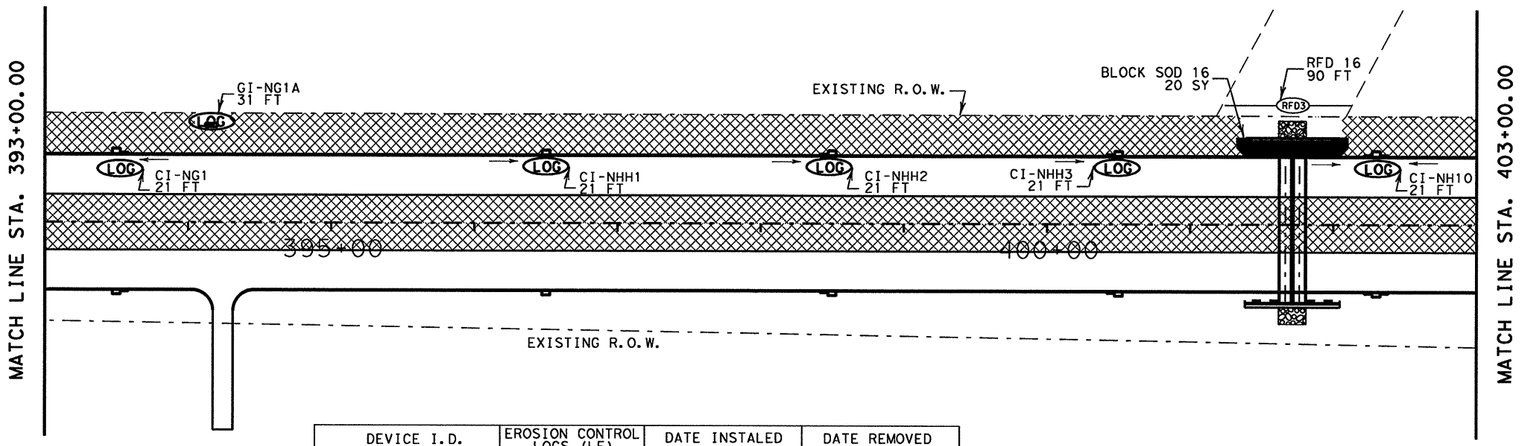

LEGEND:

- TEMPORARY ROCK FILTER DAMS TYPE 3 — RFD3
- SEEDING
- EROSION CONTROL LOG — LOG
- DIRECTION OF FLOW
- CONSTRUCTION EXIT
- BLOCK SOD

DEVICE I.D.	EROSION CONTROL LOGS (LF)	DATE INSTALED	DATE REMOVED
CI-NG1	21		
GI-NG1A	31		
CI-NHH1	21		
CI-NHH2	21		
CI-NHH3	21		
CI-NH10	21		
CI-NH9	21		
CI-NH8	21		
CI-NH7	21		
CI-NH6	21		
RDF 16	-		
BLOCK SOD 16	-		

DATE DISTURBED	DATE STABILIZED

SHEET TOTALS			
162 2002	164 2039	506 2003	5049 2001
BLOCK SODDING (SY)	DRILL SEEDING (PERM) (URBAN) (CLAY) (SY)	ROCK FILTER DAMS (INSTALL) (TY 3) (LF)	BIODGRD EROSION CONTROL LOGS (8" DIA) (LF)
20	14377	90	220

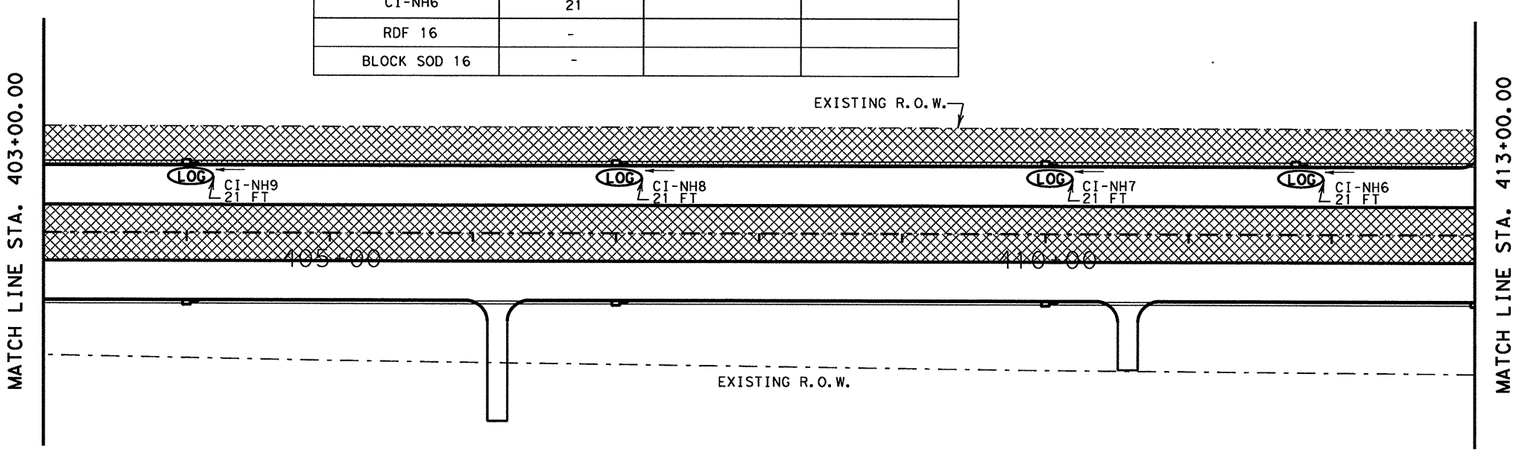

STATE OF TEXAS
NICHOLAS VON SPENCER
93702
LICENSED
PROFESSIONAL ENGINEER

Nicholas V Spencer, P.E. 5-25-11
Signature of Registrant & Date

Texas Department of Transportation
© 2011

SH 289
SW3P LAYOUT PHASE II

SCALE: 1"=100'

SHEET 6 OF 12

DESIGN	FED. RD. DIV. NO.	STATE PROJECT NO.		HIGHWAY NO.
DF	6	(SEE TITLE SHEET)		SH 289
GRAPHICS DF	STATE	DISTRICT	COUNTY	SHEET NO.
CHECK NVS	TEXAS	DALLAS	COLLIN	474
CHECK NVS	CONTROL	SECTION	JOB	
	0091	04	055	

5/25/2011 10:30:13 AM
T:\DALDGN*A\SH 289 Ceiling\THE PLANS\SW3P\95% New SW3P sheets\Phase II\SW3P*phaseII*7.dgn

1. SEE SW3P SUMMARY FOR SHEET TOTALS.
2. OVERALL SW3P INSTALLATION SHALL FOLLOW CONSTRUCTION SEQUENCE.
3. CURB INLET CONSTRUCTION WILL REQUIRE EROSION CONTROL LOG PLACEMENT IN SUB PHASES NOT SHOWN.
4. ROCK FILTER DAMS ARE PLACED IN THE PHASE SHOWN AND SHALL REMAIN UNTIL FINAL GRADING AND STABILIZATION.
5. CONSTRUCTIONS EXITS SHOWN CAN BE RELOCATED AS REQUIRED WITH APPROVAL OF THE ENGINEER.

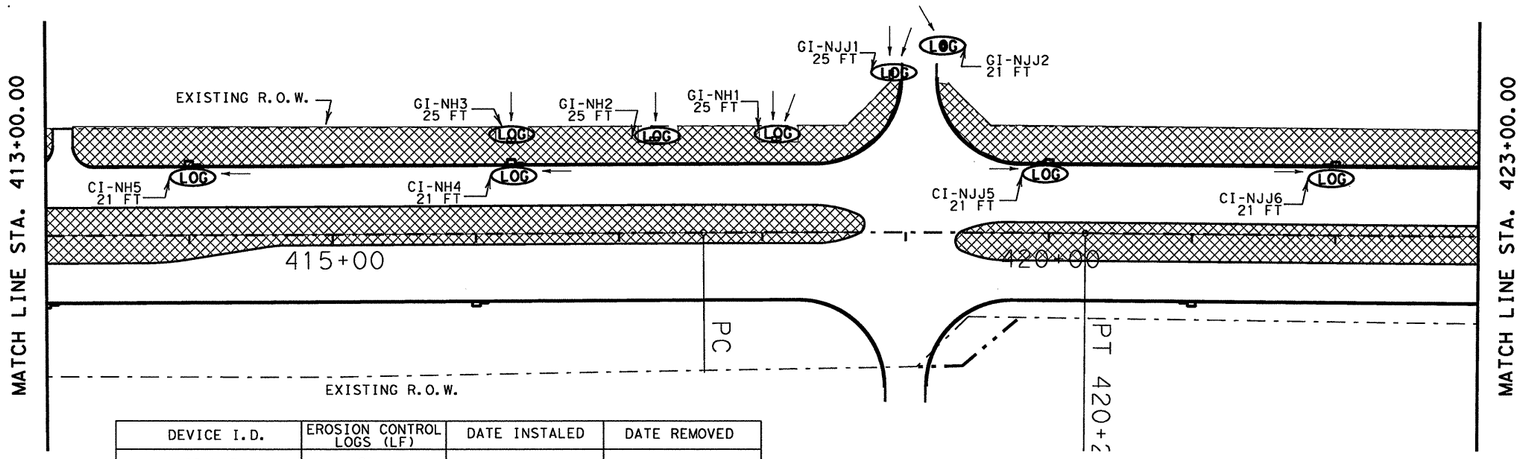

DEVICE I.D.	EROSION CONTROL LOGS (LF)	DATE INSTALED	DATE REMOVED
CI-NH5	21		
CI-NH4	21		
GI-NH3	25		
GI-NH2	25		
GI-NH1	25		
GI-NJJ1	25		
GI-NJJ2	21		
CI-NJJ5	21		
CI-NJJ6	21		
CI-NJJ7	21		
CI-NJJ8	21		
CI-NJJ9	21		
CI-NJJ10	21		

DATE DISTURBED	DATE STABILIZED

LEGEND:

- TEMPORARY ROCK FILTER DAMS TYPE 3 — RFD3
- SEEDING
- EROSION CONTROL LOG — LOG
- DIRECTION OF FLOW
- CONSTRUCTION EXIT
- BLOCK SOD

SHEET TOTALS			
164 2039	506 2003	506 2016	5049 2001
DRILL SEEDING (PERM) (URBAN) (CLAY) (SY)	ROCK FILTER DAMS (INSTALL) (TY 3) (LF)	CONSTRUCTION EXITS (INSTALL) (TY 1) (SY)	BIODGRD EROSION CONTROL LOGS (8" DIA) (LF)
12323	0	0	289

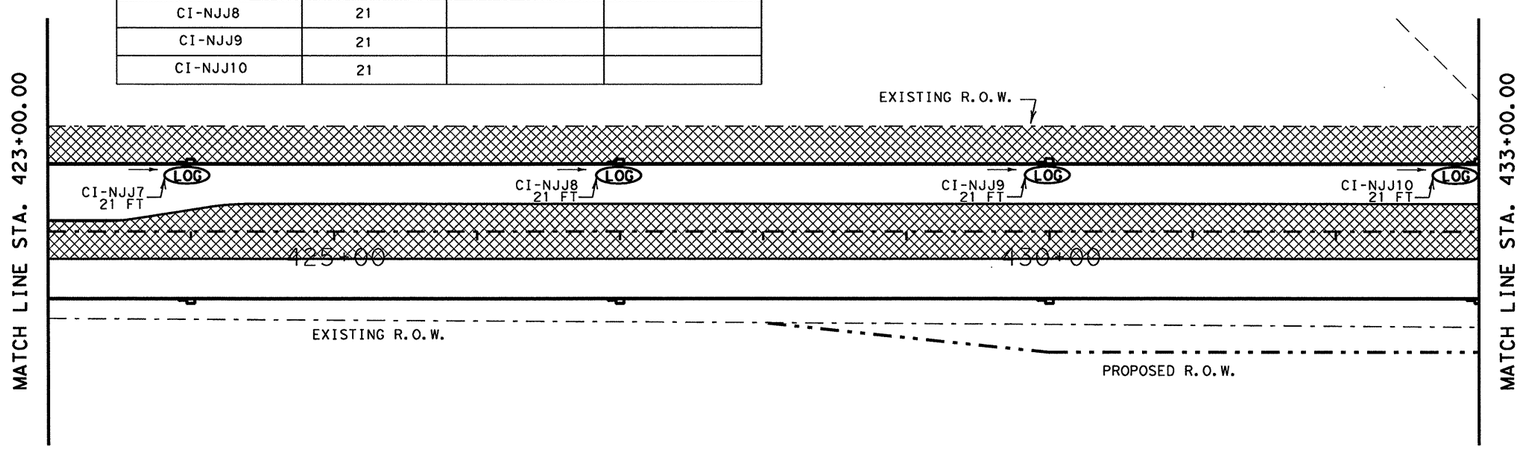

STATE OF TEXAS
NICHOLAS VON SPENCER
93702
LICENSED
PROFESSIONAL ENGINEER

Signature of Registrant, P.E. & Date 5-25-11

Texas Department of Transportation
© 2011

SH 289
SW3P LAYOUT PHASE II

SCALE: 1"=100' SHEET 7 OF 12

DESIGN	FED. RD. DIV. NO.	STATE PROJECT NO.		HIGHWAY NO.
DF	6	(SEE TITLE SHEET)		SH 289
GRAPHICS DF	STATE	DISTRICT	COUNTY	SHEET NO.
CHECK NVS	TEXAS	DALLAS	COLLIN	475
CHECK NVS	CONTROL 0091	SECTION 04	JOB 055	

5/25/2011 10:30:22 AM
T:\DALDGN*A\SH 289 Celina\THE PLANS\SW3P\95% New SW3P sheets\Phase II\SW3P*phaseII*8.dgn

1. SEE SW3P SUMMARY FOR SHEET TOTALS.
2. OVERALL SW3P INSTALLATION SHALL FOLLOW CONSTRUCTION SEQUENCE.
3. CURB INLET CONSTRUCTION WILL REQUIRE EROSION CONTROL LOG PLACEMENT IN SUB PHASES NOT SHOWN.
4. ROCK FILTER DAMS ARE PLACED IN THE PHASE SHOWN AND SHALL REMAIN UNTIL FINAL GRADING AND STABILIZATION.
5. CONSTRUCTIONS EXITS SHOWN CAN BE RELOCATED AS REQUIRED WITH APPROVAL OF THE ENGINEER.

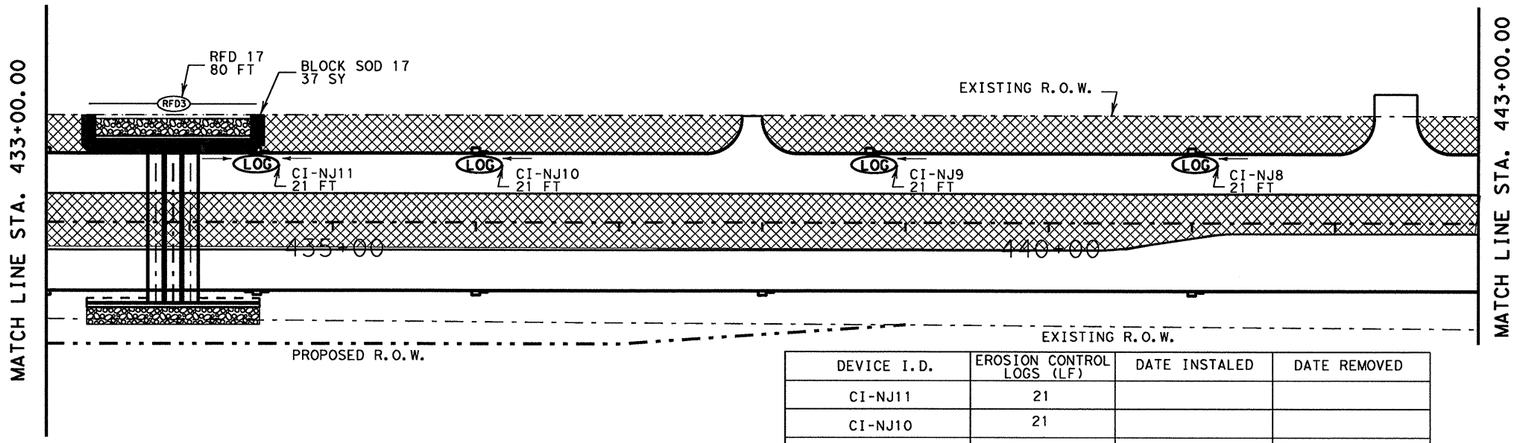

DATE DISTURBED	DATE STABILIZED

DEVICE I.D.	EROSION CONTROL LOGS (LF)	DATE INSTALED	DATE REMOVED
CI-NJ11	21		
CI-NJ10	21		
CI-NJ9	21		
CI-NJ8	21		
CI-NJ7	21		
GI-NJ6	21		
CI-NJ5	21		
CI-NJ4	21		
CI-NJ3	21		
CI-NJ2	21		
CI-NJ1	21		
RFD 17	-		
BLOCK SOD 17	-		

LEGEND:

TEMPORARY ROCK FILTER DAMS TYPE 3 — RFD3

SEEDING

EROSION CONTROL LOG — LOG

DIRECTION OF FLOW

CONSTRUCTION EXIT

BLOCK SOD

SHEET TOTALS			
162 2002	164 2039	506 2003	5049 2001
BLOCK SODDING (SY)	DRILL SEEDING (PERM) (URBAN) (CLAY) (SY)	ROCK FILTER DAMS (INSTALL) (TY 3) (LF)	BIODGRD EROSION CONTROL LOGS (8" DIA) (LF)
37	14451	80	231

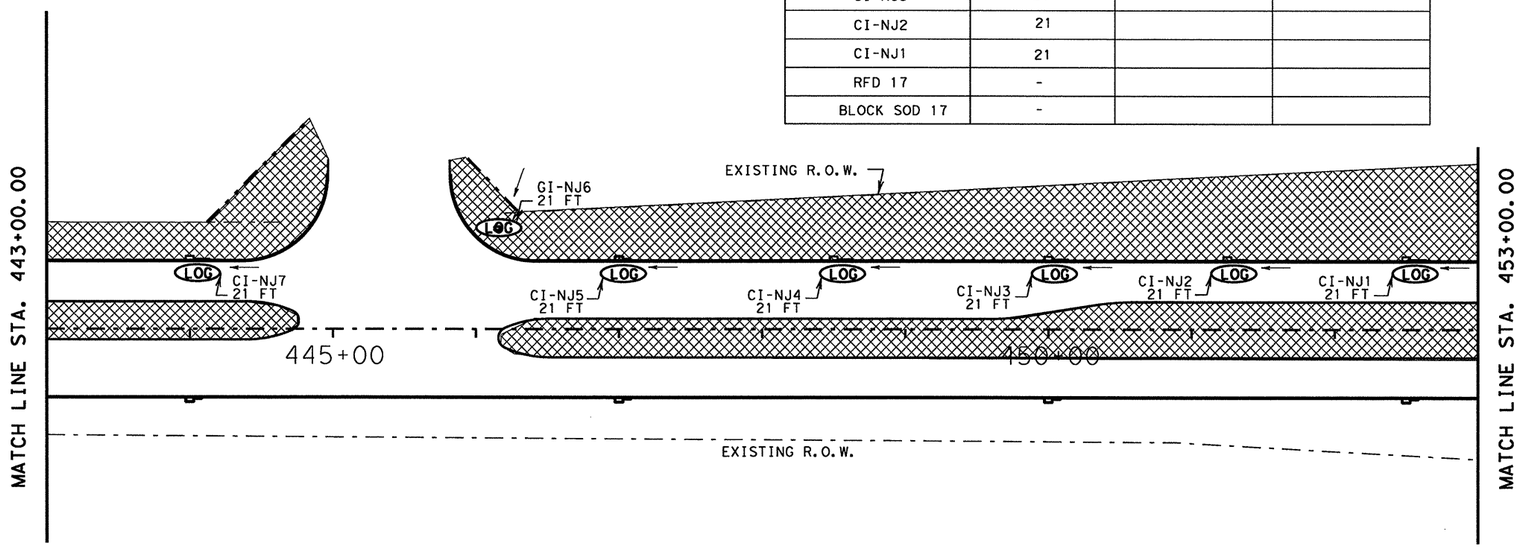

STATE OF TEXAS
NICHOLAS VON SPENCER
93702
LICENSED PROFESSIONAL ENGINEER

Nicholas V Spencer, P.E. 5-25-11
Signature of Registrant & Date

Texas Department of Transportation
© 2011

SH 289
SW3P LAYOUT PHASE II

SCALE: 1"=100'

SHEET 8 OF 12

DESIGN	FED. RD. DIV. NO.	STATE PROJECT NO.		HIGHWAY NO.
DF	6	(SEE TITLE SHEET)		SH 289
GRAPHICS DF	STATE	DISTRICT	COUNTY	SHEET NO.
CHECK NVS	TEXAS	DALLAS	COLLIN	476
CHECK NVS	CONTROL	SECTION	JOB	
	0091	04	055	

R-201104-01

DATE DISTURBED	DATE STABILIZED

1. SEE SW3P SUMMARY FOR SHEET TOTALS.
2. OVERALL SW3P INSTALLATION SHALL FOLLOW CONSTRUCTION SEQUENCE.
3. CURB INLET CONSTRUCTION WILL REQUIRE EROSION CONTROL LOG PLACEMENT IN SUB PHASES NOT SHOWN.
4. ROCK FILTER DAMS ARE PLACED IN THE PHASE SHOWN AND SHALL REMAIN UNTIL FINAL GRADING AND STABILIZATION.
5. CONSTRUCTIONS EXITS SHOWN CAN BE RELOCATED AS REQUIRED WITH APPROVAL OF THE ENGINEER.

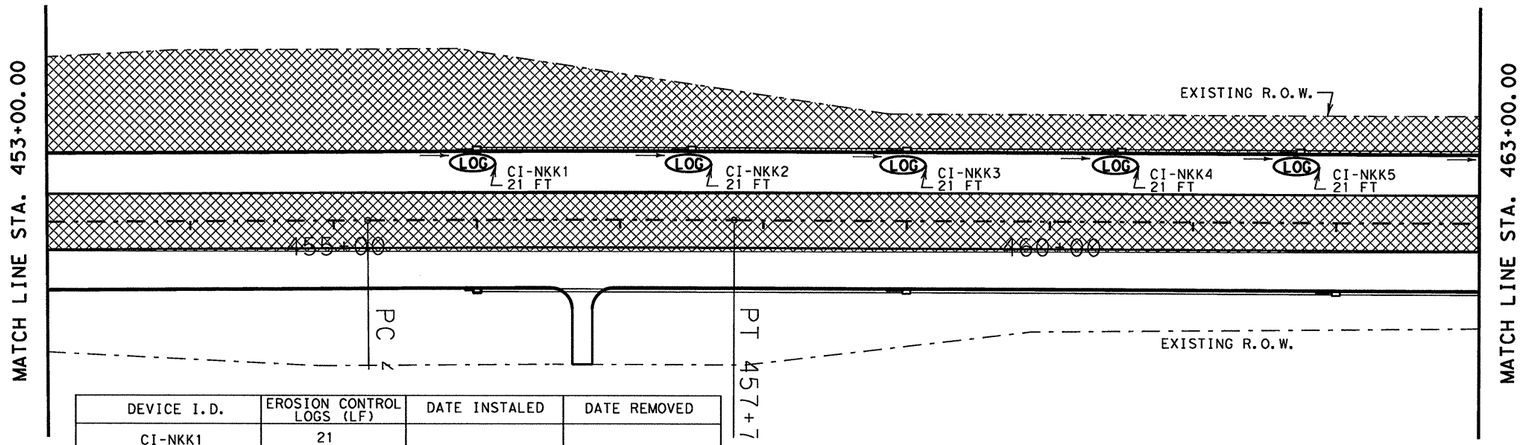

DEVICE I.D.	EROSION CONTROL LOGS (LF)	DATE INSTALED	DATE REMOVED
CI-NKK1	21		
CI-NKK2	21		
CI-NKK3	21		
CI-NKK4	21		
CI-NKK5	21		
CI-NKK6	21		
CI-NKK7	21		
CI-NKK8	21		
CI-NKK9	21		
CI-NKK10	21		
CI-NK5	21		
GI-NK4A	21		
GI-NK4	25		

DEVICE I.D.	EROSION CONTROL LOGS (LF)	DATE INSTALED	DATE REMOVED
RFD 18	-		
BLOCK SOD 18	-		

LEGEND:

TEMPORARY ROCK FILTER DAMS TYPE 3	RFD3
SEEDING	
EROSION CONTROL LOG	LOG
DIRECTION OF FLOW	→
CONSTRUCTION EXIT	
BLOCK SOD	

SHEET TOTALS			
162 2002	164 2039	506 2003	5049 2001
BLOCK SODDING (SY)	DRILL SEEDING (PERM) (URBAN) (CLAY) (SY)	ROCK FILTER DAMS (INSTALL) (TY 3) (LF)	BIODGRD EROSION CONTROL LOGS (8" DIA) (LF)
21	15005	85	277

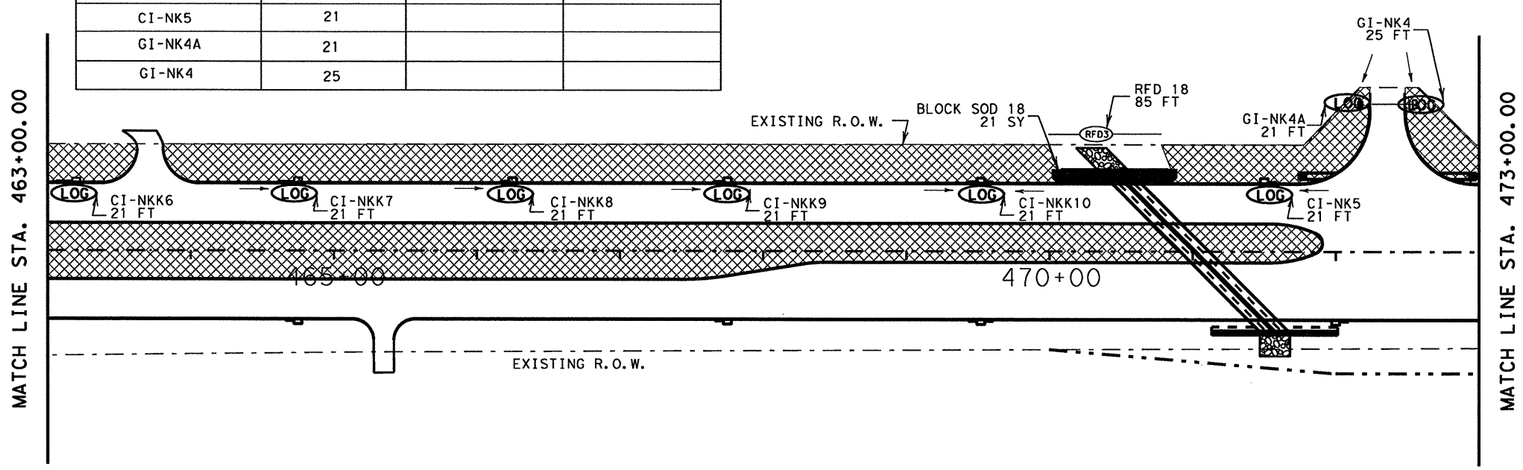

STATE OF TEXAS
NICHOLAS VON SPENCER
93702
LICENSED
PROFESSIONAL ENGINEER

Nicholas V Spencer, P.E. 5-25-11
Signature of Registrant & Date

Texas Department of Transportation
© 2011

SH 289
SW3P LAYOUT PHASE II

SCALE: 1"=100'

SHEET 9 OF 12

DESIGN	FED. RD. DIV. NO.	STATE PROJECT NO.		HIGHWAY NO.
DF	6	(SEE TITLE SHEET)		SH 289
GRAPHICS DF	STATE	DISTRICT	COUNTY	SHEET NO.
CHECK NVS	TEXAS	DALLAS	COLLIN	477
CHECK NVS	CONTROL	SECTION	JOB	
	0091	04	055	

T:\DALDGN*A\SH 289 Celina\THE PLANS\SW3P\95% New SW3P sheets\Phase II\SW3P*phaseII*9.dgn 5/25/2011 10:30:37 AM

R-201104-01

1. SEE SW3P SUMMARY FOR SHEET TOTALS.
2. OVERALL SW3P INSTALLATION SHALL FOLLOW CONSTRUCTION SEQUENCE.
3. CURB INLET CONSTRUCTION WILL REQUIRE EROSION CONTROL LOG PLACEMENT IN SUB PHASES NOT SHOWN.
4. ROCK FILTER DAMS ARE PLACED IN THE PHASE SHOWN AND SHALL REMAIN UNTIL FINAL GRADING AND STABILIZATION.
5. CONSTRUCTIONS EXITS SHOWN CAN BE RELOCATED AS REQUIRED WITH APPROVAL OF THE ENGINEER.

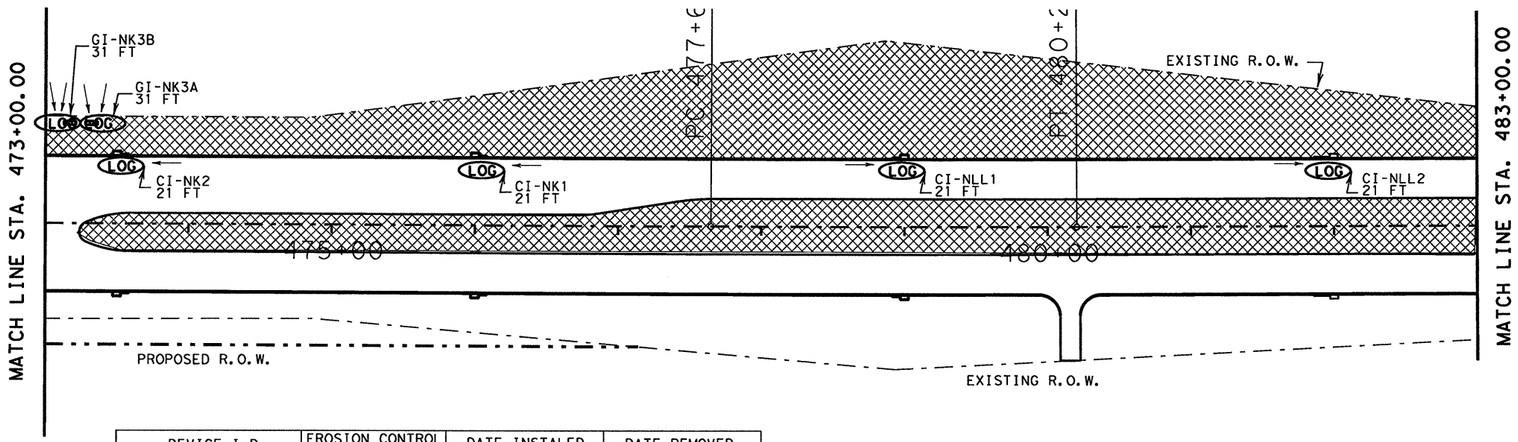

LEGEND:

TEMPORARY ROCK FILTER DAMS TYPE 3	RFD3
SEEDING	
EROSION CONTROL LOG	LOG
DIRECTION OF FLOW	
CONSTRUCTION EXIT	
BLOCK SOD	

DEVICE I.D.	EROSION CONTROL LOGS (LF)	DATE INSTALED	DATE REMOVED
GI-NK3B	31		
GI-NK3A	31		
CI-NK2	21		
CI-NK1	21		
CI-NLL1	21		
CI-NLL2	21		
CI-NLL3	21		
CI-NLL4	21		
CI-NLL5	21		
CI-NLL6	21		

DATE DISTURBED	DATE STABILIZED

SHEET TOTALS			
164 2039	506 2003	506 2016	5049 2001
DRILL SEEDING (PERM) (URBAN) (CLAY) (SY)	ROCK FILTER DAMS (INSTALL) (TY 3) (LF)	CONSTRUCTION EXITS (INSTALL) (TY 1) (SY)	BIODGRD EROSION CONTROL LOGS (8" DIA) (LF)
16981	0	0	230

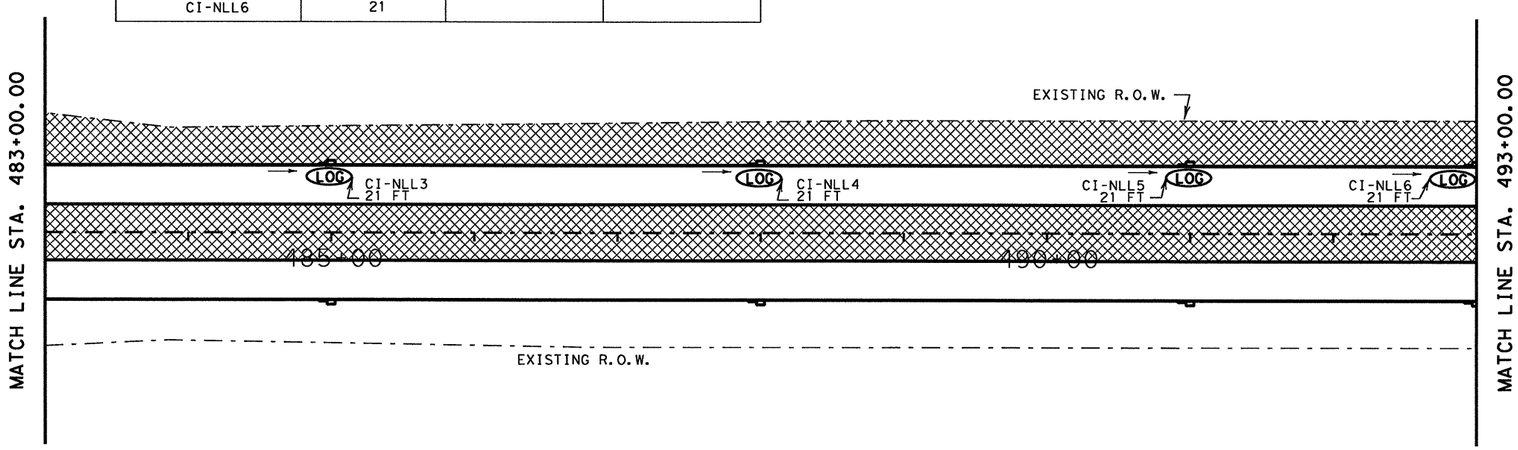

STATE OF TEXAS
NICHOLAS VON SPENCER
93702
LICENSED PROFESSIONAL ENGINEER

Signature of Registrant & Date: P.E. 5-25-11

Texas Department of Transportation
© 2011

SH 289
SW3P LAYOUT PHASE II

SCALE: 1"=100'

SHEET 10 OF 12

DESIGN	FED. RD. DIV. NO.	STATE PROJECT NO.		HIGHWAY NO.
DF	6	(SEE TITLE SHEET)		SH 289
GRAPHICS DF	STATE	DISTRICT	COUNTY	SHEET NO.
CHECK NVS	TEXAS	DALLAS	COLLIN	478
CHECK NVS	CONTROL	SECTION	JOB	
	0091	04	055	

T:\DALDGN*A\SH 289 Celina\THE PLANS\SW3P\95% New SW3P sheets\Phase II\SW3P*phaseII*10.dgn 5/25/2011 10:30:48 AM

R-201104-01

1. SEE SW3P SUMMARY FOR SHEET TOTALS.
2. OVERALL SW3P INSTALLATION SHALL FOLLOW CONSTRUCTION SEQUENCE.
3. CURB INLET CONSTRUCTION WILL REQUIRE EROSION CONTROL LOG PLACEMENT IN SUB PHASES NOT SHOWN.
4. ROCK FILTER DAMS ARE PLACED IN THE PHASE SHOWN AND SHALL REMAIN UNTIL FINAL GRADING AND STABILIZATION.
5. CONSTRUCTIONS EXITS SHOWN CAN BE RELOCATED AS REQUIRED WITH APPROVAL OF THE ENGINEER.

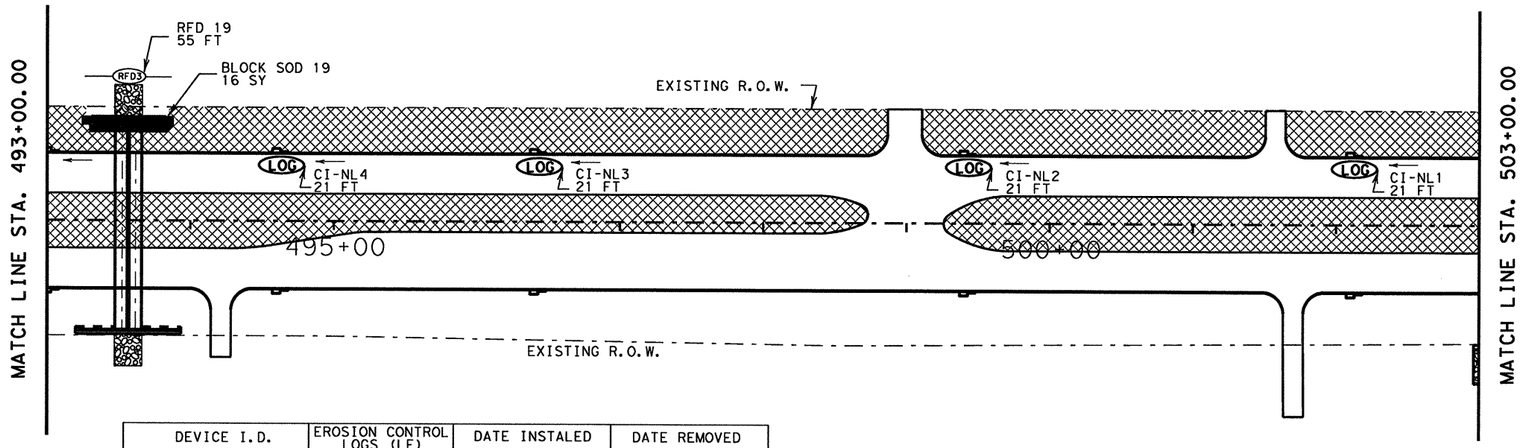

LEGEND:

TEMPORARY ROCK FILTER DAMS TYPE 3	RFD3
SEEDING	
EROSION CONTROL LOG	LOG
DIRECTION OF FLOW	
CONSTRUCTION EXIT	
BLOCK SOD	

DEVICE I.D.	EROSION CONTROL LOGS (LF)	DATE INSTALED	DATE REMOVED
CI-NL4	21		
CI-NL3	21		
CI-NL2	21		
CI-NL1	21		
CI-NM5	21		
CI-NM4	21		
CI-NM3	21		

DEVICE I.D.	EROSION CONTROL LOGS (LF)	DATE INSTALED	DATE REMOVED
RFD 19	-		
RFD 20	-		
BLOCK SOD 19	-		
BLOCK SOD 20	-		

DATE DISTURBED	DATE STABILIZED

SHEET TOTALS			
162 2002	164 2039	506 2003	5049 2001
BLOCK SODDING (SY)	DRILL SEEDING (PERM) (URBAN) (CLAY) (SY)	ROCK FILTER DAMS (INSTALL) (TY 3) (LF)	BIODGRD EROSION CONTROL LOGS (8" DIA) (LF)
52	13433	185	147

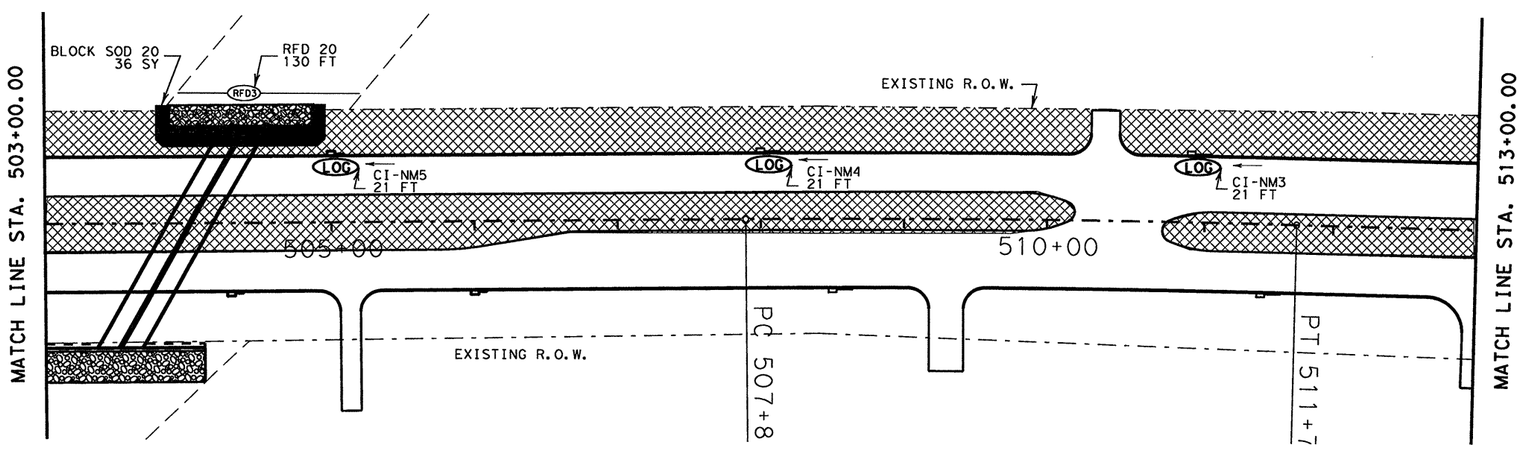

STATE OF TEXAS
NICHOLAS VON SPENCER
93702
LICENSED
PROFESSIONAL ENGINEER

Signature of Registrant & Date, P.E. 5-25-11

Texas Department of Transportation
© 2011

SH 289
SW3P LAYOUT PHASE II

SCALE: 1"=100'

SHEET 11 OF 12

DESIGN	FED. RD. DIV. NO.	STATE PROJECT NO.		HIGHWAY NO.
DF	6	(SEE TITLE SHEET)		SH 289
GRAPHICS DF	STATE	DISTRICT	COUNTY	SHEET NO.
CHECK NVS	TEXAS	DALLAS	COLLIN	479
	CONTROL	SECTION	JOB	
CHECK NVS	0091	04	055	

T:\DALDGN*A\SH 289 Collin\THE PLANS\SW3P\95% New SW3P sheets\Phase II\SW3P*phaseII*11.dgn 5/25/2011 10:30:58 AM

R-201104-01

5/25/2011 10:31:08 AM
T:\DALDGN*A\SH 289 Celina\THE PLANS\SW3P\95% New SW3P sheets\Phase II\SW3P*phaseII*12.dgn

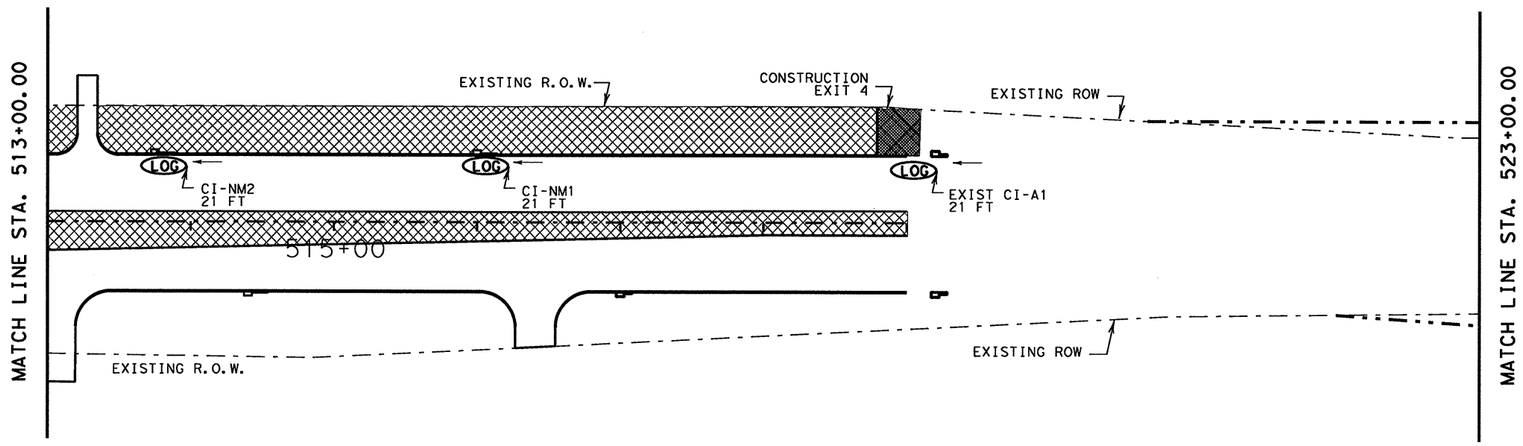

1. SEE SW3P SUMMARY FOR SHEET TOTALS.
2. OVERALL SW3P INSTALLATION SHALL FOLLOW CONSTRUCTION SEQUENCE.
3. CURB INLET CONSTRUCTION WILL REQUIRE EROSION CONTROL LOG PLACEMENT IN SUB PHASES NOT SHOWN.
4. ROCK FILTER DAMS ARE PLACED IN THE PHASE SHOWN AND SHALL REMAIN UNTIL FINAL GRADING AND STABILIZATION.
5. CONSTRUCTIONS EXITS SHOWN CAN BE RELOCATED AS REQUIRED WITH APPROVAL OF THE ENGINEER.

LEGEND:

- TEMPORARY ROCK FILTER DAMS TYPE 3 — RFD3
- SEEDING
- EROSION CONTROL LOG — LOG
- DIRECTION OF FLOW
- CONSTRUCTION EXIT
- BLOCK SOD

SHEET TOTALS			
164 2039	506 2003	506 2016	5049 2001
DRILL SEEDING (PERM) (URBAN) (CLAY) (SY)	ROCK FILTER DAMS (INSTALL) (TY 3) (LF)	CONSTRUCTION EXITS (INSTALL) (TY 1) (SY)	BIODGRD EROSION CONTROL LOGS (8" DIA) (LF)
3589	107	0	63

DEVICE I.D.	EROSION CONTROL LOGS (LF)	DATE INSTALED	DATE REMOVED
CI-NM2	21		
CI-NM1	21		
EXIST CI-A1	21		
CONSTRUCTION EXIT 4	-		

DATE DISTURBED	DATE STABILIZED

STATE OF TEXAS
NICHOLAS VON SPENCER
93702
LICENSED PROFESSIONAL ENGINEER

Nicholas V Spencer, P.E. 5-25-11
Signature of Registrant & Date

Texas Department of Transportation
© 2011

SH 289
SW3P LAYOUT PHASE II

SCALE: 1"=100'

SHEET 12 OF 12

DESIGN	FED. RD. DIV. NO.	STATE PROJECT NO.		HIGHWAY NO.
DF	6	(SEE TITLE SHEET)		SH 289
GRAPHICS DF	STATE	DISTRICT	COUNTY	SHEET NO.
CHECK NVS	TEXAS	DALLAS	COLLIN	480
CHECK NVS	CONTROL	SECTION	JOB	
	0091	04	055	

DISCLAIMER:
The use of this standard is governed by the "Texas Engineering Practice Act". No warranty of any kind is made by TxDOT for any purpose whatsoever. TxDOT assumes no responsibility for the conversion of this standard to other formats or for incorrect results or damages resulting from its use.

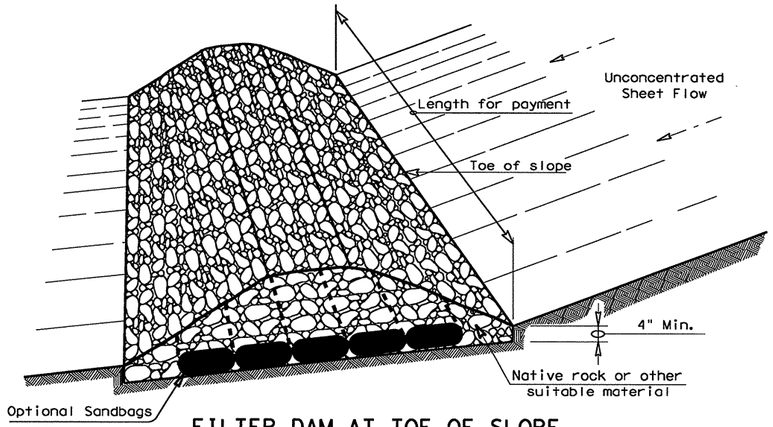

FILTER DAM AT TOE OF SLOPE

RFD1

TYPE 1

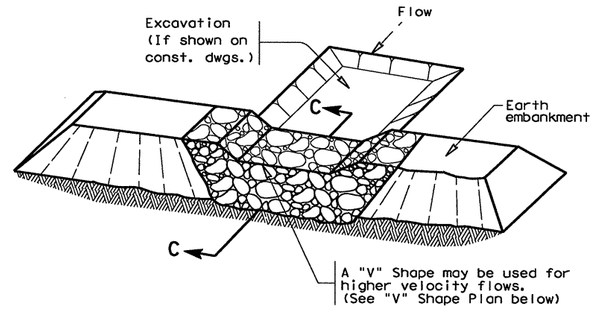

FILTER DAM AT SEDIMENT TRAP

RFD1 — OR — RFD2

TYPE 1 OR TYPE 2

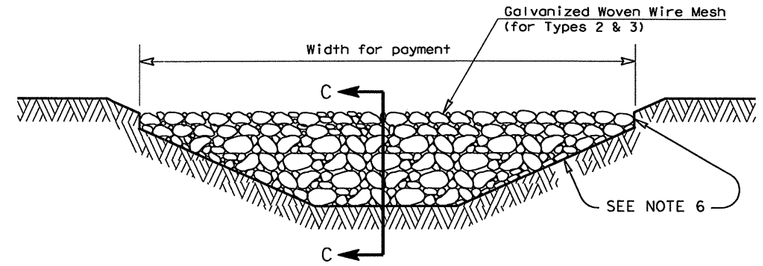

FILTER DAM AT CHANNEL SECTIONS

RFD1 — OR — RFD2 — OR — RFD3

TYPE 1 OR TYPE 2

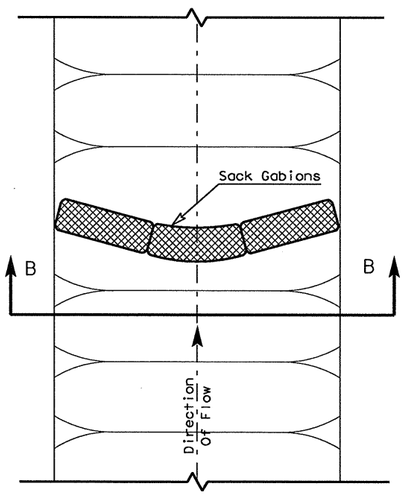

PLAN VIEW

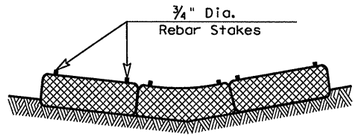

SECTION B-B

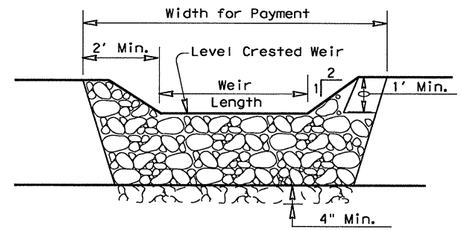

PROFILE

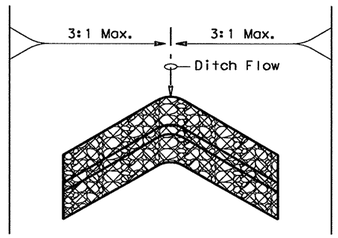

"V" SHAPE

(Plan View)

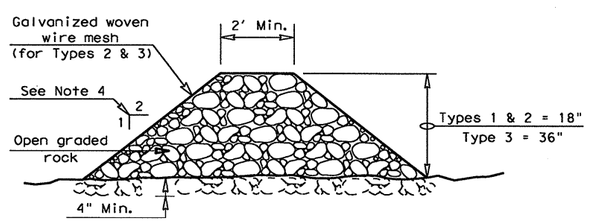

SECTION C-C

PLANS SHEET LEGEND

Type 1 Rock Filter Dam — RFD1

Type 2 Rock Filter Dam — RFD2

Type 3 Rock Filter Dam — RFD3

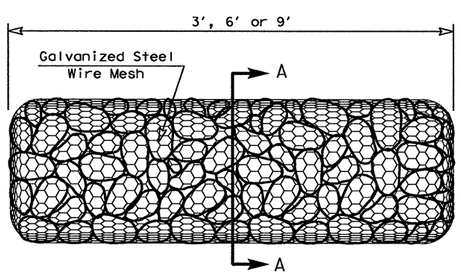

TYPE 4 (SACK GABIONS)

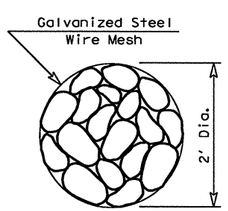

SECTION A-A

ROCK FILTER DAM USAGE GUIDELINES

Rock Filter Dams should be constructed downstream from disturbed areas to intercept sediment from overland runoff and/or concentrated flow. The dams should be sized to filter a maximum flow through rate of 60 GPM/FT^2 of cross sectional area. A 2 year storm frequency may be used to calculate the flow rate.

Type 1 (18" high with no wire mesh): Type 1 may be used at the toe of slopes, around inlets, in small ditches, and at dike or swale outlets. This type of dam is recommended to control erosion from a drainage area of 5 acres or less. Type 1 may not be used in concentrated high velocity flows (approx. 8 Ft/Sec or more) in which aggregate wash out may occur. Sandbags may be used at the embedded foundation (4" deep min.) for better filtering efficiency of low flows if called for on the plans or directed by the Engineer.

Type 2 (18" high with wire mesh): Type 2 may be used in ditches and at dike or swale outlets.

Type 3 (36" high with wire mesh): Type 3 may be used in stream flow and should be secured to the stream bed.

Type 4 (Sack gabions): Type 4 May be used in ditches and smaller channels to form an erosion control dam.

GENERAL NOTES

1. If shown on the plans or directed by the Engineer, filter dams should be placed near the toe of slopes where erosion is anticipated, upstream and/or downstream at drainage structures, and in roadway ditches and channels to collect sediment.
2. Materials (aggregate, wire mesh, sandbags, etc.) shall be as indicated by the specification for "Rock Filter Dams for Erosion and Sedimentation Control".
3. The rock filter dam dimensions shall be as indicated on the SW3P plans.
4. Side slopes should be 2:1 or flatter. Dams within the safety zone shall have sideslopes of 6:1 or flatter.
5. Maintain a minimum of 1' between top of rock filter dam weir and top of embankment for filter dams at sediment traps.
6. Filter dams should be embedded a minimum of 4" into existing ground.
7. The sediment trap for ponding of sediment laden runoff shall be of the dimensions shown on the plans.
8. Rock filter dam types 2 & 3 shall be secured with 20 gauge galvanized woven wire mesh with 1" diameter hexagonal openings. The aggregate shall be placed on the mesh to the height & slopes specified. The mesh shall be folded at the upstream side over the aggregate and tightly secured to itself on the downstream side using wire ties or hog rings. In stream use the mesh should be secured or staked to the stream bed prior to aggregate placement.
9. Sack Gabions should be staked down with ¾" dia. rebar stakes.
10. Flow outlet should be onto a stabilized area (vegetation, rock, etc.).
11. The guidelines shown hereon are suggestions only and may be modified by the Engineer.

Texas Department of Transportation
Design Division Standard

TEMPORARY EROSION, SEDIMENT AND WATER POLLUTION CONTROL MEASURES

ROCK FILTER DAMS

EC(2)-93

FILE: ec293.dgn	DN: TxDOT	CK: HEJ	DW: BD	CK:
© TxDOT June 1993	CONT	SECT	JOB	HIGHWAY
REVISIONS	0091	04	055	SH 289
	DIST		COUNTY	SHEET NO.
	18		COLLIN	481

DATE:
FILE:

R-201104-01

DISCLAIMER:
The use of this standard is governed by the "Texas Engineering Practice Act". No warranty of any kind is made by TxDOT for any purpose whatsoever. TxDOT assumes no responsibility for the conversion of this standard to other formats or for incorrect results or damages resulting from its use.

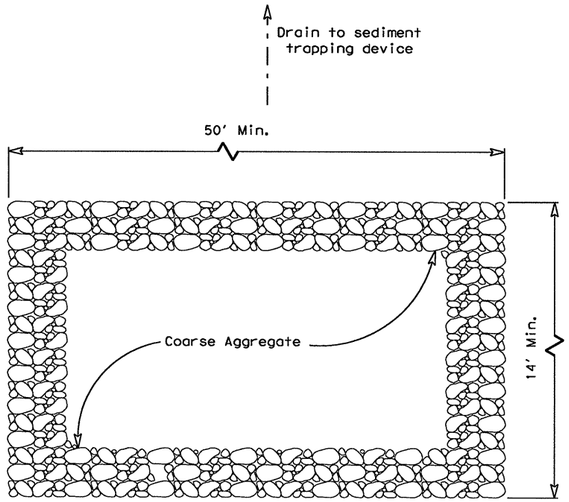

PLAN

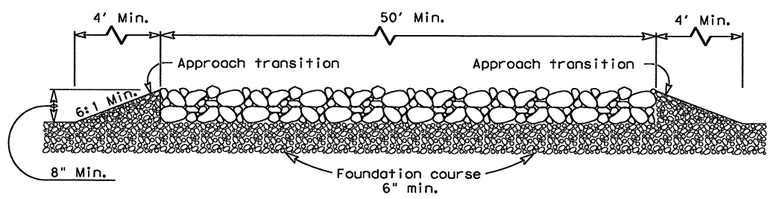

PROFILE

CONSTRUCTION EXIT (TYPE 1)

GENERAL NOTES

1. The length of the type 1 construction exit shall be as indicated on the plans, but not less than 50'.
2. The coarse aggregate should be open graded with a size of 4" to 8".
3. The approach transitions should be no steeper than 6:1 and constructed as directed by the Engineer.
4. The construction exit foundation course shall be flexible base, bituminous concrete, portland cement concrete or other material as approved by the Engineer.
5. The construction exit shall be graded to allow drainage to a sediment trapping device.
6. The guidelines shown hereon are suggestions only and may be modified by the Engineer.

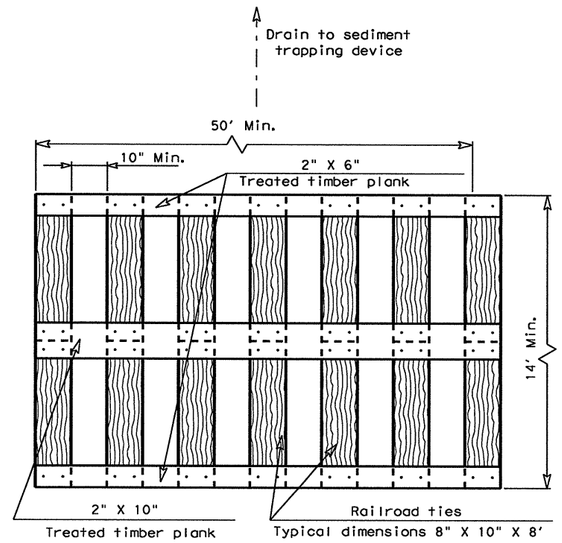

PLAN

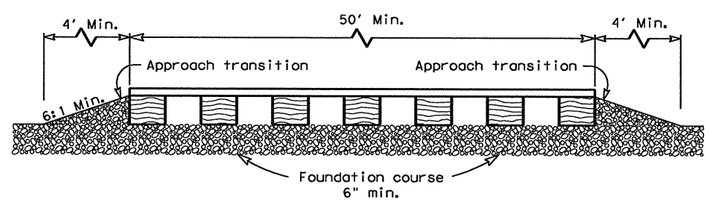

PROFILE

CONSTRUCTION EXIT (TYPE 2)

GENERAL NOTES

1. The length of the type 2 construction exit shall be as indicated on the plans, but not less than 50'.
2. The treated timber planks shall be attached to the railroad ties with ½"x 6" min. lag bolts. Other fasteners may be used as approved by the Engineer.
3. The treated timber planks shall be #2 grade min., and should be free from large and loose knots.
4. The approach transitions shall be no steeper than 6:1 and constructed as directed by the Engineer.
5. The construction exit foundation course shall be flexible base, bituminous concrete, portland cement concrete or other material as approved by the Engineer.
6. The construction exit should be graded to allow drainage to a sediment trapping device.
7. The guidelines shown hereon are suggestions only and may be modified by the Engineer.

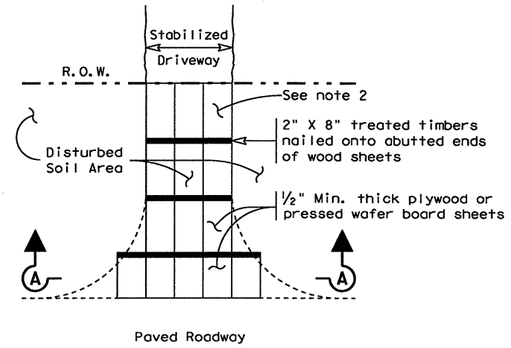

PLAN

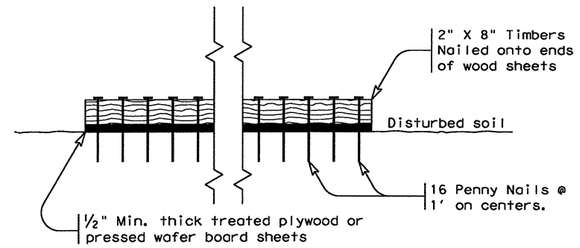

SECTION A-A

CONSTRUCTION EXIT (TYPE 3)

GENERAL NOTES

1. The length of the type 3 construction exit shall be as shown on the plans, or as directed by the Engineer.
2. The type 3 construction exit may be constructed from open graded crushed stone with a size of two to four inches spread a min. of 4" thick to the limits shown on the plans.
3. The treated timber planks shall be #2 grade min., and should be free from large and loose knots.
4. The guidelines shown hereon are suggestions only and may be modified by the Engineer.

Texas Department of Transportation
Design Division Standard

TEMPORARY EROSION, SEDIMENT AND WATER POLLUTION CONTROL MEASURES

CONSTRUCTION EXITS

EC(3)-93

FILE: ec393.dgn	DN: TxDOT	CK: HEJ	DW: BD		CK:
©TxDOT June 1993	CONT	SECT	JOB	HIGHWAY	
REVISIONS	0091	04	055	SH 289	
	DIST		COUNTY		SHEET NO.
	18		COLLIN		482

DATE:
FILE:

R-201104-01

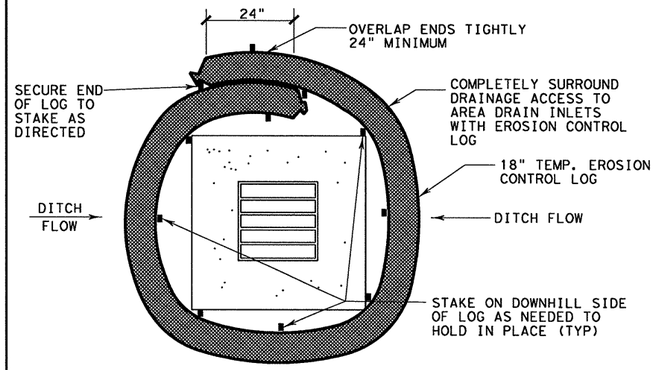

LOGS PLACED AT AREA DRAIN INLETS

NTS

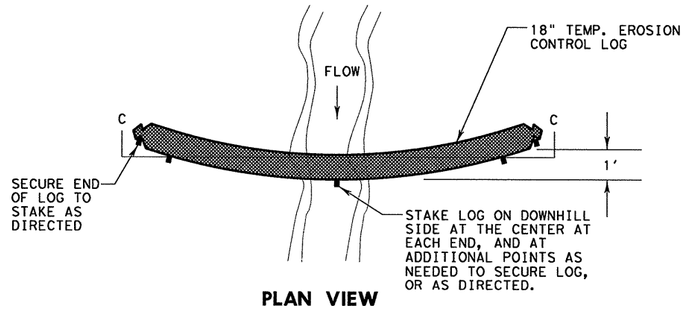

PLAN VIEW

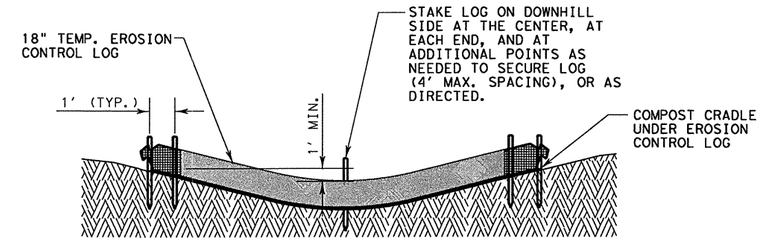

SECTION C-C

EROSION CONTROL LOG CHECK DAM

NTS

GENERAL NOTES:

1. LENGTHS OF EROSION CONTROL LOGS SHALL BE IN ACCORDANCE WITH MANUFACTURER'S RECOMMENDATIONS AND AS REQUIRED FOR THE PURPOSE INTENDED. MAXIMUM LENGTH OF LOGS SHALL BE 60' FOR 18" DIAMETER OR 30' FOR 12" DIAMETER LOGS.
2. UNLESS OTHERWISE DIRECTED, USE BIODEGRADABLE OR PHOTODEGRADABLE CONTAINMENT MESH ONLY WHERE LOG WILL REMAIN IN PLACE AS PART OF A VEGETATIVE SYSTEM. FOR TEMPORARY INSTALLATIONS, USE RECYCLABLE CONTAINMENT MESH.
3. STUFF LOGS WITH SUFFICIENT FILTER MATERIAL TO ACHIEVE DENSITY THAT WILL HOLD SHAPE WITHOUT EXCESSIVE DEFORMATION.
4. STAKES SHALL BE 2" X 2" WOOD OR #3 REBAR, 4' LONG, EMBEDDED SUCH THAT 2" PROTRUDES ABOVE LOG, OR AS DIRECTED.
5. DO NOT PLACE STAKES THROUGH CONTAINMENT MESH.

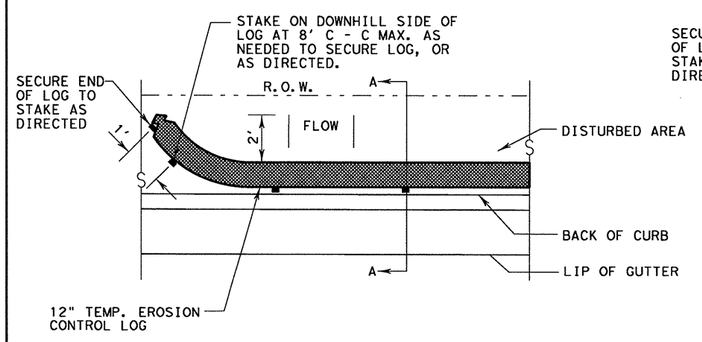

PLAN VIEW

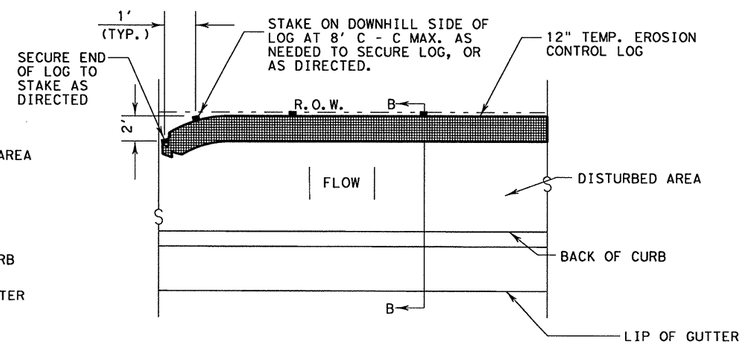

PLAN VIEW

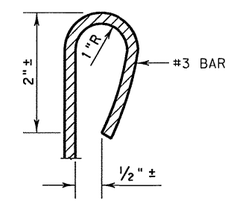

REBAR STAKE DETAIL

NTS

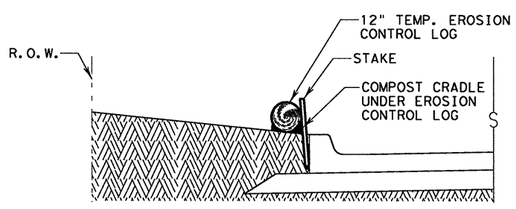

SECTION A-A

LOG PLACED AT BACK OF CURB

NTS

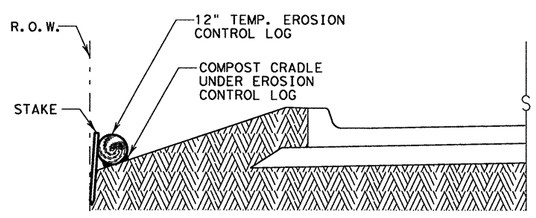

SECTION B-B

LOG PLACED AT EDGE OF RIGHT-OF-WAY

NTS

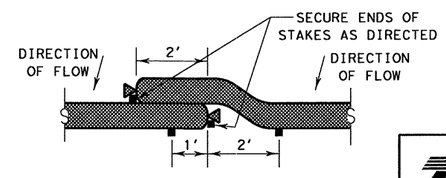

LAP DETAIL

NTS

REVISED ON 9/10/08

Texas Department of Transportation ©

DALLAS DISTRICT

EROSION CONTROL LOGS

SCALE: NOT TO SCALE

DESIGN	FED. RD. DIV. NO.	STATE PROJECT NO.		HIGHWAY NO.
GRAPHICS	6	(See Title Sheet)		SH 289
	STATE	DISTRICT	COUNTY	SHEET NO.
CHECK	TEXAS	DALLAS	COLLIN	483
CHECK	CONTROL	SECTION	JOB	
	0091	04	055	

DISCLAIMER:
The use of this standard is governed by the "Texas Engineering Practice Act". No warranty of any kind is made by TxDOT for any purpose whatsoever. TxDOT assumes no responsibility for the conversion of this standard to other formats or for incorrect results or damages resulting from its use.

DISCLAIMER:
The use of this standard is governed by the "Texas Engineering Practice Act". No warranty of any kind is made by TxDOT for any purpose whatsoever. TxDOT assumes no responsibility for the conversion of this standard to other formats or for incorrect results or damages resulting from its use.

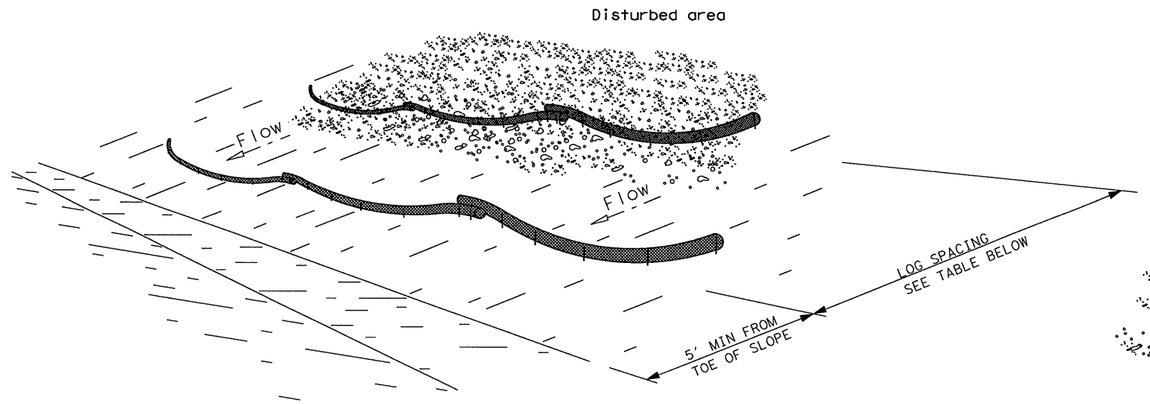

LOGS PLACED ON EXPOSED SLOPES

NTS

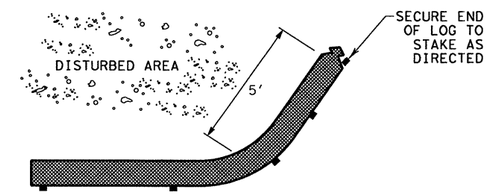

END SECTION RAP DETAIL

NTS

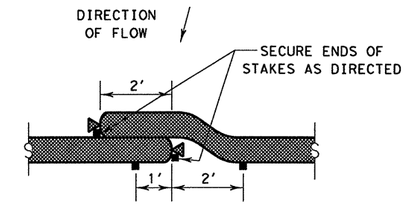

LAP DETAIL

NTS

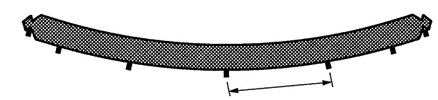

STAKE ON DOWNHILL SIDE OF LOG AT 8' C - C MAX. AS NEEDED TO SECURE LOG, OR AS DIRECTED.

STAKE DETAIL

NTS

SLOPE	LOG DIAMETER	SPACING BETWEEN LOGS
3:1	6"	15'
4:1	6"	20'
6:1	6"	25'

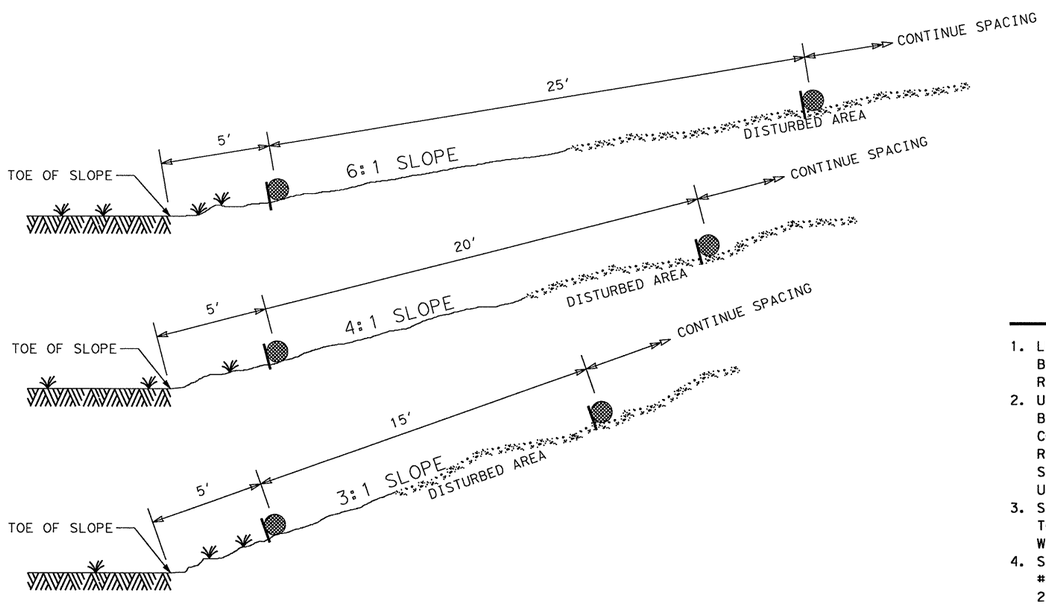

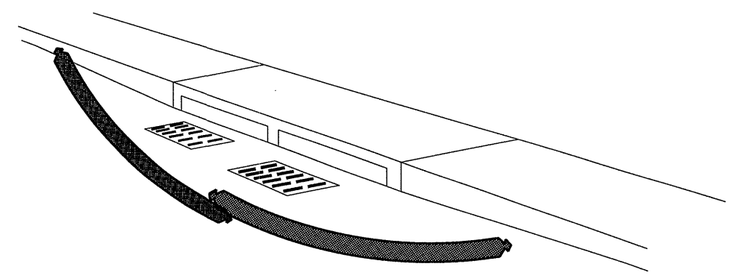

COMPLETED INLETS DETAIL

WITH NO TRAFFIC NTS

GENERAL NOTES:

1. LENGTHS OF EROSION CONTROL LOGS SHALL BE IN ACCORDANCE WITH MANUFACTURER'S RECOMMENDATIONS AND AS DIRECTED BY THE ENGINEER.
2. UNLESS OTHERWISE DIRECTED, USE BIODEGRADABLE OR PHOTODEGRADABLE CONTAINMENT MESH ONLY WHERE LOG WILL REMAIN IN PLACE AS PART OF A VEGETATIVE SYSTEM. FOR TEMPORARY INSTALLATIONS, USE RECYCLABLE CONTAINMENT MESH.
3. STUFF LOGS WITH SUFFICIENT FILTER MATERIAL TO ACHIEVE DENSITY THAT WILL HOLD SHAPE WITHOUT EXCESSIVE DEFORMATION.
4. STAKES SHALL BE 2" X 2" WOOD OR #3 REBAR, 4' LONG, EMBEDDED SUCH THAT 2" PROTRUDES ABOVE LOG, OR AS DIRECTED.
5. DO NOT PLACE STAKES THROUGH CONTAINMENT MESH.

REVISED ON 9/10/08

Texas Department of Transportation ©

DALLAS DISTRICT

EROSION CONTROL LOGS

SCALE: NOT TO SCALE SHEET 2

DESIGN	FED. RD. DIV. NO.	STATE PROJECT NO.		HIGHWAY NO.
GRAPHICS	6	(See Title Sheet)		SH 289
	STATE	DISTRICT	COUNTY	SHEET NO.
CHECK	TEXAS	DALLAS	COLLIN	484
CHECK	CONTROL	SECTION	JOB	
	0091	04	055	

http://www.dot.state.tx.us/ftw/specinfo/standard.htm <tecl fw.dgn>

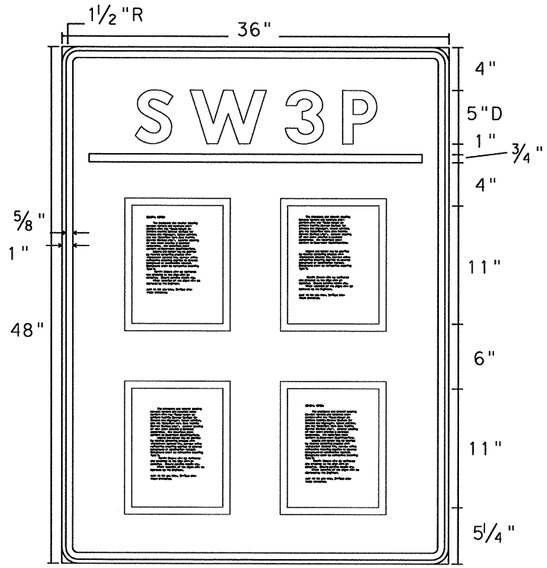

36" X 48"

Letters - White
Numbers - White
Border - White
Background - Blue

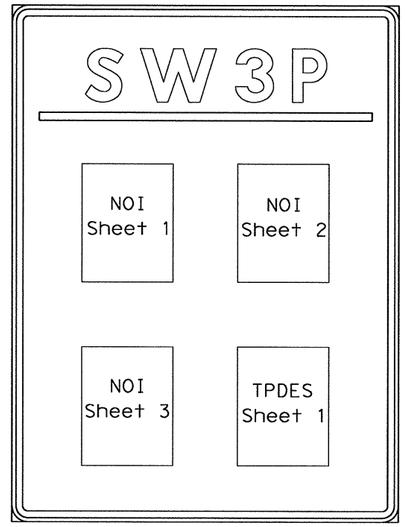

NOI Permit Sheet Arrangement

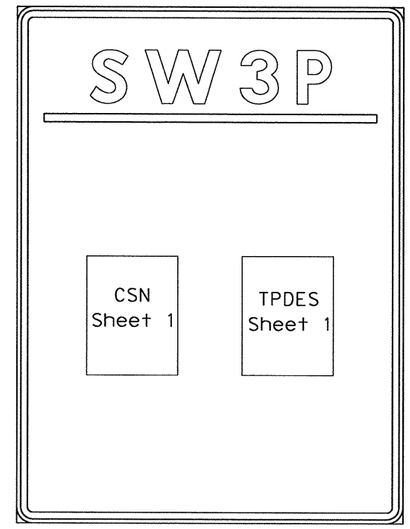

Construction Site Notice Sheet Arrangement

GENERAL NOTES:

The alphabets and lateral spacing between letters and numerals shall conform with the "Texas Manual on Uniform Traffic Control Devices for Streets and Highways", latest edition, and the "Compliant Work Zone Traffic Control Devices List". Lateral spacing of text shall provide a balanced appearance. All materials shall conform to Department Specifications.

Legend and border may be applied by reverse screening process with transparent colored ink, cut-out white reflective sheeting applied to colored background or combination thereof. Background shall be reflective sheeting Type C.

Permit Sheets will be laminated and attached to the sign with an adhesive. Ensure permits remain dry.

Final location of the signs will be approved by the Engineer.

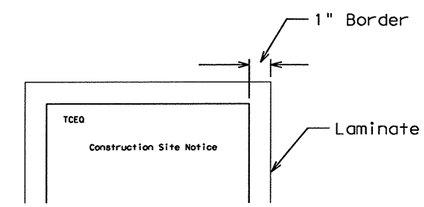

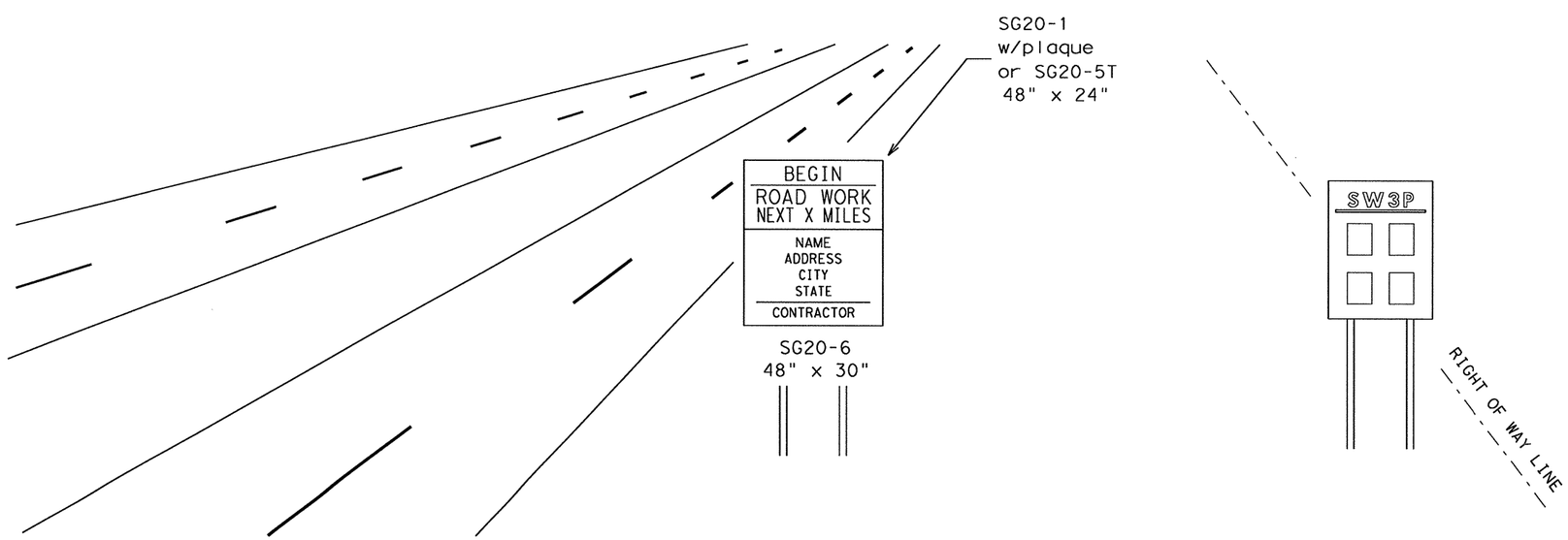

DEPARTMENT MATERIAL SPECIFICATIONS

PLYWOOD SIGN BLANKS	DMS-7100
FLAT SURFACE REFLECTIVE SHEETING	DMS-8300
VINYL NON-REFLECTIVE DECAL SHEETING	DMS-8320

COLOR	USAGE	REFLECTIVE SHEETING OR OTHER MATERIAL
BLUE	BACKGROUND	TYPE C (FLUORESCENT PRISMATIC)
WHITE	LEGEND & BORDERS	VINYL NON-REFLECTIVE DECAL SHEETING

Texas Department of Transportation
DALLAS DISTRICT STANDARD

SW3P
PROJECT LIMITS SIGN

FILE:	DN: TxDOT	CK:	DW:	CK:	
©TxDOT	DISTRICT	STATE PROJECT NO.			SHEET
REVISIONS	18	(SEE TITLE SHEET)			485
	COUNTY		CONTROL	SECT	JOB	HIGHWAY
	COLLIN		0091	04	055	SH289

DISCLAIMER:
The use of this standard is governed by the "Texas Engineering Practice Act". No warranty of any kind is made by TxDOT for any purpose whatsoever. TxDOT assumes no responsibility for the conversion of this standard to other formats or for incorrect results or damages resulting from its use.

LEVELS D1 D2 PATH:

R-201104-01

SEEDING FOR EROSION CONTROL

RECOMMENDED PLANTING SEASON	PERMANENT RURAL SEED MIX ITEM 164 DRILL SEEDING (PERM) (RURAL) (CLAY)	PERMANENT URBAN SEED MIX ITEM 164 DRILL SEEDING (PERM) (URBAN) (CLAY)	TEMPORARY DRILL SEED MIX ITEM 164 DRILL SEED(TEMP) (WARM OR COOL)
WARM SEASON Mar.15th, April, May, June, July, August, Sept. 15th	Pure Live Seed Rate Green Sprangletop (Leptochloa dubia) - 0.3 lbs/AC Bermudagrass (Cynodon dactylon) - 1.2 lbs/AC Sideoats Grama (El Reno)(Bouteloua curtipendula) - 2.7 lbs/AC Little Bluestem (Native)(Schizachyrium scoparium) - 2.0 lbs/AC Buffalograss (Texoka)(Buchloe dactyloides) - 1.6 lbs/AC Illinois Bundleflower (Desmanthus illinoensis) - 1.0 lbs/AC	Pure Live Seed Rate Green Sprangletop (Leptochloa dubia) - 0.3 lbs/AC Sideoats Grama (El Reno)(Bouteloua curtipendula) - 3.6 lbs/AC Buffalograss (Texoka)(Buchloe dactyloides) - 1.6 lbs/AC Bermudagrass (Cynodon dactylon) - 2.4 lbs/AC	Pure Live Seed Rate Foxtail Millet (Setaria italica) - 34 lbs/AC
COOL SEASON Sept 16th, Oct, Nov, Dec, Jan, Feb, Mar 14th			Pure Live Seed Rate Tall Fescue (Festuca arundinaceae) - 4.5 lbs/AC Western Wheatgrass (Agropyron smithii)- 5.6 lbs/AC Red Winter Wheat (Triticum aestivum) - 34 lbs/AC

SEEDING NOTES:

1. Refer to Item 164 of the Texas Standard Specifications for Construction of Highways, Streets, and Bridges 2004 for specifications, dimensions, volumes, and measurements that have been modified or not shown.
2. Apply seed upon completion of each construction stage (dependent on planting date requirements) without compensation for additional move-ins.
3. All seed will meet labelling, delivery, analysis, and testing requirements as described in Item 164.2(A).
4. Hydroseeding machines will not be allowed.
5. Fertilizer will be applied under Item 166 prior to seeding to help drill fertilizer into soil.
6. Refer to Item 166 Fertilizer this sheet for specifications.
7. All areas to be seeded will be cultivated to a depth as described in Item 164.3.
8. Seed will be drilled to a depth as described in Item164.3(D).
9. Vegetative watering will be paid for under Item 168 as shown on this sheet.
10. **BROADCAST SEEDING METHOD OF APPROPRIATE PERMANENT OR TEMPORARY SEED MIX MAY ONLY BE USED WHERE SITE CONDITIONS PREVENT DRILL SEEDING.**

FERTILIZER ITEM 166 FERTILIZER AC

FERTILIZER RATE

Unless otherwise stated in the plans, perform one soil analysis on each project before fertilization and submit results to the Engineer with recommended fertilizer rates based on soil analysis. Soil analysis maybe waived if both compost and sod are used on entire project.

FERTILIZER NOTES:

1. Refer to Item 166 of the Texas Standard Specifications for Construction of Highways, Streets, and Bridges 2004 for specifications, dimensions, volumes, and measurements that have been modified or not shown.
2. Fertilizer will be applied before seeding and sodding.
3. Fertilizer will be delivered in bags unless otherwise specified or approved prior to delivery. Bags will be clearly labeled showing contents. When non-bagged, loose fertilizer is approved, documentation will be required for each load of material delivered verifying authenticity of material.
4. Fertilizer will be granular and essentially dust free.
5. Do not exceed 60 lbs of Nitrogen per acre without consulting with the Engineer.

VEGETATIVE WATERING FOR SEED AND SOD ITEM 168 VEGETATIVE WATERING MG

WATERING SCHEDULE

MONTH	RATE	TIME SCHEDULE	TOTAL WATER
March, April, May, October	7000 gallons/acre per working day	Vegetative watering for seed shall begin on the day after rainfall described below and continue for 20 consecutive working days; vegetative watering for sod shall begin on the day the sod is placed and continue for a minimum of 15 consecutive working days.	140,000 gallons/acre (20 working days)
June, July, August, September	12,000 gallons/acre per working day		240,000 gallons/acre (20 working days)
November, December, January, February	1000 gallons/acre per working day	Vegetative watering for seed and/or sod shall begin on the day after placement for 15 consecutive working days	15,000 gallons/acre (15 working days)

Rate and frequency may be adjusted, with the approval of the Engineer, to meet site conditions (especially with sod).
For informational purposes only: 1,000 gallons equals 1 MG

VEGETATIVE WATERING NOTES:

1. Refer to Item 168 of the Texas Standard Specifications for Construction of Highways, Streets, and Bridges 2004 for specifications, dimensions, volumes, and measurements that have been modified or not shown.
2. **After drill seeding, postpone watering operations until the site receives at least 1/2" of natural rainfall in a single day. Use Vegetative Watering to keep the seed bed moist during germination; not to provide the initial watering.**
3. All watering equipment will have a metering device.
4. Water will be evenly distributed over entire area(s) designated for seeding and/or sodding.
5. If 1/4 inch or more of rainfall occurs on site on any given working day, no vegetative watering will be needed on that working day (Note: 1/4 inch rain equals 7000 gallons of water per acre).
6. **Should the Contractor fail to apply the specified amount of water within the time allowed any seed or sod in poor condition will be replaced, fertilized, and watered at the Contractor's expense.**

SODDING FOR EROSION CONTROL ITEM 162 BLOCK SOD (BERMUDA) SY

BLOCK OR ROLL SOD

COMMON NAME	BOTANICAL NAME
Common Bermuda Grass	Cynodon dactylon

SODDING NOTES:

1. Refer to Item 162 of the Texas Standard Specifications for Construction of Highways, Streets, and Bridges 2004 for specifications, dimensions, volumes, and measurements that have been modified or not shown.
2. All sod (blocks or rolls) will be placed within 24 hours of delivery to the site.
3. Sod will be placed only after soil preparation is complete and fertilizer has been applied to soil.
4. Sod blocks will be placed firmly against adjacent sod blocks.
5. Sod will be placed with joints alternating on each row to prevent all joints from lining up.
6. Vegetative watering will be paid for under Item 168 as shown on this sheet. Sod will be watered immediately following placement.

COMPOST APPLICATION ITEM 161 COMPOST MANF. TOPSOIL (BOS) (4") SY

APPLICATION RATE

A one inch uniform layer of compost will be placed on grade. The compost will then be incorporated into the existing soil (by till or disk) to a 3 to 4 inch depth.

COMPOST NOTES:

1. Refer to Item 161 - Compost for specifications, dimensions, volumes, and measurements that have been modified or not shown.
2. Erosion Control Compost (ECC) will be used to control erosion on slopes. ECC will be used in lieu of Soil Retention Blankets and other slope applications on slopes 3:1 and flatter. The ECC will be uniformly placed on the slope in a minimum one inch layer.
3. Filter berms will be placed in locations where concentration of flow may cause erosion - reference current Special Specification for Compost/Mulch Filter Berm.

ROADSIDE MOWING ITEM 730 PROJECT MAINTENANCE AC

Mowing will be included during project construction. Provide six mowing cycles per year during the project.

Once seed is established, mowing will be used to promote the warm season grasses by mowing the cool season and/or temporary grasses.

REQUIRED ITEMS:

- COMPOST MANUFACTURED TOPSOIL
- FERTILIZER TO BE USED WITH ALL SEEDING AND MOST SODDING.
- VEGETATIVE WATERING TO BE USED WITH ALL SEEDING AND SODDING.
- ONLY BROADCAST SEED IN AREAS THAT CANNOT DRILLED OR SODDED.

SEQUENCE OF WORK:

PREPARE SOIL WITH COMPOST
APPLY FERTILIZER
PLACE SEED AND/OR SOD
APPLY WATER FOR SEED AND SOD AREAS
MOW TO PROMOTE WARM SEASON GRASSES

Texas Department of Transportation ©

VEGETATION ESTABLISHMENT SHEET

(DALLAS DISTRICT)

DESIGN	FED.RD. DIV.NO.	STATE PROJECT NO.		HIGHWAY NO.
PJH	6	(See Title Sheet)		SH 289
GRAPHICS XXX	STATE	DISTRICT	COUNTY	SHEET NO.
CHECK XXX	TEXAS	DALLAS	COLLIN	486
REV 07/26/2010	CONTROL	SECTION	JOB	
	0091	04	055	

TEMPLATED REVISED: 10-23-02

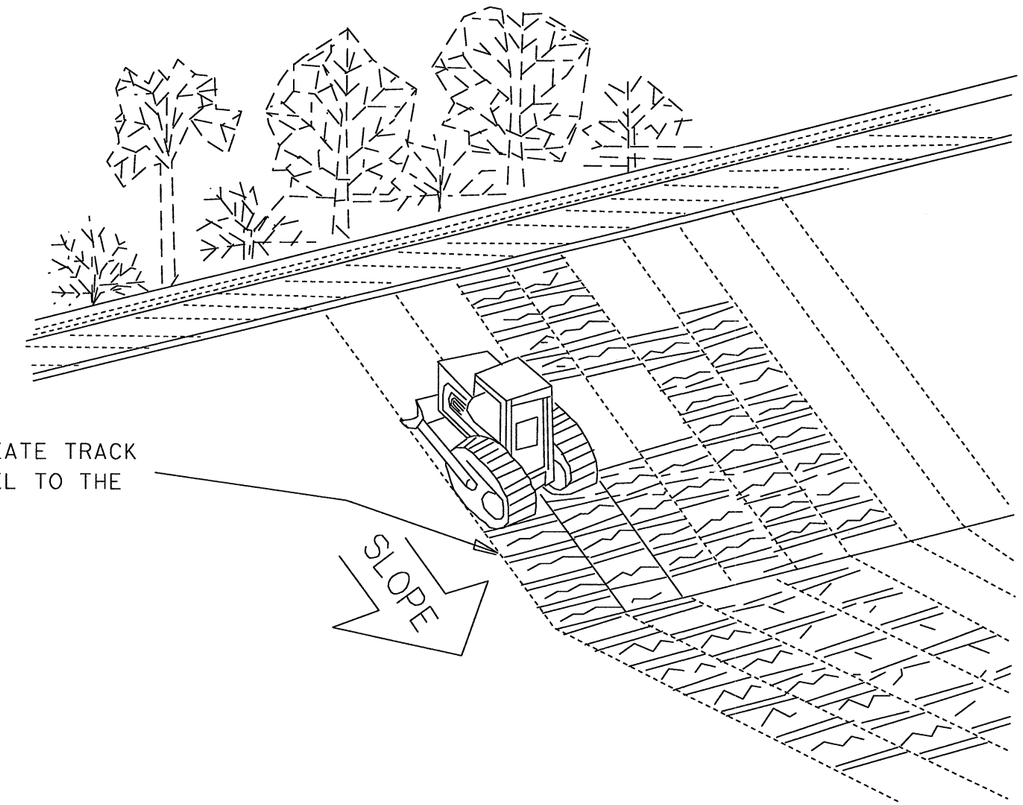

NOTE:

PERFORM VERTICAL TRACKING ON SLOPES TO TEMPORARILY STABILIZE SOIL. PROVIDE EQUIPMENT WITH A TRACK UNDERCARRIAGE CAPABLE OF PRODUCING LINEAR SOIL IMPRESSIONS MEASURING AT LEAST 12" IN LENGTH BY 2" TO 4" IN WIDTH BY 1/2" TO 2" IN DEPTH. DO NOT EXCEED 12" BETWEEN TRACK CLEATS. INSTALL CONTINOUS LINEAR TRACK IMPRESSIONS WHERE THE MINIMUM 12" IN LENGTH IS PERPENDICULAR TO THE DIRECTION OF WATER FLOW.

©2007 Texas Department of Transportation

Dallas District Standard

TEMPORARY EROSION, SEDIMENT AND WATER POLLUTION CONTROL MEASURES

VERTICAL TRACKING FOR EROSION CONTROL

FED. RD. DIV. NO.	PROJECT NUMBER		SHEET NUMBER
18	(SEE TITLE SHEET)		487
STATE	DISTRICT	COUNTY	
TEXAS	DALLAS	COLLIN	
CONTROL	SECTION	JOB	HIGHWAY NUMBER
0091	04	055	SH 289

FILENAME: T:\DALDONWA\SH 289 Collin\THE PLANS\Standards\100% ps&e TO BE ADDED TO INDEX\Vert-Track.dgn

This page intentionally left blank.