ENGINEERING PLANS FOR THE DEVELOPMENT OF

THE CYPRESS CREEK WAY

AND

WORTHINGTON WAY

LIGHT FARMS
ESTABLISHED 2012

HOMEGROWN COMMUNITY

COLLIN COUNTY, TEXAS

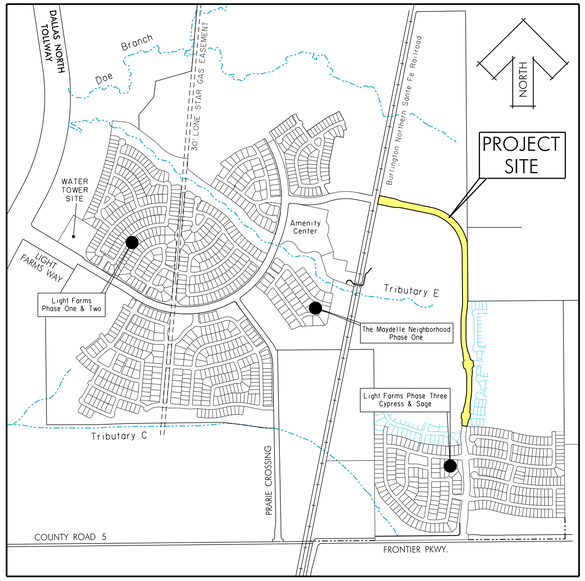

LOCATION MAP
NTS

RECORD DRAWING

THESE RECORD DOCUMENTS HAVE BEEN PREPARED BASED ON INFORMATION PROVIDED BY OTHERS. THE DESIGN PROFESSIONAL IS UNDER NO OBLIGATION OR DUTY TO VERIFY THE ACCURACY AND/OR COMPLETENESS OF THIS INFORMATION AND HAS NOT DONE SO. THE DESIGN PROFESSIONAL SHALL NOT BE RESPONSIBLE FOR ANY ERRORS OR OMISSION THAT MAY BE INCORPORATED AS A RESULT OF ERRONEOUS INFORMATION PROVIDED BY OTHERS.

STATE OF TEXAS
ROBERT M. STENGELE
50145
REGISTERED PROFESSIONAL ENGINEER
9-25-16

Huitt-Zollars, Inc.
Firm Registration No. F-761

Owner/Developer

LFC Land Company LLC

Tony Ruggeri
8401 North Central Expressway
Suite 350 Dallas, TX 75225
Phone 214-292-3410 Fax 214-292-3411

Prepared For:

COLLIN COUNTY MUNICIPAL UTILITY DISTRICT NO. 1

C/O Republic Property Group
8401 North Central Expressway
Suite 350 Dallas, TX 75225
Phone 214-292-3410 Fax 214-292-3411

Prepared By:

HUITT-ZOLLARS

1717 McKinney Ave., Suite 1400 Dallas, Texas 75202
Phone (214) 871-3311 Fax (214) 871-0757
Contact: Robert M. Stengele, P.E.
email: rstengele@huitt-zollars.com

00-01

I:/proj/0139050I/0I390552-CCW&WW-EXT/dgn/ccw-ww-cv01.dgn

P-201508-01

SHEET INDEX

SHEET ID	DESCRIPTION	REV #	DATE
	GENERAL		
00-01	COVER SHEET		
00-02	INDEX SHEET		
00-03	GENERAL NOTES (CITY)		
00-04	GENERAL NOTES (TCEQ)		
	PLAT		
01-01	CONSTRUCTION PLAT		
01-02	CONSTRUCTION PLAT		
	PAVING		
02-01	PAVING PLAN - CYPRESS CREEK WAY		
02-02	PAVING PLAN - CYPRESS CREEK WAY (CONT.) & WORTHINGTON WAY		
02-03	PAVING PLAN - WORTHINGTON WAY (CONT.)		
02-04	PAVING PLAN - WORTHINGTON WAY (CONT.)		
02-05	PAVING PLAN - WORTHINGTON WAY (CONT.)		
	EROSION CONTROL		
03-01	EROSION CONTROL PLAN		
03-02	EROSION CONTROL DETAILS		
	DRAINAGE AREA CALCULATIONS		
04-01	DRAINAGE AREA MAP		
04-02	DRAINAGE CALCULATIONS		
	STORM SEWER		
05-01	DRAINAGE CHANNEL - LINE A		
05-02	STORM SEWER PLAN & PROFILE - LINE A		
05-03	STORM SEWER PLAN & PROFILE - LINE A (CONT.)		
05-04	STORM SEWER PLAN & PROFILE - LINE A (CONT.)		
05-05	DRAINAGE CHANNEL - LINE B		
05-06	STORM SEWER PLAN & PROFILE - LINE B & C		
05-07	STORM SEWER PLAN & PROFILE - LINE D		
	WATER & SANITARY SEWER		
06-01	WATER PLAN		
06-02	WATER & SANITARY SEWER PLAN & PROFILE		
06-03	WATER PLAN & PROFILE		
	STRIPING AND SIGNAGE		
07-01	LIGHTING, SIGNAGE, STRIPING & SLEEVING PLAN		
07-02	LIGHTING, SIGNAGE, STRIPING & SLEEVING PLAN		
	DETAILS		
08-01	STREET SIGN DETAILS		
08-02	CITY OF CELINA STANDARD DETAILS - PAVING		
08-03	CITY OF CELINA STANDARD DETAILS - PAVING		
08-04	CITY OF CELINA STANDARD DETAILS - PAVING		
08-05	CITY OF CELINA STANDARD DETAILS - DRAINAGE		
08-06	CITY OF CELINA STANDARD DETAILS - DRAINAGE		
08-07	CITY OF CELINA STANDARD DETAILS - DRAINAGE		
08-08	CITY OF CELINA STANDARD DETAILS - WATER		
08-09	CITY OF CELINA STANDARD DETAILS - WATER		
08-10	CITY OF CELINA STANDARD DETAILS - WATER		
08-11	CITY OF CELINA STANDARD DETAILS - SANITARY SEWER		
08-12	CITY OF CELINA STANDARD DETAILS - SANITARY SEWER		
	TxDOT DETAILS		
FW-0	CONCRETE WINGWALLS WITH FLARED WINGS - 0 DEG. SKEW BOX CULVERTS		
CH-FW-0	CONCRETE WINGWALLS WITH FLARED WINGS - 0 DEG. SKEW PIPE CULVERTS		
MC-7-10	MULTIPLE BOX CULVERTS CAST-IN-PLACE 7' SPAN (1 OF 2)		
MC-7-10	MULTIPLE BOX CULVERTS CAST-IN-PLACE 7' SPAN (2 OF 2)		
MC-6-16	MULTIPLE BOX CULVERTS CAST-IN-PLACE 6' SPAN (1 OF 2)		
MC-6-16	MULTIPLE BOX CULVERTS CAST-IN-PLACE 6' SPAN (2 OF 2)		
MC-5-20	MULTIPLE BOX CULVERTS CAST-IN-PLACE 5' SPAN (1 OF 2)		
MC-5-20	MULTIPLE BOX CULVERTS CAST-IN-PLACE 5' SPAN (2 OF 2)		

STATE OF TEXAS
ROBERT M. STENGELE
50145
REGISTERED
PROFESSIONAL ENGINEER
3-25-26

Huitt-Zollars, Inc.
Firm Registration No. F-761

RECORD DRAWING

THESE RECORD DOCUMENTS HAVE BEEN PREPARED BASED ON INFORMATION PROVIDED BY OTHERS. THE DESIGN PROFESSIONAL IS UNDER NO OBLIGATION OR DUTY TO VERIFY THE ACCURACY AND/OR COMPLETENESS OF THIS INFORMATION AND HAS NOT DONE SO. THE DESIGN PROFESSIONAL SHALL NOT BE RESPONSIBLE FOR ANY ERRORS OR OMISSION THAT MAY BE INCORPORATED AS A RESULT OF ERRONEOUS INFORMATION PROVIDED BY OTHERS.

INDEX SHEET

LIGHT FARMS

LFC Land Company LLC

Collin County Municipal Utility District No. 1

COLLIN COUNTY, TEXAS

HUITT-ZOLLARS

DESIGN	CHECKED	DATE	SCALE	NOTES	JOB NO.	SHT. NO.
HZI	HZI		NA		01-3905-52	00-02

I:/proj/0139050I/0I390552-CCW&WW EXT/dgn/ccw-ww-index.dgn

City of Celina
CONSTRUCTION GENERAL NOTES

GENERAL

1. All construction shall be in accordance with the latest revision of the North Central Texas Council of Governments "Standard Specifications for Public Works Construction" including the Standard Drawings therein and the City of Celina's addendum thereto. Contractor shall have at least one set of approved Engineering Plans and Specifications on-site at all times.

2. Before beginning construction, the contractor shall prepare a construction sequence schedule. The construction schedule shall be such that there is minimum interference with traffic along or adjacent to the project.

3. Construction may not begin earlier than 7:00 A.M. on weekdays nor continue after dark without permission from the City of Celina. Construction on holidays and Saturday must be approved two days in advance. A fee of $300.00 a day for working on holidays and Saturday will be accessed payable to the city before work is performed. Work may not begin before 8:00 A.M. on holidays and Saturday and work on Sunday is prohibited without special permission and payment of fees.

4. Utilities shown on the plans were taken from field surveys and information provided by the utility companies. The completeness and the accuracy of this data is not guaranteed.

   The contractor is responsible for verifying the location of all underground utilities and structures and protecting them from damage during construction.

   It will be the responsibility of each contractor to protect all existing public and private utilities throughout the construction of this project. Contractor shall contact the appropriate utility companies for line locations prior to commencement of construction and shall assume full liability to those companies for any damages caused to their facilities.

DIG TESS	800-DIG-TESS
GCEC-TELECOM	903-482-7274
GCEC-ELECTRIC	903-821-3007
AT&T	972-569-3013
ATMOS ENERGY	972-881-4161
ATMOS ENERGY	214-341-9900
CROSSTEX ENERGY	817-570-6753
ONEOK	903-257-6594
COSERV-ELEC	940-321-7800
COSERV-GAS	940-321-7800
CITY OF CELINA	972-382-2682
TOWN OF PROSPER	972-347-9969
MARILEE SUD	972-382-3222
GRANDE	972-410-0583
SUDDEN LINK	469-853-0486

5. Work may not be backfilled or covered until City has inspected it.

6. Material testing shall be performed by an independent testing laboratory and paid for by the Contractor. The following material tests shall be provided by the Contractor:

   a. Embankment - One soil density test shall be performed at each location for each 500 C.Y. of backfill placed.
   b. Pavement Sub-grade - One gradation test (where lime stabilized) and one soil density test shall be performed for each 300 linear feet of pavement unless otherwise noted. Gradations must pass 100% through a 1¾" sieve and 60% through a #4 sieve.
   c. Utility Trench Backfill - One soil density test shall be performed at 300 feet intervals or as directed by the Inspector.
   d. Concrete Tests:
      (1). Compressive Strength - Four test cylinders shall be taken from a representative portion of the concrete being placed for every 150-cubic yards of concrete pavement placed, but in no case shall less than 2 sets of cylinders be taken from any one day's placement.
      (2). Air, slump and temperature tests shall be taken for every set of cylinders made. Concrete with a temperature above 95° F will be rejected.
      (3). Additional cylinders and/or tests may be required at the Inspector's discretion.

   The City shall select the location and depth of each soil density test unless otherwise directed.

7. All excavation on the project is unclassified.

8. Temporary erosion control shall be used to minimize the spread of silt and mud from the project on to existing streets, alleys, drainage ways and public and private property. Temporary erosion controls may include silt fences, rock check dams, stabilized construction entrances, straw bales, berms, dikes, swales, strips of undisturbed vegetation, check dams and other methods as required by the City Manager or his representative and shall conform to the Storm Water Quality Best Management Practices for Construction Activities as published by the North Central Texas Council of Governments and the City of Celina Erosion and Sediment Control Manual.

9. Finished slopes on public rights-of-way and easements shall not be steeper than 4:1. All slopes steeper than 6:1 shall be covered with erosion control matting and are hydro mulched and maintained by the contractor until grass covers all parts of the slope.

10. The contractor shall maintain two-way traffic at all times along the project.

11. Remove , salvage and replace all street and traffic control signs, which may be damaged by the construction of the project.

12. All trenching and excavation shall be performed in accordance with OSHA standards. Trench safety design will be the responsibility of the Contractor. Contractor shall submit a trench safety design approved by a professional engineer to the City for review prior to the start of any underground utility construction.

WATER

1. Water mains shall be AWWA C-900 or 905 PVC Class 200 unless otherwise noted. Minimum cover for waterlines is 48" below top of curb, 60" where no curbed street is present or as required to clear existing utilities, whichever is greater. Class B+ embedment unless otherwise noted.

2. All utility trench backfill shall be performed in 12" loose lifts and mechanically compacted with approved vibratory methods.

3. Marking tape shall be installed one foot above and over PVC water lines.

4. Fitting for PVC water lines shall be ductile iron and be encased in a polyethylene sheath.

5. All Mechanical Joints shall be restrained. (Mega-Lug etc.)

6. Valves, including tapping valves shall be resilient seat gate valves, unless noted otherwise.

WATER (Cont.)

7. All direct burial valves shall be provided with cast iron valve boxes with PVC stacks. Valve stacks shall be vertical and concentric with the valve stem. Stainless steel valve extensions are required on all valves where the operating nut is greater than 4 feet below finished grade.

8. Fire hydrants shall be Waterous or equal as directed or approved by the City of Celina on a case by case basis and field painted silver with bonnet and caps color-coded to pipe size.
   a. Six inch line - silver body with RED bonnet and caps.
   b. Eight inch line - silver body with BLUE bonnet and caps.
   c. Ten inch line - silver body with GREEN bonnet and caps.
   d. Twelve inch line - silver body with YELLOW bonnet and caps.

9. All exposed bolting on any buried equipment or material shall be stainless steel. Included are:
   a. Bonnet and stuffing box bolts on valves.
   b. Shoe bolts on fire hydrants.
   c. Flange bolts.
   d. "Cor-ten" mechanical joint "T" bolts are acceptable for direct burial service.

10. Depending on meter size; meter boxes shall be DFW37C-12-ISAF, DFW38C-14-ISAF, DFW65C-14-ISAF, or approved equal and shall incorporate the Celina logo in the lid.

11. One sample station shall be provided to the city for every 250 connections.

12. Provide 60" blue flat fiberglass valve markers.

PAVING

1. All embankments shall be compacted to 95% Standard Proctor density.

2. All streets and alleys shall be placed on lime stabilized sub grade with a lime content of not less than 7% or as approved by city engineer.

3. The minimum 28 day compressive strength of concrete street paving shall not be less than 4000 psi and shall be air entrained. Water may not be applied to the surface of concrete paving to improve workability.

4. All curb and gutter shall be integral with the pavement.

5. Parabolic crowns are required on all street pavements except on major thoroughfares where straight sections are required.

6. Streets and alleys shall be constructed with provisions for sidewalk ramps at all intersections.

DRAINAGE

1. Storm sewer pipe shall be reinforced concrete, Class III unless otherwise noted.

2. All structural concrete shall be Class "C" (3600 psi compressive strength at 28 days), air entrained.

3. The contractor shall install plugs in storm sewer lines or otherwise prevent mud from entering the storm sewer system during construction.

WATER AND SANITARY SEWER

1. Water mains shall be AWWA C-900 or 905 PVC Class 200 unless otherwise noted. Minimum cover for waterlines is 48" below top of curb, 60" where no curbed street is present or as required to clear existing utilities, whichever is greater. Class B-3 embedment unless otherwise noted.

2. All utility trench backfill shall be performed in 12" loose lifts and mechanically compacted with approved vibratory methods.

3. Marking tape shall be installed one foot above and over PVC water lines.

4. Fitting for PVC water lines shall be ductile iron and be encased in a polyethylene sheath.

5. All Mechanical Joints shall be restrained. (Mega-Lug etc.)

6. Valves, including tapping valves shall be resilient seat gate valves, unless noted otherwise.

7. All direct burial valves shall be provided with cast iron valve boxes with PVC stacks. Valve stacks shall be vertical and concentric with the valve stem. Stainless steel valve extensions are required on all valves where the operating nut is greater than 4 feet below finished grade.

8. Fire hydrants shall be Waterous or equal as directed or approved by the City of Celina on a case by case basis and field painted silver with bonnet and caps color-coded to pipe size.
   a. Six inch line - silver body with RED bonnet and caps.
   b. Eight inch line - silver body with BLUE bonnet and caps.
   c. Ten inch line - silver body with GREEN bonnet and caps.
   d. Twelve inch line - silver body with YELLOW bonnet and caps.

9. All exposed bolting on any buried equipment or material shall be stainless steel. Included are:
   a. Bonnet and stuffing box bolts on valves.
   b. Shoe bolts on fire hydrants.
   c. Flange bolts.
   d. "Cor-ten" mechanical joint "T" bolts are acceptable for direct burial service.

10. Depending on meter size; meter boxes shall be DFW37C-12-ISAF, DFW38C-14-ISAF, DFW65C-14-ISAF, or approved equal and shall incorporate the Celina logo in the lid.

11. One sample station shall be provided to the city for every 250 connections.

Sanitary sewer mains shall be SDR 35 PVC. Embedment shall be Class B+ unless otherwise noted.
   a. The contractor shall install and maintain watertight plugs in all connections to the City's sanitary sewer system until the City accepts the project.
   b. All sanitary sewer lines and manholes shall be leak tested before the project is accepted. Deflection testing of PVC sewer lines is required. Deflection shall be tested with a mandrel for 5% deflection.
   c. All sewer lines shall be video inspected with a copy of the video and station report submitted to the Inspector.
   d. Mandrel, Air Test and Video inspection shall not be performed until all utilities are complete, in place and backfilled.

Specifications are not meant to exclude any other manufacturer. Any specification may be replaced with an approved equal upon approval by the City of Celina.

STATE OF TEXAS
ROBERT M. STENGELE
50145
REGISTERED
PROFESSIONAL ENGINEER
3-23-16

Huitt-Zollars, Inc.
Firm Registration No. F-761

RECORD DRAWING

THESE RECORD DOCUMENTS HAVE BEEN PREPARED BASED ON INFORMATION PROVIDED BY OTHERS. THE DESIGN PROFESSIONAL IS UNDER NO OBLIGATION OR DUTY TO VERIFY THE ACCURACY AND/OR COMPLETENESS OF THIS INFORMATION AND HAS NOT DONE SO. THE DESIGN PROFESSIONAL SHALL NOT BE RESPONSIBLE FOR ANY ERRORS OR OMISSION THAT MAY BE INCORPORATED AS A RESULT OF ERRONEOUS INFORMATION PROVIDED BY OTHERS.

GENERAL NOTES (CITY)

LIGHT FARMS

LFC Land Company LLC

Collin County Municipal Utility District No. 1

COLLIN COUNTY, TEXAS

HUITT-ZOLLARS

DESIGN	CHECKED	DATE	SCALE	NOTES	JOB NO.	SHT. NO.
HZI	HZI		NA		01-3905-52	00-03

I:/proj/0139050I/0139052-CCW&WW EXT/dgn/ccw-ww-genotl.dgn

TCEQ
Water Distribution System
General Construction Notes

1. This water distribution system must be constructed in accordance with the current Texas Commission on Enviromental Quality (TCEQ) Rules and Regulations for Public Water Systems 30 Texas Administrative Code (TAC) Chapter 290 Subchapter D. When conflicts are noted with local standards, the more stringent requirement shall be applied. Construction for public water systems must always, at a minimum, meet TCEQ'S "Rules and Regulations for Public Water Systems.

2. An appointed engineer shall notify in writing the local TCEQ'S Regional Office when construction will start. Please keep in mind that upon completion of the water works project, the engineer or owner shall notify the commission's Water Supply Division, in writing, as to its completion and attest to the fact that the work has been completed essentially according to the plans and change orders on file with the commission as required in 30 TAC §290.39(h)(3).

3. All newly installed pipes and related products must conform to American National Standards Institute/National Sanitation Foundation (ANSI/NSF) Standard61-G and must be certified by an organization accredited by ANSI, as required by 30 TAC §290.44(a)(1).

4. All Plastic Pipe for use in public water systems must bear the National Sanitation Foundation Seal of Approval(NSF pw-G) and have an ASTM design pressure rating of at least 150 psi or a standard dimension ratio of 26 or less, as required by 30 TAC §290.44(a)(2).

5. No pipe which has been used for any purpose other than the conveyance of drinking water shall be accepted or relocated for use in any public drinking water supply, as required by 30 TAC §290.44(a)(3).

6. Water transmission and distribution lines shall be installed in accordance with the manufacturer's instructions. However, the top of the water line must be located below the frost line and in no case shall the top of the water line be less than 24 inches below ground surface, as required by 30 TAC §290.44(a)(4).

7. Pursuant to 30 TAC §290.44(a)(5). The hydrostatic leakage rate shall not exceed the amount allowed or recommended by the most current AWWA formulas for PVC pipe, cast iron and ductile iron pipe. Include the formulas in the notes on the plans.

   - The hydrostatic leakage rate for polyvinyl chloride (PVC) pipe and appurtenances shall not exceed the amount allowed or recommended by formulas in America Water Works Association (AWWA) C-605 as required in 30 TAC §290.44(a)(5). Please ensure that the formula for this calculation is correct and most current formula is in use;

$$[LD(P^{0.5})]/148{,}000$$

Where:

- Q = The quantity of makeup water in gallons per hour,
- L=The length of the pipe section being tested, in feet,
- D = the nominal diameter of the pipe in inches, and
- P = the average test pressure during the hydrostatic test in pounds per square inch (psi).

   - The hydrostatic leakage rate for ductile iron (DI) pipe and appurtenances shall not exceed the amount allowed or recommended by formulas in America Water Works Association (AWWA) C-600 as required in 30 TAC §290.44(a)(5). Please ensure that the formula for this calculation is correct and most current formula is in use;

$$[SD(P^{0.5})]/148{,}000$$

Where:

- L = The quantity of makeup water in gallons per hour,
- S=The length of the pipe section being tested, in feet,
- D = the nominal diameter of the pipe in inches, and
- P = the average test pressure during the hydrostatic test in pounds per square inch (psi).

8. Projects constructed on or after January 1, 2014 must comply with the changes to the Safe Drinking Water Act that reduce the maximum allowable lead content of pipes, pipe fittings, plumbing fittings, and fixtures to 0.25 percent.

9. The system must be designed to maintain a minimum pressure of 35 psi at all points within the distribution network at flow rates of at least 1.5 gallons per minute per connection. When the system is intended to provide firefighting capability, it must also be designed to maintain a minimum pressure of 20 psi under combined fire and drinking water flow conditions as required by 30 TAC §290.44(d).

10. The contractor shall install appropriate air release devices in the distribution system at all points where topography or other factors may create air locks in the lines. All vent openings to the atmosphere shall be covered with 16-mesh or finer, corrosion resistant screening material or an acceptable equivalent as required by 30 TAC §290.44(d)(1).

11. Pursuant to 30 TAC §290.44(d)(4), accurate water meters shall be provided. Service connections and meter locations should be shown on the plans.

12. Pursuant to 30 TAC §290.44(d)(5), sufficient valves and blowoffs to make repairs. The engineering report shall establish criteria for this design.

13. Pursuant to 30 TAC §290.44(d)(6), the system shall be designed to afford effective circulation of water with a minimum of dead ends. All dead-end mains shall be provided with acceptable flush valves and discharge piping. All dead-end lines less than two inches in diameter will not require flush valves if they end at a customer service. Where dead ends are necessary as a stage in the growth of the system, they shall be located and arranged to ultimately connect the ends to provide circulation

14. The contractor shall maintain a minimum separation distance in all directions of nine feet between the proposed waterline and wastewater collection facilities including manholes and septic tank drainfields. If this distance cannot be maintained, the contractor must immediately notify the project engineer for further direction. Separation distances, installation methods, and materials utilized must meet 30 TAC §290.44(e)(1-4) of the current rules.

15. Pursuant to 30 TAC §290.44(e) (5), the separation distance from a potable waterline to a wastewater main or lateral manhole or cleanout shall be a minimum of nine feet. Where the nine-foot separation distance cannot be achieved, the potable waterline shall be encased in a joint of at least 150 psi pressure class pipe at least 18 feet long and two nominal sizes larger than the new conveyance. The space around the carrier pipe shall be supported at five-foot intervals with spacers or be filled o the springline with washed sand. The encasement pipe shall be centered on the crossing and both ends sealed with cement grout or manufactured sealant.

16. Pursuant to 30 TAC §290.44(e)(6), fire hydrants shall not be installed within nine feet vertically or horizontally of any wastewater line, wastewater lateral, or wastewater service line regardless of construction.

17. Pursuant to 30 TAC §290.44(e)(7), suction mains to pumping equipment shall not cross wastewater mains, wastewater laterals, or wastewater service lines. Raw water supply lines shall not be installed within five feet of any tile or concrete wastewater main, wastewater lateral, or wastewater service line.

18. Pursuant to 30 TAC §290.44(e)(8), waterlines shall not be installed closer than ten feet to septic tank drainfields.

19. Pursuant to 30 TAC §290.44(f)(1), the contractor shall not place the pipe in water or where it can be flooded with water or sewage during its storage or installation.

20. Pursuant to 30 TAC §290.44(f)(2), when waterlines are laid under any flowing or intermittent stream or semi-permanent body of water the water main shall be installed in a separate watertight pipe encasement. Valves must be provided on each side of the crossing with facilities to allow the underwater portion of the system to be isolated and tested. Alternatively, and with the permission of the executive director, the watertight pipe encasement may be omitted.

21. The contractor shall disinfect the new water mains in accordance with AWWA Standard C-651 and then flush and sample the lines before being placed into service. Samples shall be collected for microbiological analysis to check the effectiveness of the disinfection procedure which shall be repeated if contamination persists. A minimum of one sample for each 1,000 feet of completed water line will be required or at the next available sampling point beyond 1,000 feet as designated by the design engineer, in accordance with 30 TAC §290.44(f)(3).

STATE OF TEXAS
ROBERT M. STENGELE
50145
REGISTERED
PROFESSIONAL ENGINEER
3-25-16

Huitt-Zollars, Inc.
Firm Registration No. F-761

RECORD DRAWING

THESE RECORD DOCUMENTS HAVE BEEN PREPARED BASED ON INFORMATION PROVIDED BY OTHERS. THE DESIGN PROFESSIONAL IS UNDER NO OBLIGATION OR DUTY TO VERIFY THE ACCURACY AND/OR COMPLETENESS OF THIS INFORMATION AND HAS NOT DONE SO. THE DESIGN PROFESSIONAL SHALL NOT BE RESPONSIBLE FOR ANY ERRORS OR OMISSION THAT MAY BE INCORPORATED AS A RESULT OF ERRONEOUS INFORMATION PROVIDED BY OTHERS.

GENERAL NOTES (TCEQ)

LIGHT FARMS

LFC Land Company LLC

Collin County Municipal Utility District No. 1

COLLIN COUNTY, TEXAS

HUITT-ZOLLARS

DESIGN	CHECKED	DATE	SCALE	NOTES	JOB NO.	SHT. NO.
HZI	HZI		NA		01-3905-52	00-04

I:/proj/0139050I/0I390552-CCW&WW EXT/dgn/ccw-ww-gen01.dgn

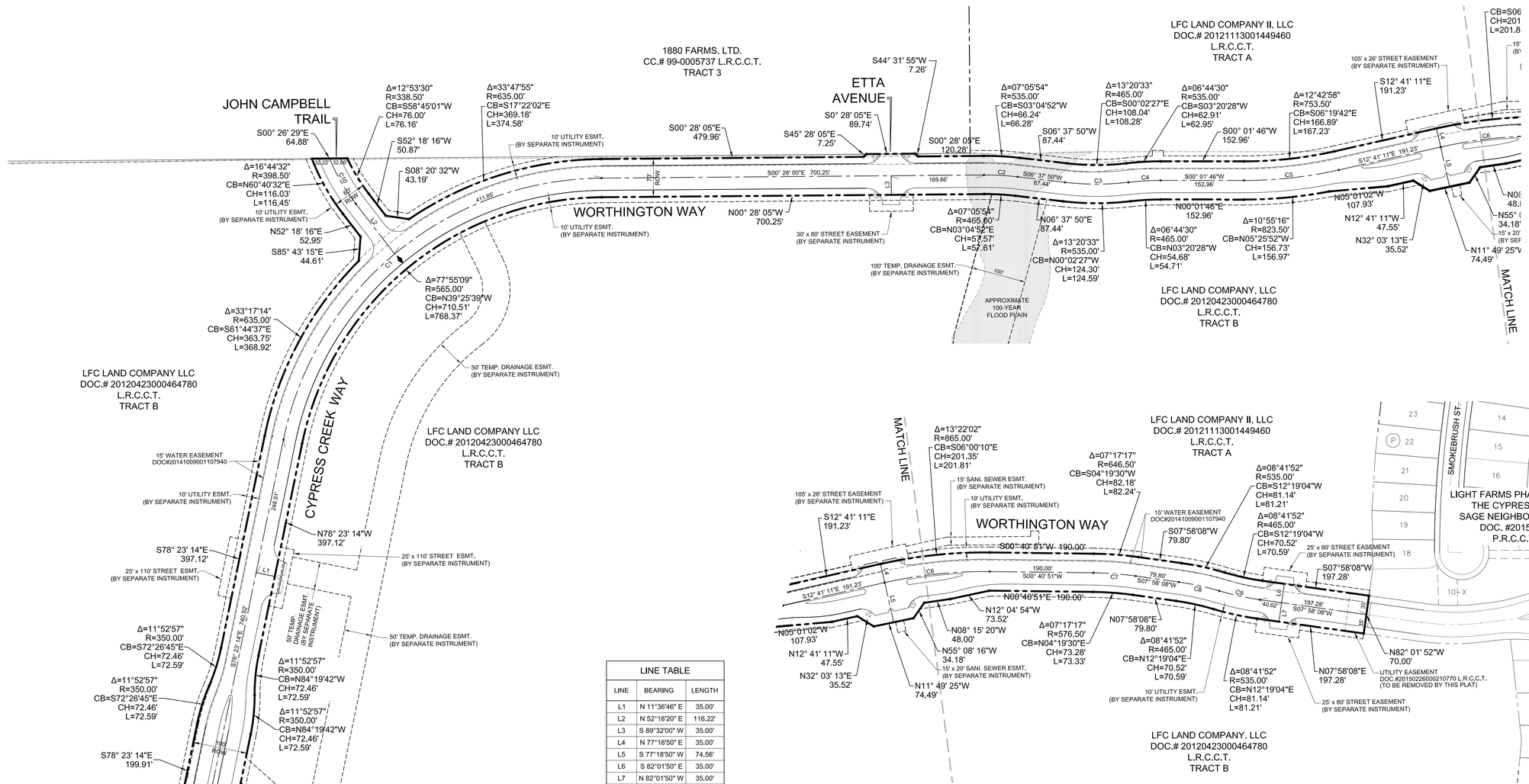

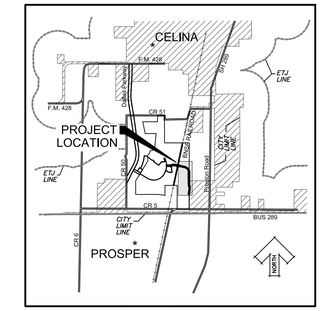

VICINITY MAP

0 50 100 200
SCALE IN FEET

LINE TABLE		
LINE	BEARING	LENGTH
L1	N 11°36'46" E	35.00'
L2	N 52°18'20" E	116.22'
L3	S 89°32'00" W	35.00'
L4	N 77°18'50" E	35.00'
L5	S 77°18'50" W	74.56'
L6	S 82°01'50" E	35.00'
L7	N 82°01'50" W	35.00'

CURVE TABLE					
CURVE	DELTA	RADIUS	LENGTH	CHORD	CHORD LENGTH
C1	77°55'09"	600.00'	815.97'	S39°25'39"W	754.53'
C2	7°05'54"	500.00'	61.95'	S3°04'52"E	61.91'
C3	13°20'33"	500.00'	116.43'	S0°02'27"E	116.17'
C4	6°44'30"	500.00'	58.83'	S3°20'28"W	58.80'
C5	12°42'58"	788.50'	175.00'	S6°19'42"E	174.64'
C6	13°22'02"	830.00'	193.64'	S6°00'10"W	193.20'
C7	7°17'17"	611.50'	77.78'	N4°19'30"E	77.73'
C8	8°41'52"	500.00'	75.90'	N12°19'04"E	75.83'
C9	8°41'52"	500.00'	75.90'	S12°19'04"W	75.83'
C10	14°59'13"	368.50'	96.39'	N59°47'52"E	96.11'

NOTES:

SELLING A PORTION OF THIS ADDITION BY METES AND BOUNDS IS A VIOLATION OF CITY ORDINANCE AND STATE LAW, AND IS SUBJECT TO FINES AND WITHHOLDING OF UTILITIES AND BUILDING PERMITS.

BENCHMARKS:

BM # 5 - Square cut on top of concrete headwall, 5' west of edge of pavement of Frontier Parkway, 56 feet south of centerline of County Road No. 5, 485 feet east of centerline County Road No. 51.
Elev. = 652.94

BM # 8 - Square cut northeast corner of concrete headwall, north side of County Road 5, 1200 feet (+/-) east of Intersection of County Road 5 and Frontier Parkway.
Elev. = 662.56

LEGEND

- IRF — IRON ROD FOUND
- IRF (HZ) — 5/8" IRON ROD FOUND WITH PLASTIC CAP STAMPED "HUITT-ZOLLARS"
- IRS — 5/8" IRON ROD SET W/ "HUITT-ZOLLARS" CAP
- WME — WALL MAINTENANCE EASEMENT
- UE — UTILITY EASEMENT
- ◆ — DENOTES STREET NAME CHANGE
- L.R.C.C.T. — LAND RECORDS, COLLIN COUNTY, TEXAS
- P.R.C.C.T. — PLAT RECORDS, COLLIN COUNTY, TEXAS

CONSTRUCTION PLAT

CYPRESS CREEK WAY & WORTHINGTON WAY

7.0357 ACRES

SITUATED IN THE

COLLIN COUNTY SCHOOL LAND SURVEY No. 14, ABST. No. 167

COLLIN COUNTY, TEXAS

CITY FILE No. CP13-XX

OWNER

COLLIN COUNTY MUNICIPAL UTILITY DISTRICT No. 1

C/O CRAWFORD & JORDAN, LLP, 19 Briar Hollow Lane, Suite 245, Houston, Texas 77027

DEVELOPER

LFC LAND COMPANY, LLC.

8401 North Central Expressway, Suite 350, Dallas, TX 75225
Phone 214-292-3410 Fax 214-292-3411

PREPARED BY:

HUITT-ZOLLARS

Huitt-Zollars, Inc. Dallas
1717 McKinney Avenue, Suite 1400, Dallas, TX 75202
Phone (214) 871-3311 Fax (214) 871-0757

NOVEMBER, 2015

1/2

DWG: I:\proj\013905\01\390501\1390552_CCW&WW EXT\dwg\CCW-WW_CONST PLAT.dwg USER: aloeffel
DATE: Nov 23, 2015 11:05am XREFS: LF-MASTER-BASE ccw-ww-base

CAD FILE PATH: I:\proj\013905\01\390501\1390552_ccw&ww ext\dwg\ccw-ww_const plat.dwg

PROJECT NUMBER: 01-3905-52

OWNERS CERTIFICATE
STATE OF TEXAS
COUNTY OF COLLIN

Whereas LFC Land Company LLC is the owner a tract of land in the Collin County School Land Survey No. 14, Abstract No. 167, Collin County, Texas, and being a portion of Tract B as described in instrument to LFC Land Company, LLC as recorded in Document No. 20120423000464780 of the Land Records of Collin County, Texas (L.R.C.C.T.), and being more particularly described as follows:

COMMENCING at a 5/8 inch iron rod set with plastic cap stamped "Huitt-Zollars" at the most westerly southwest corner of said LFC Land Company, LLC tract, said point being on the easterly right-of-way line (100' right-of-way) of the Burlington Northern Railroad (formerly Red River Texas & Southern Railway Co.) as recorded in Volume 121, Page 20 (L.R.C.C.T.);

THENCE, along the easterly right-of-way line of said Burlington Northern Railroad, North 11 degrees 20 minutes 28 seconds East, a distance of 2,074.02 feet to a 5/8 inch iron rod set with plastic cap stamped "Huitt-Zollars" at the POINT OF BEGINNING;

THENCE, continuing along the easterly right-of-way line of said Burlington Northern Railroad, North 11 degrees 20 minutes 28 seconds East, a distance of 100.00 feet to a 5/8 inch iron rod set with plastic cap stamped "Huitt-Zollars";

THENCE, departing the easterly right-of-way line of said Burlington Northern Railroad South 78 degrees 23 minutes 14 seconds East, a distance of 199.91 feet to a 5/8 inch iron rod set with plastic cap stamped "Huitt-Zollars" and being the beginning of a curve to the right having a central angle of 11 degrees 52 minutes 57 seconds, a radius of 350.00 feet, subtended by a 72.46 foot chord which bears South 72 degrees 26 minutes 45 seconds East;

THENCE, along said curve to the right an arc distance of 72.59 feet to a 5/8 inch iron rod set with plastic cap stamped "Huitt-Zollars" and being the beginning of a reverse curve to the left having a central angle of 11 degrees 52 minutes 57 seconds, a radius of 350.00 feet, subtended by a 72.46 foot chord which bears South 72 degrees 26 minutes 45 seconds East;

THENCE, along said curve to the left an arc distance of 72.59 feet to a 5/8 inch iron rod set with plastic cap stamped "Huitt-Zollars";

THENCE, South 78 degrees 23 minutes 14 seconds East, a distance of 397.12 feet to a 5/8 inch iron rod set with plastic cap stamped "Huitt-Zollars" and being the beginning of a non-tangent curve to the right having a central angle of 33 degrees 17 minutes 14 seconds, a radius of 635.00 feet, subtended by a 363.75 foot chord which bears South 61 degrees 44 minutes 37 seconds East;

THENCE, along said curve to the right an arc distance of 368.92 feet to a 5/8 inch iron rod set with plastic cap stamped "Huitt-Zollars";
THENCE, South 85 degrees 43 minutes 15 seconds East, a distance of 44.61 feet to a 5/8 inch iron rod set with plastic cap stamped "Huitt-Zollars";

THENCE, North 52 degrees 18 minutes 16 seconds East, a distance of 52.95 feet to a 5/8 inch iron rod set with plastic cap stamped "Huitt-Zollars" and being the beginning of a curve to the right having a central angle of 16 degrees 44 minutes 32 seconds, a radius of 398.50 feet, subtended by a 116.03 foot chord which bears North 60 degrees 40 minutes 32 seconds East;

THENCE, along said curve to the right an arc distance of 116.45 feet to a 5/8 inch iron rod set with plastic cap stamped "Huitt-Zollars";

THENCE, South 00 degrees 26 minutes 29 seconds East, a distance of 64.88 feet to a 5/8 inch iron rod set with plastic cap stamped "Huitt-Zollars" and being the beginning of a non-tangent curve to the left having a central angle of 12 degrees 53 minutes 30 seconds, a radius of 338.50 feet, subtended by a 76.00 foot chord which bears South 58 degrees 45 minutes 01 seconds West;

THENCE, along said curve to the left an arc distance of 76.16 feet to a 5/8 inch iron rod set with plastic cap stamped "Huitt-Zolllars";

THENCE, South 52 degrees 18 minutes 16 seconds West, a distance of 50.87 feet to a 5/8 inch iron rod set with plastic cap stamped "Huitt-Zollars";

THENCE, South 08 degrees 20 minutes 32 seconds West, a distance of 43.19 feet to a 5/8 inch iron rod set with plastic cap stamped "Huitt-Zollars" and being the beginning of a non-tangent curve to the right having a central angle of 33 degrees 47 minutes 55 seconds, a radius of 635.00 feet,subtended by a 369.18 foot chord which bears South 17 degrees 22 minutes 02 seconds East;

THENCE, along said curve to the right an arc distance of 374.58 feet to a 5/8 inch iron rod set with plastic cap stamped "Huitt-Zolllars";

THENCE, South 00 degrees 28 minutes 05 seconds East, a distance of 479.96 feet to a 5/8 inch iron rod set with plastic cap stamped "Huitt-Zollars";

THENCE, South 45 degrees 28 minutes 05 seconds East, a distance of 7.25 feet to a 5/8 inch iron rod set with plastic cap stamped "Huitt-Zollars";

THENCE, South 00 degrees 28 minutes 05 seconds East, a distance of 89.74 feet to a 5/8 inch iron rod set with plastic cap stamped "Huitt-Zollars";

THENCE, South 44 degrees 31 minutes 55 seconds West, a distance of 7.26 feet to a 5/8 inch iron rod set with plastic cap stamped "Huitt-Zollars";

THENCE, South 00 degrees 28 minutes 05 seconds East, a distance of 120.28 feet to a 5/8 inch iron rod set with plastic cap stamped "Huitt-Zollars" and being the beginning of a curve to the right having a central angle of 07 degrees 05 minutes 54 seconds, a radius of 535.00 feet, subtended by a 66.24 foot chord which bears South 03 degrees 04 minutes 52 seconds West;

THENCE, along said curve to the right an arc distance of 66.28 feet to a 5/8 inch iron rod set with plastic cap stamped "Huitt-Zollars";

THENCE, South 06 degrees 37 minutes 50 seconds West, a distance of 87.44 feet to a 5/8 inch iron rod set with plastic cap stamped "Huitt-Zollars" and being the beginning of a curve to the left having a central angle of 13 degrees 20 minutes 33 seconds, a radius of 465.00 feet, subtended by a 108.04 foot chord which bears South 00 degrees 02 minutes 27 seconds East;

THENCE, along said curve to the left an arc distance of 108.28 feet to a 5/8 inch iron rod set with plastic cap stamped "Huitt-Zollars" and being the beginning of a reverse curve to the right having a central angle of 06 degrees 44 minutes 30 seconds, a radius of 535.00 feet, subtended by a 62.91 foot chord which bears South 03 degrees 20 minutes 28 seconds East;

THENCE, along said curve to the right an arc distance of 62.95 feet to a 5/8 inch iron rod set with plastic cap stamped "Huitt-Zollars";

THENCE, South 00 degrees 01 minutes 46 seconds West, a distance of 152.96 feet to a 5/8 inch iron rod set with plastic cap stamped "Huitt-Zollars" and being the beginning of a curve to the left having a central angle of 12 degrees 42 minutes 58 seconds, a radius of 753.50 feet, subtended by a 166.89 foot chord which bears South 06 degrees 19 minutes 42 seconds East;

THENCE, along said curve to the left an arc distance of 167.23 feet to a 5/8 inch iron rod set with plastic cap stamped "Huitt-Zollars";

THENCE, South 12 degrees 41 minutes 11 seconds East, a distance of 191.23 feet to a 5/8 inch iron rod set with plastic cap stamped "Huitt-Zollars" and being the beginning of a curve to the right having a central angle of 13 degrees 22 minutes 02 seconds, a radius of 865.00 feet, subtended by a 201.35 foot chord which bears South 06 degrees 00 minutes 10 seconds East;

THENCE, along said curve to the right an arc distance of 201.81 feet to a 5/8 inch iron rod set with plastic cap stamped "Huitt-Zollars";

THENCE, South 00 degrees 40 minutes 51 seconds West, a distance of 190.00 feet to a 5/8 inch iron rod set with plastic cap stamped "Huitt-Zollars" and being the beginning of a curve to the right having a central angle of 07 degrees 17 minutes 17 seconds, a radius of 646.50 feet, subtended by a 82.18 foot chord which bears South 04 degrees 19 minutes 30 seconds West;

THENCE, along said curve to the right an arc distance of 82.24 feet to a 5/8 inch iron rod set with plastic cap stamped "Huitt-Zollars";

THENCE, South 07 degrees 58 minutes 08 seconds West, a distance of 79.80 feet to a 5/8 inch iron rod set with plastic cap stamped "Huitt-Zollars" and being the beginning of a curve to the right having a central angle of 08 degrees 41 minutes 52 seconds, a radius of 535.00 feet, subtended by a 81.14 foot chord which bears South 12 degrees 19 minutes 04 seconds West;

THENCE, along said curve to the right an arc distance of 81.21 feet to a 5/8 inch iron rod set with plastic cap stamped "Huitt-Zollars" and being the beginning of a reverse curve to the left having a central angle of 08 degrees 41 minutes 52 seconds, a radius of 465.00 feet, subtended by a 70.52 foot chord which bears South 12 degrees 19 minutes 04 seconds East;

THENCE, along said curve to the left an arc distance of 70.59 feet to a 5/8 inch iron rod set with plastic cap stamped "Huitt-Zollars";

THENCE, South 07 degrees 58 minutes 08 seconds West, a distance of 197.28 feet to a 5/8 inch iron rod set with plastic cap stamped "Huitt-Zollars";

THENCE, North 82 degrees 01 minutes 52 seconds West, a distance of 70.00 feet to a 5/8 inch iron rod set with plastic cap stamped "Huitt-Zollars";

THENCE, North 07 degrees 58 minutes 08 seconds East, a distance of 197.28 feet to a 5/8 inch iron rod set with plastic cap stamped "Huitt-Zollars" and being the beginning of a curve to the right having a central angle of 08 degrees 41 minutes 52 seconds, a radius of 535.00 feet, subtended by a 81.14 foot chord which bears North 12 degrees 19 minutes 04 seconds East;

THENCE, along said curve to the right an arc distance of 81.21 feet to a 5/8 inch iron rod set with plastic cap stamped "Huitt-Zollars" and being the beginning of a reverse curve to the left having a central angle of 08 degrees 41 minutes 52 seconds, a radius of 465.00 feet, subtended by a 70.52 foot chord which bears North 12 degrees 19 minutes 04 seconds East;

THENCE, along said curve to the left an arc distance of 70.59 feet to a 5/8 inch iron rod set with plastic cap stamped "Huitt-Zollars";

THENCE, North 07 degrees 58 minutes 08 seconds East, a distance of 79.80 feet to a 5/8 inch iron rod set with plastic cap stamped "Huitt-Zollars" and being the beginning of a curve to the left having a central angle of 07 degrees 17 minutes 17 seconds, a radius of 576.50 feet, subtended by a 73.28 foot chord which bears North 04 degrees 19 minutes 30 seconds East;

THENCE, along said curve to the left an arc distance of 73.33 feet to a 5/8 inch iron rod set with plastic cap stamped "Huitt-Zollars";

THENCE, North 00 degrees 40 minutes 51 seconds East, a distance of 190.00 feet to a 5/8 inch iron rod set with plastic cap stamped "Huitt-Zollars";

THENCE, North 12 degrees 04 minutes 54 seconds West, a distance of 73.52 feet to a 5/8 inch iron rod set with plastic cap stamped "Huitt-Zollars";

THENCE, North 08 degrees 15 minutes 20 seconds West, a distance of 48.00 feet to a 5/8 inch iron rod set with plastic cap stamped "Huitt-Zollars";
THENCE, North 55 degrees 08 minutes 16 seconds West, a distance of 34.18 feet to a 5/8 inch iron rod set with plastic cap stamped "Huitt-Zollars";

THENCE, North 11 degrees 49 minutes 25 seconds West, a distance of 74.49 feet to a 5/8 inch iron rod set with plastic cap stamped "Huitt-Zollars";

THENCE, North 32 degrees 03 minutes 13 seconds East, a distance of 35.52 feet to a 5/8 inch iron rod set with plastic cap stamped "Huitt-Zollars";

THENCE, North 12 degrees 41 minutes 11 seconds West, a distance of 47.55 feet to a 5/8 inch iron rod set with plastic cap stamped "Huitt-Zollars";

THENCE, North 05 degrees 01 minutes 02 seconds West, a distance of 107.93 feet to a 5/8 inch iron rod set with plastic cap stamped "Huitt-Zollars" and being the beginning of a non-tangent curve to the right having a central angle of 10 degrees 55 minutes 16 seconds, a radius of 823.50 feet, subtended by a 156.73 foot chord which bears North 05 degrees 25 minutes 52 seconds West;

THENCE, along said curve to the right an arc distance of 156.97 feet to a 5/8 inch iron rod set with plastic cap stamped "Huitt-Zollars";

THENCE, North 00 degrees 01 minutes 46 seconds East, a distance of 152.96 feet to a 5/8 inch iron rod set with plastic cap stamped "Huitt-Zollars" and being the beginning of a curve to the left having a central angle of 06 degrees 44 minutes 30 seconds, a radius of 465.00 feet, subtended by a 54.68 foot chord which bears North 03 degrees 20 minutes 28 seconds West;

THENCE, along said curve to the left an arc distance of 54.71 feet to a 5/8 inch iron rod set with plastic cap stamped "Huitt-Zollars" and being the beginning of a reverse curve to the right having a central angle of 13 degrees 20 minutes 33 seconds, a radius of 535.00 feet, subtended by a 124.30 foot chord which bears North 00 degrees 02 minutes 27 seconds West;

THENCE, along said curve to the right an arc distance of 124.59 feet to a 5/8 inch iron rod set with plastic cap stamped "Huitt-Zollars";

THENCE, North 06 degrees 37 minutes 50 seconds East, a distance of 87.44 feet to a 5/8 inch iron rod set with plastic cap stamped "Huitt-Zollars" and being the beginning of a curve to the left having a central angle of 07 degrees 05 minutes 54 seconds, a radius of 465.00 feet, subtended by a 57.57 foot chord which bears North 03 degrees 04 minutes 52 seconds East;

THENCE, along said curve to the left an arc distance of 57.61 feet to a 5/8 inch iron rod set with plastic cap stamped "Huitt-Zollars";

THENCE, North 00 degrees 28 minutes 05 seconds West, a distance of 700.25 feet to a 5/8 inch iron rod set with plastic cap stamped "Huitt-Zollars" and being the beginning of a curve to the left having a central angle of 77 degrees 55 minutes 09 seconds, a radius of 565.00 feet, subtended by a 710.51 foot chord which bears North 39 degrees 25 minutes 39 seconds West;

THENCE, along said curve to the left an arc distance of 768.37 feet to a 5/8 inch iron rod set with plastic cap stamped "Huitt-Zollars";

THENCE, North 78 degrees 23 minutes 14 seconds West, a distance of 397.12 feet to a 5/8 inch iron rod set with plastic cap stamped "Huitt-Zollars" and being the beginning of a curve to the left having a central angle of 11 degrees 52 minutes 57 seconds, a radius of 350.00 feet, subtended by a 72.46 foot chord which bears North 84 degrees 19 minutes 42 seconds West;

THENCE, along said curve to the left an arc distance of 72.59 feet to a 5/8 inch iron rod set with plastic cap stamped "Huitt-Zollars" and being the beginning of a reverse curve to the right having a central angle of 11 degrees 52 minutes 57 seconds, a radius of 350.00 feet, subtended by a 72.46 foot chord which bears North 84 degrees 19 minutes 42 seconds West;

THENCE, along said curve to the right an arc distance of 72.59 feet to a 5/8 inch iron rod set with plastic cap stamped "Huitt-Zollars";

THENCE, North 78 degrees 23 minutes 14 seconds West, a distance of 199.43 feet to the POINT OF BEGINNING and CONTAINING 7.0357 Acres of land, more or less.

NOW, THEREFORE, KNOW ALL MEN BY THESE PRESENTS:

That LFC LAND COMPANY, LLC acting herein by and through his(its) duly authorized officer(s), does hereby adopt this plat designating the herein above described property as CYPRESS CREEK WAY & WORTHINGTON WAY at LIGHT FARMS, additions within the extra-territorial jurisdiction of the City of Celina, Texas, and does hereby dedicate, in fee simple, to the public use forever, the streets, rights-of-way, and other public improvements shown thereon. The streets and alleys, if any, are dedicated for street purposes. The easements and public use areas, as shown, are dedicated, for the public use forever, for the purposes indicated on this plat. No buildings, fences, trees, shrubs or other improvements or growths shall be constructed or placed upon, over or across the easements as shown, except that landscape improvements may by placed in landscape easements, if approved by the City Council of the City of Celina. In addition, utility easements may also be used for the mutual use and accommodation of all public utilities desiring to use or using the same unless the easements limits the use to particular utilities, said use by public utilities being subordinate to the public's and City of Celina's use thereof. The City of Celina and public utilities entities shall have the right to remove and keep removed all or parts of any buildings, fences, trees, shrubs or other improvements or growths which may in any way endanger or interfere with the construction, maintenance, or efficiency of their respective systems in said easements, The City of Celina and public utility entities shall at all times have the full right of ingress and egress to or from their respective easements for the purpose of constructing, reconstructing, inspecting, patrolling, maintaining, reading meters, and adding to or removing all or parts of their respective systems without the necessity at any time procuring permission from anyone.

This plat approved subject to all platting ordinances, rules, regulations and resolutions of the City of Celina, Texas,

WITNESS, my hand, this the _____ day of _____ , 2016.

LFC Land Company, LLC

By: RJM/Celina III, L.P., manager

By: RJM/Celina III GP, Inc., general partner

_____
Tony Ruggeri, President

STATE OF TEXAS
COUNTY OF DALLAS
Before me, the undersigned authority, a Notary Public in and for the State of Texas, on this day personally appeared Tony Ruggeri, Owner, known to me to be the person whose name is subscribed to the foregoing instrument and acknowledged to me that he executed the same for the purpose and considerations therein expressed.

Given under my hand and seal of office, this _____ day of _____,2016.

_____
Notary Public in and for the State of Texas

_____
My Commission Expires On:

WITNESS, my hand, this the _____ day of _____ , 2016.

By:
_____
Keller Webster, President Collin County Municipal Utility District No. 1

STATE OF TEXAS
COUNTY OF DALLAS
Before me, the undersigned authority, a Notary Public in and for the State of Texas, on this day personally appeared Keller Webster, Owner, known to me to be the person whose name is subscribed to the foregoing instrument and acknowledged to me that he executed the same for the purpose and considerations therein expressed.

Given under my hand and seal of office, this_____day of _____,2016

_____
Notary Public in and for the State of Texas

_____
My Commission Expires On:

KNOW ALL MEN BY THESE PRESENTS:

THAT, I, Eric J. Yahoudy do hereby certify that I prepared this plat from an actual and accurate survey of the land and that the corner monuments shown thereon were properly placed under my personal supervision, in accordance with the subdivision regulations of the City of Celina, Texas.

PRELIMINARY, THIS DOCUMENT SHALL NOT BE RECORDED FOR ANY PURPOSE AND SHALL NOT BE USED OR VIEWED OR RELIED UPON AS A FINAL SURVEY DOCUMENT.

_____
Eric J. Yahoudy, Registered Professional Land Surveyor
Texas Registration No. 4862

Date _____

STATE OF TEXAS
COUNTY OF DALLAS

Before me, the undersigned authority, a Notary Public in and for the State of Texas, on this day personally appeared Eric J. Yahoudy, known to me to be the person whose name is subscribed to the foregoing instrument and acknowledged to me that he executed the same for the purpose and considerations therein expressed.

Given under my hand and seal of office, this _____ day of _____ , 2015.

Notary Public in and for the State of Texas _____

My Commission Expires On: _____

PROPERTY LOCATION STATEMENT
This property is located in the extraterritorial jurisdiction of the City of Celina, Collin County, Texas.

_____ _____
Signature of Mayor Date of approval

ATTEST:

_____ _____
City Secretary Date

Approved for preparation of final plat following construction of all public improvements (or appropriate sureties thereof) necessary for the subdivision shown on the plat.

RECOMMENDED BY:	Planning and Zoning Commission City of Celina, Texas
Signature of Chairperson	Date of Recommendation
APPROVED BY:	City Council City of Celina, Texas
Signature of Mayor	Date of Approval
ATTEST:	
City Secretary	Date

CONSTRUCTION PLAT

CYPRESS CREEK WAY & WORTHINGTON WAY

7.0357 ACRES

SITUATED IN THE

COLLIN COUNTY SCHOOL LAND SURVEY No. 14, ABST. No. 167

COLLIN COUNTY, TEXAS

CITY FILE No. CP13-XX

OWNER

COLLIN COUNTY MUNICIPAL UTILITY DISTRICT No. 1

C/O CRAWFORD & JORDAN, LLP, 19 Briar Hollow Lane, Suite 245, Houston, Texas 77027

DEVELOPER

LFC LAND COMPANY, LLC.

8401 North Central Expressway, Suite 350, Dallas, TX 75225
Phone 214-292-3410 Fax 214-292-3411

PREPARED BY:

HUITT-ZOLLARS

Huitt-Zollars, Inc. Dallas
1717 McKinney Avenue, Suite 1400, Dallas, TX 75202
Phone (214) 871-3311 Fax (214) 871-0757

NOVEMBER, 2015

2/2

DWG: I:\proj\013905101\13905052_CCW&WW EXT\dwg\CCW-WW_CONST PLAT.dwg USER: aloefiel
DATE: Nov 23, 2015 11:04am XREFS: LF-MASTER-BASE ccw-ww-base

CAD FILE PATH: I:\proj\013905101\13905052_ccw&ww ext\dwg\ccw-ww_const plat.dwg

PROJECT NUMBER: 01-3905-33

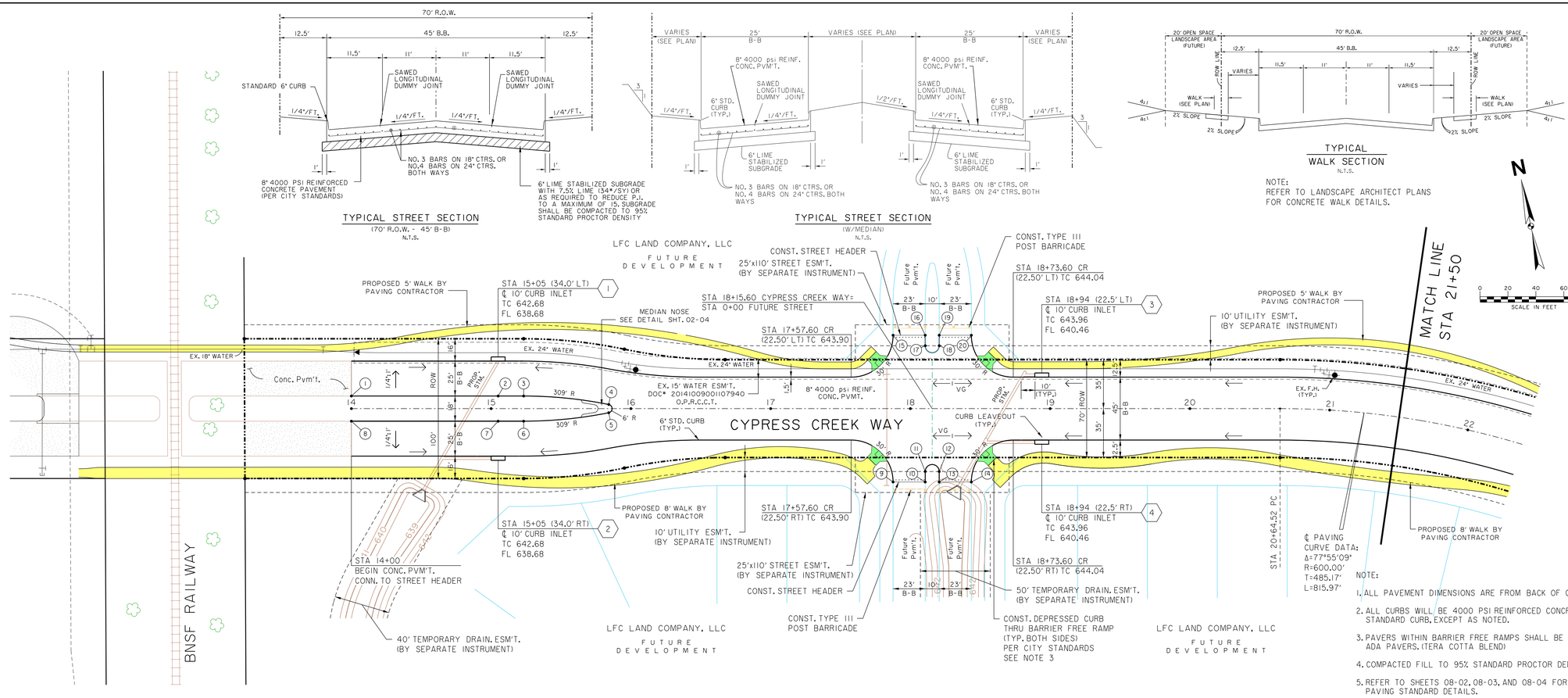

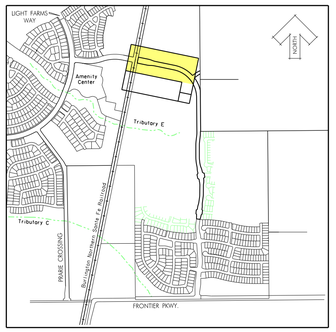

KEY MAP
NTS

NO.	STATION	OFFSET	ELEV.
1	14+00	(9' L)	TC 645.00
2	15+05.26	(9' L)	TC 643.20
3	15+23.26	(9' L)	TC 643.25
4	15+84.15	(2.94' L)	TC 643.55
5	15+84.15	(2.94' R)	TC 643.55
6	15+23.26	(9' R)	TC 643.25
7	15+05.26	(9' R)	TC 643.20
8	14+00	(9' R)	TC 645.00
9	17+87.60	(52.5' R)	TC 644.46
10	18+10.60	(52.5' R)	TP 644.94
11	18+10.60	(45.0' R)	TC 644.75
12	18+20.60	(45.0' R)	TC 644.75
13	18+20.60	(52.5' R)	TC 644.94
14	18+43.60	(52.5' R)	TC 644.46
15	17+87.60	(52.5' L)	TC 644.46
16	18+10.60	(52.5' L)	TC 644.94
17	18+10.60	(45.0' L)	TC 644.75
18	18+20.60	(45.0' L)	TC 644.75
19	18+20.60	(52.5' L)	TC 644.94
20	18+43.60	(52.5' L)	TC 644.46

NOTE:

1. ALL PAVEMENT DIMENSIONS ARE FROM BACK OF CURB.
2. ALL CURBS WILL BE 4000 PSI REINFORCED CONCRETE STANDARD CURB, EXCEPT AS NOTED.
3. PAVERS WITHIN BARRIER FREE RAMPS SHALL BE PAVESTONE ADA PAVERS. (TERA COTTA BLEND)
4. COMPACTED FILL TO 95% STANDARD PROCTOR DENSITY.
5. REFER TO SHEETS 08-02, 08-03, AND 08-04 FOR PAVING STANDARD DETAILS.

BENCHMARKS:

BM #5
Square cut on top concrete headwall, 5' west of edge of pavement of Frontier Parkway, 56 feet south of centerline of County Road No. 5, 485 feet east of centerline County Road No. 51.

N=7147548.47
E=2488493.86
Elev. = 652.94

BM #8
Square cut northeast corner of concrete headwall, north side of County Road 5, 1200 feet +- east of the intersection of County Road 5 and Frontier Parkway.
Elev. = 662.56

STATE OF TEXAS
ROBERT M. STENGELE
50145
REGISTERED PROFESSIONAL ENGINEER
3-25-16

Huitt-Zollars, Inc.
Firm Registration No. F-761

RECORD DRAWING

THESE RECORD DOCUMENTS HAVE BEEN PREPARED BASED ON INFORMATION PROVIDED BY OTHERS. THE DESIGN PROFESSIONAL IS UNDER NO OBLIGATION OR DUTY TO VERIFY THE ACCURACY AND/OR COMPLETENESS OF THIS INFORMATION AND HAS NOT DONE SO. THE DESIGN PROFESSIONAL SHALL NOT BE RESPONSIBLE FOR ANY ERRORS OR OMISSION THAT MAY BE INCORPORATED AS A RESULT OF ERRONEOUS INFORMATION PROVIDED BY OTHERS.

PAVING PLAN & PROFILE
STA. 14+00 TO STA. 21+50

LIGHT FARMS

LFC Land Company LLC

Collin County Municipal Utility District No. 1

COLLIN COUNTY, TEXAS

HUITT-ZOLLARS

DESIGN	CHECKED	DATE	SCALE	NOTES	JOB NO.	SHT. NO.
HZI	HZI		H: 1"=40' V: 1"= 5'		01-3905-52	02-01

CYPRESS CREEK WAY

P-201508-01

I:/proj/01390501/01390552-CCW&WW EXT/dgn/ccw-ww-pv01.dgn

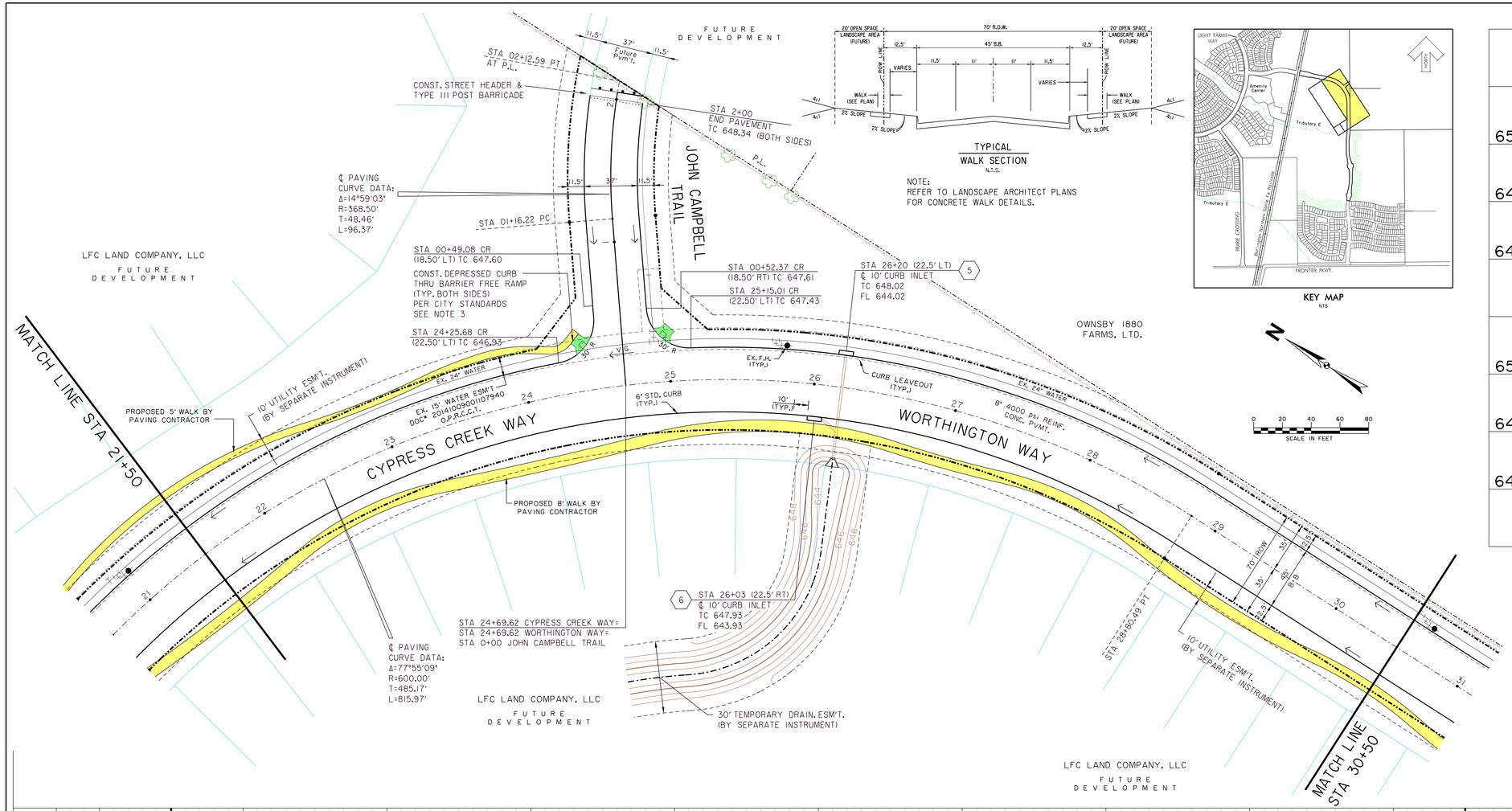

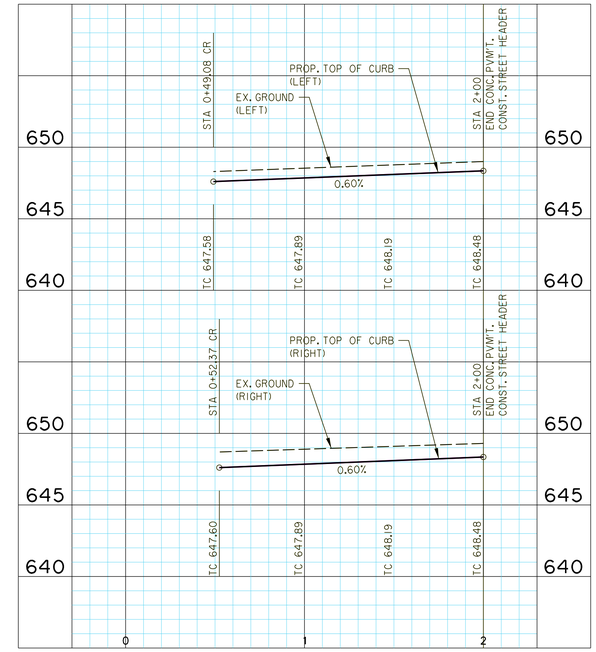

J.C. TRAIL

NOTE:

1. ALL PAVEMENT DIMENSIONS ARE FROM BACK OF CURB.
2. ALL CURBS WILL BE 4000 PSI REINFORCED CONCRETE STANDARD CURB, EXCEPT AS NOTED.
3. PAVERS WITHIN BARRIER FREE RAMPS SHALL BE PAVESTONE ADA PAVERS. (TERA COTTA BLEND)
4. COMPACTED FILL TO 95% STANDARD PROCTOR DENSITY.
5. REFER TO SHEETS 08-02, 08-03, AND 08-04 FOR PAVING STANDARD DETAILS.

BENCHMARKS:

BM #5
Square cut on top concrete headwall, 5' west of edge of pavement of Frontier Parkway, 56 feet south of centerline of County Road No. 5, 485 feet east of centerline County Road No. 51.

N=7147548.47
E=2488493.86
Elev. = 652.94

BM #8
Square cut northeast corner of concrete headwall, north side of County Road 5, 1200 feet +- east of the intersection of County Road 5 and Frontier Parkway.
Elev. = 662.56

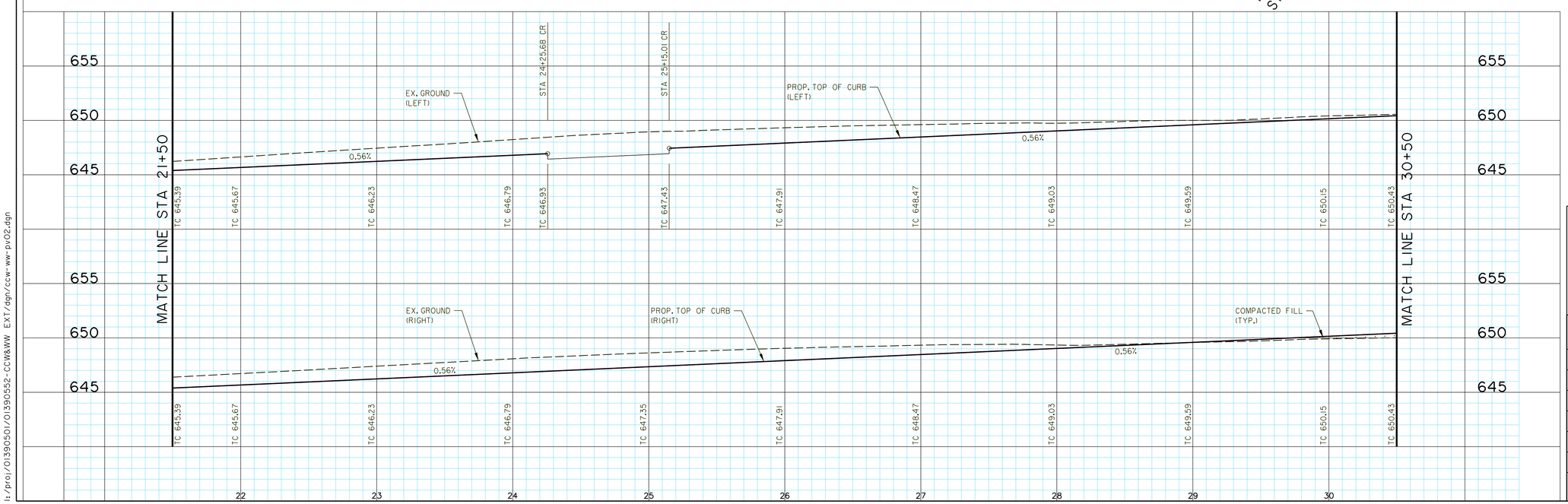

ROBERT M. STENGELE 50145 REGISTERED PROFESSIONAL ENGINEER STATE OF TEXAS
3-25-16

Huitt-Zollars, Inc.
Firm Registration No. F-761

RECORD DRAWING

THESE RECORD DOCUMENTS HAVE BEEN PREPARED BASED ON INFORMATION PROVIDED BY OTHERS. THE DESIGN PROFESSIONAL IS UNDER NO OBLIGATION OR DUTY TO VERIFY THE ACCURACY AND/OR COMPLETENESS OF THIS INFORMATION AND HAS NOT DONE SO. THE DESIGN PROFESSIONAL SHALL NOT BE RESPONSIBLE FOR ANY ERRORS OR OMISSION THAT MAY BE INCORPORATED AS A RESULT OF ERRONEOUS INFORMATION PROVIDED BY OTHERS.

PAVING PLAN & PROFILE
STA. 21+50 TO STA. 30+50

LIGHT FARMS

LFC Land Company LLC

Collin County Municipal Utility District No. 1

COLLIN COUNTY, TEXAS

HUITT-ZOLLARS

DESIGN	CHECKED	DATE	SCALE	NOTES	JOB NO.	SHT. NO.
HZI	HZI		H: 1"=40' V: 1"= 5'		01-3905-52	02-02

I:/proj/01390501/01390552-CCW&WW EXT/dgn/ccw-ww-pv02.dgn

CYPREES CREEK WAY (CONT.) & WORTHINGTON WAY P-201508-01

TYPICAL
WALK SECTION
N.T.S.

NO.	STATION	OFFSET	ELEV.
1	33+94.87	(54.46' R)	TC 650.04
2	34+25.81	(56.48' R)	TC 650.04
3	33+89.31	(35.0' L)	TC 650.90
4	34+31.58	(35.0' L)	TC 650.90

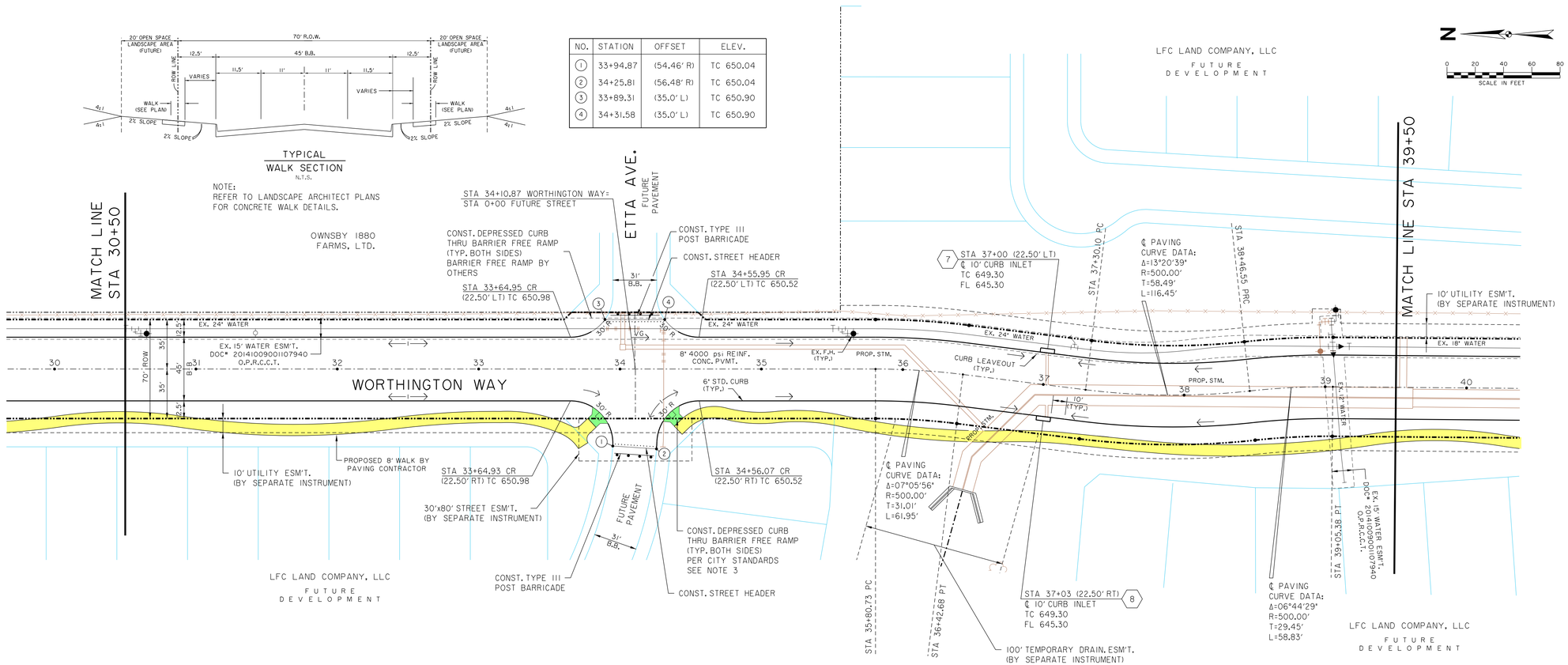

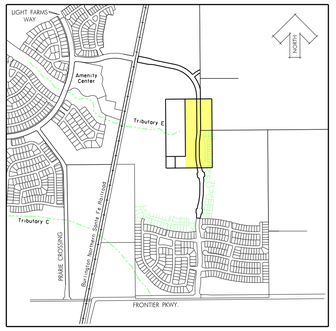

KEY MAP
NTS

NOTE:

1. ALL PAVEMENT DIMENSIONS ARE FROM BACK OF CURB.
2. ALL CURBS WILL BE 4000 PSI REINFORCED CONCRETE STANDARD CURB, EXCEPT AS NOTED.
3. PAVERS WITHIN BARRIER FREE RAMPS SHALL BE PAVESTONE ADA PAVERS. (TERA COTTA BLEND)
4. COMPACTED FILL TO 95% STANDARD PROCTOR DENSITY.
5. REFER TO SHEETS 08-02, 08-03, AND 08-04 FOR PAVING STANDARD DETAILS.

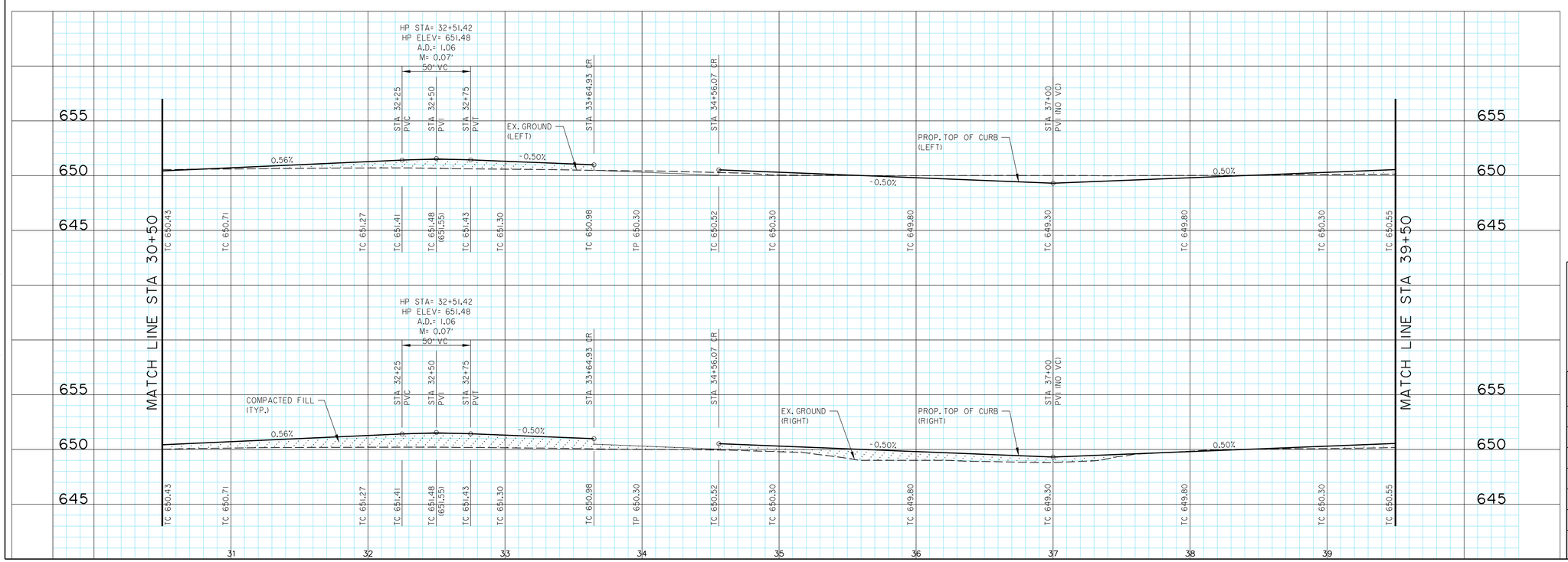

BENCHMARKS:

BM #5
Square cut on top concrete headwall, 5' west of edge of pavement of Frontier Parkway, 56 feet south of centerline of County Road No. 5, 485 feet east of centerline County Road No. 51.

N=7147548.47
E=2488493.86
Elev. = 652.94

BM #8
Square cut northeast corner of concrete headwall, north side of County Road 5, 1200 feet +- east of the intersection of County Road 5 and Frontier Parkway.
Elev. = 662.56

STATE OF TEXAS
ROBERT M. STENGELE
50145
REGISTERED PROFESSIONAL ENGINEER
3-25-16

Huitt-Zollars, Inc.
Firm Registration No. F-761

RECORD DRAWING

THESE RECORD DOCUMENTS HAVE BEEN PREPARED BASED ON INFORMATION PROVIDED BY OTHERS. THE DESIGN PROFESSIONAL IS UNDER NO OBLIGATION OR DUTY TO VERIFY THE ACCURACY AND/OR COMPLETENESS OF THIS INFORMATION AND HAS NOT DONE SO. THE DESIGN PROFESSIONAL SHALL NOT BE RESPONSIBLE FOR ANY ERRORS OR OMISSION THAT MAY BE INCORPORATED AS A RESULT OF ERRONEOUS INFORMATION PROVIDED BY OTHERS.

PAVING PLAN & PROFILE
STA. 30+50 TO STA. 39+50

LIGHT FARMS

LFC Land Company LLC

Collin County Municipal Utility District No. 1

COLLIN COUNTY, TEXAS

HUITT-ZOLLARS

DESIGN	CHECKED	DATE	SCALE	NOTES	JOB NO.	SHT. NO.
HZI	HZI		H: 1"=40' V: 1"= 5'		01-3905-52	02-03

I:/proj/01390501/01390552-CCW&WW EXT/dgn/ccw-ww-pv03.dgn

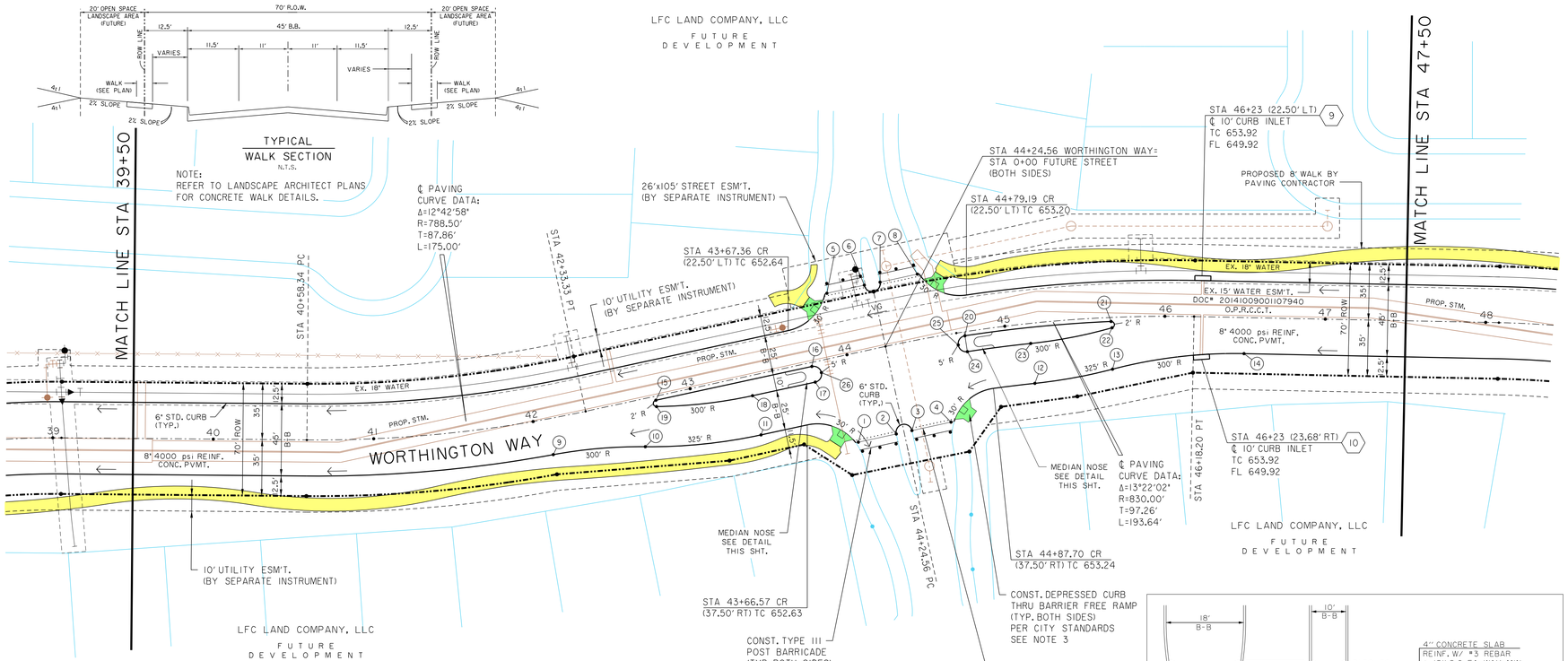

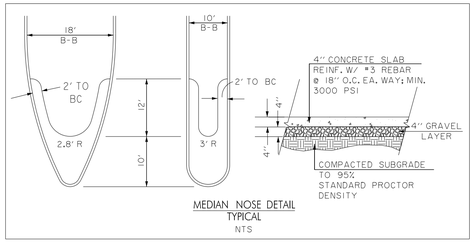

NO.	STATION	OFFSET	ELEV.
1	43+93.74	(54.76' R)	TC 652.49
2	44+19.57	(54.76' R)	TC 652.80
3	44+29.92	(54.75' R)	TC 652.80
4	44+58.73	(54.11' R)	TC 652.49
5	43+94.69	(40.12' L)	TC 653.30
6	44+19.73	(40.12' L)	TC 653.30
7	44+29.49	(39.88' L)	TC 653.30
8	44+53.20	(40.38' L)	TC 653.30
9	42+08.63	(22.50' R)	TC 651.84
10	42+65.03	(29.42' R)	TC 652.13
11	43+37.06	(37.50' R)	TC 652.49
12	45+14.94	(37.50' R)	TC 653.37
13	45+66.00	(32.27' R)	TC 653.62
14	46+49.79	(22.50' R)	TC 654.05
15	42+77.56	(2.50' R)	TC 652.71
16	43+77.06	(2.50' R)	TC 653.18
17	43+77.06	(12.50' R)	TC 653.20
18	43+37.06	(12.50' R)	TC 653.01
19	42+77.17	(6.46' R)	TC 652.68
20	44+74.53	(2.50' R)	TC 653.70
21	45+66.36	(2.50' R)	TC 654.15
22	45+66.83	(6.45' R)	TC 654.17
23	45+14.94	(12.50' R)	TC 653.89
24	44+74.53	(12.50' R)	TC 653.70
25	44+69.48	(7.50' R)	TC 653.80
26	43+82.06	(7.50' R)	TC 653.30

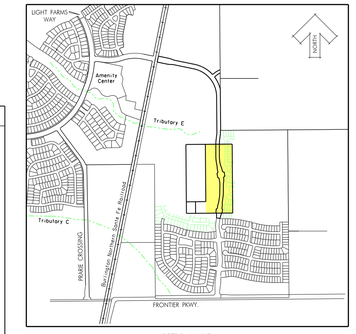

KEY MAP
NTS

NOTE:

1. ALL PAVEMENT DIMENSIONS ARE FROM BACK OF CURB.
2. ALL CURBS WILL BE 4000 PSI REINFORCED CONCRETE STANDARD CURB, EXCEPT AS NOTED.
3. PAVERS WITHIN BARRIER FREE RAMPS SHALL BE PAVESTONE ADA PAVERS. (TERA COTTA BLEND)
4. COMPACTED FILL TO 95% STANDARD PROCTOR DENSITY.
5. REFER TO SHEETS 08-02, 08-03, AND 08-04 FOR PAVING STANDARD DETAILS.

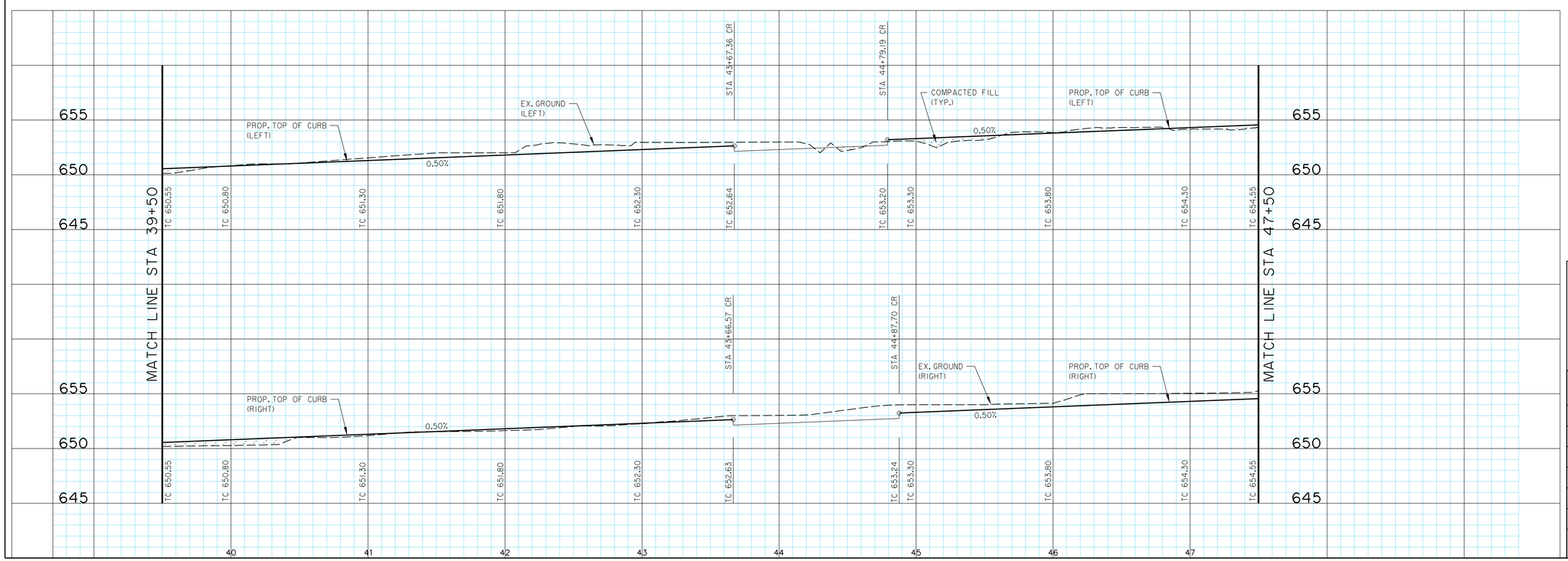

BENCHMARKS:

BM #5
Square cut on top concrete headwall, 5' west of edge of pavement of Frontier Parkway, 56 feet south of centerline of County Road No. 5, 485 feet east of centerline County Road No. 51.

N=7147548.47
E=2488493.86
Elev. = 652.94

BM #8
Square cut northeast corner of concrete headwall, north side of County Road 5, 1200 feet +- east of the intersection of County Road 5 and Frontier Parkway.
Elev. = 662.56

STATE OF TEXAS
ROBERT M. STENGELE
50145
REGISTERED PROFESSIONAL ENGINEER
3-25-16

Huitt-Zollars, Inc.
Firm Registration No. F-761

RECORD DRAWING

THESE RECORD DOCUMENTS HAVE BEEN PREPARED BASED ON INFORMATION PROVIDED BY OTHERS. THE DESIGN PROFESSIONAL IS UNDER NO OBLIGATION OR DUTY TO VERIFY THE ACCURACY AND/OR COMPLETENESS OF THIS INFORMATION AND HAS NOT DONE SO. THE DESIGN PROFESSIONAL SHALL NOT BE RESPONSIBLE FOR ANY ERRORS OR OMISSION THAT MAY BE INCORPORATED AS A RESULT OF ERRONEOUS INFORMATION PROVIDED BY OTHERS.

PAVING PLAN & PROFILE
STA. 39+50 TO STA. 47+50

LIGHT FARMS

LFC Land Company LLC

Collin County Municipal Utility District No. 1

COLLIN COUNTY, TEXAS

HUITT-ZOLLARS

DESIGN	CHECKED	DATE	SCALE	NOTES	JOB NO.	SHT. NO.
HZI	HZI		H: 1"=40' V: 1"= 5'		01-3905-52	02-04

WORTHINGTON WAY (Cont.)

P-201508-01

I:/proj/01390501/01390552-CCW&WW EXT/dgn/ccw-ww-pv04.dgn

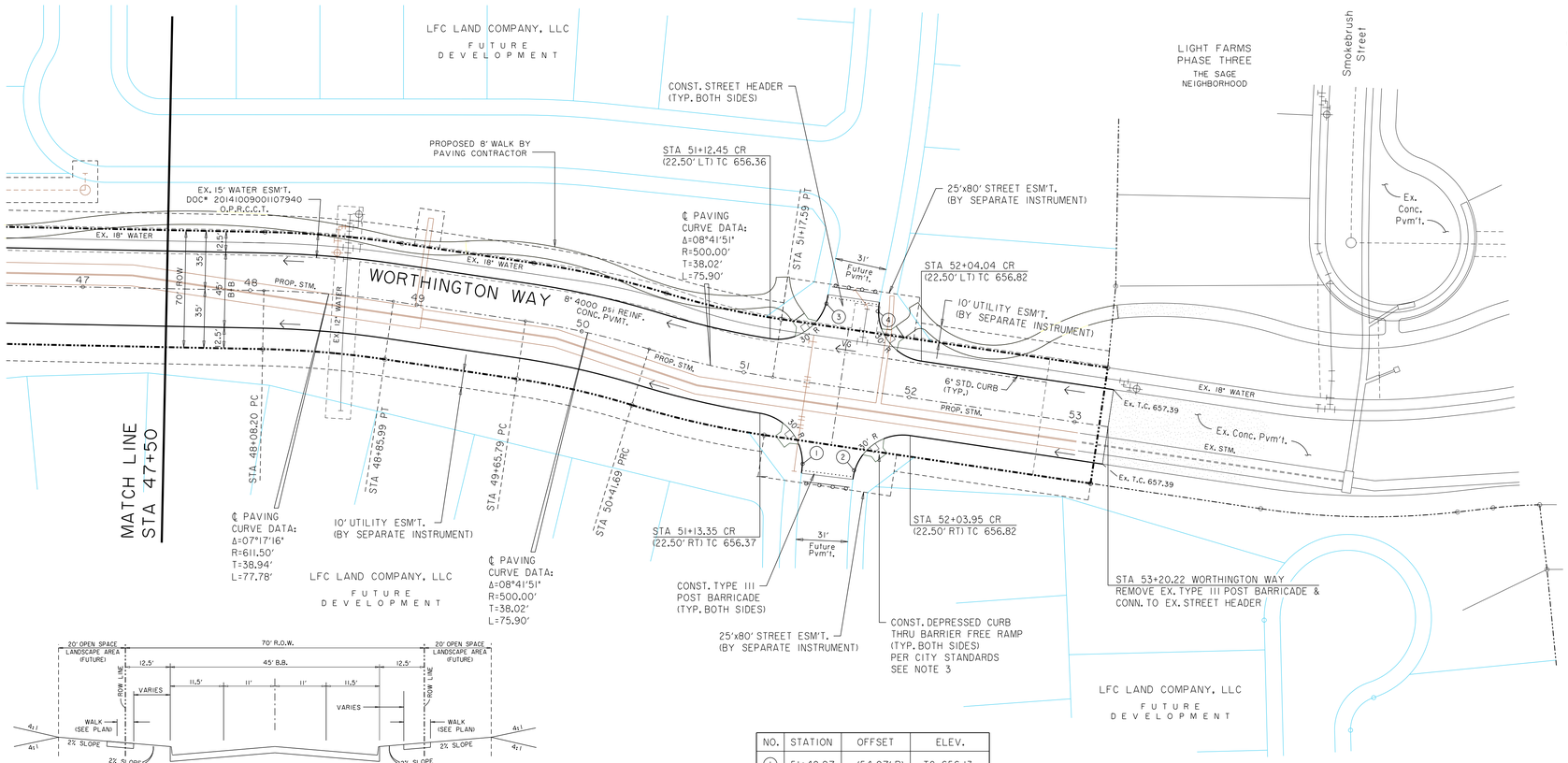

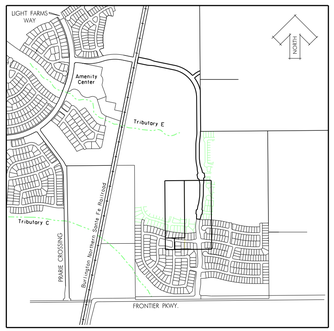

KEY MAP
NTS

TYPICAL
WALK SECTION
N.T.S.

NOTE:
REFER TO LANDSCAPE ARCHITECT PLANS FOR CONCRETE WALK DETAILS.

NO.	STATION	OFFSET	ELEV.
1	51+42.97	(54.07' R)	TC 656.13
2	51+73.96	(53.43' R)	TC 656.13
3	51+42.84	(52.50' L)	TC 657.00
4	51+73.89	(52.50' L)	TC 657.00

NOTE:

1. ALL PAVEMENT DIMENSIONS ARE FROM BACK OF CURB.
2. ALL CURBS WILL BE 4000 PSI REINFORCED CONCRETE STANDARD CURB, EXCEPT AS NOTED.
3. PAVERS WITHIN BARRIER FREE RAMPS SHALL BE PAVESTONE ADA PAVERS. (TERA COTTA BLEND)
4. COMPACTED FILL TO 95% STANDARD PROCTOR DENSITY.
5. REFER TO SHEETS 08-02, 08-03, AND 08-04 FOR PAVING STANDARD DETAILS.

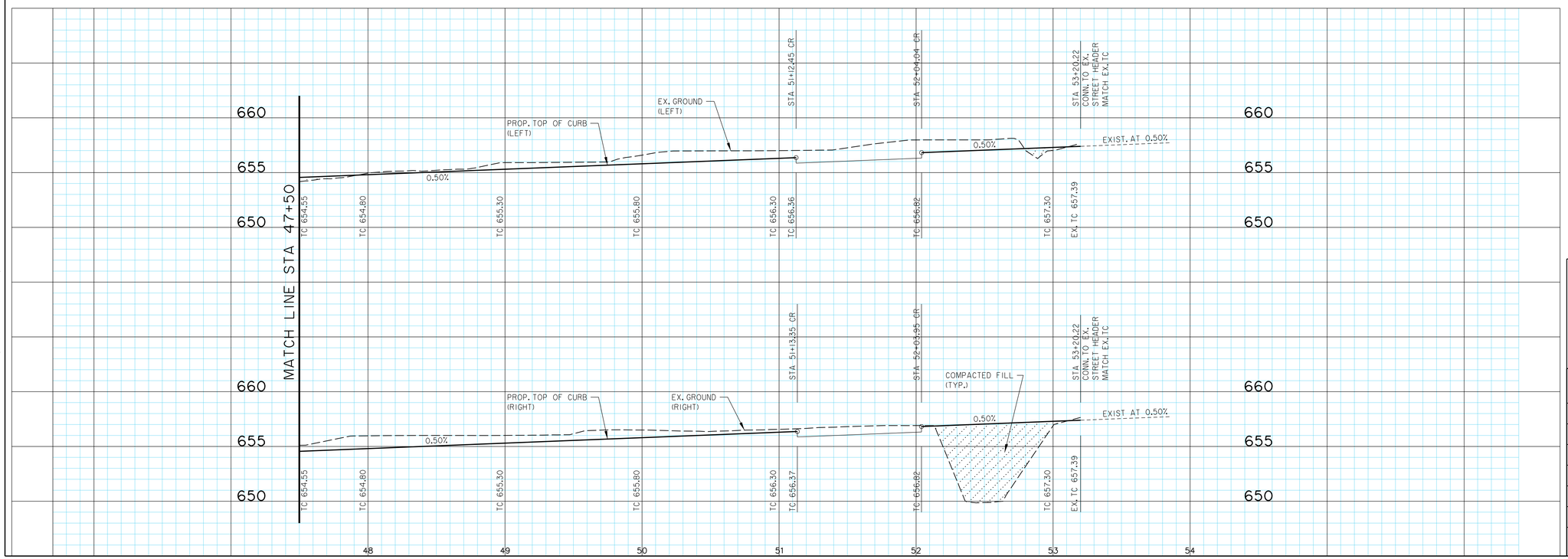

BENCHMARKS:

BM #5
Square cut on top concrete headwall, 5' west of edge of pavement of Frontier Parkway, 56 feet south of centerline of County Road No. 5, 485 feet east of centerline County Road No. 51.

N=7147548.47
E=2488493.86
Elev. = 652.94

BM #8
Square cut northeast corner of concrete headwall, north side of County Road 5, 1200 feet +- east of the intersection of County Road 5 and Frontier Parkway.
Elev. = 662.56

STATE OF TEXAS
ROBERT M. STENGELE
50145
REGISTERED PROFESSIONAL ENGINEER
3-25-16

Huitt-Zollars, Inc.
Firm Registration No. F-761

RECORD DRAWING

THESE RECORD DOCUMENTS HAVE BEEN PREPARED BASED ON INFORMATION PROVIDED BY OTHERS. THE DESIGN PROFESSIONAL IS UNDER NO OBLIGATION OR DUTY TO VERIFY THE ACCURACY AND/OR COMPLETENESS OF THIS INFORMATION AND HAS NOT DONE SO. THE DESIGN PROFESSIONAL SHALL NOT BE RESPONSIBLE FOR ANY ERRORS OR OMISSION THAT MAY BE INCORPORATED AS A RESULT OF ERRONEOUS INFORMATION PROVIDED BY OTHERS.

PAVING PLAN & PROFILE
STA. 47+50 TO THE END OF CONSTRUCTION

LIGHT FARMS

LFC Land Company LLC

Collin County Municipal Utility District No. 1

COLLIN COUNTY, TEXAS

HUITT-ZOLLARS

DESIGN	CHECKED	DATE	SCALE	NOTES	JOB NO.	SHT. NO.
HZI	HZI		H: 1"=40' V: 1"= 5'		01-3905-52	02-05

WORTHINGTON WAY (Cont.)

P-201508-01

I:/proj/01390501/01390552-CCW&WW EXT/dgn/ccw-ww-pv05.dgn

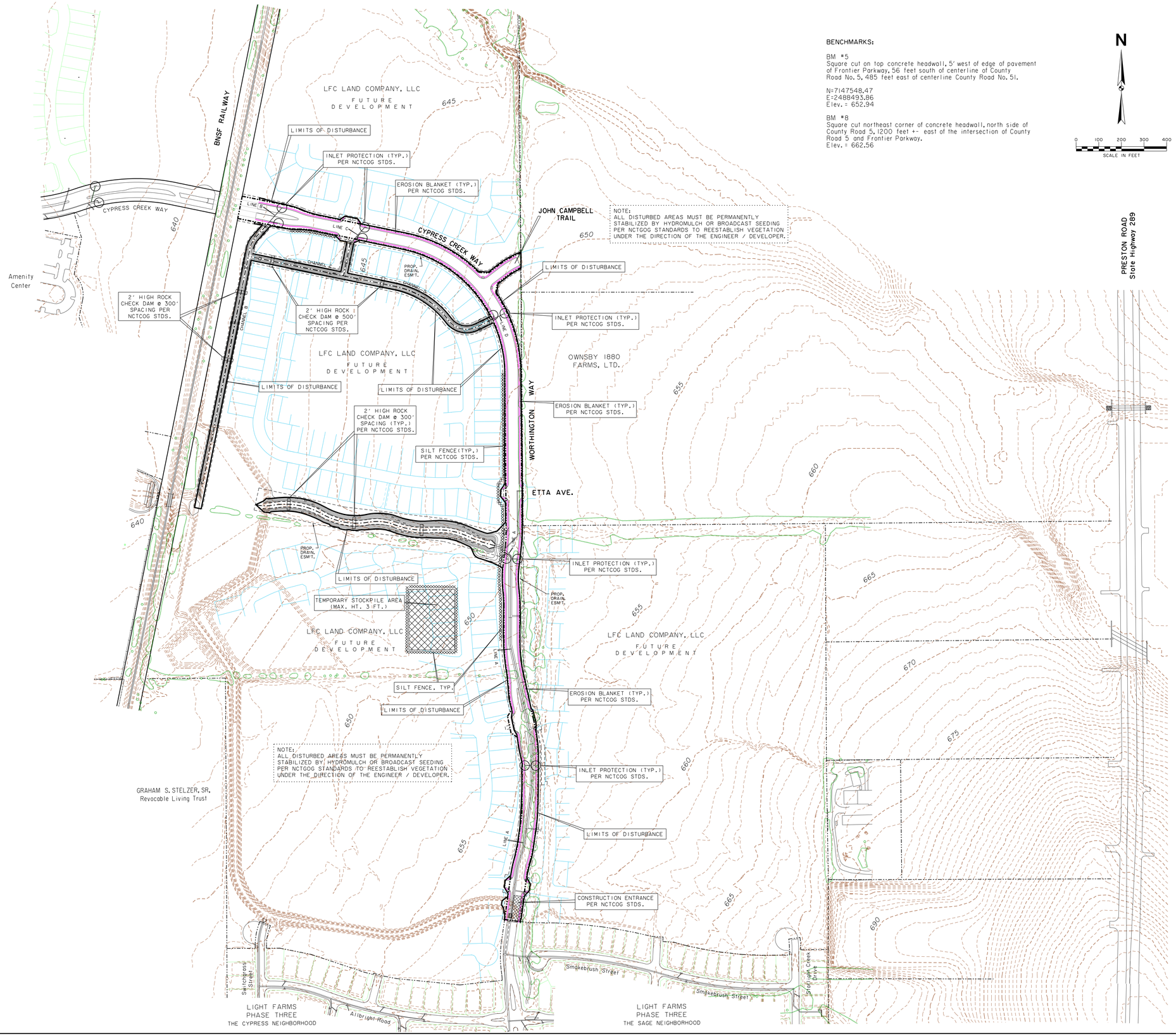

NOTE:
ALL DISTURBED AREAS MUST BE PERMANENTLY STABILIZED BY HYDROMULCH OR BROADCAST SEEDING PER NCTGOG STANDARDS TO REESTABLISH VEGETATION UNDER THE DIRECTION OF THE ENGINEER / DEVELOPER.

BENCHMARKS:

BM #5
Square cut on top concrete headwall, 5' west of edge of pavement of Frontier Parkway, 56 feet south of centerline of County Road No. 5, 485 feet east of centerline County Road No. 51.

N=7147548.47
E=2488493.86
Elev. = 652.94

BM #8
Square cut northeast corner of concrete headwall, north side of County Road 5, 1200 feet +- east of the intersection of County Road 5 and Frontier Parkway.
Elev. = 662.56

N

0 100 200 300 400
SCALE IN FEET

AREA OF DISTURBANCE 9.7 AC.

PHASES OF EROSION CONTROL:

A. GRADING:

1) INSTALL SILT FENCE
2) INSTALL CONST. ENTRANCE
3) INSTALL CHECK DAM

B. UTILITIES:

1) MAINTAIN SILT FENCE
2) MAINTAIN CONST. ENTRANCE
3) MAINTAIN CHECK DAMS
4) INSTALL INLET PROTECTION

C. PAVING:

1) MAINTAIN SILT FENCE
2) MAINTAIN CHECK DAMS
3) REMOVE CONST. ENTRANCE
4) MAINTAIN INLET PROTECTION
5) INSTALL EROSION CONTROL BLANKET ALONG BACK OF CURB & ON SLOPED AREAS

D. POST EROSION CONTRIOL

REMOVE ALL EROSION CONTROL DEVICES AFTER COMPLETION AND VEGETATION IS ESTABLISHED. NOTIFY OWNER PRIOR TO REMOVAL OF DEVICES.

NOTES:

CONTRACTOR REQUIRED TO REPAIR AND/OR REPLACE DAMAGED EROSION CONTROL DEVICES CAUSED BY HIS ACTIVITES.

REFER TO SHEET 03-02 FOR EROSION CONTROL DETAILS.

NOTE:
GRADING CONTRACTOR SHALL PREPARE THE STORM WATER POLLUTION PREVENTION PLAN (SWPPP) AND FILE AN NOTICE OF INTENT (NOI) WITH THE TEXAS COMMISSION ON ENVIRONMENTAL QUALITY (TCEQ) PRIOR TO CONSTRUCTION. A COPY OF THE NOI WILL BE PROVIDED TO THE CITY OF CELINA AND COLLIN COUNTY MUD NO. 1. REFER TO SWPPP FOR BMP MAINTENANCE SCHEDULE.

LEGEND

- INLET PROTECTION
- SILT FENCE
- EROSION BLANKET
- CONSTRUCTION ENTRANCE
- STORM SEWER
- ROCK CHECK DAM

STATE OF TEXAS
ROBERT M. STENGELE
50145
REGISTERED PROFESSIONAL ENGINEER
3-25-16

Huitt-Zollars, Inc.
Firm Registration No. F-761

RECORD DRAWING

THESE RECORD DOCUMENTS HAVE BEEN PREPARED BASED ON INFORMATION PROVIDED BY OTHERS. THE DESIGN PROFESSIONAL IS UNDER NO OBLIGATION OR DUTY TO VERIFY THE ACCURACY AND/OR COMPLETENESS OF THIS INFORMATION AND HAS NOT DONE SO. THE DESIGN PROFESSIONAL SHALL NOT BE RESPONSIBLE FOR ANY ERRORS OR OMISSION THAT MAY BE INCORPORATED AS A RESULT OF ERRONEOUS INFORMATION PROVIDED BY OTHERS.

EROSION CONTROL PLAN

LIGHT FARMS

LFC Land Company LLC

Collin County Municipal Utility District No. 1

COLLIN COUNTY, TEXAS

HUITT-ZOLLARS

DESIGN	CHECKED	DATE	SCALE	NOTES	JOB NO.	SHT. NO.
HZI	HZI		1"=200'		01-3905-52	03-01

I:/proj/01390501/01390552-CCW&WW EXT/dgn/ccw-ww-ec01.dgn

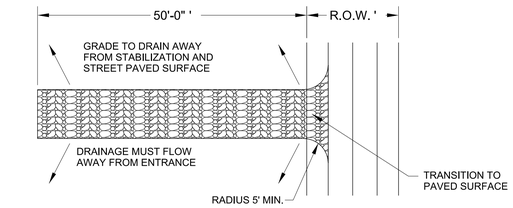

PLAN

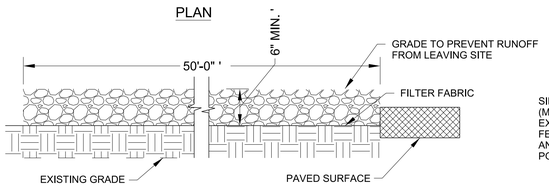

PROFILE

STABILIZED CONSTRUCTION ENTRANCE / EXIT

NCTCOG 02270.G
STORM WATER QUALITY
BEST MANAGEMENT PRACTICES
FOR CONSTRUCTION ACTIVITIES

DETAIL 'A'

N.T.S.

The Stabilized Construction Entrance / Exit Is To Be Used As A Vehicle Wash Down Area For Debris And Soil Removal Before Exiting The Site Onto The Existing Roadway. Location For Installation Should Be Identified On The Project's Erosion Control Plan. An Alternate Location Must Be Approved By Owner Or Engineer Prior To Installation. Stabilized Construction Entrance / Exit Shall Be Top Dressed With Additional Stone As Necessary.

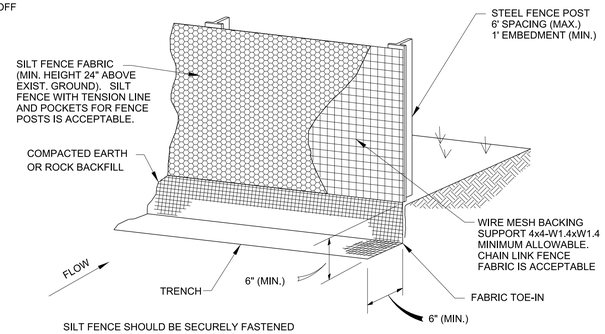

SILT FENCE SHOULD BE SECURELY FASTENED TO BACKING SUPPORT AND POSTS.

SILT FENCE

NCTCOG 02270.B
STORM WATER QUALITY
BEST MANAGEMENT PRACTICES
FOR CONSTRUCTION ACTIVITIES

DETAIL 'B'

N.T.S.

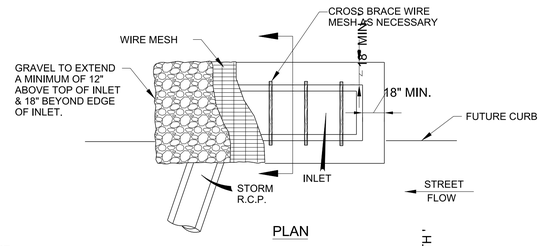

PLAN

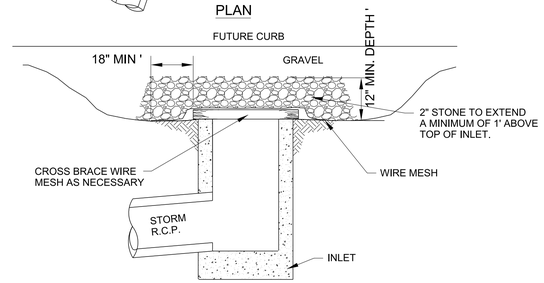

CROSS-SECTION

INLET PROTECTION WIRE MESH & GRAVEL

NCTCOG 02270.G
STORM WATER QUALITY
BEST MANAGEMENT PRACTICES
FOR CONSTRUCTION ACTIVITIES

DETAIL 'C'

N.T.S.

CONTRACTOR SHALL INTERCEPT FLOW AND INSTALL INLET PROTECTION MEASURES AS SOON AS PRACTICABLE.

SILT FENCE GENERAL NOTES:

1. STEEL POSTS WHICH SUPPORT THE SILT FENCE SHALL BE INSTALLED ON A SLIGHT ANGLE TOWARD THE ANTICIPATED RUNOFF SOURCE. POST MUST BE EMBEDDED A MINIMUM OF ONE FOOT.

2. THE TOE OF THE SILT FENCE SHALL BE TRENCHED IN WITH A SPADE OR MECHANICAL TRENCHER, SO THAT THE DOWNSLOPE FACE OF THE TRENCH IS FLAT AND PERPENDICULAR TO THE LINE OF FLOW. WHERE FENCE CANNOT BE TRENCHED IN (e.g. PAVEMENT), WEIGHT FABRIC FLAP WITH ROCK ON UPHILL SIDE TO PREVENT FLOW FROM SEEPING UNDER FENCE.

3. THE TRENCH MUST BE A MINIMUM OF 6 INCHES DEEP AND 6 INCHES WIDE TO ALLOW FOR THE SILT FENCE FABRIC TO BE LAID IN THE GROUND AND BACKFILLED WITH COMPACTED MATERIAL.

4.SILT FENCE SHOULD BE SECURELY FASTENED TO EACH STEEL SUPPORT POST OR TO WOVEN WIRE, WHICH IS IN TURN ATTACHED TO THE STEEL FENCE POST.

5. THERE SHALL BE A 3 FOOT OVERLAP, SECURELY FASTENED WHERE ENDS OF FABRIC MEET.

6. INSPECTION SHALL BE MADE WEEKLY AND AFTER EACH RAINFALL. REPAIR OR REPLACEMENT SHALL BE MADE PROMPTLY AS NEEDED.

7. SILT FENCE SHALL BE REMOVED WHEN THE SITE IS COMPLETELY STABILIZED SO AS NOT TO BLOCK OR IMPEDE STORM FLOW OR DRAINAGE.

8. ACCUMULATED SILT SHALL BE REMOVED WHEN IT REACHES A DEPTH OF HALF THE HEIGHT OF THE FENCE. THE SILT SHALL BE DISPOSED OF AT AN APPROVED SITE AND IN SUCH A MANNER AS TO NOT CONTRIBUTE TO TO ADDITIONAL SILTATION.

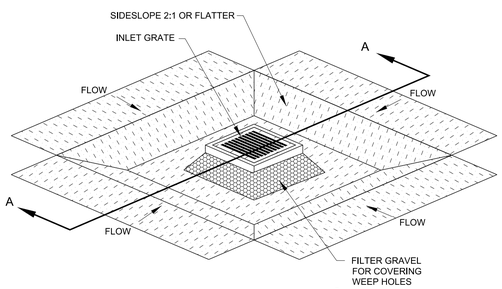

ISOMETRIC PLAN VIEW

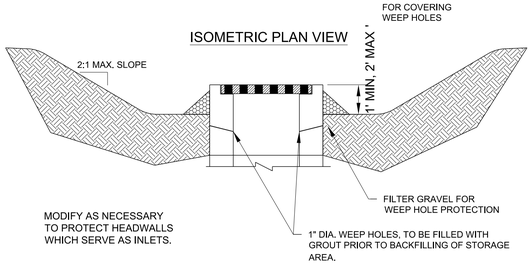

SECTION A-A

EXCAVATED IMPOUNDMENT INLET PROTECTION

DETAIL 'D'

N.T.S.

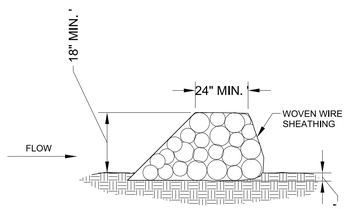

CROSS SECTION

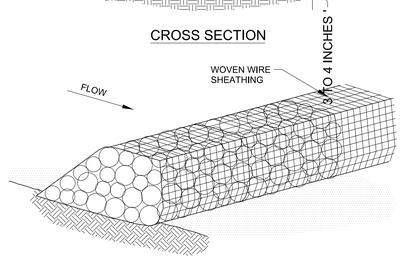

ISOMETRIC PLAN VIEW

ROCK BERM

DETAIL 'E'

N.T.S.

METHODOLOGY APPLIES TO RECESSED AND STANDARD CURB INLETS. CARE SHOULD BE TAKEN TO KEEP MEASURE OUT OF TRAFFIC.

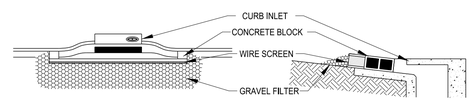

CURB INLET PROTECTION

DETAIL "F"

N.T.S.

STATE OF TEXAS
ROBERT M. STENGELE
50145
REGISTERED PROFESSIONAL ENGINEER
3-23-16

Huitt-Zollars, Inc.
Firm Registration No. F-761

RECORD DRAWING

THESE RECORD DOCUMENTS HAVE BEEN PREPARED BASED ON INFORMATION PROVIDED BY OTHERS. THE DESIGN PROFESSIONAL IS UNDER NO OBLIGATION OR DUTY TO VERIFY THE ACCURACY AND/OR COMPLETENESS OF THIS INFORMATION AND HAS NOT DONE SO. THE DESIGN PROFESSIONAL SHALL NOT BE RESPONSIBLE FOR ANY ERRORS OR OMISSION THAT MAY BE INCORPORATED AS A RESULT OF ERRONEOUS INFORMATION PROVIDED BY OTHERS.

EROSION CONTROL DETAILS

LIGHT FARMS

LFC Land Company LLC

Collin County Municipal Utility District No. 1

COLLIN COUNTY, TEXAS

HUITT-ZOLLARS

DESIGN	CHECKED	DATE	SCALE	NOTES	JOB NO.	SHT. NO.
HZI	HZI		NA		01-3905-52	03-02

I:/proj/01390501/01390552-CCW&WW EXT/dgn/ccw-ww-ecdet.dgn

NOTE:
REFER TO SHEET 04-02 FOR
DESIGN FLOW CALCULATIONS

LEGEND

EXISTING CONTOUR	500
DRAINAGE DIVIDE LINE	
SURFACE FLOW DIRECTION	
DRAINAGE AREA	AREA NO — XX; ACRES; Q 100 cfs

N

0 100 200 300 400
SCALE IN FEET

OFFITE DRAINAGE AREA MAP
NTS

DESIGN FLOW (Q_R) BY RATIONAL METHOD					
LOCATION, AREA DESIGNATION	INTENSITY "I_{100}" (in/hr)	DRAINAGE AREA "A" (AC)	RUNOFF COEFFICIENT "C"	FREQUENCY (YRS.)	DESIGN FLOW "Q_{100}"= C*I*A (CFS)
1	3	4	5	6	7
A1	7.52	1.79	0.60	100	8.08
A2	7.52	1.72	0.60	100	7.76
A3	7.52	25.03	0.60	100	112.94
A4	7.52	18.72	0.60	100	84.46
A5	7.52	1.85	0.60	100	8.35
A6	7.52	0.65	0.60	100	2.93
A7	7.52	6.33	0.60	100	28.56
A8	7.52	6.87	0.60	100	31.00
A9	7.52	0.51	0.60	100	2.30
A10	7.52	75.40	0.60	100	322.60
A11	7.52	0.65	0.60	100	2.93
B1	7.52	0.83	0.60	100	3.74
B2	7.52	0.69	0.60	100	3.11
C1	7.52	1.10	0.60	100	4.96
C2	7.52	1.90	0.60	100	8.57
D1	7.52	0.80	0.60	100	3.61
D2	7.52	0.97	0.60	100	4.38
OS1	7.52	10.40	0.40	100	31.28
OS2	7.52	6.96	0.60	100	31.40
OS3	7.52	24.65	0.40	100	74.15

BENCHMARKS:

BM #5
Square cut on top concrete headwall, 5' west of edge of pavement of Frontier Parkway, 56 feet south of centerline of County Road No. 5, 485 feet east of centerline County Road No. 51.

N=7147548.47
E=2488493.86
Elev. = 652.94

BM #8
Square cut northeast corner of concrete headwall, north side of County Road 5, 1200 feet +- east of the intersection of County Road 5 and Frontier Parkway.
Elev. = 662.56

STATE OF TEXAS
ROBERT M. STENGELE
50145
REGISTERED PROFESSIONAL ENGINEER
3-25-16

Huitt-Zollars, Inc.
Firm Registration No. F-761

RECORD DRAWING

THESE RECORD DOCUMENTS HAVE BEEN PREPARED BASED ON INFORMATION PROVIDED BY OTHERS. THE DESIGN PROFESSIONAL IS UNDER NO OBLIGATION OR DUTY TO VERIFY THE ACCURACY AND/OR COMPLETENESS OF THIS INFORMATION AND HAS NOT DONE SO. THE DESIGN PROFESSIONAL SHALL NOT BE RESPONSIBLE FOR ANY ERRORS OR OMISSION THAT MAY BE INCORPORATED AS A RESULT OF ERRONEOUS INFORMATION PROVIDED BY OTHERS.

DRAINAGE AREA MAP

LIGHT FARMS

LFC Land Company LLC

Collin County Municipal Utility District No. 1

COLLIN COUNTY, TEXAS

HUITT-ZOLLARS

DESIGN	CHECKED	DATE	SCALE	NOTES	JOB NO.	SHT. NO.
HZI	HZI		1"=200'		01-3905-52	04-01

I:/proj/0139050I/0139052-CCW&WW EXT/dgn/ccw-ww-dam01.dgn

STORM SEWER CALCULATIONS

Line or Lateral Name	RUNOFF COLLECTION POINT (Inlet or Manhole)		Distance Between Collection Points (ft)	INCREMENTAL DRAINAGE AREA				Accum-ulated "CA"	Time at Upstream Station (minutes)	Design Storm Frequency (yrs)	Intensity "I" (inches/hr)	Storm Water Runoff "Q" (c.f.s.)	Slope of Hydraulic Gradient "S" (ft/ft)	Selected Storm Sewer Size	Storm Sewer Height	Number of Barrels	Slope of Storm Pipe (ft/ft)	Pipe Capacity (c.f.s.)	Velocity in Sewer Between Collection Points "V" (f.p.s.)	Friction Head Loss Coeff. per City of Celina Storm Manual	Velocity Head Loss of Upstream Station (feet)	Flow Time in Sewer Distance/V*60 (minutes)	Time of Downstream Station (minutes)	Remarks
	Upstream Station	Downstream Station		Area No.	Drainage Area "A" (Acres)	Runoff Coeff. "C"	Incremental "CA"																	
	1	2	3	4	5	6	7	8	9	10	11	12	13	14	14A	14B			15	16	17	18	19	20
LINE A																								
LAT. A10	32+80.00	31+60.00	120	A10	75.40	0.6	42.90	42.90	15.00	100	7.52	322.60	0.0043	5	4	2	0.0056	347.60	10.40	na	na	0.19	15.19	PARTIAL FLOW
LAT. A8 & A9	31+60.00	28+77.00	283	A8 &A9	7.38	0.6	4.43	47.33	15.00	100	7.52	355.90	0.0052	6	4	2	0.0050	367.88	11.10	na	na	0.42	15.42	PARTIAL FLOW
LAT. A7	28+77.00	26+00.00	277	A7	6.33	0.6	3.80	51.12	15.00	100	7.52	384.46	0.0039	6	4	2	0.0050	384.46	8.24	1.08	1.05	0.56	15.56	
LAT. A5 & A6	26+00.00	24+34.00	166	A5 & A6	2.50	0.6	1.50	52.62	15.00	100	7.52	395.74	0.0041	6	4	2	0.0050	395.74	8.49	0.68	1.12	0.33	15.33	
LAT. A4	24+34.00	19+28.00	506	A4	43.37	0.6	21.69	73.72	15.00	100	7.52	554.35	0.0043	6	5	2	0.0050	554.35	9.45	2.18	1.36	0.89	15.89	
LAT. A3	19+28.00	16+76.00	252	A3, OS1 & OS2	41.57	0.6	22.86	96.58	15.00	100	7.52	726.27	0.0049	7	5	2	0.0050	726.27	10.65	1.23	1.76	0.39	15.39	
LAT. A1 & A2	16+76.00	15+80.00	96	A1 & A2	3.51	0.6	2.11	98.68	15.00	100	7.52	742.11	0.0052	7	5	2	0.0050	742.11	10.80	0.50	1.81	0.15	15.15	
LINE B																								
LAT. B2	15+02.00	14+22.00	80	B2	0.69	0.6	0.41	0.41	15.00	100	7.52	3.11	0.0004	21	0		0.0050	11.20	3.32	na	na	0.40	15.40	PARTIAL FLOW
LAT. B1	14+22.00	13+95.00	27	B1	0.83	0.6	0.50	0.91	15.00	100	7.52	6.86	0.0019	21	0		0.0050	11.20	4.00	na	na	0.11	15.11	PARTIAL FLOW
LINE C																								
LAT. C2	7+48.00	6+94.00	54	C2	1.90	0.6	1.14	1.14	15.00	100	7.52	8.57	0.0029	21	0		0.0050	11.20	4.11	na	na	0.22	15.22	PARTIAL FLOW
LAT. C1	6+94.00	6+57.00	37	C1	1.10	0.6	0.66	1.80	15.00	100	7.52	13.54	0.0036	24	0		0.0050	16.00	5.18	na	na	0.12	15.12	PARTIAL FLOW
LINE C																								
LAT. D2	8+31.00	7+77.00	54	D2	0.97	0.6	0.58	0.58	15.00	100	7.52	4.38	0.0017	18	0		0.0050	7.43	4.70	na	na	0.19	15.19	PARTIAL FLOW
LAT. D1	7+77.00	7+60.00	17	D1	0.80	0.6	0.48	1.06	15.00	100	7.52	7.99	0.0058	18	0		0.0050	7.43	5.25	na	na	0.05	15.05	PARTIAL FLOW

INLET CALCULATIONS

INLET			DESIGN STORM FREQUENCY (yr)	AREA RUNOFF Q=CIA					CARRY-OVER FROM UPSTREAM INLET (cfs)	TOTAL GUTTER FLOW (cfs)	GUTTER CAPACITY (cfs)	GUTTER SLOPE (ft/100 ft)	CROWN TYPE	SELECTED INLET		CARRY-OVER TO DOWNSTREAM INLET (cfs)
NO.	LOCATION (PAVING STATION)			TIME OF CONC. (min)	INTENSITY I (in/hr)	RUNOFF COEFF. "C"	AREA (ac)	"Q" (cfs)						LENGTH "Li" (feet)	TYPE	
1	2		3	4	5	6	7	8	9.0	10	11	12	13	14	15	16
1	15+05	CYPRESS CREEK WAY	100	15	7.52	0.60	0.69	3.1		3.1	7.4	0.005	STRAIGHT CROWN	10	SAG	0.0
2	15+05	CYPRESS CREEK WAY	100	15	7.52	0.60	0.83	3.7		3.7	7.4	0.005	STRAIGHT CROWN	10	SAG	0.0
3	18+80	CYPRESS CREEK WAY	100	15	7.52	0.60	1.90	8.6		8.6	7.4	0.005	STRAIGHT CROWN	10	SAG	0.0
4	18+80	CYPRESS CREEK WAY	100	15	7.52	0.60	1.10	5.0		5.0	7.4	0.005	STRAIGHT CROWN	10	SAG	0.0
5	26+20	WORTHINGTON WAY	100	15	7.52	0.60	0.97	4.4		4.4	7.9	0.0056	STRAIGHT CROWN	10	ON GRADE	0.0
6	26+03	WORTHINGTON WAY	100	15	7.52	0.60	0.80	3.6		3.6	7.9	0.0056	STRAIGHT CROWN	10	ON GRADE	0.0
7	37+00	WORTHINGTON WAY	100	15	7.52	0.60	1.79	8.1	0.7	8.8	7.4	0.005	STRAIGHT CROWN	10	SAG	0.0
8	37+03	WORTHINGTON WAY	100	15	7.52	0.60	1.72	7.8		7.8	7.4	0.005	STRAIGHT CROWN	10	SAG	0.0
9	46+23	WORTHINGTON WAY	100	15	7.52	0.60	1.85	8.3		8.3	7.4	0.005	STRAIGHT CROWN	10	ON GRADE	0.7
10	46+23	WORTHINGTON WAY	100	15	7.52	0.60	0.65	2.9		2.9	7.43	0.005	STRAIGHT CROWN	10	ON GRADE	0.0

STATE OF TEXAS
ROBERT M. STENGELE
50145
REGISTERED
PROFESSIONAL ENGINEER
Robert M. Stengele
3-25-16

Huitt-Zollars, Inc.
Firm Registration No. F-761

RECORD DRAWING

THESE RECORD DOCUMENTS HAVE BEEN PREPARED BASED ON INFORMATION PROVIDED BY OTHERS. THE DESIGN PROFESSIONAL IS UNDER NO OBLIGATION OR DUTY TO VERIFY THE ACCURACY AND/OR COMPLETENESS OF THIS INFORMATION AND HAS NOT DONE SO. THE DESIGN PROFESSIONAL SHALL NOT BE RESPONSIBLE FOR ANY ERRORS OR OMISSION THAT MAY BE INCORPORATED AS A RESULT OF ERRONEOUS INFORMATION PROVIDED BY OTHERS.

DRAINAGE CALCULATIONS

LIGHT FARMS

LFC Land Company LLC

Collin County Municipal Utility District No. 1

COLLIN COUNTY, TEXAS

HUITT-ZOLLARS

DESIGN	CHECKED	DATE	SCALE	NOTES	JOB NO.	SHT. NO.
HZI	HZI		NA		01-3905-52	04-02

I:/proj/013905001/01390552-CCW&WW EXT/dgn/ccw-ww-drcalcl.dgn

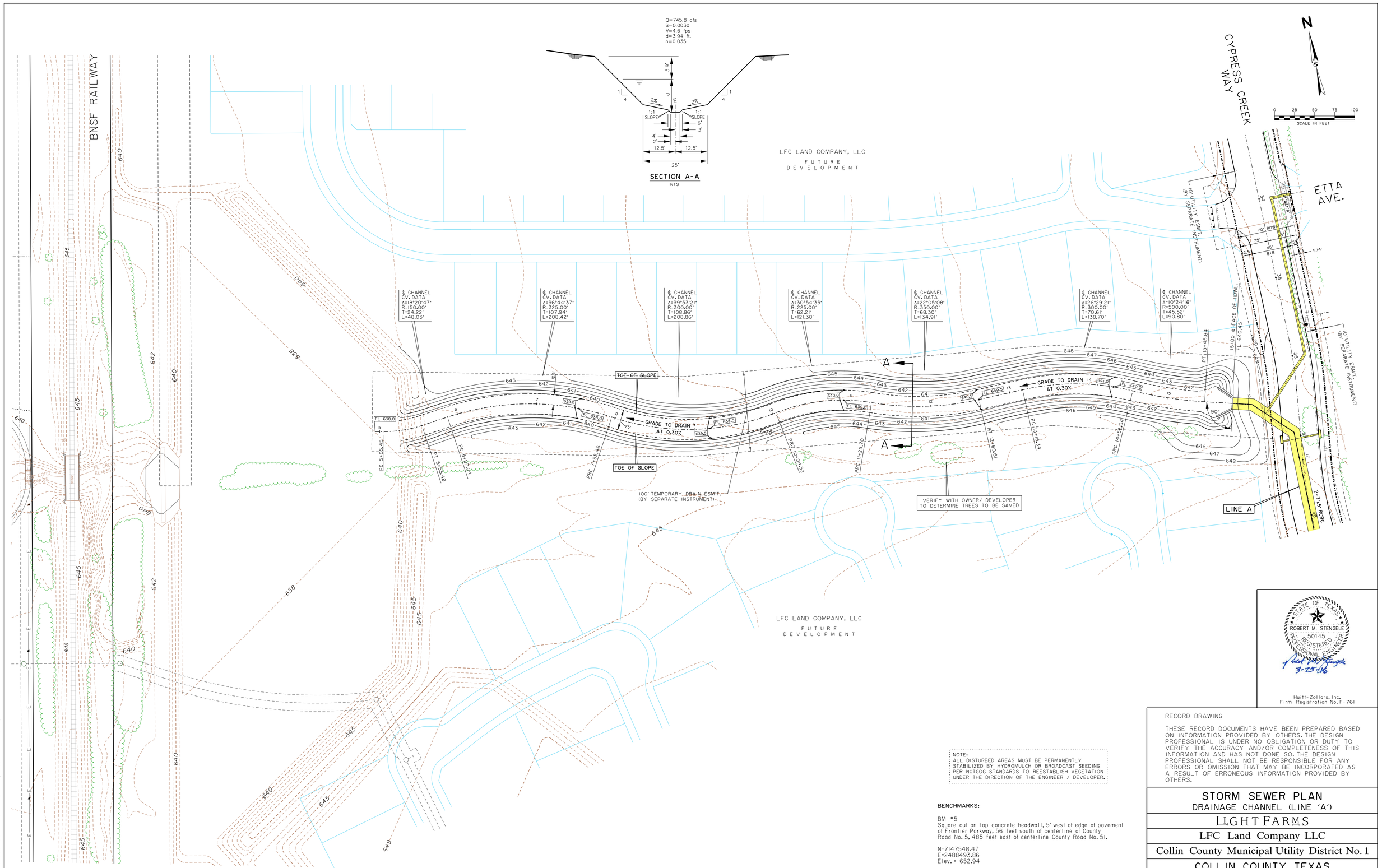

NOTE:
ALL DISTURBED AREAS MUST BE PERMANENTLY STABILIZED BY HYDROMULCH OR BROADCAST SEEDING PER NCTGOG STANDARDS TO REESTABLISH VEGETATION UNDER THE DIRECTION OF THE ENGINEER / DEVELOPER.

BENCHMARKS:

BM #5
Square cut on top concrete headwall, 5' west of edge of pavement of Frontier Parkway, 56 feet south of centerline of County Road No. 5, 485 feet east of centerline County Road No. 51.

N=7147548.47
E=2488493.86
Elev. = 652.94

BM #8
Square cut northeast corner of concrete headwall, north side of County Road 5, 1200 feet +- east of the intersection of County Road 5 and Frontier Parkway.
Elev. = 662.56

STATE OF TEXAS
ROBERT M. STENGELE
No. 50145
REGISTERED PROFESSIONAL ENGINEER
3-25-16

Huitt-Zollars, Inc.
Firm Registration No. F-761

RECORD DRAWING

THESE RECORD DOCUMENTS HAVE BEEN PREPARED BASED ON INFORMATION PROVIDED BY OTHERS. THE DESIGN PROFESSIONAL IS UNDER NO OBLIGATION OR DUTY TO VERIFY THE ACCURACY AND/OR COMPLETENESS OF THIS INFORMATION AND HAS NOT DONE SO. THE DESIGN PROFESSIONAL SHALL NOT BE RESPONSIBLE FOR ANY ERRORS OR OMISSION THAT MAY BE INCORPORATED AS A RESULT OF ERRONEOUS INFORMATION PROVIDED BY OTHERS.

STORM SEWER PLAN
DRAINAGE CHANNEL (LINE 'A')

LIGHT FARMS

LFC Land Company LLC

Collin County Municipal Utility District No. 1

COLLIN COUNTY, TEXAS

HUITT-ZOLLARS

DESIGN	CHECKED	DATE	SCALE	NOTES	JOB NO.	SHT. NO.
HZI	HZI		1"= 50'		01-3905-52	05-01

I:/proj/0139050I/0139052-CCW&WW EXT/dgn/ccw-ww-s101.dgn

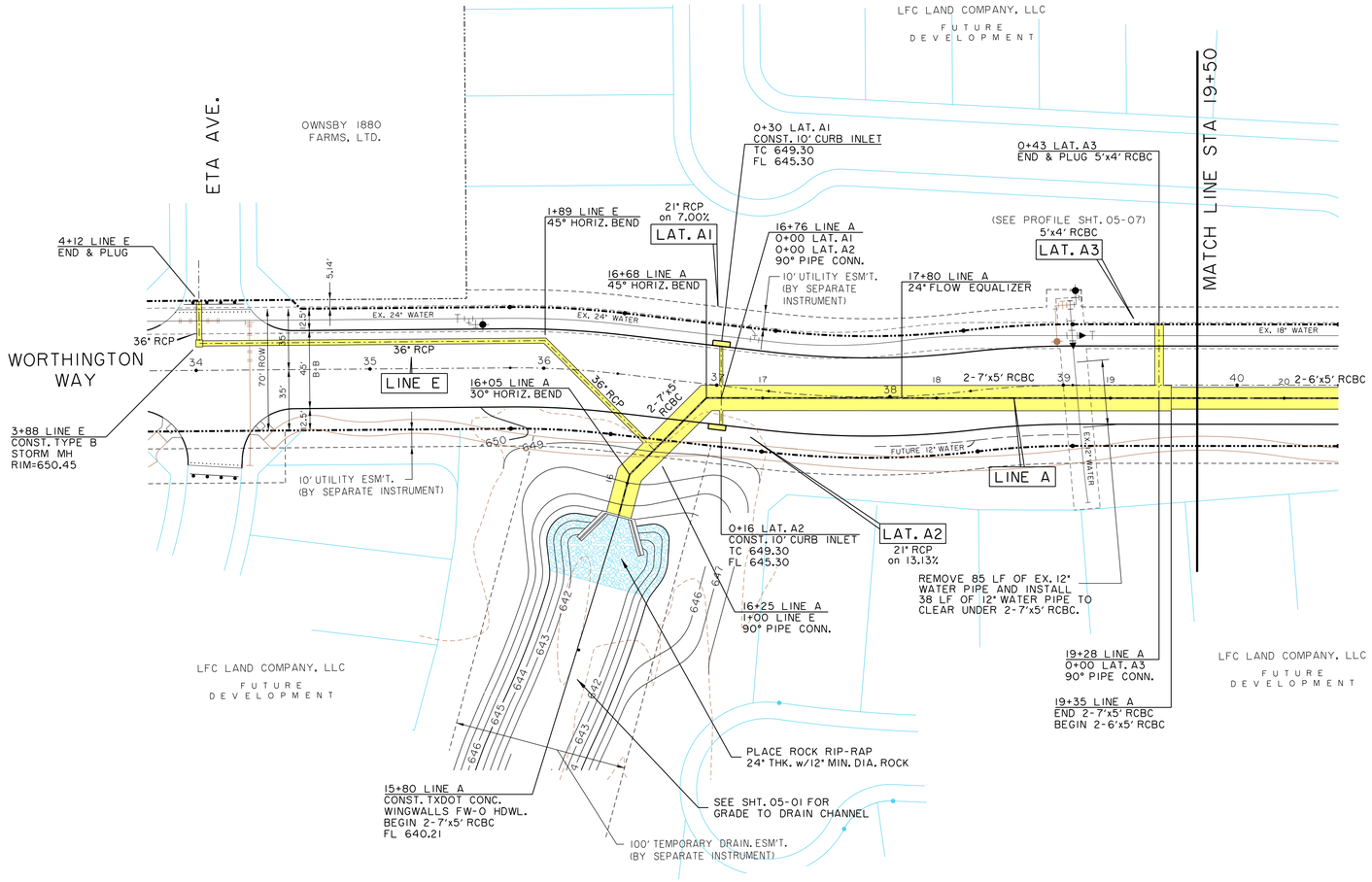

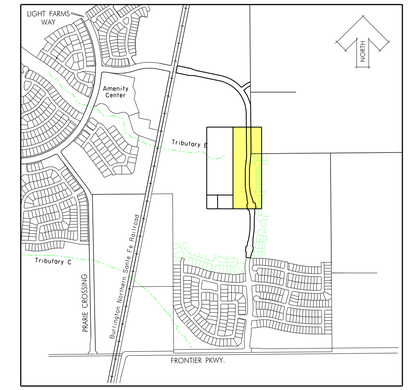

KEY MAP
NTS

N

0 20 40 60 80
SCALE IN FEET

LEGEND

	PROPOSED STORM SEWER (RCP)
	EXISTING STORM SEWER (RCP)
	PROPOSED STORM INLET
	EXISTING STORM INLET
	PROPOSED STORM MANHOLE
	EXISTING STORM MANHOLE
	SURFACE FLOW DIRECTION

BENCHMARKS:

BM #5
Square cut on top concrete headwall, 5' west of edge of pavement of Frontier Parkway, 56 feet south of centerline of County Road No. 5, 485 feet east of centerline County Road No. 51.

N=7147548.47
E=2488493.86
Elev. = 652.94

BM #8
Square cut northeast corner of concrete headwall, north side of County Road 5, 1200 feet +- east of the intersection of County Road 5 and Frontier Parkway.
Elev. = 662.56

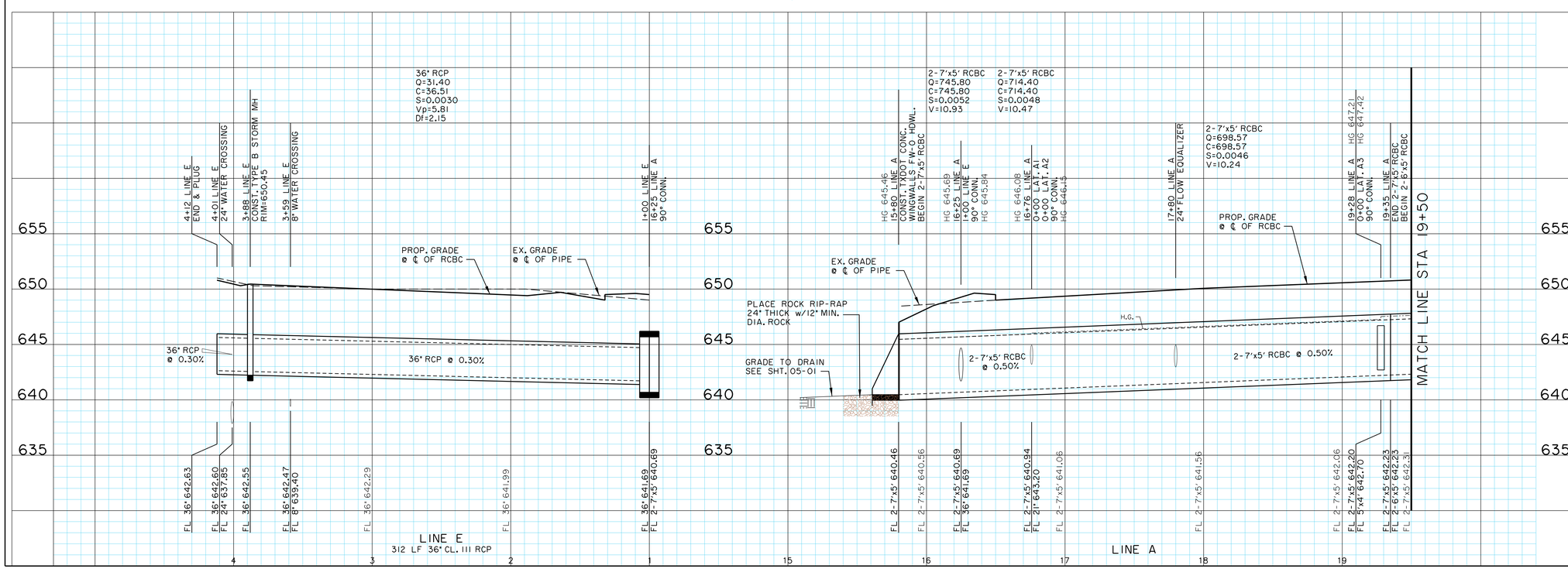

STATE OF TEXAS
ROBERT M. STENGELE
50145
REGISTERED PROFESSIONAL ENGINEER
9-25-06

Huitt-Zollars, Inc.
Firm Registration No. F-761

RECORD DRAWING

THESE RECORD DOCUMENTS HAVE BEEN PREPARED BASED ON INFORMATION PROVIDED BY OTHERS. THE DESIGN PROFESSIONAL IS UNDER NO OBLIGATION OR DUTY TO VERIFY THE ACCURACY AND/OR COMPLETENESS OF THIS INFORMATION AND HAS NOT DONE SO. THE DESIGN PROFESSIONAL SHALL NOT BE RESPONSIBLE FOR ANY ERRORS OR OMISSION THAT MAY BE INCORPORATED AS A RESULT OF ERRONEOUS INFORMATION PROVIDED BY OTHERS.

STORM SEWER PLAN & PROFILE
LINE A & E

LIGHT FARMS

LFC Land Company LLC

Collin County Municipal Utility District No. 1

COLLIN COUNTY, TEXAS

HUITT-ZOLLARS

DESIGN	CHECKED	DATE	SCALE	NOTES	JOB NO.	SHT. NO.
HZI	HZI		H: 1"=40' V: 1"= 5'		01-3905-52	05-02

I:/proj/013905001/01390552-CCW&WW EXT/dgn/ccw-ww-st02.dgn

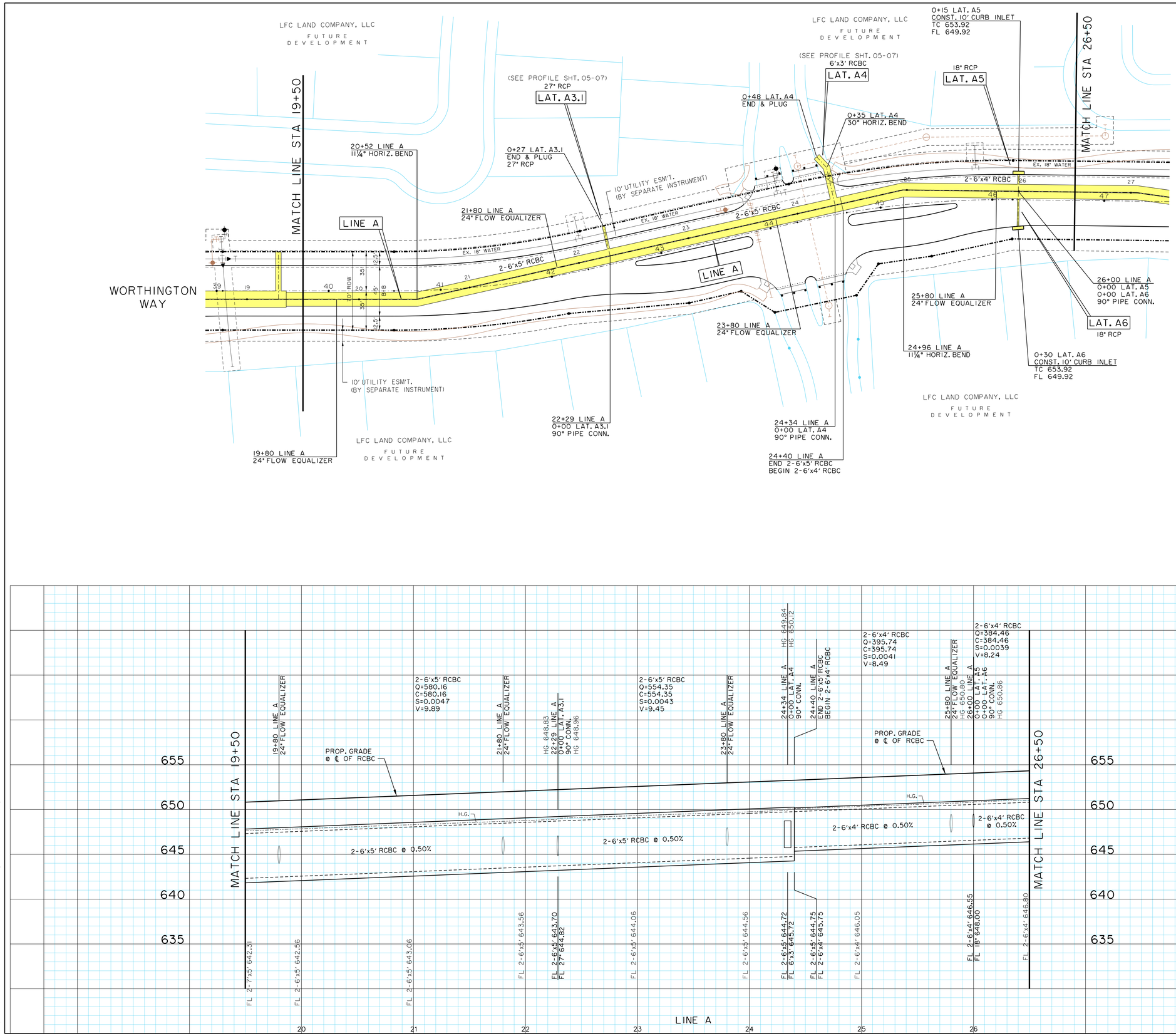

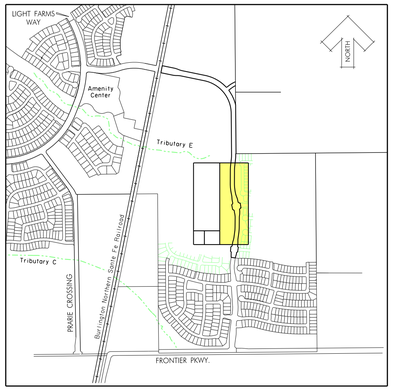

KEY MAP
NTS

N

0 20 40 60 80
SCALE IN FEET

LEGEND

	PROPOSED STORM SEWER (RCP)
	EXISTING STORM SEWER (RCP)
	PROPOSED STORM INLET
	EXISTING STORM INLET
	PROPOSED STORM MANHOLE
	EXISTING STORM MANHOLE
	SURFACE FLOW DIRECTION

BENCHMARKS:

BM #5
Square cut on top concrete headwall, 5' west of edge of pavement of Frontier Parkway, 56 feet south of centerline of County Road No. 5, 485 feet east of centerline County Road No. 51.

N=7147548.47
E=2488493.86
Elev. = 652.94

BM #8
Square cut northeast corner of concrete headwall, north side of County Road 5, 1200 feet +- east of the intersection of County Road 5 and Frontier Parkway.
Elev. = 662.56

STATE OF TEXAS
ROBERT M. STENGELE
50145
REGISTERED PROFESSIONAL ENGINEER
3-25-16

Huitt-Zollars, Inc.
Firm Registration No. F-761

RECORD DRAWING

THESE RECORD DOCUMENTS HAVE BEEN PREPARED BASED ON INFORMATION PROVIDED BY OTHERS. THE DESIGN PROFESSIONAL IS UNDER NO OBLIGATION OR DUTY TO VERIFY THE ACCURACY AND/OR COMPLETENESS OF THIS INFORMATION AND HAS NOT DONE SO. THE DESIGN PROFESSIONAL SHALL NOT BE RESPONSIBLE FOR ANY ERRORS OR OMISSION THAT MAY BE INCORPORATED AS A RESULT OF ERRONEOUS INFORMATION PROVIDED BY OTHERS.

STORM SEWER PLAN & PROFILE
LINE A (Cont.)

LIGHT FARMS

LFC Land Company LLC

Collin County Municipal Utility District No. 1

COLLIN COUNTY, TEXAS

HUITT-ZOLLARS

DESIGN	CHECKED	DATE	SCALE	NOTES	JOB NO.	SHT. NO.
HZI	HZI		H: 1"=40' V: 1"= 5'		01-3905-52	05-03

I:/proj/01390501/01390552-CCW&WW EXT/dgn/ccw-ww-s103.dgn

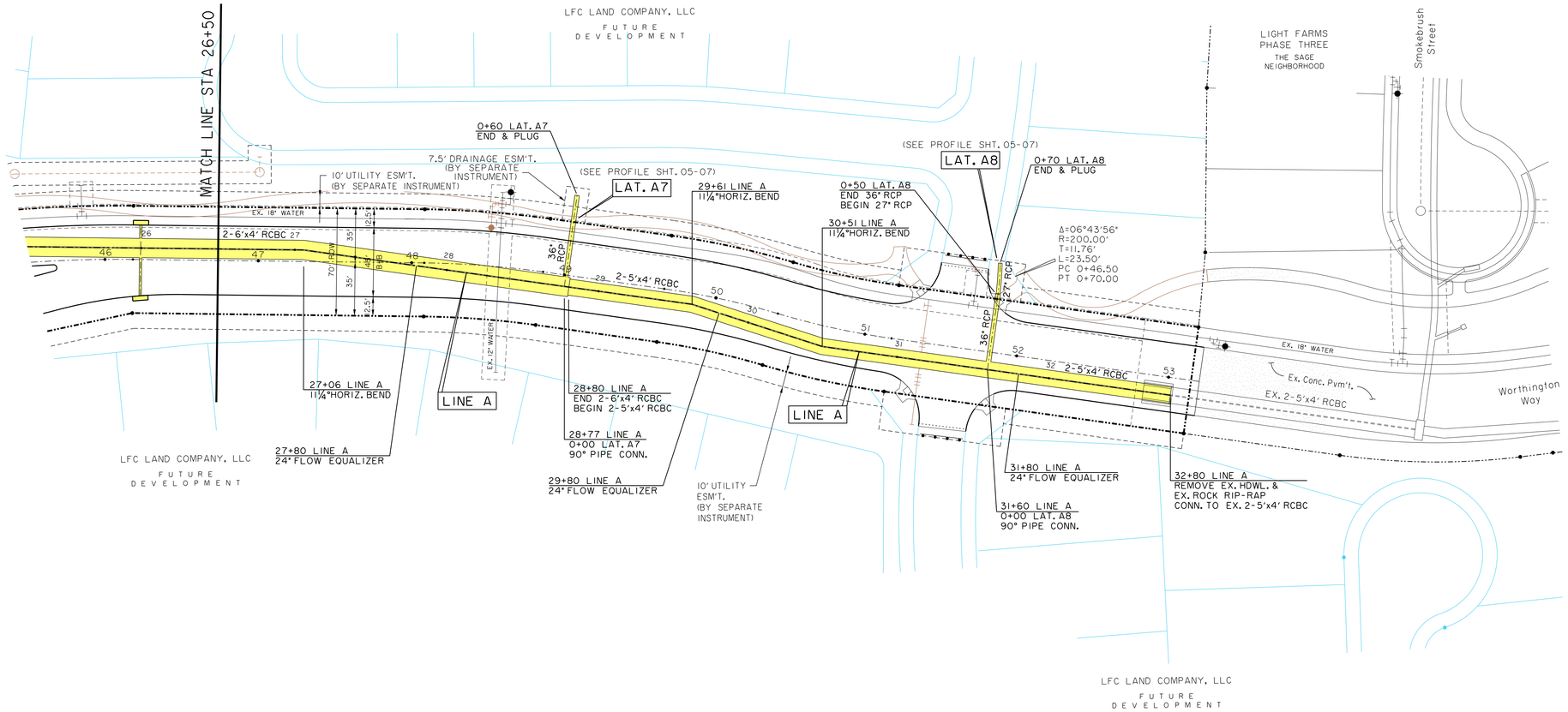

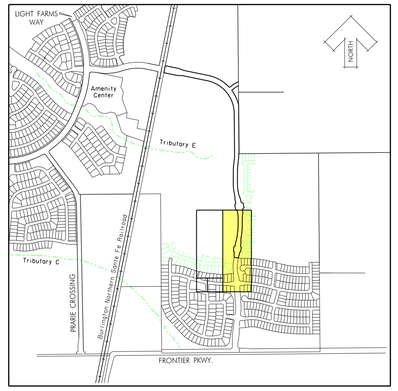

KEY MAP
NTS

N

0 20 40 60 80
SCALE IN FEET

LEGEND

	PROPOSED STORM SEWER (RCP)
	EXISTING STORM SEWER (RCP)
	PROPOSED STORM INLET
	EXISTING STORM INLET
	PROPOSED STORM MANHOLE
	EXISTING STORM MANHOLE
	SURFACE FLOW DIRECTION

BENCHMARKS:

BM #5
Square cut on top concrete headwall, 5' west of edge of pavement of Frontier Parkway, 56 feet south of centerline of County Road No. 5, 485 feet east of centerline County Road No. 51.

N=7147548.47
E=2488493.86
Elev. = 652.94

BM #8
Square cut northeast corner of concrete headwall, north side of County Road 5, 1200 feet +- east of the intersection of County Road 5 and Frontier Parkway.
Elev. = 662.56

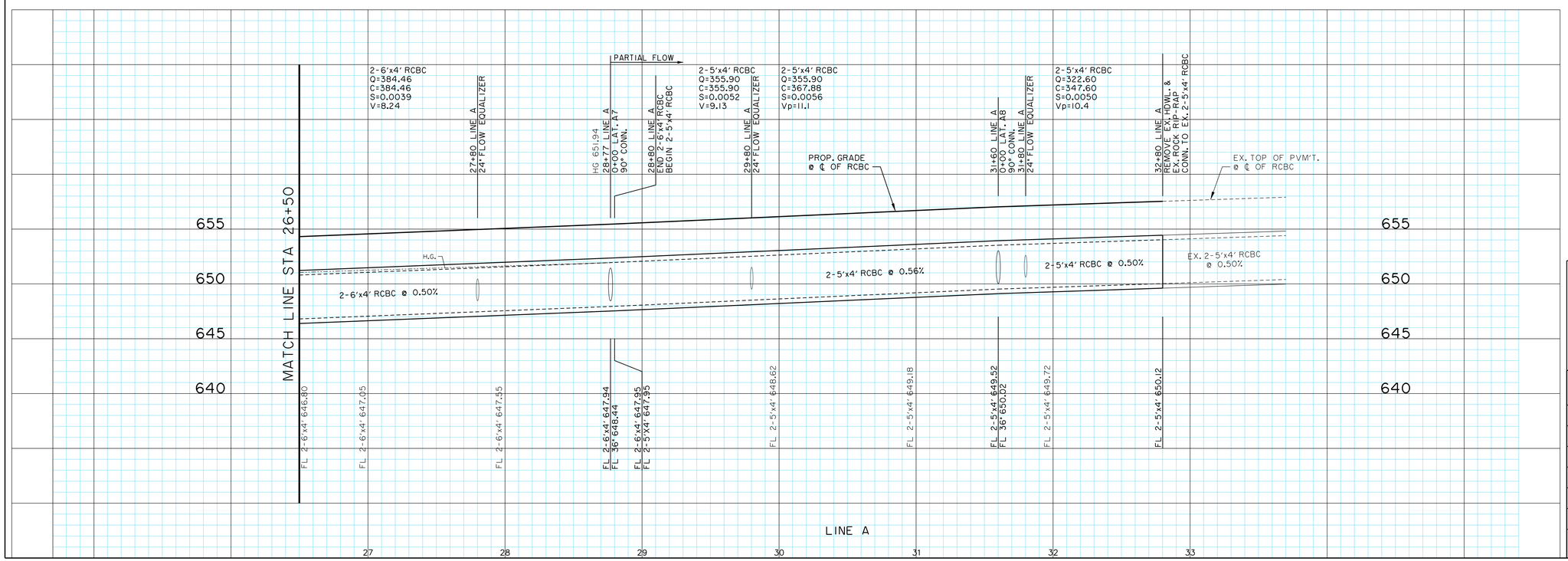

STATE OF TEXAS
ROBERT M. STENGELE
50145
REGISTERED PROFESSIONAL ENGINEER
3-25-16

Huitt-Zollars, Inc.
Firm Registration No. F-761

RECORD DRAWING

THESE RECORD DOCUMENTS HAVE BEEN PREPARED BASED ON INFORMATION PROVIDED BY OTHERS. THE DESIGN PROFESSIONAL IS UNDER NO OBLIGATION OR DUTY TO VERIFY THE ACCURACY AND/OR COMPLETENESS OF THIS INFORMATION AND HAS NOT DONE SO. THE DESIGN PROFESSIONAL SHALL NOT BE RESPONSIBLE FOR ANY ERRORS OR OMISSION THAT MAY BE INCORPORATED AS A RESULT OF ERRONEOUS INFORMATION PROVIDED BY OTHERS.

STORM SEWER PLAN & PROFILE
LINE A (Cont.)

LIGHT FARMS

LFC Land Company LLC

Collin County Municipal Utility District No. 1

COLLIN COUNTY, TEXAS

HUITT-ZOLLARS

DESIGN	CHECKED	DATE	SCALE	NOTES	JOB NO.	SHT. NO.
HZI	HZI		H: 1"=40' V: 1"= 5'		01-3905-52	05-04

I:/proj/01390501/01390552-CCW&WW EXT/dgn/ccw-ww-st04.dgn

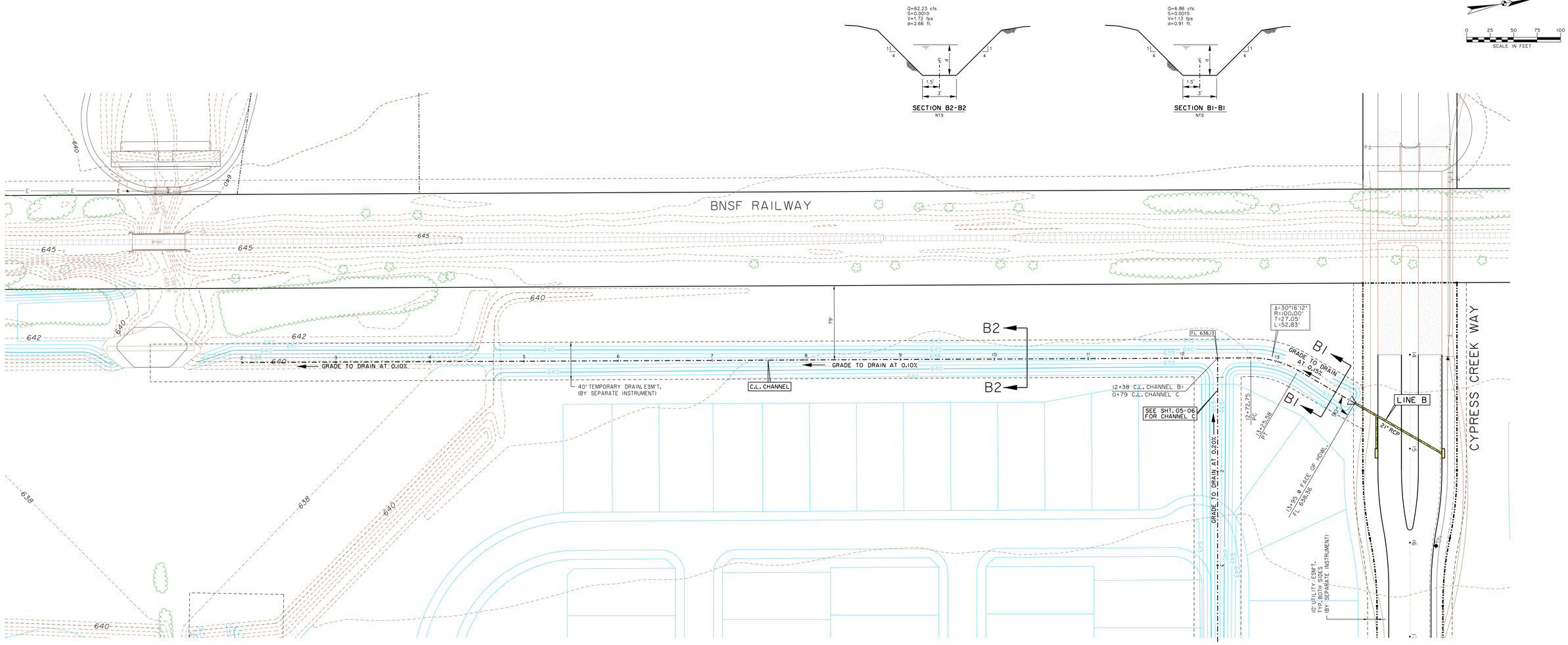

STATE OF TEXAS
ROBERT M. STENGELE
50145
REGISTERED
PROFESSIONAL ENGINEER
3-23-16

Huitt-Zollars, Inc.
Firm Registration No. F-761

RECORD DRAWING

THESE RECORD DOCUMENTS HAVE BEEN PREPARED BASED ON INFORMATION PROVIDED BY OTHERS. THE DESIGN PROFESSIONAL IS UNDER NO OBLIGATION OR DUTY TO VERIFY THE ACCURACY AND/OR COMPLETENESS OF THIS INFORMATION AND HAS NOT DONE SO. THE DESIGN PROFESSIONAL SHALL NOT BE RESPONSIBLE FOR ANY ERRORS OR OMISSION THAT MAY BE INCORPORATED AS A RESULT OF ERRONEOUS INFORMATION PROVIDED BY OTHERS.

BENCHMARKS:

BM #5
Square cut on top concrete headwall, 5' west of edge of pavement of Frontier Parkway, 56 feet south of centerline of County Road No. 5, 485 feet east of centerline County Road No. 51.

N=7147548.47
E=2488493.86
Elev. = 652.94

BM #8
Square cut northeast corner of concrete headwall, north side of County Road 5, 1200 feet +- east of the intersection of County Road 5 and Frontier Parkway.
Elev. = 662.56

STORM SEWER PLAN
DRAINAGE CHANNEL (LINE 'B')

LIGHT FARMS

LFC Land Company LLC

Collin County Municipal Utility District No. 1

COLLIN COUNTY, TEXAS

HUITT-ZOLLARS

DESIGN	CHECKED	DATE	SCALE	NOTES	JOB NO.	SHT. NO.
HZI	HZI		1"= 50'		01-3905-52	05-05

I:/proj/0139050/01390552-CCW&WW EXT/dgn/ccw-ww-st05.dgn

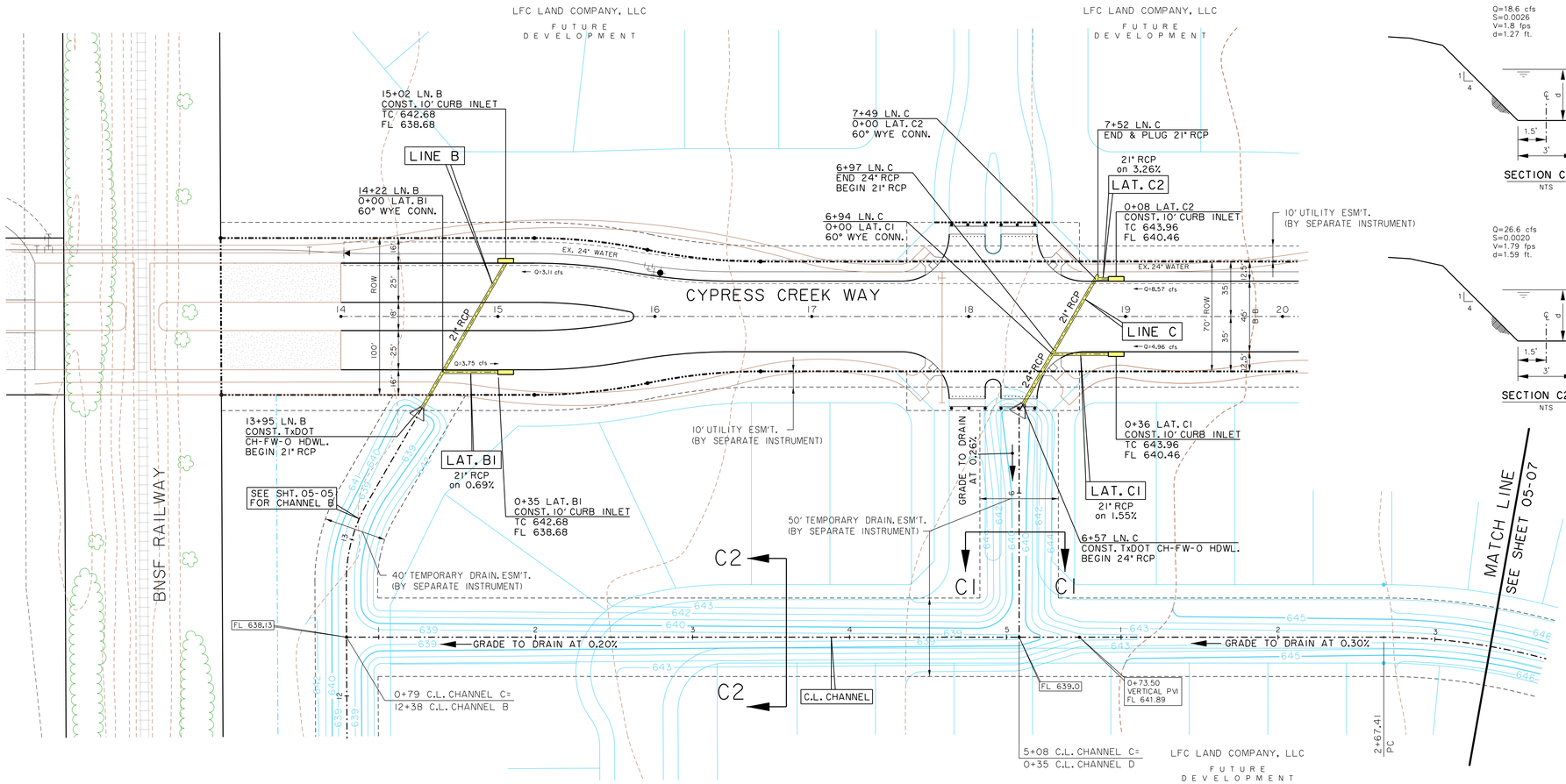

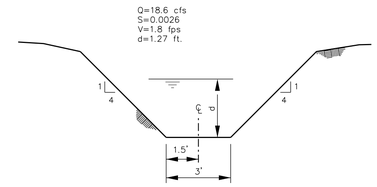

SECTION C1-C1
NTS

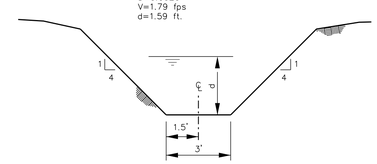

SECTION C2-C2
NTS

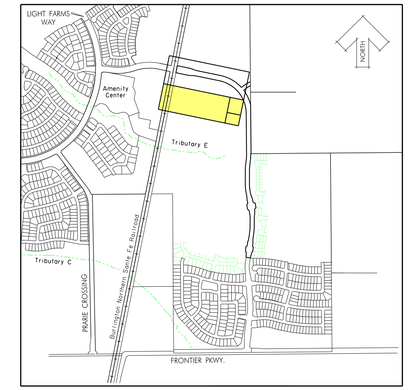

KEY MAP
NTS

N

0 20 40 60 80
SCALE IN FEET

LEGEND

- PROPOSED STORM SEWER (RCP)
- EXISTING STORM SEWER (RCP)
- PROPOSED STORM INLET
- EXISTING STORM INLET
- PROPOSED STORM MANHOLE
- EXISTING STORM MANHOLE
- SURFACE FLOW DIRECTION

BENCHMARKS:

BM #5
Square cut on top concrete headwall, 5' west of edge of pavement of Frontier Parkway, 56 feet south of centerline of County Road No. 5, 485 feet east of centerline County Road No. 51.

N=7147548.47
E=2488493.86
Elev. = 652.94

BM #8
Square cut northeast corner of concrete headwall, north side of County Road 5, 1200 feet +- east of the intersection of County Road 5 and Frontier Parkway.
Elev. = 662.56

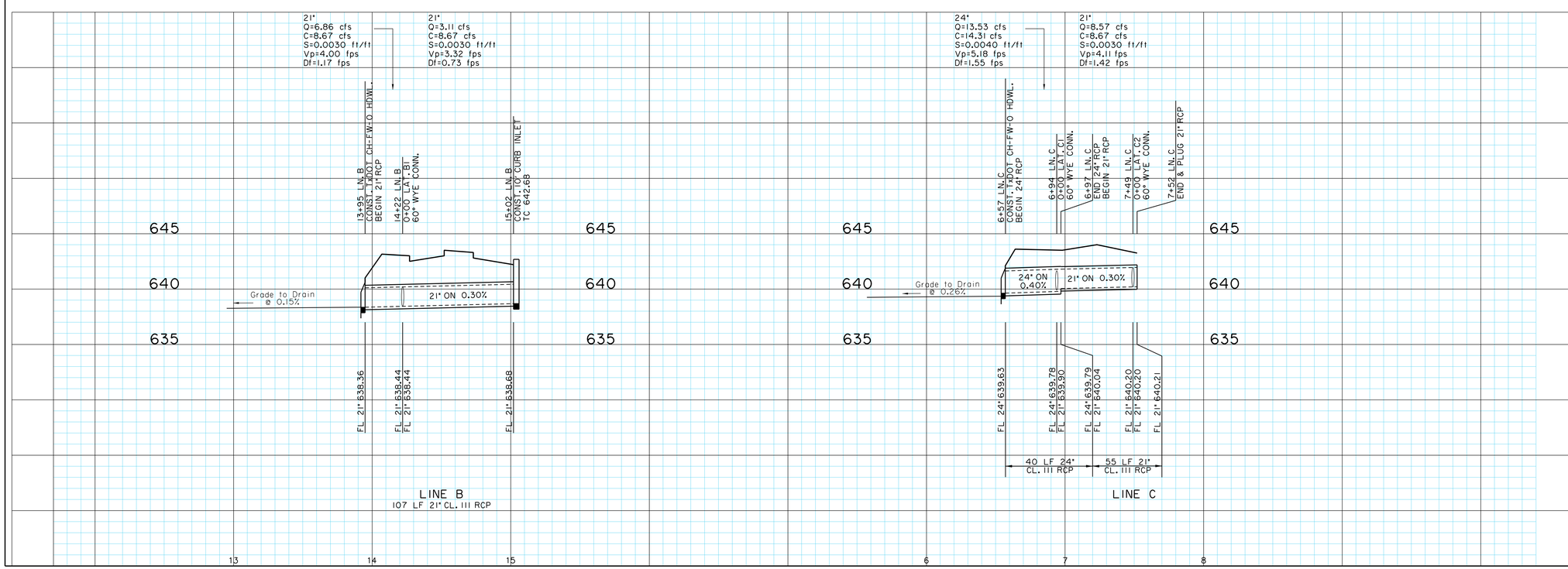

STATE OF TEXAS
ROBERT M. STENGELE
50145
REGISTERED
PROFESSIONAL ENGINEER
3-25-16

Huitt-Zollars, Inc.
Firm Registration No. F-761

RECORD DRAWING

THESE RECORD DOCUMENTS HAVE BEEN PREPARED BASED ON INFORMATION PROVIDED BY OTHERS. THE DESIGN PROFESSIONAL IS UNDER NO OBLIGATION OR DUTY TO VERIFY THE ACCURACY AND/OR COMPLETENESS OF THIS INFORMATION AND HAS NOT DONE SO. THE DESIGN PROFESSIONAL SHALL NOT BE RESPONSIBLE FOR ANY ERRORS OR OMISSION THAT MAY BE INCORPORATED AS A RESULT OF ERRONEOUS INFORMATION PROVIDED BY OTHERS.

STORM SEWER PLAN & PROFILE
LINE 'B' & LINE 'C'

LIGHT FARMS

LFC Land Company LLC

Collin County Municipal Utility District No. 1

COLLIN COUNTY, TEXAS

HUITT-ZOLLARS

DESIGN	CHECKED	DATE	SCALE	NOTES	JOB NO.	SHT. NO.
HZI	HZI		H: 1"=40' V: 1"= 5'		01-3905-52	05-06

I:/proj/01390501/01390552-CCW&WW EXT/dgn/ccw-ww-s106.dgn

STORM SEWER - LINE 'B' & LINE 'C'

P-201508-01

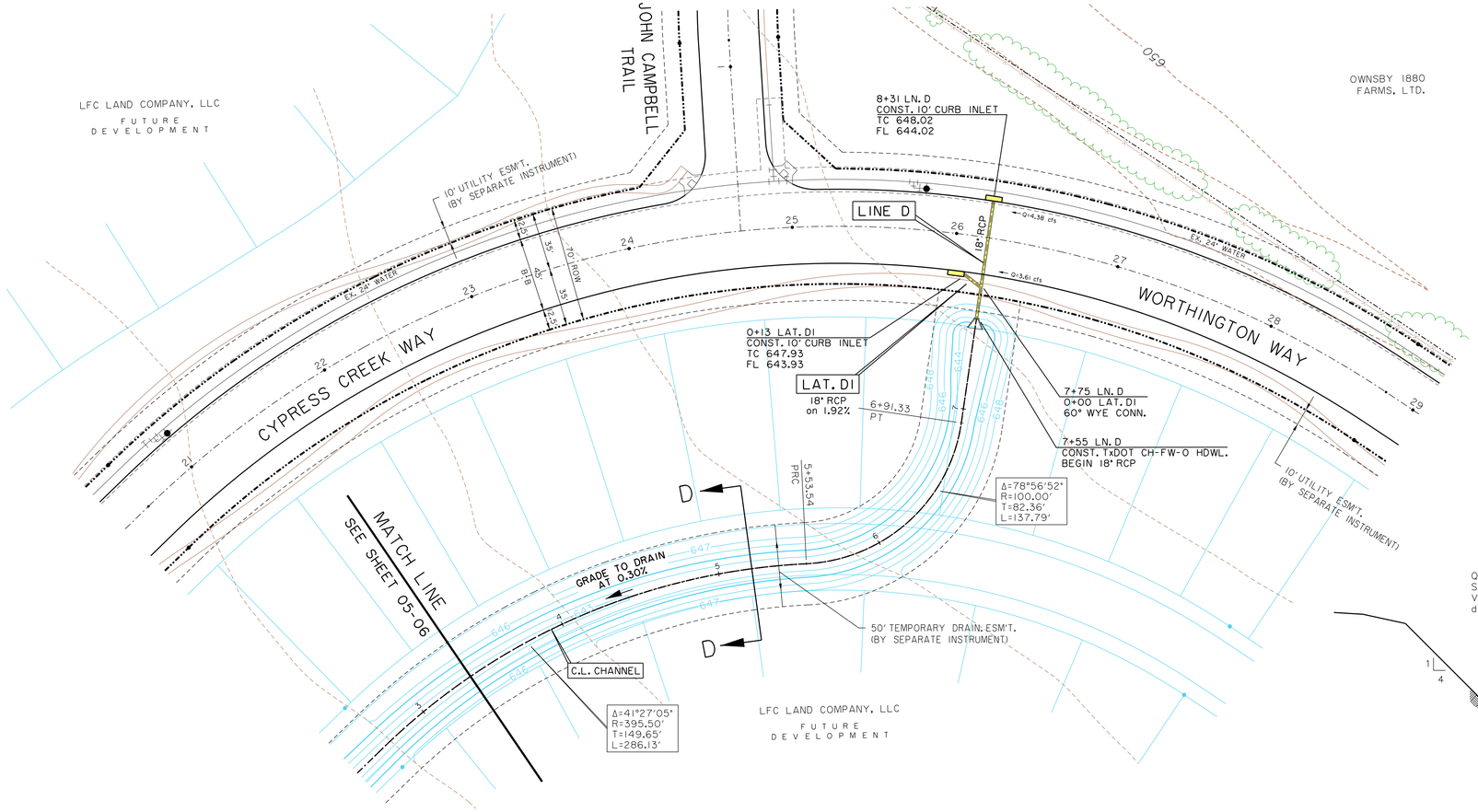

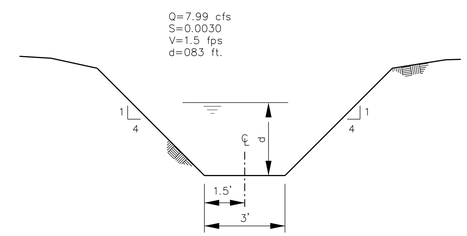

SECTION D-D
NTS

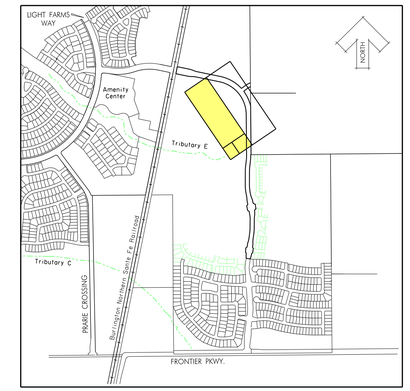

KEY MAP
NTS

SCALE IN FEET

LEGEND

- PROPOSED STORM SEWER (RCP)
- EXISTING STORM SEWER (RCP)
- PROPOSED STORM INLET
- EXISTING STORM INLET
- PROPOSED STORM MANHOLE
- EXISTING STORM MANHOLE
- SURFACE FLOW DIRECTION

BENCHMARKS:

BM #5
Square cut on top concrete headwall, 5' west of edge of pavement of Frontier Parkway, 56 feet south of centerline of County Road No. 5, 485 feet east of centerline County Road No. 51.

N=7147548.47
E=2488493.86
Elev. = 652.94

BM #8
Square cut northeast corner of concrete headwall, north side of County Road 5, 1200 feet +- east of the intersection of County Road 5 and Frontier Parkway.
Elev. = 662.56

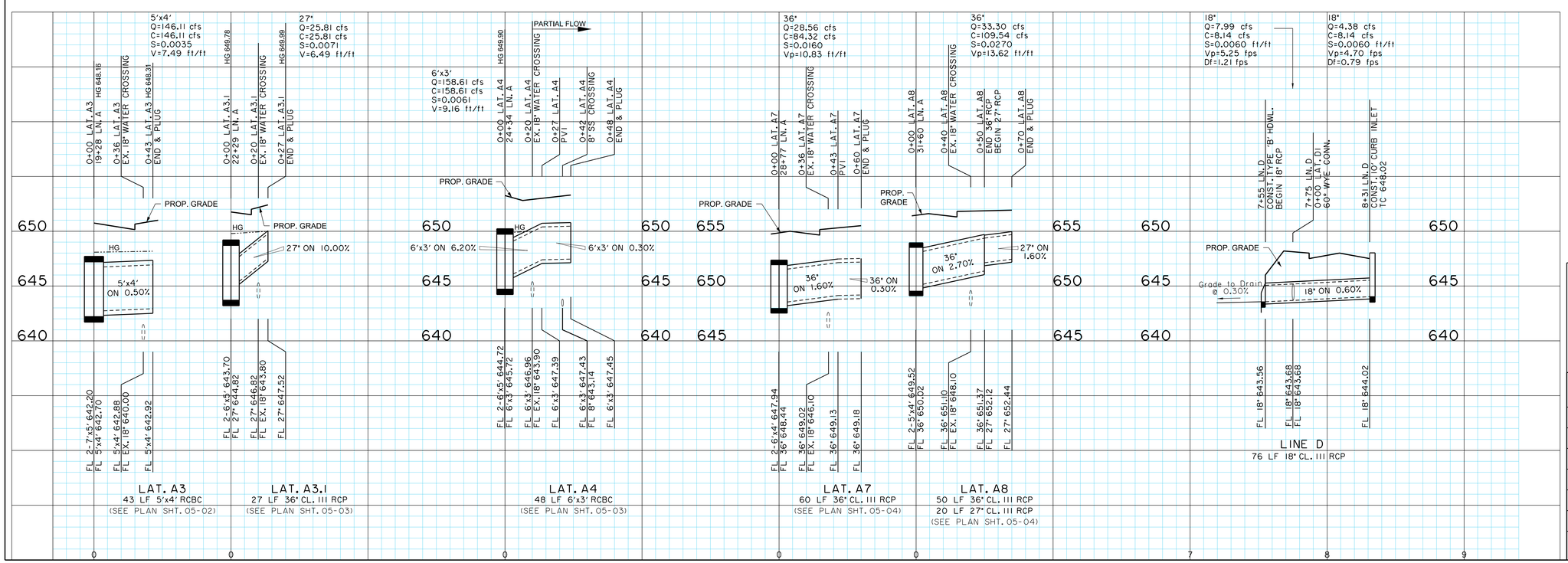

ROBERT M. STENGELE
50145
REGISTERED PROFESSIONAL ENGINEER
STATE OF TEXAS
9-25-16

Huitt-Zollars, Inc.
Firm Registration No. F-761

RECORD DRAWING

THESE RECORD DOCUMENTS HAVE BEEN PREPARED BASED ON INFORMATION PROVIDED BY OTHERS. THE DESIGN PROFESSIONAL IS UNDER NO OBLIGATION OR DUTY TO VERIFY THE ACCURACY AND/OR COMPLETENESS OF THIS INFORMATION AND HAS NOT DONE SO. THE DESIGN PROFESSIONAL SHALL NOT BE RESPONSIBLE FOR ANY ERRORS OR OMISSION THAT MAY BE INCORPORATED AS A RESULT OF ERRONEOUS INFORMATION PROVIDED BY OTHERS.

STORM SEWER PLAN & PROFILE
LINE D, LAT. A3, LAT. A4, LAT. A7 & LAT. A8

LIGHT FARMS

LFC Land Company LLC

Collin County Municipal Utility District No. 1

COLLIN COUNTY, TEXAS

HUITT-ZOLLARS

DESIGN	CHECKED	DATE	SCALE	NOTES	JOB NO.	SHT. NO.
HZI	HZI		H: 1"=40' V: 1"= 5'		01-3905-52	05-07

I:/proj/0139050I/0139055 2-CW&WW EXT/dgn/ccw-ww-s107.dgn

STORM SEWER - LINE D, LAT. A3, LAT. A4, LAT. A7 & LAT. A8 P-201508-01

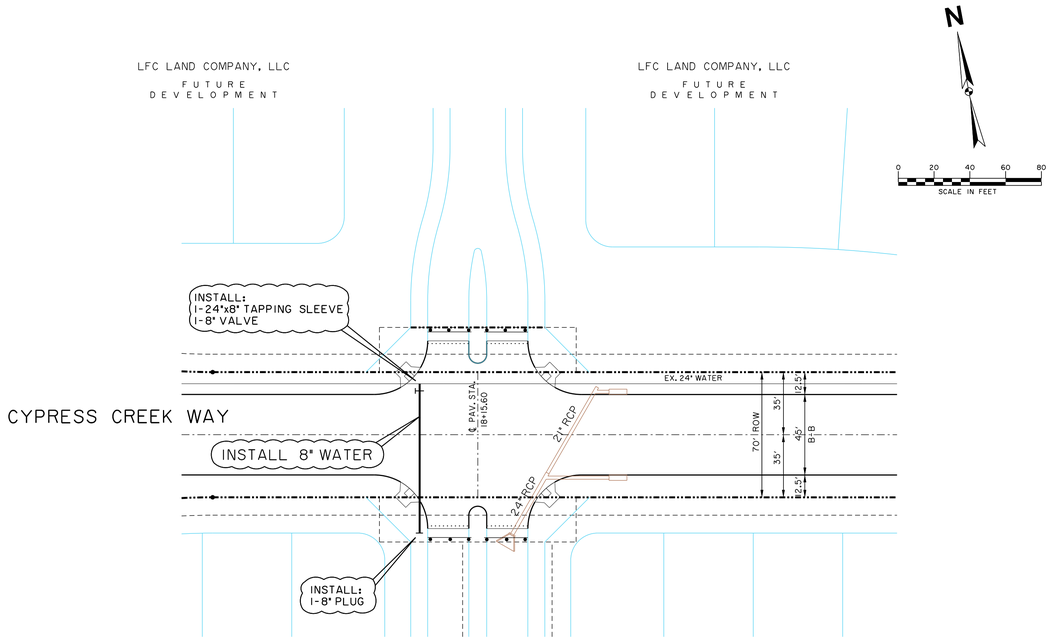

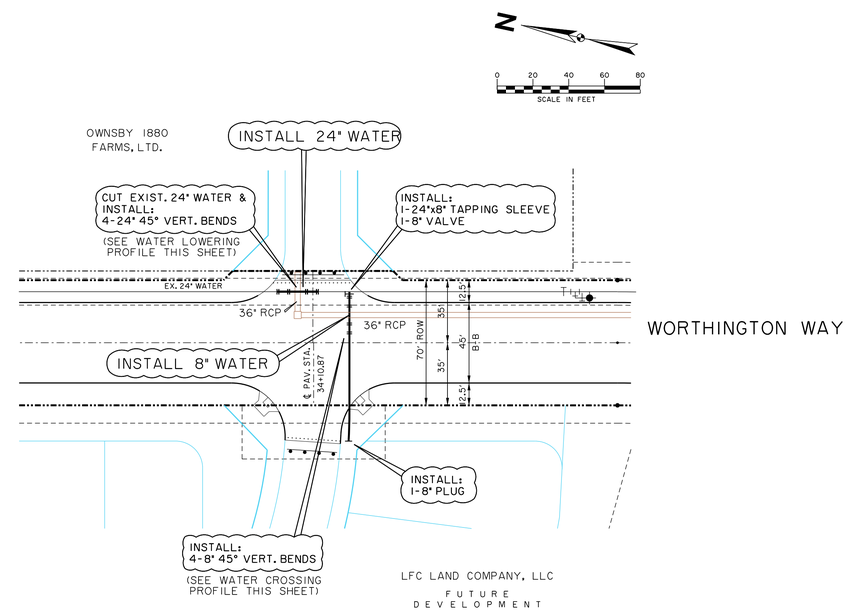

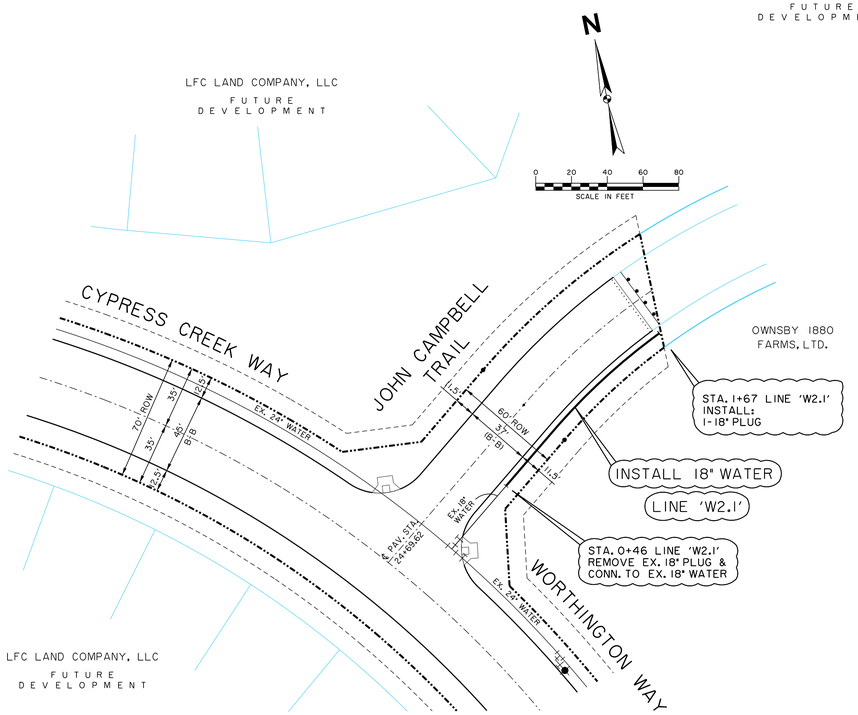

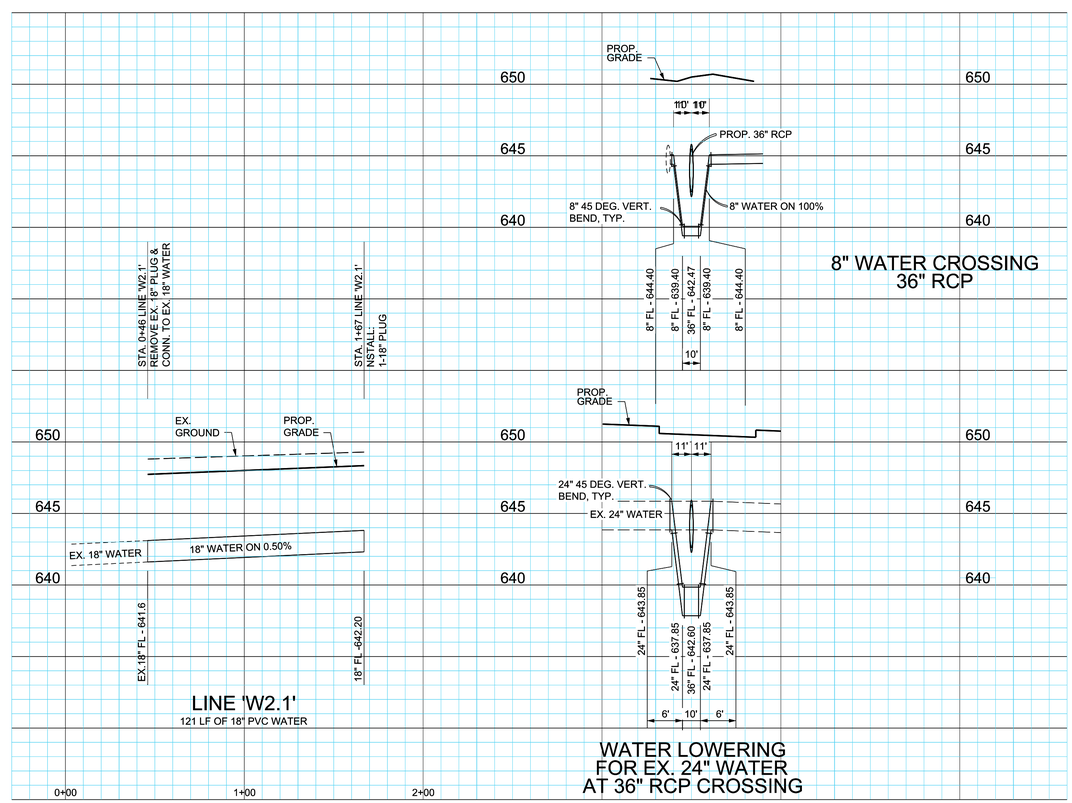

BENCHMARKS:

BM #5
Square cut on top concrete headwall, 5' west of edge of pavement of Frontier Parkway, 56 feet south of centerline of County Road No. 5, 485 feet east of centerline County Road No. 51.

N=7147548.47
E=2488493.86
Elev. = 652.94

BM #8
Square cut northeast corner of concrete headwall, north side of County Road 5, 1200 feet +- east of the intersection of County Road 5 and Frontier Parkway.
Elev. = 662.56

STATE OF TEXAS
ROBERT M. STENGELE
50145
REGISTERED
PROFESSIONAL ENGINEER
3-25-16

Huitt-Zollars, Inc.
Firm Registration No. F-761

RECORD DRAWING

THESE RECORD DOCUMENTS HAVE BEEN PREPARED BASED ON INFORMATION PROVIDED BY OTHERS. THE DESIGN PROFESSIONAL IS UNDER NO OBLIGATION OR DUTY TO VERIFY THE ACCURACY AND/OR COMPLETENESS OF THIS INFORMATION AND HAS NOT DONE SO. THE DESIGN PROFESSIONAL SHALL NOT BE RESPONSIBLE FOR ANY ERRORS OR OMISSION THAT MAY BE INCORPORATED AS A RESULT OF ERRONEOUS INFORMATION PROVIDED BY OTHERS.

WATER PLAN

LIGHT FARMS

LFC Land Company LLC

Collin County Municipal Utility District No. 1

COLLIN COUNTY, TEXAS

HUITT-ZOLLARS

DESIGN	CHECKED	DATE	SCALE	NOTES	JOB NO.	SHT. NO.
HZI	HZI		H: 1"=40' V: 1"= 5'		01-3905-52	06-01

I:/proj/01390501/01390552-CCW&WW EXT/dgn/ccw-ww-ws01.dgn

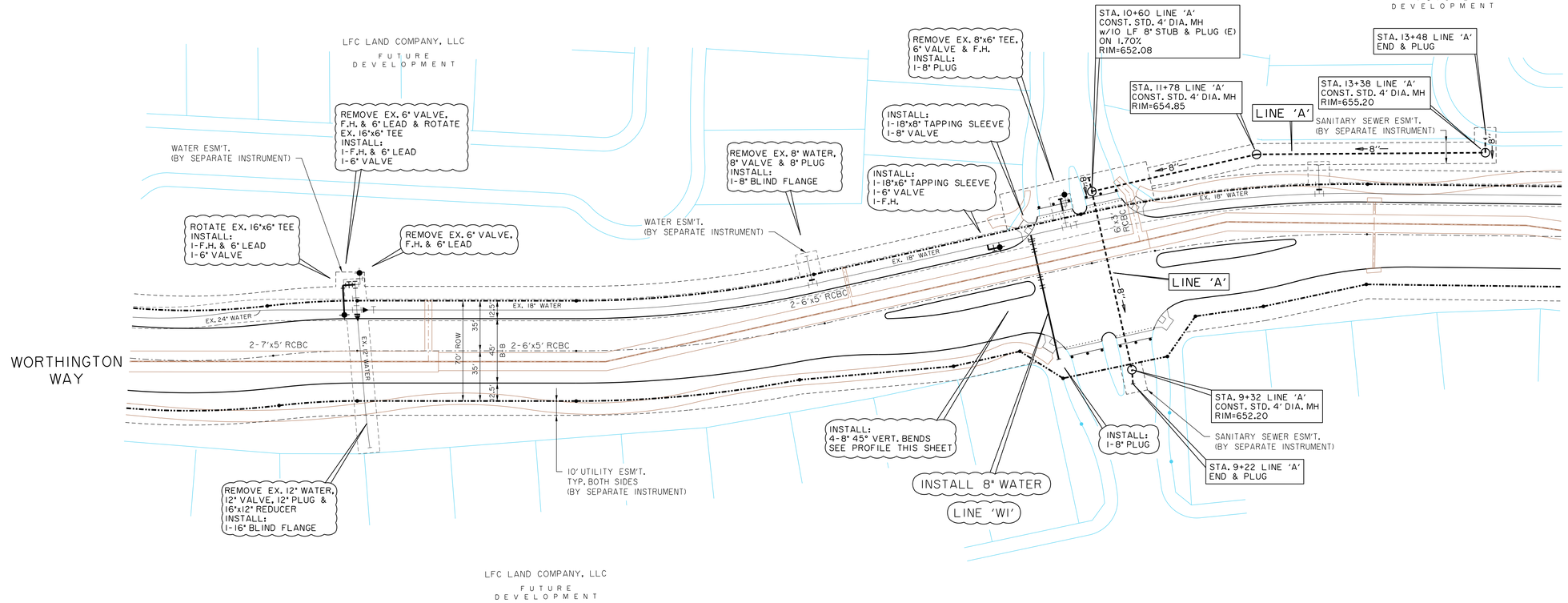

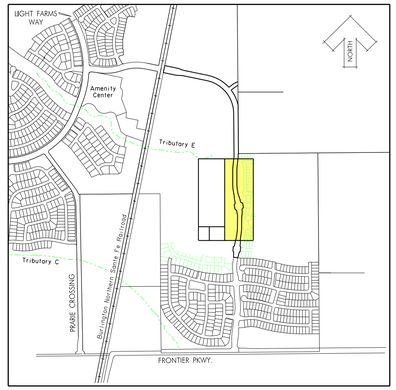

KEY MAP
NTS

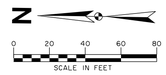

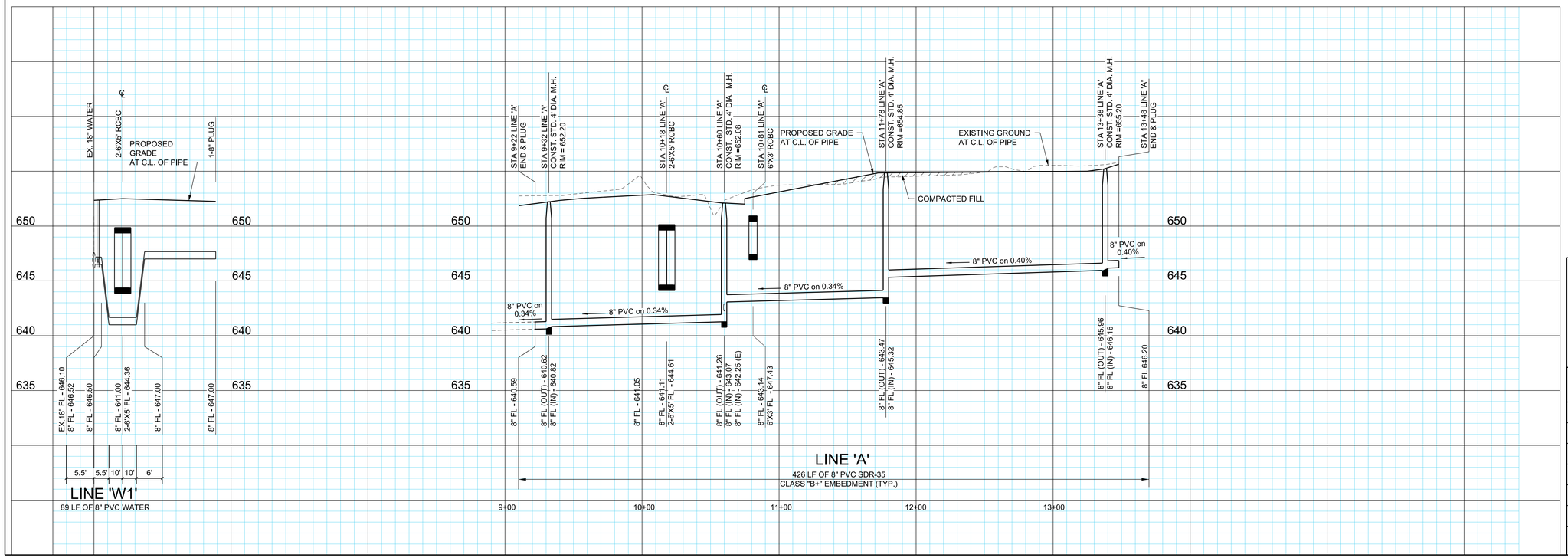

BENCHMARKS:

BM #5
Square cut on top concrete headwall, 5' west of edge of pavement of Frontier Parkway, 56 feet south of centerline of County Road No. 5, 485 feet east of centerline County Road No. 51.

N=7147548.47
E=2488493.86
Elev. = 652.94

BM #8
Square cut northeast corner of concrete headwall, north side of County Road 5, 1200 feet +- east of the intersection of County Road 5 and Frontier Parkway.
Elev. = 662.56

STATE OF TEXAS
ROBERT M. STENGELE
50145
REGISTERED PROFESSIONAL ENGINEER
3-25-16

Huitt-Zollars, Inc.
Firm Registration No. F-761

RECORD DRAWING

THESE RECORD DOCUMENTS HAVE BEEN PREPARED BASED ON INFORMATION PROVIDED BY OTHERS. THE DESIGN PROFESSIONAL IS UNDER NO OBLIGATION OR DUTY TO VERIFY THE ACCURACY AND/OR COMPLETENESS OF THIS INFORMATION AND HAS NOT DONE SO. THE DESIGN PROFESSIONAL SHALL NOT BE RESPONSIBLE FOR ANY ERRORS OR OMISSION THAT MAY BE INCORPORATED AS A RESULT OF ERRONEOUS INFORMATION PROVIDED BY OTHERS.

WATER & SANITARY SEWER PLAN & PROFILE

LIGHT FARMS

LFC Land Company LLC

Collin County Municipal Utility District No. 1

COLLIN COUNTY, TEXAS

HUITT-ZOLLARS

DESIGN	CHECKED	DATE	SCALE	NOTES	JOB NO.	SHT. NO.
HZI	HZI		H: 1"=40' V: 1"= 5'		01-3905-52	06-02

I:/proj/01390501/01390552-CCW&WW EXT/dgn/ccw-ww-ws02.dgn

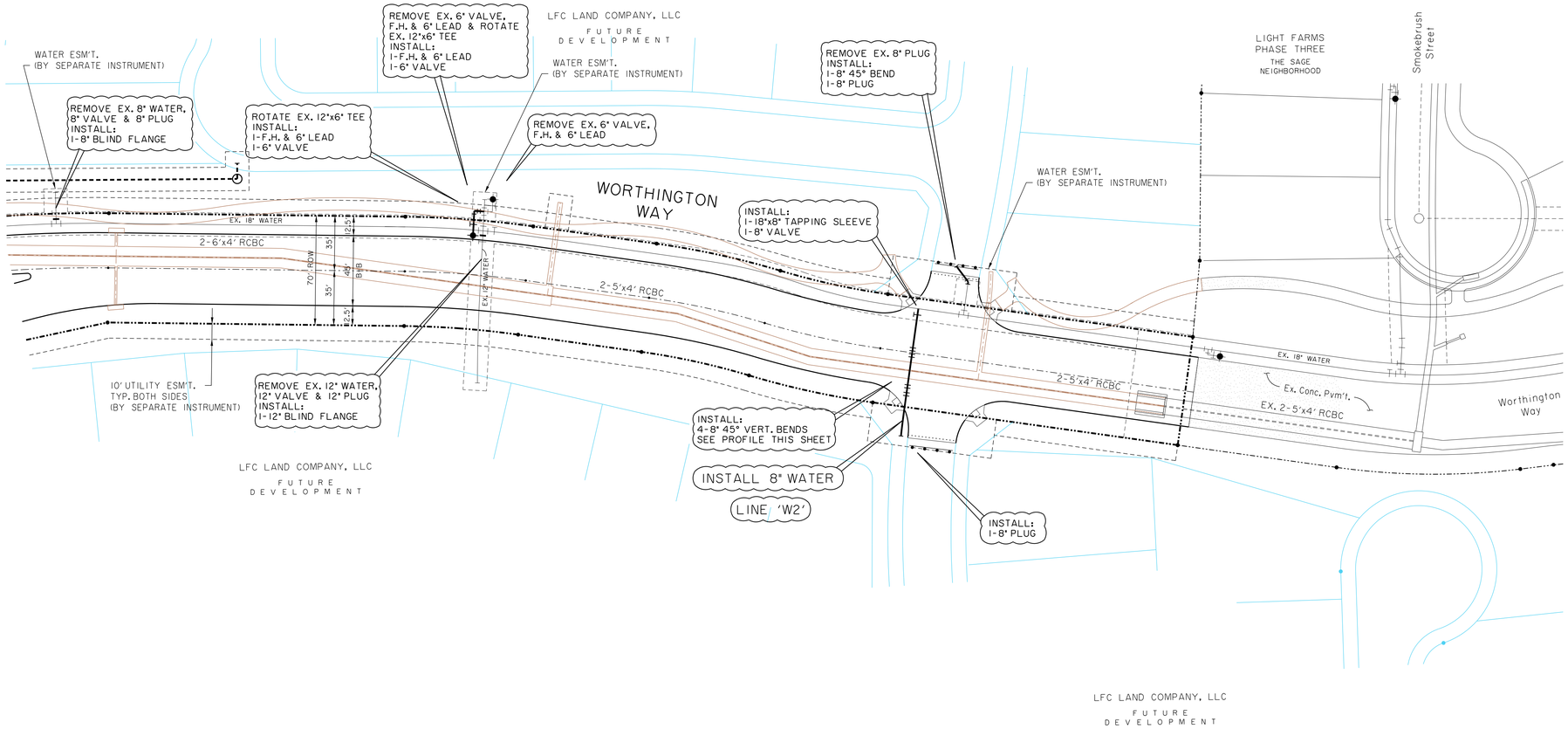

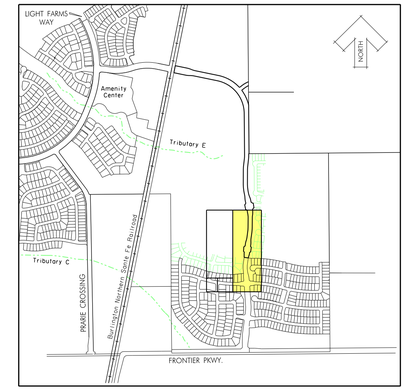

KEY MAP
NTS

N

0 20 40 60 80
SCALE IN FEET

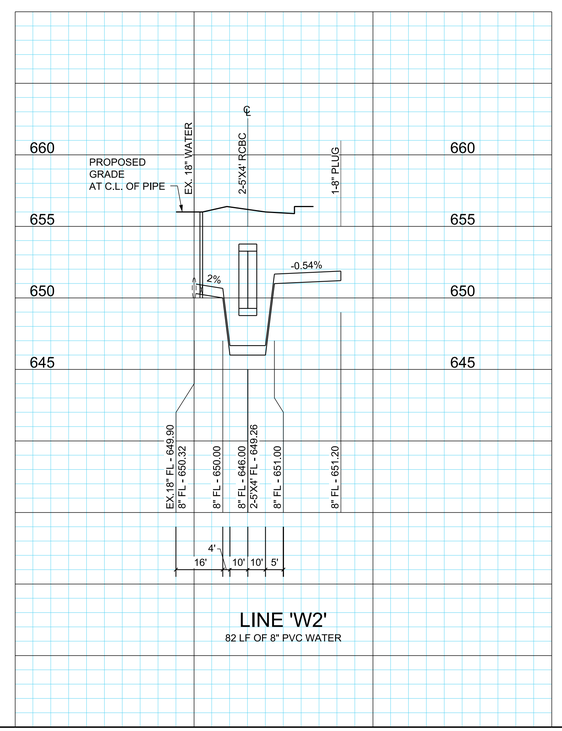

LINE 'W2'
82 LF OF 8" PVC WATER

BENCHMARKS:

BM #5
Square cut on top concrete headwall, 5' west of edge of pavement of Frontier Parkway, 56 feet south of centerline of County Road No. 5, 485 feet east of centerline County Road No. 51.

N=7147548.47
E=2488493.86
Elev. = 652.94

BM #8
Square cut northeast corner of concrete headwall, north side of County Road 5, 1200 feet +- east of the intersection of County Road 5 and Frontier Parkway.
Elev. = 662.56

STATE OF TEXAS
ROBERT M. STENGELE
50145
REGISTERED
PROFESSIONAL ENGINEER
3-25-16

Huitt-Zollars, Inc.
Firm Registration No. F-761

RECORD DRAWING

THESE RECORD DOCUMENTS HAVE BEEN PREPARED BASED ON INFORMATION PROVIDED BY OTHERS. THE DESIGN PROFESSIONAL IS UNDER NO OBLIGATION OR DUTY TO VERIFY THE ACCURACY AND/OR COMPLETENESS OF THIS INFORMATION AND HAS NOT DONE SO. THE DESIGN PROFESSIONAL SHALL NOT BE RESPONSIBLE FOR ANY ERRORS OR OMISSION THAT MAY BE INCORPORATED AS A RESULT OF ERRONEOUS INFORMATION PROVIDED BY OTHERS.

WATER PLAN & PROFILE

LIGHT FARMS

LFC Land Company LLC

Collin County Municipal Utility District No. 1

COLLIN COUNTY, TEXAS

HUITT-ZOLLARS

DESIGN	CHECKED	DATE	SCALE	NOTES	JOB NO.	SHT. NO.
HZI	HZI		H: 1"=40' V: 1"= 5'		01-3905-52	06-03

I:/proj/01390501/01390552-CCW&WW EXT/dgn/ccw-ww-ws03.dgn

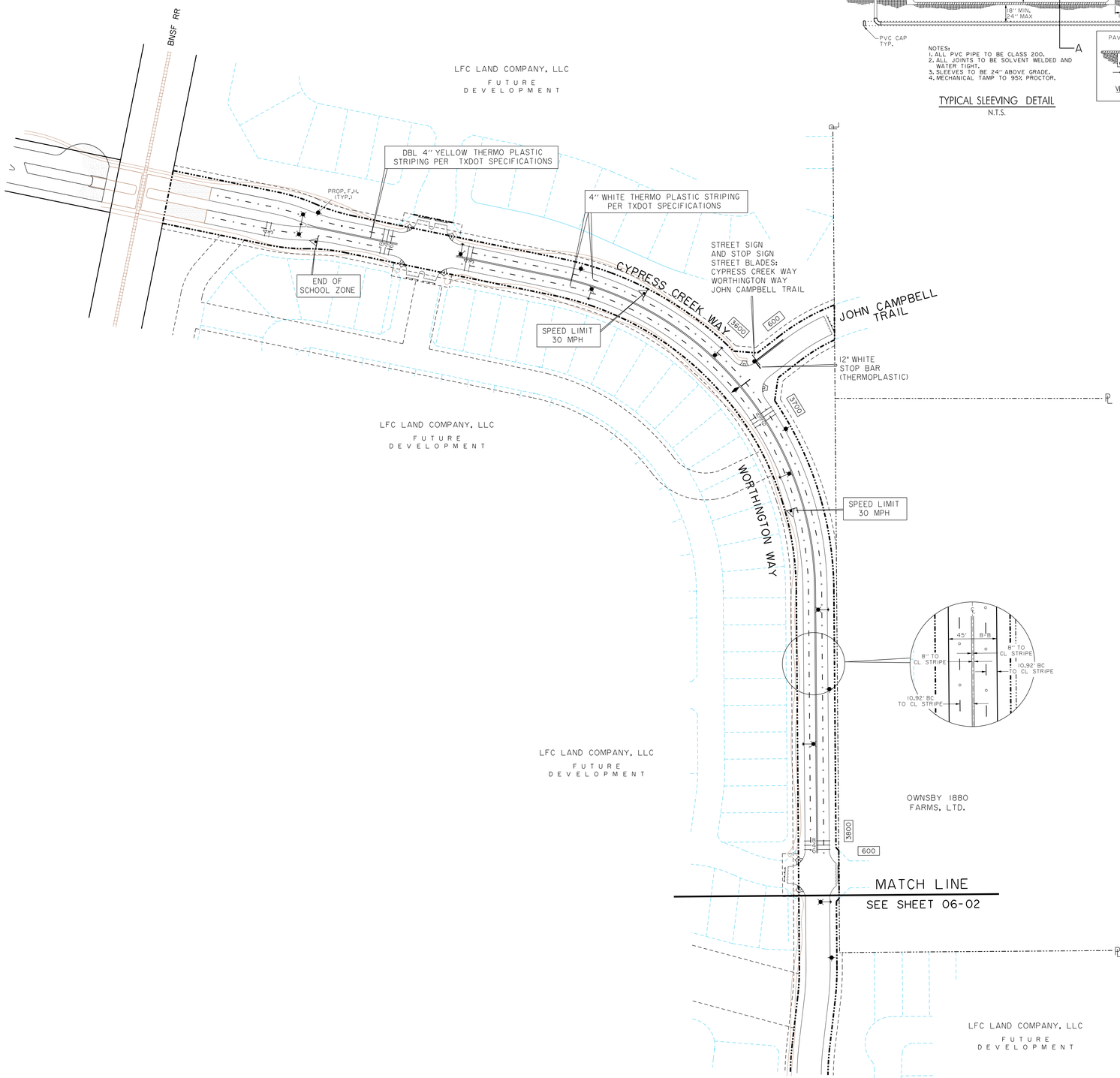

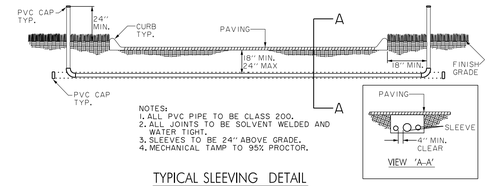

NOTES:
1. ALL PVC PIPE TO BE CLASS 200.
2. ALL JOINTS TO BE SOLVENT WELDED AND WATER TIGHT.
3. SLEEVES TO BE 24" ABOVE GRADE.
4. MECHANICAL TAMP TO 95% PROCTOR.

TYPICAL SLEEVING DETAIL
N.T.S.

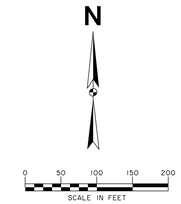

LEGEND

- SINGLE LIGHT (BY GCEC)
- SINGLE STREET LIGHT (BY GCEC)
- DOUBLE LIGHT (BY GCEC)
- STREET SIGN
- STREET SIGN AND STOP SIGN (SEE STREET SIGN DETAILS)
- STOP BAR (PER CELINA STD. DETAILS)
- STREET SIGN AND STOP SIGN ON SINGLE LIGHT POLE
- REGULATORY SIGN (SEE STREET SIGN DETAILS)

NOTE:
SIGN POST AND LIGHT POST TYPE AND COLOR TO BE APPROVED BY THE CITY.

LEGEND

2-2" SLEEVE	—2-2—
3" SLEEVE	—3—
4" SLEEVE	- - -4- - -
6" SLEEVE	·····6·····
8" SLEEVE	·····8·····
12" SLEEVE	—12—

NOTE:
STREET LIGHT LOCATIONS SHOWN ARE FOR GENERAL LOCATION ONLY AND TO BE COORDINATED WITH AND APPROVED BY THE CITY PRIOR TO INSTALLATION BY THE ELECTRIC COMPANY PROVIDER.

REFER TO SHEET 09-01 FOR STREET LIGHT, SIGN AND POLE DETAILS.

BENCHMARKS:

BM #5
Square cut on top concrete headwall, 5' west of edge of pavement of Frontier Parkway, 56 feet south of centerline of County Road No. 5, 485 feet east of centerline County Road No. 51.

N=7147548.47
E=2488493.86
Elev. = 652.94

BM #8
Square cut northeast corner of concrete headwall, north side of County Road 5, 1200 feet +- east of the intersection of County Road 5 and Frontier Parkway.
Elev. = 662.56

STATE OF TEXAS
ROBERT M. STENGELE
50145
REGISTERED
PROFESSIONAL ENGINEER
3-25-16

Huitt-Zollars, Inc.
Firm Registration No. F-761

RECORD DRAWING

THESE RECORD DOCUMENTS HAVE BEEN PREPARED BASED ON INFORMATION PROVIDED BY OTHERS. THE DESIGN PROFESSIONAL IS UNDER NO OBLIGATION OR DUTY TO VERIFY THE ACCURACY AND/OR COMPLETENESS OF THIS INFORMATION AND HAS NOT DONE SO. THE DESIGN PROFESSIONAL SHALL NOT BE RESPONSIBLE FOR ANY ERRORS OR OMISSION THAT MAY BE INCORPORATED AS A RESULT OF ERRONEOUS INFORMATION PROVIDED BY OTHERS.

LIGHTING, SIGNAGE, STRIPING & SLEEVING PLAN

LIGHT FARMS

LFC Land Company LLC

Collin County Municipal Utility District No. 1

COLLIN COUNTY, TEXAS

HUITT-ZOLLARS

DESIGN	CHECKED	DATE	SCALE	NOTES	JOB NO.	SHT. NO.
HZI	HZI		1"=100'		01-3905-52	07-01

I:/proj/01390501/01390552-CCW&WW EXT/dgn/ccw-ww-sin01.dgn

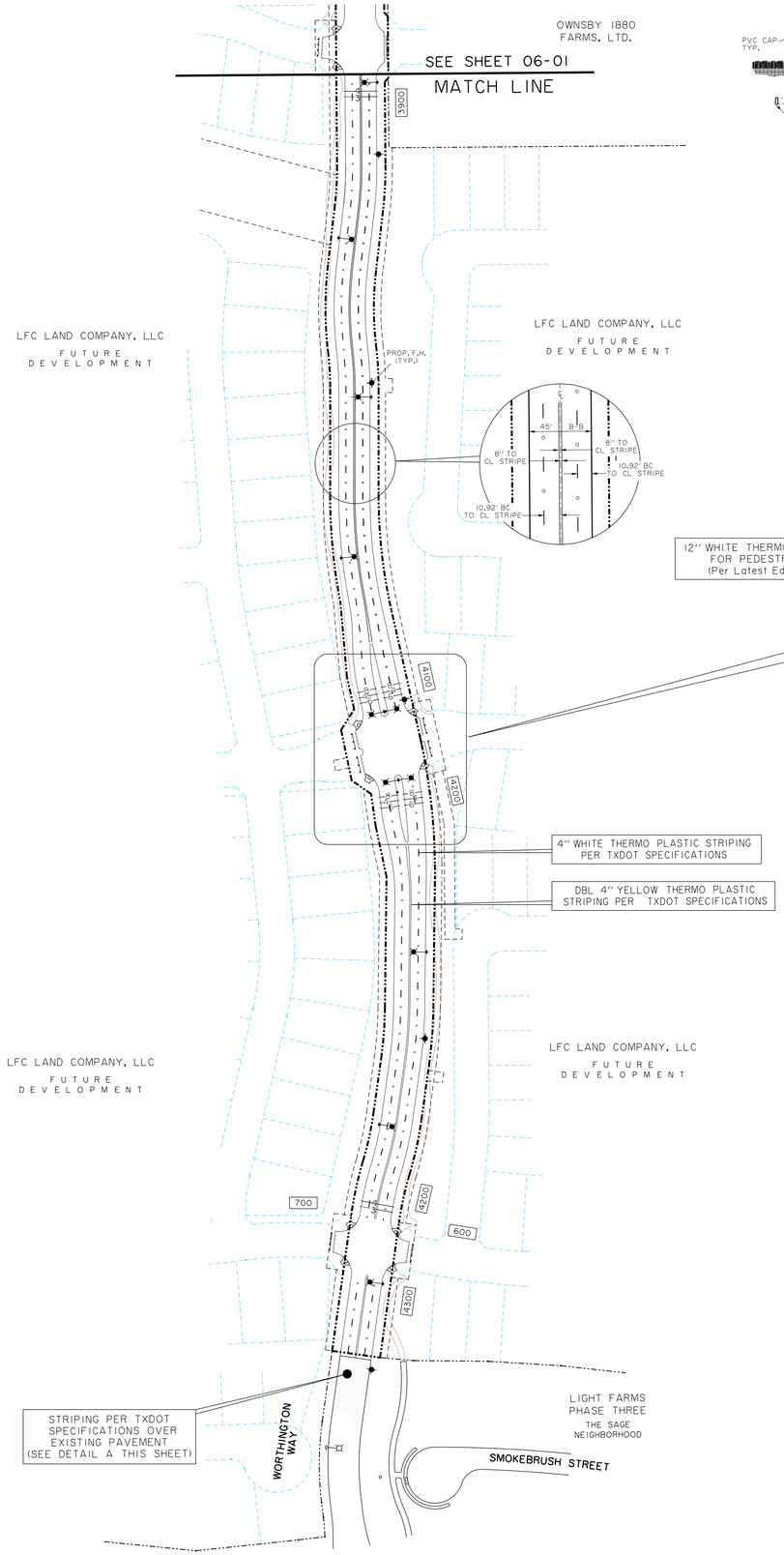

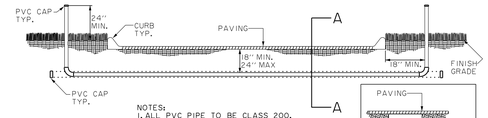

NOTES:
1. ALL PVC PIPE TO BE CLASS 200.
2. ALL JOINTS TO BE SOLVENT WELDED AND WATER TIGHT.
3. SLEEVES TO BE 24" ABOVE GRADE.
4. MECHANICAL TAMP TO 95% PROCTOR.

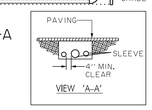

TYPICAL SLEEVING DETAIL
N.T.S.

N

0 50 100 150 200
SCALE IN FEET

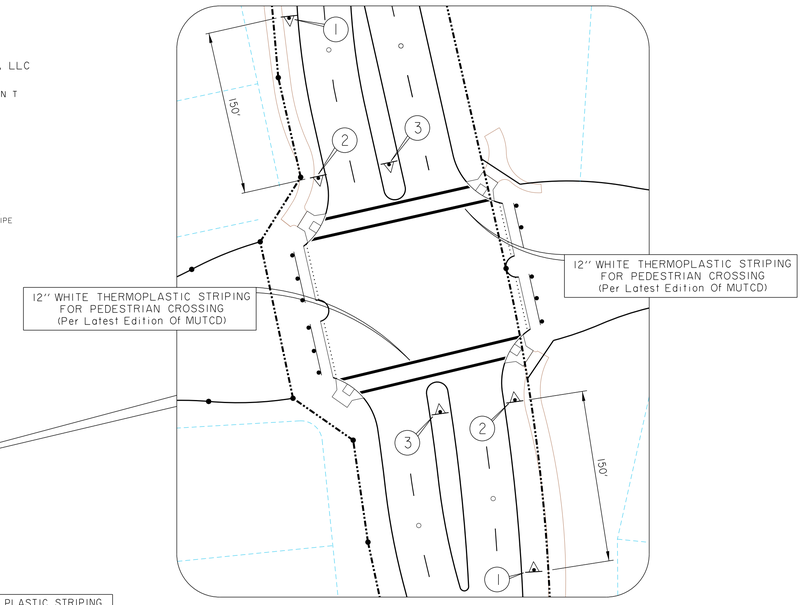

CROSSWALK SIGN (W11-2) (30x30) AHEAD (W16-9P) (24X12)

CROSSWALK SIGN (W11-2) (30x30) LEFT ARROW (W16-7PL) (24X12)

CROSSWALK SIGN (W11-2) (30x30) RIGHT ARROW (W16-7PL) (24X12)

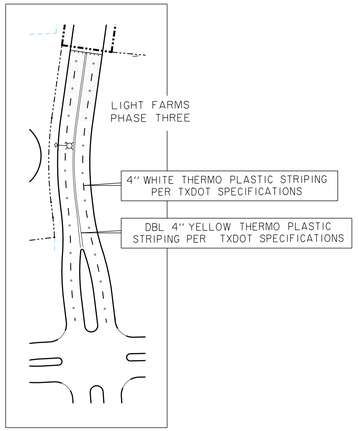

DETAIL A

LEGEND

- SINGLE LIGHT (BY GCEC)
- SINGLE STREET LIGHT (BY GCEC)
- DOUBLE LIGHT (BY GCEC)
- STREET SIGN
- STREET SIGN AND STOP SIGN (SEE STREET SIGN DETAILS)
- STOP BAR (PER CELINA STD. DETAILS)
- STREET SIGN AND STOP SIGN ON SINGLE LIGHT POLE
- REGULATORY SIGN (SEE STREET SIGN DETAILS)

NOTE:
SIGN POST AND LIGHT POST TYPE AND COLOR TO BE APPROVED BY THE CITY.

LEGEND

2-2" SLEEVE	—2-2—
3" SLEEVE	—3—
4" SLEEVE	- - -4- - -
6" SLEEVE	·····6·····
8" SLEEVE	·····8·····
12" SLEEVE	—12—

NOTE:
STREET LIGHT LOCATIONS SHOWN ARE FOR GENERAL LOCATION ONLY AND TO BE COORDINATED WITH AND APPROVED BY THE CITY PRIOR TO INSTALLATION BY THE ELECTRIC COMPANY PROVIDER.

REFER TO SHEET 09-01 FOR STREET LIGHT, SIGN AND POLE DETAILS.

BENCHMARKS:

BM #5
Square cut on top concrete headwall, 5' west of edge of pavement of Frontier Parkway, 56 feet south of centerline of County Road No. 5, 485 feet east of centerline County Road No. 51.

N=7147548.47
E=2488493.86
Elev. = 652.94

BM #8
Square cut northeast corner of concrete headwall, north side of County Road 5, 1200 feet +- east of the intersection of County Road 5 and Frontier Parkway.
Elev. = 662.56

STATE OF TEXAS
ROBERT M. STENGELE
50145
REGISTERED PROFESSIONAL ENGINEER
Robert M. Stengele
3-25-16

Huitt-Zollars, Inc.
Firm Registration No. F-761

RECORD DRAWING

THESE RECORD DOCUMENTS HAVE BEEN PREPARED BASED ON INFORMATION PROVIDED BY OTHERS. THE DESIGN PROFESSIONAL IS UNDER NO OBLIGATION OR DUTY TO VERIFY THE ACCURACY AND/OR COMPLETENESS OF THIS INFORMATION AND HAS NOT DONE SO. THE DESIGN PROFESSIONAL SHALL NOT BE RESPONSIBLE FOR ANY ERRORS OR OMISSION THAT MAY BE INCORPORATED AS A RESULT OF ERRONEOUS INFORMATION PROVIDED BY OTHERS.

LIGHTING, SIGNAGE, STRIPING & SLEEVING PLAN

LIGHT FARMS

LFC Land Company LLC

Collin County Municipal Utility District No. 1

COLLIN COUNTY, TEXAS

HUITT-ZOLLARS

DESIGN	CHECKED	DATE	SCALE	NOTES	JOB NO.	SHT. NO.
HZI	HZI		1"=100'		01-3905-52	07-02

I:/proj/013905001/01390552-CCW&WW EXT/dgn/ccw-ww-sin02.dgn

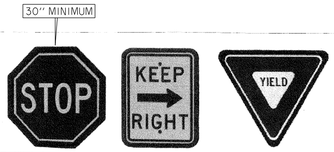

Cast Aluminum Backplate Highlights:

Heavy cast aluminum design with 1" wide and ¾" thick raised border.

Designed to accept D.O.T. standard street signs in sizes and shapes below.

Easy installation on 3", 4" or 5" O.D., straight, round poles, with no alterations to pole, with two (2) of our 3", 4" or 5" mounting collars.

Installation on 3", 4" or 5" O.D., tapered round poles, may be accomplished by using our 3", 4" or 5" mounting collars with extra setscrews for leveling.

All Stainless Steel hardware

Durable Powder coat finish, (Medium Gloss Black Polyester, Standard).

Custom colors available.

18" Stop Signs available for golf course cart path application.*

Applied Vinyl, aluminum, D.O.T. standard, street signs are available but not included. **(See our "SIGN" section)**

Ordering Information:

Sample catalog number
#TSC-24x24-D-4S-BLK

Type	Size	Orientation	Mounting	Color
TSC	24x24	D	4S	BLK

Stop Sign - Cast Aluminum Back plate, with two mtg. collars:

Type & Nominal Size	Actual size of Stop Sign
STC-18	18" (For Golf Courses Only)
STC-24	24"
STC-30	30"
STC-36	36"

Traffic Sign - Cast Aluminum Back plate with two mtg. collars:

Type & Nominal Size	Actual size of Sign
TSC-6x12	6" x 12" (Needs only one mtg. collar)
TSC-12x18	12" x 18"
TSC-18x18	18" x 18"
TSC-18x24	18" x 24"
TSC-24x24	24" x 24"
TSC-24x30	24" x 30"
TSC-30x30	30" x 30"

Orientation of Traffic Sign
D Diamond

Yield Sign - Cast Aluminum Back plate, with two mtg. collars:

Type & Nominal Size	Actual size of Sign
YDC-30	30"
YDC-36	36"

Mounting collar size and type

3S	Two 3" Mounting Collars for 3" straight pole
4S	Two 4" Mounting Collars for 4" straight pole
5S	Two 5" Mounting Collars for 5" straight pole
3T	Two 3" Mounting Collars for tapered pole
4T	Two 4" Mounting Collars for tapered pole
5T	Two 5" Mounting Collars for tapered pole
6.5T	Two 6.5" x 2" Mounting collars for tapered poles
BOS	Two Bolt or strap on brackets for any pole

Colors

BLK	Medium Gloss Black Polyester (Standard)
BLKP	Medium Gloss Black Polyester, Orange Peel Texture.
RAL-6012	Dark Green Polyester
WHT	White Polyester
CC	Custom Colors.

Notes
1. Contact us for pricing.
2. Mounting collars are shipped in seperate, individual boxes.
3. Applied Vinyl, aluminum, D.O.T. standard, street signs are available but not included. **(See our "SIGN" section)**
4. Tapered poles must be accurately measured at of mounting points. Next size collar must be used when pole diameter is larger than standard size.

Celina Street Sign Example

Street Name: 6" initial uppercase letter followed by 4.5" lowercase letters
Must meet 2009 (or latest) MUTCD requirements
9" flat blank, high intensity prismatic

Front:
(Left to Right)

NOTE:
USE NEW CELINA LOGO

Back:
(Left to Right)

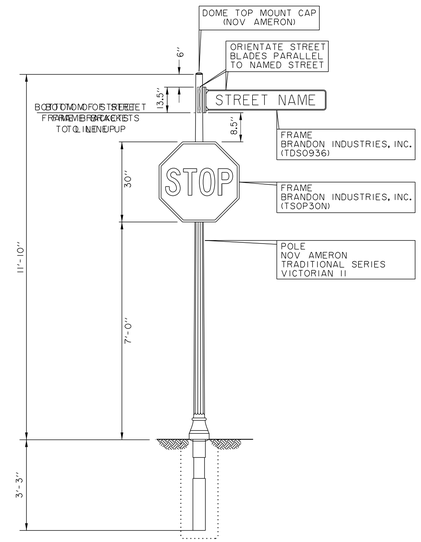

TYPICAL SIGN & POLE DETAIL
30" STOP SIGN
NTS

NOTE:
USE MANUFACTURERS
INSTALLATION GUIDELINES
AND PROCEDURES.
(PER CITY APPROVAL)

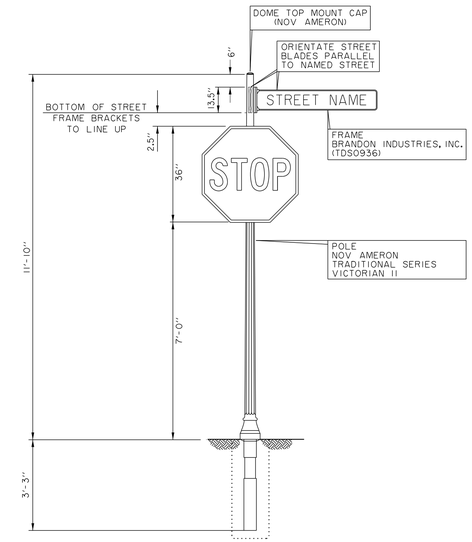

TYPICAL SIGN & POLE DETAIL
36" STOP SIGN
(Cypress Creek Way At Frontier Parkway)
NTS

NOTE:
USE MANUFACTURERS
INSTALLATION GUIDELINES
AND PROCEDURES.
(PER CITY APPROVAL)

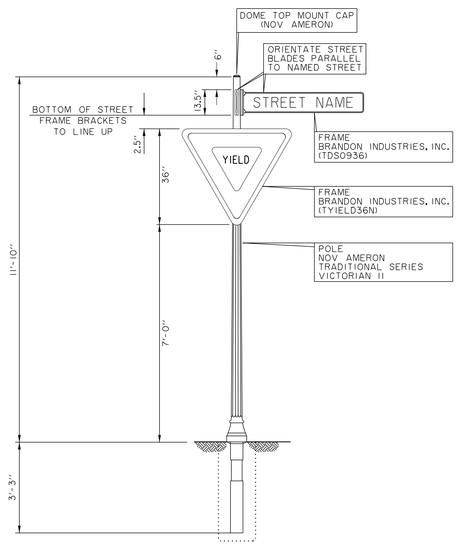

TYPICAL SIGN & POLE DETAIL
36" X 36" YIELD SIGN
NTS

NOTE:
USE MANUFACTURERS
INSTALLATION GUIDELINES
AND PROCEDURES.
(PER CITY APPROVAL)

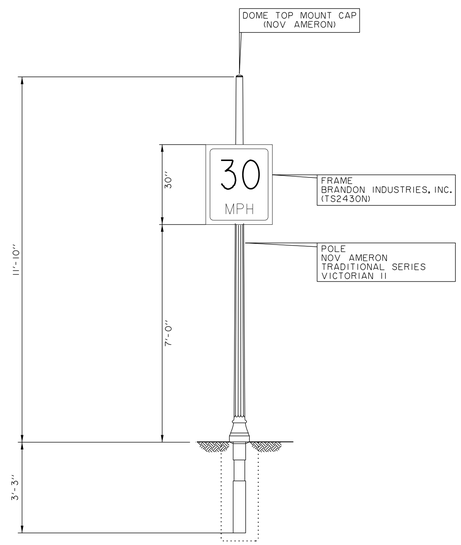

TYPICAL SIGN & POLE DETAIL
24" X 30" SPEED LIMIT SIGN
NTS

NOTE:
USE MANUFACTURERS
INSTALLATION GUIDELINES
AND PROCEDURES.
(PER CITY APPROVAL)

MANUFACTURERS

BRANDON INDUSTRIES, INC.
1601 W. WILMETH ROAD
MCKINNEY, TEXAS
75069-8250
PHONE: 1-800-247-1274

NOV AMERON
SOUTH CENTRAL DIVISION
8505 CLAY HIBBINS ROAD
KELLER, TEXAS
76248
PHINE: 817-999-6867

SPECIFICATIONS ARE NOT MEANT TO EXCLUDE ANY OTHER MANUFACTURER. ANY SPECIFICATION MAY BE REPLACED WITH AN APPROVED EQUAL UPON APPROVAL BY THE CITY OF CELINA.

STREET SIGN DETAILS

LIGHT FARMS

LFC Land Company LLC

Collin County Municipal Utility District No. 1

COLLIN COUNTY, TEXAS

HUITT-ZOLLARS

DESIGN	CHECKED	DATE	SCALE	NOTES	JOB NO.	SHT. NO.
HZI	HZI		NA		01-3905-52	08-01

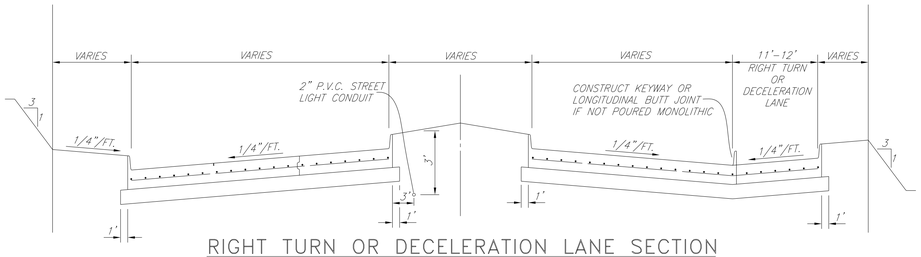

RIGHT TURN OR DECELERATION LANE SECTION

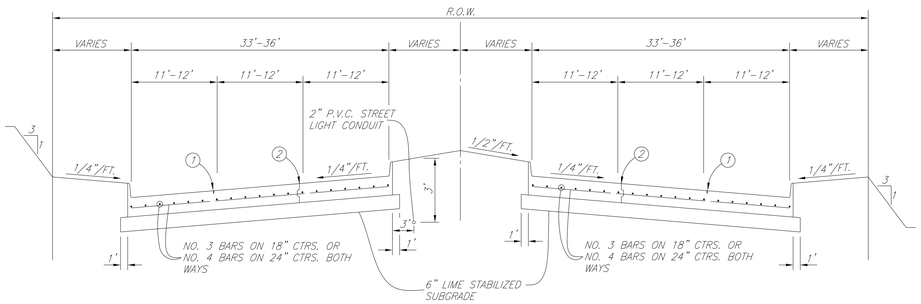

REGULAR SECTION

M6D & P6D

(REG_SECT)

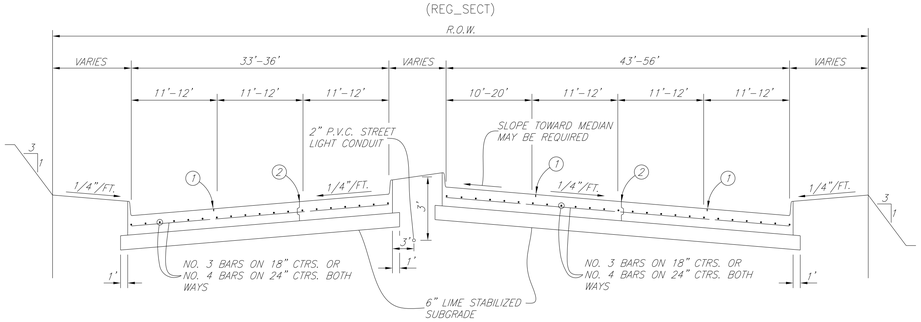

LEFT TURN SECTION

(LTURN_SECT)

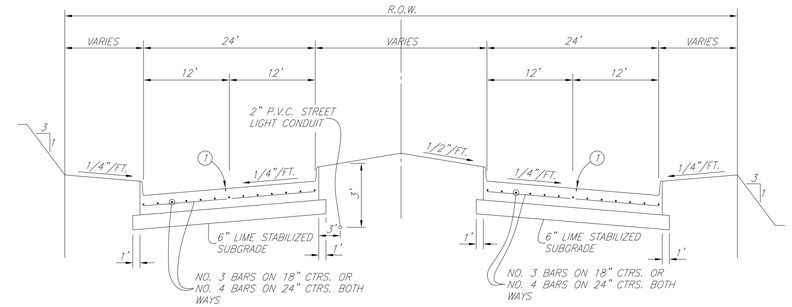

REGULAR SECTION

M4D

(REG_SECT2)

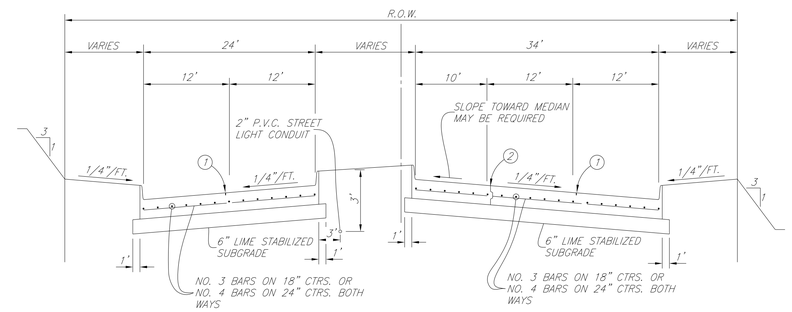

LEFT TURN SECTION

NOTE:
FOR RETROFIT TURN LANES AND MEDIAN OPENINGS. TWO ADDITIONAL INCHES OF CONCRETE CAN BE PLACED IN LIEU OF LIME STABILIZATION.

(LTURN_SECT2)

M60, P60, M4D SECTIONS SHALL HAVE MINIMUM PAVEMENT THICKNESS OF 8 INCHES.

LIME STABILIZED SUBGRADE – THE RATE OF HYDRATED LIME SHALL BE 7 1/2% BY UNIT DRY WEIGHT OR THAT PERCENT TO REDUCE THE SOIL P.I. TO LESS THAN 15. CONTRACTOR TO PROVIDE CITY WITH LIME SERIES TEST TO DETERMINE THE OPTIMUM LIME CONTENT.

LEGEND

(1) – SAWED LONGITUDINAL DUMMY JOINT

A. CONSTRUCTION JOINT (FULL WIDTH PVMT. IS ALLOWED WHERE APPROVED BY CITY).

(2) – B. DELETE IT WHEN PAVING IS 25 FT. WIDTH TO BE WIDENED IN FUTURE.

C. INSTALL CURB IF PAVING IS LESS THAN FULL WIDTH OF 33'-36'.

(LEGNED_PVMT)

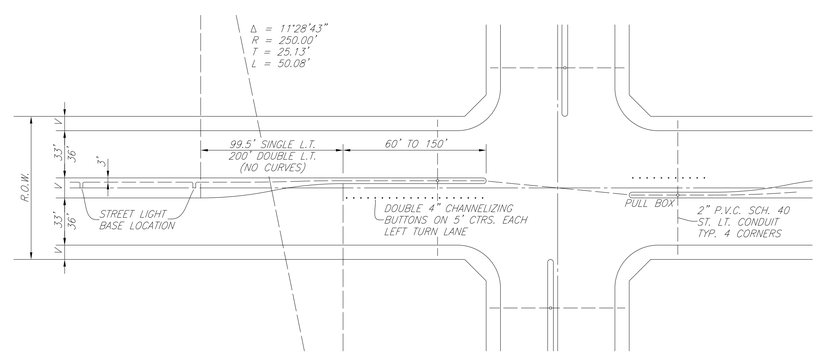

LEFT TURN PLAN

(PVMT-PLAN)

08-02

CITY OF CELINA, TEXAS

PAVING
STANDARD DETAILS

I:/proj/01390501/01390552-CCW&WW-EXT/dgn/ccw-ww-de102.dgn

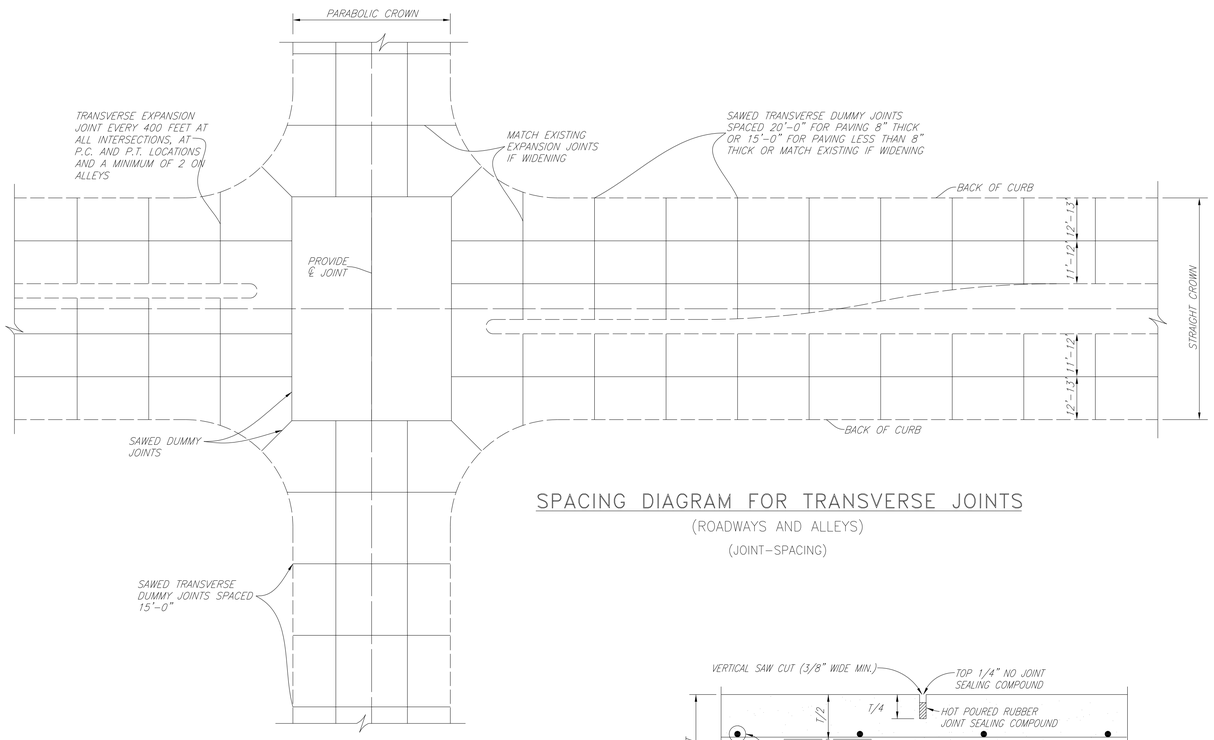

SPACING DIAGRAM FOR TRANSVERSE JOINTS

(ROADWAYS AND ALLEYS)

(JOINT-SPACING)

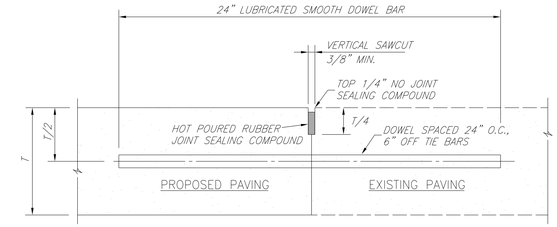

NOTE:

1. T-8" AND GREATER NO. 6 BAR, T-6" AND LESS NO. 5 BAR
2. LONGITUDINAL BUTT CONSTRUCTION MAY BE UTILIZED IN PLACE OF LONGITUDINAL HINGED (KEYWAY) JOINT AT CONTRACTORS OPTION.
3. DOWEL BARS SHALL BE DRILLED INTO PAVEMENT HORIZONTALLY BY USE OF A MECHANICAL RIG. HAND DRILLING NOT ACCEPTABLE. DAMAGE TO EXISTING PAVEMENT SHALL BE REMOVED BY CONTRACTOR AND JOINT CONSTRUCTED AT CONTRACTORS EXPENSE.
4. DOWEL BAR SHOWN IS IN ADDITION TO TIE BARS (12" O.C.-6" OFF DOWELS).
5. TIE BARS SHALL BE NO. 5 BAR DEFORMED. TIE BAR SHALL HAVE A LENGTH OF 24 INCHES.

LONGITUDINAL BUTT JOINT

(BUTTJNT)

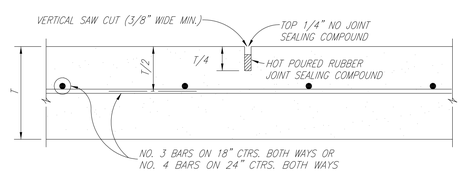

TRANSVERSE JOINTS SPACED 15 FT. C.-C. (MAX.)
LONGITUDINAL JOINTS SPACED 20 FT. C.-C. (MAX.)

SAWED DUMMY JOINT

(DUMMYJNT)

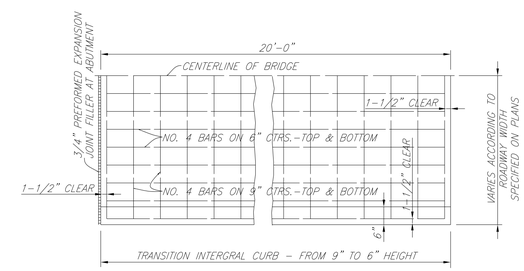

PLAN

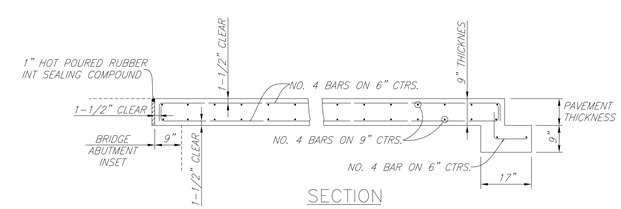

SECTION

BRIDGE APPROACH SLAB

(APPROACHSLAB)

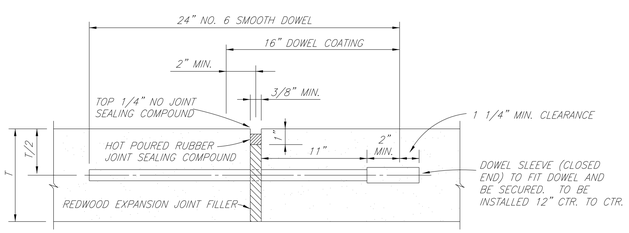

TRANSVERSE EXPANSION JOINT NOTES:

1. DOWELS AND REINFORCING BARS SHALL BE SUPPORTED BY AN APPROVED DEVICE.
2. TRANSVERSE EXPANSION JOINTS SHALL BE SPACED AT 400 FT. MAXIMUM AND AT ALL INTERSECTIONS.

TRANSVERSE EXPANSION JOINT

(EXPJNT)

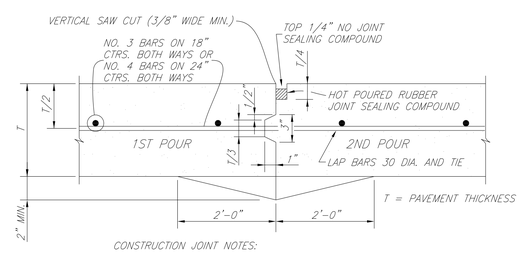

CONSTRUCTION JOINT NOTES:

1. CONTRACTOR SHALL PROTECT KEYWAY PRIOR TO SECOND POUR. IF LONGITUDINAL KEYWAY IS DAMAGED, CONTRACTOR SHALL REPAIR WITH THE USE OF LONGITUDINAL BUTT JOINT (DRILL DOWELS INTO FIRST POUR).
2. THICKENED EDGES ARE REQUIRED FOR FUTURE WIDENING ONLY.

CONSTRUCTION JOINT

(CONSTJNT)

08-03

CITY OF CELINA, TEXAS

PAVING
STANDARD DETAILS

i:/proj/0139050l/0139052-CCW&WW-EXT/dgn/ccw-ww-det03.dgn

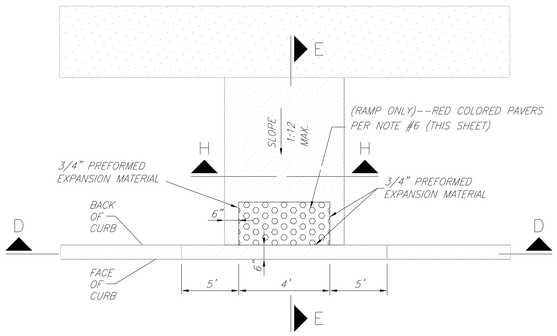

BARRIER FREE RAMP @ STRAIGHT CURB

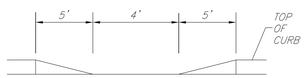

SECTION D–D

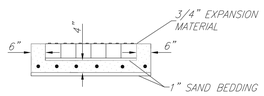

SECTION H–H

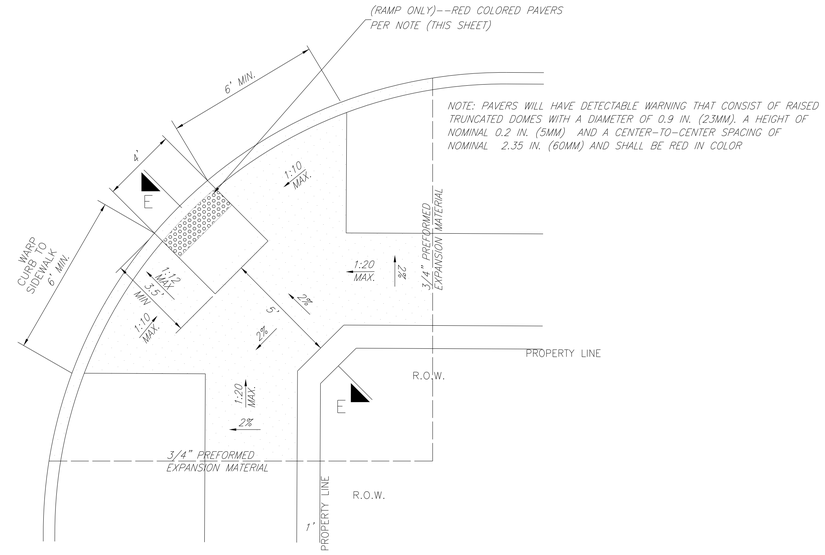

BARRIER FREE RAMP
STREET INTERSECTION
PLAN VIEW
NTS

GENERAL NOTES:

1. BARRIER FREE RAMPS SHALL BE CONSTRUCTED AS EXTENSIONS OF STANDARD CONCRETE SIDEWALKS EXCEPT AS NOTED IN THESE DETAILS.
2. MAXIMUM SLOPE ON BARRIER FREE RAMPS SHALL NOT EXCEED 1" PER FOOT AT ANY LOCATION.
3. DESIGNS SHOWN ARE FOR 6" CURBS. FOR CURBS WITH HEIGHT GREATER THAN 6", DIMENSIONS SHALL BE INCREASED PROPORTIONATELY.
4. STREETS ON STEEP GRADE WILL REQUIRE LONGER TRANSITIONS ON UPGRADE SIDE.
5. LOCATION OF BARRIER FREE RAMP MAY BE SHIFTED TO CLEAR OBSTRUCTIONS WITH THE APPROVAL OF THE CITY ENGINEER.
6. ACCESS RAMP FROM STREET GRADE SHALL HAVE DETECTABLE WARNING GROVES THAT SHALL BE 1/4" TO 3/4" WIDE, 1/8" DEEP, SPACED 2" APART.
7. ALL LANDINGS ARE TO BE 5'X5' AREAS WITH 2% (MAX) SLOPES IN ANY DIRECTION

RAMP WITH DOMES

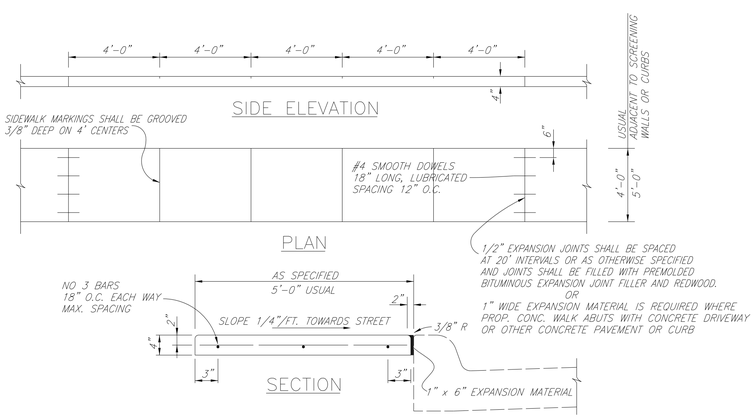

REINFORCED CONCRETE SIDEWALK

(SIDEWALK)

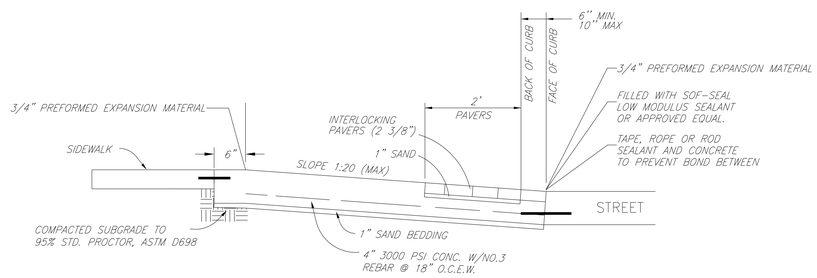

SECTION E–E

(BARRIER_FREE)

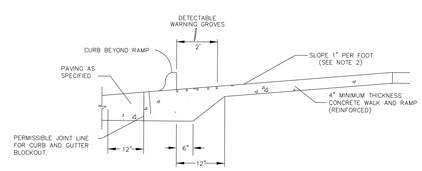

BARRIER FREE RAMP
TYPICAL SECTION THRU RESIDENTIAL RAMP
NTS

08-04

CITY OF CELINA, TEXAS

PAVING
STANDARD DETAILS

i:/proj/0139050I/0139052-CCW&WW-EXT/dgn/ccw-ww-det04.dgn

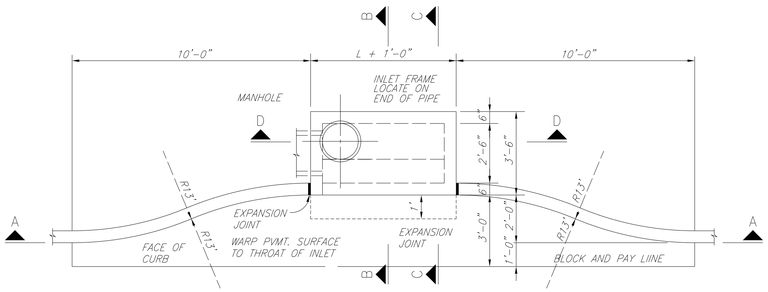

PLAN – RECESSED INLET

(REC–INT1)

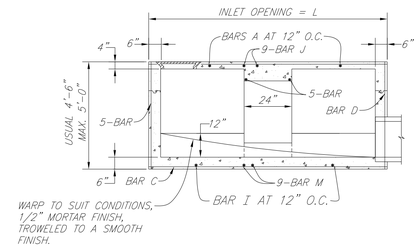

SECTION A–A – STANDARD AND RECESSED INLETS

(SECT_A–A1)

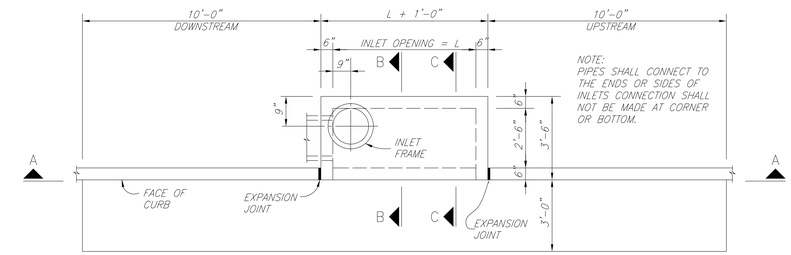

PLAN – STANDARD INLET

4, 6, 8 AND 10 FOOT INLETS

(STDINLT1)

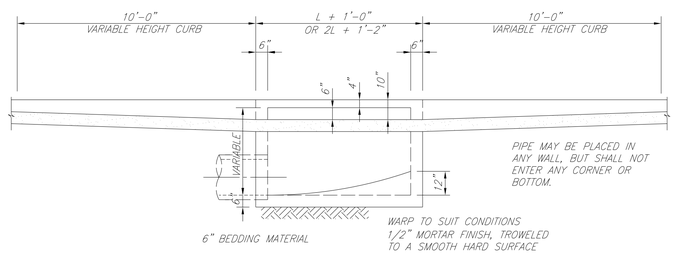

SECTION A–A–RECESSED AND STANDARD INLETS

4, 6, 8, AND 10 FOOT INLETS

(PLAN–10)

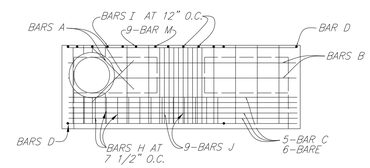

PLAN – STANDARD INLET

(PLAN_STDINL)

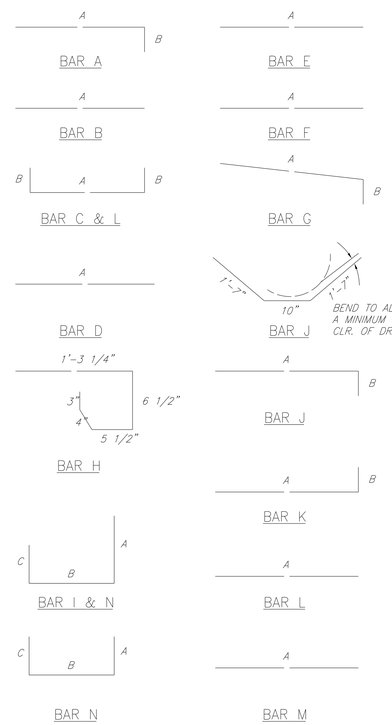

BAR DIAGRAMS

(BARDIAG)

REINFORCING STEEL SCHEDULE

DIMENSIONS SHOWN ARE FOR MAXIMUM SIZE INLETS

INLET LENGTH	BAR TYPE	BAR DIA. (1/8 IN.)	NO. REQ'D	BAR DIMENSIONS		
				A	B	C
4	A	3	6	3'–2"	0'–3"	–
	B	3	1	2'–10"	–	–
	C	4	15	4'–8"	0'–6"	–
	D	4	5	4'–8"	–	–
	F	4	1	3'–2"	–	–
	G	3	5	2'–0"	1'–3"	–
	H	3	6	*	*	*
	N	3	3	3'–2"	3'–2"	3'–2"
6	A	3	9	3'–2"	0'–3"	–
	B	3	1	4'–10"	–	–
	C	4	15	6'–8"	0'–6"	–
	D	4	5	4'–8"	–	–
	F	4	1	3'–2"	–	–
	G	3	5	2'–0"	1'–3"	–
	H	3	9	*	*	*
	N	3	3	3'–2"	3'–2"	3'–2"
8	A	3	12	3'–2"	0'–3'	–
	B	4	1	6'–10"	–	–
	C	4	15	8'–8"	0'–6"	–
	D	4	5	4'–8"	–	–
	F	4	1	3'–2"	–	–
	G	3	5	2'–0'	1'–3"	–
	H	3	12	*	*	*
	N	3	3	3'–2"	3'–2"	3'–2"
10	A	3	13	3'–2"	0'–3'	–
	B	3	2	8'–10"	–	–
	C	4	16	10'–8"	0'–6"	–
	D	4	4	4'–8"	–	–
	E	5	6	10'–8"	–	–
	G	3	5	2'–0"	1'–3"	–
	H	3	14	*	*	*
	I	4	8	4'–8"	3'–2"	3'–2"
	L	4	5	4'–3"	–	–

* SEE DIAGRAM FOR DIMENSIONS. 4', 6', 8' AND 10' INLETS

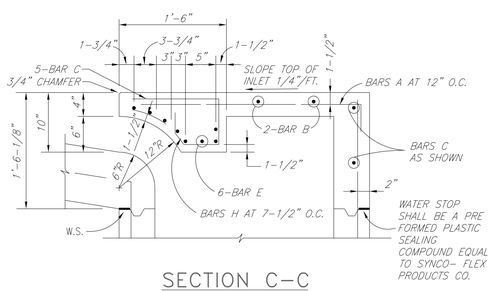

SECTION C–C

(SECT_C–C)

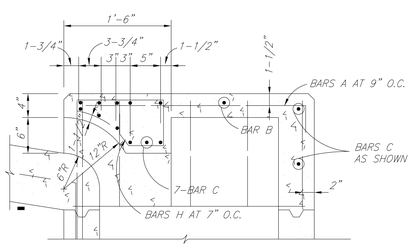

NOTE: FOR ADDITIONAL ADDITIONAL SEE SECTION C–C

SECTION E–E

(SECT_E–E)

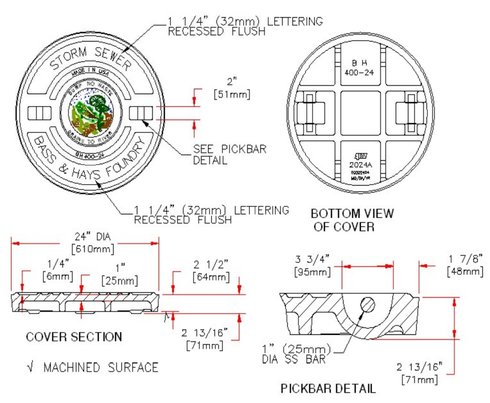

BH and Bass & Hays are registered trademarks of Bass & Hays Foundry, Inc.

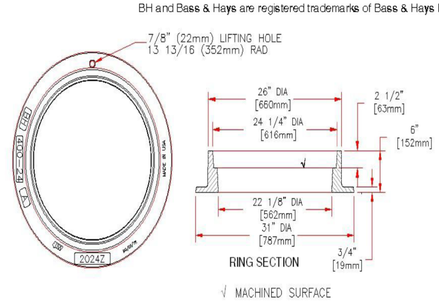

NOTES:

THE FLOOR OF THE EXCAVATION FOR INLET BOX MUST PROVIDE A FIRM, LEVEL BED FOR THE BASE SECTION TO REST UPON.

A MINIMUM OF 6 INCHES OF 1" DIAMETER (MAXIMUM) ROCK OR GRAVEL SHALL BE USED TO PREPARE THE BEDDING TO FINAL GRADE OR LIEU OF THIS, AT LEAST 6 INCHES OF 2–SACK CEMENT STABILIZED SAND SHALL BE USED TO PREPARE THE BEDDING TO GRADE. CEMENT STABILIZED–SAND SHALL BE ALLOWED TO SET BY KEEPING HOLE PUMPED DRY.

AFTER CASING HAS BEEN INSTALLED ON THE PROPER BEDDING, THE BACKFILL MATERIAL, WHICH IS FREE FLOWING AND CLEAR OF ROCKS, IN EXCESS OF 4" DIAMETER AND OTHER LUMPS WHICH WOULD PROHIBIT PROPER COMPACTION, SHALL BE COMMENCED IN LIFTS OF NO MORE THAN 18". THE MATERIAL USED FOR BACKFILL SHOULD BE A TYPE SUITABLE TO OBTAIN THE DENSITY REQUIREMENTS FOR THE SPECIFIC JOB.

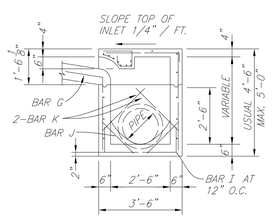

SECTION B–B

(SECT_B–B)

08-05

CITY OF CELINA, TEXAS

DRAINAGE
STANDARD DETAILS

i:/proj/0139050/0139052-CCW&WW-EXT/dgn/ccw-ww-det05.dgn

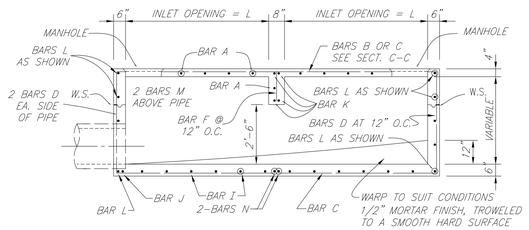

SECTION A–A

12, 14, 16 AND 20 FOOT INLETS

(SECT_A–A)

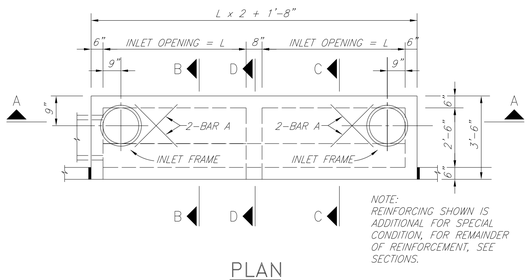

PLAN

20 FOOT INLETS

(PLAN_20)

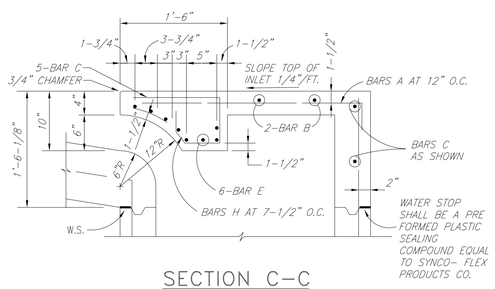

SECTION C–C

(SECT_C–C)

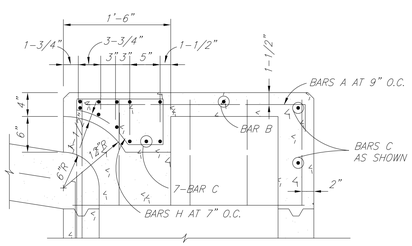

NOTE: FOR ADDITIONAL INFORMATION SEE SECTION C–C

SECTION D–D

(SECT_D–D)

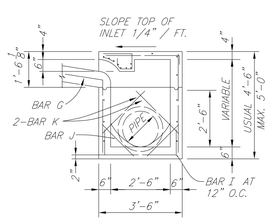

SECTION B–B

(SECT_B–B)

DOUBLE INLETS

DIMENSIONS SHOWN ARE FOR MAXIMUM SIZE INLETS

INLET LENGTH	BAR TYPE	BAR DIA. (1/8 IN.)	NO. REQ'D	BAR DIMENSIONS		
				A	B	C
6 FT.	A	3	15	3'-2"	0'-6"	–
	B	3	2	11'-6"	–	–
	C	4	16	13-4"	0'-6"	–
	D	4	9	4'-8"	–	–
	E	5	6	13-4"	–	–
	F	4	5	1'-2"	–	–
	G	3	12	2'-0"	1'-3"	–
	H	3	26	*	*	*
	I	4	12	4'-8"	3'-2"	3'-2"
	J	5	1	*	*	*
	K	5	6	3'-2"	0'-6"	–
	L	4	11	3'-2"	0'-6"	–
	M	4	2	3'-0" **	–	–
	N	4	2	4'-8"	3'-2"	4'-8"
7 FT.	A	3	17	3'-2"	0'-6"	–
	B	3	2	13'-6"	–	–
	C	4	16	15'-4"	0'-3'	–
	D	4	9	4'-8"	–	–
	E	5	6	15'-4"	–	–
	F	4	5	1'-2"	–	–
	G	3	15	2'-0"	1'-3"	–
	H	3	32	*	*	*
	I	4	14	4'-8"	3'-2"	3'-2"
	J	5	1	*	*	*
	K	5	6	3'-2"	0'-6"	–
	L	4	11	3'-2"	0'-6"	–
	M	4	2	3'-0" **	–	–
	N	4	2	4'-8"	3'-2"	4'-8"
8 FT.	A	3	19	3'-2"	0'-6"	–
	B	3	2	15'-6"	–	–
	C	4	16	17'-4"	0'-6"	–
	D	4	9	4'-8"	–	–
	E	5	6	17'-4"	–	–
	F	4	5	1'-2"	–	–
	G	3	12	2'-0"	1'-3"	–
	H	3	26	*	*	*
	I	4	16	4'-8"	3'-2"	3'-2"
	J	5	1	*	*	*
	K	5	6	3'-2"	0'-6"	–
	L	4	11	3'-2"	0'-6"	–
	M	4	2	3'-0" **	–	–
	N	4	2	4'-8"	3'-2"	4'-8"
10 FT.	A	3	23	3'-2"	0'-6"	–
	B	3	2	19'-6"	–	–
	C	4	16	21'-4"	0'-6"	–
	D	4	9	4'-8"	–	–
	E	5	6	21'-4"	–	–
	F	4	5	1'-2"	–	–
	G	3	15	2'-0"	1'-3"	–
	H	3	32	*	*	*
	I	4	20	4'-8"	3'-2"	3'-2"
	J	5	1	*	*	*
	K	5	6	3'-2"	0'-6"	–
	L	4	11	3'-2"	0'-6"	–
	M	4	2	3'-0" **	–	–
	N	4	2	4'-8"	3'-2"	4'-8"

* SEE DIAGRAM FOR DIMENSIONS.
** FIELD CUT AS REQUIRED TO ACCOMMODATE DRAIN PIPE 16' AND 20' INLETS

REINFORCING STEEL SCHEDULE

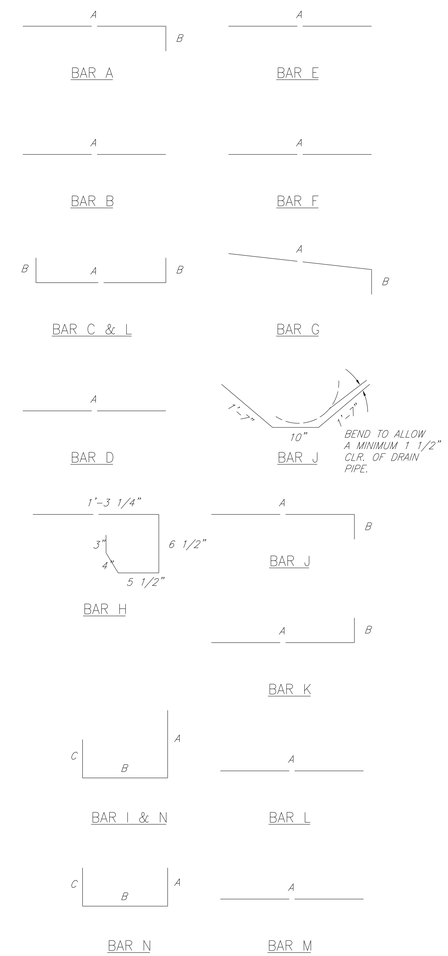

△ BEND TO ALLOW A MINIMUM 1 1/2" CIR. OF DRAIN PIPE
* SEE DIAGRAMS FOR DIMENSIONS
** FIELD CUT AS REQUIRED TO ACCOMODATE DRAIN PIPE

BAR BENDING DIAGRAMS

(BARLIST2)

08-06

CITY OF CELINA, TEXAS

DRAINAGE
STANDARD DETAILS

i:/proj/0139050i/0139055z-CCW&WW-EXT/dgn/ccw-ww-det06.dgn

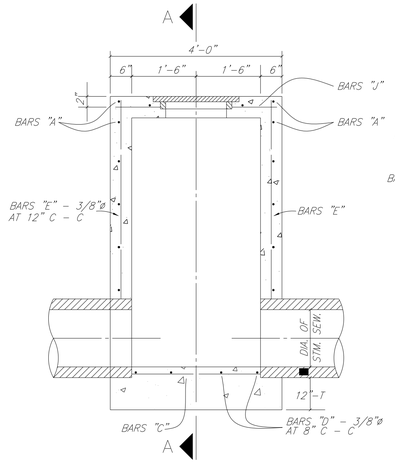

ELEVATION

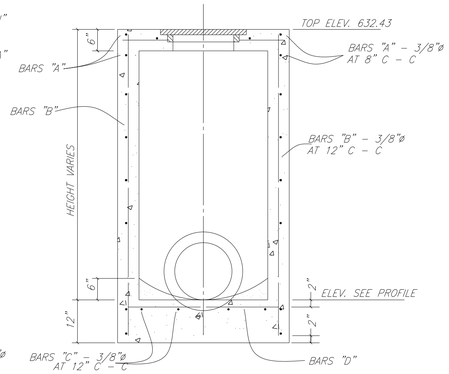

SECTION A–A

STORM SEWER TYPE A MANHOLE

MAX. PIPE SIZE 30"

(TYPEAMH)

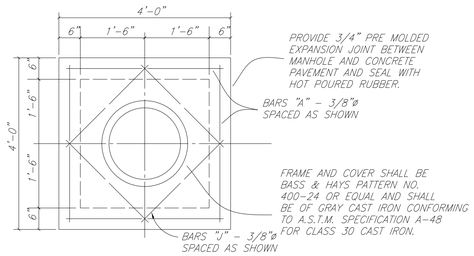

TOP PLAN
TYPE A & TYPE B
STORM SEWER MANHOLE

(MH_TOP)

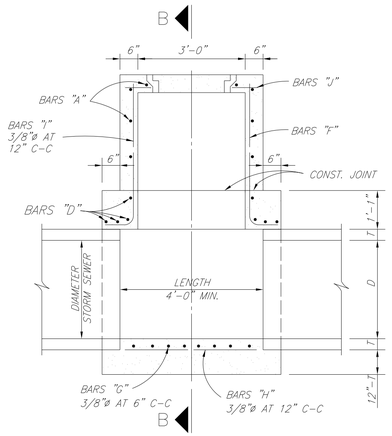

ELEVATION

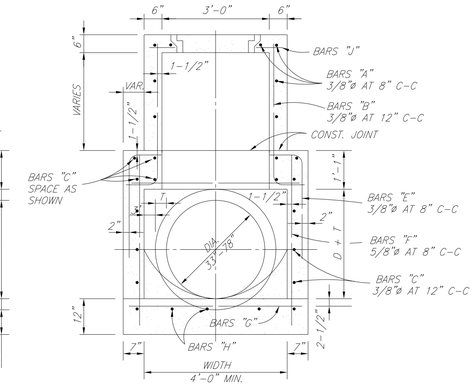

SECTION B–B

TYPE B STORM SEWER MANHOLE

MAX. PIPE SIZE 78"

(TYPEBMH)

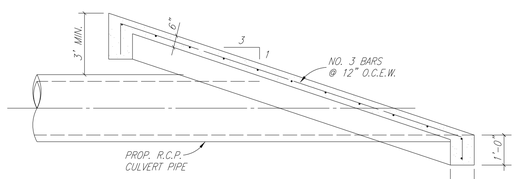

SECTION A–A

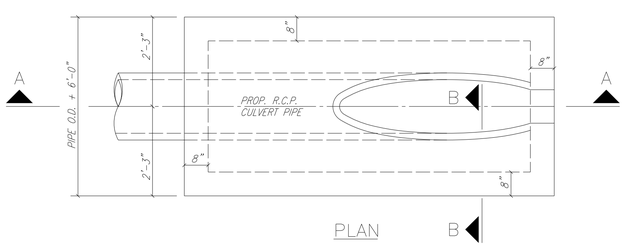

PLAN

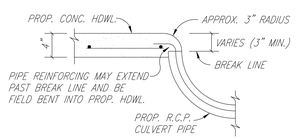

SECTION B–B

SLOPED CONCRETE HEADWALL

(SLOPEHWL)

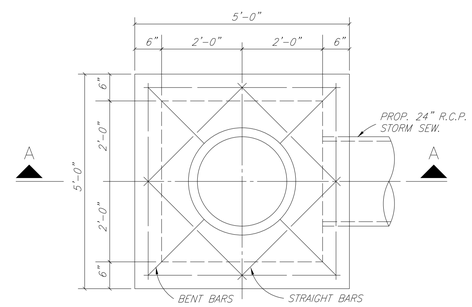

PLAN

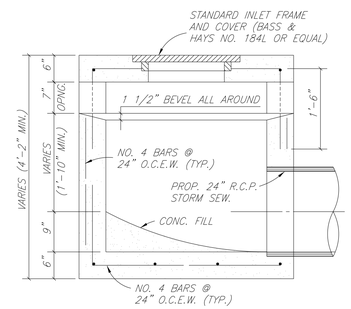

SECTION A–A

STANDARD DROP INLET

(DROPINLET)

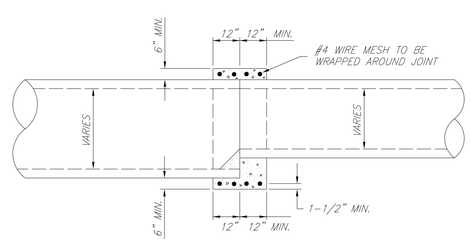

DETAIL OF CONCRETE COLLAR FOR R.C.P. OR R.C.A.P. CONNECTIONS

INSIDE JOINT SHALL BE CONCRETE MORTAR

(CONCCOL)

08-07

CITY OF CELINA, TEXAS

DRAINAGE
STANDARD DETAILS

i:/proj/0139050l/0139055z-CCW&WW-EXT/dgn/ccw-ww-de107.dgn

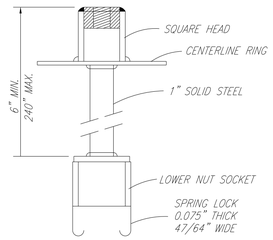

SPRING LOCK VALVE EXTENSION

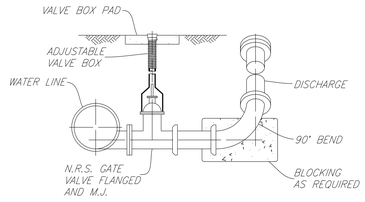

BLOW OFF VALVE

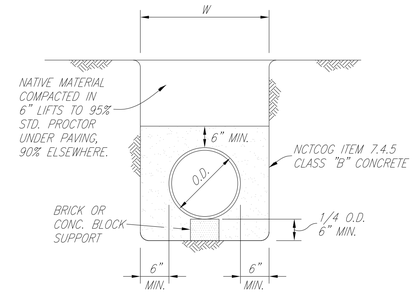

CLASS G EMBEDMENT

CONCRETE ENCASEMENT

NO SCALE

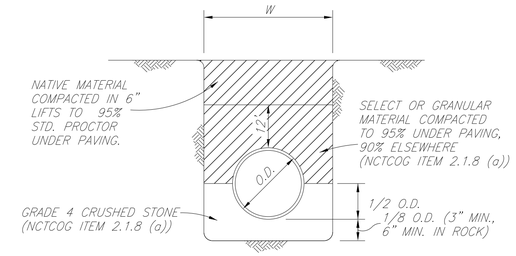

CLASS B+ EMBEDMENT

STD PVC WATER

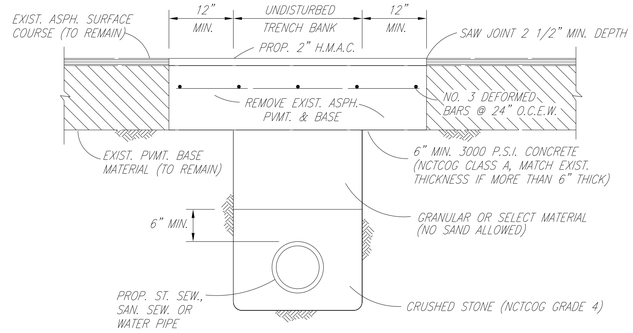

ASPHALT STREET REPAIR

NO SCALE

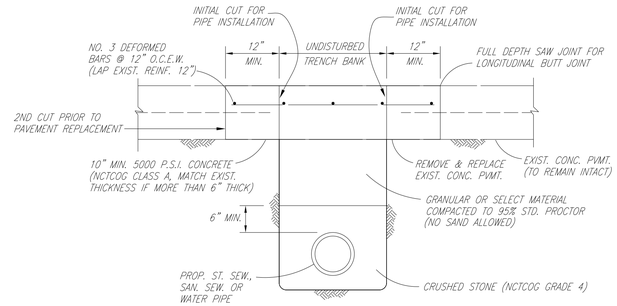

CONCRETE STREET REPAIR

NO SCALE

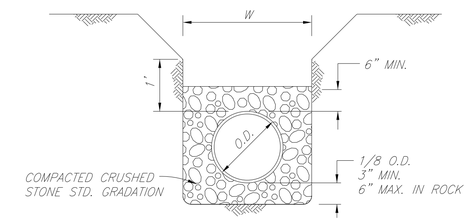

CLASS H EMBEDMENT

P.V.C. PIPE ONLY

STD. P.V.C. SEWER INSTALLATION

STD. P.V.C., R.C.C.P. & DUCTILE WATER INSTALLATION

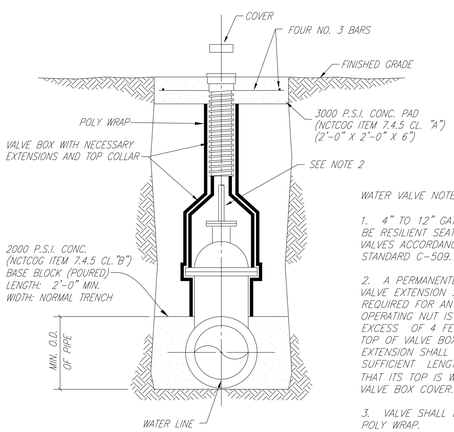

WATER VALVE NOTES:

1. 4" TO 12" GATE VALVE SHALL BE RESILIENT SEATED WEDGE GATE VALVES ACCORDANCE WITH AWWA STANDARD C-509.

2. A PERMANENTLY ATTACHED VALVE EXTENSION STEM SHALL BE REQUIRED FOR ANY VALVE WHOSE OPERATING NUT IS LOCATED IN EXCESS OF 4 FEET BELOW THE TOP OF VALVE BOX. THIS EXTENSION SHALL BE OF SUFFICIENT LENGTH TO INSURE THAT ITS TOP IS WITHIN 4" OF THE VALVE BOX COVER.

3. VALVE SHALL BE WRAPPED IN POLY WRAP.

VALVE SETTING & BOX

NO SCALE

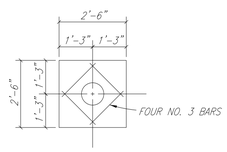

VALVE BOX PAD PLAN

NO SCALE

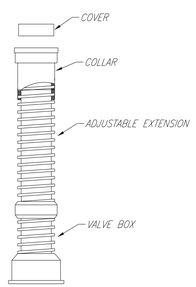

VALVE BOX WITH EXTENSION

NO SCALE

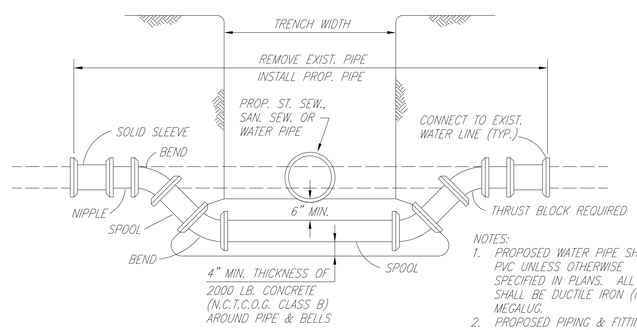

NOTES:

1. PROPOSED WATER PIPE SHALL BE PVC UNLESS OTHERWISE SPECIFIED IN PLANS. ALL FITTINGS SHALL BE DUCTILE IRON (M.J.-P.E.) MEGALUG.
2. PROPOSED PIPING & FITTINGS ARE SYMMETRIC ABOUT CENTER OF PROP. SAN. SEW. OR ST. SEW. PIPE AND SHALL RETAIN TEST PRESSURES.
3. ALL THRUST BLOCKING SHALL BE SUBSIDIARY TO UNIT PRICE.
4. CROSSING OF SANITARY SEWER SHALL BE IN ACCORDANCE WITH T.N.R.C.C. REQUIREMENTS. (CHAPTER 317.13 APPENDIX E)

WATER MAIN LOWERING

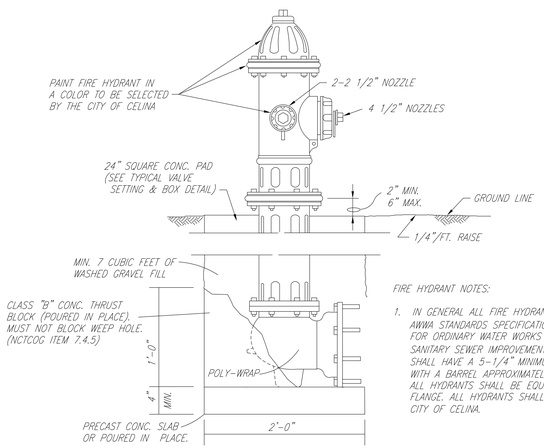

FIRE HYDRANT NOTES:

1. IN GENERAL ALL FIRE HYDRANTS SHALL CONFORM TO AWWA STANDARDS SPECIFICATIONS FOR FIRE HYDRANTS FOR ORDINARY WATER WORKS SERVICE FOR WATER AND SANITARY SEWER IMPROVEMENTS. FIRE HYDRANTS SHALL HAVE A 5-1/4" MINIMUM VALVE OPENING AND WITH A BARREL APPROXIMATELY 7" INSIDE DIAMETER. ALL HYDRANTS SHALL BE EQUIPPED WITH A BREAKAWAY FLANGE. ALL HYDRANTS SHALL BE APPROVED BY THE CITY OF CELINA.

TYPICAL FIRE HYDRANT INSTALLATION

NO SCALE

08-08

CITY OF CELINA, TEXAS

WATER DISTRIBUTION SYSTEM
STANDARD DETAILS

i:/proj/0139050I/0139052-CCW&WW-EXT/dgn/ccw-ww-det09.dgn

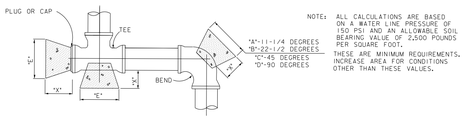

NOTE: ALL CALCULATIONS ARE BASED ON A WATER LINE PRESSURE OF 150 PSI AND AN ALLOWABLE SOIL BEARING VALUE OF 2,500 POUNDS PER SQUARE FOOT.

THESE ARE MINIMUM REQUIREMENTS. INCREASE AREA FOR CONDITIONS OTHER THAN THESE VALUES.

HORIZONTAL BLOCKING TABLE

PIPE SIZE	"X" DIM. IN FT.	11-1/4 DEGREES		22-1/2 DEGREES		45 DEGREES		90 DEGREES		TEE & PLUG	
		"A"	MIN. AREA	"B"	MIN. AREA	"C"	MIN. AREA	"D"	MIN. AREA	"E"	MIN. AREA
4"	1.5	1.00	1.00	1.00	1.00	1.00	1.00	1.00	1.06	1.00	1.00
6"	1.5	1.00	1.00	1.00	1.00	1.14	1.30	1.55	2.40	1.30	1.70
8"	1.5	1.00	1.00	1.08	1.18	1.52	2.31	2.07	4.27	1.74	3.02
10"	1.5	1.00	1.00	1.35	1.84	1.90	3.61	2.58	6.66	2.17	4.71
12"	1.5	1.00	1.33	1.63	2.65	1.86	5.19	3.10	9.60	2.61	6.79
14"	1.5	1.03	1.81	1.90	3.60	2.66	7.07	3.61	13.06	3.04	9.24
16"	2.0	1.18	2.36	2.17	4.71	3.04	9.23	4.13	17.06	3.47	12.06
18"	2.0	1.33	2.99	2.44	5.96	3.42	11.69	4.65	21.59	3.91	15.27
20"	2.0	1.48	3.70	2.71	7.35	3.80	14.43	5.16	26.66	4.34	18.85
21"	2.0	1.55	4.07	2.85	8.11	3.99	15.91	5.42	29.39	4.56	20.78
24"	2.0	1.77	5.32	3.25	10.59	4.56	20.77	6.20	38.39	5.21	27.14
27"	2.5	1.99	6.73	3.66	13.40	5.13	26.29	6.97	48.58	5.86	34.35
30"	2.5	2.22	8.31	4.07	16.55	5.70	32.46	7.74	59.98	6.51	42.41
33"	2.5	2.44	10.06	4.47	20.02	6.27	39.28	8.52	72.57	7.16	51.31
36"	2.5	2.66	11.97	4.88	23.83	6.84	46.74	9.29	86.37	7.81	61.07
39"	3.0	2.88	14.05	5.29	27.97	7.41	54.86	10.07	101.36	8.47	71.68
42"	3.0	3.10	16.30	5.69	32.43	7.98	63.62	10.85	117.56	9.12	83.13

NOTE: CLASS "B" CONCRETE 2,000 PSI SHALL BE USED FOR ALL BLOCKING UNLESS OTHERWISE NOTED ON STANDARD DETAILS AND / OR PLANS.

THE MINIMUM VERTICAL DIMENSION OF ALL BLOCKING SHALL BE 1.5 TIMES THE PIPE DIAMETER WITH AT LEAST 0.75 TIMES THE PIPE DIAMETER EXTENDING BOTH ABOVE AND BELOW THE PIPE CENTERLINE. THIS DIMENSION DETERMINES THE "A" DIMENSION FOR 11-1/4° BENDS.

FOR 22-1/2°, 45°, 90°, AND TEES AND PLUGS, THE VERTICAL DIMENSION SHALL BE EQUAL TO THE HORIZONTAL DIMENSION SHOWN TO PRODUCE THE REQUIRED MINIMUM AREA.

ALL MINIMUM AREAS ARE IN SQUARE FEET.

BLOCKING TO BE AGAINST UNDISTURBED TRENCH WALLS AND BOTTOM.

HORIZONTAL THRUST BLOCKING DETAIL

NO SCALE

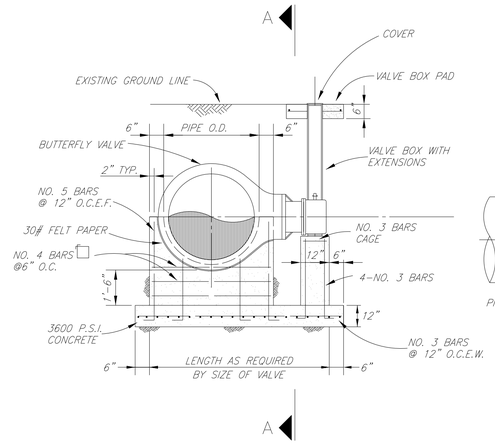

SECTION B–B

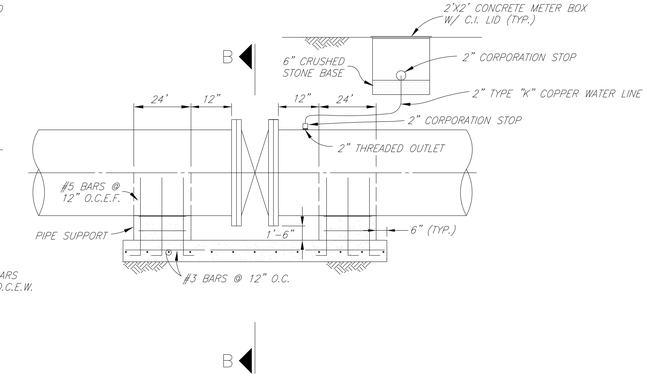

SECTION A–A

BUTTERFLY VALVE INSTALLATION

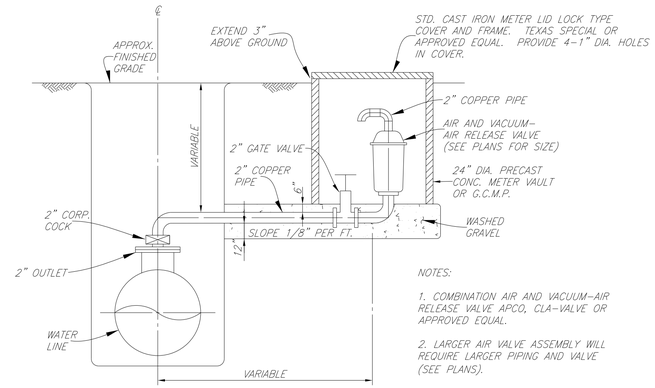

NOTES:

1. COMBINATION AIR AND VACUUM-AIR RELEASE VALVE APCO, CLA-VALVE OR APPROVED EQUAL.

2. LARGER AIR VALVE ASSEMBLY WILL REQUIRE LARGER PIPING AND VALVE (SEE PLANS).

AIR AND VACUUM – AIR RELEASE VALVE INSTALLATION

BORING NOTES:

1. 2 MORTAR BANDS FOR R.C.C.P. AND CEMENT LINED & COATED STEEL PIPE MAY BE USED IN LIEU OF SKIDS & STRAPS.
2. CONTRACTOR SHALL PROVIDE SUPPORT UNDER CARRIER PIPE TO HAVE MIN. 1" CLEARANCE BETWEEN PIPE BELL AND ENCASEMENT PIPE.
3. ENDS OF ENCASEMENT PIPE SHALL BE PLUGGED WITH BRICK AND MORTAR FOR ROADWAY CROSSINGS AND CLAY FOR RAILROAD CROSSINGS.

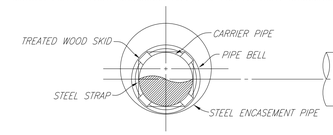

SECTION

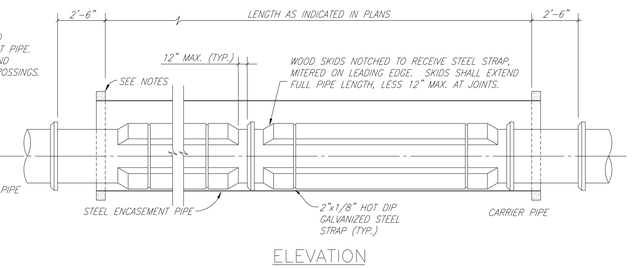

ELEVATION

ENCASED ROAD OR RAILROAD BORE

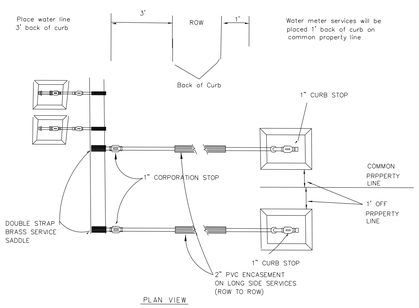

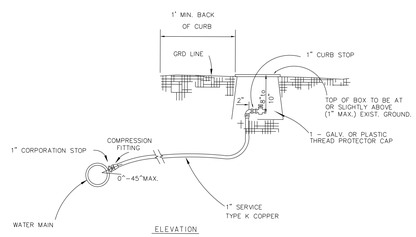

NOTES

1. WHERE TAPPING EXISTING MAINS OR PVC WATER MAINS, DOUBLE STRAPPED BRONZE, STAINLESS STEEL, OR EPOXY COATED DUCTILE IRON SADDLES SHALL BE USED.
2. COPPER SERVICES SHALL BE CONTINUOUS WITH NO JOINTS FROM CORP. STOP TO QUARTER BEND.
3. ALL COPPER FITTINGS SHALL BE COMPRESSION FITTINGS.
4. METERS SHALL NOT BE INSTALLED IN EXISTING OR PROPOSED SIDEWALK OR DRIVEWAYS.

SERVICE CONNECTION DETAIL

NO SCALE

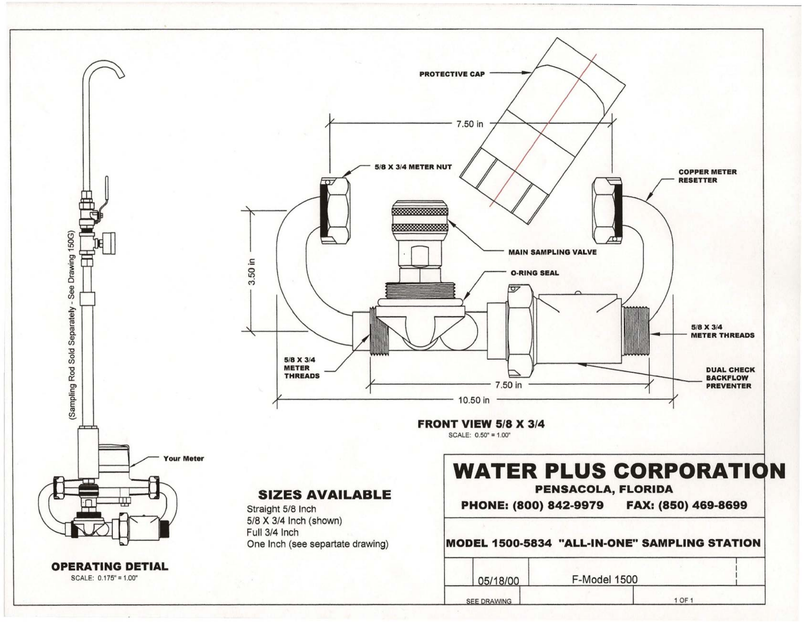

SIZES AVAILABLE
Straight 5/8 Inch
5/8 X 3/4 Inch (shown)
Full 3/4 Inch
One Inch (see separtate drawing)

WATER PLUS CORPORATION
PENSACOLA, FLORIDA
PHONE: (800) 842-9979 FAX: (850) 469-8699

MODEL 1500-5834 "ALL-IN-ONE" SAMPLING STATION

05/18/00 | F-Model 1500 | SEE DRAWING | 1 OF 1

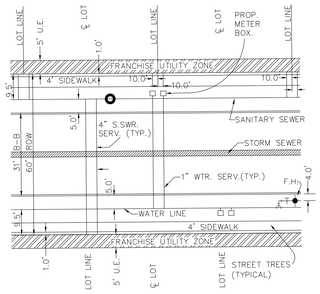

UTILITY PLACEMENT DETAIL

NO SCALE

08-09

CITY OF CELINA, TEXAS

WATER DISTRIBUTION SYSTEM
STANDARD DETAILS

i:/proj/0139050i/0139052-CCW&WW-EXT/dgn/ccw-ww-det10.dgn

DFW PLASTICS, INC.

PO Box 648
Bedford, Texas 76095
Tel: 817.439.3600
Fax: 817.439.3700
www.dfwplasticsinc.com

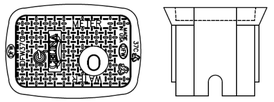

DFW37C-12-1SAF CELINA

21x14x12 Black Polymer Box w/
Black Polymer AMR/AMI Lid w/ Security Lock & Knockout

This product is designed to withstand loading in non-deliberate and incidental traffic. Not to be installed in roadway. Meter Box shall be black and constructed out of modified polyethylene material for maximum durability and corrosion resistance. The black material is for maximum UV protection. The black material shall be uniform throughout the Meter Box for maximum longevity and **not have** a foaming agent that creates air pockets within the plastic wall.

Vertical and Lateral Load Rating:

- Compliant with AASHTO, Design Load of H-10; ASTM C 857-12a, Design Load of A-8, 8,000 lbs. transferred through a 10" x 10" steel plate centered in the cover and body.
- Compliant with AASHTO, Design Load of H-20; ASTM C 857-12a, Design Load of A-16, 16,000 lbs. transferred through a 10" x 20" steel plate centered on the cover and body.
- This product is designed to withstand H-10 and H-20 loading in non-deliberate or incidental traffic areas. **NOT INTENDED TO BE INSTALLED IN ROADWAYS.**

Polymer Lid

- The polymer lid shall have a molded key hole and Security Lock underneath lid (DFW-SBLOCK-XL) - *as illustrated.*
- The polymer lid shall have one (1) **MOLDED knock out plug (1.88" x 2.50"), recessed (4 5/8" x 1/4") deep** - *as illustrated.*
- The polymer lid shall have a molded slide mount bracket for placement of AMR/AMI device - *as illustrated.*
- The polymer lid shall seat securely and evenly inside the Meter Box and shall not overlap the top edge of the Meter Box.
- The polymer lid shall have molded **tread-pattern** for skid resistance - **tread dimensions shall be 0.188" x 0.938" x 0.150" deep.**
- The polymer lid shall have "Water Meter" molded into the lid - **Font shall be Std Fadal CNC Font with 1" characters x 0.150" deep.**
- The polymer lid shall have "CELINA" molded into the lid - *as illustrated.*
- The polymer lid shall retrofit existing cast iron meter boxes with similar dimensions and be able to adjust in the field.
- The polymer lid shall be black and have a molded recycled emblem with a minimum of 50% Post Consumer Recycled and 50% Post Industrial/ Pre Consumer Recycled Content- Verified with a **Leed Product Documentation.**
- The polymer lid shall be DFW Plastics Inc, **MADE IN USA.** - Domestic Only.

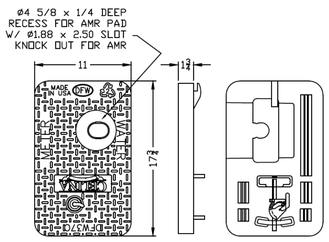

DFW37C-1SAF CELINA-LID

OPTIONAL SECURITY HARDWARE

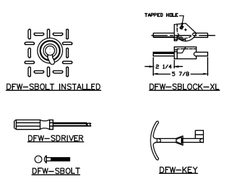

This product is designed to withstand loading in non-deliberate and incidental traffic. Not to be installed in roadway. Meter Box shall be black and constructed out of modified polyethylene material for maximum durability and corrosion resistance. The black material is for maximum UV protection. The black material shall be uniform throughout the Meter Box for maximum longevity and not have a foaming agent that creates air pockets within the plastic wall.

Vertical and Lateral Load Rating:

- Compliant with AASHTO, Design Load of H-10; ASTM C 857-12a, Design Load of A-8, 8,000 lbs. transferred through a 10" x 10" steel plate centered in the cover and body.
- Compliant with AASHTO, Design Load of H-20; ASTM C 857-12a, Design Load of A-16, 16,000 lbs. transferred through a 10" x 20" steel plate centered on the cover and body.
- This product is designed to withstand H-10 and H-20 loading in non-deliberate or incidental traffic areas. **NOT INTENDED TO BE INSTALLED IN ROADWAYS.**

Polymer Body

- The polymer body shall be BLACK and have a **Minimum** of 3/8" wall thickness - *as illustrated.*
- The polymer body shall have **Minimum** inside working room of (19 3/8" x 10 7/16") - *as illustrated.*
- The polymer body shall have crush resistant ribbing along the outside of the box.
- The polymer body shall have a flange around the lid opening to help prevent settling and aide in the adjustment to grade.
- The polymer body shall have one pipe slot molded on each end of the body that measures (3" x 4").
- The polymer body shall be black and have a molded recycled emblem with a minimum of 35% Post Industrial/ Pre Consumer Recycled Content - Verified with a **Leed Product Documentation.**
- The polymer Body shall be DFW Plastics Inc., **MADE IN USA.** - Domestic Only.

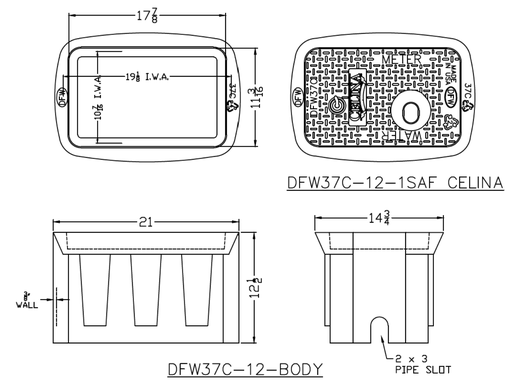

Meter Box shall be C Series by DFW Plastics, Inc. or an approved equal. All Specs are subject to change without notice.

Part No.	Series	Size	Height	Width	Length
DFW37C-12-BODY	37C	21" x 14"	12"	Top - 14-3/4"	Top- 21"
DFW37C-12-1SAF CELINA	37C	21" x 14"	12"	Base - 11-1/4"	Base- 21"
DFW37C-1SAF CELINA-LID	37C	21" x 14"	1-7/8"	11"	17-3/4"

Single Service Box for 5/8", 3/4", & 1" Meters
File: Submittal -DFW37C-12-1SAF CELINA
Rev. A July 2013

Submitted by:

REVISIONS		
REV	DESCRIPTION	DATE
NR	NEW RELEASE	07/09/13

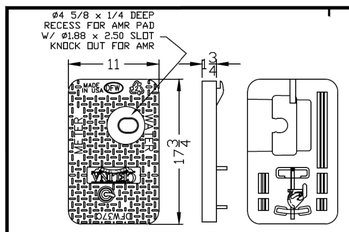

DFW37C-1SAF CELINA-LID

LID KEY	
1	BLACK COLOR
S	BRASS LOCK, SECURITY
A	AMR SLIDE MOUNT
F	KNOCKOUT
CELINA	CELINA ENGRAVING

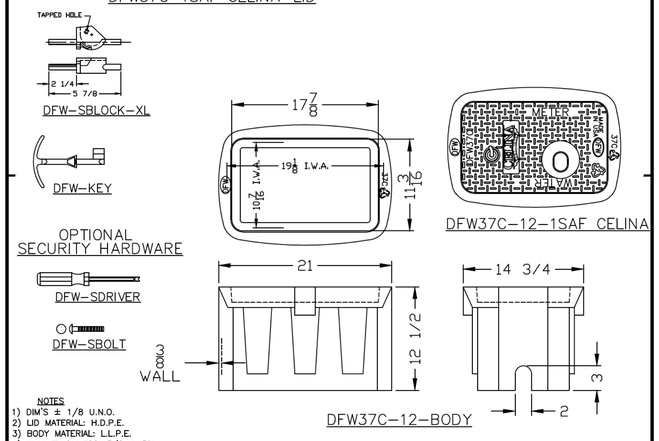

NOTES
1) DIM'S ± 1/8 U.N.O.
2) LID MATERIAL: H.D.P.E.
3) BODY MATERIAL: L.L.P.E.
4) WALL THICKNESS: 3/8 ± 5%
5) I.W.A. = INSIDE WORK AREA
6) SNAP LOCK POCKET WILL RECEIVE AMR/AMI DEVICE ENDPOINT. SNAP LOCK SLOT IS 1.80" ± .015" TO ALLOW FOR A FINGER FORCE INSTALL. POCKET HEIGHT IS 15/16 FOR MIN 1/8" AIR GAP.

DFW PLASTICS, INC. ENGAGES IN ONGOING RESEARCH AND DEVELOPMENT TO IMPROVE AND ENHANCE ITS PRODUCTS. THEREFORE, DFW PLASTICS, INC. RESERVES THE RIGHT TO CHANGE PRODUCT OR SYSTEM SPECIFICATIONS WITHOUT NOTICE.

DFW PLASTICS, INC.
PO BOX 648
BEDFORD, TEXAS 76095
(817) 439-3600
(817) 439-3700 (f)
www.dfwplasticsinc.com

CITY OF CELINA

DFW37C-12-1SAF CELINA

CREATED: 07/09/13
UPDATED: *
ACCEPTED: BMcK
DRAWN BY: J.C.A.
PLOT SCALE: 1:10

08-10

CITY OF CELINA, TEXAS

WATER DISTRIBUTION SYSTEM
STANDARD DETAILS

i:/proj/0139050I/0139052-CCW&WW-EXT/dgn/ccw-ww-detl.dgn

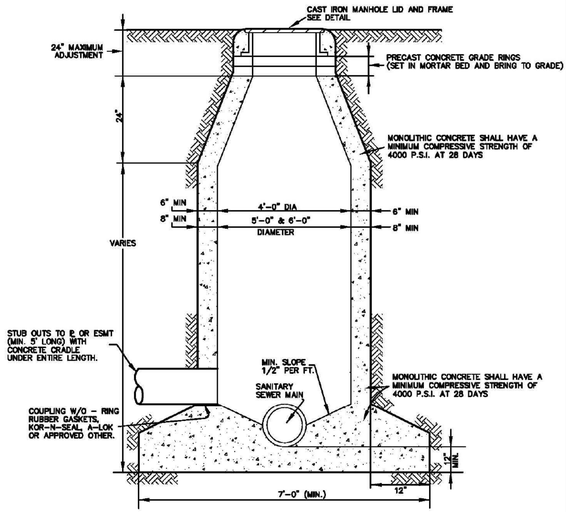

NOTES:
1. THE DIAMETER OF A MANHOLE CONSTRUCTED OVER THE CENTER OF A SEWER SHOULD VARY WITH THE SIZE OF THE SEWER. FOR EIGHT-INCH (8"), TEN-INCH (10"), AND TWELVE-INCH (12"), THE MANHOLE SHALL BE FOUR-FOOT (4') MINIMUM DIAMETER. FOR FIFTEEN-INCH (15"), EIGHTEEN-INCH (18"), TWENTY-ONE-INCH (21"), TWENTY-FOUR-INCH (24") AND TWENTY-SEVEN-INCH (27") SHALL BE FIVE-FOOT (5') MINIMUM DIAMETER; THIRTY-INCH (30") AND THIRTY-SIX-INCH (36") SHALL BE SIX-FOOT (6') MINIMUM DIAMETER. MANHOLES DEEPER THAN FIFTEEN FEET (15') SHALL BE A MINIMUM OF FIVE-FOOT (5') DIAMETER.

STANDARD
CAST IN PLACE MANHOLE
NTS

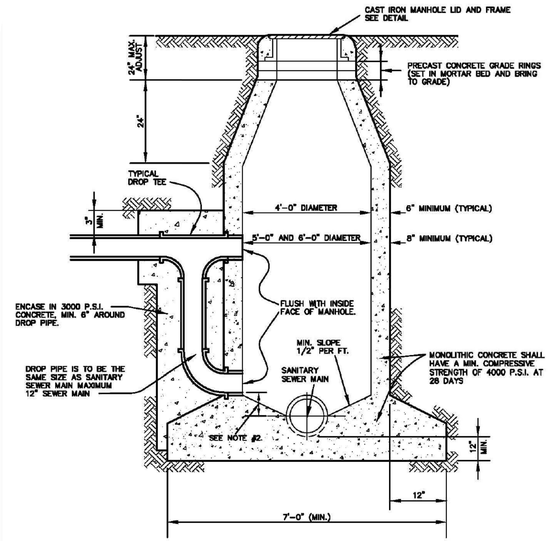

NOTES:
1. THE DIAMETER OF A MANHOLE CONSTRUCTED OVER THE CENTER OF A SEWER SHOULD VARY WITH THE SIZE OF THE SEWER. FOR EIGHT-INCH (8"), TEN-INCH (10"), AND TWELVE-INCH (12"), THE MANHOLE SHALL BE FOUR-FOOT (4') MINIMUM DIAMETER. FOR FIFTEEN-INCH (15"), EIGHTEEN-INCH (18"), TWENTY-ONE-INCH (21"), TWENTY-FOUR-INCH (24") AND TWENTY-SEVEN-INCH (27") SHALL BE FIVE-FOOT (5') MINIMUM DIAMETER; THIRTY-INCH (30") AND THIRTY-SIX-INCH (36") SHALL BE SIX-FOOT (6') MINIMUM DIAMETER. MANHOLES DEEPER THAN FIFTEEN FEET (15') SHALL BE A MINIMUM OF FIVE-FOOT (5') DIAMETER.

2. FLOWLINE OF DROP SHALL BE LOCATED BETWEEN THE CENTERLINE AND TOP OF SEWER MAIN.

MANHOLE
DROP CONNECTION
NTS

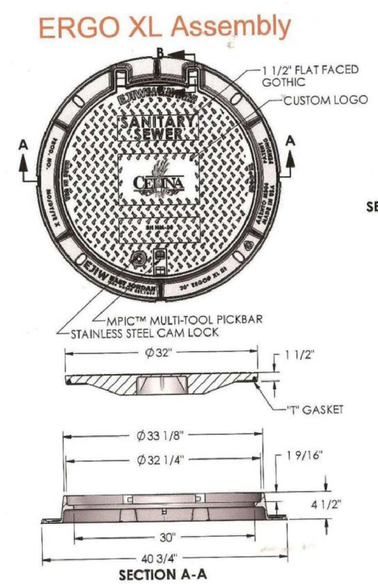

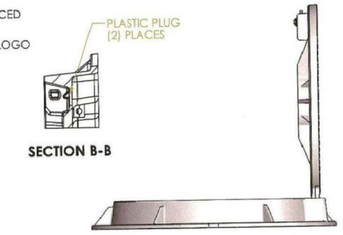

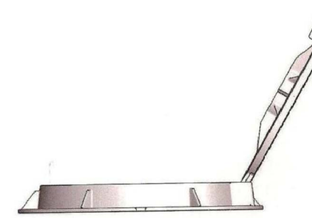

Product Number
00148038L01

Design Features
-Materials
Cover
Ductile Iron (80-55-06)
Frame
Ductile Iron (80-55-06)

-Design Load
Heavy Duty
-Open Area
n/a
-Coating
Undipped
-✓ Designates Machined Surface
-Slip Resistant Surface with the LLLL® registered trademark

Certification
-ASTM A536
-
-
-Country of Origin: USA

Major Components
LC00148038
LF300454075

Drawing Revision
6/18/2012 Designer: SDC
6/25/2012 Revised By: SDC

Disclaimer
Weights (lbs/kg), dimensions (inches/mm) and drawings provided for your guidance. We reserve the right to modify specifications without prior notice.

CONFIDENTIAL: This drawing is the property of EJ Group, Inc. and embodies confidential information, registered marks, patents, trade secret information, and/or know-how that is the property of EJ Group, Inc. Copyright © 2011 EJ Group, Inc. All rights reserved.

Contact
800.626.4653
ejco.com

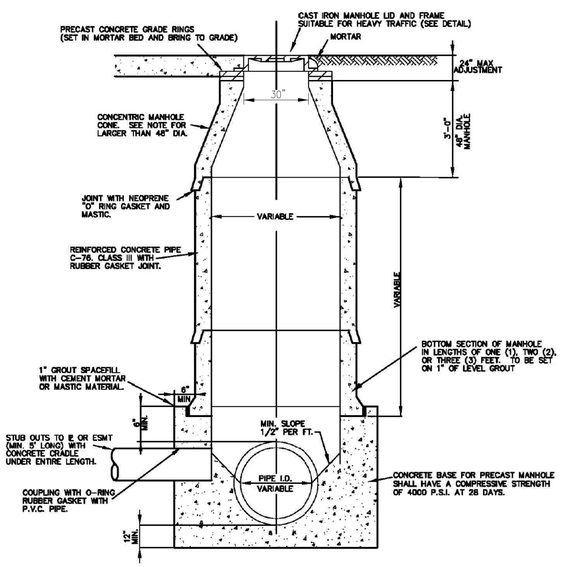

NOTES:
1. THE DIAMETER OF A MANHOLE CONSTRUCTED OVER THE CENTER OF A SEWER SHOULD VARY WITH THE SIZE OF THE SEWER. FOR EIGHT-INCH (8"), TEN-INCH (10"), AND TWELVE-INCH (12"), THE MANHOLE SHALL BE FOUR-FOOT (4') MINIMUM DIAMETER, FOR FIFTEEN-INCH (15"), EIGHTEEN-INCH (18"), TWENTY-ONE-INCH (21"), TWENTY-FOUR-INCH (24") AND TWENTY-SEVEN-INCH (27") SHALL BE FIVE-FOOT (5') MINIMUM DIAMETER; THIRTY-INCH (30") AND THIRTY-SIX-INCH (36") SHALL BE SIX-FOOT (6') MINIMUM DIAMETER. MANHOLES DEEPER THAN FIFTEEN FEET (15') SHALL BE A MINIMUM OF FIVE-FOOT (5') DIAMETER.

2. DROP MANHOLES SHALL BE REQUIRED WHEN THE INFLOW ELEVATION IS MORE THAN TWENTY-FOUR INCHES (24") ABOVE THE OUTFALL ELEVATION.

PRECAST
CONCRETE PIPE MANHOLE
NTS

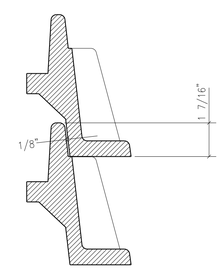

STACK DETAIL
(NTS)

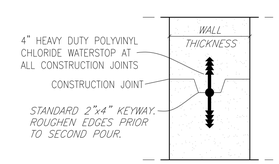

MANHOLE
CONSTRUCTION JOINT
KEYWAY WITH WATERSTOP

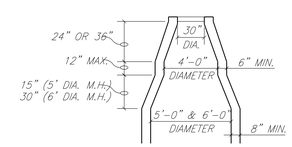

CONE TRANSITION
5' & 6' DIAMETER MANHOLES ONLY

MANHOLE CONE NOTE:
FOR MANHOLES WITH DIAMETER LARGER THAN 48" I.D., A PRE-CAST FLAT TOP MANHOLE COVER AS PER A.S.T.M. C478 SHALL BE INSTALLED.

SANITARY SEWER MANHOLE DETAILS						
LIGHT FARMS						
LFC Land Company LLC						
Collin County Municipal Utility District No. 1						
COLLIN COUNTY, TEXAS						
HUITT-ZOLLARS						
DESIGN	CHECKED	DATE	SCALE	NOTES	JOB NO.	SHT. NO.
HZI	HZI		NA		01-3905-52	08-11

I:/proj/0139050I/0139052-CCW&WW EXT/dgn/ccw-ww-det02-void.dgn

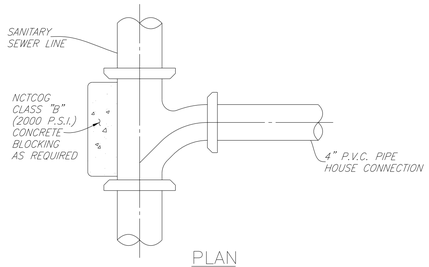

PLAN

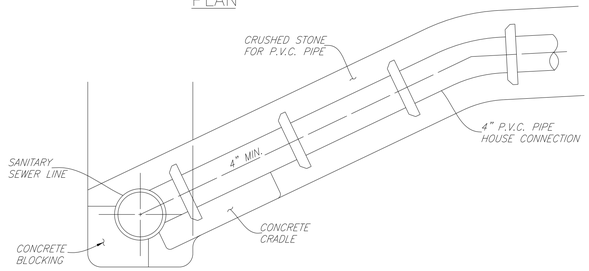

SECTION

TYPICAL SEWER HOUSE SERVICE CONNECTION

SANITARY SEWER CLEANOUT BOOTS SHALL BE BASS & HAYS # 339 OR APPROVED EQUAL.

(HOUSE_SERVICE)

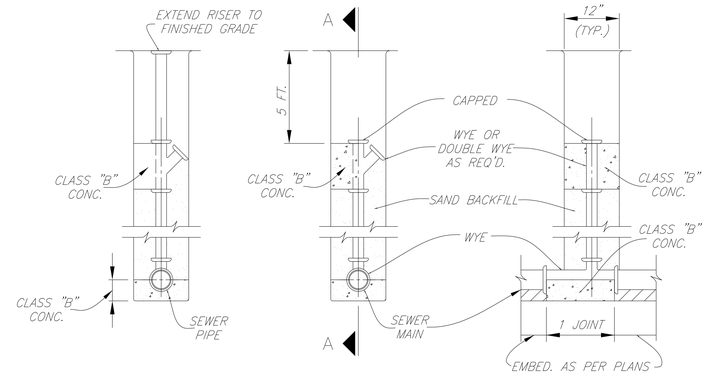

WITH CLEAN OUT

SECTION "A-A"

DEEP CUT CLEANOUT

(DEEPCUT-CO)

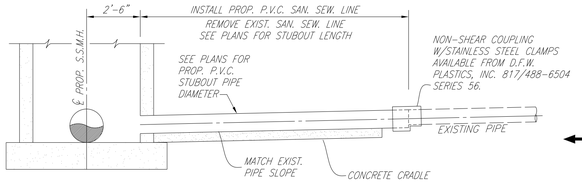

TYPICAL STUBOUT CONNECTION

NO SCALE

NOTE:
MATCH SOFFITS UPSTREAM OF MANHOLE
MATCH FLOW LINES DOWNSTREAM OF MANHOLE

(STUBOUT)

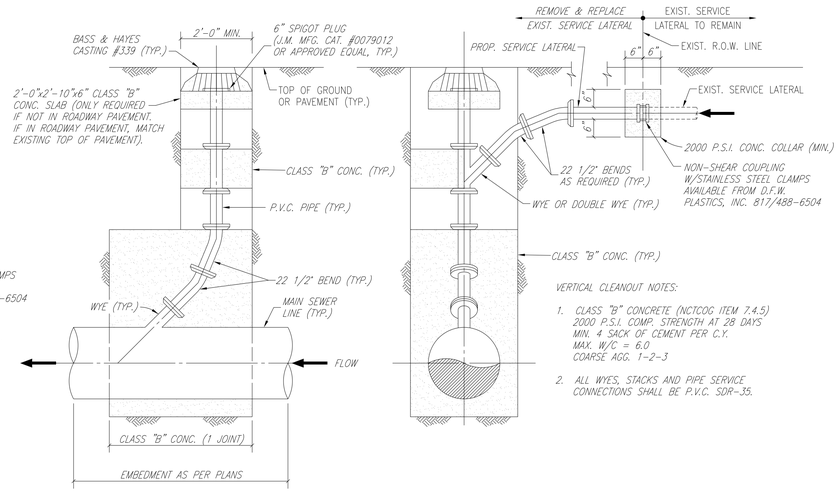

VERTICAL CLEANOUT NOTES:

1. CLASS "B" CONCRETE (NCTCOG ITEM 7.4.5) 2000 P.S.I. COMP. STRENGTH AT 28 DAYS MIN. 4 SACK OF CEMENT PER C.Y. MAX. W/C = 6.0 COARSE AGG. 1-2-3
2. ALL WYES, STACKS AND PIPE SERVICE CONNECTIONS SHALL BE P.V.C. SDR-35.

VERTICAL CLEANOUT CONNECTION

(CONNECTION, WYE, CONCRETE, BENDS, CASTING, ETC. ALL SUBSIDIARY TO CLEANOUT)

(VERT-CO)

Cleanout

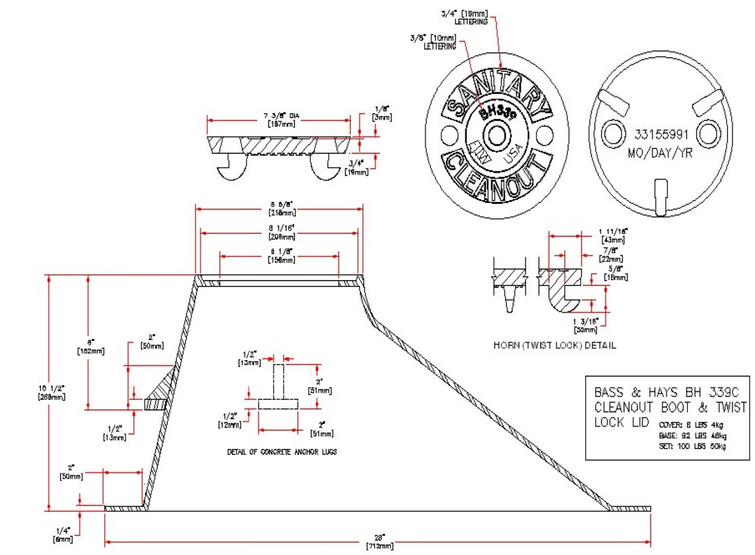

Valve box

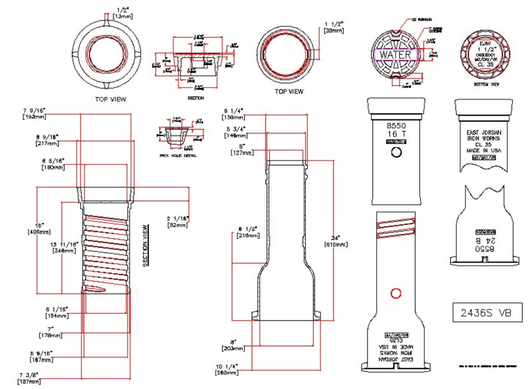

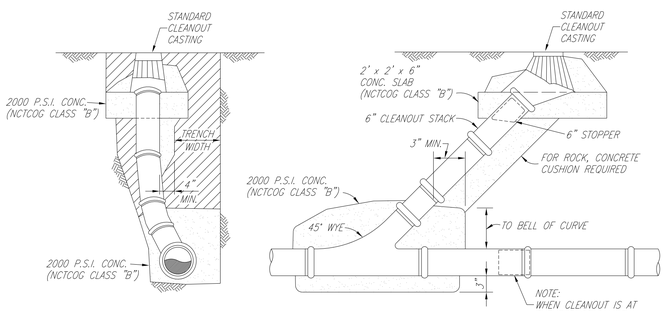

STANDARD CLEANOUT

NO SCALE

(CLEANOUT)

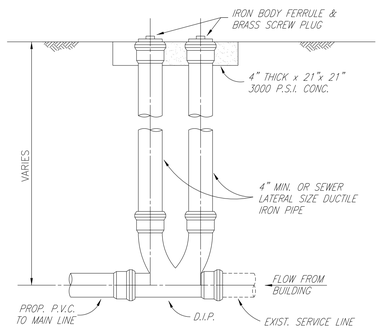

TYPICAL TWO WAY CLEANOUT

NO SCALE

(2-WAY-CO)

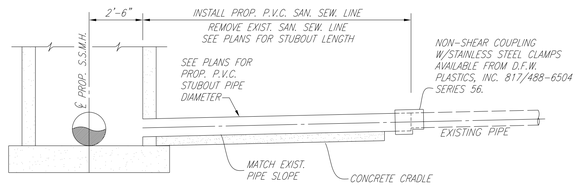

TYPICAL STUBOUT CONNECTION

NO SCALE

NOTE:
MATCH SOFFITS UPSTREAM OF MANHOLE
MATCH FLOW LINES DOWNSTREAM OF MANHOLE

(STUBOUT)

08-12

CITY OF CELINA, TEXAS

SANITARY SEWER SYSTEM
STANDARD DETAILS

I:/proj/0139050I/0139052-CCW&WW-EXT/dgn/ccw-ww-det2.dgn

TABLE OF DIMENSIONS & REINFORCING STEEL
(Wings for One Structure End)

Dimensions					Variable Reinforcing				Estimated Quantities per ft of wing length (2~Wings) (3)	
					Bars J1		Bars J2			
Maximum Wingwall Height Hw	W	X	Y	Z	Size	Spa	Size	Spa	Reinf (Lb/Ft)	Conc (CY/Ft)
2'-6"	2'- 5"	1'- 0"	9"	7"	#4	1'-0"	#4	1'-0"	33.73	0.248
3'-0"	2'- 5"	1'- 0"	9"	7"	#4	1'-0"	#4	1'-0"	37.07	0.261
3'-6"	2'- 5"	1'- 0"	9"	7"	#4	1'-0"	#4	1'-0"	37.74	0.273
4'-0"	2'- 5"	1'- 0"	9"	7"	#4	1'-0"	#4	1'-0"	38.41	0.285
4'-6"	3'- 2"	1'- 6"	1'- 0"	7"	#4	1'-0"	#4	1'-0"	41.75	0.330
5'-0"	3'- 2"	1'- 6"	1'- 0"	7"	#4	1'-0"	#4	1'-0"	45.09	0.343
5'-6"	3'- 2"	1'- 6"	1'- 0"	7"	#4	1'-0"	#4	1'-0"	45.75	0.355
6'-0"	3'- 2"	1'- 6"	1'- 0"	7"	#4	1'-0"	#4	1'-0"	46.42	0.367
7'-0"	3'- 8"	1'- 9"	1'- 3"	7"	#4	1'-0"	#4	1'-0"	52.77	0.414
8'-0"	4'- 2"	2'- 0"	1'- 6"	8"	#5	1'-0"	#4	1'-0"	60.19	0.486
9'-0"	4'- 8"	2'- 3"	1'- 9"	8"	#4	6"	#4	6"	81.49	0.535
10'-0"	5'- 2"	2'- 6"	2'- 0"	8"	#5	6"	#4	6"	97.25	0.584
11'-0"	5'- 8"	2'- 9"	2'- 3"	8"	#6	6"	#5	6"	133.65	0.634
12'-0"	6'- 2"	3'- 0"	2'- 6"	9"	#7	6"	#5	6"	162.29	0.721
13'-0"	6'- 8"	3'- 3"	2'- 9"	11"	#7	6"	#5	6"	178.80	0.856
14'-0"	7'- 2"	3'- 6"	3'- 0"	1'- 0"	#8	6"	#5	6"	216.78	0.959
15'-0"	7'- 8"	4'- 0"	3'- 0"	1'- 1"	#9	6"	#6	6"	283.06	1.068
16'-0"	8'- 2"	4'- 6"	3'- 0"	1'- 3"	#9	6"	#6	6"	297.02	1.234

TABLE OF WINGWALL REINFORCING (2~Wings)

Bar	Size	No.	Spa
D	#5	~	1'-0"
E	#4	~	1'-0"
F	#4	~	1'-0"
G	#6	4	~
M	#4	4	~
P	#4	~	1'-0"
R	#5	6	~
V	#4	~	1'-0"

TABLE OF ESTIMATED CULVERT TOEWALL QUANTITIES

Bar	Size	No.	Spa
L	#4	~	1'-6"
Q	#4	1	~
Reinf (Lb/Ft)			2.45
Conc (CY/Ft)			0.037

WING DIMENSION CALCULATIONS:

Formulas: (All values are in Feet)

Hw = H + T + C − 0.250'
A = (Hw − 0.333') (SL)
B = (A) Tangent (30°)
Lw = (A) ÷ Cosine (30°)

For Cast-in-place culverts:

Ltw = (N) (S) + (N + 1) (U)

For Precast culverts:

Ltw = (N) (2U + S) + (N − 1) (0.500')

Total Wingwall Area (Two Wings ~ S.F.) = (Hw + 0.333') (Lw)

Hw = Height of Wingwall
SL:1 = Side Slope Ratio (Horizontal:1 Vertical)
Lw = Length of Wingwall
Ltw = Culvert Toewall Length
N = Number of Culvert Spans

See applicable box culvert standard for H, S, T, and U values.

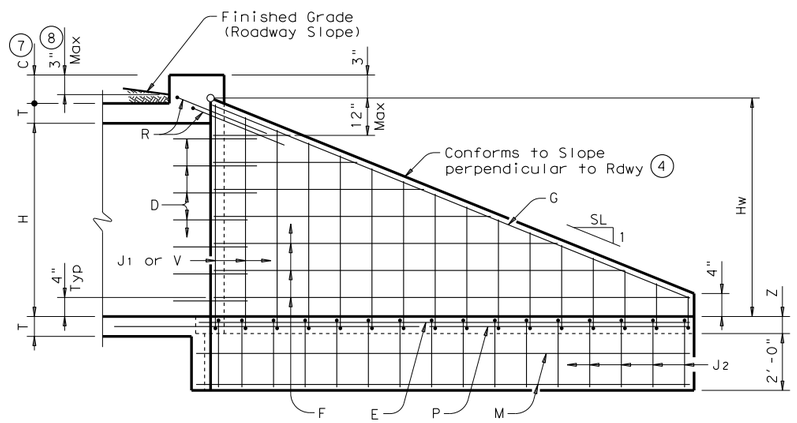

INSIDE ELEVATION
(Showing reinforcing. Culvert and Culvert Toewall reinforcing not shown for clarity.)

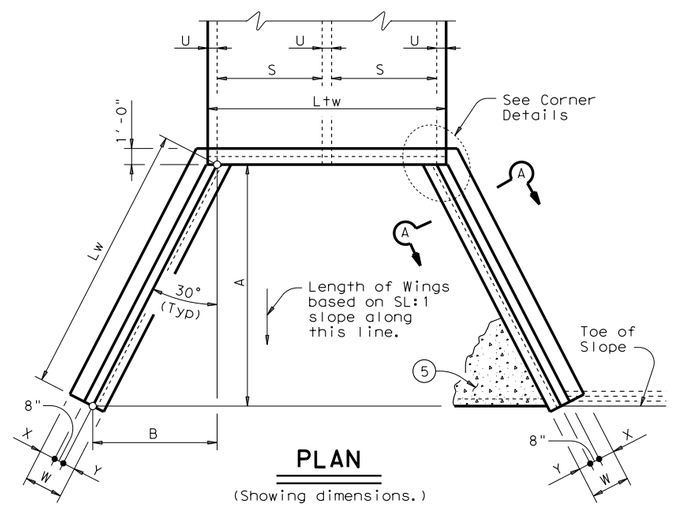

PLAN
(Showing dimensions.)

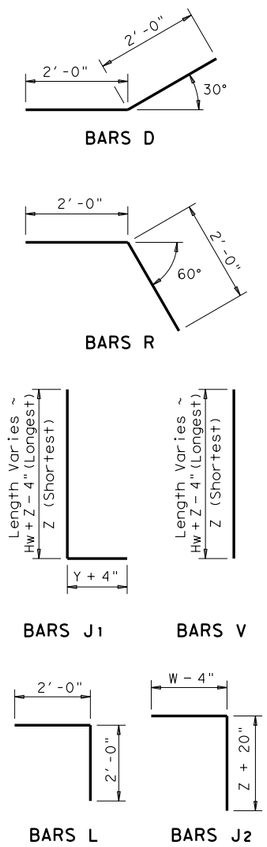

(1) Extend Bars P 3'-0" minimum into bottom slab of Box Culvert.

(2) Adjust to fit as necessary to maintain 1 ¼" clear cover and 4" minimum between bars.

(3) Quantities shown are based on an average wing height for two wings (one structure end). To determine total quantities for two wings multiply the tabulated values by Lw.

(4) Recommended values of Slope are: 2:1, 3:1, 4:1, & 6:1.

(5) When shown elsewhere on the plans, a 5" deep concrete riprap shall be constructed. Payment for riprap shall be as required by Item 432, "Riprap". Unless otherwise shown on the plans or directed by the Engineer, the riprap shall have a 6" wide by 1'-6" deep reinforced concrete toewall along all edges adjacent to natural ground; the toewall shall be reinforced by extending typical riprap reinforcing into the toewall; construction joints or grooved joints, oriented in the direction of flow, shall extend across the full distance of the riprap, at intervals of approximately 20'. When such riprap is provided, the culvert toewall shown in SECTION B-B will not be required.

(6) At Contractor's option, Culvert Toewall may be ended flush with Wingwall Toewall. Adjust reinforcing from that shown as necessary.

(7) 0" min to 5'-0" max. Estimated curb heights are shown elsewhere in the plans. For structures with pedestrian rail, bicycle rail or curbs taller than 1'-0", refer to ECD standard. For structures with T6 bridge rail, refer to T6-CM standard. For structures with traffic rail, other than T6, refer to RAC standard.

(8) For vehicle safety, curb heights and wall heights shall be reduced, if necessary, to provide a maximum 3" projection above finished grade. No changes will be made in quantities and no additional compensation will be allowed for this work.

GENERAL NOTES:

Designed according to AASHTO LRFD Specifications.
All reinforcing steel shall be Grade 60.
Synthetic fibers listed on the "Fibers for Concrete" Material Producer List (MPL) may be used in lieu of steel reinforcing in riprap concrete unless noted otherwise.
All concrete shall be Class "C" and shall have a minimum compressive strength of 3600 psi.
All reinforcing bars shall be adjusted to provide a minimum of 1 ¼" clear cover.
When structure is founded on solid rock, depth of toewalls for culverts and wingwalls may be reduced or eliminated as directed by the Engineer.
See BCS sheet for additional dimensions and information.
The quantities for concrete and reinforcing steel resulting from the formulas given on this sheet are for Contractor's information only.

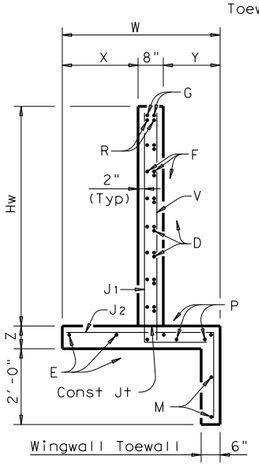

SECTION A-A

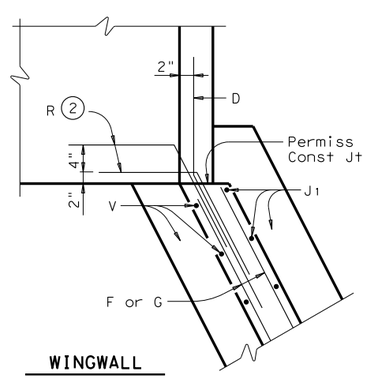

WINGWALL

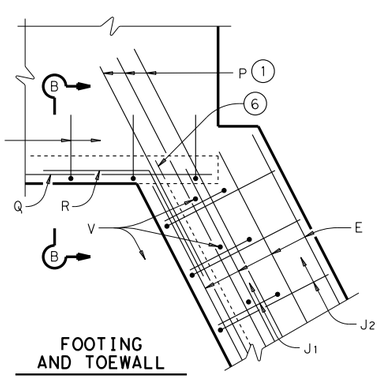

FOOTING AND TOEWALL

CORNER DETAILS
(Culvert and Culvert Toewall reinforcing not shown for clarity.)

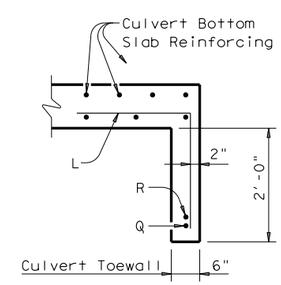

SECTION B-B (5)

Texas Department of Transportation — Bridge Division Standard

CONCRETE WINGWALLS
WITH FLARED WINGS FOR 0° SKEW BOX CULVERTS

FW-0

FILE: fw-0stde.dgn	DN: GAF	CK: CAT	DW: TxDOT	CK: GAF
©TxDOT February 2010	CONT	SECT	JOB	HIGHWAY
REVISIONS				
11-10: Add note for synthetic fibers.	DIST	COUNTY		SHEET NO.

DISCLAIMER:
The use of this standard is governed by the "Texas Engineering Practice Act". No warranty of any kind is made by TxDOT for any purpose whatsoever. TxDOT assumes no responsibility for the conversion of this standard to other formats or for incorrect results or damages resulting from its use.

DATE:
FILE:

TABLE OF VARIABLE DIMENSIONS AND QUANTITIES FOR ONE HEADWALL (4)

SLOPE	DIA OF PIPE, D	Values for one Pipe						Values to be added for each addt'l Pipe		
		W	X	Y	L	Reinf (Lbs)	Conc (CY) (1)	X and W	Reinf (Lbs)	Conc (CY) (1)
2:1	12"	4'- 7 1/2"	2'- 6"	2'-10"	3'- 3 1/4"	84	0.6	1'- 9"	20	0.2
	15"	5'- 5 3/4"	2'- 9 1/2"	3'- 4"	3'-10 1/4"	99	0.7	2'- 2"	24	0.3
	18"	6'- 4 1/4"	3'- 1"	3'-10"	4'- 5"	120	0.9	2'- 8"	32	0.3
	21"	7'- 2 3/4"	3'- 4 1/2"	4'- 4"	5'- 0"	137	1.1	3'- 1"	43	0.4
	24"	8'- 2 1/2"	3'- 9 1/2"	4'-10"	5'- 7"	158	1.3	3'- 7"	50	0.5
	27"	9'- 1"	4'- 1"	5'- 4"	6'- 2"	173	1.5	3'-11"	56	0.6
	30"	9'-11 1/2"	4'- 4 1/2"	5'-10"	6'- 8 3/4"	197	1.7	4'- 4"	65	0.8
	33"	10'-10"	4'- 8"	6'- 4"	7'- 3 3/4"	216	2.0	4'- 8"	71	0.9
	36"	11'- 8 1/4"	4'-11 1/2"	6'-10"	7'-10 3/4"	241	2.2	5'- 1"	81	1.0
	42"	13'- 5 1/4"	5'- 6 1/2"	7'-10"	9'- 0 1/2"	290	2.8	5'-10"	97	1.3
	48"	15'- 9"	6'- 1 1/2"	9'- 4"	10'- 9 1/4"	350	3.8	6'- 7"	117	1.7
	54"	17'- 5 3/4"	6'- 8 1/2"	10'- 4"	11'-11 1/4"	415	4.5	7'- 6"	151	2.1
	60"	19'- 2 3/4"	7'- 3 1/2"	11'- 4"	13'- 1"	469	5.3	8'- 3"	174	2.5
	66"	20'-11 1/2"	7'-10 1/2"	12'- 4"	14'- 3"	530	6.2	8'- 9"	194	2.9
	72"	22'- 8 1/2"	8'- 5 1/2"	13'- 4"	15'- 4 3/4"	587	7.1	9'- 4"	213	3.3
3:1	12"	6'- 3"	2'- 6"	4'- 3"	4'-11"	114	0.8	1'- 9"	22	0.2
	15"	7'- 5"	2'- 9 1/2"	5'- 0"	5'- 9 1/4"	133	1.1	2'- 2"	28	0.3
	18"	8'- 6 3/4"	3'- 1"	5'- 9"	6'- 7 3/4"	166	1.3	2'- 8"	37	0.5
	21"	9'- 8 3/4"	3'- 4 1/2"	6'- 6"	7'- 6"	189	1.6	3'- 1"	48	0.6
	24"	11'- 0"	3'- 9 1/2"	7'- 3"	8'- 4 1/2"	221	2.0	3'- 7"	58	0.7
	27"	12'- 2"	4'- 1"	8'- 0"	9'- 2 3/4"	245	2.3	3'-11"	67	0.8
	30"	13'- 4"	4'- 4 1/2"	8'- 9"	10'- 1 1/4"	287	2.7	4'- 4"	77	1.0
	33"	14'- 5 3/4"	4'- 8"	9'- 6"	10'-11 3/4"	310	3.1	4'- 8"	84	1.2
	36"	15'- 7 3/4"	4'-11 1/2"	10'- 3"	11'-10"	343	3.5	5'- 1"	96	1.4
	42"	17'-11 1/2"	5'- 6 1/2"	11'- 9"	13'- 6 3/4"	424	4.5	5'-10"	119	1.7
	48"	21'- 1 3/4"	6'- 1 1/2"	14'- 0"	16'- 2"	527	6.1	6'- 7"	146	2.3
	54"	23'- 5 1/2"	6'- 8 1/2"	15'- 6"	17'-10 3/4"	618	7.3	7'- 6"	186	2.9
	60"	25'- 9 1/4"	7'- 3 1/2"	17'- 0"	19'- 7 1/2"	707	8.7	8'- 3"	219	3.4
	66"	28'- 1"	7'-10 1/2"	18'- 6"	21'- 4 1/4"	797	10.1	8'- 9"	242	3.9
	72"	30'- 4 3/4"	8'- 5 1/2"	20'- 0"	23'- 1 1/4"	910	11.7	9'- 4"	272	4.4
4:1	12"	7'-10 3/4"	2'- 6"	5'- 8"	6'- 6 1/2"	144	1.1	1'- 9"	24	0.3
	15"	9'- 4"	2'- 9 1/2"	6'- 8"	7'- 8 1/2"	177	1.5	2'- 2"	32	0.4
	18"	10'- 9 1/2"	3'- 1"	7'- 8"	8'-10 1/4"	217	1.9	2'- 8"	42	0.5
	21"	12'- 2 3/4"	3'- 4 1/2"	8'- 8"	10'- 0"	254	2.3	3'- 1"	57	0.7
	24"	13'- 9 1/2"	3'- 9 1/2"	9'- 8"	11'- 2"	295	2.8	3'- 7"	67	0.9
	27"	15'- 3"	4'- 1"	10'- 8"	12'- 3 3/4"	328	3.3	3'-11"	77	1.0
	30"	16'- 8 1/4"	4'- 4 1/2"	11'- 8"	13'- 5 3/4"	379	3.8	4'- 4"	89	1.3
	33"	18'- 1 3/4"	4'- 8"	12'- 8"	14'- 7 1/2"	417	4.5	4'- 8"	101	1.4
	36"	19'- 7"	4'-11 1/2"	13'- 8"	15'- 9 1/4"	464	5.1	5'-1"	115	1.7
	42"	22'- 5 3/4"	5'- 6 1/2"	15'- 8"	18'- 1"	575	6.5	5'-10"	141	2.1
	48"	26'- 6 1/4"	6'- 1 1/2"	18'- 8"	21'- 6 3/4"	720	8.9	6'- 7"	175	2.8
	54"	29'- 5"	6'- 8 1/2"	20'- 8"	23'-10 1/4"	863	10.7	7'- 6"	226	3.6
	60"	32'- 3 3/4"	7'- 3 1/2"	22'- 8"	26'- 2"	984	12.7	8'- 3"	264	4.3
	66"	35'- 2 1/2"	7'-10 1/2"	24'- 8"	28'- 5 3/4"	1126	14.9	8'- 9"	300	4.9
	72"	38'- 1 1/4"	8'- 5 1/2"	26'- 8"	30'- 9 1/2"	1283	17.3	9'- 4"	334	5.6
6:1	12"	11'- 2"	2'- 6"	8'- 6"	9'- 9 3/4"	220	1.9	1'- 9"	28	0.4
	15"	13'- 2 1/4"	2'- 9 1/2"	10'- 0"	11'- 6 1/2"	264	2.5	2'- 2"	37	0.5
	18"	15'- 2 1/2"	3'- 1"	11'- 6"	13'- 3 1/4"	326	3.2	2'- 8"	50	0.7
	21"	17'- 2 3/4"	3'- 4 1/2"	13'- 0"	15'- 0 1/4"	381	3.9	3'- 1"	69	0.9
	24"	19'- 4 1/2"	3'- 9 1/2"	14'- 6"	16'- 9"	447	4.8	3'- 7"	80	1.2
	27"	21'- 4 3/4"	4'- 1"	16'- 0"	18'- 5 3/4"	506	5.7	3'-11"	96	1.4
	30"	23'- 5 1/4"	4'- 4 1/2"	17'- 6"	20'- 2 1/2"	587	6.7	4'- 4"	110	1.7
	33"	25'- 5 1/2"	4'- 8"	19'- 0"	21'-11 1/4"	667	7.8	4'- 8"	127	2.0
	36"	27'- 5 3/4"	4'-11 1/2"	20'- 6"	23'- 8"	727	9.0	5'- 1"	144	2.3
	42"	31'- 6 1/4"	5'- 6 1/2"	23'- 6"	27'- 1 1/2"	914	11.5	5'-10"	179	3.0
	48"	37'- 3 1/2"	6'- 1 1/2"	28'- 0"	32'- 4"	1181	15.9	6'- 7"	231	4.0
	54"	41'- 4 1/4"	6'- 8 1/2"	31'- 0"	35'- 9 1/2"	1412	19.2	7'- 6"	300	5.0
	60"	45'- 4 3/4"	7'- 3 1/2"	34'- 0"	39'- 3"	1619	22.9	8'- 3"	353	6.0

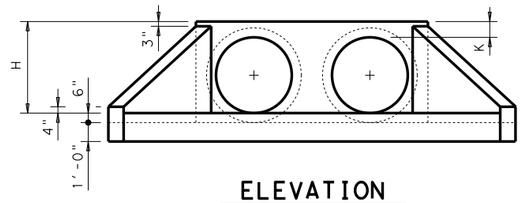

ELEVATION

Showing dimensions

1. Quantities shown are for concrete pipe and will increase slightly for metal pipe installations.
2. For vehicle safety, curbs shall project no more than 3" above finished grade. Curb heights shall be reduced, if necessary, to meet these requirements. No changes will be made in quantities and no additional compensation will be allowed for this work.
3. Provide a 1'-0" footing as shown where required to maintain 4" Min cover for pipes.
4. Quantities shown are for one structure end only (one headwall).
5. Min Length = 6" + 3" x $\left(\frac{12 \times H - 7}{12 \times L}\right)$

   Max Length = 12 x H - 3" x $\left(\frac{12 \times H - 7}{12 \times L}\right)$ - 1"
6. Lengths of wings based on SL:1 Slope along this line.

TABLE OF REINFORCING STEEL (4)

Bar	Size	Spa	No.
A	# 4	1'-0"	~
B	# 3	1'-6"	~
C	# 4	1'-0"	~
D	# 3	1'-0"	~
E	# 5	~	4
F	# 5	~	~
G	# 3	~	2
S	# 4	~	6
V	# 4	1'-0"	~
W	# 5	~	4

TABLE OF CONSTANT DIMENSIONS

DIA OF PIPE, D	G	K	H
12"	9"	1'- 0"	2'- 0"
15"	11"	1'- 0"	2'- 3"
18"	1'- 2"	1'- 0"	2'- 6"
21"	1'- 4"	1'- 0"	2'- 9"
24"	1'- 7"	1'- 0"	3'- 0"
27"	1'- 8"	1'- 0"	3'- 3"
30"	1'-10"	1'- 0"	3'- 6"
33"	1'-11"	1'- 0"	3'- 9"
36"	2'- 1"	1'- 0"	4'- 0"
42"	2'- 4"	1'- 0"	4'- 6"
48"	2'- 7"	1'- 3"	5'- 3"
54"	3'- 0"	1'- 3"	5'- 9"
60"	3'- 3"	1'- 3"	6'- 3"
66"	3'- 3"	1'- 3"	6'- 9"
72"	3'- 4"	1'- 3"	7'- 3"

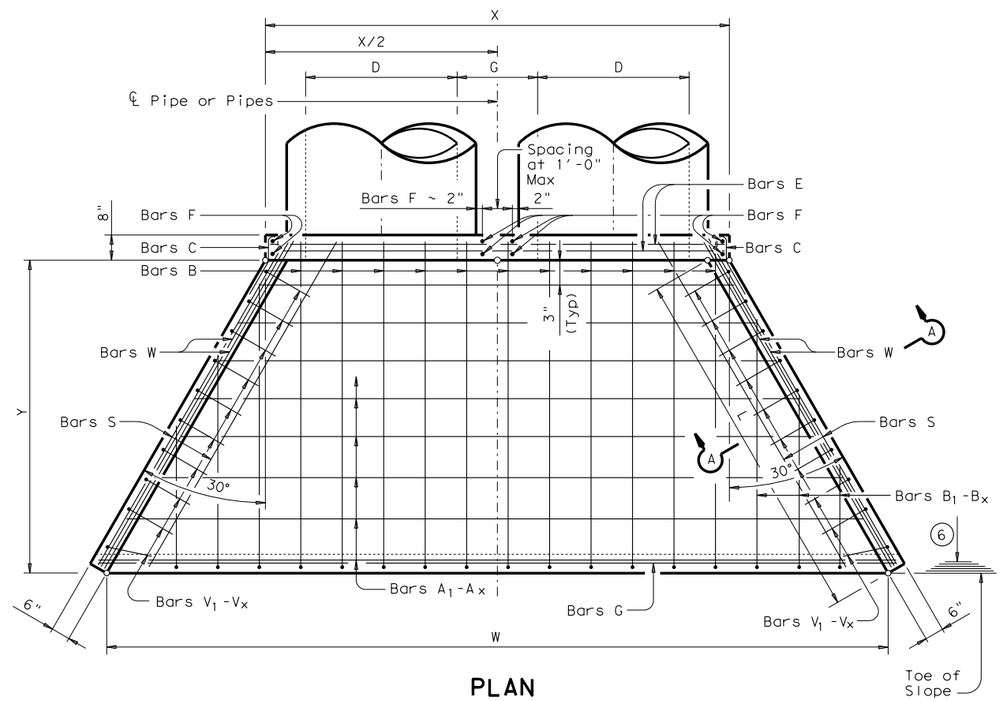

PLAN

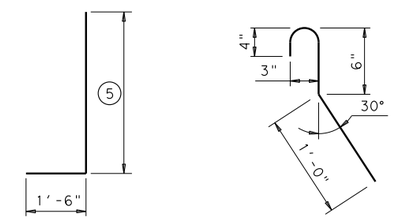

BARS V **BARS C** (2'-0" long)

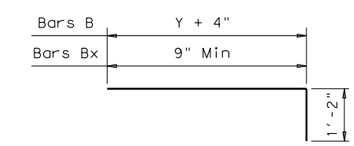

BARS B & B1-Bx

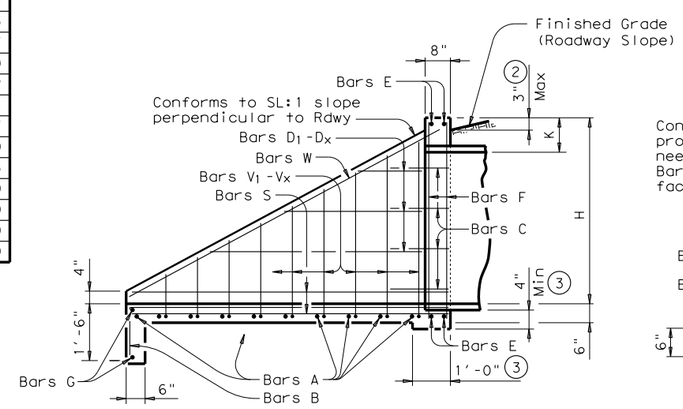

TYPICAL WING ELEVATION

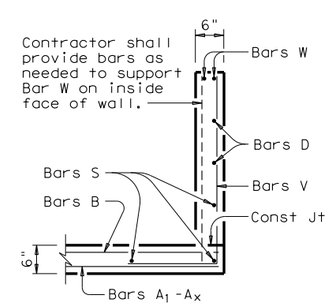

SECTION A-A

GENERAL NOTES:

Designed according to AASHTO LRFD Specifications.

Reinforcing steel shall be placed with the center of the outside layer of bars 2" from the surface of the concrete.

All reinforcing steel shall be Grade 60.

All concrete shall be Class "C" and shall have a minimum compressive strength of 3600 psi.

No bridge rails of any type may be mounted directly to these culvert headwalls.

Texas Department of Transportation — Bridge Division Standard

CONCRETE HEADWALLS WITH FLARED WINGS FOR 0° SKEW PIPE CULVERTS

CH-FW-0

FILE: chfw00se.dgn	DN: TxDOT	CK: TxDOT	DW: TxDOT	CK: GAF
©TxDOT February 2010	CONT	SECT	JOB	HIGHWAY
REVISIONS	DIST		COUNTY	SHEET NO.

DISCLAIMER:
The use of this standard is governed by the "Texas Engineering Practice Act". No warranty of any kind is made by TxDOT for any purpose whatsoever. TxDOT assumes no responsibility for the conversion of this standard to other formats or for incorrect results or damages resulting from its use.

DATE:
FILE:

DISCLAIMER:
The use of this standard is governed by the "Texas Engineering Practice Act". No warranty of any kind is made by TxDOT for any purpose whatsoever. TxDOT assumes no responsibility for the conversion of this standard to other formats or for incorrect results or damages resulting from its use.

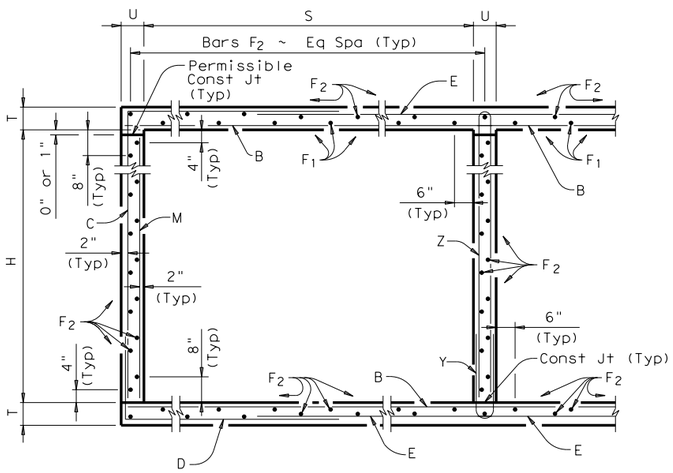

TYPICAL SECTION

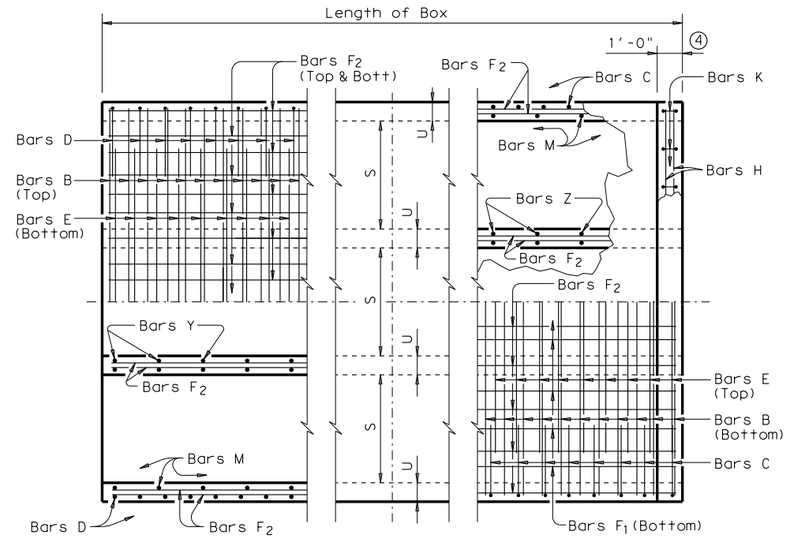

BOTTOM SLAB

TOP SLAB

PART PLANS

1. 0" min to 5'-0" max. Estimated curb heights are shown elsewhere in the plans. For structures with pedestrian rail, bicycle rail or curbs taller than 1'-0", refer to ECD standard. For structures with T6 bridge rail, refer to T6-CM standard. For structures with traffic rail, other than T6, refer to RAC standard.

2. For vehicle safety, the following requirements must be met:
   - For structures without bridge rail, curbs shall project no more than 3" above finished grade.
   - For structures with bridge rail, curbs shall be flush with finished grade.
   Curb heights shall be reduced, if necessary, to meet the above requirements. No changes will be made in quantities and no additional compensation will be allowed for this work.

3. For curbs less than 1'-0" high, tilt bars K or reduce bar height as necessary to maintain cover. For curbs less than 3" high, bars K may be omitted.

4. 1'-0" typical. 2'-0" when RAC standard is referred to elsewhere in the plans.

Deformed welded wire reinforcement (WWR) meeting the requirements of ASTM A1064 may be used to replace conventional reinforcement shown at the Contractor's option. The area of required reinforcement may be reduced by the ratio of 60 ksi / 70 ksi. Spacing of WWR is limited to 4" Min and 18" Max. When required, provide lap splices in the WWR of the same length required for the equivalent bar size, rounded up for wire sizes between conventional bar sizes.

Example Conversion: Replacement of No. 6 Gr 60 at 6" Spacing with WWR.
WWR required = (0.44 sq in/ 0.5') x (60 ksi/70 ksi) = 0.754 sq in/ft.
If D30.6 wire is used to meet the 0.754 sq in/ft requirement in this example, the required spacing = (0.306 sq in/ 0.754 sq in/ft) x 12 in/ft = 4.87" Max spacing.
Required lap length for the provided D30.6 wire is 2'-2" (Lap required for uncoated No. 5 bars, as shown in Item 440).

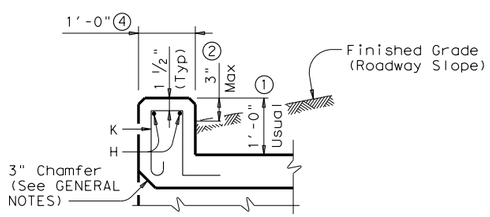

SECTION THRU CURB

H	Bar Dimensions	
	"X"	"Y"
3'-0"	3'-5"	2'-2"
4'-0"	4'-5"	2'-2"
5'-0"	5'-5"	2'-2"
6'-0"	6'-5"	2'-2"
7'-0"	7'-5"	2'-2"

GENERAL NOTES:

Designed according to AASHTO LRFD Specifications.
Designed to the maximum fill height shown.
All reinforcing steel shall be Grade 60.
All concrete shall be Class "C" with these exceptions: use Class "S" for top slabs of culverts with overlay, with 1-to-2 course surface treatment, or with the top slab as the final riding surface.
Class "C" concrete shall have a minimum compressive strength of 3,600 psi. Class "S" concrete shall have a minimum compressive strength of 4,000 psi.
The use of permanent forms is not allowed.
The bottom edge of the top slab shall be chamfered 3" at the entrance.
Reinforcing bars shall be adjusted to provide a minimum of 1 1/4" clear cover.
Construction joints shown at the flow line may be raised a maximum of 6" at the Contractor's option. If this option is used, Bars M may be cut off or raised, Bars C and D may be reversed, and Bars Y and Z may be reversed.
See standard MC-MD for skewed ends, angle sections and lengthening details.

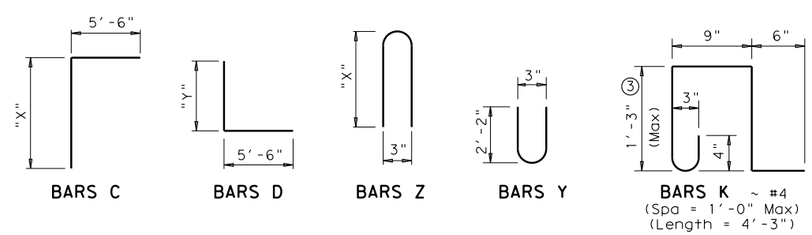

HL93 LOADING

SHEET 1 OF 2

Texas Department of Transportation

Bridge Division Standard

MULTIPLE BOX CULVERTS CAST-IN-PLACE
7'-0" SPAN
0' TO 10' FILL

MC-7-10

FILE: mc710ste.dgn	DN: GAF	CK: LMW	DW: BWH/TxDOT	CK: GAF
©TxDOT February 2010	CONT	SECT	JOB	HIGHWAY
REVISIONS				
10-12: Added WWR	DIST	COUNTY		SHEET NO.

DATE:
FILE:

BILLS OF REINFORCING STEEL (For Box Length = 40 feet)

NUMBER OF SPANS	SECTION DIMENSIONS				Bars B					Bars C & D							Bars E					Bars F_1 ~#4				Bars F_2 ~#4 at 1'-6" Max			Bars M~#4 at 1'-6" Max			Bars Y & Z~#4 at 10" Max					Bars H 4~#4		Bars K		QUANTITIES: Per foot of Barrel		Curb		Total	
													Bar C		Bar D																															
	S	H	T	U	No.	Size	Spa	Length	Wt	No.	Size	Spa	Length	Wt	Length	Wt	No.	Size	Spa	Length	Wt	No.	Spa	Length	Wt	No.	Length	Wt	No.	Length	Wt	No.	Bar Y Length	Bar Y Wt	Bar Z Length	Bar Z Wt	Length	Weight	No.	Weight	Conc (CY)	Reinf (Lb)	Conc (CY)	Reinf (Lb)	Conc (CY)	Reinf (Lb)
2	7'-0"	3'-0"	7"	7"	194	#5	5"	15'- 6"	3,136	162	#4	6"	8'-11"	965	7'- 8"	830	194	#5	5"	8'- 0"	1,619	20	8"	39'-9"	531	54	39'-9"	1,434	56	3'- 0"	112	49	4'- 6"	147	7'- 0"	229	15'- 6"	41	34	97	0.875	225.1	1.2	138	36.2	9,141
3	7'-0"	3'-0"	7"	7"	194	#5	5"	23'- 1"	4,671	162	#4	6"	8'-11"	965	7'- 8"	830	194	#5	5"	15'- 7"	3,153	30	8"	39'-9"	797	77	39'-9"	2,045	56	3'- 0"	112	98	4'- 6"	295	7'- 0"	458	23'- 1"	62	48	136	1.267	333.2	1.7	198	52.4	13,524
4	7'-0"	3'-0"	7"	7"	194	#5	5"	30'- 8"	6,205	162	#4	6"	8'-11"	965	7'- 8"	830	194	#5	5"	23'- 2"	4,688	40	8"	39'-9"	1,062	100	39'-9"	2,655	56	3'- 0"	112	147	4'- 6"	442	7'- 0"	687	30'- 8"	82	64	182	1.660	441.2	2.3	264	68.7	17,910
5	7'-0"	3'-0"	7"	7"	194	#5	5"	38'- 3"	7,740	162	#4	6"	8'-11"	965	7'- 8"	830	194	#5	5"	30'- 9"	6,222	50	8"	39'-9"	1,328	123	39'-9"	3,266	56	3'- 0"	112	196	4'- 6"	589	7'- 0"	916	38'- 3"	102	80	227	2.052	549.2	2.9	329	85.0	22,297
6	7'-0"	3'-0"	7"	7"	194	#5	5"	45'-10"	9,274	162	#4	6"	8'-11"	965	7'- 8"	830	194	#5	5"	38'- 4"	7,756	60	8"	39'-9"	1,593	146	39'-9"	3,877	56	3'- 0"	112	245	4'- 6"	736	7'- 0"	1,146	45'-10"	122	94	267	2.445	657.2	3.4	389	101.2	26,678
2	7'-0"	4'-0"	7"	7"	194	#5	5"	15'- 6"	3,136	162	#4	6"	9'-11"	1,073	7'- 8"	830	194	#5	5"	8'- 0"	1,619	20	8"	39'-9"	531	54	39'-9"	1,434	56	4'- 0"	150	49	4'- 6"	147	9'- 0"	295	15'- 6"	41	34	97	0.940	230.4	1.2	138	38.8	9,353
3	7'-0"	4'-0"	7"	7"	194	#5	5"	23'- 1"	4,671	162	#4	6"	9'-11"	1,073	7'- 8"	830	194	#5	5"	15'- 7"	3,153	30	8"	39'-9"	797	77	39'-9"	2,045	56	4'- 0"	150	98	4'- 6"	295	9'- 0"	589	23'- 1"	62	48	136	1.354	340.1	1.7	198	55.9	13,801
4	7'-0"	4'-0"	7"	7"	194	#5	5"	30'- 8"	6,205	162	#4	6"	9'-11"	1,073	7'- 8"	830	194	#5	5"	23'- 2"	4,688	40	8"	39'-9"	1,062	100	39'-9"	2,655	56	4'- 0"	150	147	4'- 6"	442	9'- 0"	884	30'- 8"	82	64	182	1.768	449.7	2.3	264	73.0	18,253
5	7'-0"	4'-0"	7"	7"	194	#5	5"	38'- 3"	7,740	162	#4	6"	9'-11"	1,073	7'- 8"	830	194	#5	5"	30'- 9"	6,222	50	8"	39'-9"	1,328	123	39'-9"	3,266	56	4'- 0"	150	196	4'- 6"	589	9'- 0"	1,178	38'- 3"	102	80	227	2.182	559.4	2.9	329	90.2	22,705
6	7'-0"	4'-0"	7"	7"	194	#5	5"	45'-10"	9,274	162	#4	6"	9'-11"	1,073	7'- 8"	830	194	#5	5"	38'- 4"	7,756	60	8"	39'-9"	1,593	146	39'-9"	3,877	56	4'- 0"	150	245	4'- 6"	736	9'- 0"	1,473	45'-10"	122	94	267	2.596	669.1	3.4	389	107.2	27,151
2	7'-0"	5'-0"	7"	7"	194	#5	5"	15'- 6"	3,136	162	#4	6"	10'-11"	1,181	7'- 8"	830	194	#5	5"	8'- 0"	1,619	20	8"	39'-9"	531	60	39'-9"	1,593	56	5'- 0"	187	49	4'- 6"	147	11'- 0"	360	15'- 6"	41	34	97	1.005	239.6	1.2	138	41.4	9,722
3	7'-0"	5'-0"	7"	7"	194	#5	5"	23'- 1"	4,671	162	#4	6"	10'-11"	1,181	7'- 8"	830	194	#5	5"	15'- 7"	3,153	30	8"	39'-9"	797	85	39'-9"	2,257	56	5'- 0"	187	98	4'- 6"	295	11'- 0"	720	23'- 1"	62	48	136	1.440	352.3	1.7	198	59.3	14,289
4	7'-0"	5'-0"	7"	7"	194	#5	5"	30'- 8"	6,205	162	#4	6"	10'-11"	1,181	7'- 8"	830	194	#5	5"	23'- 2"	4,688	40	8"	39'-9"	1,062	110	39'-9"	2,921	56	5'- 0"	187	147	4'- 6"	442	11'- 0"	1,080	30'- 8"	82	64	182	1.876	464.9	2.3	264	77.3	18,860
5	7'-0"	5'-0"	7"	7"	194	#5	5"	38'- 3"	7,740	162	#4	6"	10'-11"	1,181	7'- 8"	830	194	#5	5"	30'- 9"	6,222	50	8"	39'-9"	1,328	135	39'-9"	3,585	56	5'- 0"	187	196	4'- 6"	589	11'- 0"	1,440	38'- 3"	102	80	227	2.312	577.6	2.9	329	95.4	23,431
6	7'-0"	5'-0"	7"	7"	194	#5	5"	45'-10"	9,274	162	#4	6"	10'-11"	1,181	7'- 8"	830	194	#5	5"	38'- 4"	7,756	60	8"	39'-9"	1,593	160	39'-9"	4,248	56	5'- 0"	187	245	4'- 6"	736	11'- 0"	1,800	45'-10"	122	94	267	2.747	690.1	3.4	389	113.3	27,994
2	7'-0"	6'-0"	7"	7"	194	#5	5"	15'- 6"	3,136	162	#4	6"	11'-11"	1,290	7'- 8"	830	194	#5	5"	8'- 0"	1,619	20	8"	39'-9"	531	66	39'-9"	1,752	56	6'- 0"	224	49	4'- 6"	147	13'- 0"	426	15'- 6"	41	34	97	1.069	248.9	1.2	138	44.0	10,093
3	7'-0"	6'-0"	7"	7"	194	#5	5"	23'- 1"	4,671	162	#4	6"	11'-11"	1,290	7'- 8"	830	194	#5	5"	15'- 7"	3,153	30	8"	39'-9"	797	93	39'-9"	2,469	56	6'- 0"	224	98	4'- 6"	295	13'- 0"	851	23'- 1"	62	48	136	1.527	364.5	1.7	198	62.8	14,778
4	7'-0"	6'-0"	7"	7"	194	#5	5"	30'- 8"	6,205	162	#4	6"	11'-11"	1,290	7'- 8"	830	194	#5	5"	23'- 2"	4,688	40	8"	39'-9"	1,062	120	39'-9"	3,186	56	6'- 0"	224	147	4'- 6"	442	13'- 0"	1,277	30'- 8"	82	64	182	1.984	480.1	2.3	264	81.7	19,468
5	7'-0"	6'-0"	7"	7"	194	#5	5"	38'- 3"	7,740	162	#4	6"	11'-11"	1,290	7'- 8"	830	194	#5	5"	30'- 9"	6,222	50	8"	39'-9"	1,328	147	39'-9"	3,903	56	6'- 0"	224	196	4'- 6"	589	13'- 0"	1,702	38'- 3"	102	80	227	2.441	595.7	2.9	329	100.5	24,157
6	7'-0"	6'-0"	7"	7"	194	#5	5"	45'-10"	9,274	162	#4	6"	11'-11"	1,290	7'- 8"	830	194	#5	5"	38'- 4"	7,756	60	8"	39'-9"	1,593	174	39'-9"	4,620	56	6'- 0"	224	245	4'- 6"	736	13'- 0"	2,128	45'-10"	122	94	267	2.899	711.3	3.4	389	119.4	28,840
2	7'-0"	7'-0"	7"	7"	194	#5	5"	15'- 6"	3,136	162	#4	6"	12'-11"	1,398	7'- 8"	830	194	#5	5"	8'- 0"	1,619	20	8"	39'-9"	531	66	39'-9"	1,752	56	7'- 0"	262	49	4'- 6"	147	15'- 0"	491	15'- 6"	41	34	97	1.134	254.2	1.2	138	46.6	10,304
3	7'-0"	7'-0"	7"	7"	194	#5	5"	23'- 1"	4,671	162	#4	6"	12'-11"	1,398	7'- 8"	830	194	#5	5"	15'- 7"	3,153	30	8"	39'-9"	797	93	39'-9"	2,469	56	7'- 0"	262	98	4'- 6"	295	15'- 0"	982	23'- 1"	62	48	136	1.613	371.4	1.7	198	66.2	15,055
4	7'-0"	7'-0"	7"	7"	194	#5	5"	30'- 8"	6,205	162	#4	6"	12'-11"	1,398	7'- 8"	830	194	#5	5"	23'- 2"	4,688	40	8"	39'-9"	1,062	120	39'-9"	3,186	56	7'- 0"	262	147	4'- 6"	442	15'- 0"	1,473	30'- 8"	82	64	182	2.092	488.7	2.3	264	86.0	19,810
5	7'-0"	7'-0"	7"	7"	194	#5	5"	38'- 3"	7,740	162	#4	6"	12'-11"	1,398	7'- 8"	830	194	#5	5"	30'- 9"	6,222	50	8"	39'-9"	1,328	147	39'-9"	3,903	56	7'- 0"	262	196	4'- 6"	589	15'- 0"	1,964	38'- 3"	102	80	227	2.571	605.9	2.9	329	105.7	24,565
6	7'-0"	7'-0"	7"	7"	194	#5	5"	45'-10"	9,274	162	#4	6"	12'-11"	1,398	7'- 8"	830	194	#5	5"	38'- 4"	7,756	60	8"	39'-9"	1,593	174	39'-9"	4,620	56	7'- 0"	262	245	4'- 6"	736	15'- 0"	2,455	45'-10"	122	94	267	3.050	723.1	3.4	389	125.4	29,313

Deformed welded wire reinforcement (WWR) meeting the requirements of ASTM A1064 may be used to replace conventional reinforcement shown at the Contractor's option. The area of required reinforcement may be reduced by the ratio of 60 ksi / 70 ksi. Spacing of WWR is limited to 4" Min and 18" Max. When required, provide lap splices in the WWR of the same length required for the equivalent bar size, rounded up for wire sizes between conventional bar sizes.

Example Conversion: Replacement of No. 6 Gr 60 at 6" Spacing with WWR.
WWR required = (0.44 sq in/ 0.5') x (60 ksi/70 ksi) = 0.754 sq in/ft.
If D30.6 wire is used to meet the 0.754 sq in/ft requirement in this example, the required spacing = (0.306 sq in/ 0.754 sq in/ft) x 12 in/ft = 4.87" Max spacing.
Required lap length for the provided D30.6 wire is 2'-2" (Lap required for uncoated No. 5 bars, as shown in Item 440).

DISCLAIMER:
The use of this standard is governed by the "Texas Engineering Practice Act". No warranty of any kind is made by TxDOT for any purpose whatsoever. TxDOT assumes no responsibility for the conversion of this standard to other formats or for incorrect results or damages resulting from its use.

HL93 LOADING

Texas Department of Transportation — Bridge Division Standard

MULTIPLE BOX CULVERTS CAST-IN-PLACE
7'-0" SPAN
0' TO 10' FILL

MC-7-10

FILE: mc710ste.dgn	DN: GAF	CK: LMW	DW: BWH/TxDOT	CK: GAF
©TxDOT February 2010	CONT	SECT	JOB	HIGHWAY
REVISIONS				
10-12: Added WWR	DIST	COUNTY		SHEET NO.

DATE:
FILE:

DISCLAIMER:
The use of this standard is governed by the "Texas Engineering Practice Act". No warranty of any kind is made by TxDOT for any purpose whatsoever. TxDOT assumes no responsibility for the conversion of this standard to other formats or for incorrect results or damages resulting from its use.

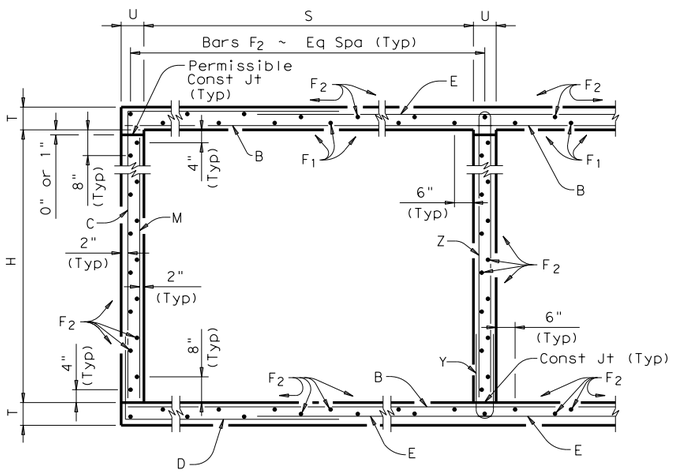

TYPICAL SECTION

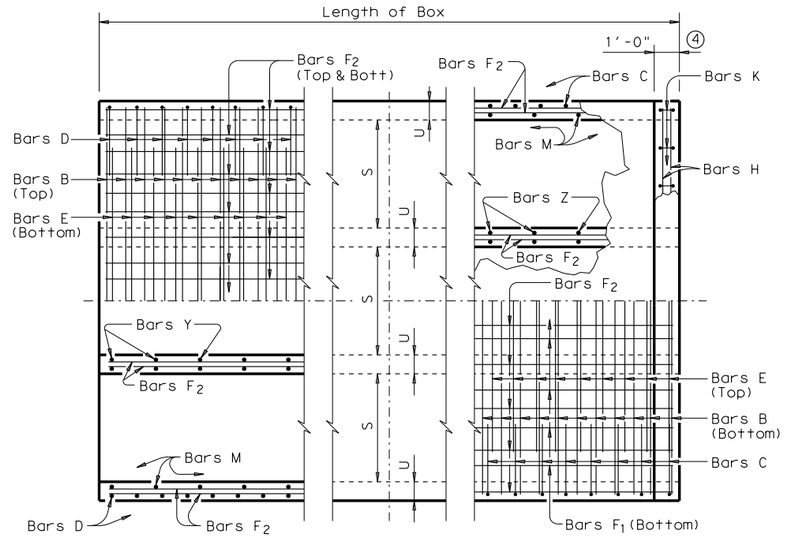

BOTTOM SLAB

TOP SLAB

PART PLANS

1. 0" min to 5'-0" max. Estimated curb heights are shown elsewhere in the plans. For structures with pedestrian rail, bicycle rail or curbs taller than 1'-0", refer to ECD standard. For structures with T6 bridge rail, refer to T6-CM standard. For structures with traffic rail, other than T6, refer to RAC standard.

2. For vehicle safety, the following requirements must be met:
   - For structures without bridge rail, curbs shall project no more than 3" above finished grade.
   - For structures with bridge rail, curbs shall be flush with finished grade.
   Curb heights shall be reduced, if necessary, to meet the above requirements. No changes will be made in quantities and no additional compensation will be allowed for this work.

3. For curbs less than 1'-0" high, tilt bars K or reduce bar height as necessary to maintain cover. For curbs less than 3" high, bars K may be omitted.

4. 1'-0" typical. 2'-0" when RAC standard is referred to elsewhere in the plans.

Deformed welded wire reinforcement (WWR) meeting the requirements of ASTM A1064 may be used to replace conventional reinforcement shown at the Contractor's option. The area of required reinforcement may be reduced by the ratio of 60 ksi / 70 ksi. Spacing of WWR is limited to 4" Min and 18" Max. When required, provide lap splices in the WWR of the same length required for the equivalent bar size, rounded up for wire sizes between conventional bar sizes.

Example Conversion: Replacement of No. 6 Gr 60 at 6" Spacing with WWR.
WWR required = (0.44 sq in/ 0.5') x (60 ksi/70 ksi) = 0.754 sq in/ft.
If D30.6 wire is used to meet the 0.754 sq in/ft requirement in this example, the required spacing = (0.306 sq in/ 0.754 sq in/ft) x 12 in/ft = 4.87" Max spacing.
Required lap length for the provided D30.6 wire is 2'-2" (Lap required for uncoated No. 5 bars, as shown in Item 440).

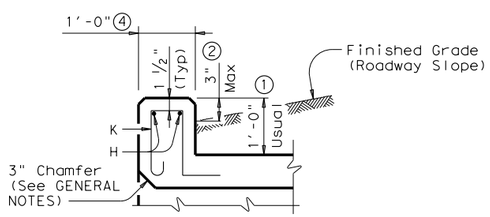

SECTION THRU CURB

H	Bar Dimensions	
	"X"	"Y"
3'-0"	3'-5"	2'-2"
4'-0"	4'-5"	2'-2"
5'-0"	5'-5"	2'-2"
6'-0"	6'-5"	2'-2"

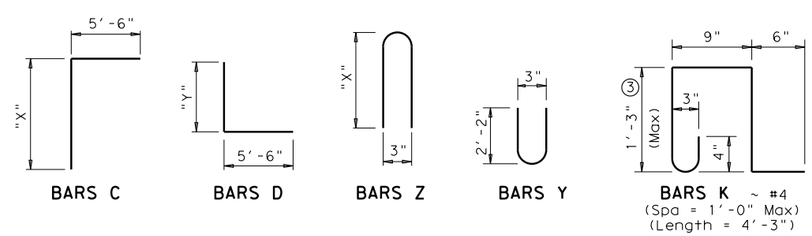

GENERAL NOTES:

Designed according to AASHTO LRFD Specifications.
Designed to the maximum fill height shown.
All reinforcing steel shall be Grade 60.
All concrete shall be Class "C" with these exceptions: use Class "S" for top slabs of culverts with overlay, with 1-to-2 course surface treatment, or with the top slab as the final riding surface.
Class "C" concrete shall have a minimum compressive strength of 3,600 psi. Class "S" concrete shall have a minimum compressive strength of 4,000 psi.
The use of permanent forms is not allowed.
The bottom edge of the top slab shall be chamfered 3" at the entrance.
Reinforcing bars shall be adjusted to provide a minimum of 1 1/4" clear cover.
Construction joints shown at the flow line may be raised a maximum of 6" at the Contractor's option. If this option is used, Bars M may be cut off or raised, Bars C and D may be reversed, and Bars Y and Z may be reversed.
See standard MC-MD for skewed ends, angle sections and lengthening details.

HL93 LOADING

SHEET 1 OF 2

Texas Department of Transportation

Bridge Division Standard

MULTIPLE BOX CULVERTS CAST-IN-PLACE
6'-0" SPAN
0' TO 16' FILL

MC-6-16

FILE: mc616ste.dgn	DN: GAF	CK: LMW	DW: BWH/TxDOT	CK: GAF
©TxDOT February 2010	CONT	SECT	JOB	HIGHWAY
REVISIONS				
10-12: Added WWR	DIST	COUNTY		SHEET NO.

DATE:
FILE:

BILLS OF REINFORCING STEEL (For Box Length = 40 feet)

NUMBER OF SPANS	SECTION DIMENSIONS				Bars B					Bars C & D							Bars E					Bars F_1 ~#4				Bars F_2 ~#4 at 1'-6" Max			Bars M~#4 at 1'-6" Max			Bars Y & Z~#4 at 1'-0" Max					Bars H 4~#4		Bars K		QUANTITIES Per foot of Barrel		Curb		Total	
													Bar C		Bar D																															
	S	H	T	U	No.	Size	Spa	Length	Wt	No.	Size	Spa	Length	Wt	Length	Wt	No.	Size	Spa	Length	Wt	No.	Spa	Length	Wt	No.	Length	Wt	No.	Length	Wt	No.	Bar Y Length	Bar Y Wt	Bar Z Length	Bar Z Wt	Length	Weight	No.	Weight	Conc (CY)	Reinf (Lb)	Conc (CY)	Reinf (Lb)	Conc (CY)	Reinf (Lb)
2	6'-0"	3'-0"	7"	7"	162	#5	6"	13'- 6"	2,281	162	#4	6"	8'-11"	965	7'- 8"	830	194	#5	5"	6'- 0"	1,214	16	9"	39'-9"	425	50	39'-9"	1,328	56	3'- 0"	112	41	4'- 6"	123	7'- 0"	192	13'- 6"	36	30	85	0.789	186.8	1.0	121	32.6	7,591
3	6'-0"	3'-0"	7"	7"	162	#5	6"	20'- 1"	3,393	162	#4	6"	8'-11"	965	7'- 8"	830	194	#5	5"	12'- 7"	2,546	24	9"	39'-9"	637	71	39'-9"	1,885	56	3'- 0"	112	82	4'- 6"	246	7'- 0"	383	20'- 1"	54	42	119	1.138	274.9	1.5	173	47.0	11,170
4	6'-0"	3'-0"	7"	7"	162	#5	6"	26'- 8"	4,506	162	#4	6"	8'-11"	965	7'- 8"	830	194	#5	5"	19'- 2"	3,878	32	9"	39'-9"	850	92	39'-9"	2,443	56	3'- 0"	112	123	4'- 6"	370	7'- 0"	575	26'- 8"	71	56	159	1.487	363.2	2.0	230	61.5	14,759
5	6'-0"	3'-0"	7"	7"	162	#5	6"	33'- 3"	5,618	162	#4	6"	8'-11"	965	7'- 8"	830	194	#5	5"	25'- 9"	5,210	40	9"	39'-9"	1,062	113	39'-9"	3,000	56	3'- 0"	112	164	4'- 6"	493	7'- 0"	767	33'- 3"	89	70	199	1.836	451.4	2.5	288	75.9	18,345
6	6'-0"	3'-0"	7"	7"	162	#5	6"	39'-10"	6,730	162	#4	6"	8'-11"	965	7'- 8"	830	194	#5	5"	32'- 4"	6,542	48	9"	39'-9"	1,275	134	39'-9"	3,558	56	3'- 0"	112	205	4'- 6"	616	7'- 0"	959	39'-10"	106	82	233	2.186	539.7	3.0	339	90.4	21,926
2	6'-0"	4'-0"	7"	7"	162	#5	6"	13'- 6"	2,281	162	#4	6"	9'-11"	1,073	7'- 8"	830	194	#5	5"	6'- 0"	1,214	16	9"	39'-9"	425	50	39'-9"	1,328	56	4'- 0"	150	41	4'- 6"	123	9'- 0"	246	13'- 6"	36	30	85	0.853	191.8	1.0	121	35.1	7,791
3	6'-0"	4'-0"	7"	7"	162	#5	6"	20'- 1"	3,393	162	#4	6"	9'-11"	1,073	7'- 8"	830	194	#5	5"	12'- 7"	2,546	24	9"	39'-9"	637	71	39'-9"	1,885	56	4'- 0"	150	82	4'- 6"	246	9'- 0"	493	20'- 1"	54	42	119	1.224	281.3	1.5	173	50.5	11,426
4	6'-0"	4'-0"	7"	7"	162	#5	6"	26'- 8"	4,506	162	#4	6"	9'-11"	1,073	7'- 8"	830	194	#5	5"	19'- 2"	3,878	32	9"	39'-9"	850	92	39'-9"	2,443	56	4'- 0"	150	123	4'- 6"	370	9'- 0"	739	26'- 8"	71	56	159	1.595	371.0	2.0	230	65.8	15,069
5	6'-0"	4'-0"	7"	7"	162	#5	6"	33'- 3"	5,618	162	#4	6"	9'-11"	1,073	7'- 8"	830	194	#5	5"	25'- 9"	5,210	40	9"	39'-9"	1,062	113	39'-9"	3,000	56	4'- 0"	150	164	4'- 6"	493	9'- 0"	986	33'- 3"	89	70	199	1.966	460.6	2.5	288	81.1	18,710
6	6'-0"	4'-0"	7"	7"	162	#5	6"	39'-10"	6,730	162	#4	6"	9'-11"	1,073	7'- 8"	830	194	#5	5"	32'- 4"	6,542	48	9"	39'-9"	1,275	134	39'-9"	3,558	56	4'- 0"	150	205	4'- 6"	616	9'- 0"	1,232	39'-10"	106	82	233	2.337	550.2	3.0	339	96.5	22,345
2	6'-0"	5'-0"	7"	7"	162	#5	6"	13'- 6"	2,281	162	#4	6"	10'-11"	1,181	7'- 8"	830	194	#5	5"	6'- 0"	1,214	16	9"	39'-9"	425	56	39'-9"	1,487	56	5'- 0"	187	41	4'- 6"	123	11'- 0"	301	13'- 6"	36	30	85	0.918	200.7	1.0	121	37.7	8,150
3	6'-0"	5'-0"	7"	7"	162	#5	6"	20'- 1"	3,393	162	#4	6"	10'-11"	1,181	7'- 8"	830	194	#5	5"	12'- 7"	2,546	24	9"	39'-9"	637	79	39'-9"	2,098	56	5'- 0"	187	82	4'- 6"	246	11'- 0"	603	20'- 1"	54	42	119	1.311	293.0	1.5	173	53.9	11,894
4	6'-0"	5'-0"	7"	7"	162	#5	6"	26'- 8"	4,506	162	#4	6"	10'-11"	1,181	7'- 8"	830	194	#5	5"	19'- 2"	3,878	32	9"	39'-9"	850	102	39'-9"	2,708	56	5'- 0"	187	123	4'- 6"	370	11'- 0"	904	26'- 8"	71	56	159	1.703	385.4	2.0	230	70.1	15,644
5	6'-0"	5'-0"	7"	7"	162	#5	6"	33'- 3"	5,618	162	#4	6"	10'-11"	1,181	7'- 8"	830	194	#5	5"	25'- 9"	5,210	40	9"	39'-9"	1,062	125	39'-9"	3,319	56	5'- 0"	187	164	4'- 6"	493	11'- 0"	1,205	33'- 3"	89	70	199	2.096	477.6	2.5	288	86.3	19,393
6	6'-0"	5'-0"	7"	7"	162	#5	6"	39'-10"	6,730	162	#4	6"	10'-11"	1,181	7'- 8"	830	194	#5	5"	32'- 4"	6,542	48	9"	39'-9"	1,275	148	39'-9"	3,930	56	5'- 0"	187	205	4'- 6"	616	11'- 0"	1,506	39'-10"	106	82	233	2.488	569.9	3.0	339	102.5	23,136
2	6'-0"	6'-0"	7"	7"	162	#5	6"	13'- 6"	2,281	194	#4	5"	11'-11"	1,544	7'- 8"	994	194	#5	5"	6'- 0"	1,214	16	9"	39'-9"	425	62	39'-9"	1,646	56	6'- 0"	224	41	4'- 6"	123	13'- 0"	356	13'- 6"	36	30	85	0.983	220.2	1.0	121	40.3	8,928
3	6'-0"	6'-0"	7"	7"	162	#5	6"	20'- 1"	3,393	194	#4	5"	11'-11"	1,544	7'- 8"	994	194	#5	5"	12'- 7"	2,546	24	9"	39'-9"	637	87	39'-9"	2,310	56	6'- 0"	224	82	4'- 6"	246	13'- 0"	712	20'- 1"	54	42	119	1.397	315.2	1.5	173	57.4	12,779
4	6'-0"	6'-0"	7"	7"	162	#5	6"	26'- 8"	4,506	194	#4	5"	11'-11"	1,544	7'- 8"	994	194	#5	5"	19'- 2"	3,878	32	9"	39'-9"	850	112	39'-9"	2,974	56	6'- 0"	224	123	4'- 6"	370	13'- 0"	1,068	26'- 8"	71	56	159	1.811	410.2	2.0	230	74.4	16,638
5	6'-0"	6'-0"	7"	7"	162	#5	6"	33'- 3"	5,618	194	#4	5"	11'-11"	1,544	7'- 8"	994	194	#5	5"	25'- 9"	5,210	40	9"	39'-9"	1,062	137	39'-9"	3,638	56	6'- 0"	224	164	4'- 6"	493	13'- 0"	1,424	33'- 3"	89	70	199	2.225	505.2	2.5	288	91.5	20,495
6	6'-0"	6'-0"	7"	7"	162	#5	6"	39'-10"	6,730	194	#4	5"	11'-11"	1,544	7'- 8"	994	194	#5	5"	32'- 4"	6,542	48	9"	39'-9"	1,275	162	39'-9"	4,302	56	6'- 0"	224	205	4'- 6"	616	13'- 0"	1,780	39'-10"	106	82	233	2.639	600.2	3.0	339	108.6	24,346

Deformed welded wire reinforcement (WWR) meeting the requirements of ASTM A1064 may be used to replace conventional reinforcement shown at the Contractor's option. The area of required reinforcement may be reduced by the ratio of 60 ksi / 70 ksi. Spacing of WWR is limited to 4" Min and 18" Max. When required, provide lap splices in the WWR of the same length required for the equivalent bar size, rounded up for wire sizes between conventional bar sizes.

Example Conversion: Replacement of No. 6 Gr 60 at 6" Spacing with WWR.
WWR required = (0.44 sq in/ 0.5') x (60 ksi/70 ksi) = 0.754 sq in/ft.
If D30.6 wire is used to meet the 0.754 sq in/ft requirement in this example, the required spacing = (0.306 sq in/ 0.754 sq in/ft) x 12 in/ft = 4.87" Max spacing.
Required lap length for the provided D30.6 wire is 2'-2" (Lap required for uncoated No. 5 bars, as shown in Item 440).

DISCLAIMER:
The use of this standard is governed by the "Texas Engineering Practice Act". No warranty of any kind is made by TxDOT for any purpose whatsoever. TxDOT assumes no responsibility for the conversion of this standard to other formats or for incorrect results or damages resulting from its use.

HL93 LOADING

Texas Department of Transportation — Bridge Division Standard

MULTIPLE BOX CULVERTS CAST-IN-PLACE
6'-0" SPAN
0' TO 16' FILL

MC-6-16

FILE: mc616ste.dgn	DN: GAF	CK: LMW	DW: BWH/TxDOT	CK: GAF
©TxDOT February 2010	CONT	SECT	JOB	HIGHWAY
REVISIONS				
10-12: Added WWR	DIST	COUNTY		SHEET NO.

DATE:
FILE:

DISCLAIMER:
The use of this standard is governed by the "Texas Engineering Practice Act". No warranty of any kind is made by TxDOT for any purpose whatsoever. TxDOT assumes no responsibility for the conversion of this standard to other formats or for incorrect results or damages resulting from its use.

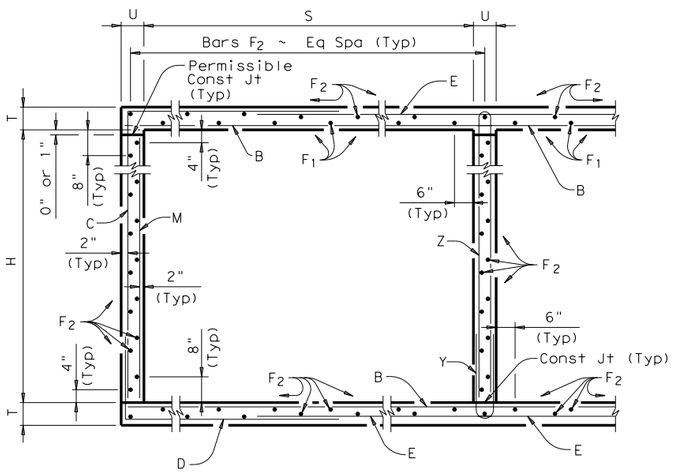

TYPICAL SECTION

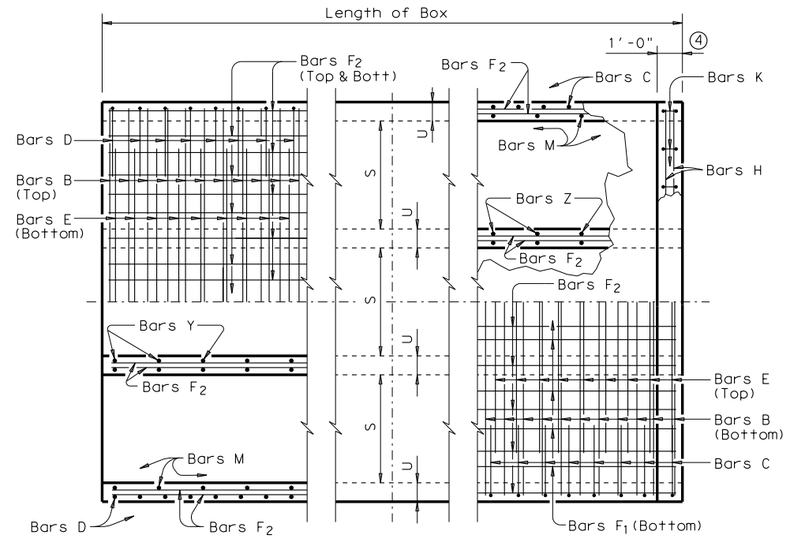

BOTTOM SLAB

TOP SLAB

PART PLANS

1. 0" min to 5'-0" max. Estimated curb heights are shown elsewhere in the plans. For structures with pedestrian rail, bicycle rail or curbs taller than 1'-0", refer to ECD standard. For structures with T6 bridge rail, refer to T6-CM standard. For structures with traffic rail, other than T6, refer to RAC standard.

2. For vehicle safety, the following requirements must be met:
   - For structures without bridge rail, curbs shall project no more than 3" above finished grade.
   - For structures with bridge rail, curbs shall be flush with finished grade.
   Curb heights shall be reduced, if necessary, to meet the above requirements. No changes will be made in quantities and no additional compensation will be allowed for this work.

3. For curbs less than 1'-0" high, tilt bars K or reduce bar height as necessary to maintain cover. For curbs less than 3" high, bars K may be omitted.

4. 1'-0" typical. 2'-0" when RAC standard is referred to elsewhere in the plans.

Deformed welded wire reinforcement (WWR) meeting the requirements of ASTM A1064 may be used to replace conventional reinforcement shown at the Contractor's option. The area of required reinforcement may be reduced by the ratio of 60 ksi / 70 ksi. Spacing of WWR is limited to 4" Min and 18" Max. When required, provide lap splices in the WWR of the same length required for the equivalent bar size, rounded up for wire sizes between conventional bar sizes.

Example Conversion: Replacement of No. 6 Gr 60 at 6" Spacing with WWR.
WWR required = (0.44 sq in/ 0.5') x (60 ksi/70 ksi) = 0.754 sq in/ft.
If D30.6 wire is used to meet the 0.754 sq in/ft requirement in this example, the required spacing = (0.306 sq in/ 0.754 sq in/ft) x 12 in/ft = 4.87" Max spacing.
Required lap length for the provided D30.6 wire is 2'-2" (Lap required for uncoated No. 5 bars, as shown in Item 440).

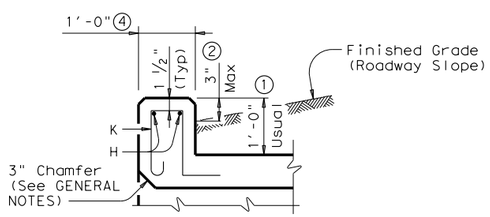

SECTION THRU CURB

H	Bar Dimensions	
	"X"	"Y"
2'-0"	2'-5"	2'-2"
3'-0"	3'-5"	2'-2"
4'-0"	4'-5"	2'-2"
5'-0"	5'-5"	2'-2"

GENERAL NOTES:

Designed according to AASHTO LRFD Specifications.
Designed to the maximum fill height shown.
All reinforcing steel shall be Grade 60.
All concrete shall be Class "C" with these exceptions: use Class "S" for top slabs of culverts with overlay, with 1-to-2 course surface treatment, or with the top slab as the final riding surface.
Class "C" concrete shall have a minimum compressive strength of 3,600 psi. Class "S" concrete shall have a minimum compressive strength of 4,000 psi.
The use of permanent forms is not allowed.
The bottom edge of the top slab shall be chamfered 3" at the entrance.
Reinforcing bars shall be adjusted to provide a minimum of 1 1/4" clear cover.
Construction joints shown at the flow line may be raised a maximum of 6" at the Contractor's option. If this option is used, Bars M may be cut off or raised, Bars C and D may be reversed, and Bars Y and Z may be reversed.
See standard MC-MD for skewed ends, angle sections and lengthening details.

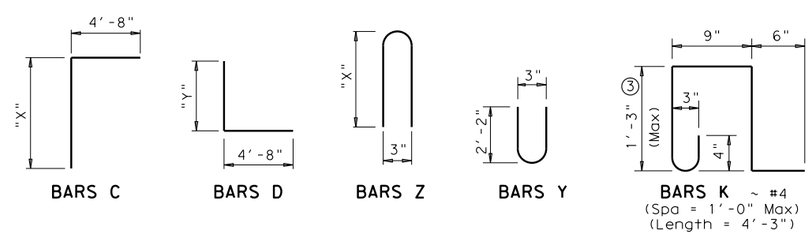

HL93 LOADING

SHEET 1 OF 2

Texas Department of Transportation

Bridge Division Standard

MULTIPLE BOX CULVERTS CAST-IN-PLACE

5'-0" SPAN

0' TO 20' FILL

MC-5-20

FILE: mc520ste.dgn	DN: GAF	CK: LMW	DW: BWH/TxDOT	CK: GAF
©TxDOT February 2010	CONT	SECT	JOB	HIGHWAY
REVISIONS				
10-12: Added WWR	DIST	COUNTY		SHEET NO.

DATE:
FILE:

BILLS OF REINFORCING STEEL (For Box Length = 40 feet)

NUMBER OF SPANS	SECTION DIMENSIONS				Bars B					Bars C & D							Bars E					Bars F_1 ~#4				Bars F_2 ~#4 at 1'-6" Max			Bars M~#4 at 1'-6" Max			Bars Y & Z~#4 at 1'-0" Max					Bars H 4~#4		Bars K		QUANTITIES Per foot of Barrel		Curb		Total	
													Bar C		Bar D																															
	S	H	T	U	No.	Size	Spa	Length	Wt	No.	Size	Spa	Length	Wt	Length	Wt	No.	Size	Spa	Length	Wt	No.	Spa	Length	Wt	No.	Length	Wt	No.	Length	Wt	No.	Bar Y Length	Bar Y Wt	Bar Z Length	Bar Z Wt	Length	Weight	No.	Weight	Conc (CY)	Reinf (Lb)	Conc (CY)	Reinf (Lb)	Conc (CY)	Reinf (Lb)
2	5'-0"	2'-0"	7"	7"	194	#4	5"	11'- 6"	1,490	162	#4	6"	7'- 1"	767	6'-10"	739	162	#5	6"	5'- 8"	957	14	8"	39'-9"	372	38	39'-9"	1,009	56	2'- 0"	75	41	4'- 6"	123	5'- 0"	137	11'- 6"	31	26	74	0.637	141.7	0.9	105	26.4	5,774
3	5'-0"	2'-0"	7"	7"	194	#4	5"	17'- 1"	2,214	162	#4	6"	7'- 1"	767	6'-10"	739	162	#5	6"	11'- 3"	1,901	21	8"	39'-9"	558	54	39'-9"	1,434	56	2'- 0"	75	82	4'- 6"	246	5'- 0"	274	17'- 1"	46	36	102	0.922	205.2	1.3	148	38.2	8,356
4	5'-0"	2'-0"	7"	7"	194	#4	5"	22'- 8"	2,937	162	#4	6"	7'- 1"	767	6'-10"	739	162	#5	6"	16'-10"	2,844	28	8"	39'-9"	743	70	39'-9"	1,859	56	2'- 0"	75	123	4'- 6"	370	5'- 0"	411	22'- 8"	61	48	136	1.206	268.6	1.7	197	49.9	10,942
5	5'-0"	2'-0"	7"	7"	194	#4	5"	28'- 3"	3,661	162	#4	6"	7'- 1"	767	6'-10"	739	162	#5	6"	22'- 5"	3,788	35	8"	39'-9"	929	86	39'-9"	2,284	56	2'- 0"	75	164	4'- 6"	493	5'- 0"	548	28'- 3"	75	60	170	1.491	332.1	2.1	245	61.7	13,529
6	5'-0"	2'-0"	7"	7"	194	#4	5"	33'-10"	4,385	162	#4	6"	7'- 1"	767	6'-10"	739	162	#5	6"	28'- 0"	4,731	42	8"	39'-9"	1,115	102	39'-9"	2,708	56	2'- 0"	75	205	4'- 6"	616	5'- 0"	685	33'-10"	90	70	199	1.775	395.5	2.5	289	73.5	16,110
2	5'-0"	3'-0"	7"	7"	194	#4	5"	11'- 6"	1,490	138	#4	7"	8'- 1"	745	6'-10"	630	162	#5	6"	5'- 8"	957	14	8"	39'-9"	372	44	39'-9"	1,168	56	3'- 0"	112	41	4'- 6"	123	7'- 0"	192	11'- 6"	31	26	74	0.702	144.7	0.9	105	29.0	5,894
3	5'-0"	3'-0"	7"	7"	194	#4	5"	17'- 1"	2,214	138	#4	7"	8'- 1"	745	6'-10"	630	162	#5	6"	11'- 3"	1,901	21	8"	39'-9"	558	62	39'-9"	1,646	56	3'- 0"	112	82	4'- 6"	246	7'- 0"	383	17'- 1"	46	36	102	1.008	210.9	1.3	148	41.6	8,583
4	5'-0"	3'-0"	7"	7"	194	#4	5"	22'- 8"	2,937	138	#4	7"	8'- 1"	745	6'-10"	630	162	#5	6"	16'-10"	2,844	28	8"	39'-9"	743	80	39'-9"	2,124	56	3'- 0"	112	123	4'- 6"	370	7'- 0"	575	22'- 8"	61	48	136	1.314	277.0	1.7	197	54.3	11,277
5	5'-0"	3'-0"	7"	7"	194	#4	5"	28'- 3"	3,661	138	#4	7"	8'- 1"	745	6'-10"	630	162	#5	6"	22'- 5"	3,788	35	8"	39'-9"	929	98	39'-9"	2,602	56	3'- 0"	112	164	4'- 6"	493	7'- 0"	767	28'- 3"	75	60	170	1.620	343.2	2.1	245	66.9	13,972
6	5'-0"	3'-0"	7"	7"	194	#4	5"	33'-10"	4,385	138	#4	7"	8'- 1"	745	6'-10"	630	162	#5	6"	28'- 0"	4,731	42	8"	39'-9"	1,115	116	39'-9"	3,080	56	3'- 0"	112	205	4'- 6"	616	7'- 0"	959	33'-10"	90	70	199	1.926	409.3	2.5	289	79.5	16,662
2	5'-0"	4'-0"	7"	7"	194	#4	5"	11'- 6"	1,490	138	#4	7"	9'- 1"	837	6'-10"	630	162	#5	6"	5'- 8"	957	14	8"	39'-9"	372	44	39'-9"	1,168	56	4'- 0"	150	41	4'- 6"	123	9'- 0"	246	11'- 6"	31	26	74	0.767	149.3	0.9	105	31.6	6,078
3	5'-0"	4'-0"	7"	7"	194	#4	5"	17'- 1"	2,214	138	#4	7"	9'- 1"	837	6'-10"	630	162	#5	6"	11'- 3"	1,901	21	8"	39'-9"	558	62	39'-9"	1,646	56	4'- 0"	150	82	4'- 6"	246	9'- 0"	493	17'- 1"	46	36	102	1.095	216.9	1.3	148	45.1	8,823
4	5'-0"	4'-0"	7"	7"	194	#4	5"	22'- 8"	2,937	138	#4	7"	9'- 1"	837	6'-10"	630	162	#5	6"	16'-10"	2,844	28	8"	39'-9"	743	80	39'-9"	2,124	56	4'- 0"	150	123	4'- 6"	370	9'- 0"	739	22'- 8"	61	48	136	1.422	284.4	1.7	197	58.6	11,571
5	5'-0"	4'-0"	7"	7"	194	#4	5"	28'- 3"	3,661	138	#4	7"	9'- 1"	837	6'-10"	630	162	#5	6"	22'- 5"	3,788	35	8"	39'-9"	929	98	39'-9"	2,602	56	4'- 0"	150	164	4'- 6"	493	9'- 0"	986	28'- 3"	75	60	170	1.750	351.9	2.1	245	72.1	14,321
6	5'-0"	4'-0"	7"	7"	194	#4	5"	33'-10"	4,385	138	#4	7"	9'- 1"	837	6'-10"	630	162	#5	6"	28'- 0"	4,731	42	8"	39'-9"	1,115	116	39'-9"	3,080	56	4'- 0"	150	205	4'- 6"	616	9'- 0"	1,232	33'-10"	90	70	199	2.078	419.4	2.5	289	85.6	17,065
2	5'-0"	5'-0"	7"	7"	194	#4	5"	11'- 6"	1,490	138	#4	7"	10'- 1"	930	6'-10"	630	162	#5	6"	5'- 8"	957	14	8"	39'-9"	372	50	39'-9"	1,328	56	5'- 0"	187	41	4'- 6"	123	11'- 0"	301	11'- 6"	31	26	74	0.832	158.0	0.9	105	34.2	6,423
3	5'-0"	5'-0"	7"	7"	194	#4	5"	17'- 1"	2,214	138	#4	7"	10'- 1"	930	6'-10"	630	162	#5	6"	11'- 3"	1,901	21	8"	39'-9"	558	70	39'-9"	1,859	56	5'- 0"	187	82	4'- 6"	246	11'- 0"	603	17'- 1"	46	36	102	1.181	228.2	1.3	148	48.5	9,276
4	5'-0"	5'-0"	7"	7"	194	#4	5"	22'- 8"	2,937	138	#4	7"	10'- 1"	930	6'-10"	630	162	#5	6"	16'-10"	2,844	28	8"	39'-9"	743	90	39'-9"	2,390	56	5'- 0"	187	123	4'- 6"	370	11'- 0"	904	22'- 8"	61	48	136	1.530	298.4	1.7	197	62.9	12,132
5	5'-0"	5'-0"	7"	7"	194	#4	5"	28'- 3"	3,661	138	#4	7"	10'- 1"	930	6'-10"	630	162	#5	6"	22'- 5"	3,788	35	8"	39'-9"	929	110	39'-9"	2,921	56	5'- 0"	187	164	4'- 6"	493	11'- 0"	1,205	28'- 3"	75	60	170	1.880	368.6	2.1	245	77.3	14,989
6	5'-0"	5'-0"	7"	7"	194	#4	5"	33'-10"	4,385	138	#4	7"	10'- 1"	930	6'-10"	630	162	#5	6"	28'- 0"	4,731	42	8"	39'-9"	1,115	130	39'-9"	3,452	56	5'- 0"	187	205	4'- 6"	616	11'- 0"	1,506	33'-10"	90	70	199	2.229	438.8	2.5	289	91.7	17,841

Deformed welded wire reinforcement (WWR) meeting the requirements of ASTM A1064 may be used to replace conventional reinforcement shown at the Contractor's option. The area of required reinforcement may be reduced by the ratio of 60 ksi / 70 ksi. Spacing of WWR is limited to 4" Min and 18" Max. When required, provide lap splices in the WWR of the same length required for the equivalent bar size, rounded up for wire sizes between conventional bar sizes.

Example Conversion: Replacement of No. 6 Gr 60 at 6" Spacing with WWR.
WWR required = (0.44 sq in/ 0.5') x (60 ksi/70 ksi) = 0.754 sq in/ft.
If D30.6 wire is used to meet the 0.754 sq in/ft requirement in this example, the required spacing = (0.306 sq in/ 0.754 sq in/ft) x 12 in/ft = 4.87" Max spacing.
Required lap length for the provided D30.6 wire is 2'-2" (Lap required for uncoated No. 5 bars, as shown in Item 440).

DISCLAIMER:
The use of this standard is governed by the "Texas Engineering Practice Act". No warranty of any kind is made by TxDOT for any purpose whatsoever. TxDOT assumes no responsibility for the conversion of this standard to other formats or for incorrect results or damages resulting from its use.

HL93 LOADING

Texas Department of Transportation — Bridge Division Standard

MULTIPLE BOX CULVERTS CAST-IN-PLACE
5'-0" SPAN
0' TO 20' FILL

MC-5-20

FILE: mc520ste.dgn	DN: GAF	CK: LMW	DW: BWH/TxDOT	CK: GAF
©TxDOT February 2010	CONT	SECT	JOB	HIGHWAY
REVISIONS				
10-12: Added WWR	DIST	COUNTY		SHEET NO.

DATE:
FILE: