CITY OF CELINA
ENGINEERING DEPARTMENT
RELEASED FOR CONSTRUCTION

DATE _____ BY _____

PRIOR TO CONSTRUCTION, THE OWNER OR THEIR REPRESENTATIVE SHALL NOTIFY THE CITY OF CELINA ENGINEERING DEPARTMENT AT 972-382-2682 x1081. CONSTRUCTION DRAWINGS STAMPED BY THE CITY OF CELINA SHALL BE ON THE PROJECT SITE AT ALL TIMES DURING CONSTRUCTION. THE CITY OF CELINA STANDARD SPECIFICATIONS FOR CONSTRUCTION SHALL TAKE PRECEDENCE OVER THESE PLANS WHENEVER IN CONFLICT THEREWITH. DISCLAIMER: ALL NECESSARY APPROVALS AND PERMITS SHALL BE ACQUIRED PRIOR TO CONSTRUCTION.

O'Reilly AUTO PARTS

New O'Reilly Auto Parts Store
S.H. No. 289 (Preston Rd) & E. Ash Street
Celina, Texas

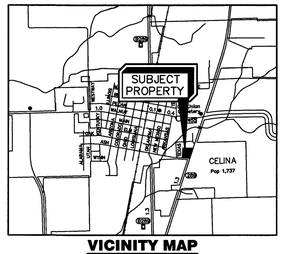

VICINITY MAP
SCALE: NTS

OWNER OR TENANT

O'Reilly AUTO PARTS

O'REILLY AUTO ENTERPRISES, LLC
(FORMERLY KNOWN AS O'REILLY AUTOMOTIVE, INC.)
CORPORATE OFFICES
233 SOUTH PATTERSON
SPRINGFIELD, MISSOURI 65802
417-862-2674 PHONE

ARCHITECT

Buddy D. Webb
Architect - Consultant
1501 East Sunshine - Suite E (417) 877-1385
Springfield, Missouri 65804 (417) 877-9736 (FAX)

CIVIL ENGINEER

MO ANDERSON ENGINEERING, INC.
ENGINEERS • SURVEYORS • LABORATORIES • DRILLING
2045 W. WOODLAND SPRINGFIELD, MISSOURI 65807 PHONE (417) 866-2741

GENERAL NOTES

A. CONTRACT ADMINISTRATION (LIMITED SERVICE): THE ARCHITECT AND/OR ENGINEER OF RECORD INDICATED HEREIN ARE PROVIDING A LIMITED SERVICE AND NOT PROVIDING CONTRACT ADMINISTRATION SERVICES FOR THIS PROJECT WHICH IS THE RESPONSIBILITY OF OTHERS. THE ARCHITECT AND/OR ENGINEER ARE NOT RESPONSIBLE FOR FIELD ACTIVITIES ON THIS PROJECT WITHOUT DIRECT INSPECTION OF THE WORK IN PROGRESS. IF FIELD CONDITIONS ARE UNCOVERED THAT REQUIRE A CHANGE OR ADDITIONAL INFORMATION, THE ARCHITECT AND/OR ENGINEER DOES NOT DELEGATE AUTHORITY TO ANYONE ELSE FOR DETERMINING THE MEANING OF PLANS OR SPECIFICATIONS AS AUTHENTICATED HEREIN.

B. QUALITY STANDARDS AND BUILDING CODES: CONTRACTORS SHALL BE RESPONSIBLE FOR KNOWING THE QUALITY AND PUBLIC SAFETY REGULATIONS SET FORTH IN THE GOVERNING CODES AND OTHER APPLICABLE REGULATIONS OF LOCAL AND STATE AGENCIES HAVING JURISDICTION WHICH GOVERN EACH CONTRACTOR'S WORK.

C. EXISTING CONDITIONS: FIELD VERIFY EXISTING CONDITIONS BY DETAILED INSPECTION PRIOR TO SUBMITTING BID AND BEGINNING WORK. NOTIFY THE ARCHITECT AND/OR ENGINEER OF RECORD IF EXISTING CONDITIONS DEVIATE SUBSTANTIALLY FROM THOSE INDICATED HEREIN.

SHEET INDEX

SHEET NUMBER	SHEET NAME
1	COVER SHEET
2	CITY GENERAL NOTES
3	PLAT
4	SITE PLAN
5	DIMENSION CONTROL PLAN
6	DEMOLITION PLAN
7	SITE GRADING PLAN
8	EROSION CONTROL PLAN
9	DRAINAGE AREA MAP & CALCULATIONS
10	WATER PLAN
11	SITE UTILITY PLAN
12	SITE DETAILS
13	CITY STANDARD DETAILS
14	CITY STANDARD DETAILS (CONT'D)

ZONING CODE

ZONING CLASSIFICATION:	"C-1", RETAIL DISTRICT "PRO", PRESTON ROAD OVERLAY DISTRICT
PROPERTY AREA:	1.06± ACRES
PARKING SUMMARY:	SEE SHEET 4

SYMBOLS LEGEND

XX DETAIL NUMBER / XX SHEET NUMBER	DETAIL MARK
----723----	EXISTING 1-FOOT GRADE LINES
——723——	PROPOSED 1-FOOT GRADE LINES
	NEW BUILDING CONSTRUCTION
	MONUMENT SIGN LOCATION
	TEMPORARY EROSION CONTROL FENCE
	DRAINAGE SWALE
	DRAINAGE FLOW ARROW
+ 723.5 PVT	NEW SPOT ELEVATIONS LIST / ABBREVIATION GRADE — NONE SIDEWALK — SW TOP OF WALL — TW TOP OF CURB — TC TOP OF PAVEMENT — PVT NEW GRADE — GD CONCRETE — CONC EXISTING TOP OF CURB — ETC EXISTING GRADE — EGD EXISTING PAVEMENT — EPVT EXISTING SIDEWALK — ESW FLOW LINE — FL TOP OF BERM — TOP
	BENCHMARK: "TXMK" - A SMARTNET NORTH AMERICA CONTINUOUSLY OPERATING REFERENCE STATION - AN EPOXIED STAINLESS ASSEMBLY LOCATED IN THE TOP OF A MASONRY WALL AT POGUE ENGINEERING AND DEVELOPMENT COMPANY, LOCATED AT 1512 BRAY CENTRAL DRIVE, SUITE 100, MCKINNEY, TEXAS ELEVATION: 664.60 (NAVD88, CORS ADJ.)
	TEMPORARY BENCHMARK: LOCATION:"X" IN CONCRETE ON THE TOP OF A STORM INLET INLET ON THE WEST SIDE OF STATE HIGHWAY 289 (PRESTON ROAD) APPROXIMATELY 100' NORTH OF THE THE INTERSECTION WITH EAST ASH STRET. ELEVATION: 728.63

RECORD DRAWINGS

THESE RECORD DRAWINGS HAVE BEEN PREPARED BASED ON INFORMATION PROVIDED BY OTHERS. ANDERSON ENGINEERING, INC. HAS NOT VERIFIED THE ACCURACY AND/OR COMPLETENESS OF THIS INFORMATION. UNLESS OTHERWISE NOTED ON THESE DOCUMENTS, ANDERSON ENGINEERING, INC. SHALL NOT BE RESPONSIBLE FOR ANY ERRORS OR OMISSIONS THAT MAY BE INCORPORATED AS A RESULT OF ERRONEOUS INFORMATION PROVIDED BY OTHERS.

ANDERSON ENGINEERING, INC.
BY: _____
DATE: 11-14-15

STATE OF TEXAS
NEIL S. BRADY
88145
LICENSED PROFESSIONAL ENGINEER
10-27-14

SHEETS BEARING THIS SEAL ARE AUTHENTICATED. RESPONSIBILITY FOR ALL OTHER PLANS, SPECIFICATIONS OR INSTRUMENTS ARE DISCLAIMED.

O'Reilly AUTO PARTS
CORPORATE OFFICES
233 SOUTH PATTERSON
SPRINGFIELD, MISSOURI 65802
(417) 862-2674 TELEPHONE

PROJECT:
NEW O'REILLY AUTO PARTS STORE
S.H. 289 (PRESTON ROAD) & E. ASH STREET
CELINA, TEXAS

COVER SHEET

MO ANDERSON ENGINEERING, INC
ENGINEERS • SURVEYORS • LABORATORIES • DRILLING
2045 W. WOODLAND • SPRINGFIELD, MISSOURI 65807 • PHONE (417) 866-2741
ANDERSON COA# F-3704 • NEIL S BRADY, PE# 88145

PROJ #	DRAWING #	BY: ATH
10178-14	WB-110-061	CKD:NSB

DRAWN BY: AH
CHECKED BY: NB
DATE: 10/27/14
REVISION:
PROJECT NUMBER: CEA
SHEET NUMBER 1 of 14

P-201406-01

© COPYRIGHT 2014 – DESIGNS, DRAWINGS AND SPECIFICATIONS ARE INSTRUMENTS OF SERVICE AND ARE THE PROPERTY OF THE DESIGN PROFESSIONAL. REPRODUCTION PROHIBITED WITHOUT THE EXPRESSED WRITTEN CONSENT OF THE DESIGN PROFESSIONAL.

City of Celina

CONSTRUCTION GENERAL NOTES - Revised 8/12/2013

GENERAL

1. All construction shall be in accordance with the latest revision of the North Central Texas Council of Governments "Standard Specifications for Public Works Construction" including the Standard Drawings therein and the City of Celina's addendum thereto. Contractor shall have at least one set of approved Engineering Plans and Specifications on-site at all times.

2. Before beginning construction, the contractor shall prepare a construction sequence schedule. The construction schedule shall be such that there is minimum interference with traffic along or adjacent to the project.

3. Construction may not begin earlier than 7:00 A.M. on weekdays nor continue after dark without permission from the City of Celina. Construction on holidays and Saturday must be approved two days in advance. A fee of $300.00 a day for working on holidays and Saturday will be accessed payable to the city before work is performed. Work may not begin before 8:00 A.M. on holidays and Saturday and work on Sunday is prohibited without special permission and payment of fees.

4. Utilities shown on the plans were taken from field surveys and information provided by the utility companies. The completeness and the accuracy of this data is not guaranteed. The contractor is responsible for verifying the location of all underground utilities and structures and protecting them from damage during construction. It will be the responsibility of each contractor to protect all existing public and private utilities throughout the construction of this project. Contractor shall contact the appropriate utility companies for line location prior to commencement of construction and shall assume full liability to those companies for any damages caused to their facilities.

DIG TESS	800-DIG-TESS
GCEC-TELECOM	903-482-7274
GCEC-ELECTRIC	903-821-3007
AT&T	972-569-3013
ATMOS ENERGY	972-881-4161
ATMOS ENERGY	214-341-9900
CROSSTEX ENERGY	817-570-6753
ONEOK	903-257-6594
COSERV-ELEC	940-321-7800
COSERV-GAS	940-321-7800
CITY OF CELINA	972-382-2682
TOWN OF PROSPER	972-347-9969
MARILEE SUD	972-382-3222
GRANDE	972-410-0583
SUDDEN LINK	469-853-0486

5. Work may not be backfilled or covered until the City has inspected it.

6. Material testing shall be performed by an independent testing laboratory and paid for by the Contractor. The following material tests shall be provided by the Contractor:

   a. Embankment - One soil density test shall be performed at each location for each 500 C.Y. of backfill placed.

   b. Pavement Sub grade - One gradation test (where lime stabilized) and one soil density test shall be performed for each 300 linear feet of pavement unless otherwise noted. Gradations must pass 100% through a 1¾" sieve and 60% through a #4 sieve.

   c. Utility Trench Backfill - One soil density test shall be performed at 300 feet intervals or as directed by the Inspector.

   d. Concrete Tests:

      1) Compressive Strength - Four test cylinders shall be taken from a representative portion of the concrete being placed for every 150-cubic yards of concrete pavement placed, but in no case shall less than 2 sets of cylinders be taken from any one day's placement.)

      2) Air, slump, and temperature tests shall be taken for every set of cylinders made. Concrete with a temperature above 95° F will be rejected.

      3) Additional cylinders and/or tests may be required at the Inspector's discretion.

   e. The City shall select the location and depth of each soil density test unless otherwise directed.

7. All excavation on the project is unclassified.

8. Temporary erosion control shall be used to minimize the spread of silt and mud from the project on to existing streets, alleys, drainage ways and public and private property. Temporary erosion controls may include silt fences, rock check dams, stabilized construction entrances, straw bales, berms, dikes, swales, strips of undisturbed vegetation, check dams and other methods as required by the City Manager or his representative and shall conform to the Storm Water Quality Best Management Practices for Construction Activities as published by the North Central Texas Council of Governments and the City of Celina Erosion and Sediment Control Manual.

9. Finished slopes on public rights-of-way and easements shall not be steeper than 4:1. All slopes steeper than 6:1 shall be covered with erosion control matting and are hydro mulched and maintained by the contractor until grass covers all parts of the slope.

10. The contractor shall maintain two-way traffic at all times along the project.

11. Remove, salvage and replace all street and traffic control signs, which may be damaged by the construction of the project.

12. All trenching and excavation shall be performed in accordance with OSHA standards. Trench safety design will be the responsibility of the Contractor. Contractor shall submit a trench safety design approved by a professional engineer to the City for review prior to the start of any underground utility construction.

PAVING

1. All embankments shall be compacted to 95% Standard Proctor density.

2. All streets and alleys shall be placed on lime stabilized sub grade with a lime content of not less than 7% or as approved by city engineer.

3. The minimum 28 day compressive strength of concrete street paving shall not be less than 3600 psi and shall be air entrained. Water may not be applied to the surface of concrete paving to improve workability.

4. All curb and gutter shall be integral with the pavement.

5. Parabolic crowns are required on all street pavements except on major thoroughfares where straight sections are required.

6. Streets and alleys shall be constructed with provisions for sidewalk ramps at all intersections.

DRAINAGE

1. Storm sewer pipe shall be reinforced concrete, Class III unless otherwise noted.

2. All structural concrete shall be Class "C" (3600 psi compressive strength at 28 days), air entrained.

3. The contractor shall install plugs in storm sewer lines or otherwise prevent mud from entering the storm sewer system during construction.

WATER AND SANITARY SEWER

1. Water mains shall be AWWA C-900 or 905 PVC Class 200 unless otherwise noted. Minimum cover for waterlines is 48" below top of curb, 60" where no curbed street is present or as required to clear existing utilities, whichever is greater. Class B+ embedment unless otherwise noted.

2. All utility trench backfill shall be performed in 12" loose lifts and mechanically compacted with approved vibratory methods.

3. Marking tape shall be installed one foot above and over PVC water lines.

4. Fittings for PVC water lines shall be ductile iron and be encased in a polyethylene sheath.

5. All Mechanical Joints will be restrained. (Mega-Lug etc.)

6. Valves, including tapping valves shall be resilient seat gate valves, unless noted otherwise.

7. All direct burial valves shall be provided with cast iron valve boxes with PVC stacks. Valve stacks shall be vertical and concentric with the valve stem. Stainless steel valve extensions are required on all valves where the operating nut is greater than 4 feet below finished grade.

8. Fire hydrants shall be Waterous or equal as directed or approved by the City of Celina on a case by case basis and field painted silver with bonnet and caps color-coded to pipe size.

   a. Six inch line- silver body with RED bonnet and caps.

   b. Eight inch line- silver body with BLUE bonnet and caps.

   c. Ten inch line- silver body with GREEN bonnet and caps.

   d. Twelve inch and larger- silver body with YELLOW bonnet and caps.

9. All exposed bolting on any buried equipment or material shall be stainless steel. Included are:

   a. Bonnet and stuffing box bolts on valves.

   b. Shoe bolts on fire hydrants.

   c. Flange bolts.

   d. "Cor-ten" mechanical joint "T" bolts are acceptable for direct burial service.

10. Depending on meter size; meter boxes shall be DFW37C-12-1SAF, DFW38C-14-1SAF, DFW65C-14-1SAF, or approved equal, and shall incorporate the Celina logo in the lid.

11. One sample station shall be provided to the city for every 250 connections.

12. Sanitary sewer mains shall be DR 35 PVC. Embedment shall be Class H unless otherwise noted.

13. The contractor shall install and maintain watertight plugs in all connections to the City's sanitary sewer system until the City accepts the project.

14. All sanitary sewer lines and manholes shall be leak tested before the project is accepted.

15. Deflection testing of PVC sewer lines is required. Deflection shall be tested with a mandrel for 5% deflection.

16. All sewer lines shall be video inspected with a copy of the video and station report submitted to the Inspector.

17. Mandrel, Air Test, and Video inspection shall not be performed until all utilities are complete, in place, and backfilled.

18. Specifications are not meant to exclude any other manufacturer. Any specification may be replaced with an approved equal upon approval by the City of Celina.

RECORD DRAWINGS

THESE RECORD DRAWINGS HAVE BEEN PREPARED BASED ON INFORMATION PROVIDED BY OTHERS. ANDERSON ENGINEERING, INC. HAS NOT VERIFIED THE ACCURACY AND/OR COMPLETENESS OF THIS INFORMATION. UNLESS OTHERWISE NOTED ON THESE DOCUMENTS, ANDERSON ENGINEERING, INC. SHALL NOT BE RESPONSIBLE FOR ANY ERRORS OR OMISSIONS THAT MAY BE INCORPORATED AS A RESULT OF ERRONEOUS INFORMATION PROVIDED BY OTHERS.

ANDERSON ENGINEERING, INC.
BY: NSB
DATE: 11-14-15

STATE OF TEXAS
NEIL S. BRADY
86145
LICENSED
PROFESSIONAL ENGINEER
10.27.14

SHEETS BEARING THIS SEAL ARE AUTHENTICATED. RESPONSIBILITY FOR ALL OTHER PLANS, SPECIFICATIONS OR INSTRUMENTS ARE DISCLAIMED.

O'Reilly AUTO PARTS
CORPORATE OFFICES
233 SOUTH PATTERSON
SPRINGFIELD, MISSOURI 65802
(417) 862-2674 TELEPHONE

PROJECT:
NEW O'REILLY AUTO PARTS STORE
S.H. 289 (PRESTON ROAD) & E. ASH STREET
CELINA, TEXAS

CITY GENERAL NOTES

MO ANDERSON ENGINEERING, INC
ENGINEERS • SURVEYORS • LABORATORIES • DRILLING
2045 W. WOODLAND • SPRINGFIELD, MISSOURI 65807 • PHONE (417) 866-2741
ANDERSON COA# E-3704 • NEIL S BRADY PE# 86145

DRAWN BY:	CHECKED BY:
AH	NB

DATE: 10/27/14

REVISION:

PROJ # 10178-14 | DRAWING # WB-110-061 | BY: ATH | CKD: NSB

PROJECT NUMBER: CEA

SHEET NUMBER

2 of 14

P-201406-01

© COPYRIGHT 2014 – DESIGNS, DRAWINGS AND SPECIFICATIONS ARE INSTRUMENTS OF SERVICE AND ARE THE PROPERTY OF THE DESIGN PROFESSIONAL. REPRODUCTION PROHIBITED WITHOUT THE EXPRESSED WRITTEN CONSENT OF THE DESIGN PROFESSIONAL.

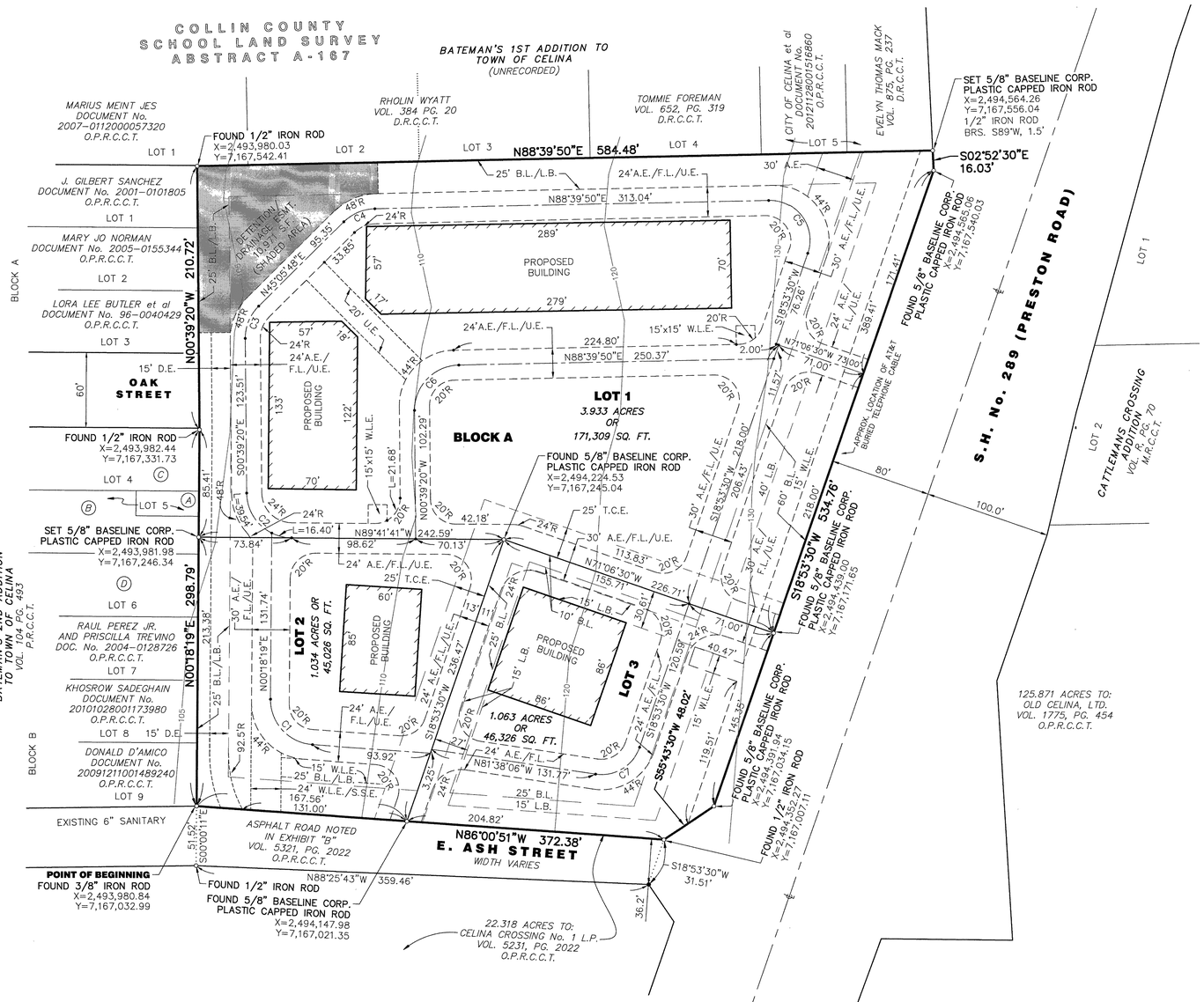

N

0 25' 50' 100'
1"=50'

CURVE DATA					
CURVE	RADIUS	LENGTH	DELTA	CHORD BEARING	CHORD LENGTH
C1	36.00'	54.24'	86°19'10"	N42°51'16"W	49.25'
C2	36.00'	55.94'	89°02'20"	N45°10'31"W	50.48'
C3	36.00'	28.75'	45°45'09"	N22°13'14"E	27.99'
C4	36.00'	27.37'	43°34'01"	N66°52'49"E	26.72'
C5	32.00'	61.56'	110°13'41"	S36°13'20"E	52.50'
C6	36.00'	56.12'	89°19'10"	S44°00'15"W	50.61'
C7	32.00'	44.39'	79°28'24"	S58°37'42"W	40.91'

(A) CITY OF CELINA et al DOCUMENT No. 2012112800151687 0 O.P.R.C.C.T.

(B) TYRONE LUPER MONIQUE LUPER DOCUMENT No. 98-0126726 O.P.R.C.C.T.

(C) BRENDA L. JACKSON READ VOL. 2752 PG. 383 D.R.C.C.T.

(D) TYRONE LUPER MONIQUE LUPER DOCUMENT No. 95-0038919 O.P.R.C.C.T.

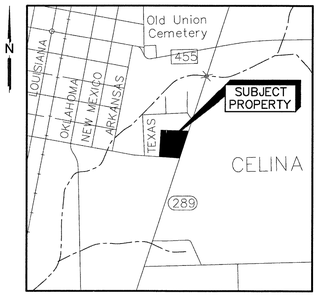

VICINITY MAP
1"=3,000'

NOTES

1. B.L. = BUILDING SETBACK LINE
2. L.B. = LANDSCAPE BUFFER
3. U.E. = UTILITY EASEMENT
4. D.E. = DRAINAGE EASEMENT
5. A.E./F.L. = ACCESS EASEMENT/FIRE LANE
6. S.S.E. = SANITARY SEWER EASEMENT
7. W.L.E. = WATER LINE EASEMENT
8. D.R.C.C.T. = DEED RECORDS OF COLLIN COUNTY, TEXAS
9. O.P.R.C.C.T. = OFFICIAL PUBLIC RECORDS OF COLLIN COUNTY, TEXAS
10. P.R.C.C.T = PLAT RECORDS OF COLLIN COUNTY, TEXAS
11. ALL CURVE RADII ARE 24' UNLESS OTHERWISE SHOWN HEREON.
12. SELLING A PORTION OF THIS ADDITION BY METES AND BOUNDS IS A VIOLATION OF CITY ORDINANCE AND STATE LAW, AND IS SUBJECT TO FINES AND WITHHOLDING OF UTILITIES AND BUILDING PERMITS.
13. THE UNDERSIGNED DOES HEREBY COVENANT AND AGREE THAT HE OR SHE OR THEY SHALL CONSTRUCT UPON THE FIRE LANE EASEMENTS, AS DEDICATED AS SHOWN HEREON, A HARD SURFACE IN ACCORDANCE WITH THE CITY OF CELINA'S PAVING STANDARDS FOR FIRE LANE, AND THAT HE OR SHE OR THEY SHALL MAINTAIN THE SAME IN A STATE OF GOOD REPAIR AT ALL TIMES AND KEEP THE SAME FREE AND CLEAR OF ANY STRUCTURES, FENCES, TREES, SHRUBS, OR OTHER IMPROVEMENTS OR OBSTRUCTION, INCLUDING BUT NOT LIMITED TO THE PARKING OF MOTOR VEHICLES, TRAILERS, BOATS OR OTHER IMPEDIMENTS TO THE ACCESSIBILITY OF FIRE APPARATUS. THE MAINTENANCE OF PAVING ON THE FIRE LANE EASEMENTS IS THE RESPONSIBILITY OF THE OWNER, AND THE OWNER SHALL POST AND MAINTAIN APPROPRIATE SIGNS IN CONSPICUOUS PLACES ALONG SUCH FIRE LANES, STATING "FIRE LANE, NO PARKING." THE LOCAL LAW ENFORCEMENT AGENCY(S) IS HEREBY AUTHORIZED TO ENFORCE PARKING REGULATIONS WITHIN THE FIRE LANES, AND TO CAUSE SUCH FIRE LANES AND UTILITY EASEMENTS TO BE MAINTAINED FREE AND UNOBSTRUCTED AT ALL TIMES FOR FIRE DEPARTMENT AND EMERGENCY USE.
14. THE UNDERSIGNED DOES HEREBY COVENANT AND AGREE THAT THE ACCESS EASEMENT MAY BE UTILIZED BY ANY PERSON OR THE GENERAL PUBLIC FOR INGRESS AND EGRESS TO PUBLIC VEHICULAR AND PEDESTRIAN USE AND ACCESS, AND FOR FIRE DEPARTMENT AND EMERGENCY USE IN, ALONG, UPON AND ACROSS SAID PREMISES, WITH THE RIGHT AND PRIVILEGE AT ALL TIMES OF THE CITY OF CELINA, ITS AGENTS, EMPLOYEES, WORKMEN AND REPRESENTATIVES HAVING INGRESS, EGRESS, AND REGRESS IN, ALONG, UPON AND ACROSS SAID PREMISES.
15. THE AREA OR AREAS SHOWN ON THE PLAT AS "VAM" (VISIBILITY, ACCESS AND MAINTENANCE) EASEMENTS(S) ARE HEREBY GIVEN AND GRANTED TO THE CITY, ITS SUCCESSORS AND ASSIGNS, AS AN EASEMENT TO PROVIDE VISIBILITY, RIGHT OF ACCESS FOR MAINTENANCE UPON AND ACROSS SAID VAM EASEMENT. THE CITY SHALL HAVE THE RIGHT BUT NOT THE OBLIGATION TO MAINTAIN ANY AND ALL LANDSCAPING WITHIN THE VAM EASEMENT. SHOULD THE CITY EXERCISE THIS MAINTENANCE RIGHT, THEN IT SHALL BE PERMITTED TO REMOVE AND DISPOSE OF ANY AND ALL LANDSCAPING IMPROVEMENTS, INCLUDING WITHOUT LIMITATION, ANY TREES, SHRUBS, FLOWERS, GROUND COVER AND FIXTURES. THE CITY MAY WITHDRAW MAINTENANCE OF THE VAM EASEMENT AT ANY TIME. THE ULTIMATE MAINTENANCE RESPONSIBILITY FOR THE VAM EASEMENT SHALL REST WITH THE OWNERS. NO BUILDING, FENCE, SHRUB, TREE OR OTHER IMPROVEMENTS OR GROWTHS, WHICH IN ANY WAY MAY ENDANGER OR INTERFERE WITH THE VISIBILITY, SHALL BE CONSTRUCTED IN, ON, OVER, OR ACROSS THE VAM EASEMENT. THE CITY SHALL ALSO HAVE THE RIGHT BUT NOT THE OBLIGATION TO ADD ANY LANDSCAPE IMPROVEMENTS TO THE VAM EASEMENT, TO ERECT ANY TRAFFIC CONTROL DEVICES OR SIGNS ON THE VAM EASEMENT AND TO REMOVE ANY OBSTRUCTION THEREON. THE CITY, ITS SUCCESSORS, ASSIGNS, OR AGENTS SHALL HAVE THE RIGHT AND PRIVILEGE AT ALL TIMES TO ENTER UPON THE VAM EASEMENT OR ANY PART THEREOF FOR THE PURPOSES AND WITH ALL RIGHTS AND PRIVILEGES SET FORTH HEREIN.
16. THE BEARINGS AND COORDINATES HEREON WERE DERIVED FROM REDUNDANT RTK GPS OBSERVATIONS AND ARE BASED ON THE TEXAS COORDINATE SYSTEM, NORTH CENTRAL ZONE (4202) NAD 83 CORS ADJUSTMENT. THE COORDINATES SHOWN HEREON ARE GRID DATUM. TO CONVERT TO SURFACE DIVIDE BY A COMBINED PROJECT ADJUSTMENT FACTOR OF 0.999853629725. DISTANCES HEREON ARE SURFACE DATUM. TO CONVERT TO GRID MULTIPLY BY A COMBINED PROJECT ADJUSTMENT FACTOR OF 0.999853629725.
17. THIS TRACT OF LAND LIES WITHIN UNSHADED ZONE X, AREAS DETERMINED TO BE OUTSIDE THE 0.2% ANNUAL CHANCE FLOODPLAIN ACCORDING TO F.E.M.A. FLOOD INSURANCE RATE MAP No. 48085C0110J DATED JUNE 2, 2009.

STATE OF TEXAS
COUNTY OF COLLIN

WHEREAS, FRISCO REAL ESTATE INVESTMENT GROUP, LLC IS THE OWNER OF A TRACT DESCRIBED AS FOLLOWS:

BEING 6.023 ACRES OF LAND SITUATED IN THE COLLIN COUNTY SCHOOL LAND SURVEY, ABSTRACT NO. 167 IN THE CITY OF CELINA, COLLIN COUNTY, TEXAS, BEING ALL OF THAT CERTAIN 6.025 ACRE TRACT OF LAND DESCRIBED IN THE DEED TO FRISCO REAL ESTATE INVESTMENT GROUP, LLC RECORDED IN DOCUMENT NO. 20070228000273560, OFFICIAL PUBLIC RECORDS OF COLLIN COUNTY, TEXAS, WHICH IS THAT SAME 6.025 ACRE TRACT OF LAND DESCRIBED IN THE DEED TO PRESTON ASH PARTNERS, LTD. RECORDED IN VOLUME 5850, PAGE 2531, OFFICIAL PUBLIC RECORDS OF COLLIN COUNTY, TEXAS, SAID 6.023 ACRE TRACT OF LAND IS DESCRIBED BY METES AND BOUNDS AS FOLLOWS:

BEGINNING AT A 3/8 INCH IRON ROD FOUND AT THE INTERSECTION OF THE NORTH RIGHT-OF-WAY OF EAST ASH STREET (WIDTH VARIES) WITH THE EAST LINE OF BATEMAN'S SECOND ADDITION, AN ADDITION TO THE TOWN OF CELINA RECORDED IN VOLUME 1, PAGE 165 MAP RECORDS OF COLLIN COUNTY, TEXAS, SAID IRON ROD BEING THE SOUTHWEST CORNER OF SAID 6.025 ACRE TRACT;

THENCE, NORTH 00 DEGREES 18 MINUTES 19 SECONDS EAST ALONG THE EAST LINE OF SAID BATEMAN'S SECOND ADDITION, 298.79 FEET TO A 1/2 INCH IRON ROD FOUND;

THENCE, NORTH 00 DEGREES 39 MINUTES 20 SECONDS WEST ALONG THE EAST LINE OF SAID BATEMAN'S SECOND ADDITION, 210.72 FEET TO 1/2 INCH IRON ROD FOUND ON THE SOUTH LINE OF BATEMAN'S FIRST ADDITION, AN UNRECORDED ADDITION TO THE TOWN OF CELINA, SAID IRON ROD BEING THE NORTHEAST CORNER OF SAID BATEMAN'S SECOND ADDITION;

THENCE, NORTH 88 DEGREES 39 MINUTES 50 SECONDS EAST ALONG THE SOUTH LINE OF SAID BATEMAN'S FIRST ADDITION, 584.48 FEET TO A 5/8 INCH "BASELINE CORP." PLASTIC CAPPED IRON ROD SET ON THE WEST RIGHT-OF-WAY LINE OF STATE HIGHWAY NO. 289 (PRESTON ROAD);

THENCE, SOUTH 02 DEGREES 52 MINUTES 30 SECONDS EAST ALONG THE WEST RIGHT-OF-WAY LINE OF STATE HIGHWAY NO. 289, 16.03 FEET TO A SET 5/8 INCH "BASELINE CORP." PLASTIC CAPPED IRON ROD;

THENCE, SOUTH 18 DEGREES 53 MINUTES 30 SECONDS WEST ALONG THE WEST RIGHT-OF-WAY LINE OF STATE HIGHWAY NO. 289, 534.76 FEET TO A FOUND 5/8 INCH "BASELINE CORP." PLASTIC CAPPED IRON ROD;

THENCE, SOUTH 55 DEGREES 43 MINUTES 30 SECONDS WEST ALONG THE WEST RIGHT-OF-WAY LINE OF STATE HIGHWAY NO. 289, 48.02 FEET TO A 1/2 INCH IRON ROD FOUND ON THE NORTH RIGHT-OF-WAY LINE OF SAID EAST ASH STREET;

THENCE, NORTH 86 DEGREES 00 MINUTES 51 SECONDS WEST ALONG THE NORTH RIGHT-OF-WAY LINE OF EAST ASH STREET, 372.38 FEET TO THE POINT OF BEGINNING AND CONTAINING 6.023 ACRES OF LAND.

NOW, THEREFORE, KNOW ALL MEN BY THESE PRESENTS:

THAT FRISCO REAL ESTATE INVESTMENT GROUP, LLC, ACTING HEREIN BY AND THROUGH ITS DULY AUTHORIZED OFFICER, DOES HEREBY ADOPT THIS PLAT DESIGNATING THE HEREIN ABOVE DESCRIBED PROPERTY AS AN ADDITION TO THE CITY OF CELINA, TEXAS, AND DOES HEREBY DEDICATE, IN FEE SIMPLE TO THE PUBLIC USE FOREVER, THE STREETS, RIGHTS-OF-WAY, AND OTHER PUBLIC IMPROVEMENTS SHOWN THEREON. THE STREETS AND ALLEYS, IF ANY, ARE DEDICATED FOR STREET PURPOSES. THE EASEMENTS AND PUBLIC USE AREAS, AS SHOWN, ARE DEDICATED, FOR THE PUBLIC USE FOREVER, FOR THE PURPOSES INDICATED ON THIS PLAT. NO BUILDINGS, FENCES, TREES, SHRUBS OR OTHER IMPROVEMENTS OR GROWTHS SHALL BE CONSTRUCTED OR PLACED UPON, OVER OR ACROSS THE EASEMENTS AS SHOWN, EXCEPT THAT LANDSCAPE IMPROVEMENTS MAY BE PLACED ON LANDSCAPE EASEMENTS, IF APPROVED BY THE CITY COUNCIL OF THE CITY OF CELINA. IN ADDITION, UTILITY EASEMENTS MAY ALSO BE USED FOR THE MUTUAL USE AND ACCOMMODATION OF ALL PUBLIC UTILITIES DESIRING TO USE OR USING THE SAME UNLESS THE EASEMENT LIMITS THE USE TO PARTICULAR UTILITIES, SAID USE BY PUBLIC UTILITIES BEING SUBORDINATE TO THE PUBLIC'S AND CITY OF CELINA'S USE THEREOF. THE CITY OF CELINA AND PUBLIC UTILITY ENTITIES SHALL HAVE THE RIGHT TO REMOVE AND KEEP REMOVED ALL OR PARTS OF ANY BUILDINGS, FENCES, TREES, SHRUBS OR OTHER IMPROVEMENTS OR GROWTHS WHICH MAY IN ANY WAY ENDANGER OR INTERFERE WITH THE CONSTRUCTION, MAINTENANCE, OR EFFICIENCY OF THEIR RESPECTIVE SYSTEMS IN SAID EASEMENTS. THE CITY OF CELINA AND PUBLIC UTILITY ENTITIES SHALL AT ALL TIMES HAVE THE FULL RIGHT OF INGRESS AND EGRESS TO OR FROM THEIR RESPECTIVE EASEMENTS FOR THE PURPOSE OF CONSTRUCTING, RECONSTRUCTING, INSPECTING, PATROLLING, MAINTAINING, READING METERS, AND ADDING TO OR REMOVING ALL OR PARTS OF THEIR RESPECTIVE SYSTEMS WITHOUT THE NECESSITY AT ANY TIME PROCURING PERMISSION FROM ANYONE.

THIS PLAT APPROVED SUBJECT TO ALL PLATTING ORDINANCES, RULES, REGULATIONS AND RESOLUTIONS OF THE CITY OF CELINA, TEXAS

WITNESS, MY HAND THIS THE _____ DAY OF _____, 20___.

BY: FRISCO REAL ESTATE INVESTMENT GROUP, LLC

BY: _____
LY TRUONG
TITLE:

STATE OF TEXAS
COUNTY OF HARRIS

BEFORE ME, THE UNDERSIGNED AUTHORITY, A NOTARY PUBLIC IN AND FOR THE STATE OF TEXAS, ON THIS DAY PERSONALLY APPEARED STEVEN E. WILLIAMS, REGISTERED PUBLIC LAND SURVEYOR, KNOWN TO ME TO BE THE PERSON WHOSE NAME IS SUBSCRIBED TO THE FOREGOING INSTRUMENT AND ACKNOWLEDGED TO ME THAT HE EXECUTED THE SAME FOR THE PURPOSE AND CONSIDERATIONS THEREIN EXPRESSED.

GIVEN UNDER MY HAND SEAL OF OFFICE, THIS____DAY OF_____, 20____.

_____
NOTARY PUBLIC IN AND FOR THE STATE OF TEXAS

MY COMMISSION EXPIRES ON:_____

KNOWN ALL MEN BY THESE PRESENTS:

THAT I, STEVEN E. WILLIAMS, DO HEREBY CERTIFY THAT I PREPARED THIS PLAT FROM AN ACTUAL AND ACCURATE SURVEY OF THE LAND AND THAT THE CORNER MONUMENTS SHOWN THEREON AS "SET" WERE PROPERLY PLACED UNDER MY PERSONAL SUPERVISION IN ACCORDANCE WITH THE SUBDIVISION ORDINANCE OF THE CITY OF CELINA.

_____
STEVEN E. WILLIAMS, R.P.L.S.
TEXAS REGISTRATION No. 4819

STATE OF TEXAS REGISTERED STEVEN E. WILLIAMS 4819 PROFESSIONAL LAND SURVEYOR

STATE OF TEXAS
COUNTY OF COLLIN

BEFORE ME, THE UNDERSIGNED AUTHORITY, A NOTARY PUBLIC IN AND FOR THE STATE OF TEXAS, ON THIS DAY PERSONALLY APPEARED PHU TRAN OF FRISCO REAL ESTATE INVESTMENT GROUP, LLC, OWNER, KNOWN TO ME TO BE THE PERSON WHOSE NAME IS SUBSCRIBED TO THE FOREGOING INSTRUMENT AND ACKNOWLEDGED TO ME THAT HE EXECUTED THE SAME FOR THE PURPOSE AND CONSIDERATIONS THEREIN EXPRESSED.

GIVEN UNDER MY HAND SEAL OF OFFICE, THIS____DAY OF_____,20____

_____
NOTARY PUBLIC IN AND FOR THE STATE OF TEXAS

MY COMMISSION EXPIRES ON: _____

THIS PROPERTY IS LOCATED IN THE CORPORATE LIMITS OF THE CITY OF CELINA, COLLIN COUNTY, TEXAS.

_____ SIGNATURE OF MAYOR — _____ DATE OF APPROVAL

ATTEST:

_____ CITY SECRETARY — _____ DATE

RECOMMENDED BY: — PLANNING AND ZONING COMMISSION CITY OF CELINA, TEXAS

_____ SIGNATURE OF CHAIRPERSON — _____ DATE OF RECOMMENDATION

APPROVED BY: — CITY COUNCIL CITY OF CELINA, TEXAS

_____ SIGNATURE OF MAYOR — _____ DATE OF APPROVAL

ATTEST:

_____ CITY SECRETARY — _____ DATE

CONSTRUCTION PLAT

CELINA RETAIL ADDITION

BEING A SUBDIVISION OF 6.030 ACRES OF LAND IN THE COLLIN COUNTY SCHOOL LAND SURVEY, ABSTRACT No. 167, IN THE CITY OF CELINA, COLLIN COUNTY, TEXAS

CONTAINING: 1 BLOCK AND 3 LOTS

LAND SURVEYOR
BASELINE PROFESSIONAL SURVEYORS
BASELINE CORPORATION
1750 SEAMIST DRIVE, SUITE 160
HOUSTON, TEXAS 77008
PHONE (713) 869-0155
TBPLS FIRM No. 10030200

DEVELOPER - LOT 3
O'Reilly AUTO PARTS
O'REILLY AUTO ENTERPRISES, LLC
233 SOUTH PATTERSON
SPRINGFIELD, MISSOURI 65802
PHONE (417) 862-3333

OWNER - ENTIRE SITE/ DEVELOPER - LOTS 1 AND 2
FRISCO REAL ESTATE INVESTMENT GROUP, LLC
10109 MORNING GLORY LN
FRISCO, TX 75035-7041

OCTOBER 27, 2014

H:\2013\13525 O'Reilly Celina TX (CEA) Survey\DWG\ Plat - Celina Texas (CEA) Site.dwg Oct 27,2014-1:36 PM jiggenbach

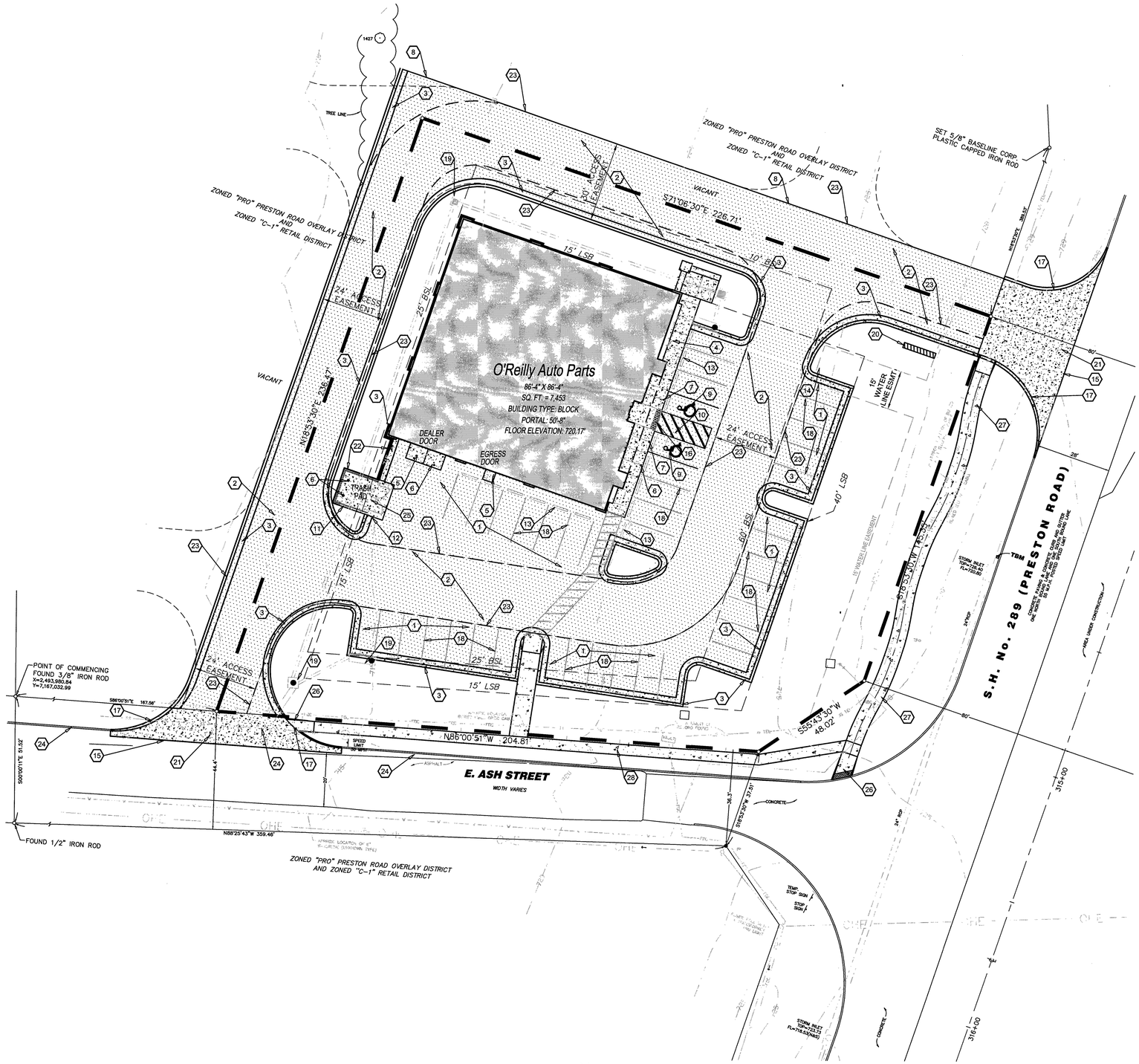

1 SITE PLAN
4

SCALE: 1" = 20'

N

KEY NOTES:

1. STANDARD DUTY CONCRETE PAVING: REFER TO DETAIL 1 ON SHEET 8.
2. HEAVY DUTY CONCRETE PAVING: REFER TO DETAIL 2 ON SHEET 8.
3. CONCRETE CURB: REFER TO DETAIL 3 ON SHEET 8.
4. CONCRETE SIDEWALK: REFER TO DETAIL 4 ON SHEET 8.
5. CONCRETE DOOR LANDING: REFER TO DETAIL 4 ON SHEET 8 AND STRUCTURAL DETAILS. RAMP PAVING AS INDICATED. LANDING CAN BE POURED MONOLITHIC IF CONCRETE PAVING IS USED.
6. STEEL BOLLARD: REFER TO DETAIL 6 ON SHEET 8. PROVIDE (2) AT TRASH PAD AND OVERHEAD DOOR, PROVIDE (9) AT SIDEWALK. REFER TO STRUCTURAL PLAN FOR LOCATION.
7. HANDICAP PARKING SIGN: REFER TO DETAIL 7 ON SHEET 8.
8. LIMITS OF NEW PAVING: REFER TO SHEET 8 FOR DETAILS.
9. HANDICAP PARKING SYMBOL: REFER TO DETAIL 5 ON SHEET 8.
10. HANDICAP ACCESS UNLOADING ZONE: SLOPE 2% MAX. EACH WAY (ADA COMPLIANT) AND STRIPE AS SHOWN.
11. SCREEN FENCE: REFER TO DETAIL 12 ON SHEET 8.
12. SCREEN FENCE GATES: REFER TO DETAIL 11 ON SHEET 8.
13. CONCRETE BUMPER BLOCK: 8"w x 5"h x 6'-0" LONG CONCRETE. ANCHOR TO PAVING WITH (2)1'-6" LONG #4 REBAR.
14. PARKING LOT LIGHTING: REFER TO SITE UTILITIES PLAN FOR LOCATION AND TYPE.
15. LIMITS OF NEW PAVING: MATCH EXISTING PER CITY AND OR STATE STANDARDS.
16. DETECTABLE WARNING SURFACE: REFER TO DETAIL 8 ON SHEET 8.
17. CONCRETE CURB: NEW CONCRETE CURB TO MATCH EXISTING PER CITY AND OR STATE DESIGN STANDARDS.
18. STRIPING: PROVIDE 4" WIDE PARKING LOT STRIPING AS SHOWN. USE HIGHWAY MARKING PAINT - YELLOW (2 COATS)
19. CONCRETE DRAINAGE INLET: REFER TO SHEET 6.
20. SIGN LOCATION: SIGN FURNISHED AND INSTALLED BY OWNER UNDER SEPARATE PERMIT. FOUNDATION AND MASONRY BASE BY CONTRACTOR. REFER TO STRUCTURAL DRAWING AND SITE UTILITY PLAN FOR DETAILS.
21. CONCRETE DRIVE APRON: TO BE INSTALLED PER CITY AND OR STATE DESIGN STANDARDS. IF NO STANDARDS PROVIDE CONCRETE PAVING CONSTRUCTION AS SHOWN ON DETAIL 2 ON SHEET 8.
22. RETAINING WALL: REFER TO SITE GRADING PLANS AND STRUCTURAL PLANS. PROVIDE 42" HIGH CHAIN LINK FENCE ON TOP OF WALL WHERE GRADE DIFFERENCE IS 2'-6" OR GREATER.
23. FIRE LANE: PROVIDE 6" WIDE STRIPING AS SHOWN (RED). PROVIDE LETTERING 3" IN HEIGHT WITHIN STRIPING TO STATE "FIRE LANE;NO PARKING" (WHITE). USE HIGHWAY MARKING PAINT (2 COATS).
24. PROPOSED ASH ST IMPROVEMENTS: REFER TO C.I.P. #P-201401-01 BY HALFF ASSOCIATES, INC. FOR PROPOSED ASH STREET IMPROVEMENTS.
25. TRASH PAD CONCRETE PAVING: REFER TO DETAIL 9 ON SHEET 8.
26. HANDICAP RAMP: TO BE INSTALLED PER CITY AND OR STATE DESIGN STANDARDS.
27. 6' CONCRETE SIDEWALK: TO BE INSTALLED PER CITY AND OR STATE DESIGN STANDARDS.
28. 4' CONCRETE SIDEWALK: TO BE INSTALLED PER CITY AND OR STATE DESIGN STANDARDS.

SYMBOLS LEGEND

REFER TO SURVEY FOR EXISTING CONDITION SYMBOLS LEGEND

	NEW BUILDING CONSTRUCTION
	AREA OF CONCRETE
	NEW MONUMENT SIGN LOCATION
	NEW CONCRETE PAVING BLOCK
	NEW LIGHT POLE LOCATION
BSL	BUILDING SETBACK LINE
LSB	LANDSCAPE SETBACK
TYP.	TYPICAL

GENERAL NOTES:

A. REFER TO PROJECT MANUAL FOR ADDITIONAL REQUIREMENTS.

B. ALL SITE DIMENSIONS TO THE GUTTER LINE OF CURB, CONCRETE OR PROPERTY LINE UNLESS OTHERWISE NOTED. CONTRACTOR TO FIELD VERIFY EXISTING CONDITIONS BY DETAILED INSPECTION PRIOR TO SUBMITTING BID AND STARTING CONSTRUCTION.

C. COORDINATE WORK WITH OTHER SITE RELATED DEVELOPMENT DRAWINGS.

D. REFER TO STRUCTURAL PLANS FOR DEVELOPMENT OF SIDEWALKS ADJACENT TO FOUNDATIONS.

E. PRIOR TO INSTALLATION, GENERAL CONTRACTOR TO CONFIRM THAT LIGHT POLES, LANDSCAPING AND UTILITIES DO NOT CONFLICT WITH SIGN LOCATION SHOWN. IF ANY POTENTIAL CONFLICT IS DISCOVERED, GENERAL CONTRACTOR IS TO CONTACT O'REILLY PROJECT ADMINISTRATOR BEFORE PROCEEDING.

PAVING SUMMARY

PAVING THICKNESSES:

PARKING SPACES	= 5" CONCRETE ON 6" BASE*.
FIRE LANE AND DRIVE	= 6" CONCRETE ON 6" BASE*.
DUMPSTER PAD	= 7" CONCRETE ON 6" BASE*.

*BASE SHALL BE 7% LIME STABILIZED BASE.

REFER TO DETAILS 1/C3, 2/C3 & 9/C3.

PARKING SUMMARY

FORMULA:
1 SPACE PER 200 SF OF GROSS FLOOR AREA.

BUILDING SQUARE FOOTAGE	= 7,453.
1/200 x 7,453 SF	= 37.25
SPACES REQUIRED	= 38
SPACE PROVIDED	= 41
H/C SPACES REQUIRED	= 2
H/C SPACE PROVIDED	= 2

RECORD DRAWINGS

THESE RECORD DRAWINGS HAVE BEEN PREPARED BASED ON INFORMATION PROVIDED BY OTHERS. ANDERSON ENGINEERING, INC. HAS NOT VERIFIED THE ACCURACY AND/OR COMPLETENESS OF THIS INFORMATION. UNLESS OTHERWISE NOTED ON THESE DOCUMENTS, ANDERSON ENGINEERING, INC. SHALL NOT BE RESPONSIBLE FOR ANY ERRORS OR OMISSIONS THAT MAY BE INCORPORATED AS A RESULT OF ERRONEOUS INFORMATION PROVIDED BY OTHERS.

ANDERSON ENGINEERING, INC.
BY:
DATE: 11-19-14

A. CELINA, TEXAS (CEA)
B. O'REILY AUTOMOTIVE STORES, INC.
233 SOUTH PATTERSON
SPRINGFIELD, MO 65802
BUDDY D. WEBB
C. 0 20' 40' 60'
1" = 20'
D. 9/11/14
E. 1.064 ACRES
F. LOT 3, BLOCK A, CELINA RETAIL ADDITION
G. COLLIN COUNTY

STATE OF TEXAS
NEIL S. BRADY
68145
LICENSED
PROFESSIONAL ENGINEER
10-27-14

SHEETS BEARING THIS SEAL ARE AUTHENTICATED, RESPONSIBILITY FOR ALL OTHER PLANS, SPECIFICATIONS OR INSTRUMENTS ARE DISCLAIMED.

O'Reilly AUTO PARTS
CORPORATE OFFICES
233 SOUTH PATTERSON
SPRINGFIELD, MISSOURI 65802
(417) 862-2674 TELEPHONE

PROJECT:
NEW O'REILLY AUTO PARTS STORE
S.H. 289 (PRESTON ROAD) & E. ASH STREET
CELINA, TEXAS

SITE PLAN

MO ANDERSON ENGINEERING, INC
ENGINEERS • SURVEYORS • LABORATORIES • DRILLING
2045 W. WOODLAND • SPRINGFIELD, MISSOURI 65807 • PHONE (417) 866-2741
ANDERSON CO.#E-2704 • NEIL S BRADY, PE# 88145

PROJ # 10122-14
DRAWING # WB-110-061
BY: ATH
CKD: NSB

DRAWN BY: AH
CHECKED BY: NB
DATE: 10/27/14
REVISION:
PROJECT NUMBER: CEA
SHEET NUMBER 4 of 14

P-201406-01

COPYRIGHT 2014 – DESIGNS, DRAWINGS AND SPECIFICATIONS ARE INSTRUMENTS OF SERVICE AND ARE THE PROPERTY OF THE DESIGN PROFESSIONAL. REPRODUCTION PROHIBITED WITHOUT THE EXPRESSED WRITTEN CONSENT OF THE DESIGN PROFESSIONAL.

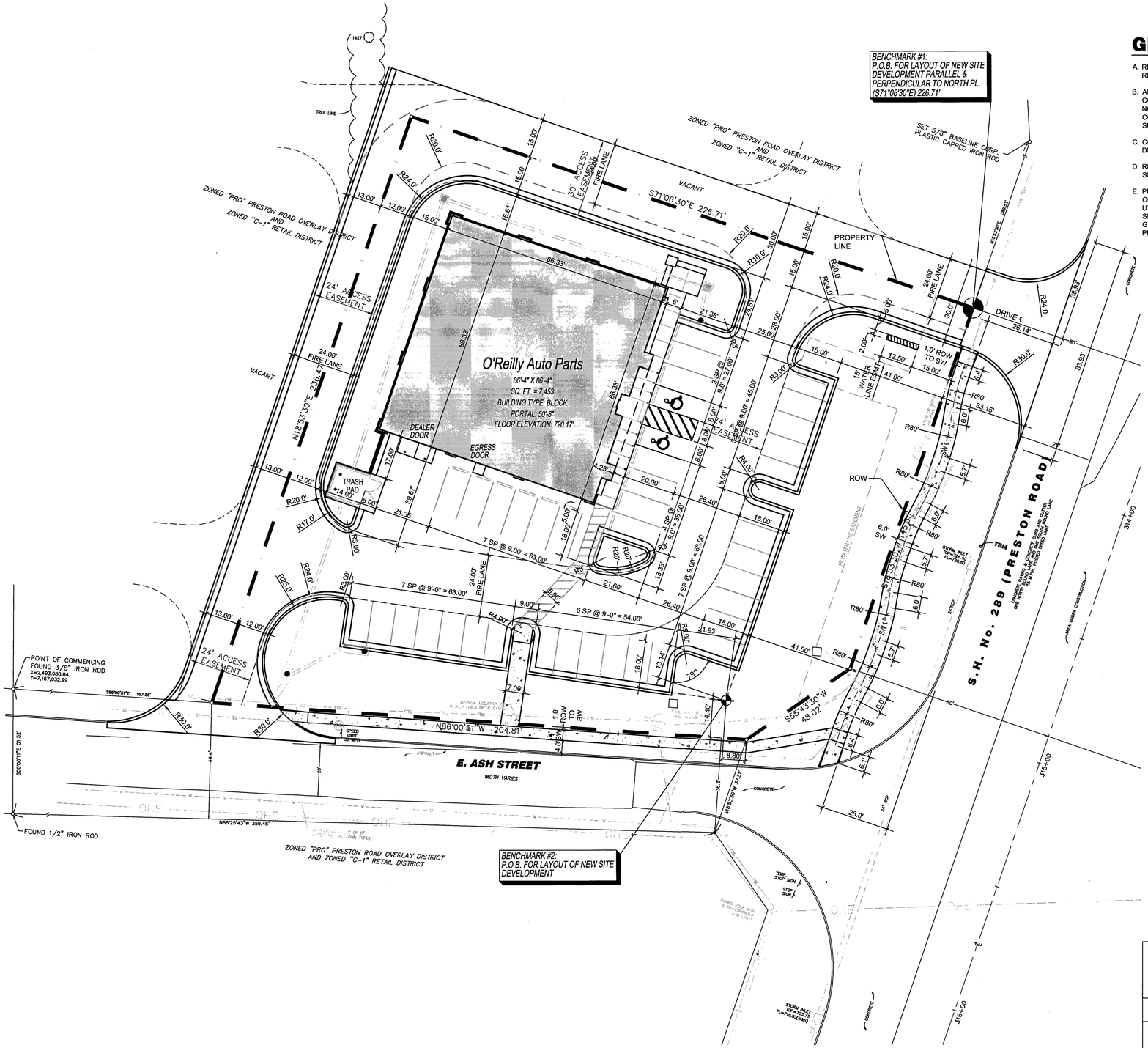

GENERAL NOTES:

A. REFER TO PROJECT MANUAL FOR ADDITIONAL REQUIREMENTS.

B. ALL SITE DIMENSIONS TO THE GUTTER LINE OF CURB, CONCRETE OR PROPERTY LINE UNLESS OTHERWISE NOTED. CONTRACTOR TO FIELD VERIFY EXISTING CONDITIONS BY DETAILED INSPECTION PRIOR TO SUBMITTING BID AND STARTING CONSTRUCTION.

C. COORDINATE WORK WITH OTHER SITE RELATED DEVELOPMENT DRAWINGS.

D. REFER TO STRUCTURAL PLANS FOR DEVELOPMENT OF SIDEWALKS ADJACENT TO FOUNDATIONS.

E. PRIOR TO INSTALLATION, GENERAL CONTRACTOR TO CONFIRM THAT LIGHT POLES, LANDSCAPING AND UTILITIES DO NOT CONFLICT WITH SIGN LOCATION SHOWN. IF ANY POTENTIAL CONFLICT IS DISCOVERED, GENERAL CONTRACTOR IS TO CONTACT O'REILLY PROJECT ADMINISTRATOR BEFORE PROCEEDING.

1 DIMENSION CONTROL PLAN

5 SCALE: 1" = 20'

N

SYMBOLS LEGEND

REFER TO SURVEY FOR EXISTING CONDITION SYMBOLS LEGEND

	NEW BUILDING CONSTRUCTION
	AREA OF CONCRETE
	NEW MONUMENT SIGN LOCATION
	NEW CONCRETE PAVING BLOCK
	NEW LIGHT POLE LOCATION

CALL BEFORE YOU DIG! TEXAS ONE CALL

RECORD DRAWINGS

THESE RECORD DRAWINGS HAVE BEEN PREPARED BASED ON INFORMATION PROVIDED BY OTHERS. ANDERSON ENGINEERING, INC. HAS NOT VERIFIED THE ACCURACY AND/OR COMPLETENESS OF THIS INFORMATION. UNLESS OTHERWISE NOTED ON THESE DOCUMENTS, ANDERSON ENGINEERING, INC. SHALL NOT BE RESPONSIBLE FOR ANY ERRORS OR OMISSIONS THAT MAY BE INCORPORATED AS A RESULT OF ERRONEOUS INFORMATION PROVIDED BY OTHERS.

ANDERSON ENGINEERING, INC.
BY:
DATE: 11-14-14

A. CELINA, TEXAS (CEA)
B. O'REILY AUTOMOTIVE STORES, INC.
233 SOUTH PATTERSON
SPRINGFIELD, MO 65802
BUDDY D. WEBB
C. 0 20' 40' 60'
1" = 20'
D. 9/11/14
E. 1.064 ACRES
F. LOT 3, BLOCK A, CELINA RETAIL ADDITION
G. COLLIN COUNTY

STATE OF TEXAS
NEIL S. BRADY
88145
LICENSED PROFESSIONAL ENGINEER
10.27.14

SHEETS BEARING THIS SEAL ARE AUTHENTICATED. RESPONSIBILITY FOR ALL OTHER PLANS, SPECIFICATIONS OR INSTRUMENTS ARE DISCLAIMED.

O'Reilly AUTO PARTS
CORPORATE OFFICES
233 SOUTH PATTERSON
SPRINGFIELD, MISSOURI 65802
(417) 862-2674 TELEPHONE

PROJECT:
NEW O'REILLY AUTO PARTS STORE
S.H. 289 (PRESTON ROAD) & E. ASH STREET
CELINA, TEXAS

DIMENSION CONTROL PLAN

MO ANDERSON ENGINEERING, INC.
ENGINEERS • SURVEYORS • LABORATORIES • DRILLING
2045 W. WOODLAND • SPRINGFIELD, MISSOURI 65807 • PHONE (417) 866-2741
ANDERSON CO.# F-3704 • NEIL S BRADY, PE# 88145

PROJ # 10122-14
DRAWING # WB-110-061
BY: ATH
CKD: NSB

DRAWN BY: AH
CHECKED BY: NB
DATE: 10/27/14
REVISION:
PROJECT NUMBER: CEA
SHEET NUMBER
5 of 14

P-201406-01

© COPYRIGHT 2014 – DESIGNS, DRAWINGS AND SPECIFICATIONS ARE INSTRUMENTS OF SERVICE AND ARE THE PROPERTY OF THE DESIGN PROFESSIONAL. REPRODUCTION PROHIBITED WITHOUT THE EXPRESSED WRITTEN CONSENT OF THE DESIGN PROFESSIONAL.

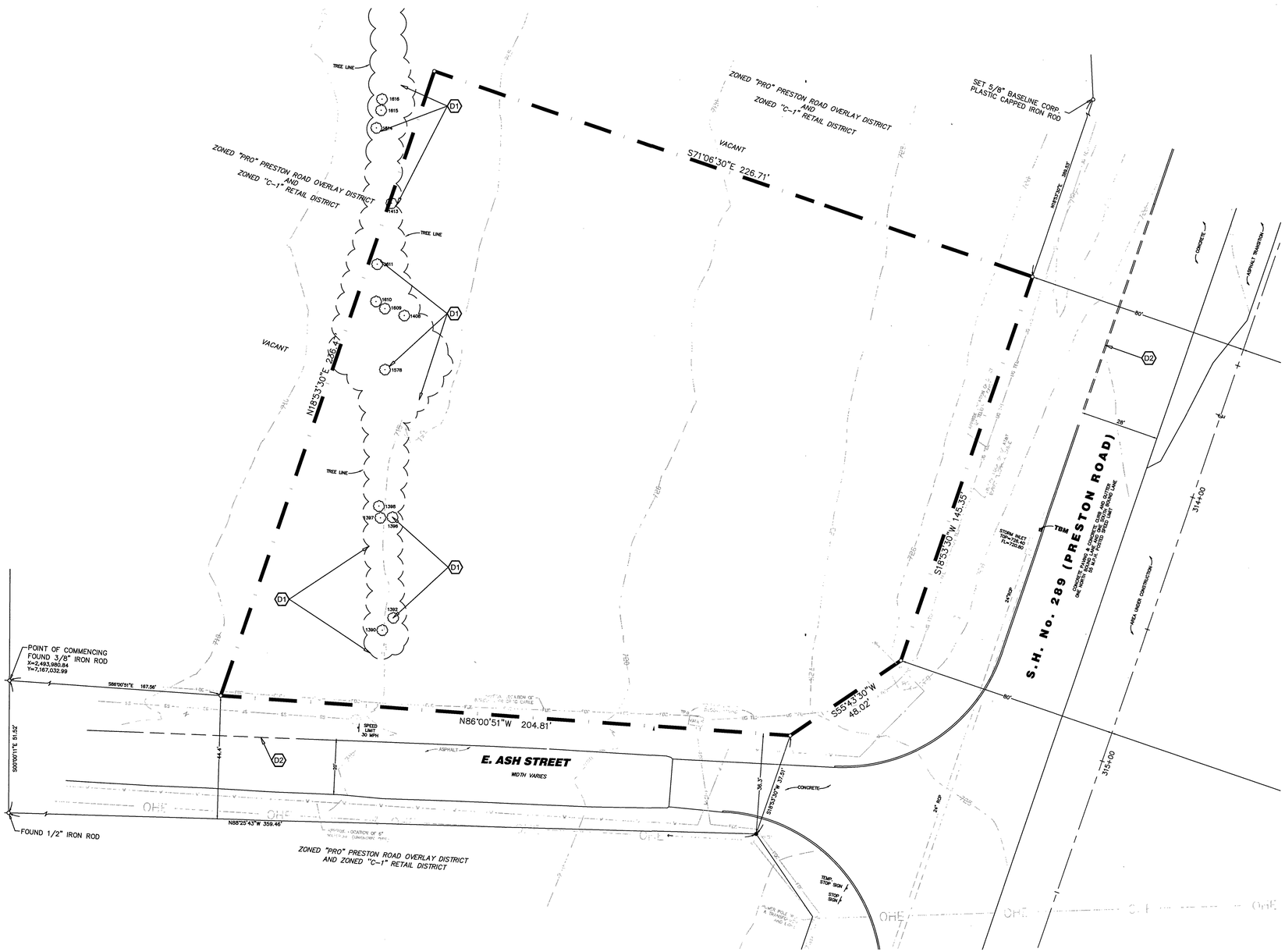

1 DEMOLITION PLAN

5

SCALE: 1" = 20'

GENERAL NOTES:

A. REFER TO PROJECT MANUAL FOR ADDITIONAL REQUIREMENTS.

B. SITE CONDITIONS BASED UPON SURVEY SUBMITTED BY OWNER. FIELD VERIFY EXISTING CONDITIONS BY DETAILED SITE INSPECTION PRIOR TO SUBMITTING BID AND BEGINNING CONSTRUCTION.

C. REMOVE ALL EXISTING SITE CONSTRUCTION AND DELETERIOUS MATERIALS UNLESS OTHERWISE NOTED.

D. REFER TO SITE UTILITIES PLAN FOR DEMOLITION OF EXISTING UTILITIES.

E. ALL DEMOLISHED MATERIALS SHALL BECOME PROPERTY OF CONTRACTOR FOR PROPER DISPOSAL UNLESS OTHERWISE NOTED.

KEY NOTES:

D1 EXISTING VEGETATION:
EXISTING VEGETATION TO BE REMOVED.

D2 EXISTING CURB:
EXISTING CURB TO BE REMOVED.

SPECIAL HAZARDOUS MATERIALS NOTE:

1. AN ENVIRONMENTAL ANALYSIS HAS BEEN PERFORMED ON THE EXISTING SITE. REFER TO PROJECT MANUAL.
2. IF THIS PROJECT CONTAINS HAZARDOUS MATERIALS CONTRACTOR IS TO PROVIDE PROPER HANDLING, REMOVAL AND DISPOSAL PER ENVIRONMENTAL ANALYSIS RECOMMENDATIONS.

NUMBERED TREE LIST	
POINT NO.	TREE SIZE & SPECIES
1390	6" HACKBERRY
1392	(3) 6" HACKBERRY
1396	8" HACKBERRY
1397	8" HACKBERRY
1398	10" HACKBERRY
1408	8" HAWTHORN
1413	10" HACKBERRY
1427	10" HACKBERRY
1578	18" HACKBERRY
1609	(3) 8" HACKBERRY
1610	(2) 6" HAWTHORN
1611	(2) 6" HACKBERRY
1614	6" HACKBERRY
1615	6" HACKBERRY
1616	(2) 8" HACKBERRY

RECORD DRAWINGS

THESE RECORD DRAWINGS HAVE BEEN PREPARED BASED ON INFORMATION PROVIDED BY OTHERS. ANDERSON ENGINEERING, INC. HAS NOT VERIFIED THE ACCURACY AND/OR COMPLETENESS OF THIS INFORMATION. UNLESS OTHERWISE NOTED ON THESE DOCUMENTS. ANDERSON ENGINEERING, INC. SHALL NOT BE RESPONSIBLE FOR ANY ERRORS OR OMISSIONS THAT MAY BE INCORPORATED AS A RESULT OF ERRONEOUS INFORMATION PROVIDED BY OTHERS.

ANDERSON ENGINEERING, INC.
BY:
DATE: 11-18-15

SYMBOLS LEGEND

REFER TO SURVEY FOR EXISTING CONDITION SYMBOLS LEGEND	
- - - - - - -	EXISTING ITEMS TO BE REMOVED

STATE OF TEXAS
NEIL S. BRADY
88145
LICENSED PROFESSIONAL ENGINEER
10-27-14

SHEETS BEARING THIS SEAL ARE AUTHENTICATED, RESPONSIBILITY FOR ALL OTHER PLANS, SPECIFICATIONS OR INSTRUMENTS ARE DISCLAIMED.

O'Reilly AUTO PARTS
CORPORATE OFFICES
233 SOUTH PATTERSON
SPRINGFIELD, MISSOURI 65802
(417) 862-2674 TELEPHONE

PROJECT:
NEW O'REILLY AUTO PARTS STORE
S.H. 289 (PRESTON ROAD) & E. ASH STREET
CELINA, TEXAS

DEMOLITION PLAN

MO ANDERSON ENGINEERING, INC.
ENGINEERS • SURVEYORS • LABORATORIES • DRILLING
2045 W. WOODLAND • SPRINGFIELD, MISSOURI 65807 • PHONE (417) 886-2741
ANDERSON COA# F-3704 • NEIL S. BRADY, PE# 88145

PROJ # 10122-14
DRAWING # WB-110-061
BY: ATH
CKD: NSB

DRAWN BY: AH
CHECKED BY: NB
DATE: 10/27/14
REVISION:
PROJECT NUMBER: CEA
SHEET NUMBER: 6 of 14

P-201406-01

COPYRIGHT 2014 – DESIGNS, DRAWINGS AND SPECIFICATIONS ARE INSTRUMENTS OF SERVICE AND ARE THE PROPERTY OF THE DESIGN PROFESSIONAL. REPRODUCTION PROHIBITED WITHOUT THE EXPRESSED WRITTEN CONSENT OF THE DESIGN PROFESSIONAL.

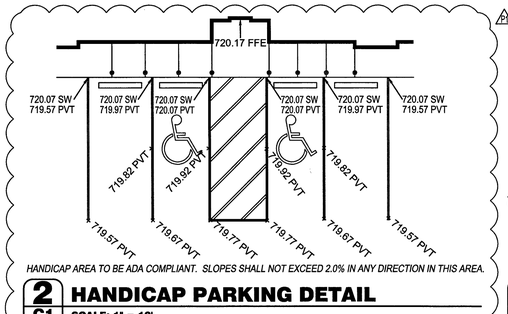

HANDICAP AREA TO BE ADA COMPLIANT. SLOPES SHALL NOT EXCEED 2.0% IN ANY DIRECTION IN THIS AREA.

2 C1 HANDICAP PARKING DETAIL
SCALE: 1" = 10'

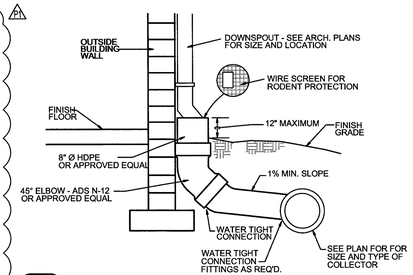

4 7 DOWNSPOUT COLLECTOR
SCALE: NOT TO SCALE

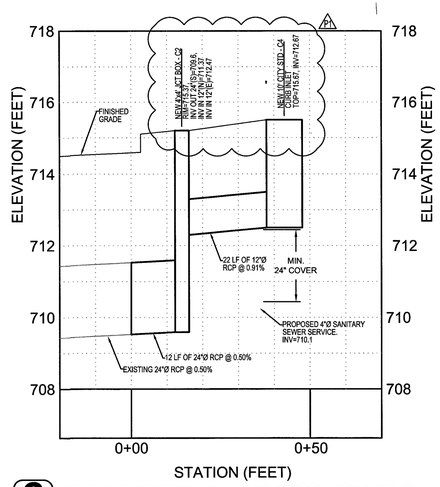

6 7 STORM SEWER CONNECTION PROFILE
SCALE: NOT TO SCALE

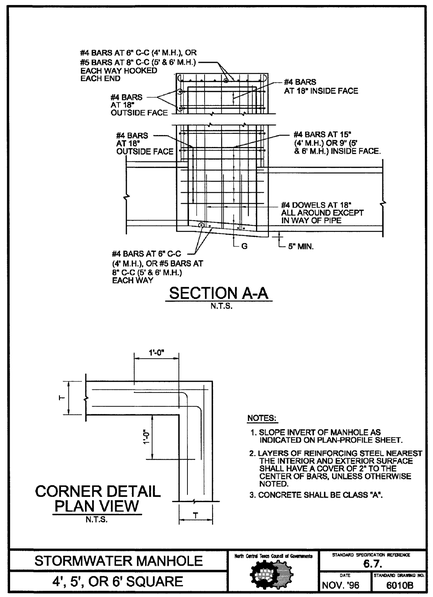

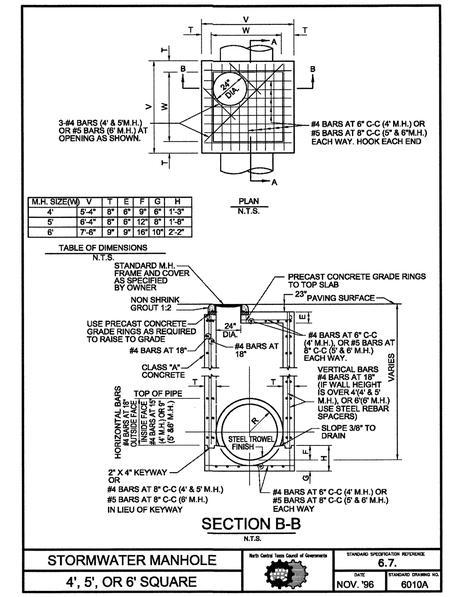

NOTE: MIN. #4 BARS @ 12" O.C. (ALL WALLS VERT, HOR, & SLAB)

3 7 AREA INLET DETAIL
SCALE: NOT TO SCALE

TXDOT STORMWATER NOTE:
NO ADDITIONAL RUN OFF WILL BE DIRECTED TO STATE ROW FROM SITE.

CONTRACTOR SHALL FIELD VERIFY PROPOSED GRADES MATCH EXISTING PAVEMENT AT DRIVEWAY ENTRANCES. CONTRACTOR SHALL NOTIFY ENGINEER IF DISCREPANCY OCCURS.

STORM WATER RUNOFF SUMMARY:
TOTAL PROPERTY AREA= 1.06 ACRES

STORMWATER RUNOFF DIRECTED TO ASH STREET. ON-SITE DETENTION IS NOT REQUIRED BECAUSE THE RUNOFF FROM THE DEVELOPMENT IS ACCOUNTED FOR IN THE STORMWATER SYSTEM CONSTRUCTED AS PART OF WIDENING OF ASH STREET PROJECT (C.I.P. #P-201401-01).

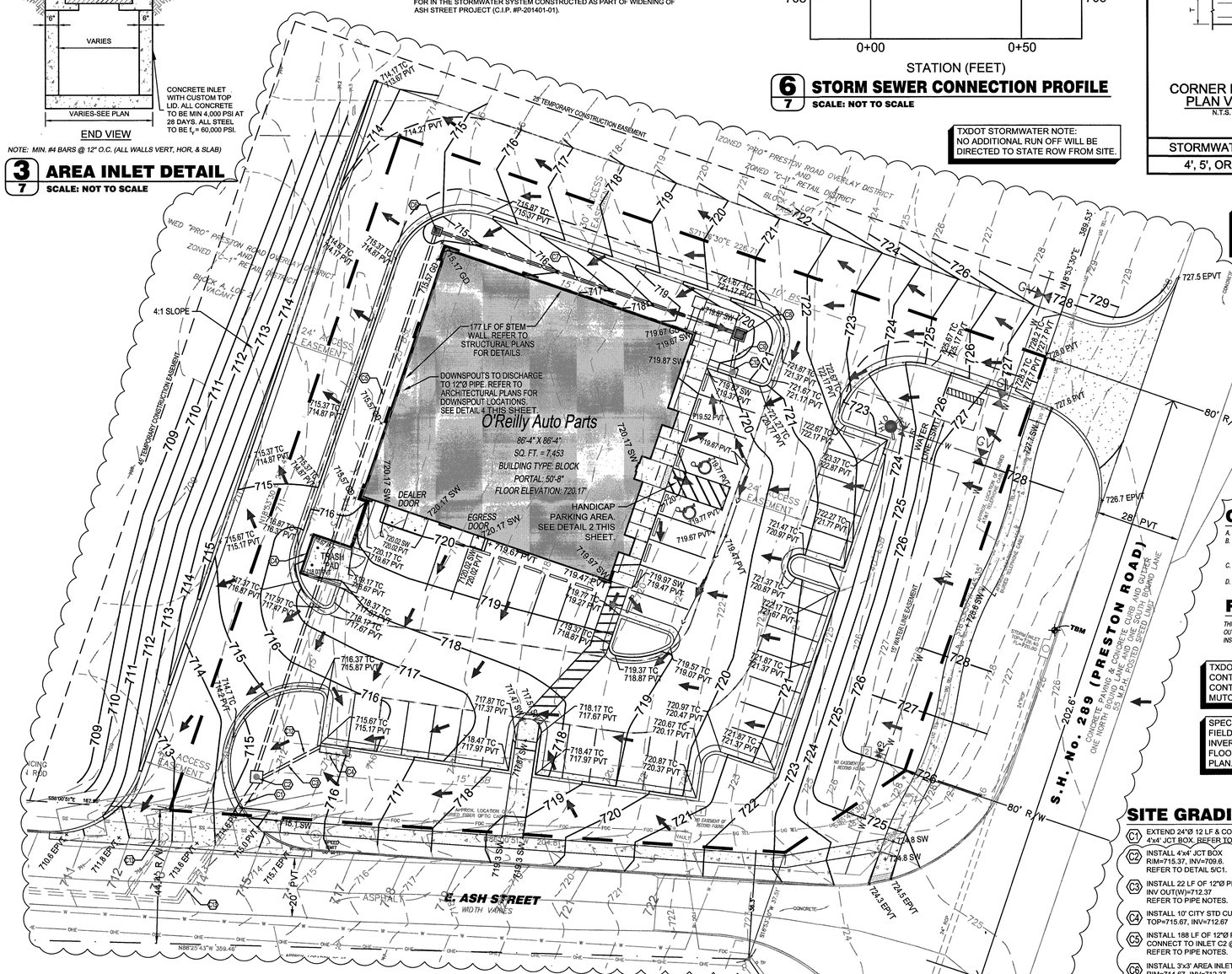

1 7 SITE GRADING PLAN
SCALE: 1" = 20'

N

HORIZONTAL SCALE
20 0 10 20 40 80
(IN FEET)
1 inch = 20 ft.

GENERAL NOTES:
A. REFER TO PROJECT MANUAL FOR ADDITIONAL REQUIREMENTS.
B. SITE CONDITIONS BASED UPON SURVEY SUBMITTED BY OWNER. FIELD VERIFY EXISTING CONDITIONS BY DETAILED SITE INSPECTION PRIOR TO SUBMITTING BID AND BEGINNING CONSTRUCTION.
C. FIELD VERIFY SANITARY SEWER SERVICE CONNECTION INVERT PRIOR TO ESTABLISHING FINAL FINISH FLOOR ELEVATION.
D. COORDINATE WORK WITH OTHER SITE RELATED DEVELOPMENT DRAWINGS.

FLOOD ZONE:
THIS TRACT OF LAND LIES WITHIN UNSHADED ZONE X, AREAS DETERMINED TO BE OUTSIDE THE 0.2% ANNUAL CHANCE FLOODPLAIN ACCORDING TO F.E.M.A. FLOOD INSURANCE RATE MAP No. 48085C0110J DATED JUNE 2, 2009.

TXDOT TRAFFIC CONTROL NOTE:
CONTRACTOR WILL COORDINATE TRAFFIC CONTROL PER TXDOT AND/OR MOST RECENT MUTCD STANDARDS.

SPECIAL NOTE:
FIELD VERIFY SANITARY SEWER CONNECTION INVERT PRIOR TO ESTABLISHING FINAL FINISH FLOOR ELEVATION. REFER TO SITE UTILITIES PLAN.

SITE GRADING KEY NOTES:
- C1 EXTEND 24"Ø 12 LF & CONNECT TO 4'x4' JCT BOX. REFER TO PIPE NOTES.
- C2 INSTALL 4'x4' JCT BOX RIM=715.37, INV=709.6. REFER TO DETAIL 5/C1.
- C3 INSTALL 22 LF OF 12"Ø PIPE. INV OUT(W)=712.37 REFER TO PIPE NOTES.
- C4 INSTALL 10' CITY STD CURB INLET. TOP=715.67, INV=712.67
- C5 INSTALL 188 LF OF 12"Ø PIPE. CONNECT TO INLET C2 @ INV=711.37 REFER TO PIPE NOTES.
- C6 INSTALL 3'x3' AREA INLET. RIM=714.67, INV=712.37 REFER TO DETAIL 3/C1.
- C7 INSTALL 102 LF OF 12"Ø PIPE. REFER TO PIPE NOTES.
- C8 INSTALL 4'x4' AREA INLET RIM=719.57, INV=717.17. REFER TO DETAIL 3/C1.
- C9 INSTALL 10 LF OF 12"Ø PIPE. REFER TO PIPE NOTES.
- C10 INSTALL 10' CITY STD CURB INLET. TOP(W)=719.87, TOP(E)=720.67, INV=716.87.
- C11 INSTALL 46 LF OF RETAINING WALL. REFER TO STRUCTURAL PLANS.
- C12 REFER TO DETAIL 6/C1 FOR PROFILE OF STORM SEWER CONNECTION & UTILITY CROSSING OF STORM SEWER AND SANITARY SEWER LATERAL.
- C13 PROPOSED STORMWATER SYSTEM. REFER TO ASH STREET RECONSTRUCTION PLANS, C.I.P. P-201401-01, BY HALFF ASSOCIATES, INC. FOR FINAL LOCATION.

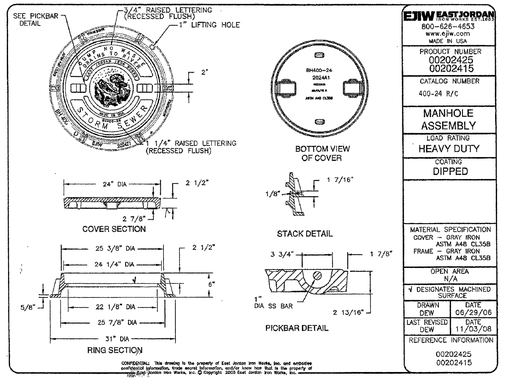

5 7 JUNCTION BOX & LID DETAILS
SCALE: NOT TO SCALE

SITE EXCAVATION REQUIREMENTS:
1. A GEOTECHNICAL ANALYSIS HAS BEEN PERFORMED ON THIS SITE. REFER TO PROJECT MANUAL.
2. FOLLOW GEOTECHNICAL ANALYSIS RECOMMENDATION FOR SITE EXCAVATION.
3. REFER TO STRUCTURAL DRAWINGS FOR BUILDING EXCAVATION REQUIREMENTS.

WORK SHALL BE IN ACCORDANCE WITH THE GEOTECHNICAL REPORT BY CARDNO ATC, DATED NOVEMBER 18, 2013.

RECORD DRAWINGS
THESE RECORD DRAWINGS HAVE BEEN PREPARED BASED ON INFORMATION PROVIDED BY OTHERS. ANDERSON ENGINEERING, INC. HAS NOT VERIFIED THE ACCURACY AND/OR COMPLETENESS OF THIS INFORMATION. UNLESS OTHERWISE NOTED ON THESE DOCUMENTS. ANDERSON ENGINEERING, INC. SHALL NOT BE RESPONSIBLE FOR ANY ERRORS OR OMISSIONS THAT MAY BE INCORPORATED AS A RESULT OF ERRONEOUS INFORMATION PROVIDED BY OTHERS.
ANDERSON ENGINEERING, INC.
BY:
DATE:

SYMBOLS LEGEND
REFER TO SURVEY (SV1) FOR EXISTING CONDITION SYMBOLS LEGEND AND SITE CONTROL.

---720---	EXISTING GRADE LINES	+ 440.5 PVT	NEW SPOT ELEVATIONS
—720—	PROPOSED NEW GRADE LINES		LIST / ABBREVIATION: GRADE NONE; SIDEWALK SW; TOP OF WALL TW; TOP OF CURB TC; TOP OF PAVEMENT PVT; NEW GRADE GD; CONCRETE CONC; EXISTING TOP OF CURB ETC; EXISTING GRADE EGD; EXISTING PAVEMENT EPVT; EXISTING SIDEWALK ESW; FLOW LINE FL; TOP OF BERM TOP
	NEW BUILDING CONSTRUCTION		
	NEW MONUMENT SIGN LOCATION		
	PAVING BLOCK NEW CONCRETE		
	SURFACE FLOW ARROW		
—>—	DRAINAGE SWALE		

BENCHMARK:
"TXMN" - A SMARTNET NORTH AMERICA CONTINUOUSLY OPERATING REFERENCE STATION - AN EPOXED STAINLESS ASSEMBLY LOCATED IN THE TOP OF A MASONRY WALL AT POGUE ENGINEERING AND DEVELOPMENT COMPANY, LOCATED AT 1512 BRAY CENTRAL DRIVE, SUITE 100, MCKINNEY, TEXAS ELEVATION: 664.60 (NAVD88, CORS ADJ.)

TEMPORARY BENCHMARK:
LOCATION:"X" IN CONCRETE ON THE TOP OF A STORM INLET INLET ON THE WEST SIDE OF STATE HIGHWAY 289 (PRESTON ROAD) APPROXIMATELY 100' NORTH OF THE THE INTERSECTION WITH EAST ASH STRET.
ELEVATION: 726.63

STATE OF TEXAS
NEIL S. BRADY
88745
LICENSED
4-8-15

SHEETS BEARING THIS SEAL ARE AUTHENTICATED, RESPONSIBILITY FOR ALL OTHER PLANS, SPECIFICATIONS OR INSTRUMENTS ARE DISCLAIMED.

O'Reilly AUTO PARTS
CORPORATE OFFICES
233 SOUTH PATTERSON
SPRINGFIELD, MISSOURI 65802
(417) 862-2674 TELEPHONE

PROJECT:
NEW O'REILLY AUTO PARTS STORE
S.H. 289 (PRESTON ROAD) & E. ASH STREET
CELINA, TEXAS

SITE GRADING PLAN

MO ANDERSON ENGINEERING, INC
ENGINEERS • SURVEYORS • LABORATORIES • DRILLING
2045 W. WOODLAND • SPRINGFIELD, MISSOURI 65807• PHONE (417) 866-2741
ANDERSON CO# F-3704 • NEIL S BRADY, PE# 88145

PROJ #	DRAWING #	BY:	CKD:
10178-14	WB-110-061	ATH	NSB

DRAWN BY: AH
CHECKED BY: NB
DATE: 10/27/14
REVISION: 04/06/15 P1-PROPOSAL REQUEST #1
PROJECT NUMBER: CEA
SHEET NUMBER 7 of 14

P-201406-01

COPYRIGHT 2014 – DESIGNS, DRAWINGS AND SPECIFICATIONS ARE INSTRUMENTS OF SERVICE AND ARE THE PROPERTY OF THE DESIGN PROFESSIONAL. REPRODUCTION PROHIBITED WITHOUT THE EXPRESSED WRITTEN CONSENT OF THE DESIGN PROFESSIONAL. ©

SEEDING SPECIFICATIONS

CULTIPACK SEEDING SPECIFICATIONS

Winter Rye Seed (Fall & Winter)	65 lb/acre	(1.5 lbs/1000 sq. ft.)
Common Bermuda Seed (Spring & Summer)	65 lb/acre	(1.5 lbs/1000 sq. ft.)
17/17/17 Fertilizer	380 lb/acre	(9 lbs/1000 sq. ft.)

HYDROMULCH SEEDING SPECIFICATIONS

Winter Rye Seed (Fall & Winter)	65 lb/acre	(1.5 lbs/1000 sq. ft.)
Common Bermuda Seed (Spring & Summer)	65 lb/acre	(1.5 lbs/1000 sq. ft.)
17/17/17 Fertilizer	380 lb/acre	(9 lbs/1000 sq. ft.)
Wood Cellulose Mulch Fiber	2000 lb/acre	(50 lbs/1000 sq. ft.)
Biodegradable Tackifier	65 lb/acre	(1.5 lbs/1000 sq. ft.)

Note: Soil to be seeded shall be chain harrowed or chain dragged prior to seeding. After seeding, these areas shall be maintained until grass is established and approved by Operator.

STAGES OF CONSTRUCTION:

1. *CONTRACTOR TO PERFORM DETAILED SITE INSPECTION TO LOCATE ALL EXISTING UTILITIES AND VERIFY ANY POSSIBLE CONFLICTS WITH PROPOSED IMPROVEMENTS PRIOR TO BEGINNING ANY CONSTRUCTION. CONTACT OWNER WITH ANY CONFLICTS. MONTH 1*
2. *INSTALLATION OF CONSTRUCTION ENTRANCE. MONTH 1*
3. *INSTALLATION OF EROSION CONTROL FENCE. MONTH 1*
4. *DEMOLITION OF EXISTING SITE IMPROVEMENTS. MONTH 1*
5. *REMOVAL OF EXISTING PAVEMENT ON THE SITE. MONTH 1*
6. *INSTALLATION OF ALL STORMWATER DRAINAGE IMPROVEMENTS. MONTH 1*
7. *ROUGH GRADING. MONTH 1 & MONTH 2*
8. *CONSTRUCTION OF NEW SITE IMPROVEMENTS. MONTH 2*
9. *FINAL GRADING. MONTH 3*
10. *PLACEMENT OF FINAL LANDSCAPING ITEMS AND SOD. MONTH 3*
11. *REMOVAL OF EROSION CONTROL FENCE. MONTH 3*

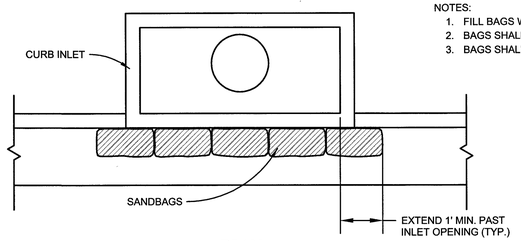

NOTES:
1. FILL BAGS WITH 5/8" CRUSHED LIMESTONE.
2. BAGS SHALL BE BURLAP OR BIODEGRADABLE PLASTIC.
3. BAGS SHALL BE INSPECTED AND REPLACED AS NEEDED.

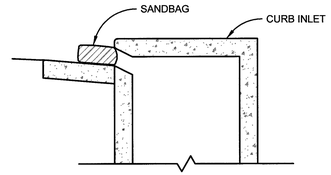

2 CURB INLET SEDIMENT FILTER
8 SCALE:NOT TO SCALE

LAND DISTURBANCE SUMMARY:

TOTAL PROPERTY AREA= 1.06 ACRES
TOTAL DISTURBED AREA=1.70 ACRES > 1.0 ACRES, THEREFORE CSN IS REQUIRED

CONTRACTOR SHALL POLICE SITE REGULARLY AND KEEP SITE FREE OF TRASH AND CONSTRUCTION DEBRIS. CONTRACTOR IS REQUIRED TO REPAIR AND/OR REPLACE DAMAGED EROSION CONTROL DEVICES.

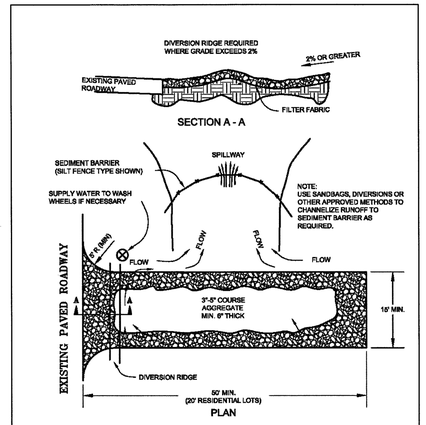

TEMPORARY STONE CONSTRUCTION ENTRANCE / EXIT
N.T.S.

3 TEMPORARY CONSTRUCTION EGRESS
8 SCALE:NOT TO SCALE

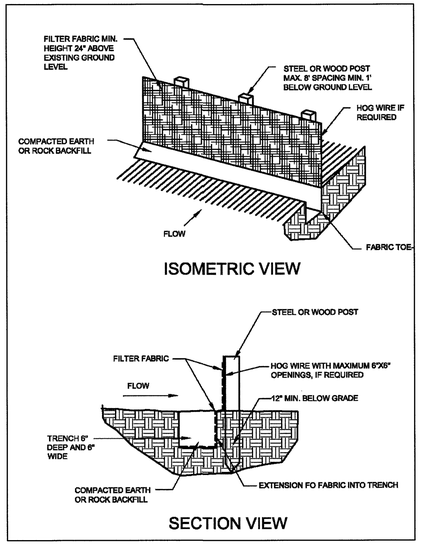

4 TEMPORARY SILT FENCE
8 SCALE:NOT TO SCALE

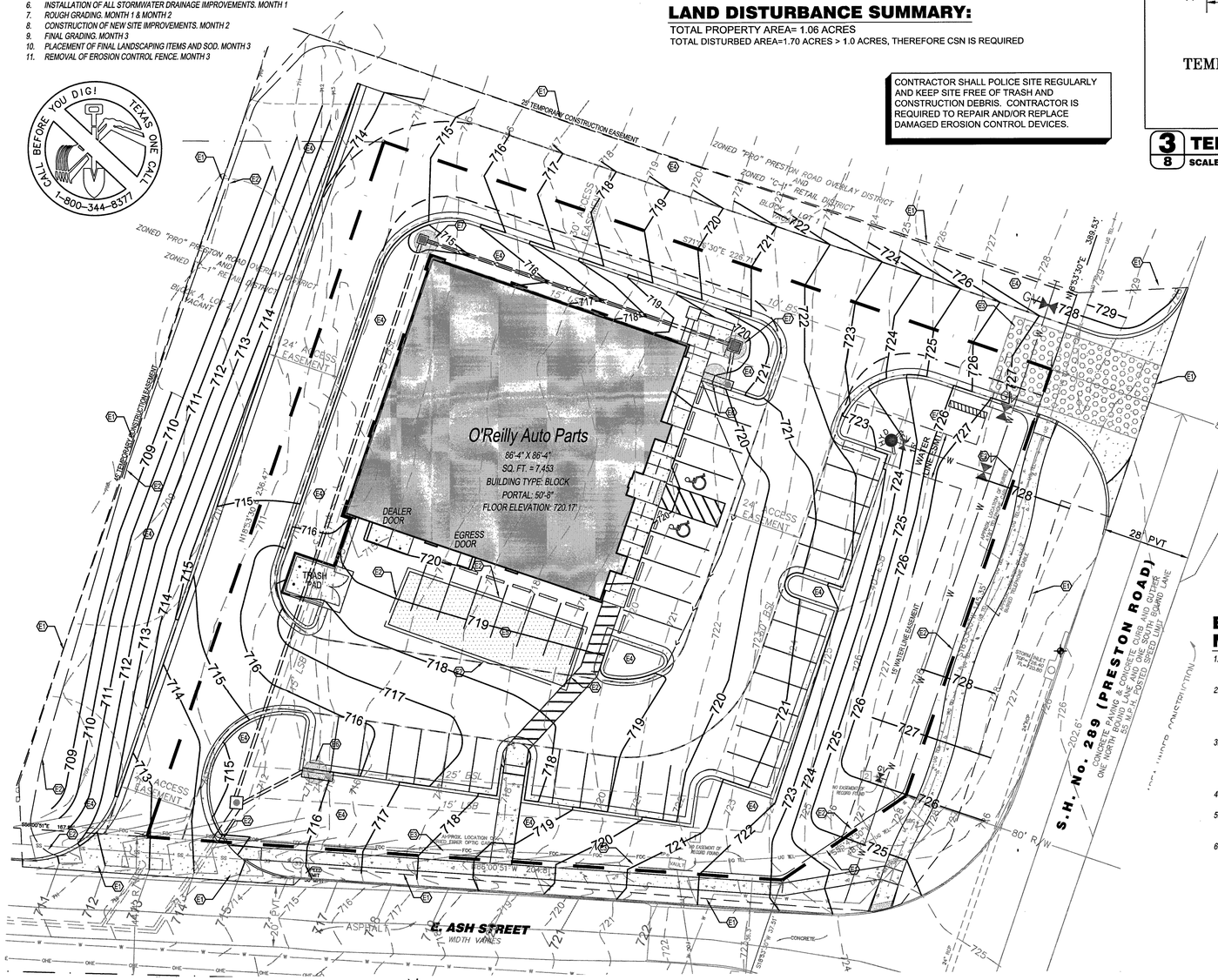

1 EROSION CONTROL PLAN
8 SCALE: 1" = 20'

HORIZONTAL SCALE
20 0 10 20 40 80
(IN FEET)
1 inch = 20 ft.

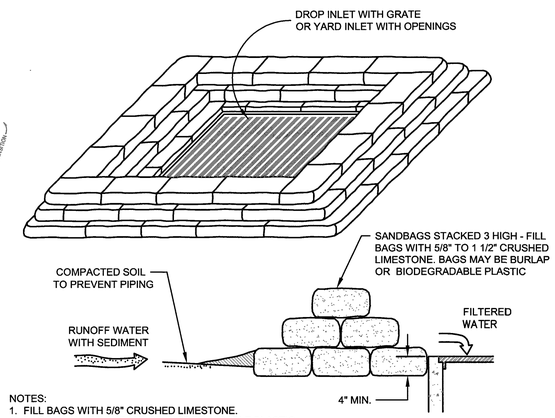

NOTES:
1. FILL BAGS WITH 5/8" CRUSHED LIMESTONE.
2. BAGS SHALL BE BURLAP OR BIODEGRADABLE PLASTIC.
3. BAGS SHALL BE INSPECTED AND REPLACED AS NEEDED.

5 AREA INLET SEDIMENT FILTER
8 SCALE:NOT TO SCALE

RECORD DRAWINGS

THESE RECORD DRAWINGS HAVE BEEN PREPARED BASED ON INFORMATION PROVIDED BY OTHERS. ANDERSON ENGINEERING, INC. HAS NOT VERIFIED THE ACCURACY AND/OR COMPLETENESS OF THIS INFORMATION. UNLESS OTHERWISE NOTED ON THESE DOCUMENTS, ANDERSON ENGINEERING, INC. SHALL NOT BE RESPONSIBLE FOR ANY ERRORS OR OMISSIONS THAT MAY BE INCORPORATED AS A RESULT OF ERRONEOUS INFORMATION PROVIDED BY OTHERS.

ANDERSON ENGINEERING, INC.
BY:
DATE: 11-14-14

EROSION CONTROL & MAINTENANCE PLAN NOTES:

1. *RETAIN FLOATABLE WIND BLOWN MATERIALS ON SITE BY STORING ALL TRASH AND BUILDING MATERIAL WASTE IN ENCLOSURES UNTIL PROPER DISPOSAL AT OFF-SITE FACILITIES. CHECK ADJACENT AREAS DAILY AND PICK UP CONSTRUCTION WASTE MATERIALS AND DEBRIS THAT HAVE BLOWN OR WASHED OFF SITE.*
2. *PERMANENTLY STABILIZE ALL SURFACE AREA WITHIN AND ADJACENT TO THIS SITE THAT IS DISTURBED BY VEHICLES, GRADING AND OTHER CONSTRUCTION FOR THE PROPOSED FACILITY. STABILIZATION IS OBTAINED WHEN THE DISTURBED SURFACE IS COVERED WITH STRUCTURES, PAVING AND OR PERENNIAL VEGETATION HAVING A UNIFORM COVERAGE DENSITY OF AT LEAST 70%. STABILIZATION OF ALL DISTURBED AREA IS REQUIRED BEFORE TERMINATING MAINTENANCE AND REMOVAL OF EROSION CONTROL MEASURES.*
3. *CONTRACTORS SHALL INSPECT POLLUTION CONTROL MEASURES AT LEAST ONCE EVERY 7 DAYS AND WITHIN 24 HOURS AFTER A STORM EVENT OF 1/2 INCH OR GREATER DURING ACTIVE CONSTRUCTION ACTIVITIES. DAMAGED MEASURES THAT PROVE TO BE INEFFECTIVE SHALL BE REPLACED WITH MORE EFFECTIVE MEASURES OR ADDITIONAL MEASURES WITHIN SEVEN DAYS. REPEATED FAILURE OF A CONTROL MEASURE REQUIRES INSTALLATION OF A MORE SUITABLE DEVICE TO PREVENT DISCHARGE OF POLLUTANTS FROM THE CONSTRUCTION SITE.*
4. *INSTALLATION OF ADDITIONAL EROSION CONTROL MEASURES MAY BE REQUIRED BY THE CITY OR STATE. CONTRACTOR TO VERIFY REQUIREMENTS PRIOR TO BEGINNING ANY WORK ON PROJECT SITE.*
5. *CARE SHALL BE TAKEN TO MINIMIZE THE ENCROACHMENT OF SEDIMENT INTO ALL STORM DRAIN APPURTENANCES, PUBLIC STREETS, AND ONTO PRIVATE PROPERTY UNTIL IMPERVIOUS MATERIAL (ROAD/PARKING AREA SURFACE) IS APPLIED OR UNTIL PROPOSED LANDSCAPE HAS BEEN ESTABLISHED.*
6. *ALL GRASS SLOPES WHICH EXCEED 3:1 (H:V) SHALL UTILIZE CONTECH CONSTRUCTION PRODUCTS PERMANENT TURF REINFORCEMENT MATS TRM 450 OR APPROVED EQUAL. MATS SHALL BE INSTALLED PER MANUFACTURER'S SPECIFICATIONS AND STANDARDS. CONTRACTOR SHALL COORDINATE INSTALLATION INSPECTION WITH MANUFACTURER.*

EROSION GRADING KEY NOTES:

- E1 *LIMITS OF DISTURBED AREA.*
- E2 *LIMITS OF TEMPORARY SILT FENCE. SEE DETAIL 4 ON SHEET 8.*
- E3 *INSTALL TEMPORARY STONE CONSTRUCTION ENTRANCE/EXIT. SEE DETAIL 3 ON SHEET 8.*
- E4 *AREA TO BE SEEDED PER SEEDING SPECIFICATIONS THIS SHEET.*
- E5 *TOPSOIL STOCKPILE AREA.*
- E6 *INSTALL CURB INLET SEDIMENT FILTER. SEE DETAIL 2 ON SHEET 8.*
- E7 *INSTALL AREA INLET SEDIMENT FILTER. SEE DETAIL 5 ON SHEET 8.*

BMP MAINTENANCE SCHEDULE

BMP	MAINTENANCE FREQUENCY:	RESPONSIBLE PARTY:
TEMPORARY STONE CONSTRUCTION ENTRANCE/EXIT	WEEKLY AND AFTER 0.5" OR GREATER RAIN STORM EVENTS	CONTRACTOR
SILT FENCE	WEEKLY AND AFTER 0.5" OR GREATER RAIN STORM EVENTS	CONTRACTOR

BMP LEGEND

— — — —	*LIMITS OF DISTURBED AREA*
—○—	*TEMPORARY EROSION CONTROL FENCE*
	TEMPORARY STONE CONSTRUCTION ENTRANCE/EXIT
●	*INLET SEDIMENT FILTER*

STATE OF TEXAS
NEIL S. BRADY
88145
LICENSED PROFESSIONAL ENGINEER
10-27-14

SHEETS BEARING THIS SEAL ARE AUTHENTICATED, RESPONSIBILITY FOR ALL OTHER PLANS, SPECIFICATIONS OR INSTRUMENTS ARE DISCLAIMED.

O'Reilly AUTO PARTS
CORPORATE OFFICES
233 SOUTH PATTERSON
SPRINGFIELD, MISSOURI 65802
(417) 862-2674 TELEPHONE

PROJECT:
NEW O'REILLY AUTO PARTS STORE
S.H. 289 (PRESTON ROAD) & E ASH STREET
CELINA, TEXAS

EROSION CONTROL PLAN

MO ANDERSON ENGINEERING, INC
ENGINEERS • SURVEYORS • LABORATORIES • DRILLING
2045 W. WOODLAND • SPRINGFIELD, MISSOURI 65807 • PHONE (417) 866-2741
ANDERSON COM# F-2074 • NEIL S BRADY, PE# 88145

PROJ # 10178-14	DRAWING # WB-110-061
BY: ATH	CKD: NSB

DRAWN BY: AH
CHECKED BY: NB
DATE: 10/27/14
REVISION:
PROJECT NUMBER: CEA
SHEET NUMBER 8 of 14

P-201406-01

© COPYRIGHT 2014 – DESIGNS, DRAWINGS AND SPECIFICATIONS ARE INSTRUMENTS OF SERVICE AND ARE THE PROPERTY OF THE DESIGN PROFESSIONAL. REPRODUCTION PROHIBITED WITHOUT THE EXPRESSED WRITTEN CONSENT OF THE DESIGN PROFESSIONAL.

1 / **9** **DRAINAGE AREA MAP**
SCALE: 1" = 20'

SYMBOLS LEGEND

-----723-----	EXISTING 1-FOOT GRADE LINES
———723———	PROPOSED 1-FOOT GRADE LINES
———>———	DRAINAGE SWALE
←	DRAINAGE FLOW ARROW

DRAINAGE AREA SUMMARY:

TOTAL DRAINAGE AREA = 1.06 ACRES
AREA OF PAVEMENT = 0.47 ACRES
ROOF AREA = 0.17 ACRES
TOTAL IMPERVIOUS AREA = 0.64 ACRES
PERVIOUS AREA = 0.42 ACRES

RUNOFF CALCULATIONS:

TOTAL DRAINAGE AREA
Q100 = C i A
C=RUNOFF COEFFICIENT = 0.90
i100 = RAINFALL INTENSITY (Tc=10 MIN) = 8.74 in/hr
A = DRAIANGE AREA = 1.06 AC
Q100 = 8.34 CFS

SUB-AREA #1
Q100 = C i A
C=RUNOFF COEFFICIENT = 0.90
i100 = RAINFALL INTENSITY (Tc=10 MIN) = 8.74 in/hr
A = DRAIANGE AREA = 0.15 AC
Q100 = 1.18 CFS

SUB-AREA #2
Q100 = C i A
C=RUNOFF COEFFICIENT = 0.90
i100 = RAINFALL INTENSITY (Tc=10 MIN) = 8.74 in/hr
A = DRAIANGE AREA = 0.45 AC
Q100 = 3.54 CFS

SUB-AREA #3
Q100 = C i A
C=RUNOFF COEFFICIENT = 0.90
i100 = RAINFALL INTENSITY (Tc=10 MIN) = 8.74 in/hr
A = DRAIANGE AREA = 0.13 AC
Q100 = 1.02 CFS

SUB-AREA #4
Q100 = C i A
C=RUNOFF COEFFICIENT = 0.90
i100 = RAINFALL INTENSITY (Tc=10 MIN) = 8.74 in/hr
A = DRAIANGE AREA = 0.16 AC
Q100 = 1.25 CFS

TOTAL DRAINAGE AREA TO ASH STREET = TOTAL AREA - SUB AREA #3 = 0.93 ACRES
TOTAL RUNOFF TO ASH STREET = TOTAL ARA - SUB AREA #3 = 8.34 CFS - 1.02 CFS = 7.32 CFS

RECORD DRAWINGS

THESE RECORD DRAWINGS HAVE BEEN PREPARED BASED ON INFORMATION PROVIDED BY OTHERS. ANDERSON ENGINEERING, INC. HAS NOT VERIFIED THE ACCURACY AND/OR COMPLETENESS OF THIS INFORMATION. UNLESS OTHERWISE NOTED ON THESE DOCUMENTS. ANDERSON ENGINEERING, INC. SHALL NOT BE RESPONSIBLE FOR ANY ERRORS OR OMISSIONS THAT MAY BE INCORPORATED AS A RESULT OF ERRONEOUS INFORMATION PROVIDED BY OTHERS.

ANDERSON ENGINEERING, INC.
BY:
DATE: 11-19-14

STATE OF TEXAS
NEIL S. BRADY
88145
LICENSED PROFESSIONAL ENGINEER
10-27-14

SHEETS BEARING THIS SEAL ARE AUTHENTICATED. RESPONSIBILITY FOR ALL OTHER PLANS, SPECIFICATIONS OR INSTRUMENTS ARE DISCLAIMED.

O'Reilly AUTO PARTS
CORPORATE OFFICES
233 SOUTH PATTERSON
SPRINGFIELD, MISSOURI 65802
(417) 862-2674 TELEPHONE

PROJECT:
NEW O'REILLY AUTO PARTS STORE
S.H. 289 (PRESTON ROAD) & E ASH STREET
CELINA, TEXAS

DRAINAGE AREA MAP

MO ANDERSON ENGINEERING, INC
ENGINEERS • SURVEYORS • LABORATORIES • DRILLING
2046 W. WOODLAND • SPRINGFIELD, MISSOURI 65807 • PHONE (417) 865-2741
ANDERSON.CO.US# 5700A • NEIL S BRADY, CE# 88145

PROJ #	DRAWING #	BY: ATH
10178-14	WB-110-061	CKD: NSB

DRAWN BY:	CHECKED BY:
AH	NB

DATE: 10/27/14
REVISION:
PROJECT NUMBER: CEA
SHEET NUMBER
9 of 14

P-201406-01

COPYRIGHT 2014 — DESIGNS, DRAWINGS AND SPECIFICATIONS ARE INSTRUMENTS OF SERVICE AND ARE THE PROPERTY OF THE DESIGN PROFESSIONAL. REPRODUCTION PROHIBITED WITHOUT THE EXPRESSED WRITTEN CONSENT OF THE DESIGN PROFESSIONAL. ©

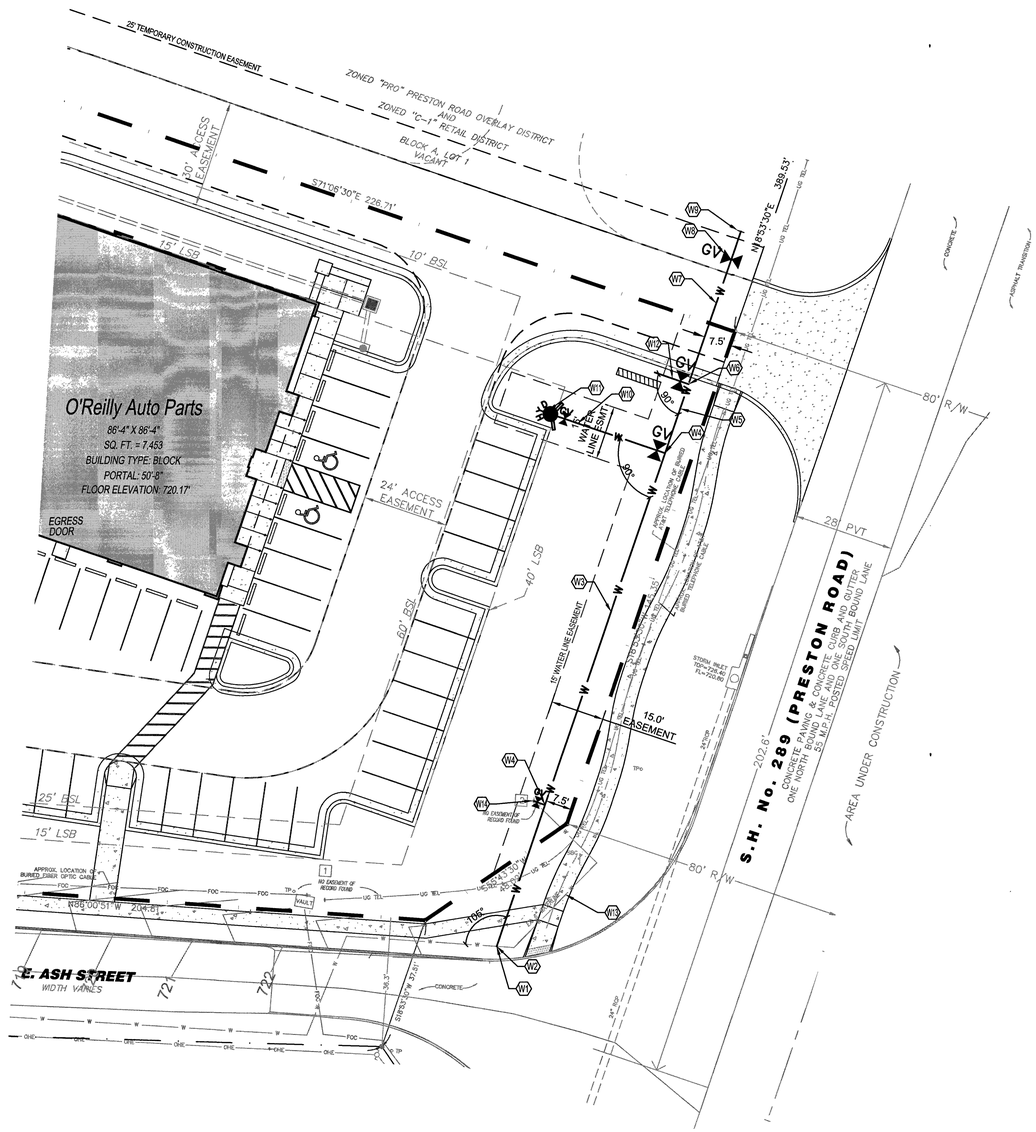

1/10 WATER MAIN EXTENSION PLAN

SCALE: 1" = 20'

N

KEY NOTES:

- **W1** PRIOR TO BEGINNING CONSTRUCTION, CONTRACTOR TO POTHOLE EXISTING WATER LINE TO VERIFY THE PROPOSED CONNECTION FITTING(S) WILL FUNCTION AS DESIGNED. CO-ORDINATE ANY REQUIRED CHANGES TO THE PROPOSED DESIGN WITH THE CITY INSPECTOR.
- **W2** CONNECT NEW 12"Ø WATER MAIN TO EXISTING 6"Ø WATER MAIN.
- **W3** INSTALL 115 LF OF 12" C900 WATER PIPE PER CITY STANDARDS.
- **W4** INSTALL 6"x12"x12" TEE, 6" GATE VALVE & CONCRETE THRUST BLOCK PER CITY STANDARDS.
- **W5** INSTALL 21 LF OF 12" C900 WATER PIPE PER CITY STANDARDS.
- **W6** INSTALL 6"x12"x12" TEE, 6" GATE VALVE & CONCRETE THRUST BLOCK FOR DOMESTIC WATER & FIRE SERVICE CONNECTION PER CITY STANDARDS.
- **W7** INSTALL 37 LF OF 12" C900 WATER PIPE PER CITY STANDARDS.
- **W8** INSTALL 12" GATE VALVE & CONCRETE THRUST BLOCK PER CITY STANDARDS.
- **W9** EXTEND 12" C900 WATER PIPE 8 LF PAST GATE VALVE PER CITY STANDARDS. INSTALL DEAD END ASSEMBLY & CONCRETE THRUST BLOCK PER CITY STANDARDS.
- **W10** INSTALL 27 LF OF 6" C900 WATER PIPE PER CITY STANDARDS.
- **W11** INSTALL FIRE HYDRANT PER CITY STANDARDS.
- **W12** INSTALL 10 LF OF 6" C900 WATER PIPE FOR DOMESTIC WATER & FIRE SERVICE PER CITY STANDARDS. REFER TO SITE UTILITY PLAN FOR CONTINUATION.
- **W13** EXISTING 6" WATER MAIN TO BE REMOVED.
- **W14** CONNECT EXISTING FIRE HYDRANT TO PROPOSED 12" C900 WATER MAIN.

PIPES NOTES:

1. PIPE MATERIALS SHALL BE IN ACCORDANCE WITH AND AS APPROVED BY THE CITY.
2. ALL PIPE IS TO BE INSTALLED PER CITY STANDARD REQUIREMENTS AND MEET COVER REQUIREMENTS PER THE CITY OF CELINA.

WATER LINE NOTES:

1. WATER MAIN EXTENSION SHALL BE INSTALLED IN ACCORDANCE WITH THE LATEST EDITION OF THE CITY OF CELINA STANDARDS.
2. WATER MAINS SHALL BE INSTALLED WITH NO LESS THAN FORTY-TWO INCHES (42") AND NO MORE THAN SEVENTY-TWO INCHES (72") FINISHED COVER.
3. WATER MAINS SHALL BE LOCATED A MINIMUM HORIZONTAL DISTANCE OF TEN FEET (10') FROM BUILDINGS AND SANITARY SEWER MAINS AND A MINIMUM HORIZONTAL DISTANCE OF FIVE FEET (5') FROM ALL OTHER UTILITIES.
4. WHEN CROSSING, WATER MAINS SHALL BE LOCATED A MINIMUM VERTICAL DISTANCE OF EIGHTEEN INCHES (18") ABOVE SANITARY SEWER MAINS AND A MINIMUM VERTICAL DISTANCE OF TWELVE INCHES (12") FROM ALL OTHER UTILITIES.

HORIZONTAL SCALE

20 0 10 20 40 80

(IN FEET)
1 inch = 20 ft.

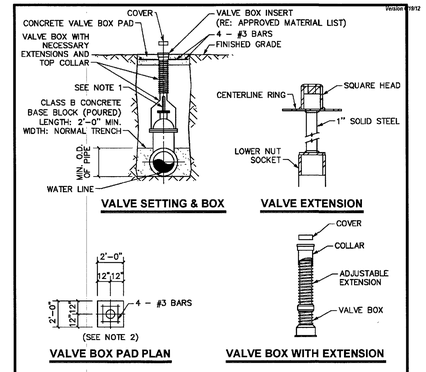

NOTES:

1. A VALVE EXTENSION STEM SHALL BE REQUIRED FOR ANY VALVE WHOSE OPERATING NUT IS LOCATED IN EXCESS OF 4' BELOW THE TOP OF VALVE BOX. THIS EXTENSION SHALL BE OF SUFFICIENT LENGTH TO INSURE THAT ITS TOP IS WITHIN 2' OF THE VALVE BOX COVER.
2. CONCRETE PAD 24" SQUARE SHALL BE POURED AROUND ALL VALVE BOXES NOT PLACED WITHIN CONCRETE PAVEMENT. CLASS A CONCRETE, 6" THICK.
3. REFER TO TECHNICAL SPECIFICATION 331217.

FRISCO PROGRESS IN MOTION	STANDARD CONSTRUCTION DETAIL	SCALE: 1/4"=1'-0"
	GATE VALVE	REVISED: MAR 2012
		W07

RECORD DRAWINGS

THESE RECORD DRAWINGS HAVE BEEN PREPARED BASED ON INFORMATION PROVIDED BY OTHERS. ANDERSON ENGINEERING, INC. HAS NOT VERIFIED THE ACCURACY AND/OR COMPLETENESS OF THIS INFORMATION. UNLESS OTHERWISE NOTED ON THESE DOCUMENTS, ANDERSON ENGINEERING, INC. SHALL NOT BE RESPONSIBLE FOR ANY ERRORS OR OMISSIONS THAT MAY BE INCORPORATED AS A RESULT OF ERRONEOUS INFORMATION PROVIDED BY OTHERS.

ANDERSON ENGINEERING, INC.
BY:
DATE: 11-14-14

BENCHMARK:

"TXMK" - A SMARTNET NORTH AMERICA CONTINUOUSLY OPERATING REFERENCE STATION - AN EPOXIED STAINLESS ASSEMBLY LOCATED IN THE TOP OF A MASONRY WALL AT POGUE ENGINEERING AND DEVELOPMENT COMPANY, LOCATED AT 1512 BRAY CENTRAL DRIVE, SUITE 100, MCKINNEY, TEXAS

ELEVATION: 664.60 (NAVD88, CORS ADJ.)

TEMPORARY BENCHMARK:

LOCATION:"X" IN CONCRETE ON THE TOP OF A STORM INLET INLET ON THE WEST SIDE OF STATE HIGHWAY 289 (PRESTON ROAD) APPROXIMATELY 100' NORTH OF THE THE INTERSECTION WITH EAST ASH STRET.

ELEVATION: 726.63

CALL TEXAS ONE CALL BEFORE YOU DIG! 1-800-344-8377

STATE OF TEXAS
NEIL S. BRADY
88145
LICENSED PROFESSIONAL ENGINEER
10-27-14

SHEETS BEARING THIS SEAL ARE AUTHENTICATED. RESPONSIBILITY FOR ALL OTHER PLANS, SPECIFICATIONS OR INSTRUMENTS ARE DISCLAIMED.

O'Reilly AUTO PARTS
CORPORATE OFFICES
233 SOUTH PATTERSON
SPRINGFIELD, MISSOURI 65802
(417) 862-2674 TELEPHONE

PROJECT:
NEW O'REILLY AUTO PARTS STORE
S.H. 289 (PRESTON ROAD) & E. ASH STREET
CELINA, TEXAS

WATER MAIN EXTENSION PLAN

MO ANDERSON ENGINEERING, INC
ENGINEERS • SURVEYORS • LABORATORIES • DRILLING
2045 W. WOODLAND • SPRINGFIELD, MISSOURI 65807 • PHONE (417) 866-2741
ANDERSON COA# E-3074 • NEIL S BRADY, PE# 88145

PROJ #	DRAWING #	BY: ATH
10178-14	WB-110-061	CKD: NSB

DRAWN BY:	CHECKED BY:
AH	NB

DATE: 10/27/14

REVISION:

PROJECT NUMBER: CEA

SHEET NUMBER
10 of 14

P-201406-01

© COPYRIGHT 2014 – DESIGNS, DRAWINGS AND SPECIFICATIONS ARE INSTRUMENTS OF SERVICE AND ARE THE PROPERTY OF THE DESIGN PROFESSIONAL. REPRODUCTION PROHIBITED WITHOUT THE EXPRESSED WRITTEN CONSENT OF THE DESIGN PROFESSIONAL.

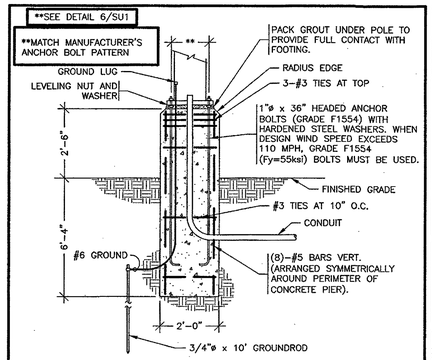

CONCRETE POLE BASE DETAIL

N.T.S. (2 / SU1)

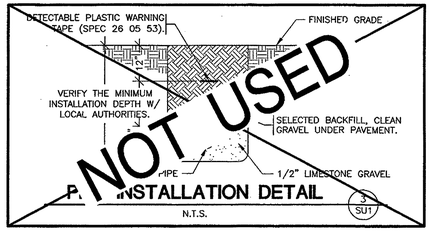

P. INSTALLATION DETAIL

N.T.S. (3 / SU1)

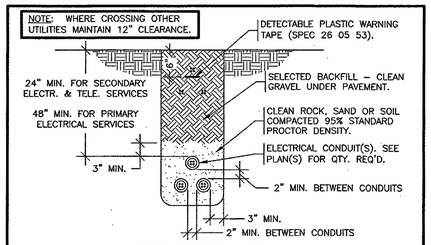

UNDERGROUND ELECTRICAL CONDUITS

N.T.S. (4 / SU1)

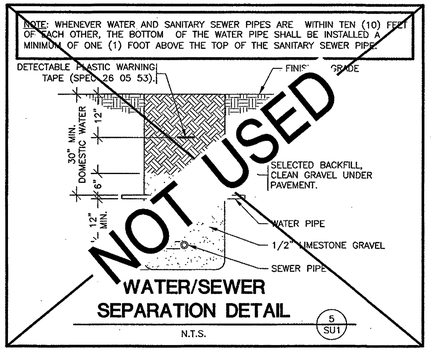

WATER/SEWER SEPARATION DETAIL

N.T.S. (5 / SU1)

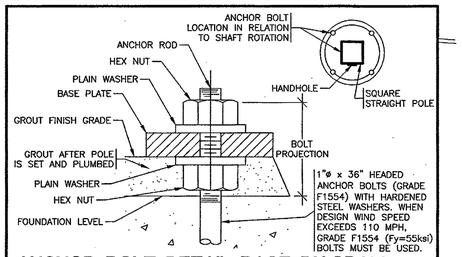

ANCHOR BOLT DETAIL BASE DIAGRAM

N.T.S. (6 / SU1)

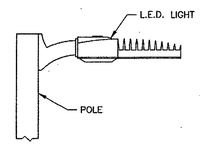

L.E.D. LIGHT MOUNTING DETAIL

N.T.S. (1 / SU1)

GENERAL NOTE:

PRIOR TO INSTALLATION, GENERAL CONTRACTOR SHALL CONFIRM THAT LIGHT POLES, LANDSCAPING AND UTILITIES DO NOT CONFLICT WITH SIGN LOCATION SHOWN. IF ANY POTENTIAL CONFLICT IS DISCOVERED, GENERAL CONTRACTOR SHALL CONTACT THE O'REILLY PROJECT ADMINISTRATOR BEFORE PROCEEDING.

VENSTAR KEYNOTE

(1) VIA VENSTAR SURVEYOR / LIGHTING CONTROL PANEL. SEE SHEET VS1 & VENSTAR SCOPE OF WORK (S.O.W.)

EXISTING CONDITIONS NOTES

1. THE CONTRACTOR IS OBLIGATED TO INSPECT FOR EXISTING CONDITIONS/INSTALLATIONS AND AVAILABLE INFORMATION PRIOR TO SUBMITTING A BID, REFER TO SPECIFICATIONS ALSO.
2. EXISTING INSTALLATIONS (SUCH AS WATER MAINS/LINES, GAS MAINS/LINES, SEWER MAINS/LINES, TELEPHONE LINES, POWER LINES, AND UTILITY STRUCTURES IN THE VICINITY OF THE WORK TO BE DONE) ARE INDICATED ON THE DRAWINGS ONLY TO THE EXTENT THAT SUCH INFORMATION HAS BEEN MADE AVAILABLE TO OR DISCOVERED BY THE ENGINEER IN PREPARING THE DRAWINGS. THERE IS NO GUARANTEE AS TO THE ACCURACY OR COMPLETENESS OF SUCH INFORMATION, AND ALL RESPONSIBILITY FOR THE ACCURACY AND COMPLETENESS THEREOF IS EXPRESSLY DISCLAIMED.
3. THE CONTRACTOR SHALL BE SOLELY RESPONSIBLE FOR LOCATING ALL EXISTING INSTALLATIONS.
4. ANY DELAY, ADDITIONAL WORK, FEES OR EXTRA COST TO THE CONTRACTOR CAUSED BY OR RESULTING FROM DAMAGE TO OR MODIFICATION OF EXISTING INSTALLATIONS BY THE CONTRACTOR OR AFFECTED UTILITY COMPANY SHALL NOT CONSTITUTE A CLAIM FOR EXTRA WORK, ADDITIONAL PAYMENT OR DAMAGES.
5. THE CONTRACTOR SHALL FIELD VERIFY ALL EXISTING CONSTRUCTION PRIOR TO SUBMITTING HIS BID. NO EXTRAS WILL BE PAID DUE TO UNANTICIPATED EXISTING CONDITIONS/INSTALLATIONS.

(1) TELEPHONE SERVICE REQUIREMENTS

SPECIAL NOTE: NEW PHONE SERVICE TO BUILDING SHALL BE AN UNDERGROUND SERVICE. CONTRACTORS TO SCHEDULE INSTALLATION OF U/G TELEPHONE SERVICE CONDUIT WITH OWNER. CONTACT (417) 874-7288.

2" PVC SCHEDULE 40 CONDUIT WITH RIGID GALVANIZED STEEL LONG SWEEP BENDS @ 18-24" DEPTH FOR PHONE SERVICE. PROVIDE MINIMUM 1/4" POLYPROPYLENE PULL LINE. PLACE CONDUIT A MINIMUM OF 12" FROM U/G ELECTRIC CONDUIT IN SAME TRENCH.

CAP END OF CONDUIT AT PROPERTY LINE BELOW FINISHED GRADE AND INSTALL CABLE MARKER FOR PHONE COMPANY, IF NECESSARY. OTHERWISE, CONTINUE PHONE SERVICE CONDUIT TO A POLE AND INSTALL RIGID GALVANIZED STEEL CONDUIT A MINIMUM 10' (ft.) ABOVE FINISHED GRADE ATTACHED TO POLE.

CONTRACTOR SHALL COORDINATE INSTALLATION AND VERIFY REQUIREMENTS WITH PHONE COMPANY, PLUS INCLUDE ALL FEES (IF ANY) BY PHONE COMPANY FOR INSTALLATION OF NO LESS THAN 10 PAIR CABLE, IN MENTIONED CONDUIT, TO CONTRACTOR INSTALLED 4' X 6' X 3/4" FIRE RETARDING BACKBOARD (IF PLYWOOD, PAINT BOARD W/FIRE RETARDING PAINT) WITHIN BUILDING. CONTRACTOR TO PROVIDE #6 AWG CU. GROUND TO TELEPHONE EQUIPMENT LOCATION FROM ELECTRICAL GROUNDING ELECTRODE SYSTEM. FINAL CONNECTIONS AND INSIDE PHONE WIRING BY OWNER.

ONLY IF UNDERGROUND PHONE SERVICE IS NOT AVAILABLE-THEN MAY CONTRACTOR INSTALL APPROPRIATE OVERHEAD PHONE SERVICE RISER, WEATHER HEAD, ETC. COORDINATE WITH OWNER & PHONE CO.

STATE OF TEXAS LIMITATION

I HEREBY CERTIFY THAT THESE ENGINEERING DOCUMENTS WERE PREPARED BY ME OR UNDER MY DIRECT PERSONAL SUPERVISION AND THAT I AM A DULY LICENSED PROFESSIONAL ENGINEER UNDER THE LAWS OF THE STATE OF TEXAS.

10/27/14
NORMAN E. GOTH (DATE)

LICENSE RENEWAL DATE IS SEPTEMBER 30, 2015

PAGES OR SHEETS COVERED BY THE SEAL: 11 AND 12

THE ABOVE-STATED DRAWINGS ARE VALID AND AUTHENTIC ONLY IF EACH COPIED SHEET BEARS THE SEAL, SIGNATURE, AND DATE AFFIXED TO THE ORIGINAL DRAWING BY THE ENGINEER.

THE AUTHORSHIP AND COPYRIGHT OF THE ABOVE STATED DRAWINGS AND SPECIFICATIONS REMAIN WITH SMITH-GOTH ENGINEERS INC. NO CHANGES BY OTHERS ARE AUTHORIZED. THEY ARE AN INSTRUMENT OF SERVICE AND ARE INTENDED FOR USE ON THE INDICATED PROJECT ONLY. THEY SHALL NOT BE REPRODUCED OR USED FOR ANY OTHER WORK WITHOUT THE WRITTEN PERMISSION OF THE ENGINEER.

CONTRACTOR CAUTION!!! VERIFY SEWER LINE ELEVATION

BEFORE STARTING ANY BUILDING PAD GRADING AND PLUMBING WORK, THE CONTRACTOR SHALL FIELD VERIFY LOCATION, MATERIAL, CONDITION, ACCESSIBILITY (INCLUDING STATE HIGHWAY OR OTHER RIGHTS-OF-WAY) AND WORKABLE FLOW LINE ELEVATION OF THE EXISTING SANITARY SEWER SERVICE LINE OR MAIN.

IF A WORKABLE FLOW LINE HAS NOT BEEN ESTABLISHED AT THE TIME OF FINAL SANITARY SEWER SERVICE CONNECTION, THEN THE CONTRACTOR SHALL BE RESPONSIBLE FOR ALL EXPENSES ASSOCIATED WITH THE INSTALLATION OF A NEW GRINDER PUMP SYSTEM EQUAL TO "ENVIRONMENT ONE" #DH152
PHONE: 518-346-6161 TO MEET OWNER AND LOCAL REQUIREMENTS.

NEW UTILITIES

WS	WATER SERVICE	P.O.C. = POINT OF CONNECTION BETWEEN SITE PIPING (SPEC 02700) AND BUILDING PIPING (SPEC 21 13 13, 22 00 00). AS NECESSARY – SPEC 21 13 13 DENOTES LANDSCAPE IRRIGATION).
UGE	UNDERGROUND ELECTRIC	
UGT	UNDERGROUND PHONE	
SAN	SANITARY SEWER	
OHE	OVERHEAD ELECTRIC	
OHT	OVERHEAD PHONE	
GS	GAS SERVICE (BY GAS CO.)	
	SAW CUT	
	BORE	
	GRAVEL	

UTILITIES CONTACTS:

ELECTRIC:	ONCOR, SHIRLEY LAPSLEY, 972-569-1285
TELEPHONE:	AT&T, MICHAEL REITZ, 972-569-4760
WATER:	CITY OF CELINA, DAVID STONE, 214-585-7142
SEWER:	CITY OF CELINA, ECTOR ARGUELLO, 972-685-2204

STOP-CALL BEFORE YOU DIG!

811

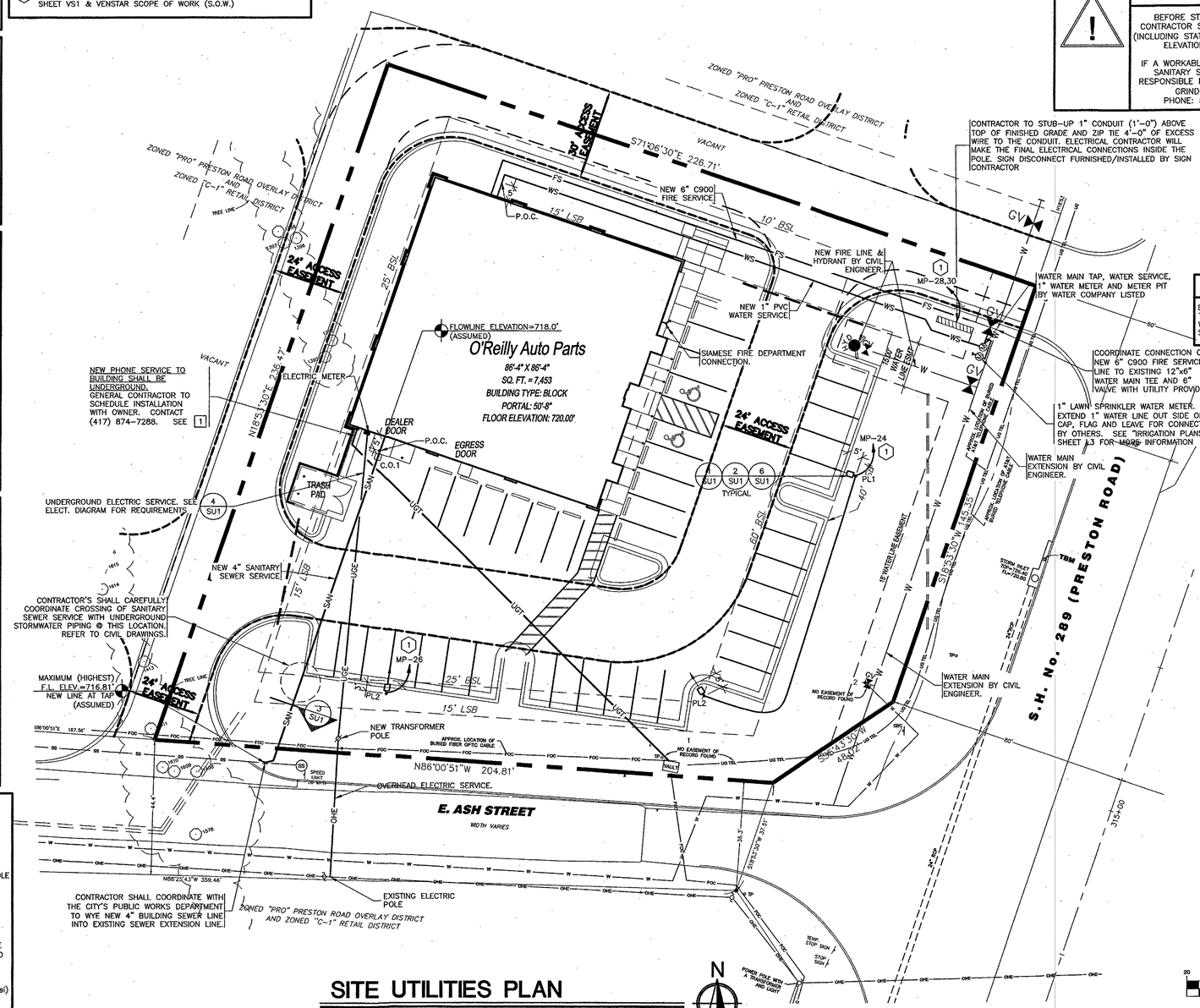

SITE UTILITIES PLAN

SCALE: 1" = 20'-0"

HORIZONTAL SCALE
20 0 10 20 40 80
(IN FEET)
1 inch = 20 ft.

RECORD DRAWINGS

THESE RECORD DRAWINGS HAVE BEEN PREPARED BASED ON INFORMATION PROVIDED BY OTHERS. ANDERSON ENGINEERING, INC. HAS NOT VERIFIED THE ACCURACY AND/OR COMPLETENESS OF THIS INFORMATION. UNLESS OTHERWISE NOTED ON THESE DOCUMENTS, ANDERSON ENGINEERING, INC., SHALL NOT BE RESPONSIBLE FOR ANY ERRORS OR OMISSIONS THAT MAY BE INCORPORATED AS A RESULT OF ERRONEOUS INFORMATION PROVIDED BY OTHERS.
ANDERSON ENGINEERING, INC.
BY:
DATE: 11-14-15

STATE OF TEXAS
NORMAN EDWARD GOTH
82973
LICENSED PROFESSIONAL ENGINEER
10/27/14
Smith-Goth Engineers, Inc.
F-1611
SHEETS BEARING THIS SEAL ARE AUTHENTICATED. RESPONSIBILITY FOR ALL OTHER PLANS, SPECIFICATIONS OR INSTRUMENTS ARE DISCLAIMED.

O'Reilly AUTO PARTS
CORPORATE OFFICES
233 SOUTH PATTERSON
SPRINGFIELD, MISSOURI 65802
(417) 862-2674 TELEPHONE

PROJECT:
NEW O'REILLY AUTO PARTS STORE
S.I. 289 (PRESTON ROAD) & E. ASH STREET
CELINA, TEXAS

SITE UTILITY PLAN

SGE
SMITH-GOTH ENGINEERS, INC.
3855 S. JEFFERSON AVE.
SPRINGFIELD, MO 65807
P: 417-882-2200
F: 417-882-1188
WWW.SMITHGOTH.COM

DRAWN BY:	CHECKED BY:
CEV	NEG

DATE: 10/27/14
REVISION:
PROJECT NUMBER: CEA
SHEET NUMBER: 11 of 14
P-201406-01

© COPYRIGHT 2014 – DESIGNS, DRAWINGS AND SPECIFICATIONS ARE INSTRUMENTS OF SERVICE AND ARE THE PROPERTY OF THE DESIGN PROFESSIONAL. REPRODUCTION PROHIBITED WITHOUT THE EXPRESSED WRITTEN CONSENT OF THE DESIGN PROFESSIONAL.

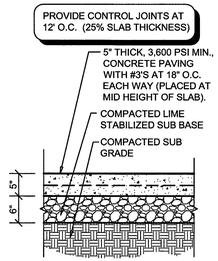

1 CONCRETE (STANDARD DUTY) PAVING SECTION

12 SCALE: 3/4" = 1'-0"

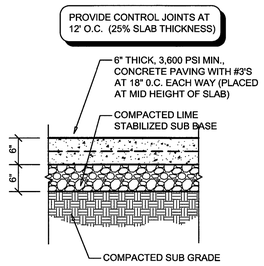

2 CONCRETE (HEAVY DUTY) PAVING SECTION

12 SCALE: 3/4" = 1'-0"

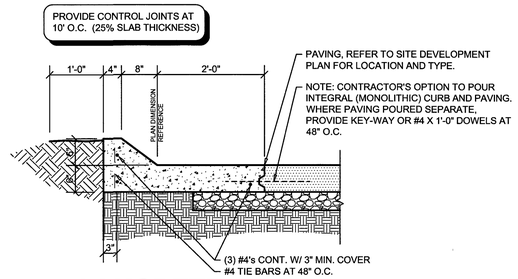

3 CONCRETE CURB SECTION

12 SCALE: 3/4" = 1'-0"

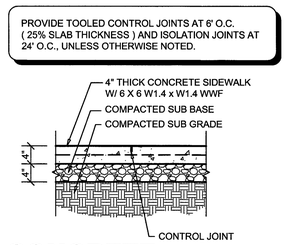

4 CONCRETE SIDEWALK SECTION

12 SCALE: 3/4" = 1'-0"

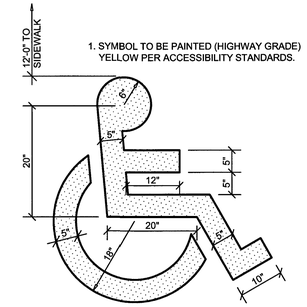

5 HANDICAP PARKING SYMBOL

12 SCALE: 3/4" = 1'-0"

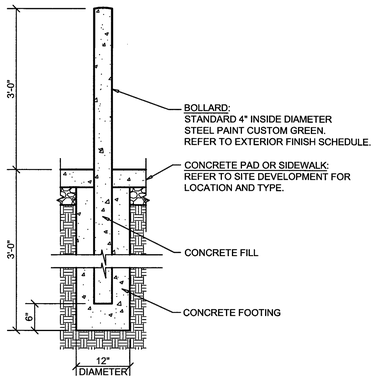

6 STEEL BOLLARD SECTION

12 SCALE: 3/4" = 1'-0"

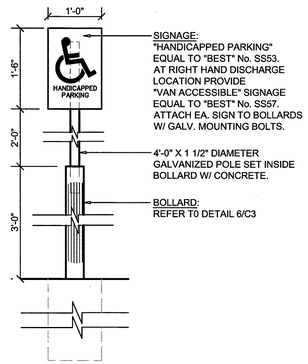

7 HANDICAP PARKING SIGN

12 SCALE: 3/4" = 1'-0"

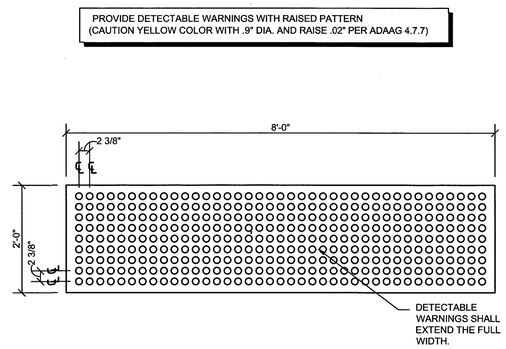

8 DETECTIBLE WARNING SURFACE

12 SCALE: N.T.S.

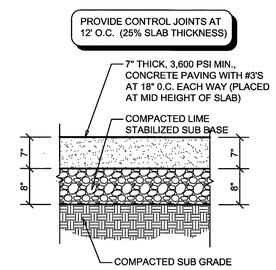

9 CONCRETE PAVING

12 SCALE: 3/4" = 1'-0"

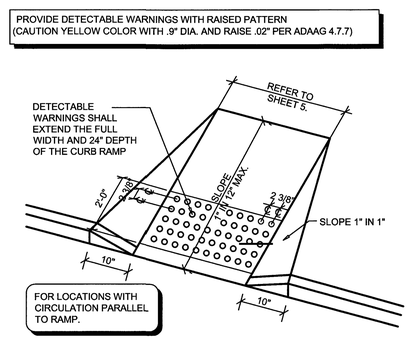

10 HANDICAP RAMP

12 SCALE: N.T.S.

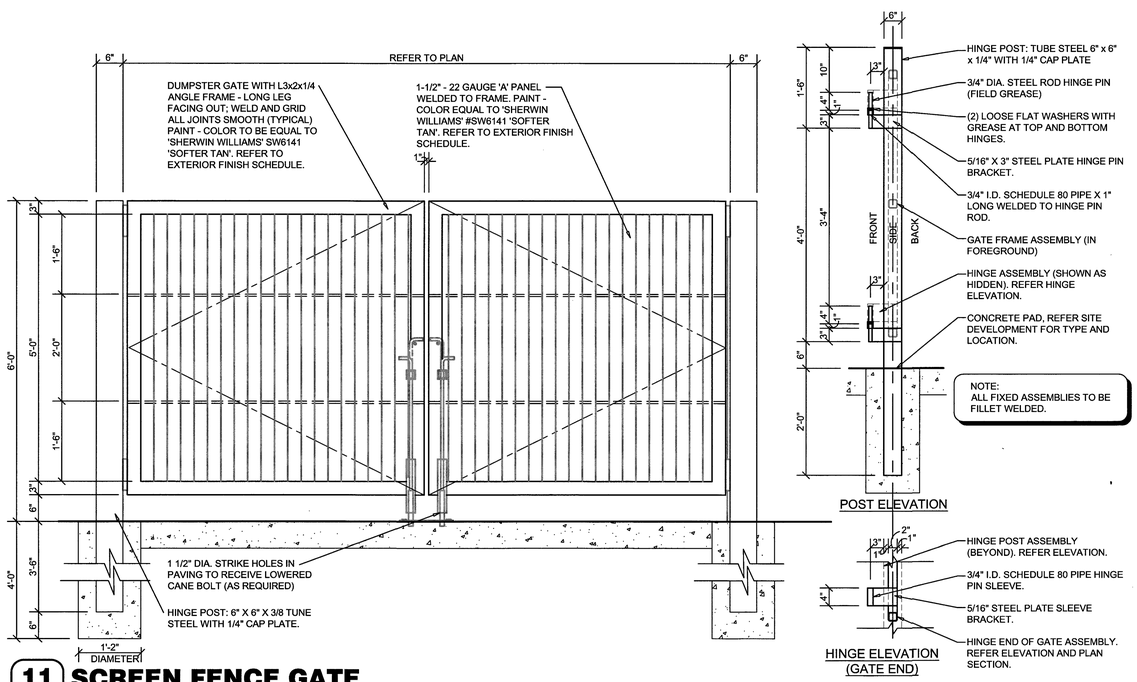

11 SCREEN FENCE GATE

12 SCALE: 3/4" = 1'-0"

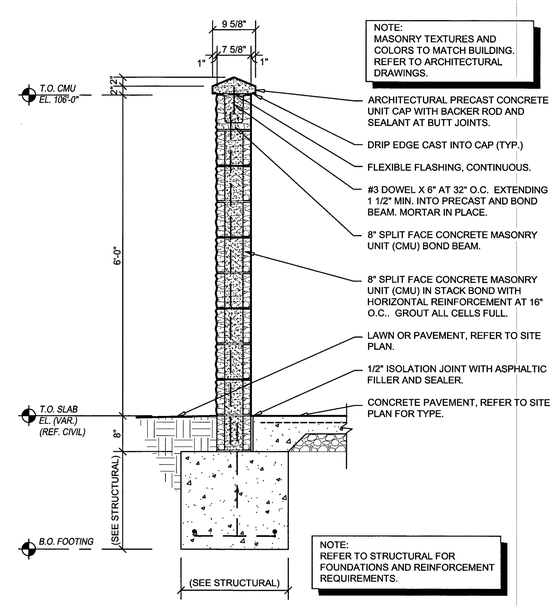

12 SCREEN FENCE

12 SCALE: 3/4" = 1'-0"

RECORD DRAWINGS

THESE RECORD DRAWINGS HAVE BEEN PREPARED BASED ON INFORMATION PROVIDED BY OTHERS. ANDERSON ENGINEERING, INC. HAS NOT VERIFIED THE ACCURACY AND/OR COMPLETENESS OF THIS INFORMATION, UNLESS OTHERWISE NOTED ON THESE DOCUMENTS. ANDERSON ENGINEERING, INC. SHALL NOT BE RESPONSIBLE FOR ANY ERRORS OR OMISSIONS THAT MAY BE INCORPORATED AS A RESULT OF ERRONEOUS INFORMATION PROVIDED BY OTHERS.

ANDERSON ENGINEERING, INC.

BY:

DATE: 11-14-15

STATE OF TEXAS
NEIL S. BRADY
88145
LICENSED PROFESSIONAL ENGINEER
10-27-14

SHEETS BEARING THIS SEAL ARE AUTHENTICATED, RESPONSIBILITY FOR ALL OTHER PLANS, SPECIFICATIONS OR INSTRUMENTS ARE DISCLAIMED.

O'Reilly AUTO PARTS
CORPORATE OFFICES
233 SOUTH PATTERSON
SPRINGFIELD, MISSOURI 65802
(417) 862-2674 TELEPHONE

PROJECT:
NEW O'REILLY AUTO PARTS STORE
S.H. 289 (PRESTON ROAD) & E. ASH STREET
CELINA, TEXAS

SITE DETAILS

MO ANDERSON ENGINEERING, INC
ENGINEERS • SURVEYORS • LABORATORIES • DRILLING
2045 W. WOODLAND, SPRINGFIELD, MISSOURI 65807 • PHONE (417) 866-2741
ANDERSON COA# F-3704 • NEIL S BRADY, PE# 88145

PROJ #	DRAWING #	BY: ATH
10122-14	WB-110-061	CKD: NSB

DRAWN BY:	CHECKED BY:
AH	NB

DATE: 10/27/14

REVISION:

PROJECT NUMBER: CEA

SHEET NUMBER

12 of 14

© COPYRIGHT 2014 – DESIGNS, DRAWINGS AND SPECIFICATIONS ARE INSTRUMENTS OF SERVICE AND ARE THE PROPERTY OF THE DESIGN PROFESSIONAL. REPRODUCTION PROHIBITED WITHOUT THE EXPRESSED WRITTEN CONSENT OF THE DESIGN PROFESSIONAL.

RECORD DRAWINGS

THESE RECORD DRAWINGS HAVE BEEN PREPARED BASED ON INFORMATION PROVIDED BY OTHERS. ANDERSON ENGINEERING, INC. HAS NOT VERIFIED THE ACCURACY AND/OR COMPLETENESS OF THIS INFORMATION. UNLESS OTHERWISE NOTED ON THESE DOCUMENTS. ANDERSON ENGINEERING, INC. SHALL NOT BE RESPONSIBLE FOR ANY ERRORS OR OMISSIONS THAT MAY BE INCORPORATED AS A RESULT OF ERRONEOUS INFORMATION PROVIDED BY OTHERS.

ANDERSON ENGINEERING, INC.

BY:

DATE: 11-12-14

STATE OF TEXAS — NEIL S. BRADY — 88145 — LICENSED PROFESSIONAL ENGINEER — 10-27-14

SHEETS BEARING THIS SEAL ARE AUTHENTICATED, RESPONSIBILITY FOR ALL OTHER PLANS, SPECIFICATIONS OR INSTRUMENTS ARE DISCLAIMED.

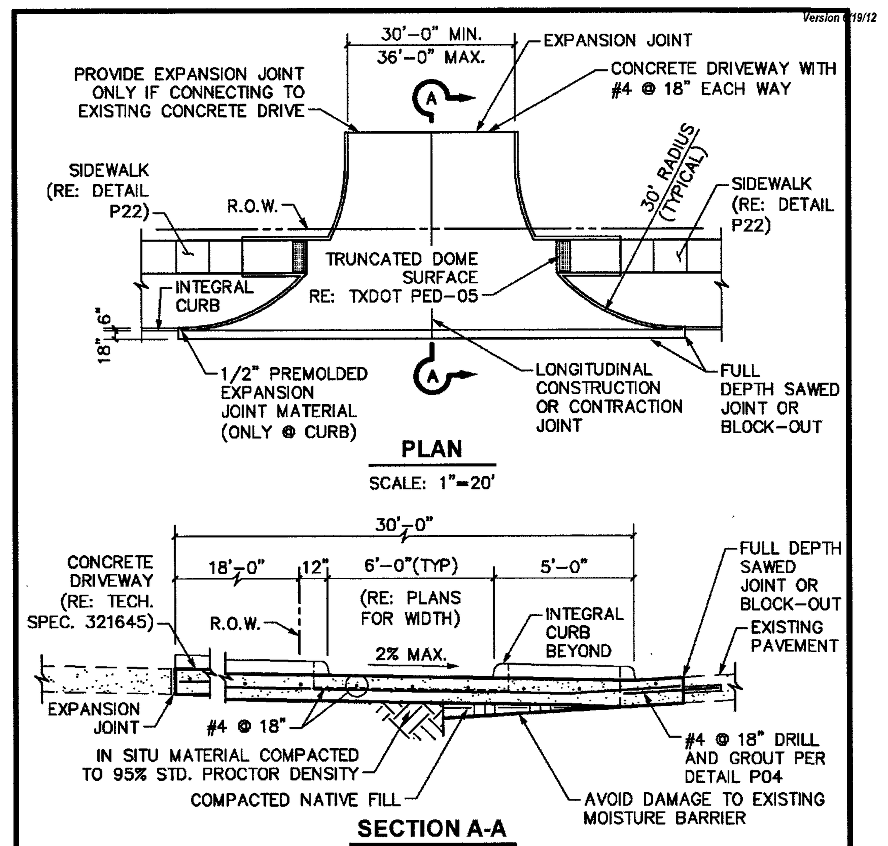

NOTES:

1. REFER TO TECHNICAL SPECIFICATION 321313 FOR CONCRETE PAVEMENT
2. EXISTING CURB AND GUTTER SHALL BE VERTICALLY SAWCUT. HORIZONTAL SAWCUTTING OF CURB NOT ALLOWED.
3. SIDEWALK SECTION THROUGH DRIVEWAY SHALL BE POURED SAME THICKNESS AS DRIVEWAY APPROACH (EXISTING SIDEWALK, IF ANY, SHALL BE REMOVED).
4. DRIVEWAY THICKNESS TO MATCH STREET PAVEMENT THICKNESS (6" MINIMUM).

FRISCO — STANDARD CONSTRUCTION DETAIL — **COMMERCIAL DRIVEWAY APPROACH** — SCALE: AS MARKED — REVISED: MAR 2012 — P12

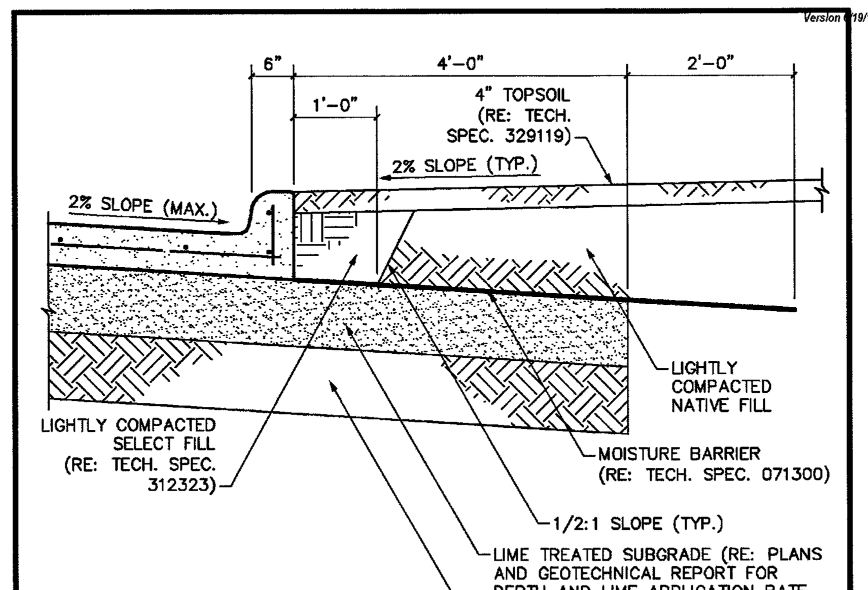

	ROW WIDTH	PAVEMENT WIDTH (FACE TO FACE)
TYPE A	120'	DIVIDED-35' EACH WAY
TYPE B	90'	DIVIDED-24' EACH WAY
TYPE C	60'	36'
TYPE D	60'	36'
TYPE E	50'	26'
TYPE F	60'	30'
TYPE G	60'	26'

NOTES:

1. REFER TO TECHNICAL SPECIFICATION 321313 FOR CONCRETE PAVEMENT.
2. REFER TO DETAIL P03 FOR CONCRETE PAVEMENT REINFORCEMENT.
3. CARE SHALL BE TAKEN NOT TO RIP OR TEAR THE MOISTURE BARRIER DURING PLACEMENT OF THE COVER FILL.

FRISCO — STANDARD CONSTRUCTION DETAIL — **THOROUGHFARE CLASSES "A" THROUGH "G" TYPICAL SECTION (WITH MOISTURE CONDITIONING)** — SCALE: 3/4"=1'-0" — REVISED: MAR 2012 — P01

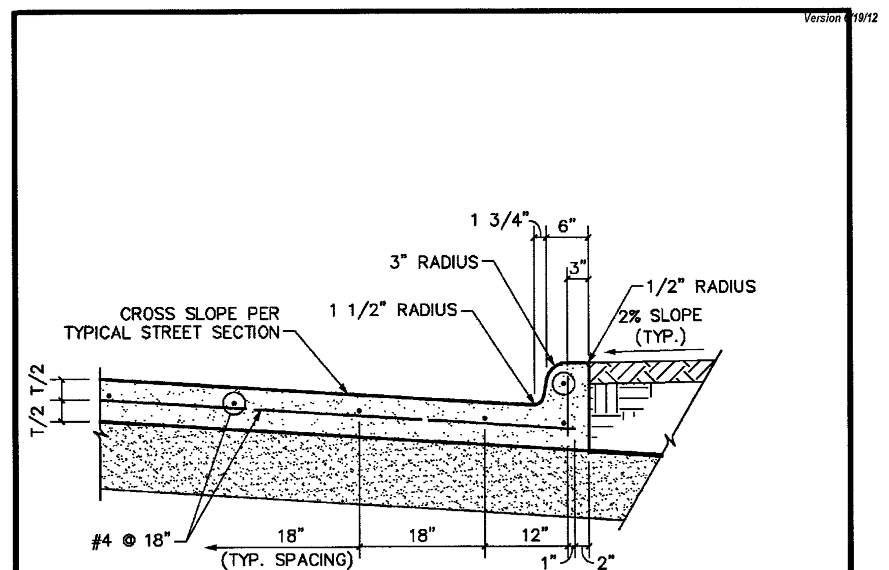

NOTES:

1. REFER TO TECHNICAL SPECIFICATION 321313 FOR CONCRETE PAVEMENT.
2. ALL REINFORCING STEEL SHALL BE #4 DEFORMED STEEL BARS CONFORMING TO ASTM A615 (GRADE 60) IN ACCORDANCE WITH TECHNICAL SPECIFICATION 032100.
3. INITIAL TRANSVERSE REINFORCING STEEL SPACING SHALL BE 12".
4. INITIAL LONGITUDINAL REINFORCING STEEL SPACING SHALL BE 12" AS SHOWN ABOVE.

FRISCO — STANDARD CONSTRUCTION DETAIL — **TYPICAL PAVEMENT REINFORCEMENT AND CONCRETE CURB** — SCALE: 3/4"=1'-0" — REVISED: MAR 2012 — P03

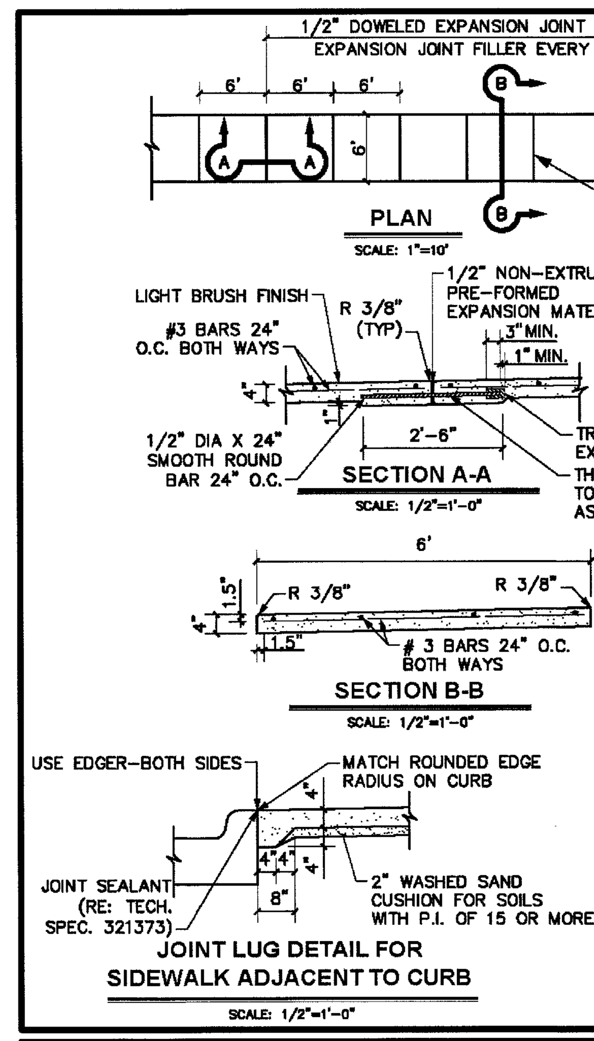

NOTES:

1. MAXIMUM GRADE OF THE SIDEWALK SHALL BE FIVE PERCENT (5%) OR THE GRADE OF THE ADJACENT STREET.
2. CROSS SLOPE OF SIDEWALK SHALL BE TWO PERCENT (2%) MAX PER A.D.A.
3. OTHER THAN 6' SIDEWALK WIDTH MAY BE SPECIFIED BY OWNER. 6' SIDEWALK WIDTH FOR A & B THOROUGHFARES.
4. SIDEWALK SHALL BE CLASS A CONCRETE UNLESS OTHERWISE SPECIFIED BY OWNER.
5. ALL HONEYCOMB IN BACK OF CURB TO BE TROWEL-PLASTERED BEFORE POURING SIDEWALK.
6. LUG MAY BE FORMED BY SHAPING SUBGRADE TO APPROXIMATE DIMENSIONS SHOWN.

FRISCO — STANDARD CONSTRUCTION DETAIL — **REINFORCED CONCRETE SIDEWALK** — SCALE: AS MARKED — REVISED: MAR 2012 — P22

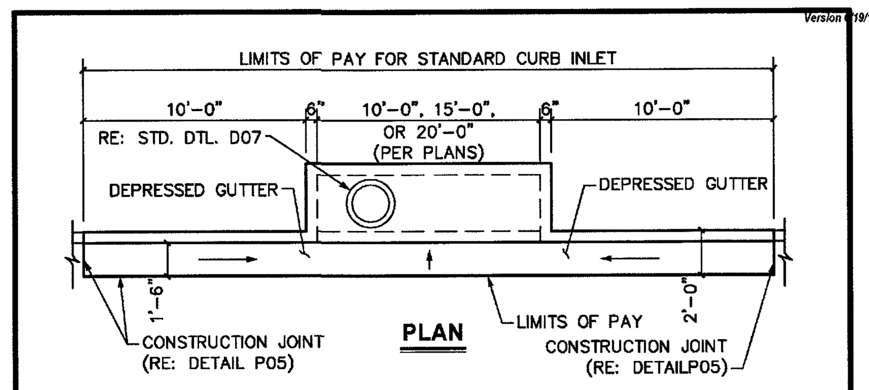

NOTES:

1. TOP OF INLET TO SLOPE 2% TOWARDS STREET OR PER PLAN.
2. CENTER SUPPORT BEAM REQUIRED FOR 15' AND 20' STANDARD CURB INLETS.
3. ADDITIONAL REINFORCING STEEL TO BE PLACED AROUND MANHOLE OPENING.

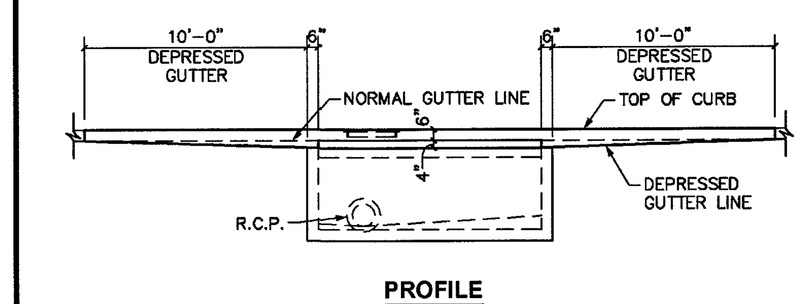

NOTE:

1. MANHOLE TO BE PLACED AT LOW END OF INLET. TWO MANHOLES ARE REQUIRED ON 15' AND 20' INLETS ONLY IF THE INSIDE HEIGHT OF THE INLET IS LESS THAN 4 FEET.

FRISCO — STANDARD CONSTRUCTION DETAIL — **STANDARD CURB INLET SHEET 1 OF 2** — SCALE: 1"=5' — REVISED: MAR 2012 — D02

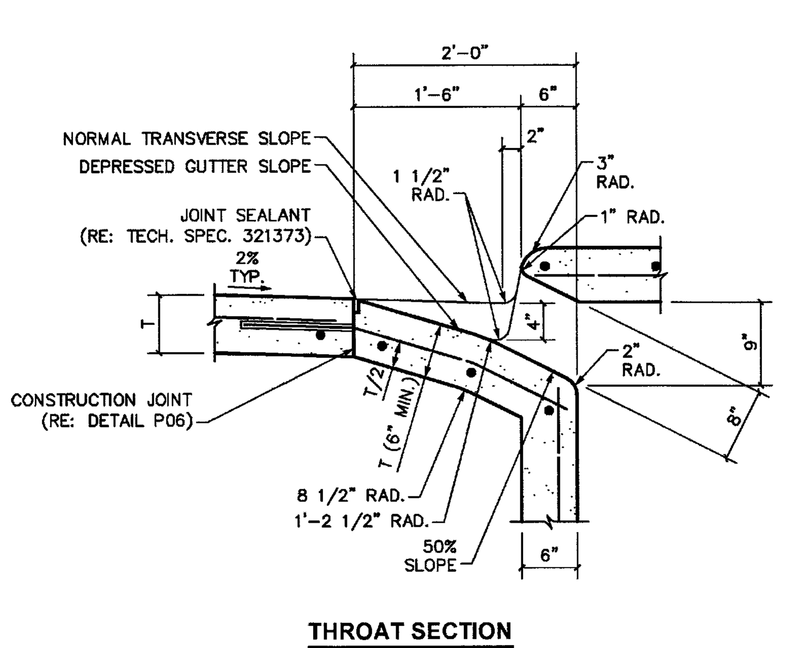

FRISCO — STANDARD CONSTRUCTION DETAIL — **STANDARD CURB INLET SHEET 2 OF 2** — SCALE: 1"=1'-0" — REVISED: MAR 2012 — D03

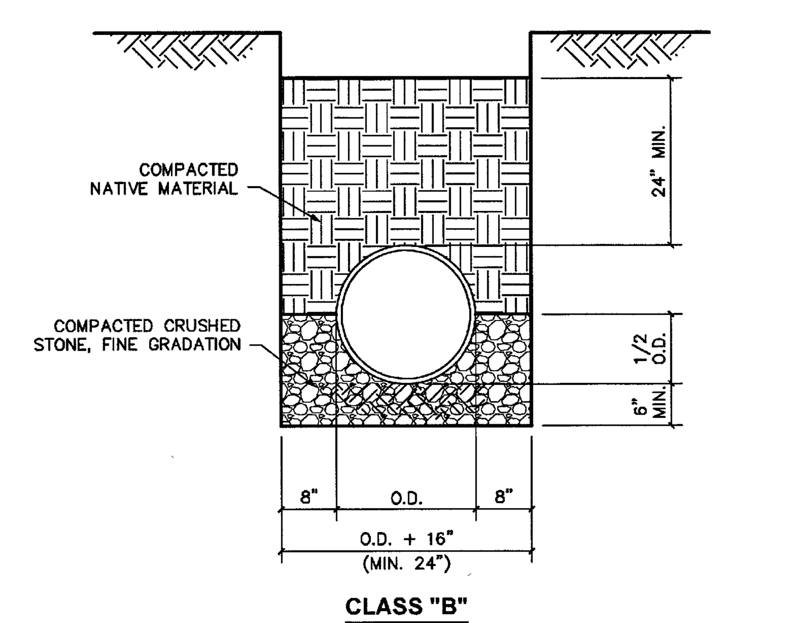

NOTES:

1. UTILIZE CLASS "B" EMBEDMENT FOR RCP STORM DRAIN INSTALLATIONS.
2. REFER TO TECHNICAL SPECIFICATION 330510 TRENCHING, BACKFILLING AND COMPACTION.
3. BEDDING DEPTH MEASURED FROM OUTSIDE THE PIPE BELL.
4. FINAL BACKFILL MOISTURE TREATED TO 3% ABOVE OPTIMUM AT 95% STANDARD PROCTOR FOR EAGLE FORD AND 0 ±4% FOR AUSTIN CHALK.

FRISCO — STANDARD CONSTRUCTION DETAIL — **EMBEDMENT "B" (STORM)** — SCALE: 3/4"=1'-0" — REVISED: MAR 2012 — U02

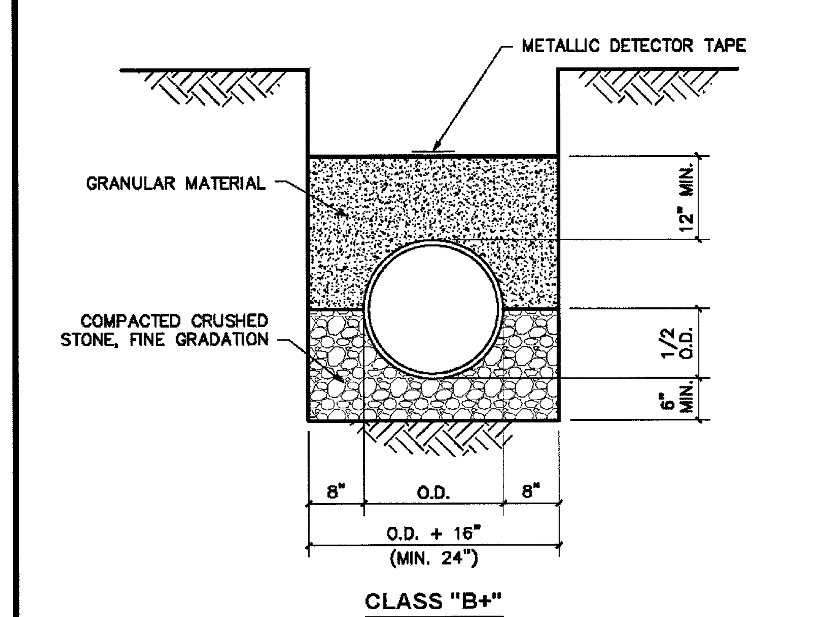

NOTES:

1. UTILIZE CLASS "B+" EMBEDMENT FOR PVC WATER LINE INSTALLATIONS.
2. REFER TO TECHNICAL SPECIFICATION 330510 TRENCHING, BACKFILLING AND COMPACTION.
3. BEDDING DEPTH MEASURED FROM OUTSIDE THE PIPE BELL.
4. FINAL BACKFILL MOISTURE TREATED TO 3% ABOVE OPTIMUM AT 95% STANDARD PROCTOR FOR EAGLE FORD AND 0 ±4% FOR AUSTIN CHALK.

FRISCO — STANDARD CONSTRUCTION DETAIL — **EMBEDMENT "B+" (WATER)** — SCALE: 3/4"=1'-0" — REVISED: APRIL 2012 — U03

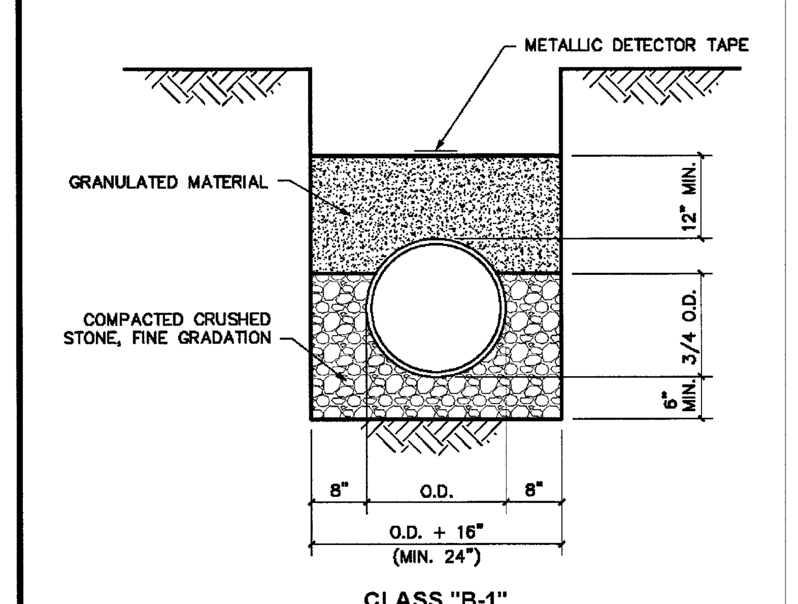

NOTES:

1. UTILIZE CLASS "B-1" EMBEDMENT FOR PVC (SDR 35) WASTEWATER LINE INSTALLATIONS.
2. REFER TO TECHNICAL SPECIFICATION 330510 TRENCHING, BACKFILLING AND COMPACTION.
3. BEDDING DEPTH MEASURED FROM OUTSIDE THE PIPE BELL.
4. FINAL BACKFILL MOISTURE TREATED TO 3% ABOVE OPTIMUM AT 95% STANDARD PROCTOR FOR EAGLE FORD AND 0 ±4% FOR AUSTIN CHALK.

FRISCO — STANDARD CONSTRUCTION DETAIL — **EMBEDMENT "B-1" (WASTEWATER)** — SCALE: 3/4"=1'-0" — REVISED: APRIL 2012 — U04

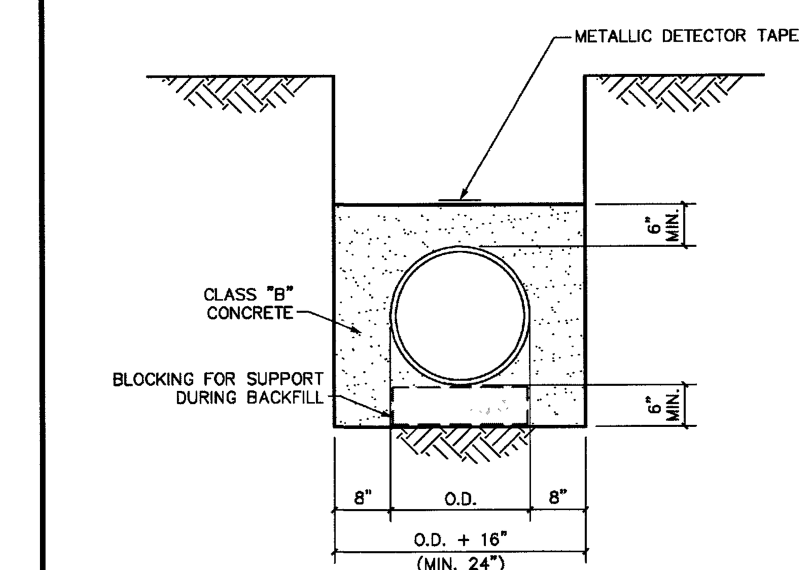

NOTES:

1. REFER TO TECHNICAL SPECIFICATION 330510 TRENCHING, BACKFILLING AND COMPACTION.
2. BEDDING DEPTH MEASURED FROM OUTSIDE OF PIPE BELL.
3. FINAL BACKFILL MOISTURE TREATED TO 3% ABOVE OPTIMUM AT 95% STANDARD PROCTOR FOR EAGLE FORD AND 0 ±4% AUSTIN CHALK.

FRISCO — STANDARD CONSTRUCTION DETAIL — **EMBEDMENT "G"** — SCALE: 3/4"=1'-0" — REVISED: MAR 2012 — U06

O'Reilly AUTO PARTS

CORPORATE OFFICES
233 SOUTH PATTERSON
SPRINGFIELD, MISSOURI 65802
(417) 862-2674 TELEPHONE

PROJECT:
NEW O'REILLY AUTO PARTS STORE
S.H. 289 (PRESTON ROAD) & E ASH STREET
CELINA, TEXAS

CITY DETAILS

MO ANDERSON ENGINEERING, INC

ENGINEERS • SURVEYORS • LABORATORIES • DRILLING
2045 W. WOODLAND • SPRINGFIELD, MISSOURI 65807 • PHONE (417) 866-2741
NEIL S. BRADY, PE# 88145

PROJ # 10178-14 — DRAWING # WB-110-061 — BY: ATH — CKD: NSB

DRAWN BY:	CHECKED BY:
AH	NB

DATE: 10/27/14

REVISION:

PROJECT NUMBER: CEA

SHEET NUMBER

13 of 14

P-201406-01

© COPYRIGHT 2014 – DESIGNS, DRAWINGS AND SPECIFICATIONS ARE INSTRUMENTS OF SERVICE AND ARE THE PROPERTY OF THE DESIGN PROFESSIONAL. REPRODUCTION PROHIBITED WITHOUT THE EXPRESSED WRITTEN CONSENT OF THE DESIGN PROFESSIONAL.

RECORD DRAWINGS
THESE RECORD DRAWINGS HAVE BEEN PREPARED BASED ON INFORMATION PROVIDED BY OTHERS. ANDERSON ENGINEERING, INC. HAS NOT VERIFIED THE ACCURACY AND/OR COMPLETENESS OF THIS INFORMATION. UNLESS OTHERWISE NOTED ON THESE DOCUMENTS ANDERSON ENGINEERING, INC. SHALL NOT BE RESPONSIBLE FOR ANY ERRORS OR OMISSIONS THAT MAY BE INCORPORATED AS A RESULT OF ERRONEOUS INFORMATION PROVIDED BY OTHERS.
ANDERSON ENGINEERING, INC.
BY:
DATE: 11-4-14

STATE OF TEXAS — NEIL S. BRADY — 88145 — LICENSED PROFESSIONAL ENGINEER — 10-27-14

SHEETS BEARING THIS SEAL ARE AUTHENTICATED, RESPONSIBILITY FOR ALL OTHER PLANS, SPECIFICATIONS OR INSTRUMENTS ARE DISCLAIMED.

GENERAL NOTES FOR ALL THRUST BLOCKS:

1. CONCRETE FOR BLOCKING SHALL BE CLASS B AND SULFATE RESISTANT. RE: TECHNICAL SPECIFICATION 321313.
2. ALL CALCULATIONS ARE BASED ON INTERNAL PRESSURE OF 200 PSI FOR DUCTILE IRON, P.V.C.
3. VOLUMES OF THRUST BLOCKS ARE NET VOLUMES OF CONCRETE TO BE FURNISHED. THE CORRESPONDING WEIGHT OF THE CONCRETE (CLASS B) IS EQUAL TO OR GREATER THAN THE VERTICAL COMPONENT OF THE THRUST ON THE VERTICAL BEND.
4. WALL THICKNESS (T) ASSUMED HERE FOR ESTIMATING PURPOSES ONLY.
5. POUR CONCRETE FOR BLOCK AGAINST UNDISTURBED EARTH.
6. DIMENSIONS MAY BE VARIED AS REQUIRED BY FIELD CONDITIONS WHERE AND AS DIRECTED BY THE ENGINEER. THE VOLUME OF CONCRETE BLOCKING SHALL BE LESS THAN SHOWN HERE.
7. THE SOIL BEARING PRESSURES ARE BASED ON 1000 LBS./S.F. IN SOIL AND 2000 LBS./S.F. IN ROCK.
8. USE POLYETHYLENE WRAP OR EQUAL BETWEEN CONCRETE AND BEND, TEE, OR PLUG TO PREVENT THE CONCRETE FROM STICKING TO IT.
9. FOR STANDARD FITTINGS, CONCRETE SHALL NOT EXTEND BEYOND JOINTS.

FRISCO — STANDARD CONSTRUCTION DETAIL — THRUST BLOCK GENERAL NOTES — SCALE: N.T.S. — REVISED: MAR 2012 — W06

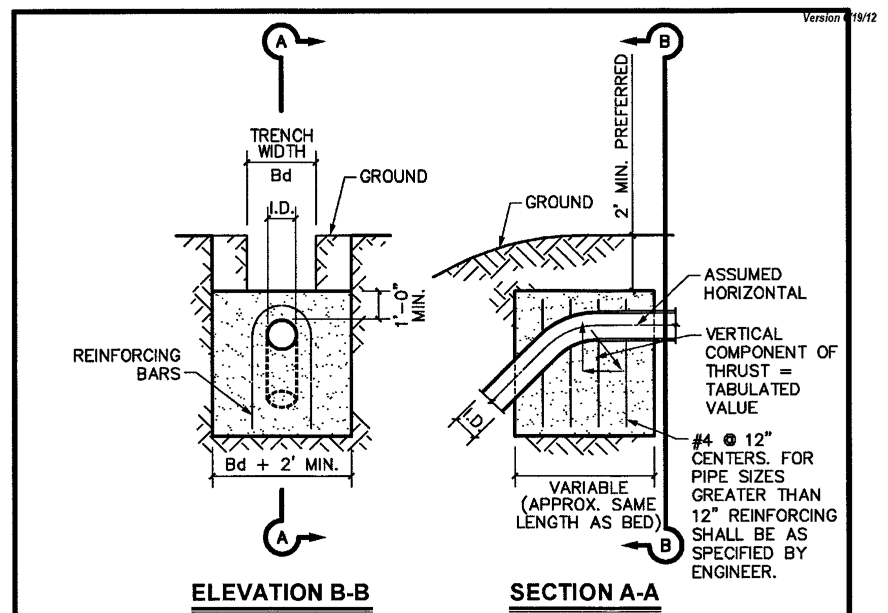

Δ	11.25°		22.50°		30°		45°		67.50°		90°		Δ
I.D. (IN.)	THRUST (TONS)	VOL. (C.Y.)	THRUST (TONS)	VOL. (C.Y.)	THRUST (TONS)	VOL. (C.Y.)	THRUST (TONS)	VOL. (C.Y.)	THRUST (TONS)	VOL. (C.Y.)	THRUST (TONS)	VOL. (C.Y.)	I.D. (IN.)
4,6,8	1.0	0.5	2.0	1.0	2.5	1.3	3.6	1.8	4.6	2.3	5.0	2.5	4,6,8
10,12	2.2	1.1	4.3	2.2	5.7	2.8	8.0	4.0	10.5	5.2	11.3	5.7	10,12
16,18	5.0	2.5	9.7	4.9	12.7	6.4	18.0	9.0	23.5	11.8	25.5	12.7	16,18
20	6.1	3.1	12.0	6.0	15.7	7.9	22.2	11.1	29.2	14.5	31.4	15.7	20
24	8.2	4.4	17.3	8.7	22.6	11.3	32.0	16.0	41.8	20.9	45.2	22.6	24
30	10.5	5.2	20.3	10.1	26.5	13.3	37.5	18.8	49.0	24.5	53.1	26.5	30
36	14.9	7.5	29.2	14.6	38.2	19.1	54.0	27.0	70.5	35.3	76.4	38.2	36
42	20.3	10.1	39.8	19.9	52.0	26.0	73.5	36.7	96.0	48.0	104.0	52.0	42
48	26.5	13.2	51.9	26.0	67.9	33.9	96.0	48.0	126.0	62.7	136.0	67.9	48
54	33.5	16.8	65.7	32.9	85.9	42.9	122.0	60.7	159.0	79.4	172.0	85.9	54
60	41.4	20.7	81.2	40.6	106.0	53.0	150.0	75.0	196.0	98.0	212.0	106.0	60
66	50.1	25.0	98.2	49.1	128.0	64.2	182.0	90.7	237.0	119.0	257.0	128.0	66
72	59.6	29.8	117.0	58.4	153.0	76.3	216.0	108.0	282.0	141.0	305.0	153.0	72
78	69.9	35.0	137.0	68.6	179.0	90.0	254.0	127.0	331.0	166.0	358.0	179.0	78
84	81.1	40.5	159.0	79.5	208.0	104.0	294.0	147.0	384.0	192.0	416.0	208.0	84
90	93.1	46.5	183.0	91.3	239.0	119.0	337.0	169.0	441.0	221.0	477.0	239.0	90
96	106.0	53.0	208.0	104.0	272.0	136.0	384.0	192.0	502.0	251.0	543.0	272.0	96

NOTE:
1. REFER TO STANDARD DETAIL W06 FOR GENERAL NOTES.

FRISCO — STANDARD CONSTRUCTION DETAIL — VERTICAL THRUST BLOCK AT PIPE BEND — SCALE: 1/4"=1'-0" — REVISED: MAR 2012 — W05

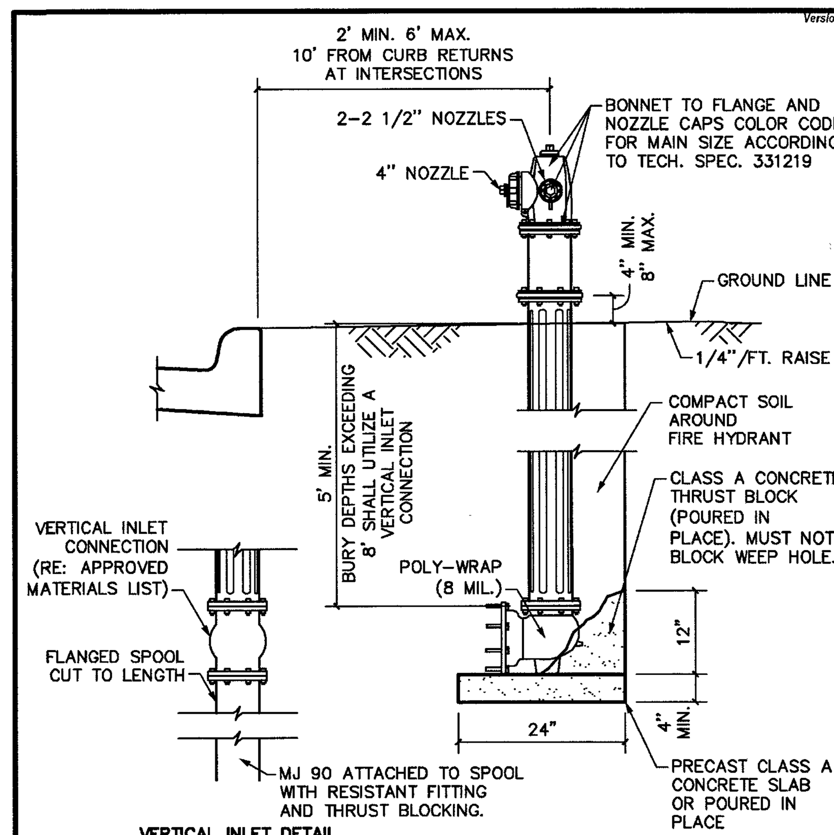

NOTES:
1. A BLUE STEMSONITE (OR APPROVED OTHER) MODEL 88-SSA FIRE HYDRANT MARKER WILL BE INSTALLED OPPOSITE FIRE HYDRANTS JUST OFF CENTER TO THE SIDE OF THE STREET ADJACENT TO THE HYDRANT.
2. CONTRACTOR SHALL UTILIZE VERTICAL INLET CONNECTION WHEN BURY DEPTHS EXCEED EIGHT (8) FEET.

FRISCO — STANDARD CONSTRUCTION DETAIL — FIRE HYDRANT — SCALE: 3/4"=1'-0" — REVISED: MAR 2012 — W12

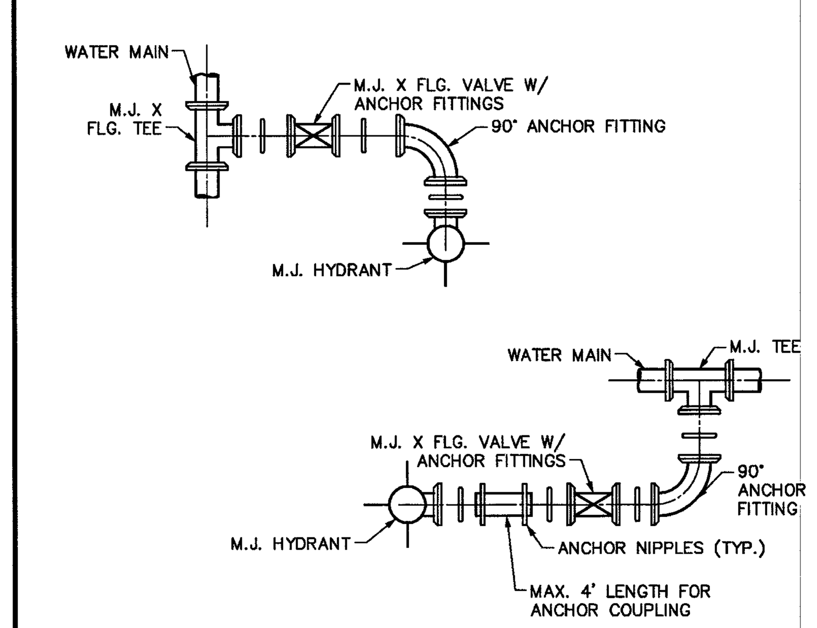

NOTES:
1. ALL FIRE HYDRANTS MUST BE ANCHORED TO MAIN BY USE OF ANCHOR FITTINGS.
2. ANCHOR TEES ALLOWED.
3. REFER TO TECHNICAL SPECIFICATION 331219 FIRE HYDRANTS.

FRISCO — STANDARD CONSTRUCTION DETAILS — FIRE HYDRANT INSTALLATION — SCALE: 1/8"=1'-0" — REVISED: MAR 2012 — W13

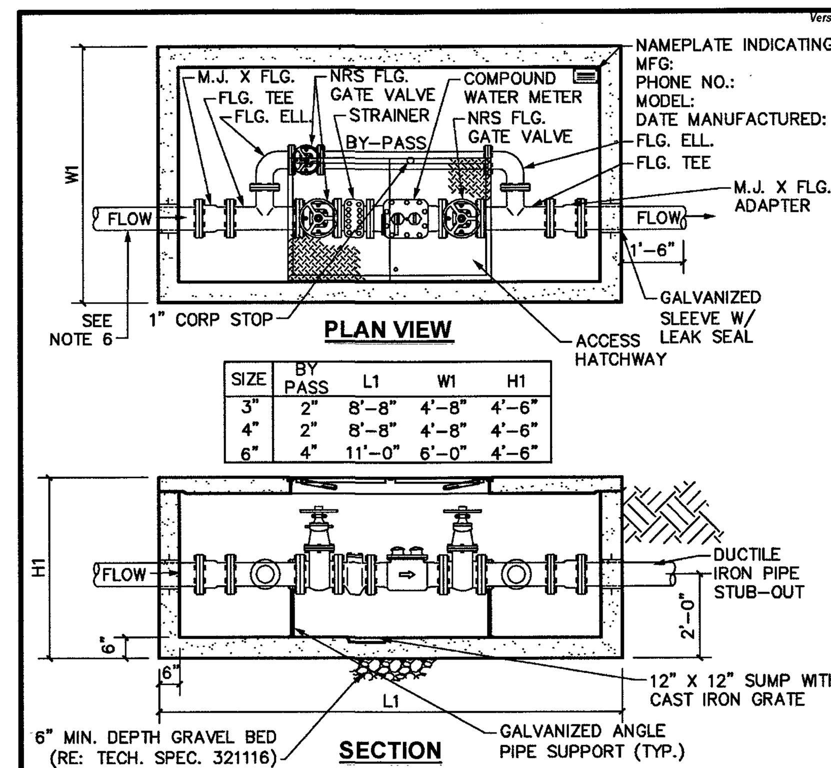

SIZE	BY PASS	L1	W1	H1
3"	2"	8'-8"	4'-8"	4'-6"
4"	2"	8'-8"	4'-8"	4'-6"
6"	4"	11'-0"	6'-0"	4'-6"

NOTES:
1. UNIT IS OF MONOLITHIC CONSTRUCTION AT FLOOR AND FIRST STAGE OF WALL WITH SECTIONAL RISER TO REQUIRED DEPTH.
2. REINFORCEMENT: GRADE 60 REINFORCED. STEEL BAR CONFORMING TO ASTM A615 ON REQUIRED CENTERS OR EQUAL.
3. HATCHWAY: 3' X 5' GALVANIZED STEEL DOUBLE LEAF SPRING ASSISTED HATCHWAY – W/ SLAM LOCK (TRAFFIC RATED IF WITHIN PAVING).
4. PRECAST VAULT SHALL BE FROM APPROVED MATERIAL LIST.
5. PIPE FITTINGS SHALL BE DUCTILE IRON.
6. MINIMUM 6" WATER LINE OFF THE WATER MAIN WITH MINIMUM 6" GATE VALVE PRIOR TO REDUCING IN SIZE.

FRISCO — STANDARD CONSTRUCTION DETAIL — DOMESTIC WATER METER VAULT — SCALE: 3/8"=1'-0" — REVISED: MAR 2012 — W17

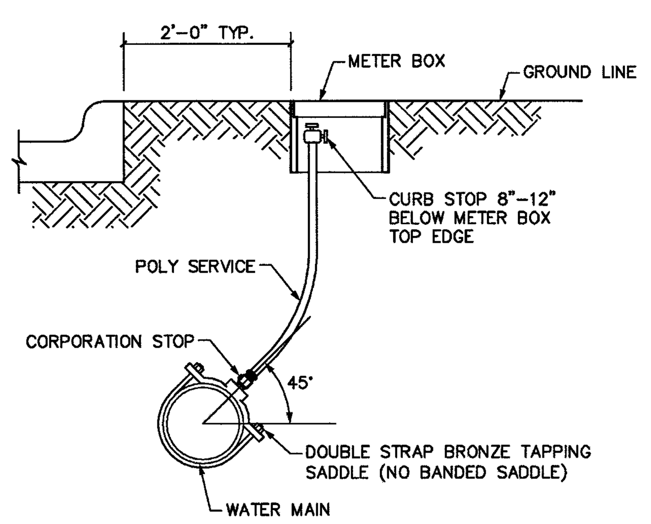

NOTES:
1. WATER SERVICES SHALL NOT BE CONNECTED TO FIRE HYDRANT LINES OR TO FIRE SERVICE MAINS.
2. METER BOX SHALL BE LOCATED OUT OF ALL FLATWORK, SIDEWALKS AND APPROACHES.
3. REFER TO TECHNICAL SPECIFICATION 331213 WATER SERVICE CONNECTIONS.

FRISCO — STANDARD CONSTRUCTION DETAIL — TYPICAL SERVICE CONNECTION — SCALE: 3/4"=1'-0" — REVISED: MAR 2012 — W16

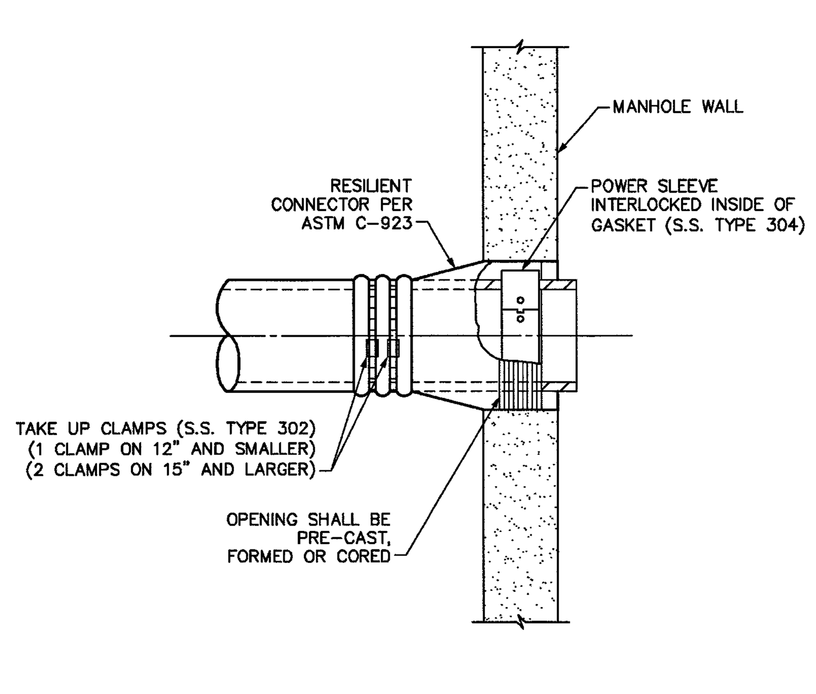

NOTE:
1. REFER TO APPROVED MATERIALS LIST.

FRISCO — STANDARD CONSTRUCTION DETAIL — MANHOLE TO PIPE RESILIENT CONNECTOR — SCALE: 1"=1'-0" — REVISED: MAR 2012 — S03

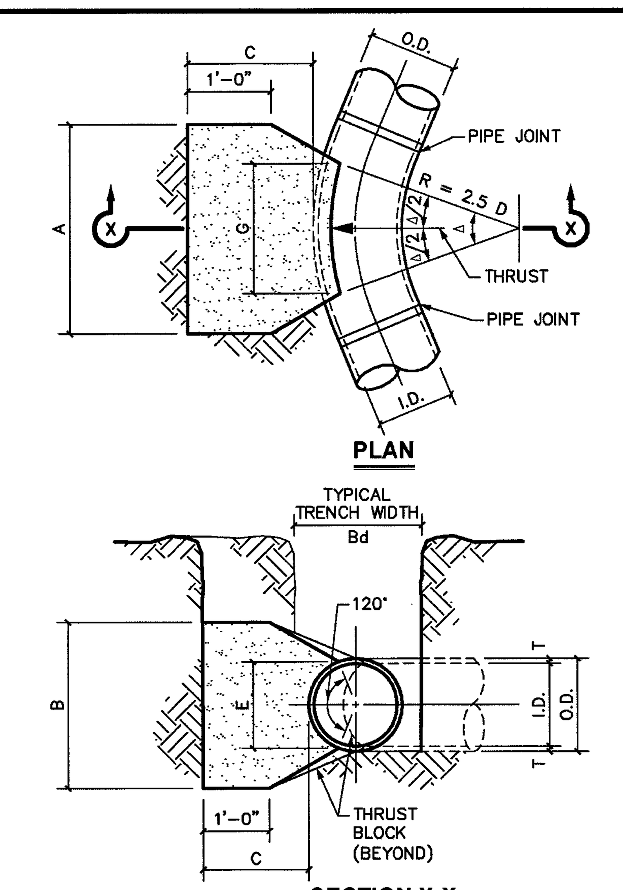

NOTES:
1. REFER TO STANDARD DETAIL W02 AND W03 FOR TABLES OF DIMENSIONS AND QUANTITIES.
2. REFER TO STANDARD DETAIL W05 FOR GENERAL NOTES.

FRISCO — STANDARD CONSTRUCTION DETAIL — HORIZONTAL THRUST BLOCK AT PIPE BEND SHEET 1 OF 3 — SCALE: 3/4"=1'-0" — REVISED: MAR 2012 — W01

I.D. (IN.)	T (IN.)	Δ = 11.25° C (IN.)	Δ ≥ 22.50° C (IN.)	E (IN.)
4,6,8	0.4	1.5	1.5	0.9
10,12	0.5	1.5	1.5	1.2
16,18	0.6	1.5	1.5	1.6
20	0.7	1.5	1.5	1.8
24	0.9	1.5	1.5	2.1
30	2.9	1.5	1.9	2.6
36	4.5	1.5	2.3	3.3
42	5.0	1.8	2.6	3.8
48	5.5	2.0	3.0	4.3
54	6.0	2.3	3.4	4.8
60	6.5	2.5	3.8	5.3
66	6.8	2.8	4.1	5.7
72	7.5	3.0	4.5	6.3
78	7.5	3.3	4.9	6.7
84	8.0	3.5	5.3	7.2
90	8.5	3.8	5.6	7.7
96	9.0	4.0	6.0	8.2

I.D. (IN.)	Δ = 11.25° G (FT.)	THRUST (TONS)	EARTH A (FT.)	EARTH B (FT.)	EARTH VOL. (C.Y.)	ROCK A (FT.)	ROCK B (FT.)	ROCK VOL. (C.Y.)
4,6,8	0.4	1.0	1.0	1.5	0.1	1.0	1.0	0.1
10,12	0.6	2.2	1.5	1.5	0.1	1.0	1.5	0.1
16,18	0.8	5.0	2.0	2.5	0.3	1.5	2.0	0.2
20	0.9	6.2	2.0	3.5	0.4	1.5	3.0	0.3
24	1.1	8.9	3.0	3.5	0.5	1.5	3.0	0.3
30	1.4	10.4	3.0	3.5	0.6	2.0	3.5	0.4
36	1.7	15.0	3.5	4.5	0.9	2.0	4.0	0.5
42	1.9	20.4	4.5	5.0	1.5	2.5	5.0	0.8
48	2.2	26.6	4.5	6.0	2.0	2.5	6.0	1.1
54	2.5	33.7	6.0	6.0	3.0	3.0	6.0	1.4
60	2.7	41.6	6.0	7.0	3.8	3.0	7.0	1.8
66	3.0	50.3	6.5	8.0	5.1	3.5	8.0	2.7
72	3.3	59.9	7.5	8.0	6.3	4.0	8.0	3.3
78	3.6	70.2	8.0	9.0	8.1	4.0	9.0	3.9
84	3.8	81.5	8.5	10.0	10.3	4.5	10.0	5.3
90	4.1	93.5	9.5	10.0	12.2	5.0	10.0	6.3
96	4.4	106.4	10.0	11.0	15.0	5.0	11.0	7.4

I.D. (IN.)	Δ = 22.50° G (FT.)	THRUST (TONS)	EARTH A (FT.)	EARTH B (FT.)	EARTH VOL. (C.Y.)	ROCK A (FT.)	ROCK B (FT.)	ROCK VOL. (C.Y.)
4,6,8	0.8	2.0	1.5	1.5	0.1	1.0	1.0	0.1
10,12	1.1	4.4	2.0	2.5	0.3	1.5	1.5	0.1
16,18	1.6	9.9	3.0	3.5	0.6	2.0	2.5	0.3
20	1.8	12.3	3.5	3.5	0.7	2.0	3.0	0.4
24	2.2	17.7	4.0	4.5	1.0	3.0	3.5	0.5
30	2.7	20.7	5.0	4.5	1.5	3.0	4.0	0.8
36	3.3	29.8	5.5	5.5	2.3	4.0	4.0	1.3
42	3.8	40.5	7.0	6.0	3.9	4.5	5.0	2.1
48	4.4	52.9	8.0	7.0	5.7	4.5	6.0	2.8
54	4.9	67.0	9.0	8.0	8.0	6.0	6.0	4.1
60	5.5	82.7	9.5	9.0	10.6	6.0	7.0	5.3
66	6.0	100.1	10.5	10.0	14.1	6.5	8.0	7.2
72	6.6	119.1	11.0	11.0	17.6	7.5	8.0	9.1
78	7.1	139.8	12.0	12.0	22.5	8.0	9.0	11.7
84	7.6	162.1	13.0	12.5	27.2	8.5	10.0	14.8
90	8.2	186.1	14.0	13.5	33.7	9.5	10.0	17.7
96	8.7	211.7	15.0	14.5	41.2	10.0	11.0	21.8

FRISCO — STANDARD CONSTRUCTION DETAIL — HORIZONTAL THRUST BLOCK AT PIPE BEND SHEET 2 OF 3 — SCALE: N.T.S. — REVISED: MAR 2012 — W02

I.D. (IN.)	Δ = 30° G (FT.)	THRUST (TONS)	EARTH A (FT.)	EARTH B (FT.)	EARTH VOL. (C.Y.)	ROCK A (FT.)	ROCK B (FT.)	ROCK VOL. (C.Y.)
4,6,8	1.0	2.6	2.0	1.5	0.2	1.0	1.5	0.1
10,12	1.5	5.9	2.5	2.5	0.3	2.0	1.5	0.2
16,18	2.2	13.2	3.5	4.0	0.8	2.5	3.0	0.4
20	2.4	16.3	4.5	4.0	1.0	3.0	3.0	0.5
24	2.9	23.4	6.0	4.0	1.4	3.5	3.5	0.7
30	3.6	27.5	6.5	5.0	1.9	3.5	4.0	0.9
36	4.4	39.5	7.0	6.0	3.4	4.5	4.5	1.6
42	5.1	53.8	8.0	7.0	5.1	5.5	5.0	2.5
48	5.8	70.3	9.0	8.0	7.4	6.0	6.0	3.7
54	6.5	89.0	10.0	9.0	10.3	7.0	6.5	5.3
60	7.3	110.0	11.0	10.0	13.9	7.5	7.5	7.3
66	8.0	132.9	12.5	11.0	18.9	8.5	8.0	9.6
72	8.7	158.6	13.5	12.0	24.0	9.0	9.0	12.3
78	9.4	185.6	14.5	13.0	30.0	10.0	9.5	15.6
84	10.1	215.3	15.5	14.0	37.1	10.5	10.5	19.5
90	10.9	247.1	16.5	15.0	45.0	11.5	11.0	23.9
96	11.6	281.2	18.0	16.0	55.5	12.5	11.5	28.9

I.D. (IN.)	Δ = 45° G (FT.)	THRUST (TONS)	EARTH A (FT.)	EARTH B (FT.)	EARTH VOL. (C.Y.)	ROCK A (FT.)	ROCK B (FT.)	ROCK VOL. (C.Y.)
4,6,8	1.5	3.9	2.0	2.0	0.2	1.5	1.5	0.1
10,12	2.2	8.7	3.5	2.5	0.5	2.0	2.5	0.3
16,18	3.2	19.5	4.5	4.5	1.2	3.0	3.5	0.6
20	3.6	24.1	5.5	4.5	1.5	3.5	3.5	0.7
24	4.3	34.6	8.0	4.5	2.3	4.5	4.0	1.1
30	5.4	40.6	8.5	5.0	3.2	5.5	4.0	1.6
36	6.5	58.5	10.0	6.0	5.3	6.5	4.5	2.6
42	7.5	79.6	11.5	7.0	8.1	8.0	5.0	4.2
48	8.6	104.0	13.0	8.0	11.9	9.0	6.0	6.3
54	9.7	131.5	15.0	9.0	17.1	10.5	6.5	8.9
60	10.7	162.4	16.5	10.0	23.1	11.0	7.5	12.0
66	11.8	196.5	18.0	11.0	30.1	12.0	8.5	16.2
72	12.9	233.9	19.5	12.0	38.6	14.0	8.5	20.7
78	13.9	274.5	21.5	13.0	49.8	14.5	9.5	25.9
84	15.0	318.4	23.0	14.0	61.2	15.5	10.5	32.6
90	16.1	365.5	24.5	15.0	74.5	17.5	10.5	39.6
96	17.1	415.6	26.0	16.0	89.5	18.5	11.5	48.5

I.D. (IN.)	Δ = 67.50° G (FT.)	THRUST (TONS)	EARTH A (FT.)	EARTH B (FT.)	EARTH VOL. (C.Y.)	ROCK A (FT.)	ROCK B (FT.)	ROCK VOL. (C.Y.)
4,6,8	2.1	5.6	3.0	2.0	0.3	2.0	1.5	0.2
10,12	3.1	12.6	5.5	2.5	0.8	3.5	2.0	0.4
16,18	4.7	28.3	7.5	4.0	1.9	5.5	3.0	0.9
20	5.2	34.9	9.0	4.0	2.3	5.5	3.5	1.2
24	6.2	50.3	11.5	4.5	3.5	6.5	4.0	1.6
30	7.8	58.9	12.0	5.0	4.8	7.5	4.0	2.2
36	9.4	84.9	14.5	6.0	8.2	9.5	4.5	3.8
42	10.9	115.5	17.0	7.0	12.8	11.0	5.5	6.3
48	12.5	150.9	19.0	8.0	18.4	13.0	6.0	9.2
54	14.0	191.0	21.5	9.0	26.0	15.0	6.5	12.9
60	15.6	235.8	24.0	10.0	35.6	16.0	7.5	17.6
66	17.1	285.3	26.0	11.0	46.0	18.0	8.0	23.0
72	18.7	339.5	28.5	12.0	57.8	19.0	9.0	28.4
78	20.2	398.5	31.0	13.0	75.7	21.0	9.5	37.4
84	21.8	462.1	33.5	14.0	94.7	22.0	10.5	46.5
90	23.3	530.5	35.5	15.0	114.4	24.5	11.0	58.2
96	24.9	603.6	38.0	16.0	138.9	25.5	12.0	70.0

I.D. (IN.)	Δ = 90° G (FT.)	THRUST (TONS)	EARTH A (FT.)	EARTH B (FT.)	EARTH VOL. (C.Y.)	ROCK A (FT.)	ROCK B (FT.)	ROCK VOL. (C.Y.)
4,6,8	2.7	7.1	5.0	1.5	0.4	2.0	2.0	0.2
10,12	4.0	16.0	6.5	2.5	1.0	3.5	2.5	0.5
16,18	6.0	36.0	9.0	4.0	2.4	4.5	4.0	1.0
20	6.6	44.4	10.0	4.5	3.1	6.0	4.0	1.5
24	7.9	64.0	14.5	4.5	5.0	8.0	4.0	2.1
30	9.9	75.0	15.0	5.0	6.7	10.0	4.0	3.3
36	11.9	108.0	18.0	6.0	11.4	12.0	4.5	5.3
42	13.9	147.0	21.0	7.0	17.8	14.0	5.5	8.7
48	15.9	192.0	24.0	8.0	26.2	16.0	6.0	12.4
54	17.9	243.0	27.00	9.0	36.9	18.0	7.0	18.1
60	19.9	299.8	30.0	10.0	50.3	20.0	7.5	24.0
66	21.8	362.8	33.0	11.0	66.2	22.0	8.5	32.5
72	23.8	431.8	36.0	12.0	85.6	24.0	9.0	41.0
78	25.7	506.7	39.0	13.0	108.2	26.0	10.0	53.2
84	27.7	587.7	42.0	14.0	134.4	28.0	10.5	64.8
90	29.0	674.6	45.0	15.0	164.9	30.0	11.5	81.2
96	31.6	767.5	48.0	16.0	199.0	32.0	12.0	95.1

FRISCO — STANDARD CONSTRUCTION DETAIL — HORIZONTAL THRUST BLOCK AT PIPE BEND SHEET 3 OF 3 — SCALE: N.T.S. — REVISED: MAR 2012 — W03

O'Reilly AUTO PARTS
CORPORATE OFFICES
233 SOUTH PATTERSON
SPRINGFIELD, MISSOURI 65802
(417) 862-2674 TELEPHONE

PROJECT:
NEW O'REILLY AUTO PARTS STORE
S.H. 289 (PRESTON ROAD) & E. ASH STREET
CELINA, TEXAS

CITY DETAILS (CONT'D)

MO ANDERSON ENGINEERING, INC
ENGINEERS • SURVEYORS • LABORATORIES • DRILLING
2045 W. WOODLAND • SPRINGFIELD, MISSOURI 65807 • PHONE (417) 866-2741
ANDERSON COA# F-3704 • NEIL S. BRADY PE# 88145

PROJ #: 10178-14 | BY: ATH | CKD: NSB
DRAWING #: WB-110-061

DRAWN BY: AH | CHECKED BY: NB
DATE: 10/27/14
REVISION:
PROJECT NUMBER: CEA
SHEET NUMBER

P-201406-01

© COPYRIGHT 2014 – DESIGNS, DRAWINGS AND SPECIFICATIONS ARE INSTRUMENTS OF SERVICE AND ARE THE PROPERTY OF THE DESIGN PROFESSIONAL. REPRODUCTION PROHIBITED WITHOUT THE EXPRESSED WRITTEN CONSENT OF THE DESIGN PROFESSIONAL.