ENGINEERING PLANS FOR THE CONSTRUCTION OF

PRAIRIE CROSSING

(COUNTY ROAD 51)

AT

LIGHT FARMS

COLLIN COUNTY, TEXAS

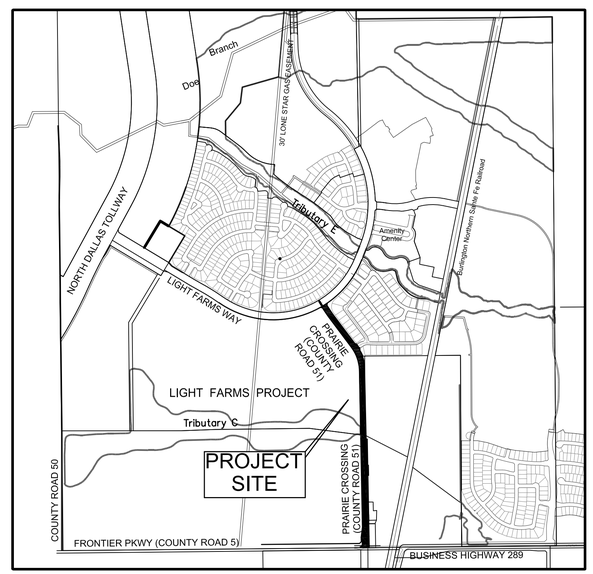

LOCATION MAP

N.T.S.

NORTH

INDEX OF DRAWINGS

SHEET NO.	DESCRIPTION	REV. NO. - DATE
00-00	COVER SHEET	1 - 9/17/2013
00-01	GENERAL NOTES	
00-02	TCEQ GENERAL NOTES	
01-01	CONSTRUCTION PLAT	
02-01	EXISTING CONDITIONS PLAN	
02-02	EXISTING CONDITIONS PLAN	
02-03	DEMO PLAN	1 - 9/17/2013
02-04	DEMO PLAN	1 - 9/17/2013
03-01	EROSION CONTROL PLAN - PRE-CONST.	1 - 9/17/2013
03-02	EROSION CONTROL PLAN - POST-CONST.	1 - 9/17/2013
03-03	EROSION CONTROL DETAILS	
04-01	PAVING PLAN	1 - 9/17/2013
04-02	PAVING PLAN	1 - 9/17/2013
04-03	PAVING PLAN	1 - 9/17/2013
04-04	PAVING PLAN	1 - 9/17/2013
04-05	PAVING PLAN	1 - 9/17/2013
04-06	PAVING PLAN CROSS SECTIONS	1 - 9/17/2013
04-07	PAVING PLAN CROSS SECTIONS	1 - 9/17/2013
04-08	PAVING PLAN CROSS SECTIONS	1 - 9/17/2013
04-09	PAVING PLAN CROSS SECTIONS	1 - 9/17/2013
05-01	STRIPING AND SIGNAGE PLAN	1 - 9/17/2013
05-02	STRIPING AND SIGNAGE PLAN	1 - 9/17/2013
06-01	AREA DRAINAGE MAP	
06-02	AREA DRAINAGE CALCULATIONS	
07-01	STORM DRAINAGE PLAN & PROFILE - LINE 'E1'	1 - 9/17/2013
07-02	STORM DRAINAGE PLAN & PROFILE - LINE 'E1' & 'D'	1 - 9/17/2013
07-03	STORM DRAINAGE PLAN & PROFILE - LINE 'C'	1 - 9/17/2013
07-04	STORM DRAINAGE PLAN & PROFILE - LINE 'C'	1 - 9/17/2013
07-05	STORM DRAINAGE PLAN & PROFILE - LINE 'B'	1 - 9/17/2013
07-06	STORM DRAINAGE PLAN & PROFILE - LINE 'B' CONT.	1 - 9/17/2013
07-07	CULVERT PLAN DETAIL	1 - 9/17/2013
08-01	WATER PLAN AND PROFILE	1 - 9/17/2013
CS 1-12	CITY STANDARD DETAILS	1 - 9/17/2013
BC(10)-07	TXDOT DETAIL - BARRICADE AND CONSTRUCTION STANDARD	
TCP(1-2)-12	TXDOT DETAIL - TRAFFIC CONTROL PLAN - LANE CLOSURE	
TCP(1-4)-12	TXDOT DETAIL - TRAFFIC CONTROL PLAN - LANE CLOSURE	
CH-FW-0	TXDOT DETAIL - CONCRETE HEADWALL - FLARED WINGS	
PW-0	TXDOT DETAIL - CONCRETE WINGWALL - PARALLEL WINGS	
MC-7-10	TXDOT DETAIL - MULTIPLE CONCRETE CULVERT - C.I.P. - 1/2	
MC-7-10	TXDOT DETAIL - MULTIPLE CONCRETE CULVERT - C.I.P. - 2/2	
ECD	TXDOT DETAIL - EXTENDED CURB	
SGT(7S)31-11	TXDOT DETAIL - SINGLE GUARDRAIL TERMINAL - STEEL POST	
SGT(7)31-11	TXDOT DETAIL - SINGLE GUARDRAIL TERMINAL - WOOD POST	
GF(31)-11	TXDOT DETAIL - METAL BEAM GUARD FENCE	
TYPE T6	TXDOT DETAIL - TRAFFIC RAIL	
TYPE C221	TXDOT DETAIL - COMBINATION RAIL	
PM(1)-12	TXDOT DETAIL - STANDARD PAVEMENT MARKINGS	
PED-12A	TXDOT DETAIL - PEDESTRIAN FACILITIES - CURB RAMP	
PED-12A	TXDOT DETAIL - PEDESTRIAN FACILITIES - GENERAL NOTES	

Owner/Developer

LFC LAND COMPANY, LLC

8401 North Central Expressway Suite 350
Dallas, Texas 75252
Phone: 214-292-3410 Fax 214-292-3411

Prepared For:

COLLIN COUNTY MUNICIPAL UTILITY DISTRICT NO. 1

C/O LFC LAND COMPANY, LLC
8401 North Central Expressway Suite 350
Dallas, Texas 75252
Phone: 214-292-3410 Fax 214-292-3411

Prepared By:

HUITT-ZOLLARS

Huitt-Zollars, Inc. Dallas
1717 McKinney Avenue, Suite 1400
Dallas, Texas 75202-1236
Phone (214) 871-3311 Fax (214) 871-0757

STATE OF TEXAS
ROBERT M. STENGELE
50145
REGISTERED PROFESSIONAL ENGINEER
11-5-14

ISSUE FOR CONSTRUCTION
Date: 03-06-14
Huitt-Zollars, Inc.
Firm Registration No. F-761

DWG: I:\proj\013905\01\390530 - CR51\DWG\RECORD DRAWINGS 11-7-14\00-00 COVER SHEET.dwg USER: jcooper
DATE: Nov 05, 2014 1:30pm XREFS: BASE-CR51 LF-MASTER-BASE BASE RECORD DOCUMENTS NOTE BLOCK

GENERAL NOTES

1. ALL CONSTRUCTION SHALL BE IN ACCORDANCE WITH THE LATEST REVISION OF THE NORTH CENTRAL TEXAS COUNCIL OF GOVERNMENTS (NCTCOG) "STANDARD SPECIFICATIONS FOR PUBLIC WORKS CONSTRUCTION INCLUDING THE STANDARD DRAWINGS THEREIN AND THE CITY OF CELINA'S ADDENDUM THERETO. CONTRACTOR SHALL HAVE ATLEAST ONCE SET OF APPROVED ENGINEERING PLANS AND SPECIFICATIONS ON-SITE AT ALL TIMES. SEE SUPPLEMENTARY CONDITIONS, SC-3.02.

2. BEFORE BEGINNING CONSTRUCTION, THE CONTRACTOR SHALL PREPARE A CONSTRUCTION SEQUENCE SCHEDULE. THE CONSTRUCTION SCHEDULE SHALL BE SUCH THAT THERE IS THE MINIMUM INTERFERENCE WITH TRAFFIC ALONG OR ADJACENT TO THE PROJECT.

3. CONSTRUCTION MAY NOT BEGIN EARLIER THAN 7:00 A.M. ON WEEKDAYS NOR CONTINUE AFTER DARK WITHOUT PERMISSION FROM THE CITY OF CELINA. CONSTRUCTION ON HOLIDAYS AND SATURDAY MUST BE APPROVED TWO DAYS IN ADVANCE, A FEE OF $300.00 A DAY FOR WORKING ON HOLIDAYS AND SATURDAY WILL BE ASSESSED PAYABLE TO THE CITY BEFORE WORK IS PREFORMED. WORK MAY NOT BE BEGIN BEFORE 8:00 A.M. AND WORK ON SUNDAY IS PROHIBITED WITHOUT SPECIAL PERMISSION AND PAYMENT OF FEES.

4. UTILITIES SHOWN ON THE PLANS WERE TAKEN FROM FIELD SURVEYS AND INFORMATION PROVIDED BY THE UTILITY COMPANIES. THE COMPLETENESS AND THE ACCURACY OF THIS DATA IS NOT GUARANTEED. THE CONTRACTOR IS RESPONSIBLE FOR VERIFYING THE LOCATION OF ALL UNDERGROUND UTILITIES AND STRUCTURES AND PROTECTING THEM FROM DAMAGE DURING CONSTRUCTION. IT WILL BE THE RESPONSIBILITY OF EACH CONTRACTOR TO PROTECT ALL EXISTING PUBLIC AND PRIVATE UTILITIES THROUGHOUT THE CONSTRUCTION OF THIS PROJECT. CONTRACTOR SHALL CONTACT THE APPROPRIATE UTILITY COMPANIES FOR LINE LOCATION PRIOR TO COMMENCEMENT OF CONSTRUCTION AND SHALL ASSUME FULL LIABILITY TO THOSE COMPANIES FOR ANY DAMAGES CAUSED TO THEIR FACILITIES.

5. WORK MAY NOT BE BACKFILLED OR COVERED UNTIL THE CITY HAS INSPECTED IT.

6. THE OWNER WILL PAY FOR FIRST TIME MATERIAL TESTING. ANY RETESTING WILL BE AT CONTRACTOR'S EXPENSE. MATERIAL TESTING SHALL BE PERFORMED BY AN INDEPENDENT TESTING LABORATORY OF OWNER'S CHOICE. THE FOLLOWING MATERIAL TESTS SHALL BE PROVIDED BY THE CONTRACTOR:
- 6.A. EMBANKMENT - ONE SOIL DENSITY TEST SHALL BE PERFORMED AT EACH LOCATION FOR EACH 500 C.Y. OF BACKFILL PLACED.
- 6.B. PAVEMENT SUB GRADE - ONE GRADATION TEST (WHERE LIME STABILIZED) AND ONE SOIL DENSITY TEST SHALL BE PERFORMED FOR EACH 100 LINEAR FEET OF PAVEMENT UNLESS OTHERWISE NOTED. GRADATIONS MUST PASS 100% THROUGH A 1¾" SIEVE AND 60% THROUGH A #4 SIEVE.
- 6.C. UTILITY TRENCH BACKFILL - ONE SOIL DENSITY TEST SHALL BE PERFORMED A 300 FEET INTERVALS OR AS DIRECTED BY THE INSPECTOR.
- 6.D. CONCRETE TESTS:
  - 6.D.1. COMPRESSIVE STRENGTH - AS SPECIFIED BY NCTCOG SPECIFICATIONS OR CITY SPECIFICATIONS. CONCRETE WITH A TEMPERATURE ABOVE 95°F WILL BE REJECTED.
  - 6.D.2. AIR CONTENT - ONE TEST FOR EVERY 25 CY OF CONCRETE OR FRACTION THEREOF UNLESS OTHERWISE NOTED.
  - 6.D.3. SLUMP - ONE TEST FOR EVERY 9 CY OF CONCRETE OR FRACTION THEREOF UNLESS OTHERWISE NOTED.
  - 6.D.4. ADDITIONAL CYLINDERS AND/OR TESTS MAY BE REQUIRED AT THE INSPECTOR'S DISCRETION.
- 6.E. THE CITY SHALL SELECT THE LOCATION AND DEPTH OF EACH SOIL DENSITY TEST, UNLESS OTHERWISE DIRECTED.

7. ALL EXCAVATION ON THE PROJECT IS UNCLASSIFIED.

8. TEMPORARY EROSION CONTROL SHALL BE USED TO MINIMIZE THE SPREAD OF SILT AND MUD FROM THE PROJECT ON TO EXISTING STREETS, ALLEYS, DRAINAGE WAYS AND PUBLIC AND PRIVATE PROPERTY. TEMPORARY EROSION CONTROLS MAY INCLUDE SILT FENCES, ROCK CHECK DAMS, STABILIZED CONSTRUCTION ENTRANCES, STRAW BALES, BERMS, DIKES, SWALES, STRIPS OF UNDISTURBED VEGETATION, CHECK DAMS AND OTHER METHODS AS REQUIRED BY THE CITY MANAGER OR HIS REPRESENTATIVE AND SHALL CONFORM TO THE STORM WATER QUALITY BEST MANAGEMENT PRACTICES FOR CONSTRUCTION ACTIVITIES AS PUBLISHED BY THE NORTH CENTRAL TEXAS COUNCIL OF GOVERNMENTS AND THE CITY OF CELINA EROSION AND SEDIMENT CONTROL MANUAL.

9. FINISHED SLOPES ON PUBLIC RIGHTS-OF-WAY AND EASEMENTS SHALL NOT BE STEEPER THAN 4:1. ALL SLOPES STEEPER THAN 6:1 SHALL BE COVERED WITH EROSION CONTROL MATTING AND ARE HYDRO MULCHED AND MAINTAINED BY THE CONTRACTOR UNTIL GRASS COVERS ALL PARTS OF THE SLOPE.

10. THE CONTRACTOR SHALL MAINTAIN TWO-WAY TRAFFIC AT ALL TIMES ALONG THE PROJECT.

11. REMOVE, SALVAGE AND REPLACE ALL STREET AND TRAFFIC CONTROL SIGNS, WHICH MAY BE DAMAGED BY THE CONSTRUCTION OF THE PROJECT.

12. ALL TRENCHING AND EXCAVATION SHALL BE PERFORMED IN ACCORDANCE WITH OSHA STANDARDS. TRENCH SAFETY DESIGN WILL BE THE RESPONSIBILITY OF THE CONTRACTOR. CONTRACTOR SHALL SUBMIT A TRENCH SAFETY DESIGN APPROVED BY A PROFESSIONAL ENGINEER TO THE CITY FOR REVIEW PRIOR TO THE START OF ANY UNDERGROUND UTILITY CONSTRUCTION.

13. PRIOR TO ANY CONSTRUCTION THE CONTRACTOR SHALL FAMILIARIZE HIMSELF WITH THE CONTRACT DOCUMENTS AND SPECIFICATIONS, THE PLANS INCLUDING ALL NOTES, AND OTHER APPLICABLE STANDARDS OR SPECIFICATIONS RELEVANT TO THE PROPER COMPLETION OF THE WORK SPECIFIED. FAILURE ON THE PART OF THE CONTRACTOR TO FAMILIARIZE HIMSELF WITH ALL STANDARDS OR SPECIFICATIONS PERTAINING TO THIS WORK SHALL IN NO WAY RELIEVE THE CONTRACTOR OF RESPONSIBILITY FOR PERFORMING THE WORK IN ACCORDANCE WITH ALL SUCH APPLICABLE STANDARDS AND SPECIFICATIONS.

14. CONTRACTOR SHALL HAVE IN HIS POSSESSION, PRIOR TO CONSTRUCTION, ALL NECESSARY PERMITS, AND LICENSES, ETC. CONTRACTOR SHALL HAVE AT LEAST ONE SET OF APPROVED ENGINEERING PLANS AND SPECIFICATIONS ON-SITE AT ALL TIMES.

15. IN THE EVENT AN ITEM IS NOT COVERED IN THE NORTH CENTRAL TEXAS COUNCIL OF GOVERNMENTS (NCTCOG) STANDARD SPECIFICATIONS FOR PUBLIC WORKS CONSTRUCTION, THE CONTRACTOR SHALL PROVIDE AN ALTERNATIVE TO THE OWNER AND ENGINEER. THE ENGINEER SHALL REVIEW AND APPROVE CONSTRUCTION MATERIALS, SHOP DRAWINGS AND SPECIFICATIONS.

16. CONSTRUCTION OBSERVATION WILL BE PERFORMED BY REPRESENTATIVES OF THE OWNER, ENGINEER, DISTRICT, GEOTECHNICAL ENGINEER, AND REVIEWING AUTHORITIES AND AGENCIES. UNRESTRICTED ACCESS SHALL BE PROVIDED TO THEM AT ALL TIMES. CONTRACTOR IS RESPONSIBLE FOR UNDERSTANDING AND SCHEDULING REQUIRED INSPECTIONS.

17. ALL CONTRACTORS MUST CONFINE THEIR ACTIVITIES TO THE WORK AREA. NO ENCROACHMENTS ONTO DEVELOPED OR UNDEVELOPED AREAS WILL BE ALLOWED, UNLESS SPECIFICALLY NOTED ON PLANS. ANY DAMAGE RESULTING THERE FROM SHALL BE CONTRACTOR'S RESPONSIBILITY TO REPAIR.

18. IT WILL BE THE RESPONSIBILITY OF EACH CONTRACTOR TO PROTECT ALL EXISTING PUBLIC AND PRIVATE UTILITIES THROUGHOUT THE CONSTRUCTION OF THIS PROJECT. CONTRACTOR SHALL CONTACT THE APPROPRIATE UTILITY COMPANIES FOR LINE LOCATIONS PRIOR TO COMMENCEMENT OF CONSTRUCTION AND SHALL ASSUME FULL LIABILITY TO THOSE COMPANIES FOR ANY DAMAGES CAUSED TO THEIR FACILITIES.

19. CONSTRUCTION STAKING WILL BE PERFORMED BY OWNER'S ENGINEER. SEE SUPPLEMENTARY CONDITIONS, SC-4.05.

20. IF UNFORESEEN PROBLEMS OR CONFLICTS ARE ENCOUNTERED IN THE CONSTRUCTION, FOR WHICH AN IMMEDIATE SOLUTION IS NOT APPARENT, THE ENGINEER AND OWNER SHALL BE NOTIFIED IMMEDIATELY.

21. CONTRACTORS SHALL BE RESPONSIBLE FOR FIELD LOCATIONS AND WORKING AROUND EXISTING UTILITIES AND IMPROVEMENTS. SEE SUPPLEMENTARY CONDITIONS, SC-4.02 AND SC-6.13.

22. TRAFFIC CONTROL MEASURES SHALL BE INSTALLED FOR ANY WORK ACTIVITY THAT TAKES PLACE ON OR ADJACENT TO ANY PUBLIC STREET OR ROADWAY. TRAFFIC CONTROL MEASURES SHALL CONFORM TO PART IV OF THE TEXAS MANUAL ON UNIFORM TRAFFIC CONTROL DEVICES.

23. THE CONTRACTOR SHALL PROVIDE A TRENCH SAFETY PLAN AND BE RESPONSIBLE FOR FIELD VERIFYING ALL EXISTING UTILITY LOCATIONS PRIOR TO HIS WORK.

24. ALL PIPE PRICES SHALL INCLUDE REQUIRED EMBEDMENT PER PLANS AND SPECIFICATIONS.

GRADING NOTES

1. HAUL ROADS ARE SUBSIDIARY TO THIS CONTRACT.

2. TOPSOIL STRIPPING & REPLACEMENT: THIS CONTRACT REQUIRES THAT A NOMINAL 3-INCH DEPTH OF TOPSOIL BE STRIPPED FROM ALL CLEARED AND GRUBBED AREAS. TOPSOIL STRIPPINGS SHALL BE INCORPORATED INTO LANDSCAPE AREAS OUTSIDE OVERBUILT PADS. IN STREET PARKWAYS, MEDIANS, OPEN SPACE, EARTHEN DRAINAGE DITCHES AND SWALES FOR ALL SUBDIVISIONS, A MINIMUM OF 4 INCHES OF TOPSOIL SHALL BE PLACED IN ADVANCE OF GRASSING OPERATIONS. THE GRADING OPERATIONS SHALL ACCOMMODATE TOPSOIL TO BE PLACED IN THESE DESIGNATED AREAS. STOCKPILED TOP SOIL SHALL BE PROTECTED FROM EROSION WITH APPROPRIATE EROSION CONTROL MEASURES AT ALL TIMES. ONCE THE EXCESS MATERIAL HAS BEEN PLACED AND COMPACTED THE TOP SOIL SHALL BE EVENLY REDISTRIBUTED ON TOP OF THE PLACED FILL BEFORE BEING REVEGETATED.

3. REGRADING WORK SHALL BE CLOSELY COORDINATED WITH THE OWNER AND ENGINEER BEFORE AND AS THE WORK IS BEING ACCOMPLISHED. ONCE STARTED, THIS WORK SHALL BE PROSECUTED WITH DILIGENCE UNTIL COMPLETE.

4. ALL NEW WORK SHALL SLOPE UNIFORMLY BETWEEN SPOT ELEVATIONS UNLESS NOTED OTHERWISE. PROVIDE POSITIVE DRAINAGE ON ALL FINISH GRADES.

5. MASS GRADING: MASS GRADING OPERATIONS SHALL BE PERFORMED IN CONFORMANCE WITH THE RECOMMENDATIONS IN THE PRELIMINARY GEOTECHNICAL INVESTIGATIONS AS PROVIDED IN CONTRACT DOCUMENTS. COMPACTION OF ALL FILL MATERIAL SHALL BE A MINIMUM OF 95% OF STANDARD PROCTOR DENSITY AS DETERMINED BY ASTM D 698 OR AS REQUIRED IN THE PRELIMINARY GEOTECHNICAL INVESTIGATION. THE MOISTURE CONTENT OF ALL FILL MATERIAL SHALL BE NEAR ITS OPTIMUM MOISTURE CONTENT (ASTM D 69B); DRY SOILS SHALL HAVE WATER ADDED AND WET SOILS SHALL BE AERATED, SO THAT ALL SOIL PLACEMENT WILL MEET DENSITY REQUIREMENTS.

6. CLEARING AREAS TO BE FILLED: IN AREAS TO BE FILLED, ALL TREES, STUMPS, BRUSH, ABANDONED STRUCTURES, ROOTS, TOPSOIL, VEGETATION, SEDIMENTS, LARGE ROCK FRAGMENTS, RUBBISH, AND ANY OTHER UNDESIRABLE OR DELETERIOUS MATTER SHOULD BE PROPERLY REMOVED AND DISPOSED OF. ALL TOPSOIL, ROOTS, OTHER VEGETATION AND LOOSE OR SOFT SOILS SHOULD BE STRIPPED TO A DEPTH OF 6 INCHES AND THE EXPOSED SURFACE SHOULD BE SCARIFIED TO AN ADDITIONAL DEPTH OF AT LEAST 6 INCHES. TO THE EXTENT PRACTICAL, IT IS RECOMMENDED THAT TREES SCHEDULED FOR REMOVAL IN THE VICINITY OF PROPOSED SLAB-ON-GRADE FOUNDATIONS BE REMOVED AS FAR IN ADVANCE OF SLAB CONSTRUCTION AS POSSIBLE. THIS WILL TEND TO RESTORE A MORE FAVORABLE SOIL MOISTURE EQUILIBRIUM WHICH WILL, IN TURN, TEND TO MINIMIZE THE POTENTIAL FOR GREATER THAN ANTICIPATED POST-CONSTRUCTION GROUND MOVEMENTS. TREES SHOULD BE EXCAVATED TO BELOW THEIR ROOT BALLS. THEN THE EXCAVATION SHOULD BE FILLED WITH SOIL SIMILAR TO THE SURROUNDING SOIL. THE FILL SHOULD BE CONSTRUCTED IN ACCORDANCE WITH THE RECOMMENDATIONS PRESENTED IN THE PRELIMINARY GEOTECHNICAL INVESTIGATION.

7. WATERING: WATERING OF EARTHWORK PLACED IN FILL AREAS MAY BE NECESSARY TO ACHIEVE THE SPECIFIED MOISTURE DENSITY REQUIREMENT, AND TO GERMINATE/SUSTAIN GRASS COVER IN AREAS TO RECEIVE A VEGETATIVE COVER AFTER GRADING IS COMPLETE. THE CONTRACTOR MAY REQUEST A FIRE HYDRANT METER FROM THE CITY OF CELINA FOR CONSTRUCTION WATER USE OR OBTAIN WATER FROM AN ALTERNATE SOURCE. NO EXTRA PAYMENT WILL BE MADE TO THE CONTRACTOR FOR WATER.

8. SWALE AND FINE GRADING OF LOTS: THE TOLERANCE FOR FINE GRADING OF THE LOT PADS AND OTHER AREAS UNDER THIS CONTRACT IS PLUS OR MINUS 0.30 FEET. SURFACES SHALL BE GRADED STRAIGHT AND SMOOTH BETWEEN CONTROL POINTS OR GRADES, WITHOUT BULGES OR DEPRESSIONS, AS DETAILED ON THE DRAWINGS. SEE REQUIREMENTS FOR TOPSOIL PLACEMENT IN NOTE #1 ABOVE.

9. SWALES ARE TO BE GRADED AS SHOWN ON THE GRADING PLANS. FINE GRADING CONSISTS OF CREATING A SMOOTH FINISHED LEVEL HOUSE PAD WITH A UNIFORM TRANSITION TO SIDE YARD SWALES AND FRONT YARD SLOPES TO THE RIGHT-OF-WAY AND CURB.

10. CONTRACTOR IS HEREBY DIRECTED TO ENSURE THAT ALL SWALES, AS SHOWN ON THE GRADING PLANS, ARE PROPERLY INSTALLED. AT LOCATIONS WHERE RETAINING WALLS EXIST AND/OR ARE PROPOSED BEHIND, BESIDE OR BETWEEN LOTS, SWALES MUST BE CREATED ON THE UPPER LOT DIRECTLY BEHIND THE WALL AND ON THE LOWER LOT ADJACENT TO THE WALL WHERE SHOWN TO CONVEY SURFACE DRAINAGE IN THE DIRECTION SHOWN ON THE GRADING PLAN.

11. REESTABLISHMENT OF VEGETATION: ESTABLISHMENT OF VEGETATION SHALL BE INITIATED IMMEDIATELY AFTER COMPLETING GRADING AND IN NO CASE LATER THAN 14 DAYS AFTER COMPLETION OF GRADING. THE CONTRACTOR WILL BE REQUIRED TO BROADCAST SEED AND FERTILIZER ON FINISHED LOTS. TILLING WILL NOT BE REQUIRED. THE SEED MIX SHALL BE 50% UNHULLED BERMUDA AND 50% FOXTAIL MILLET-GERMAN STRAIN R APPLIED AT A RATE OF 10 LBS. PER ACRE. 10-10-10 FERTILIZER SHALL BE APPLIED AT THE RATE OF 200 LBS. PER ACRE OR AS RECOMMENDED BY THE FERTILIZER MANUFACTURER. THE UNIT PRICE BID FOR "REVEGETATION OF GRADED LOTS" SHALL INCLUDE ALL COSTS ASSOCIATED WITH PROVIDING AND SPREADING SEED AND FERTILIZER. THE VEGETATION MUST ACHIEVE A COVER THAT IS 70 PERCENT OF THE NATIVE BACKGROUND VEGETATIVE COVER TO BE CONSIDERED FINAL STABILIZATION.

WATER AND SANITARY SEWER

1. SPECIFICATIONS AND DETAILS ARE NOT MEANT TO EXCLUDE ANY MANUFACTURER. ANY SPECIFICATION OR DETAIL MAY BE REPLACED WITH AN APPROVED EQUAL UPON APPROVAL BY THE CITY OF CELINA.

2. WATER MAINS SHALL BE AWWA C-900 PVC OR 905 PVC CLASS 200 UNLESS OTHERWISE NOTED. MINIMUM COVER FOR WATERLINES IS 48" BELOW TOP OF CURB, 60" WHERE NO CURBED STREET IS PRESENT OR AS REQUIRED TO CLEAR EXISTING UTILITIES, WHICHEVER IS GREATER. CLASS "B+" EMBEDMENT UNLESS OTHERWISE NOTED. FITTINGS, EMBEDMENT, AND THRUST BLOCKING ARE SUBSIDIARY TO THE UNIT PRICE.

3. ALL UTILITY TRENCH BACKFILL SHALL BE PERFORMED IN 12" LOOSE LIFTS AND MECHANICALLY COMPACTED WITH APPROVED VIBRATORY METHODS. WATER JETTING IS PROHIBITED.

4. MARKING TAPE SHALL BE INSTALLED ONE FOOT ABOVE AND OVER PVC WATER LINES.

5. FITTINGS FOR PVC WATER LINES SHALL BE DUCTILE IRON AND BE ENCASED IN A POLYETHYLENE SHEATH, AND ARE SUBSIDIARY TO THE UNIT PRICE FOR WATER LINE.

6. ALL MECHANICAL JOINTS WILL BE RESTRAINED. (MEGA-LUG, ETC.)

7. VALVES, INCLUDING TAPPING VALVES SHALL BE RESILIENT SEAT GATE VALVES, UNLESS OTHERWISE NOTED.

8. ALL DIRECT BURIAL VALVES SHALL BE PROVIDED WITH CAST IRON VALVE BOXES WITH PVC STACKS. VALVE STACKS SHALL BE VERTICAL AND CONCENTRIC WITH THE VALVE STEM. STAINLESS STEEL VALVE EXTENSIONS ARE REQUIRED ON ALL VALVES WHERE THE OPERATING NUT IS GREATER THAN 4 FEET BELOW FINISHED GRADE.

9. FIRE HYDRANTS SHALL BE WATEROUS OR EQUAL AS DIRECTED OR APPROVED BY THE CITY OF CELINA ON A CASE BY CASE BASIS AND FIELD PAINTED SILVER WITH BONNET AND CAPS COLOR-CODED TO PIPE SIZE.
- 9.A. SIX INCH LINE- SILVER BODY WITH RED BONNET AND CAPS.
- 9.B. EIGHT INCH LINE- SILVER BODY WITH BLUE BONNET AND CAPS.
- 9.C. TEN INCH LINE- SILVER BODY WITH GREEN BONNET AND CAPS.
- 9.D. TWELVE INCH AND LARGER- SILVER BODY WITH YELLOW BONNET AND CAPS.

10. ALL EXPOSED BOLTING ON ANY BURIED EQUIPMENT OR MATERIAL SHALL BE STAINLESS STEEL. INCLUDED ARE:
- 10.A. BONNET AND STUFFING BOX BOLTS ON VALVES.
- 10.B. SHOE BOLTS ON FIRE HYDRANTS.
- 10.C. FLANGE BOLTS.
- 10.D. "COR-TEN" MECHANICAL JOINT "T" BOLTS ARE ACCEPTABLE FOR DIRECT BURIAL SERVICE.

11. DEPENDING ON METER SIZE; METER BOXES SHALL BE DFW37C-12-1SAF, DFW38C-14-1SAF, DFW65C-14-1SAF, OR APPROVED EQUAL, AND SHALL INCORPORATE THE CELINA LOGO IN THE LID.

12. ONE SAMPLE STATION SHALL BE PROVIDED FOR EVERY 250 CONNECTIONS.

13. FIRE HYDRANT ASSEMBLY: FIRE HYDRANT ASSEMBLY SHALL INCLUDE A 6" PVC LEAD, 6" VALVE, FITTINGS, CONCRETE BLOCKING, AND THE FIRE HYDRANT.

14. WATER METERS: WATER METERS WILL BE SET AT A LATER DATE BY OTHERS. UTILITY CONTRACTOR WILL BE RESPONSIBLE FOR MAKING THE TAP, INSTALLING THE COPPER SERVICE LINE PER NCTCOG STANDARD DETAILS, PROVIDING THE CURB STOP AND DEADHEAD VALVES, AND PROPERLY PLACING A METER BOX. LOCATOR PADS SHALL BE PLACED AT ALL VALVE LOCATIONS. THE LOCATOR PAD SHALL BECOME THE PROPERTY OF THE CITY. THE TERM 'WATER METER BOX' AND 'WATER METER CAN' ARE USED INTERCHANGEABLY.

15. SANITARY SEWER MAINS SHALL BE DR 35 PVC. EMBEDMENT SHALL BE CLASS H UNLESS OTHERWISE NOTED.
- 15.A. THE CONTRACTOR SHALL INSTALL AND MAINTAIN WATERTIGHT PLUGS IN ALL CONNECTIONS TO THE CITY'S SANITARY SEWER SYSTEM UNTIL THE CITY ACCEPTS THE PROJECT.
- 15.B. ALL SANITARY SEWER LINES AND MANHOLES SHALL BE LEAK TESTED BEFORE THE PROJECT IS ACCEPTED. DEFLECTION TESTING OF PVC SEWER LINES IS REQUIRED. DEFLECTION SHALL BE TESTED WITH A MANDREL FOR 5% DEFLECTION.
- 15.C. ALL SEWER LINES SHALL BE VIDEO INSPECTED WITH A COPY OF THE VIDEO AND STATION REPORT SUBMITTED TO THE INSPECTOR.
- 15.D. MANDREL, AIR TEST, AND VIDEO INSPECTION SHALL NOT BE PERFORMED UNTIL ALL UTILITIES ARE COMPLETE, IN PLACE, AND BACKFILLED.

16. SANITARY SEWER STUB-OUTS FROM MANHOLES SHALL BE FITTED WITH WATER TIGHT STOPPER OR CAP.

17. STUB-OUTS FROM MANHOLES SHALL BE A MINIMUM OF 5-FT LONG WITH CONCRETE CRADLE (FROM SAME POUR) UNDER THE ENTIRE LENGTH PER NCTCOG STANDARD DRAWING NO. 5020 AND 5030, DATED OCTOBER 2004, AND NCTCOG STANDARD DRAWING NO. 3010 CLASS "A" EMBEDMENT, DATED OCTOBER 2004.

18. ALL VALVES, FIRE HYDRANTS, METER BOXES, SEWER SERVICES, SEWER MANHOLES, AND SEWER CLEANOUTS REQUIRE CURB MARKS PER CITY STANDARDS.

19. HYDROSTATIC LEAKAGE RATE FOR POLYVINYL CHLORIDE (PVC) PIPE SHALL NOT EXCEED AMOUNT ALLOWED OR RECOMMENDED BY AWWA FORMULA:

$$Q=(LD(P^{0.5}))/148{,}000$$

WHERE Q=QUANTITY OF MAKEUP WATER IN GALLONS PER HOUR; L=LENGTH OF THE PIPE SECTION BEING TESTED; D=NOMINAL DIAMETER OF THE PIPE IN INCHES; AND P=AVERAGE TEST PRESSURE DURING THE HYDROSTATIC TEST IN POUNDS PER SQUARE INCH (PSI).

STORM DRAINAGE CONSTRUCTION NOTES

3. STORM SEWER PIPE SHALL BE REINFORCED CONCRETE, CLASS III UNLESS OTHERWISE NOTED.

4. ALL STRUCTURAL CONCRETE SHALL BE CLASS "C" (3600 PSI COMPRESSIVE STRENGTH AT 28 DAYS), AIR ENTRAINED.

5. THE CONTRACTOR SHALL INSTALL PLUGS IN STORM SEWER LINES OR OTHERWISE PREVENT MUD FROM ENTERING THE STORM SEWER SYSTEM DURING CONSTRUCTION.

6. INLET BLOCKOUTS, VARIABLE CURB, AND INLET TOP WILL BE THE UTILITY CONTRACTOR'S RESPONSIBILITY FOLLOWING PAVING OPERATIONS. INLET BLOCKOUTS SHALL BE PLACED 3.5 FEET FROM BACK OF CURB FOR A DISTANCE OF TEN (10) FEET UPSTREAM (BOTH SIDES IN SAG CONDITIONS) AND FIVE (5) FEET DOWNSTREAM OF THE INSIDE FACE OF INLET. UNLESS OTHERWISE NOTED IN CONSTRUCTION PLANS.

7. STORM DRAINAGE PIPE AND HEADWALLS: UNLESS NOTED OTHERWISE ON THE PLANS, ALL STORM DRAINAGE PIPE SHALL BE CLASS III AND EMBEDMENT SHALL BE CLASS "C" PER NORTH CENTRAL TEXAS COUNCIL OF GOVERNMENTS STANDARD SPECIFICATIONS FOR PUBLIC WORKS CONSTRUCTION, STANDARD DRAWING NO. 3040. THE UNIT PRICE SUPPLIED FOR THE CONSTRUCTION OF THE STORM HEADWALLS SHALL INCLUDE VALUE FOR THE NECESSARY EXCAVATION/GRADE-TO-DRAIN ACTIVITY CONSIDERED SUBSIDIARY TO THE INSTALLATION OF THE STORM OUTFALL STRUCTURES. THE EXCAVATED CHANNEL SHALL HAVE A MINIMUM 1% LONGITUDINAL SLOPE AND MINIMUM BOTTOM WIDTH OF TWICE THE WIDTH OF THE OUTFALLING PIPE OR BOX, UNLESS OTHERWISE NOTED, AND SHALL HAVE THE EMBANKMENTS SLOPED BACK AT A 3:1 SLOPE.

8. INLET BOTTOM CONSTRUCTION: WITHIN 24 HOURS OF THE COMPLETION OF THE CONSTRUCTED INLET BOTTOM, EROSION CONTROL MEASURES SHALL BE EMPLOYED AS SHOWN IN THE NCTCOG EROSION CONTROL DETAILS. INTERIM EROSION CONTROL MEASURES SHALL BE EMPLOYED UNTIL THE CONCRETE FOR THE INLET BASE HAS SET AND THE REQUIRED EROSION CONTROL MEASURES INSTALLED.

9. ROCK RIP RAP: THE PLACEMENT OF ROCK RIP-RAP AT STORM DRAINAGE OUTFALLS WILL BE DELAYED UNTIL THE COMPLETION OF ALL UTILITY WORK. THE ROCK RIP-RAP MAY ALSO BE DESIGNATED FOR PLACEMENT ON THE FRESH EMBANKMENTS TO STABILIZE THE SLOPES.

UTILITY SEPARATION NOTES

1. SEPARATION DISTANCES BETWEEN PUBLIC WATER SUPPLY PIPES AND SANITARY SEWER COLLECTION SYSTEMS OR MANHOLES MUST COMPLY WITH 30 TAC 217.53(D) AND 30TAC 290.44(E).

2. COLLECTION SYSTEM PIPES MUST BE INSTALLED IN TRENCHES SEPARATE FROM PUBLIC WATER SUPPLY TRENCHES.

3. COLLECTION SYSTEM PIPES MUST BE NO CLOSER THAN NINE FEET IN ANY DIRECTION TO A PUBLIC WATER SUPPLY LINE.

4. WHERE THE NINE-FOOT SEPARATION DISTANCE CANNOT BE ACHIEVED, THE FOLLOWING CRITERIA SHALL APPLY.
- 4.A. A.MINIMUM SANITARY SEWER PIPE SEGMENT LENGTH SHALL BE AT LEAST 18-FEET WHERE THE NINE-FOOT SEPARATION DISTANCE CANNOT BE ACHIEVED.
- 4.B. WHERE A NEW POTABLE WATERLINE CROSSES AN EXISTING, NON-PRESSURE RATED SANITARY SEWER MAIN OR LATERAL, ONE SEGMENT OF THE WATERLINE PIPE SHALL BE CENTERED OVER THE SANITARY SEWER MAIN OR LATERAL SUCH THAT THE JOINTS OF THE WATERLINE PIPE ARE EQUIDISTANT AND AT LEAST NINE FEET HORIZONTALLY FROM THE CENTERLINE OF THE SANITARY SEWER MAIN OR LATERAL. THE POTABLE WATERLINE SHALL BE AT LEAST TWO FEET ABOVE THE SANITARY SEWER MAIN OR LATERAL. WHENEVER POSSIBLE, THE CROSSING SHALL BE CENTERED BETWEEN THE JOINTS OF THE SANITARY SEWER MAIN OR LATERAL. IF THE EXISTING SANITARY SEWER MAIN OR LATERAL IS DISTURBED OR SHOWS SIGNS OF LEAKING, IT SHALL BE REPLACED FOR AT LEAST NINE FEET IN BOTH DIRECTIONS (18 FEET TOTAL) WITH AT LEAST 150 PSI PRESSURE RATED PIPE.
- 4.C. WHERE A NEW POTABLE WATERLINE CROSSES A NEW, NON-PRESSURE RATED SANITARY SEWER MAIN OR LATERAL AND THE STANDARD PIPE SEGMENT LENGTH OF THE SANITARY SEWER MAIN OR LATERAL IS AT LEAST 18 FEET, ONE SEGMENT OF THE WATERLINE PIPE SHALL BE CENTERED OVER THE SANITARY SEWER MAIN OR LATERAL SUCH THAT THE JOINTS OF THE WATERLINE PIPE ARE EQUIDISTANT AND AT LEAST NINE FEET HORIZONTALLY FROM THE CENTERLINE OF THE SANITARY SEWER MAIN OR LATERAL. THE POTABLE WATERLINE SHALL BE AT LEAST TWO FEET ABOVE THE SANITARY SEWER MAIN OR LATERAL. WHENEVER POSSIBLE, THE CROSSING SHALL BE CENTERED BETWEEN THE JOINTS OF THE SANITARY SEWER MAIN OR LATERAL. THE SANITARY SEWER PIPE SHALL HAVE A MINIMUM PIPE STIFFNESS OF 115 PSI AT 5.0% DEFLECTION. THE SANITARY SEWER MAIN OR LATERAL SHALL BE EMBEDDED IN CEMENT STABILIZED SAND FOR THE TOTAL LENGTH OF ONE PIPE SEGMENT PLUS 12 INCHES BEYOND THE JOINT ON EACH END. WHERE SHOWN, THE SANITARY SEWER LINE SHALL BE CONSTRUCTED OF 150 PSI PRESSURE RATED PIPE.
- 4.D. WHERE CEMENT STABILIZED SAND BEDDING IS REQUIRED, THE CEMENT STABILIZED SAND SHALL HAVE A MINIMUM OF 10% CEMENT PER CUBIC YARD OF CEMENT STABILIZED SAND MIXTURE, BASED ON LOOSE DRY WEIGHT VOLUME (AT LEAST 2.5 BAGS OF CEMENT PER CUBIC YARD OF MIXTURE). THE CEMENT STABILIZED SAND BEDDING SHALL BE A MINIMUM OF SIX INCHES ABOVE AND FOUR INCHES BELOW THE SANITARY SEWER MAIN OR LATERAL.
- 4.E. WHEN A NEW WATERLINE CROSSES UNDER A SANITARY SEWER MAIN OR LATERAL, ALL SECTIONS OF WATERLINE WITHIN NINE FEET HORIZONTALLY OF THE SANITARY SEWER MAIN OR LATERAL SHALL BE ENCASED IN AN 18-FOOT (OR LONGER) SECTION OF PIPE. FLEXIBLE ENCASING PIPE SHALL HAVE A MINIMUM PIPE STIFFNESS OF 115 PSI AT 5.0% DEFLECTION. THE ENCASING PIPE SHALL BE CENTERED ON THE WATERLINE AND SHALL BE AT LEAST TWO NOMINAL PIPE DIAMETERS LARGER THAN THE SANITARY SEWER MAIN OR LATERAL. THE SPACE AROUND THE CARRIER PIPE SHALL BE SUPPORTED AT FIVE-FOOT (OR LESS) INTERVALS WITH SPACERS OR BE FILLED TO THE SPRINGLINE WITH WASHED SAND. EACH END OF THE CASING SHALL BE SEALED WITH WATERTIGHT NON-SHRINK CEMENT GROUT OR A MANUFACTURED WATERTIGHT SEAL. IN LIEU OF THE ENCASEMENT, THE WATERLINE CAN ALSO BE CONSTRUCTED OF DUCTILE IRON OR STEEL PIPE WITH MECHANICAL OR WELDED JOINTS AS APPROPRIATE. AN ABSOLUTE MINIMUM SEPARATION DISTANCE OF ONE FOOT BETWEEN THE WATERLINE AND THE SANITARY SEWER MAIN OR LATERAL SHALL BE PROVIDED.
- 4.F. WATERLINE AND SANITARY SEWER MAIN OR LATERAL MANHOLE OR CLEANOUT SEPARATION: THE SEPARATION DISTANCE FROM A POTABLE WATERLINE TO A SANITARY SEWER MAIN OR LATERAL MANHOLE OR CLEANOUT SHALL BE A MINIMUM OF NINE FEET. WHERE THE NINE-FOOT SEPARATION DISTANCE CANNOT BE ACHIEVED, THE POTABLE WATERLINE SHALL BE ENCASED IN A JOINT OF AT LEAST 150 PSI PRESSURE CLASS PIPE AT LEAST 18 FEET LONG AND TWO NOMINAL SIZES LARGER THAN THE NEW CONVEYANCE. THE SPACE AROUND THE CARRIER PIPE SHALL BE SUPPORTED AT FIVE-FOOT INTERVALS WITH SPACERS OR BE FILLED TO THE SPRINGLINE WITH WASHED SAND. THE ENCASEMENT PIPE SHALL BE CENTERED ON THE CROSSING AND BOTH ENDS SEALED WITH CEMENT GROUT OR MANUFACTURED SEALANT.
- 4.G. LOCATION OF FIRE HYDRANTS: FIRE HYDRANTS SHALL NOT BE INSTALLED WITHIN NINE FEET VERTICALLY OR HORIZONTALLY OF ANY SANITARY SEWER MAIN, SANITARY SEWER LATERAL, OR SANITARY SEWER SERVICE LINE REGARDLESS OF CONSTRUCTION.

PAVING NOTES

1. ALL EMBANKMENTS SHALL BE COMPACTED TO 95% STANDARD PROCTOR DENSITY.

2. ALL STREETS AND ALLEYS SHALL BE PLACED ON LIME STABILIZED SUB GRADE WITH A LIME CONTENT NOT LESS THAN 7% OR AS APPROVED BY THE CITY ENGINEER.

3. THE MINIMUM 28 DAY COMPRESSIVE STRENGTH OF CONCRETE STREET PAVING SHALL NOT BE LESS THAN 3600 PSI AND SHALL BE AIR ENTRAINED. WATER MAY NOT BE APPLIED TO THE SURFACE OF CONCRETE PAVING TO IMPROVE WORKABILITY.

4. ALL CURB AND GUTTER SHALL BE INTEGRAL WITH THE PAVEMENT.

5. PARABOLIC CROWNS ARE REQUIRED ON ALL STREET PAVEMENTS EXCEPT ON MAJOR THOROUGHFARES WHERE STRAIGHT SECTIONS ARE REQUIRED.

6. STREETS AND ALLEYS SHALL BE CONSTRUCTED WITH PROVISIONS FOR SIDEWALK RAMPS AT ALL INTERSECTIONS.

STATE OF TEXAS
ROBERT M. STENGELE
50145
REGISTERED
PROFESSIONAL ENGINEER
11-5-14
Date: 11-05-2014

Huitt-Zollars, Inc.
Firm Registration No. F-761

RECORD DRAWING

THIS RECORD DOCUMENT HAS BEEN PREPARED BASED IN PART UPON INFORMATION FURNISHED BY OTHERS. THE DESIGN PROFESSIONAL CANNOT ASSURE THE ACCURACY OF OTHERS' INFORMATION AND THUS IS NOT RESPONSIBLE FOR THE ACCURACY OF THIS RECORD DOCUMENT OR FOR ANY ERROR OR OMISSION THAT MAY HAVE BEEN INCORPORATED INTO IT AS A RESULT. THOSE RELYING ON THIS RECORD DOCUMENT ARE ADVIDED TO OBTAIN INDEPENDENT VERIFICATION OF ITS ACCURACY BEFORE APPLYING IT FOR ANT PURPOSE.

LIGHT FARMS

GENERAL NOTES

PRAIRIE CROSSING
(EX. COUNTY ROAD 51)

COLLIN COUNTY MUNICIPAL UTILITY DISTRICT NO.1

LFC LAND COMPANY, LLC
8401 North Central Expressway, Suite 350, Dallas, Texas 75225
Phone (214) 292-3410 Fax (214) 292-3411

HUITT-ZOLLARS
Huitt-Zollars, Inc. Dallas
1717 McKinney Avenue, Suite 1400
Dallas, Texas 75202-1236
Phone (214) 871-3311 Fax (214) 871-0757

SCALE	SHEET No.

DATE	00-01
7/30/2014	

PROJECT NUMBER: 01-3905-30

DWG: I:\proj\01390501\01390530 - CR51\DWG\RECORD DRAWINGS 11-7-14\00-01 GENERAL NOTES.dwg USER: jcooper
DATE: Nov 05, 2014 1:43pm XREFS: GBS

CAD FILE PATH: i:\proj\01390501\01390530 - cr51\dwg\record drawings 11-7-14\00-01 general notes.dwg

P-201312-01

OWNER'S CERTIFICATE
STATE OF TEXAS
COUNTY OF COLLIN

BEING a tract of land situated in the John Ragsdale Survey, Abstract No. 734, Collin County, Texas, and being a portion of the 597.17 acre tract of land described as Tract A in instrument to LFC LAND COMPANY, LLC as recorded under Document No. 20120423000464780 of the Land Records of Collin County, Texas, and being more particularly described as follows:

BEGINNING at a 5/8 inch iron rod found with a yellow plastic cap at the most southerly southeast corner of said LFC Land Company tract, said corner being near the centerline of County Road 51;

THENCE North 89 degrees 44 minutes 17 seconds West along a south line of the LFC Land Company tract, a distance of 50.01 feet to a 60d nail found;

THENCE departing the south line of the LFC Land Company tract, North 01 degree 06 minutes 02 seconds West, a distance of 885.69 feet to a 5/8 inch iron rod set with plastic cap stamped "Huitt-Zollars" at the beginning of a curve to the left having a delta angle of 35 degrees 46 minutes 21 seconds, a radius of 565.00 feet, being subtended by a chord which bears North 18 degrees 59 minutes 13 seconds West, a distance of 347.06 feet;

THENCE along said curve an arc length of 352.76 feet to a 5/8 inch iron rod set with plastic cap stamped "Huitt-Zollars" at the end of said curve;

THENCE North 36 degrees 52 minutes 24 seconds West, a distance of 533.54 feet to a 5/8 inch iron rod set with plastic cap stamped "Huitt-Zollars" at the beginning of a curve to the right having a delta angle of 04 degrees 42 minutes 40 seconds, a radius of 635.00 feet, being subtended by a chord which bears North 34 degrees 31 minutes 03 seconds West, a distance of 52.20 feet;

THENCE along said curve an arc length of 52.21 feet to a 5/8 inch iron rod set with plastic cap stamped "Huitt-Zollars" at the end of said curve;

THENCE North 32 degrees 09 minutes 43 seconds West, a distance of 95.87 feet to a 5/8 inch iron rod set with plastic cap stamped "Huitt-Zollars";

THENCE North 76 degrees 11 minutes 34 seconds West, a distance of 28.76 feet to a 5/8 inch iron rod set with plastic cap stamped "Huitt-Zollars" on the southeasterly right-of-way line of Light Farms Way (a 100 foot wide right-of-way at this point as recorded in Volume 2009, Page 422 of the Plat Records of Collin County, Texas) and being the beginning of a non-tangent curve to the left having a delta angle of 04 degrees 44 minutes 21 seconds, a radius of 1,330.00 feet, being subtended by a chord which bears North 57 degrees 50 minutes 14 seconds East, a distance of 109.98 feet;

THENCE along said curve an arc length of 110.00 feet to a 5/8 inch iron rod set with plastic cap stamped "Huitt-Zollars" at the end of said curve;

THENCE departing the southeasterly right-of-way line of Light Farms Way, South 11 degrees 52 minutes 05 seconds West a distance of 28.76 feet to a 5/8 inch iron rod set with plastic cap stamped "Huitt-Zollars";

THENCE South 32 degrees 09 minutes 43 seconds East, a distance of 95.88 feet to a 5/8 inch iron rod set with plastic cap stamped "Huitt-Zollars" at the beginning of a curve to the left having a delta angle of 04 degrees 42 minutes 40 seconds, a radius of 565.00 feet, being subtended by a chord which bears South 34 degrees 31 minutes 03 seconds East, a distance of 46.44 feet;

THENCE along said curve an arc length of 46.46 feet to a 5/8 inch iron rod set with plastic cap stamped "Huitt-Zollars" at the end of said curve;

THENCE South 36 degrees 52 minutes 24 seconds East a distance of 521.48 feet to a 5/8 inch iron rod set with plastic cap stamped "Huitt-Zollars";

THENCE South 79 degrees 49 minutes 25 seconds East a distance of 24.01 feet to a 5/8 inch iron rod set with plastic cap stamped "Huitt-Zollars";

THENCE South 32 degrees 40 minutes 06 seconds East a distance of 88.35 feet to a 5/8 inch iron rod set with plastic cap stamped "Huitt-Zollars";

THENCE South 11 degrees 06 minutes 03 seconds West a distance of 14.10 feet to a 5/8 inch iron rod set with plastic cap stamped "Huitt-Zollars"at the beginning of a non-tangent curve to the right having a delta angle of 13 degrees 45 minutes 59 seconds, a radius of 385.00 feet, being subtended by a chord which bears South 26 degrees 48 minutes 19 seconds East, a distance of 92.28 feet;

THENCE along said curve an arc length of 92.50 feet to a 5/8 inch iron rod set with plastic cap stamped "Huitt-Zollars" at the end of said curve and being an inner ell corner of said LFC Land Company tract;

THENCE South 01 degree 06 minutes 02 seconds East along an east line of said LFC Land Company tract, a distance of 1,090.95 feet to the POINT OF BEGINNING and CONTAINING 2.769 acres of land, more or less.

NOW, THEREFORE, KNOW ALL MEN BY THESE PRESENTS:

That LFC LAND COMPANY, LLC, and COLLIN COUNTY MUNICIPAL UTILITY DISTRICT No.1 acting herein by and through his(its) duly authorized officer(s), does hereby adopt this plat designating the herein above described property as PRAIRIE CROSSING (COUNTY ROAD 51) at LIGHT FARMS, additions within the extra-territorial jurisdiction of the City of Celina, Texas, and does hereby dedicate, in fee simple, to the public use forever, the streets, rights-of-way, and other public improvements shown thereon. The streets and alleys, if any, are dedicated for street purposes.
The easements and public use areas, as shown, are dedicated, for the public use forever, for the purposes indicated on this plat. No buildings, fences, trees, shrubs or other improvements or growths shall be constructed or placed upon, over or across the easements as shown, except that landscape improvements may by placed in landscape easements, if approved by the City Council of the City of Celina. In addition, utility easements may also be used for the mutual use and accommodation of all public utilities desiring to use or using the same unless the easements limits the use to particular utilities, said use by public utilities being subordinate to the public's and City of Celina's use thereof. The City of Celina and public utilities entities shall have the right to remove and keep removed all or parts of any buildings, fences, trees, shrubs or other improvements or growths which may in any way endanger or interfere with the construction, maintenance, or efficiency of their respective systems in said easements, The City of Celina and public utility entities shall at all times have the full right of ingress and egress to or from their respective easements for the purpose of constructing, reconstructing, inspecting, patrolling, maintaining, reading meters, and adding to or removing all or parts of their respective systems without the necessiity at any time procuring permission from anyone.

This plat approved subject to all platting ordinances, rules, regulations and resolutions of the City of Celina, Texas,

WITNESS, my hand, this the ______ day of __________ , 2014.

By:

____
Authorized Signature of LFC LAND COMPANY, LLC.

____
Printed Name and Title

STATE OF TEXAS
COUNTY OF

Before me, the undersigned authority, a Notary Public in and for the State of Texas, on this day personally appeared ____________________ , Owner, known to me to be the person whose name is subscribed to the foregoing instrument and acknowledged to me that he executed the same for the purpose and considerations therein expressed.

Given under my hand and seal of office, this ______ day of __________ , 2014.

____
Notary Public in and for the State of Texas

My Commission Expires On: ____________________

WITNESS, my hand, this the ______ day of __________ , 2014.

By:

Authorized Signature of
COLLIN COUNTY MUNICIPAL UTILITY DISTRICT No. 1

____
Printed Name and Title

STATE OF TEXAS
COUNTY OF

Before me, the undersigned authority, a Notary Public in and for the State of Texas, on this day personally appeared _____________ , Owner, known to me to be the person whose name is subscribed to the foregoing instrument and acknowledged to me that he executed the same for the purpose and considerations therein expressed.

Given under my hand and seal of office, this ______day of _____ , 2014.

____
Notary Public in and for the State of Texas

My Commission Expires On: ____________________

KNOW ALL MEN BY THESE PRESENTS:

THAT, I, Eric J. Yahoudy do hereby certify that I prepared this plat from an actual and accurate survey of the land and that the corner monuments shown thereon were properly placed under my personal supervision, in accordance with the subdivision regulations of the City of Celina, Texas.

PRELIMINARY, THIS DOCUMENT SHALL NOT BE RECORDED FOR ANY PURPOSE. ISSUED FOR REVIEW ON JUNE 26, 2014.

Eric J. Yahoudy, Registered Professional Land Surveyor
Texas Registration No. 4862

Date

STATE OF TEXAS
COUNTY OF DALLAS

Before me, the undersigned authority, a Notary Public in and for the State of Texas, on this day personally appeared Eric J. Yahoudy, known to me to be the person whose name is subscribed to the foregoing instrument and acknowledged to me that he executed the same for the purpose and considerations therein expressed.

Given under my hand and seal of office, this ______ day of __________ , 2014.

Notary Public in and for the State of Texas

My Commission Expires On:

PROPERTY LOCATION STATEMENT
This property is located in the extraterritorial jurisdiction of the City of Celina, Collin County, Texas.

Signature of Mayor	Date of approval
ATTEST:	
City Secretary	Date

Approved for preparation of final plat following construction of all public improvements (or appropriate sureties thereof) necessary for the subdivision shown on the plat.

RECOMMENDED BY:	Planning and Zoning Commission City of Celina, Texas
Signature of Chairperson	Date of Recommendation
APPROVED BY:	City Council City of Celina, Texas
Signature of Mayor	Date of Approval
ATTEST:	City Council City of Celina, Texas
City Secretary	Date

NOTES:

SELLING A PORTION OF THIS ADDITION BY METES AND BOUNDS IS A VIOLATION OF CITY ORDINANCE AND STATE LAW, AND IS SUBJECT TO FINES AND WITHHOLDING OF UTILITIES AND BUILDING PERMITS.

RECORD DRAWING

THIS RECORD DOCUMENT HAS BEEN PREPARED BASED IN PART UPON INFORMATION FURNISED BY OTHERS. THE DESIGN PROFESSIONAL CANNOT ASSURE THE ACCURACY OF OTHERS' INFORMATION AND THUS IS NOT RESPONSIBLE FOR THE ACCURACY OF THIS RECORD DOCUMENT OR FOR ANY ERROR OR OMISSION THAT MAY HAVE BEEN INCORPORATED INTO IT AS A RESULT. THOSE RELYING ON THIS RECORD DOCUMENT ARE ADVIDED TO OBTAIN INDEPENDENT VERIFICATION OF ITS ACCURACY BEFORE APPLYING IT FOR ANT PURPOSE.

CONSTRUCTION PLAT
PRAIRIE CROSSING
(COUNTY ROAD 51)
AT
LIGHT FARMS
2.769 ACRES
SITUATED IN THE
JOHN RAGSDALE SURVEY, ABSTRACT No. 734
COLLIN COUNTY, TEXAS
MARCH, 2014

OWNER/DEVELOPER
LFC LAND COMPANY, LLC.
8401 North Central Expressway, Suite 350, Dallas, TX 75225
Phone 214-292-3410 Fax 214-292-3411

PREPARED BY:
HUITT-ZOLLARS
Huitt-Zollars, Inc. Dallas
1717 McKinney Avenue, Suite 1400, Dallas, TX 75202
Phone (214) 871-3311 Fax (214) 871-0757

2/2

CAD FILE PATH:

DWG: I:\proj\01390501\01390530 - CR51\DWG\RECORD DRAWINGS 11-7-14\01-01 CONSTRUCTION PLAT.dwg USER: jcooper
DATE: Nov 05, 2014 1:39pm XREFS: GBS BASE-CR51 390502-MASTER FILE LF-MASTER-BASE

PROJECT NUMBER: 01-3905-30

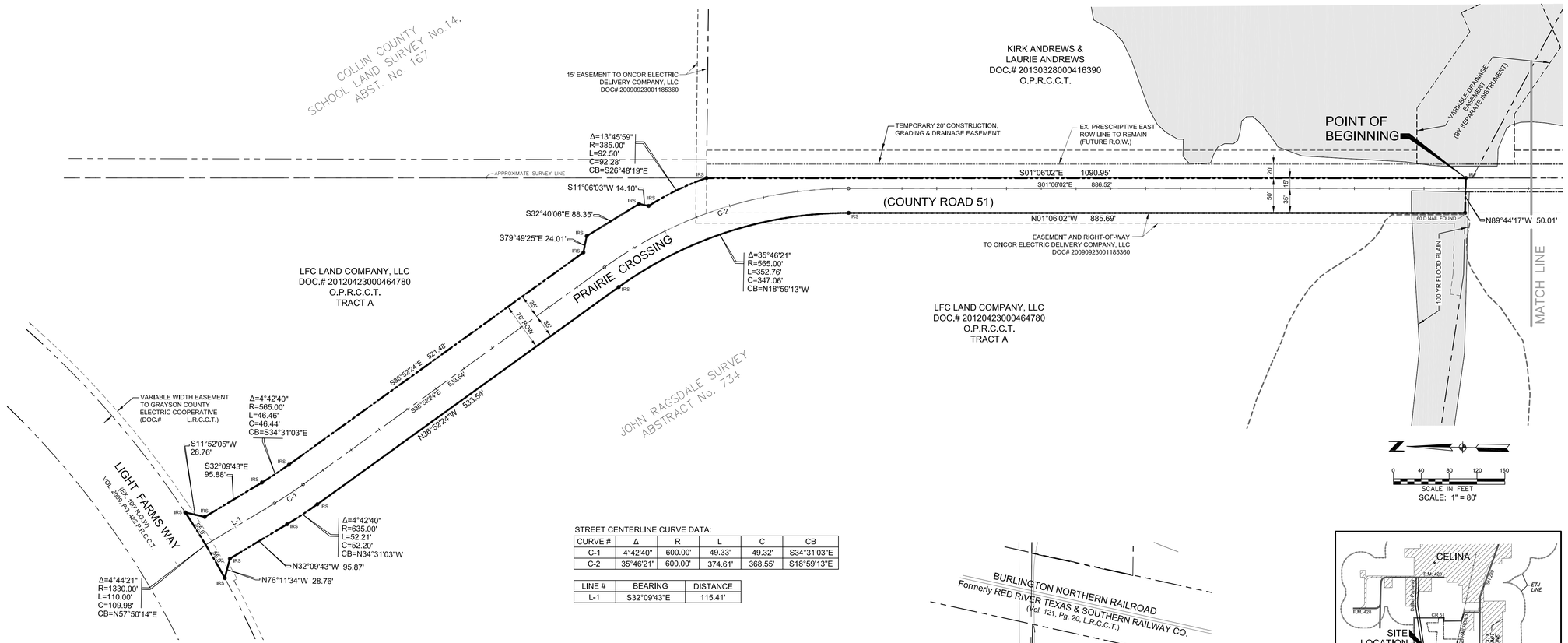

STREET CENTERLINE CURVE DATA:

CURVE #	Δ	R	L	C	CB
C-1	4°42'40"	600.00'	49.33'	49.32'	S34°31'03"E
C-2	35°46'21"	600.00'	374.61'	368.55'	S18°59'13"E

LINE #	BEARING	DISTANCE
L-1	S32°09'43"E	115.41'

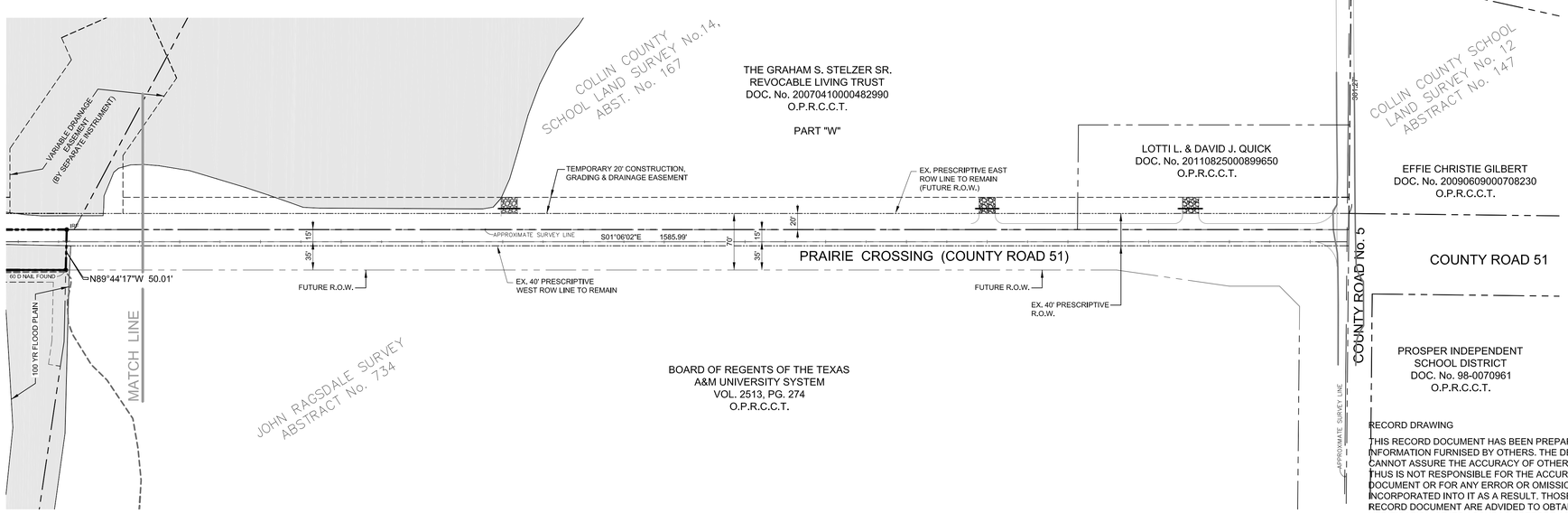

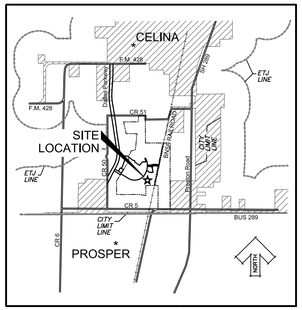

VICINITY MAP

CONSTRUCTION PLAT

PRAIRIE CROSSING

(COUNTY ROAD 51)

AT

LIGHT FARMS

2.769 ACRES

SITUATED IN THE

JOHN RAGSDALE SURVEY, ABSTRACT No. 734

COLLIN COUNTY, TEXAS

MARCH, 2014

RECORD DRAWING

THIS RECORD DOCUMENT HAS BEEN PREPARED BASED IN PART UPON INFORMATION FURNISED BY OTHERS. THE DESIGN PROFESSIONAL CANNOT ASSURE THE ACCURACY OF OTHERS' INFORMATION AND THUS IS NOT RESPONSIBLE FOR THE ACCURACY OF THIS RECORD DOCUMENT OR FOR ANY ERROR OR OMISSION THAT MAY HAVE BEEN INCORPORATED INTO IT AS A RESULT. THOSE RELYING ON THIS RECORD DOCUMENT ARE ADVIDED TO OBTAIN INDEPENDENT VERIFICATION OF ITS ACCURACY BEFORE APPLYING IT FOR ANT PURPOSE.

OWNER/DEVELOPER

LFC LAND COMPANY, LLC.

8401 North Central Expressway, Suite 350, Dallas, TX 75225
Phone 214-292-3410 Fax 214-292-3411

PREPARED BY:

HUITT-ZOLLARS

Huitt-Zollars, Inc. Dallas
1717 McKinney Avenue, Suite 1400, Dallas, TX 75202
Phone (214) 871-3311 Fax (214) 871-0757

1/2

PROJECT NUMBER: 01-3905-30

DWG: I:\proj\013905\01013905\0530 - CR51\DWG\RECORD DRAWINGS 11-7-14\01-01 CONSTRUCTION PLAT.dwg USER: jcooper
DATE: Nov 05, 2014 3:03pm XREFS: GBS BASE-CR51 390502-MASTER FILE LF-MASTER-BASE

CAD FILE PATH:

P-201312-01

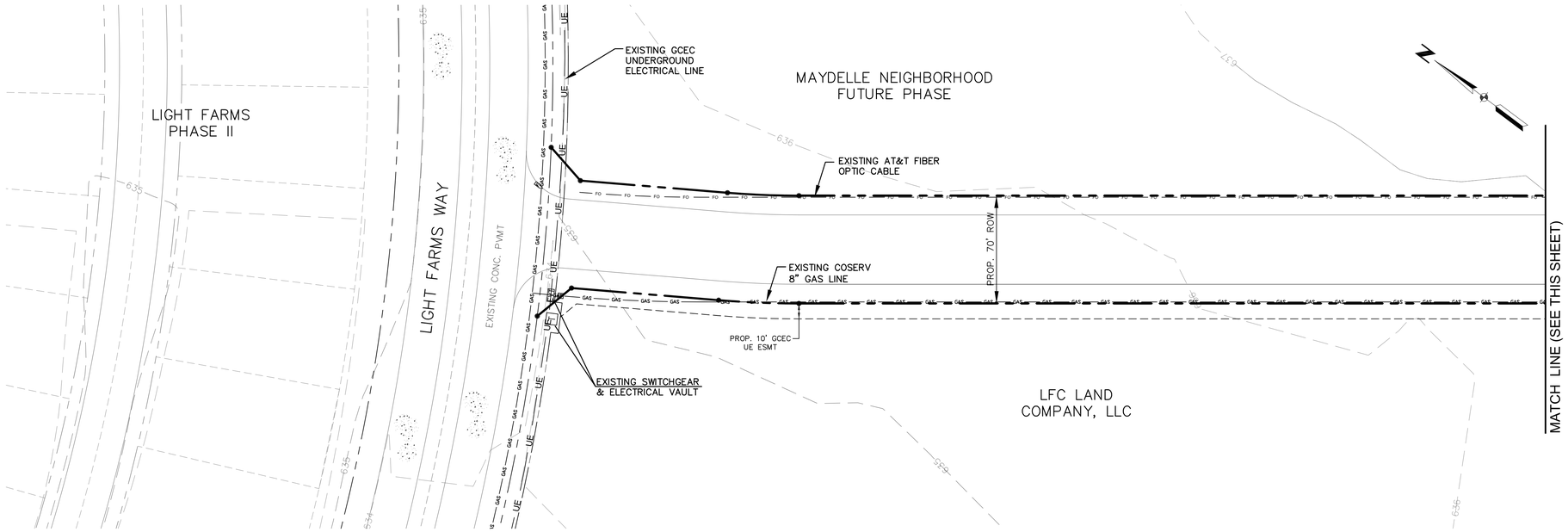

0 20 40 60 80
SCALE: 1" = 40'

LEGEND

- EX. MINOR CONTOUR
- EX. MAJOR CONTOUR
- PROP. ROW
- EX. FENCE
- EX. OVERHEAD ELEC.
- EX. GAS
- EX. FIBER OPTIC
- EX. UNDERGROUND ELEC.
- EX. EASEMENT
- EX. BOUNDARY LINE
- PROP. TEMP. ACCESS ESMT.
- EX. PRESCRIPTIVE ROW
- EX. GAS MARKER
- EX. FIBER OPTIC MARKER
- EX. STREET SIGN & POLE
- EX. POWER POLE
- EX. TREE/BUSH

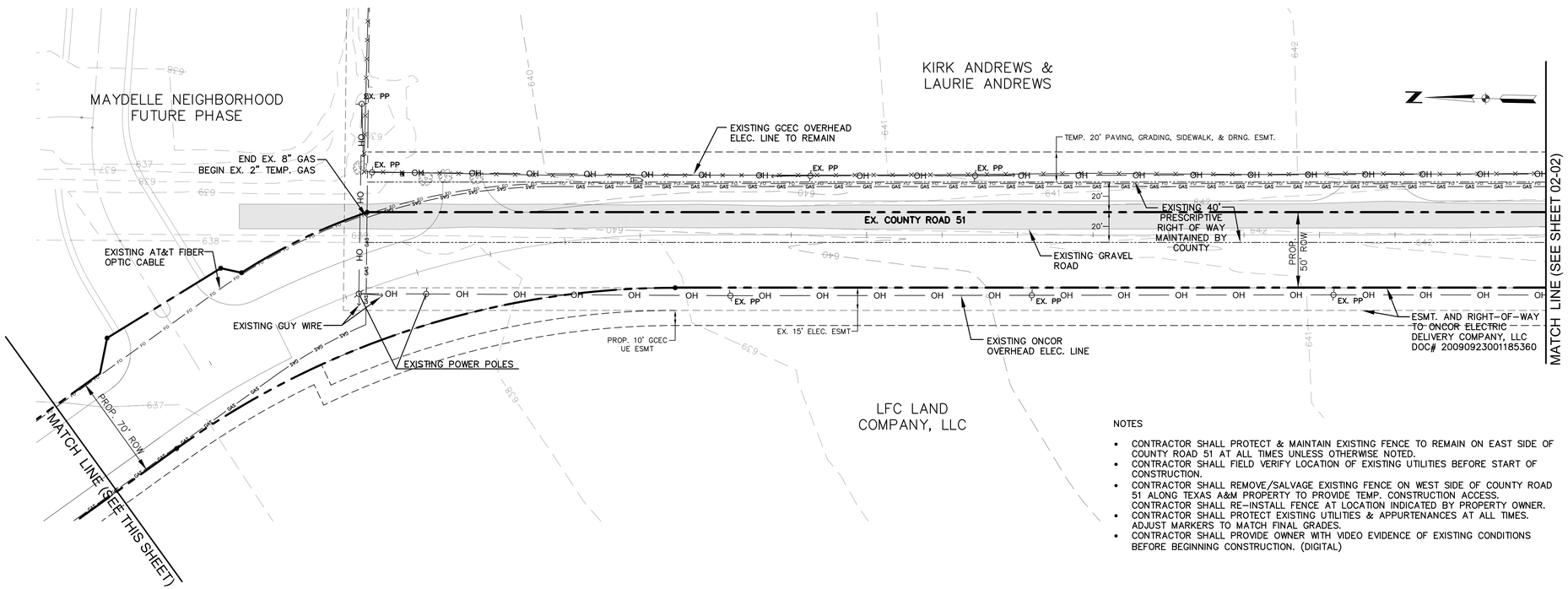

BASIS OF VERTICAL DATUM - NAVD 1988 based on National Geodetic Survey Benchmarks N-185 (Elevation 650.78') and H263 (Elevation - 643.81')

BENCHMARKS:

BM # 79 - Brass monument set on top of curb, southeast side of Light Farms Way, 520+- feet southwesterly from the centerline of Wildrye Ridge.
Elev. = 635.51'

BM # 80 - Brass monument set on curb inlet, southeast side of Light Farms Way, 79+- feet northeasterly from the centerline of Wildrye Ridge.
Elev. = 633.47'

STATE OF TEXAS
ROBERT M. STENGELE
50145
REGISTERED
PROFESSIONAL ENGINEER
11-5-14
Date: 11-05-2014

Hulitt-Zollars, Inc.
Firm Registration No. F-761

RECORD DRAWING

THIS RECORD DOCUMENT HAS BEEN PREPARED BASED IN PART UPON INFORMATION FURNISED BY OTHERS. THE DESIGN PROFESSIONAL CANNOT ASSURE THE ACCURACY OF OTHERS' INFORMATION AND THUS IS NOT RESPONSIBLE FOR THE ACCURACY OF THIS RECORD DOCUMENT OR FOR ANY ERROR OR OMISSION THAT MAY HAVE BEEN INCORPORATED INTO IT AS A RESULT. THOSE RELYING ON THIS RECORD DOCUMENT ARE ADVIDED TO OBTAIN INDEPENDENT VERIFICATION OF ITS ACCURACY BEFORE APPLYING IT FOR ANT PURPOSE.

NOTES

- CONTRACTOR SHALL PROTECT & MAINTAIN EXISTING FENCE TO REMAIN ON EAST SIDE OF COUNTY ROAD 51 AT ALL TIMES UNLESS OTHERWISE NOTED.
- CONTRACTOR SHALL FIELD VERIFY LOCATION OF EXISTING UTILITIES BEFORE START OF CONSTRUCTION.
- CONTRACTOR SHALL REMOVE/SALVAGE EXISTING FENCE ON WEST SIDE OF COUNTY ROAD 51 ALONG TEXAS A&M PROPERTY TO PROVIDE TEMP. CONSTRUCTION ACCESS. CONTRACTOR SHALL RE-INSTALL FENCE AT LOCATION INDICATED BY PROPERTY OWNER.
- CONTRACTOR SHALL PROTECT EXISTING UTILITIES & APPURTENANCES AT ALL TIMES. ADJUST MARKERS TO MATCH FINAL GRADES.
- CONTRACTOR SHALL PROVIDE OWNER WITH VIDEO EVIDENCE OF EXISTING CONDITIONS BEFORE BEGINNING CONSTRUCTION. (DIGITAL)

LIGHT FARMS

EXISTING CONDITIONS PLAN

PRAIRIE CROSSING

(EX. COUNTY ROAD 51)

COLLIN COUNTY MUNICIPAL UTILITY DISTRICT NO.1

LFC LAND COMPANY, LLC
8401 North Central Expressway, Suite 350, Dallas, Texas 75225
Phone (214) 292-3410 Fax (214) 292-3411

HULITT-ZOLLARS
Hulitt-Zollars, Inc. Dallas
1717 McKinney Avenue, Suite 1400
Dallas, Texas 75202-1236
Phone (214) 871-3311 Fax (214) 871-0757

SCALE AS SHOWN	SHEET No.
DATE 7/30/2014	02-01

PROJECT NUMBER: 01-3905-30

DWG: I:\proj\013905\01\1390530 - CR51\DWG\RECORD DRAWINGS 11-7-14\02-01 EXISTING CONDITIONS PLAN.dwg USER: jcooper
DATE: Nov 05, 2014 3:06pm XREFS: GBS LF-MASTER-BASE BASE-CR51 CR 51 TOPO EX-CONTOURS BASE
CAD FILE PATH: I:\proj\013905\01\1390530 - cr51\dwg\record drawings 11-7-14\02-01 existing conditions plan.dwg

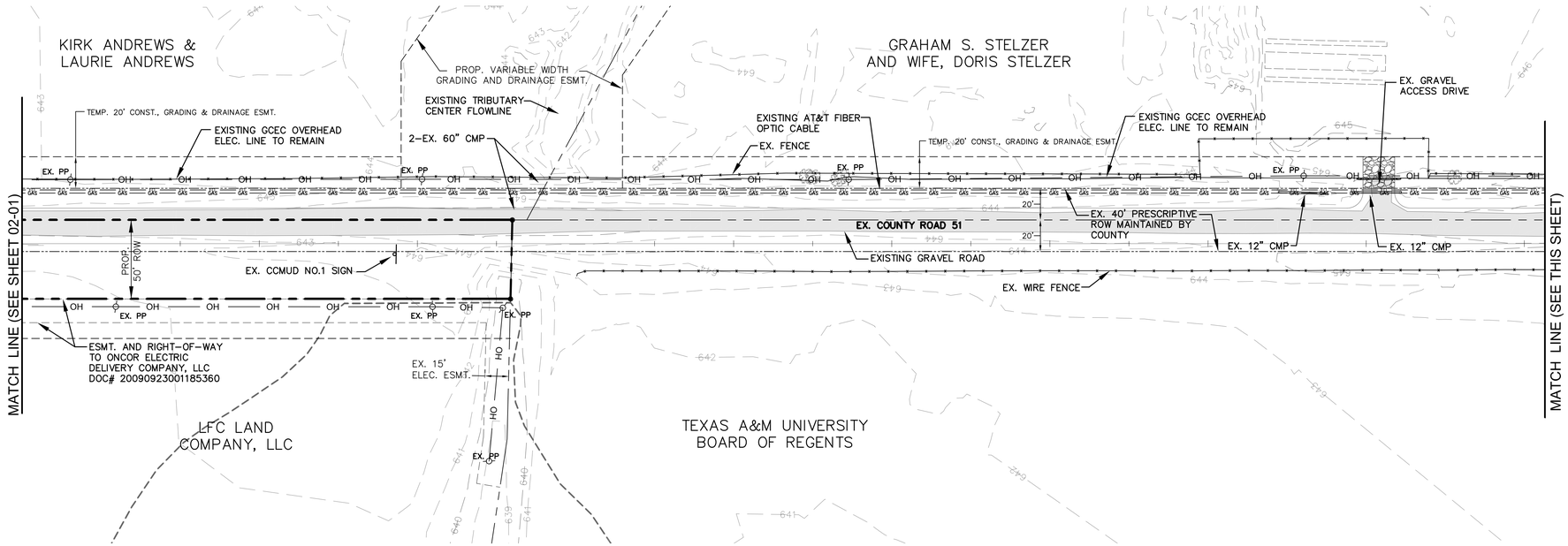

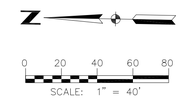

LEGEND

- EX. MINOR CONTOUR
- EX. MAJOR CONTOUR
- PROP. ROW
- EX. FENCE
- EX. OVERHEAD ELEC.
- EX. GAS
- EX. FIBER OPTIC
- EX. UNDERGROUND ELEC.
- EX. EASEMENT
- EX. BOUNDARY LINE
- PROP. TEMP. ACCESS ESMT.
- EX. PRESCRIPTIVE ROW
- EX. GAS MARKER
- EX. FIBER OPTIC MARKER
- EX. STREET SIGN & POLE
- EX. POWER POLE
- EX. TREE/BUSH

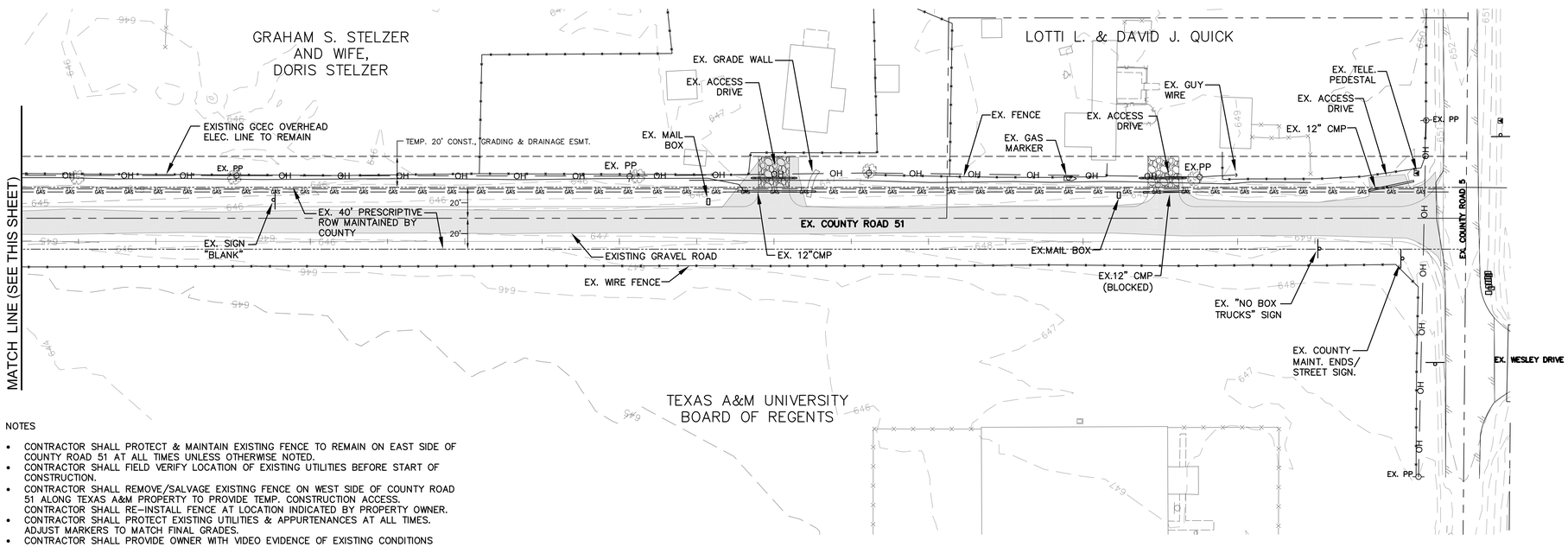

BASIS OF VERTICAL DATUM - NAVD 1988 based on National Geodetic Survey Benchmarks N-185 (Elevation 650.78') and H263 (Elevation - 643.81')

BENCHMARKS:

BM # 79 - Brass monument set on top of curb, southeast side of Light Farms Way, 520+- feet southwesterly from the centerline of Wildrye Ridge.
Elev. = 635.51'

BM # 80 - Brass monument set on curb inlet, southeast side of Light Farms Way, 79+- feet northeasterly from the centerline of Wildrye Ridge.
Elev. = 633.47'

STATE OF TEXAS
ROBERT M. STENGELE
50145
REGISTERED
PROFESSIONAL ENGINEER
11-5-14
Date: 11-05-2014

RECORD DRAWING

THIS RECORD DOCUMENT HAS BEEN PREPARED BASED IN PART UPON INFORMATION FURNISED BY OTHERS. THE DESIGN PROFESSIONAL CANNOT ASSURE THE ACCURACY OF OTHERS' INFORMATION AND THUS IS NOT RESPONSIBLE FOR THE ACCURACY OF THIS RECORD DOCUMENT OR FOR ANY ERROR OR OMISSION THAT MAY HAVE BEEN INCORPORATED INTO IT AS A RESULT. THOSE RELYING ON THIS RECORD DOCUMENT ARE ADVIDED TO OBTAIN INDEPENDENT VERIFICATION OF ITS ACCURACY BEFORE APPLYING IT FOR ANT PURPOSE.

NOTES

- CONTRACTOR SHALL PROTECT & MAINTAIN EXISTING FENCE TO REMAIN ON EAST SIDE OF COUNTY ROAD 51 AT ALL TIMES UNLESS OTHERWISE NOTED.
- CONTRACTOR SHALL FIELD VERIFY LOCATION OF EXISTING UTILITIES BEFORE START OF CONSTRUCTION.
- CONTRACTOR SHALL REMOVE/SALVAGE EXISTING FENCE ON WEST SIDE OF COUNTY ROAD 51 ALONG TEXAS A&M PROPERTY TO PROVIDE TEMP. CONSTRUCTION ACCESS. CONTRACTOR SHALL RE-INSTALL FENCE AT LOCATION INDICATED BY PROPERTY OWNER.
- CONTRACTOR SHALL PROTECT EXISTING UTILITIES & APPURTENANCES AT ALL TIMES. ADJUST MARKERS TO MATCH FINAL GRADES.
- CONTRACTOR SHALL PROVIDE OWNER WITH VIDEO EVIDENCE OF EXISTING CONDITIONS BEFORE BEGINNING CONSTRUCTION. (DIGITAL)

LIGHT FARMS

EXISTING CONDITIONS PLAN

PRAIRIE CROSSING

(EX. COUNTY ROAD 51)

COLLIN COUNTY MUNICIPAL UTILITY DISTRICT NO.1

LFC LAND COMPANY, LLC
8401 North Central Expressway, Suite 350, Dallas, Texas 75225
Phone (214) 292-3410 Fax (214) 292-3411

HUITT-ZOLLARS
Huitt-Zollars, Inc. Dallas
1717 McKinney Avenue, Suite 1400
Dallas, Texas 75202-1236
Phone (214) 871-3311 Fax (214) 871-0757

SCALE AS SHOWN	SHEET No.
DATE 7/30/2014	02-02

PROJECT NUMBER: 01-3905-30

DWG: I:\proj\01\3905\01\01390530 - CR51\DWG\RECORD DRAWINGS 11-7-14\02-01 EXISTING CONDITIONS PLAN.dwg USER: jcooper
DATE: Nov 05, 2014 3:06pm XREFS: GBS LF-MASTER-BASE BASE-CR51 CR 51 TOPO EX-CONTOURS BASE

CAD FILE PATH: I:\proj\01\3905\01\01390530 - cr51\dwg\record drawings 11-7-14\02-01 existing conditions plan.dwg

P-201312-01

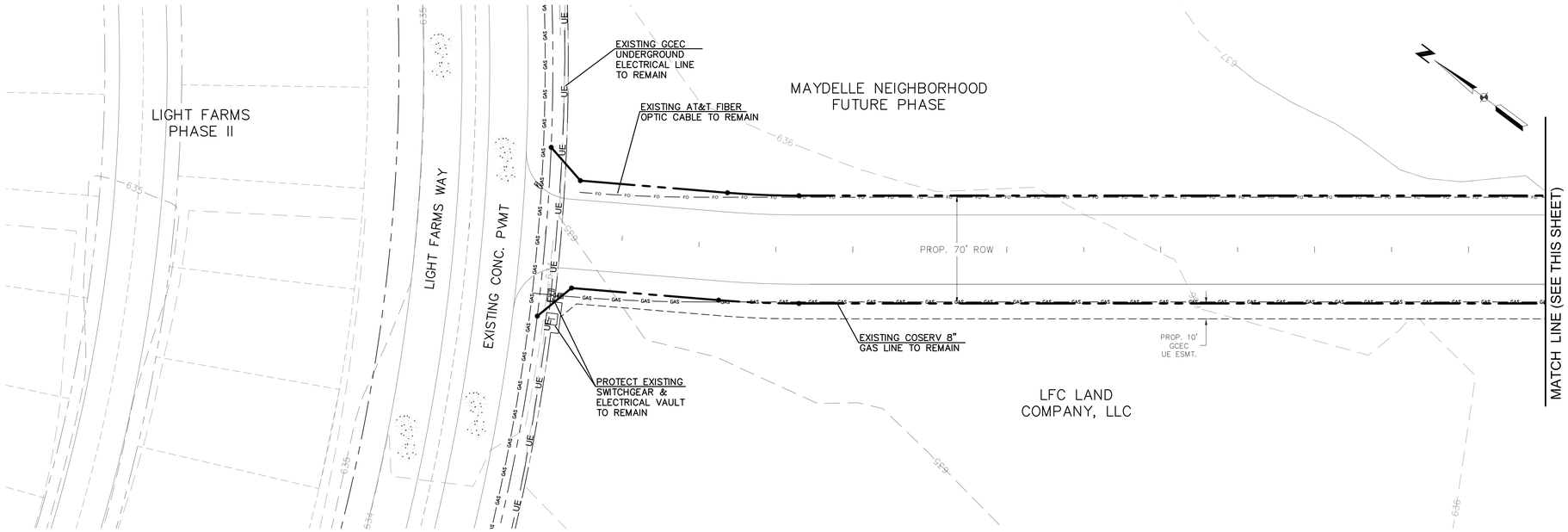

0 20 40 60 80
SCALE: 1" = 40'

LEGEND

- EX. MINOR CONTOUR
- EX. MAJOR CONTOUR
- PROP. ROW
- EX. FENCE
- EX. OVERHEAD ELEC.
- EX. GAS
- EX. FIBER OPTIC
- EX. UNDERGROUND ELEC.
- EX. EASEMENT
- EX. BOUNDARY LINE
- PROP. TEMP. ACCESS ESMT.
- EX. PRESCRIPTIVE ROW
- EX. GAS MARKER
- EX. FIBER OPTIC MARKER
- EX. STREET SIGN & POLE
- EX. POWER POLE
- EX. TREE/BUSH

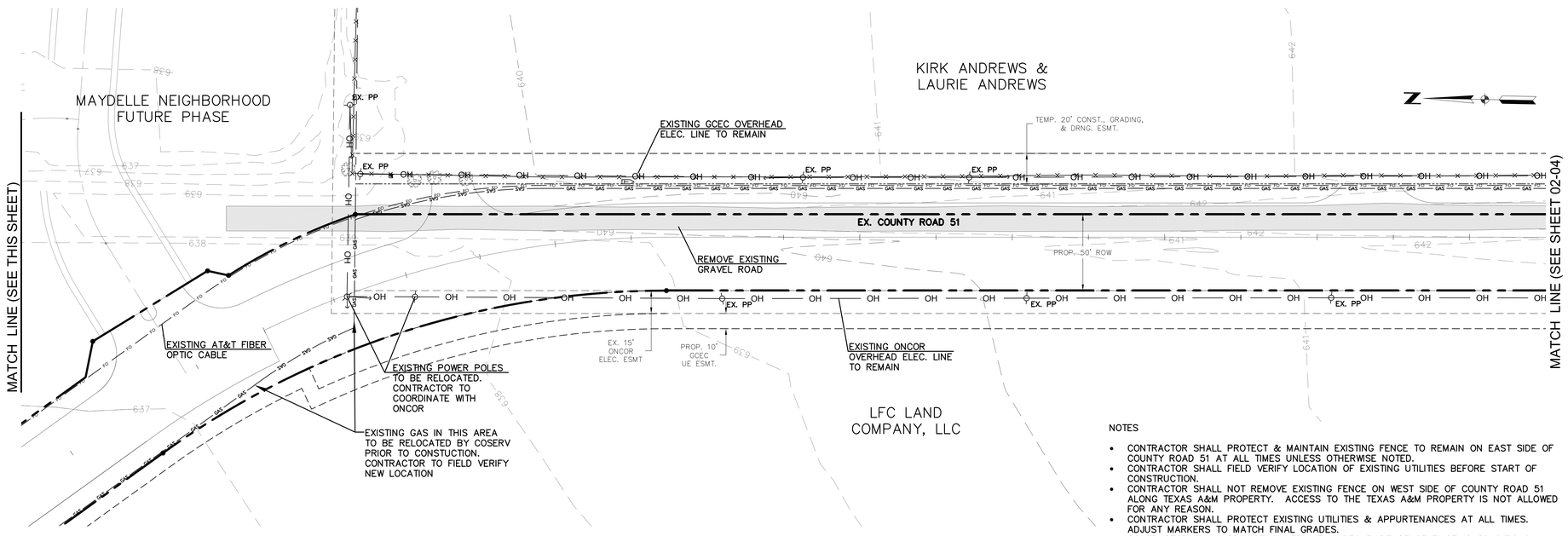

BASIS OF VERTICAL DATUM - NAVD 1988 based on National Geodetic Survey Benchmarks N-185 (Elevation 650.78') and H263 (Elevation - 643.81')

BENCHMARKS:

BM # 79 - Brass monument set on top of curb, southeast side of Light Farms Way, 520+- feet southwesterly from the centerline of Wildrye Ridge.
Elev. = 635.51'

BM # 80 - Brass monument set on curb inlet, southeast side of Light Farms Way, 79+- feet northeasterly from the centerline of Wildrye Ridge.
Elev. = 633.47'

STATE OF TEXAS
ROBERT M. STENGELE
50145
REGISTERED PROFESSIONAL ENGINEER
11-5-14
Date: 11-05-2014
Hulitt-Zollars, Inc.
Firm Registration No. F-761

RECORD DRAWING

THIS RECORD DOCUMENT HAS BEEN PREPARED BASED IN PART UPON INFORMATION FURNISED BY OTHERS. THE DESIGN PROFESSIONAL CANNOT ASSURE THE ACCURACY OF OTHERS' INFORMATION AND THUS IS NOT RESPONSIBLE FOR THE ACCURACY OF THIS RECORD DOCUMENT OR FOR ANY ERROR OR OMISSION THAT MAY HAVE BEEN INCORPORATED INTO IT AS A RESULT. THOSE RELYING ON THIS RECORD DOCUMENT ARE ADVIDED TO OBTAIN INDEPENDENT VERIFICATION OF ITS ACCURACY BEFORE APPLYING IT FOR ANT PURPOSE.

NOTES

- CONTRACTOR SHALL PROTECT & MAINTAIN EXISTING FENCE TO REMAIN ON EAST SIDE OF COUNTY ROAD 51 AT ALL TIMES UNLESS OTHERWISE NOTED.
- CONTRACTOR SHALL FIELD VERIFY LOCATION OF EXISTING UTILITIES BEFORE START OF CONSTRUCTION.
- CONTRACTOR SHALL NOT REMOVE EXISTING FENCE ON WEST SIDE OF COUNTY ROAD 51 ALONG TEXAS A&M PROPERTY. ACCESS TO THE TEXAS A&M PROPERTY IS NOT ALLOWED FOR ANY REASON.
- CONTRACTOR SHALL PROTECT EXISTING UTILITIES & APPURTENANCES AT ALL TIMES. ADJUST MARKERS TO MATCH FINAL GRADES.
- CONTRACTOR SHALL PROVIDE OWNER WITH VIDEO EVIDENCE OF EXISTING CONDITIONS BEFORE BEGINNING CONSTRUCTION. (DIGITAL)
- EXISTING GRAVEL ROAD MATERIAL CAN BE MIXED & USED AS FILL MATERIAL.

LIGHT FARMS

DEMO PLAN

PRAIRIE CROSSING
(EX. COUNTY ROAD 51)

COLLIN COUNTY MUNICIPAL UTILITY DISTRICT NO.1

LFC LAND COMPANY, LLC
8401 North Central Expressway, Suite 350, Dallas, Texas 75225
Phone (214) 292-3410 Fax (214) 292-3411

HULITT-ZOLLARS
Hulitt-Zollars, Inc. Dallas
1717 McKinney Avenue, Suite 1400
Dallas, Texas 75202-1236
Phone (214) 871-3311 Fax (214) 871-0757

SCALE	SHEET No.
AS SHOWN	02-03
DATE 7/30/2014	

PROJECT NUMBER: 01-3905-30

DWG: I:\proj\013905\01\01390530 - CR51\DWG\RECORD DRAWINGS 11-7-14\02-01 EXISTING CONDITIONS PLAN.dwg USER: jcooper
DATE: Nov 05, 2014 3:07pm XREFS: GBS LF-MASTER-BASE BASE-CR51 CR 51 TOPO EX-CONTOURS BASE

CAD FILE PATH: I:\proj\013905\01\01390530 - cr51\dwg\record drawings 11-7-14\02-01 existing conditions plan.dwg

P-201312-01

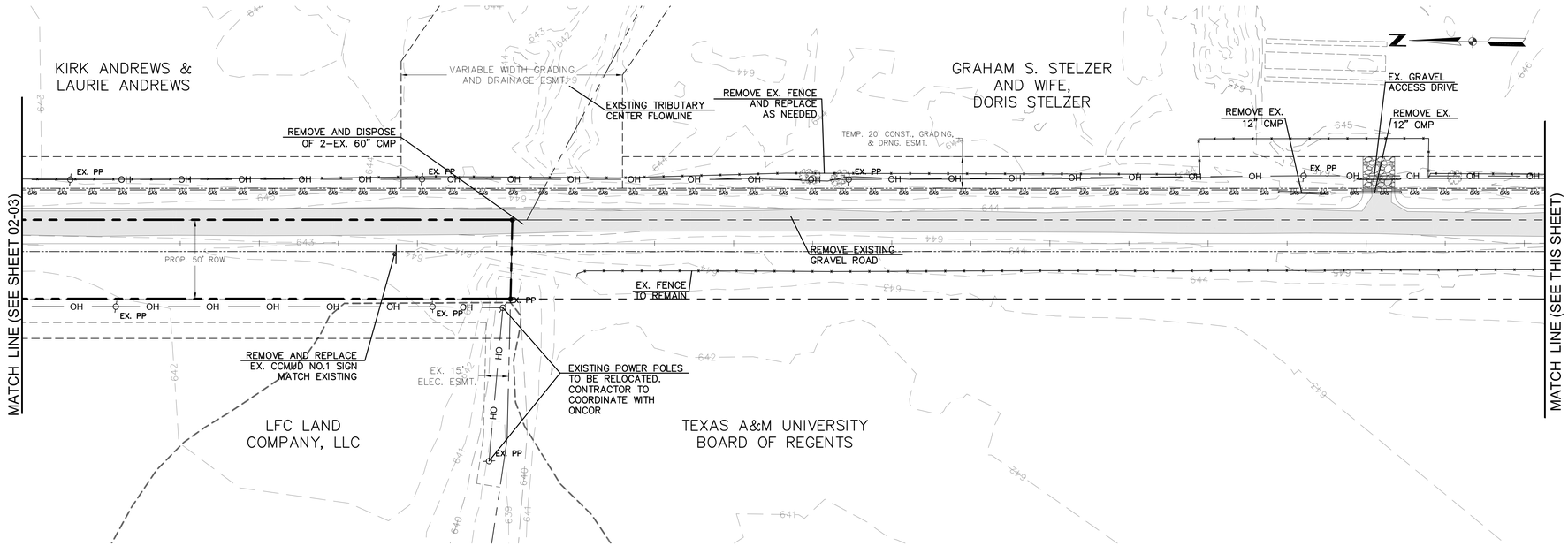

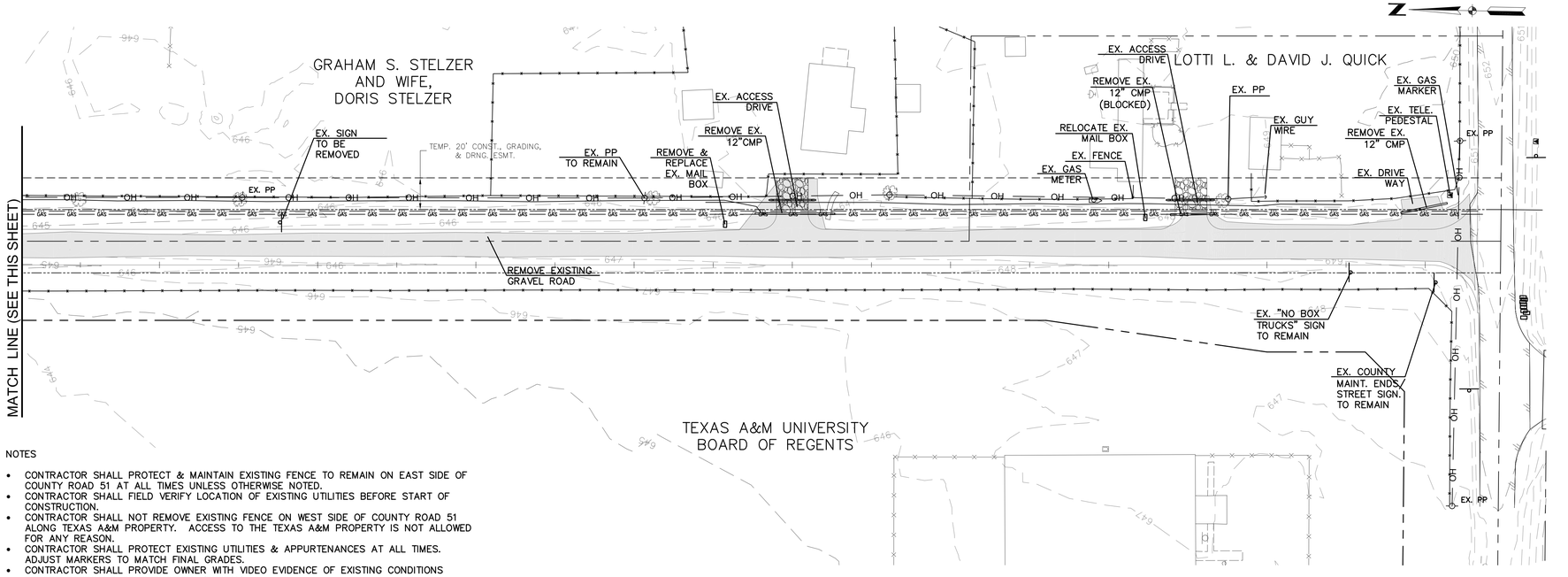

SCALE: 1" = 40'

LEGEND

- EX. MINOR CONTOUR
- EX. MAJOR CONTOUR
- PROP. ROW
- EX. FENCE
- EX. OVERHEAD ELEC.
- EX. GAS
- EX. FIBER OPTIC
- EX. UNDERGROUND ELEC.
- EX. EASEMENT
- EX. BOUNDARY LINE
- PROP. TEMP. ACCESS ESMT.
- EX. PRESCRIPTIVE ROW
- EX. GAS MARKER
- EX. FIBER OPTIC MARKER
- EX. STREET SIGN & POLE
- EX. POWER POLE
- EX. TREE/BUSH

BASIS OF VERTICAL DATUM - NAVD 1988 based on National Geodetic Survey Benchmarks N-185 (Elevation 650.78') and H263 (Elevation - 643.81')

BENCHMARKS:

BM # 79 - Brass monument set on top of curb, southeast side of Light Farms Way, 520+- feet southwesterly from the centerline of Wildrye Ridge.
Elev. = 635.51'

BM # 80 - Brass monument set on curb inlet, southeast side of Light Farms Way, 79+- feet northeasterly from the centerline of Wildrye Ridge.
Elev. = 633.47'

STATE OF TEXAS
ROBERT M. STENGELE
50145
REGISTERED
PROFESSIONAL ENGINEER
11-5-14
Date: 11-05-2014

RECORD DRAWING

THIS RECORD DOCUMENT HAS BEEN PREPARED BASED IN PART UPON INFORMATION FURNISED BY OTHERS. THE DESIGN PROFESSIONAL CANNOT ASSURE THE ACCURACY OF OTHERS' INFORMATION AND THUS IS NOT RESPONSIBLE FOR THE ACCURACY OF THIS RECORD DOCUMENT OR FOR ANY ERROR OR OMISSION THAT MAY HAVE BEEN INCORPORATED INTO IT AS A RESULT. THOSE RELYING ON THIS RECORD DOCUMENT ARE ADVIDED TO OBTAIN INDEPENDENT VERIFICATION OF ITS ACCURACY BEFORE APPLYING IT FOR ANT PURPOSE.

NOTES

- CONTRACTOR SHALL PROTECT & MAINTAIN EXISTING FENCE TO REMAIN ON EAST SIDE OF COUNTY ROAD 51 AT ALL TIMES UNLESS OTHERWISE NOTED.
- CONTRACTOR SHALL FIELD VERIFY LOCATION OF EXISTING UTILITIES BEFORE START OF CONSTRUCTION.
- CONTRACTOR SHALL NOT REMOVE EXISTING FENCE ON WEST SIDE OF COUNTY ROAD 51 ALONG TEXAS A&M PROPERTY. ACCESS TO THE TEXAS A&M PROPERTY IS NOT ALLOWED FOR ANY REASON.
- CONTRACTOR SHALL PROTECT EXISTING UTILITIES & APPURTENANCES AT ALL TIMES. ADJUST MARKERS TO MATCH FINAL GRADES.
- CONTRACTOR SHALL PROVIDE OWNER WITH VIDEO EVIDENCE OF EXISTING CONDITIONS BEFORE BEGINNING CONSTRUCTION. (DIGITAL)
- EXISTING GRAVEL ROAD MATERIAL CAN BE MIXED & USED AS FILL MATERIAL.

LIGHT FARMS

DEMO PLAN

PRAIRIE CROSSING
(EX. COUNTY ROAD 51)

COLLIN COUNTY MUNICIPAL UTILITY DISTRICT NO.1

LFC LAND COMPANY, LLC
8401 North Central Expressway, Suite 350, Dallas, Texas 75225
Phone (214) 292-3410 Fax (214) 292-3411

HUITT-ZOLLARS
Huitt-Zollars, Inc. Dallas
1717 McKinney Avenue, Suite 1400
Dallas, Texas 75202-1236
Phone (214) 871-3311 Fax (214) 871-0757

SCALE AS SHOWN	SHEET No.
DATE 7/30/2014	02-04

PROJECT NUMBER: 01-3905-30

DWG: I:\proj\01390501\01390530 - CR51\DWG\RECORD DRAWINGS 11-7-14\02-01 EXISTING CONDITIONS PLAN.dwg USER: jcooper
DATE: Nov 05, 2014 3:07pm XREFS: GBS LF-MASTER-BASE BASE-CR51 CR 51 TOPO EX-CONTOURS BASE

CAD FILE PATH: I:\proj\01390501\01390530 - cr51\dwg\record drawings 11-7-14\02-01 existing conditions plan.dwg

P-201312-01

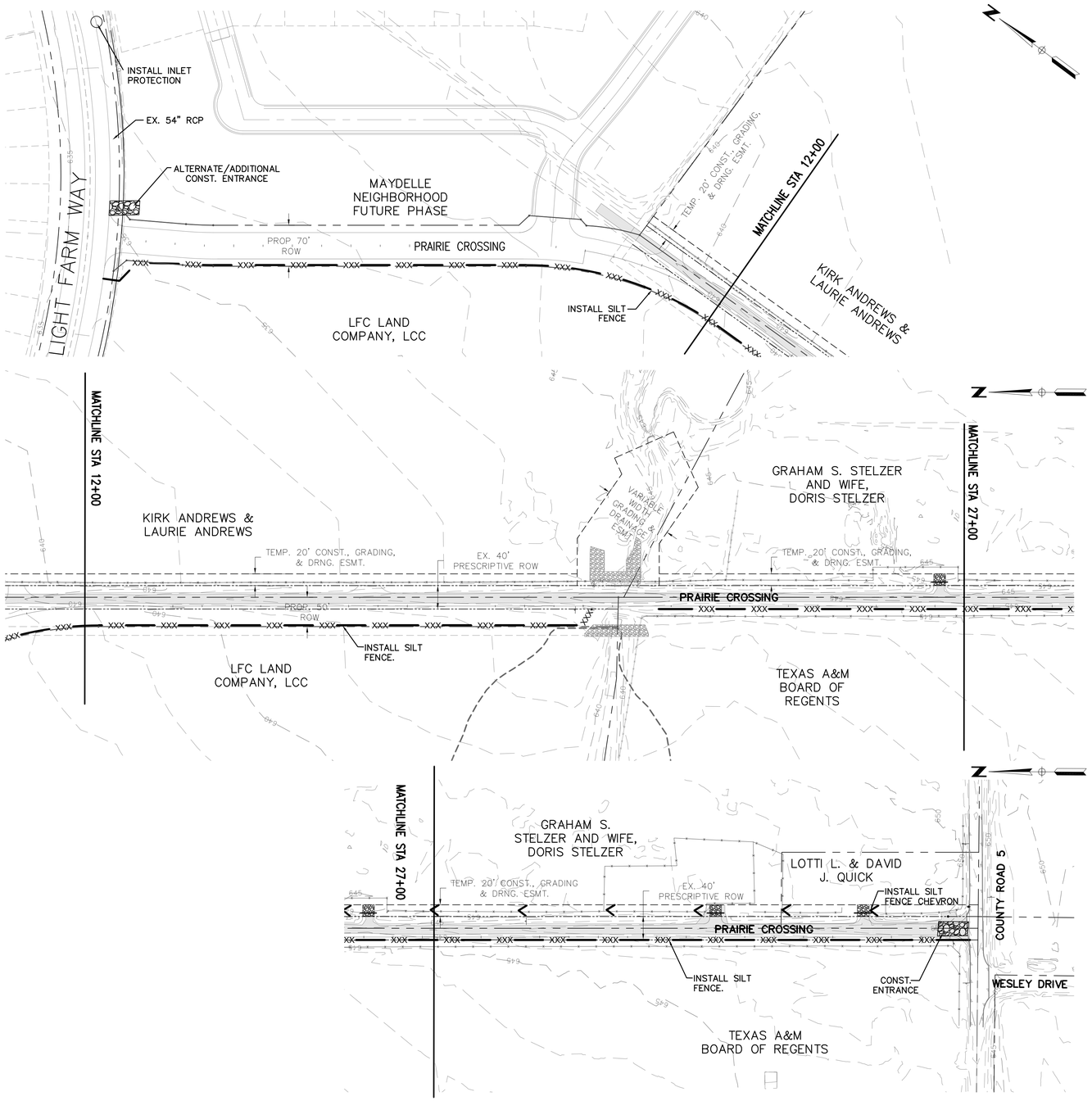

PHASES OF EROSION CONTROL

A. GRADING
   1. INSTALL SILT FENCE
   2. INSTALL CONSTRUCTION ENTRANCE
   3. INSTALL SEDIMENT BASIN
   4. INSTALL INLET PROTECTIONS ON EXISTING INLETS
B. UTILITIES
   1. MAINTAIN SILT FENCE. INSTALL SILT FENCE AROUND ALL SANITARY SEWER MANHOLES
   2. MAINTAIN CONSTRUCTION ENTRANCE
   3. MAINTAIN SEDIMENT BASIN
   4. INSTALL INLET PROTECTIONS ON NEW INLETS
C. PAVING
   1. MAINTAIN SILT FENCE
   2. REMOVE CONSTRUCTION ENTRANCE
   3. INSTALL CONCRETE WASHOUT AREA
   4. INSTALL EROSION CONTROL BLANKET ALONG BACK OF CURB
   5. INSTALL SILT FENCE CHEVRONS AT SWALES

NOTE:
CONTRACTOR REQUIRED TO REPAIR AND/OR REPLACE EXISTING EROSION CONTROL DEVICES CAUSED BY HIS ACTIVITY.

CONTRACTOR SHALL PREPARE THE STORM WATER POLLUTION PREVENTION PLAN (SWPPP) AND FILE A NOTICE OF INTENET (NOI) WITH THE TEXAS COMMISSION ON ENVIRONMENTAL QUALITY (TCEQ) PRIOR TO CONSTRUCTION. A COPY OF THE NOI SHALL BE PROVIDED TO THE CITY OF CELINA AND THE COLLIN COUNTY MUD NO. 1.

0 50 100 150 200
SCALE: 1" = 100'

NOTE:
REFER TO SHEET 03–03 FOR ALL EROSION CONTROL DETAILS.

LEGEND

—XXX—	SILT FENCE
	CONCRETE WASHOUT AREA
	INLET PROTECTION
	PROPOSED OFFSITE FLOW
	PROPOSED ONSITE FLOW
	SILT FENCE CHEVERONS
	EROSION CONTROL BLANKET
	CONST ENTRY/EXIT

TOTAL DISTURBED AREA = 7.0 AC.

BASIS OF VERTICAL DATUM - NAVD 1988 based on National Geodetic Survey Benchmarks N-185 (Elevation 650.78') and H263 (Elevation - 643.81')

BENCHMARKS:

BM # 79 - Brass monument set on top of curb, southeast side of Light Farms Way, 520+- feet southwesterly from the centerline of Wildrye Ridge.
Elev. = 635.51'

BM # 80 - Brass monument set on curb inlet, southeast side of Light Farms Way, 79+- feet northeasterly from the centerline of Wildrye Ridge.
Elev. = 633.47'

STATE OF TEXAS
ROBERT M. STENGELE
50145
REGISTERED
PROFESSIONAL ENGINEER
11-5-14
Date: 11-05-2014

Hulitt-Zollars, Inc.
Firm Registration No. F-761

RECORD DRAWING

THIS RECORD DOCUMENT HAS BEEN PREPARED BASED IN PART UPON INFORMATION FURNISED BY OTHERS. THE DESIGN PROFESSIONAL CANNOT ASSURE THE ACCURACY OF OTHERS' INFORMATION AND THUS IS NOT RESPONSIBLE FOR THE ACCURACY OF THIS RECORD DOCUMENT OR FOR ANY ERROR OR OMISSION THAT MAY HAVE BEEN INCORPORATED INTO IT AS A RESULT. THOSE RELYING ON THIS RECORD DOCUMENT ARE ADVIDED TO OBTAIN INDEPENDENT VERIFICATION OF ITS ACCURACY BEFORE APPLYING IT FOR ANT PURPOSE.

LIGHT FARMS

EROSION CONTROL PLAN
PRE-CONSTRUCTION

PRAIRIE CROSSING
(EX. COUNTY ROAD 51)

COLLIN COUNTY MUNICIPAL UTILITY DISTRICT NO.1

LFC LAND COMPANY, LLC
8401 North Central Expressway, Suite 350, Dallas, Texas 75225
Phone (214) 292-3410 Fax (214) 292-3411

HULITT-ZOLLARS
Hulitt-Zollars, Inc. Dallas
1717 McKinney Avenue, Suite 1400
Dallas, Texas 75202-1236
Phone (214) 871-3311 Fax (214) 871-0757

SCALE	SHEET No.
1" = 100'	03-01
DATE 7/30/2014	

PROJECT NUMBER: 01-3905-30

DWG: I:\proj\01\3905\01\01390530 - CR51\DWG\RECORD DRAWINGS 11-7-14\03-01 EROSION CONTROL PLAN.dwg USER: jcooper
DATE: Nov 05, 2014 3:09pm XREFS: GBS LF-MASTER-BASE BASE-CR51 CR 51 TOPO EX-CONTOURS

CAD FILE PATH: I:\proj\01\3905\01\01390530 - cr51\dwg\record drawings 11-7-14\03-01 erosion control plan.dwg

P-201312-01

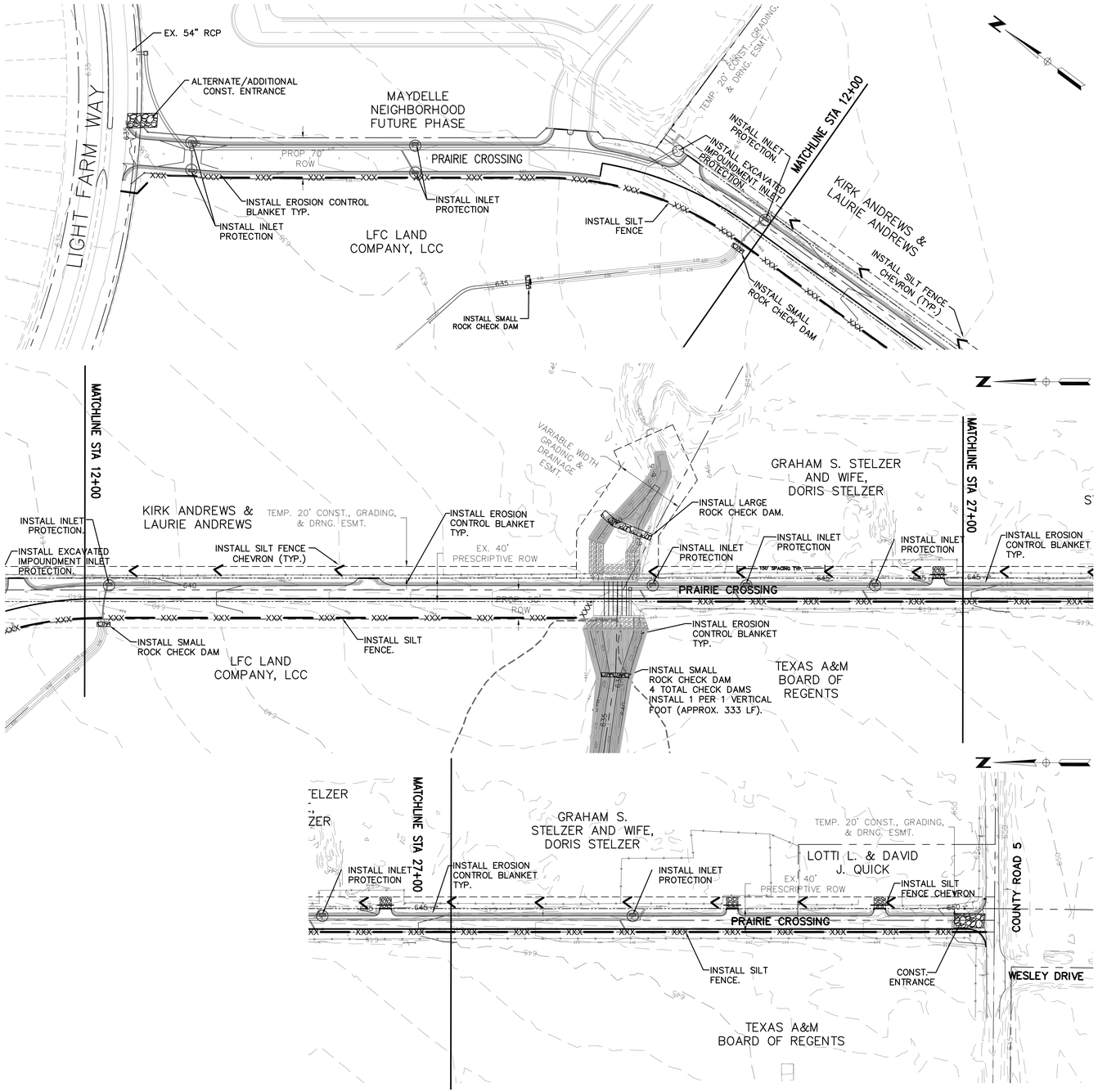

PHASES OF EROSION CONTROL

A. GRADING
   1. INSTALL SILT FENCE
   2. INSTALL CONSTRUCTION ENTRANCE
   3. INSTALL SEDIMENT BASIN
   4. INSTALL INLET PROTECTIONS ON EXISTING INLETS
B. UTILITIES
   1. MAINTAIN SILT FENCE. INSTALL SILT FENCE AROUND ALL SANITARY SEWER MANHOLES
   2. MAINTAIN CONSTRUCTION ENTRANCE
   3. MAINTAIN SEDIMENT BASIN
   4. INSTALL INLET PROTECTIONS ON NEW INLETS
C. PAVING
   1. MAINTAIN SILT FENCE
   2. REMOVE CONSTRUCTION ENTRANCE
   3. INSTALL CONCRETE WASHOUT AREA
   4. INSTALL EROSION CONTROL BLANKET ALONG BACK OF CURB
   5. INSTALL SILT FENCE CHEVRONS AT SWALES

NOTE:
CONTRACTOR REQUIRED TO REPAIR AND/OR REPLACE EXISTING EROSION CONTROL DEVICES CAUSED BY HIS ACTIVITY.

CONTRACTOR SHALL PREPARE THE STORM WATER POLLUTION PREVENTION PLAN (SWPPP) AND FILE A NOTICE OF INTENET (NOI) WITH THE TEXAS COMMISSION ON ENVIRONMENTAL QUALITY (TCEQ) PRIOR TO CONSTRUCTION. A COPY OF THE NOI SHALL BE PROVIDED TO THE CITY OF CELINA AND THE COLLIN COUNTY MUD NO. 1.

0 50 100 150 200
SCALE: 1" = 100'

NOTE:
REFER TO SHEET 03–03 FOR ALL EROSION CONTROL DETAILS.

LEGEND

XXX	SILT FENCE
	CONCRETE WASHOUT AREA
	INLET PROTECTION
	PROPOSED OFFSITE FLOW
	PROPOSED ONSITE FLOW
	SILT FENCE CHEVERONS
	EROSION CONTROL BLANKET
	CONST ENTRY/EXIT

TOTAL DISTURBED AREA = 7.0 AC.

BASIS OF VERTICAL DATUM - NAVD 1988 based on National Geodetic Survey Benchmarks N-185 (Elevation 650.78') and H263 (Elevation - 643.81')

BENCHMARKS:

BM # 79 - Brass monument set on top of curb, southeast side of Light Farms Way, 520+- feet southwesterly from the centerline of Wildrye Ridge.
Elev. = 635.51'

BM # 80 - Brass monument set on curb inlet, southeast side of Light Farms Way, 79+- feet northeasterly from the centerline of Wildrye Ridge..
Elev. = 633.47'

STATE OF TEXAS
ROBERT M. STENGELE
50145
REGISTERED
PROFESSIONAL ENGINEER
11-5-14
Date: 11-05-2014
Hulitt-Zollars, Inc.
Firm Registration No. F-761

RECORD DRAWING

THIS RECORD DOCUMENT HAS BEEN PREPARED BASED IN PART UPON INFORMATION FURNISED BY OTHERS. THE DESIGN PROFESSIONAL CANNOT ASSURE THE ACCURACY OF OTHERS' INFORMATION AND THUS IS NOT RESPONSIBLE FOR THE ACCURACY OF THIS RECORD DOCUMENT OR FOR ANY ERROR OR OMISSION THAT MAY HAVE BEEN INCORPORATED INTO IT AS A RESULT. THOSE RELYING ON THIS RECORD DOCUMENT ARE ADVIDED TO OBTAIN INDEPENDENT VERIFICATION OF ITS ACCURACY BEFORE APPLYING IT FOR ANT PURPOSE.

LIGHT FARMS

EROSION CONTROL PLAN
POST-CONSTRUCTION

PRAIRIE CROSSING
(EX. COUNTY ROAD 51)

COLLIN COUNTY MUNICIPAL UTILITY DISTRICT NO.1

LFC LAND COMPANY, LLC
8401 North Central Expressway, Suite 350, Dallas, Texas 75225
Phone (214) 292-3410 Fax (214) 292-3411

HULITT-ZOLLARS
Hulitt-Zollars, Inc. Dallas
1717 McKinney Avenue, Suite 1400
Dallas, Texas 75202-1236
Phone (214) 871-3311 Fax (214) 871-0757

SCALE	SHEET No.
1" = 100'	03-02
DATE 7/30/2014	

PROJECT NUMBER: 01-3905-30

DWG: I:\proj\013905\01\390530 - CR51\DWG\RECORD DRAWINGS 11-7-14\03-01 EROSION CONTROL PLAN.dwg USER: jcooper
DATE: Nov 06, 2014 3:10pm XREFS: GBS LF-MASTER-BASE BASE-CR51 CR 51 TOPO EX-CONTOURS

CAD FILE PATH: I:\proj\013905\01\390530 - cr51\dwg\record drawings 11-7-14\03-01 erosion control plan.dwg

P-201312-01

EROSION CONTROL GENERAL NOTES

1. DISTURBED AREAS WHERE CONSTRUCTION HAS PERMANENTLY OR TEMPORARILY CEASED MUST BE STABILIZED WITHIN 14 DAYS OF THE LAST DISTURBANCE, AREA WHICH WILL BE RE-DISTURBED WITHIN 21 DAYS NEED NOT BE STABILIZED.
2. EROSION CONTROL MEASURES WILL BE ACTIVELY MAINTAINED UNTIL FINAL STABILIZATION OF THE DISTURBED AREA. IF EROSION CONTROL MEASURES ARE REMOVED FOR CONSTRUCTION OR ACCESS PURPOSES, CONTRACTOR SHALL REPLACE ALL ITEMS AT THE END OF EACH WORK DAY.
3. AFTER INSTALLATION OF PAVEMENT, FINAL GRADING AND GENERAL CLEANUP, ALL DISTURBED AREAS SHALL BE HYDROMULCHED OR CULTIPACK SEEDED. SEE SEEDING SPECIFICATIONS THIS SHEET.
4. EROSION CONTROL MEASURES REQUIRE MAINTENANCE, CLEANING AND REPLACEMENT AS REQUIRED. EROSION CONTROL MEASURES WILL BE INSPECTED AT LEAST ONCE EVERY SEVEN DAYS AND WITHIN 24 HOURS OF A RAIN FALL ONE-HALF INCH OR GREATER BY AN AGENT DESIGNATED BY THE OPERATOR AND A WRITTEN REPORT SHALL BE MAINTAINED.
5. EXCAVATED TRENCHES AND UTILITY SPOILS SHALL BE BACKFILLED OR STOCKPILED AT THE END OF EACH DAY.
6. STOCKPILED MATERIALS SHALL BE SURROUNDED BY SILT BARRIER FENCE OR HAY BALES PER THE DETAILS. ALTERNATE: SMALL STOCKPILED AREAS MAY BE COVERED WITH WATER REPELLANT TARP OR PLASTIC AS APPROVED BY THE OPERATOR.
7. SOILS IN PARKWAYS TO BE CHAIN HARROWED OR CHAIN DRAGGED PRIOR TO SEEDING. AFTER SEEDING, PARKWAYS TO BE MAINTAINED UNTIL A STAND OF GRASS HAS BEEN ACCOMPLISHED AND APPROVED BY THE CITY.

INSTALLATION SEQUENCE

PHASE 1 - INITIAL INSTALLATION OF SILT FENCE SHALL BE INSTALLED PRIOR TO CLEARING THE SITE FOR ESTABLISHING ROUGH GRADES. INSTALLATION OF SILT FENCE AND STONE OVERFLOW STRUCTURES SHALL BE PRESERVED BY THE EXCAVATION CONTRACTOR. IF DURING THE COURSE OF CLEARING AND EXCAVATION, THE EXCAVATION CONTRACTOR DESTROYS OF MOVES THESE FACILITIES, THEN IT SHALL BE THE RESPONSIBILITY OF THE EXCAVATION CONTRACTOR TO REPLACE THE FACILITIES TO THE STAT IN WHICH HE FOUND THEM WHEN HE MOBILIZED.
PHASE 2 - IF REQUIRED,INSTALLATION OF SILT FENCE OR STONE OVERFLOW STRUCTURES, AS SHOWN, SHALL BE INSTALLED PRIOR TO THE CONSTRUCTION OF ANY DRAINAGE FACILITIES AND AFTER INLET BOTTOMS ARE POURED. IT SHALL THE BE UTILITY CONTRACTOR'S RESPONSIBILITY TO PRESERVE AND/OR REPLACE ANY FACILITIES PREVIOUSLY INSTALLED DURING PHASE 1 IF DESTROYED.
PHASE 3 - CURLEX SHALL BE INSTALLED AFTER THE PAVING CONTRACTOR HAS BACKFILLED ALL STREET CURBS. THE PAVING CONTRACTOR SHALL BE RESPONSIBLE FOR PRESERVING AND/OR REPLACING ANY PREVIOUSLY INSTALLED FACILITIES WHICH ARE DESTROYED AS A RESULT OF CONSTRUCTING ANY AND ALL PAVING FACILITIES.
PHASE 4 - ALL DISTURBED ARES SHALL BE SEEDED AFTER THE EXCAVATION CONTRACTOR HAS COMPLETED THE FINAL GRADING WITHIN THE DEVELOPMENT.

NOTE: ALL PROPOSED STORMWATER POLLUTION PREVENTION DEVICES SHALL BE INSTALLED BY A QUALIFIED CONTRACTOR AND SHALL BE PAID FOR PER A UNIT PRICE CONTRACT.

SEEDING SPECIFICATIONS

CULTIPACK SEEDING SPECIFICATIONS

• WINTER RYE SEED (FALL AND WINTER)	65 LB/ACRE
• COMMON BERMUDA SEED (SPRING AND SUMMER)	65 LB/ACRE
• 17/17/17 FERTILIZER	380 LB/ACRE

HYDROMULCH SEEDING SPECIFICATIONS

• WINTER RYE SEED (FALL AND WINTER)	65 LB/ACRE
• COMMON BERMUDA SEED (SPRING AND SUMMER)	65 LB/ACRE
• 17/17/17 FERTILIZER	380 LB/ACRE
• WOOD CELLULOSE MULCH FIBER	2000 LB/ACRE

NOTE: SOIL TO BE SEEDED SHALL BE CHAIN HARROWED OR CHAIN DRAGGED PRIOR TO SEEDING. AFTER SEEDING, PARKWAYS TO BE MAINTAINED UNTIL A STAND OF GRASS HAS BEEN ACCOMPLISHED AND APPROVED BY THE OPERATOR

OTHER NOTES

1. SOLID NON-HAZARDOUS CONSTRUCTION WASTE SHALL BE DISPOSED OF IN A TRASH DUMPSTER OR APPROVED EQUAL IN A LOCATION APPROVED BY THE OPERATOR. POTENTIALLY SOLUBLE OR LEACHABLE SOLID WASTE SHALL BE STORED OFF THE GROUND AND IN COVERED LEAK-PROOF CONTAINERS. SOLID WASTE SHALL BE PROPERLY DISPOSED OF OFF-SITE ON A REGULAR BASIS.
2. HAZARDOUS WASTE SHALL BE SEGREGATED FROM NON-HAZARDOUS CONSTRUCTION SITE DEBRIS. LIQUID OF SEMI-LIQUID HAZARDOUS WASTE SHALL BE STORED IN APPROPRIATE CONTAINERS AND SHALL BE KEPT UNDER COVER. GRANULAR, SOLUBLE OR LEACHABLE HAZARDOUS WASTE MATERIALS SHALL BE STORED OFF THE GROUND AND IN COVERED LEAK-PROOF CONTAINERS. HAZARDOUS WASTE STORAGE AREA LOCATIONS SHALL BE PROPERLY APPROVED BY THE OPERATOR. HAZARDOUS WASTE SHALL BE PROPERLY DISPOSED OF OFF-SITE ON A REGULAR BASIS BY A REPUTABLE, LICENSED HAZARDOUS WASTE HAULER.
3. FRESH CONCRETE WASTE OR CONCRETE EQUIPMENT WASHDOWNS SHALL BE CONTAINED IN AN AREA APPROVED BY THE OPERATOR. CONTRACTOR SHALL ENSURE THAT AN ADEQUATE VEGETATIVE BUFFER IS PRESENT AROUND CONCRETE WASHOUT AREAS.
4. ALL WASTE MATERIALS SHALL BE STORED AWAY FROM DRAINAGE DITCHES, SWALES AND DRAINAGE STRUCTURES. WHERE APPROPRIATE, CONTAINMENT BERMS SHALL BE PLACED AROUND WASTE STORAGE AREAS.
5. CONTRACTOR SHALL TAKE APPROPRIATE MEASURES TO CONTROL DUST GENERATED DURING CONSTRUCTION ACTIVITIES.
6. CONTRACTOR SHALL CONSTRUCT APPROPRIATE ENTRYWAYS TO PROHIBIT THE TRACKING OF DIRT AND DEBRIS OFF-SITE.
7. A CENTRALLY LOCATED PORT-A-JOHN SHALL BE PLACED AND MAINTAINED ON A PROJECT SITE AT ALL TIMES DURING CONSTRUCTION.
8. EQUIPMENT MAINTENANCE, REPAIR, AND WASHDOWNS SHALL BE PERFORMED OFF-SITE OR IN LOCATIONS APPROVED BY THE OPERATOR.
9. A COPY OF THE SWPPP SHALL BE KEPT ON-SITE FOR THE ENTIRE CONSTRUCTION PERIOD. THE NOI ASSOCIATED WITH THIS SWPPP SHALL BE PROPERLY DISPLAYED ON-SITE FOR THE ENTIRE CONSTRUCTION PERIOD.
10. A NOTICE OF TERMINATION (NOT) SHALL BE FILED FOR THE PROJECT UPON CITY ACCEPTANCE OF THE PROJECT AND AFTER FINAL STABILIZATION HAS BEEN ACHIEVED AND THE RESPONSIBILITY FOR CONTINUED STORM WATER MANAGEMENT/EROSION CONTROL SHALL BECOME THAT OF THE BUILDER, CITY, OR OTHER APPROPRIATE ENTITY.
11. COMPLETE INSPECTION RECORDS PERTAINING TO THIS NOI AND SWPPP MUST BE MAINTAINED BY THE OPERATOR FOR A PERIOD OF THREE YEARS FOLLOWING FINAL STABILIZATION.

BMP MAINTENANCE SCHEDULE

BMP	MAINTENANCE FREQ.	BY:
TEMP STONE CONST. ENTRANCE	WEEKLY AND AFTER RAIN STORM EVENTS	OPERATOR
ROCK CHECK DAMS	WEEKLY AND AFTER RAIN STORM EVENTS	OPERATOR
SILT FENCE	WEEKLY AND AFTER RAIN STORM EVENTS	OPERATOR
INLET PROTECTION	WEEKLY AND AFTER RAIN STORM EVENTS	OPERATOR

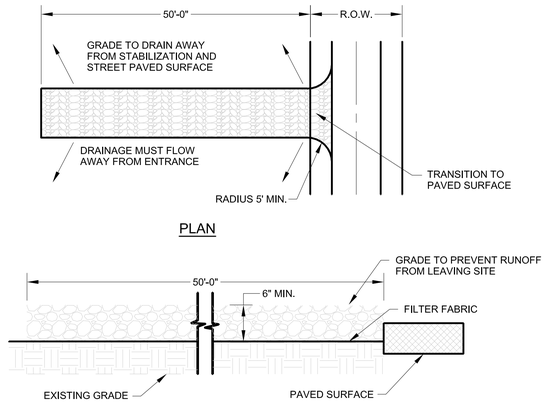

STABILIZED CONSTRUCTION ENTRANCE / EXIT

NCTCOG 02270.G
STORM WATER QUALITY
BEST MANAGEMENT PRACTICES
FOR CONSTRUCTION ACTIVITIES

DETAIL 'A'
N.T.S.

The Stabilized Construction Entrance / Exit Is To Be Used As A Vehicle Wash Down Area For Debris And Soil Removal Before Exiting The Site Onto The Existing Roadway. Location For Installation Should Be Identified On The Project's Erosion Control Plan. An Alternate Location Must Be Approved By Owner Or Engineer Prior To Installation. Stabilized Construction Entrance / Exit Shall Be Top Dressed With Additional Stone As Necessary.

SILT FENCE GENERAL NOTES:

1. STEEL POSTS WHICH SUPPORT THE SILT FENCE SHALL BE INSTALLED ON A SLIGHT ANGLE TOWARD THE ANTICIPATED RUNOFF SOURCE. POST MUST BE EMBEDDED A MINIMUM OF ONE FOOT.

2. THE TOE OF THE SILT FENCE SHALL BE TRENCHED IN WITH A SPADE OR MECHANICAL TRENCHER, SO THAT THE DOWNSLOPE FACE OF THE TRENCH IS FLAT AND PERPENDICULAR TO THE LINE OF FLOW. WHERE FENCE CANNOT BE TRENCHED IN (e.g. PAVEMENT), WEIGHT FABRIC FLAP WITH ROCK ON UPHILL SIDE TO PREVENT FLOW FROM SEEPING UNDER FENCE.

3. THE TRENCH MUST BE A MINIMUM OF 6 INCHES DEEP AND 6 INCHES WIDE TO ALLOW FOR THE SILT FENCE FABRIC TO BE LAID IN THE GROUND AND BACKFILLED WITH COMPACTED MATERIAL.

4.SILT FENCE SHOULD BE SECURELY FASTENED TO EACH STEEL SUPPORT POST OR TO WOVEN WIRE, WHICH IS IN TURN ATTACHED TO THE STEEL FENCE POST.

5. THERE SHALL BE A 3 FOOT OVERLAP, SECURELY FASTENED WHERE ENDS OF FABRIC MEET.

6. INSPECTION SHALL BE MADE WEEKLY AND AFTER EACH RAINFALL. REPAIR OR REPLACEMENT SHALL BE MADE PROMPTLY AS NEEDED.

7. SILT FENCE SHALL BE REMOVED WHEN THE SITE IS COMPLETELY. STABILIZED SO AS NOT TO BLOCK OR IMPEDE STORM FLOW OR DRAINAGE.

8. ACCUMULATED SILT SHALL BE REMOVED WHEN IT REACHES A DEPTH OF HALF THE HEIGHT OF THE FENCE. THE SILT SHALL BE DISPOSED OF AT AN APPROVED SITE AND IN SUCH A MANNER AS TO NOT CONTRIBUTE TO TO ADDITIONAL SILTATION.

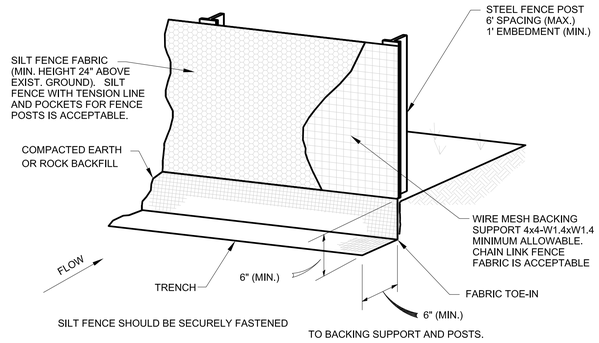

SILT FENCE

NCTCOG 02270.B
STORM WATER QUALITY
BEST MANAGEMENT PRACTICES
FOR CONSTRUCTION ACTIVITIES

DETAIL 'B'
N.T.S.

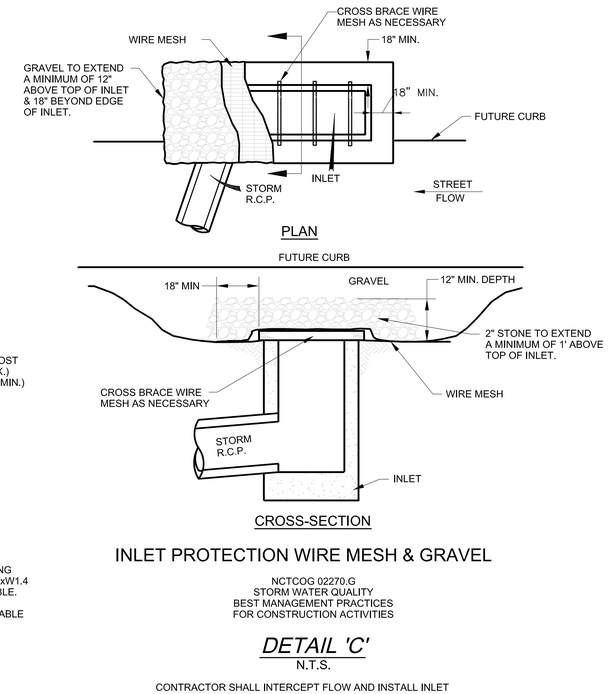

INLET PROTECTION WIRE MESH & GRAVEL

NCTCOG 02270.G
STORM WATER QUALITY
BEST MANAGEMENT PRACTICES
FOR CONSTRUCTION ACTIVITIES

DETAIL 'C'
N.T.S.

CONTRACTOR SHALL INTERCEPT FLOW AND INSTALL INLET PROTECTION MEASURES AS SOON AS PRACTICABLE.

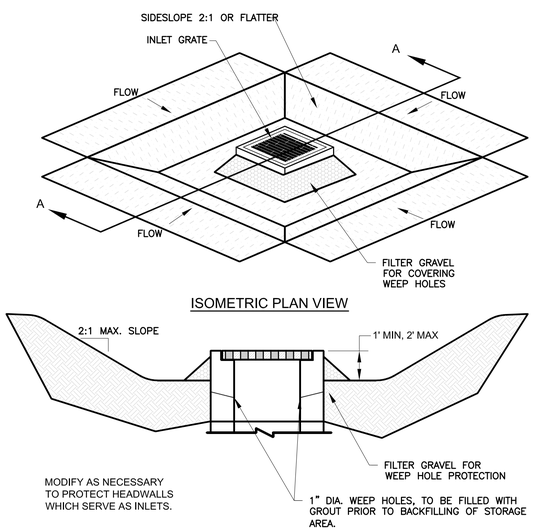

EXCAVATED IMPOUNDMENT INLET PROTECTION

DETAIL 'D'
N.T.S.

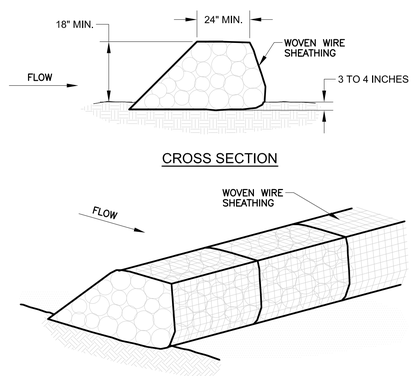

SMALL ROCK CHECK DAM

DETAIL 'E'
N.T.S.

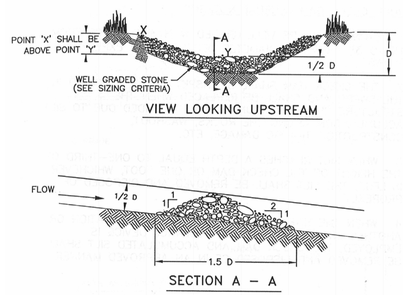

LARGE ROCK CHECK DAM

DETAIL 'F'
N.T.S.

METHODOLOGY APPLIES TO RECESSED AND STANDARD CURB INLETS. CARE SHOULD BE TAKEN TO KEEP MEASURE OUT OF TRAFFIC.

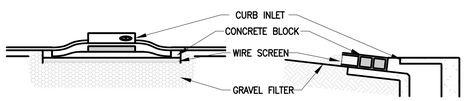

CURB INLET PROTECTION

DETAIL 'G'
N.T.S.

BASIS OF VERTICAL DATUM - NAVD 1988 based on National Geodetic Survey Benchmarks N-185 (Elevation 650.78') and H263 (Elevation - 643.81')

BENCHMARKS:

BM # 79 - Brass monument set on top of curb, southeast side of Light Farms Way, 520+- feet southwesterly from the centerline of Wildrye Ridge.
Elev. = 635.51'

BM # 80 - Brass monument set on curb inlet, southeast side of Light Farms Way, 79+- feet northeasterly from the centerline of Wildrye Ridge.
Elev. = 633.47'

STATE OF TEXAS
ROBERT M. STENGELE
50145
REGISTERED PROFESSIONAL ENGINEER
11-5-14
Date: 11-05-2014
Hulitt-Zollars, Inc.
Firm Registration No. F-761

RECORD DRAWING

THIS RECORD DOCUMENT HAS BEEN PREPARED BASED IN PART UPON INFORMATION FURNISED BY OTHERS. THE DESIGN PROFESSIONAL CANNOT ASSURE THE ACCURACY OF OTHERS' INFORMATION AND THUS IS NOT RESPONSIBLE FOR THE ACCURACY OF THIS RECORD DOCUMENT OR FOR ANY ERROR OR OMISSION THAT MAY HAVE BEEN INCORPORATED INTO IT AS A RESULT. THOSE RELYING ON THIS RECORD DOCUMENT ARE ADVIDED TO OBTAIN INDEPENDENT VERIFICATION OF ITS ACCURACY BEFORE APPLYING IT FOR ANT PURPOSE.

LIGHT FARMS

EROSION CONTROL DETAILS

PRAIRIE CROSSING
(EX. COUNTY ROAD 51)
COLLIN COUNTY MUNICIPAL UTILITY DISTRICT NO.1

LFC LAND COMPANY, LLC
8401 North Central Expressway, Suite 350, Dallas, Texas 75225
Phone (214) 292-3410 Fax (214) 292-3411

HULITT-ZOLLARS
Hulitt-Zollars, Inc. Dallas
1717 McKinney Avenue, Suite 1400
Dallas, Texas 75202-1236
Phone (214) 871-3311 Fax (214) 871-0757

SCALE	SHEET No.
DATE 7/30/2014	03-03

PROJECT NUMBER: 01-3905-30

DWG: I:\proj\01\3905\01\1390530 - CR51\DWG\RECORD DRAWINGS 11-7-14\03-01 EROSION CONTROL PLAN.dwg USER: jcooper
DATE: Nov 05, 2014 1:49pm XREFS: GBS LF-MASTER-BASE BASE-CR51 CR 51 TOPO EX-CONTOURS
CAD FILE PATH: L:\proj\01\3905\01\1390530 - cr51\dwg\record drawings 11-7-14\03-01 erosion control plan.dwg

P-201312-01

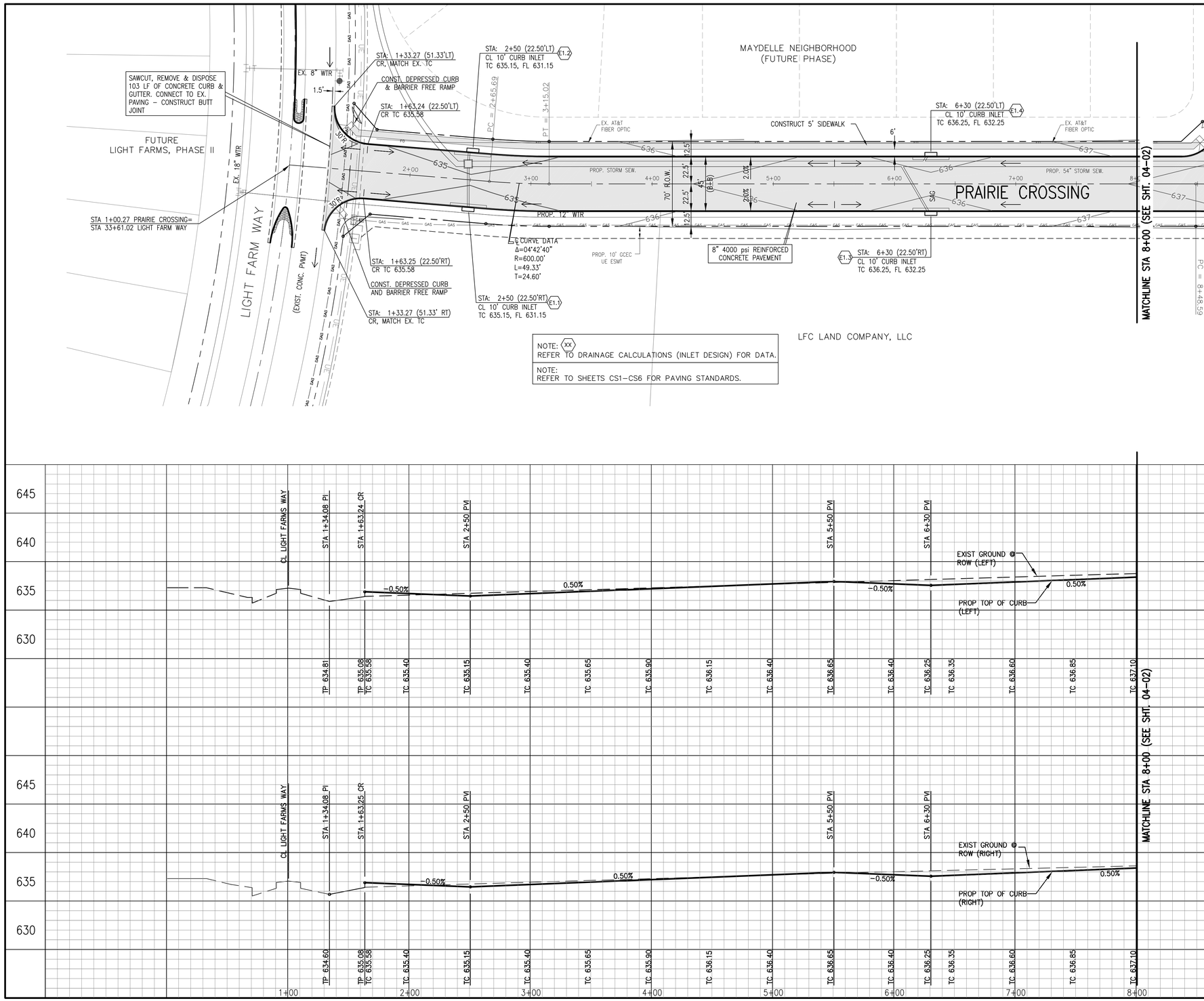

BASIS OF VERTICAL DATUM - NAVD 1988 based on National Geodetic Survey Benchmarks N-185 (Elevation 650.78') and H263 (Elevation - 643.81')

BENCHMARKS:

BM # 79 - Brass monument set on top of curb, southeast side of Light Farms Way, 520+- feet southwesterly from the centerline of Wildrye Ridge.
Elev. = 635.51'

BM # 80 - Brass monument set on curb Inlet, southeast side of Light Farms Way, 79+- feet northeasterly from the centerline of Wildrye Ridge.
Elev. = 633.47'

STATE OF TEXAS
ROBERT M. STENGELE
50145
REGISTERED PROFESSIONAL ENGINEER
11-5-14
Date: 11-05-2014
Huitt-Zollars, Inc.
Firm Registration No. F-761

RECORD DRAWING

THIS RECORD DOCUMENT HAS BEEN PREPARED BASED IN PART UPON INFORMATION FURNISED BY OTHERS. THE DESIGN PROFESSIONAL CANNOT ASSURE THE ACCURACY OF OTHERS' INFORMATION AND THUS IS NOT RESPONSIBLE FOR THE ACCURACY OF THIS RECORD DOCUMENT OR FOR ANY ERROR OR OMISSION THAT MAY HAVE BEEN INCORPORATED INTO IT AS A RESULT. THOSE RELYING ON THIS RECORD DOCUMENT ARE ADVIDED TO OBTAIN INDEPENDENT VERIFICATION OF ITS ACCURACY BEFORE APPLYING IT FOR ANT PURPOSE.

LIGHT FARMS

PAVING PLAN

(FROM STA 1+00.27 TO STA 8+00)

PRAIRIE CROSSING

(EX. COUNTY ROAD 51)

COLLIN COUNTY MUNICIPAL UTILITY DISTRICT NO.1

LFC LAND COMPANY, LLC
8401 North Central Expressway, Suite 350, Dallas, Texas 75225
Phone (214) 292-3410 Fax (214) 292-3411

HUITT-ZOLLARS
Huitt-Zollars, Inc. Dallas
1717 McKinney Avenue, Suite 1400
Dallas, Texas 75202-1236
Phone (214) 871-3311 Fax (214) 871-0757

SCALE	SHEET No.
AS SHOWN	04-01
DATE	
7/30/2014	

PROJECT NUMBER: 01-3905-30

DWG: I:\proj\01\3905\01\3905\30 - CR51\DWG\RECORD DRAWINGS 11-7-14\05-01 PAVING PLAN.dwg USER: jcooper
DATE: Nov 05, 2014 3:13pm XREFS: GBS BASE-CR51 CR 51 TOPO EX-CONTOURS PROF-ROAD LF-MASTER-BASE CONTOURS LF-MASTER-UTI

CAD FILE PATH: I:\proj\01\3905\01\3905\30 - cr51\dwg\record drawings 11-7-14\05-01 paving plan.dwg

P-201312-01

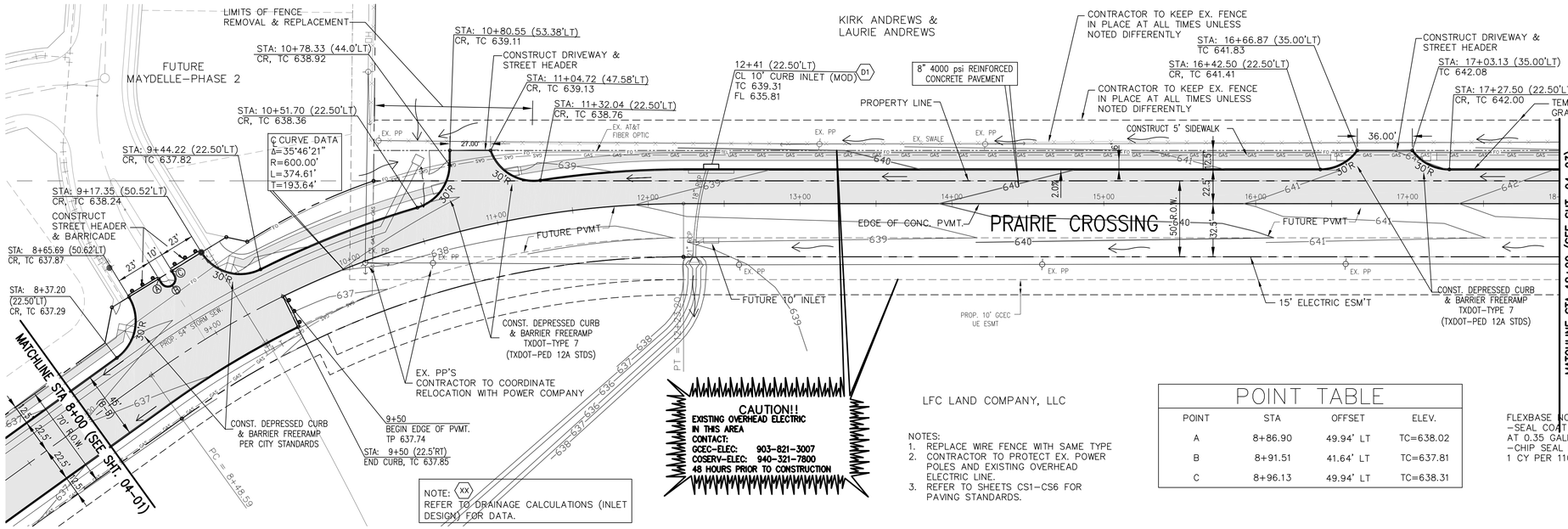

NOTES:
1. REPLACE WIRE FENCE WITH SAME TYPE
2. CONTRACTOR TO PROTECT EX. POWER POLES AND EXISTING OVERHEAD ELECTRIC LINE.
3. REFER TO SHEETS CS1-CS6 FOR PAVING STANDARDS.

POINT TABLE

POINT	STA	OFFSET	ELEV.
A	8+86.90	49.94' LT	TC=638.02
B	8+91.51	41.64' LT	TC=637.81
C	8+96.13	49.94' LT	TC=638.31

FLEXBASE NOTES:
-SEAL COAT FLEXBASE AT 0.35 GALLONS PER SY
-CHIP SEAL FLEXBASE AT 1 CY PER 110 SY

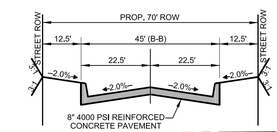

TYPICAL SECTION
(FROM STA 1+34.08 TO STA 9+50)

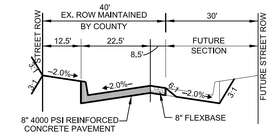

TYPICAL SECTION
(FROM STA 9+50 TO 21+00)

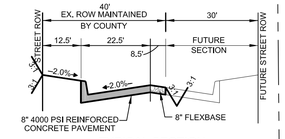

TYPICAL SECTION
(FROM STA 21+00 TO END)

NOTE: TYPICAL SECTION PER DETAIL C4U ON SHEET CS2

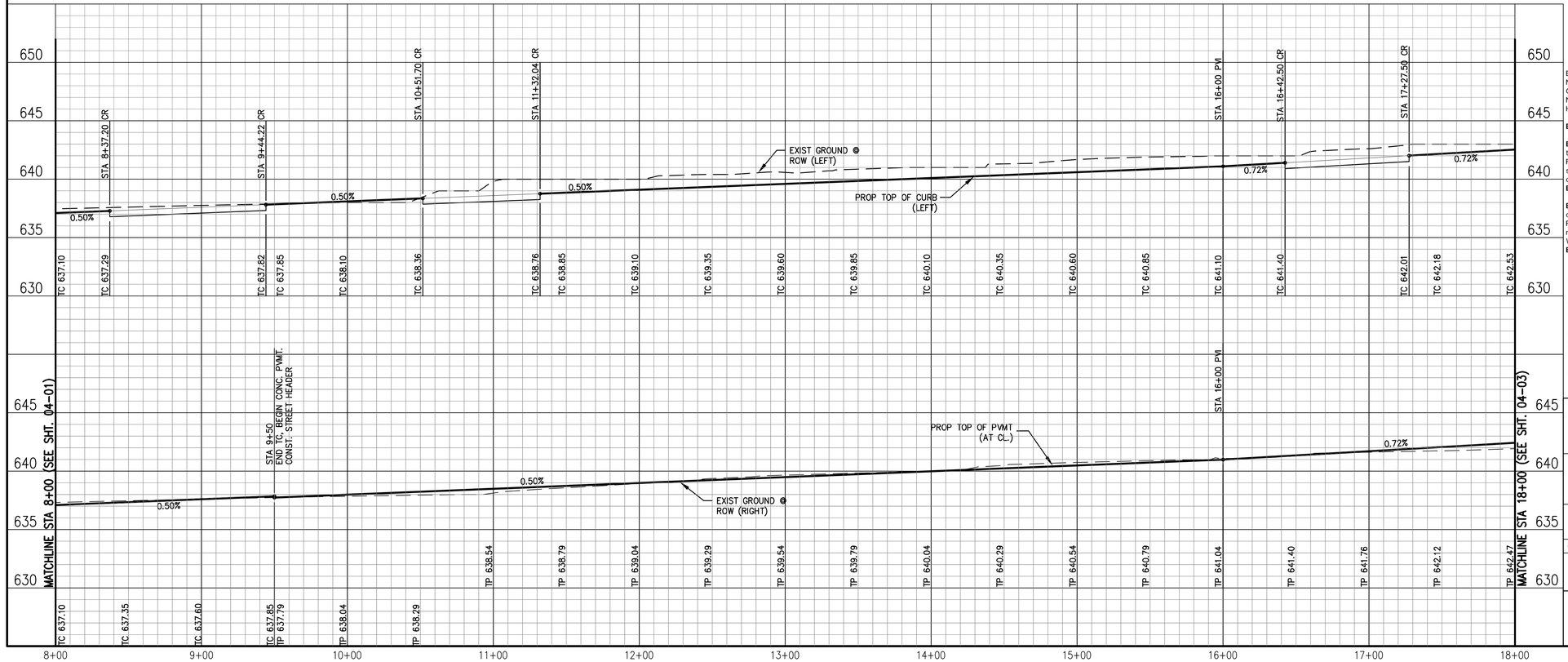

BASIS OF VERTICAL DATUM - NAVD 1988 based on National Geodetic Survey Benchmarks N-185 (Elevation 650.78') and H263 (Elevation - 643.81')

BENCHMARKS:

BM # 79 - Brass monument set on top of curb, southeast side of Light Farms Way, 520+- feet southwesterly from the centerline of Wildrye Ridge.
Elev. = 635.51'

BM # 80 - Brass monument set on curb inlet, southeast side of Light Farms Way, 79+- feet northeasterly from the centerline of Wildrye Ridge.
Elev. = 633.47'

STATE OF TEXAS
ROBERT M. STENGELE
50145
REGISTERED PROFESSIONAL ENGINEER
11-5-14
Date: 11-05-2014
Huitt-Zollars, Inc.
Firm Registration No. F-761

RECORD DRAWING

THIS RECORD DOCUMENT HAS BEEN PREPARED BASED IN PART UPON INFORMATION FURNISED BY OTHERS. THE DESIGN PROFESSIONAL CANNOT ASSURE THE ACCURACY OF OTHERS' INFORMATION AND THUS IS NOT RESPONSIBLE FOR THE ACCURACY OF THIS RECORD DOCUMENT OR FOR ANY ERROR OR OMISSION THAT MAY HAVE BEEN INCORPORATED INTO IT AS A RESULT. THOSE RELYING ON THIS RECORD DOCUMENT ARE ADVIDED TO OBTAIN INDEPENDENT VERIFICATION OF ITS ACCURACY BEFORE APPLYING IT FOR ANT PURPOSE.

LIGHT FARMS

PAVING PLAN

(FROM STA 8+00 TO STA 18+00)

PRAIRIE CROSSING

(EX. COUNTY ROAD 51)

COLLIN COUNTY MUNICIPAL UTILITY DISTRICT NO.1

LFC LAND COMPANY, LLC
8401 North Central Expressway, Suite 350, Dallas, Texas 75225
Phone (214) 292-3410 Fax (214) 292-3411

HUITT-ZOLLARS
Huitt-Zollars, Inc. Dallas
1717 McKinney Avenue, Suite 1400
Dallas, Texas 75202-1236
Phone (214) 871-3311 Fax (214) 871-0757

SCALE: AS SHOWN
DATE: 7/30/2014
SHEET No. 04-02

PROJECT NUMBER: 01-3905-30

DWG: I:\proj\013905001\01390530 - CR51\DWG\RECORD DRAWINGS 11-7-14\05-01 PAVING PLAN.dwg USER: jcooper
DATE: Nov 05, 2014 3:13pm XREFS: GBS BASE-CR51 CR 51 TOPO EX-CONTOURS PROF-ROAD LF-MASTER-BASE CONTOURS LF-MASTER-UTI

CAD FILE PATH: \\proj\013905001\013905030 - cr51\dwg\record drawings 11-7-14\05-01 paving plan.dwg

P-201312-01

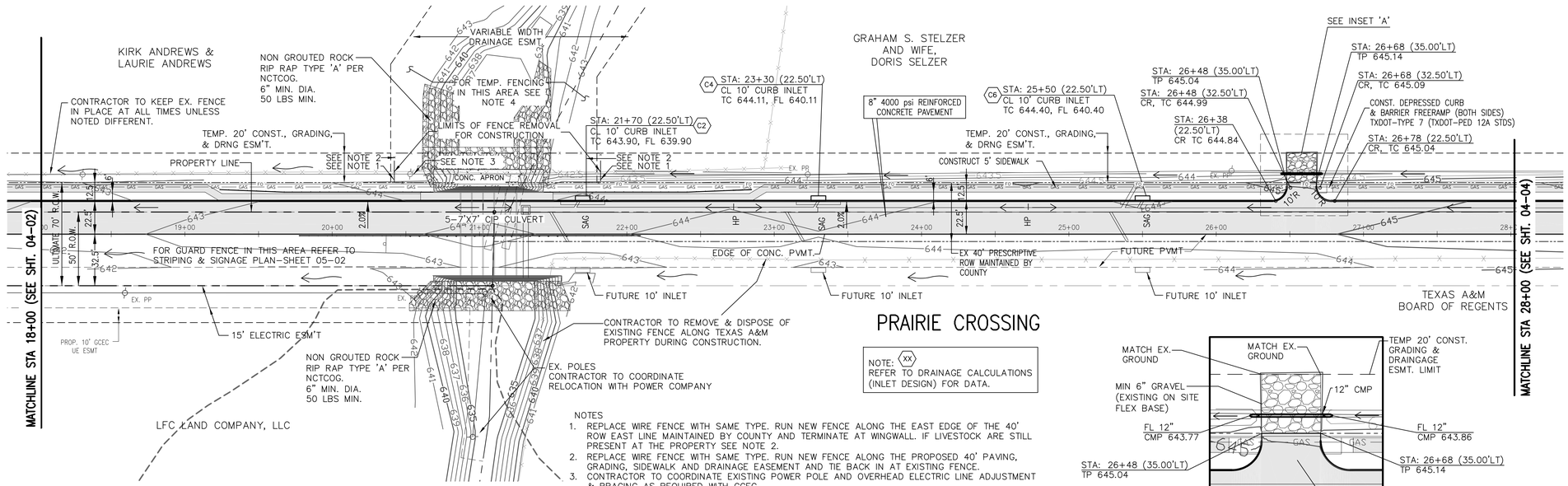

PRAIRIE CROSSING

NOTE: (XX) REFER TO DRAINAGE CALCULATIONS (INLET DESIGN) FOR DATA.

NOTES

1. REPLACE WIRE FENCE WITH SAME TYPE. RUN NEW FENCE ALONG THE EAST EDGE OF THE 40' ROW EAST LINE MAINTAINED BY COUNTY AND TERMINATE AT WINGWALL. IF LIVESTOCK ARE STILL PRESENT AT THE PROPERTY SEE NOTE 2.
2. REPLACE WIRE FENCE WITH SAME TYPE. RUN NEW FENCE ALONG THE PROPOSED 40' PAVING, GRADING, SIDEWALK AND DRAINAGE EASEMENT AND TIE BACK IN AT EXISTING FENCE.
3. CONTRACTOR TO COORDINATE EXISTING POWER POLE AND OVERHEAD ELECTRIC LINE ADJUSTMENT & BRACING AS REQUIRED WITH GCEC.
4. CONTRACTOR SHALL PROVIDE TEMPORARY FENCING AROUND THE VARIABLE DRAINAGE EASEMENT DURING CONSTRUCTION IN THE EVENT THAT LIVESTOCK ARE STILL PRESENT ON THE PROPERTY.
3. REFER TO SHEETS CS1-CS6 FOR PAVING STANDARDS.

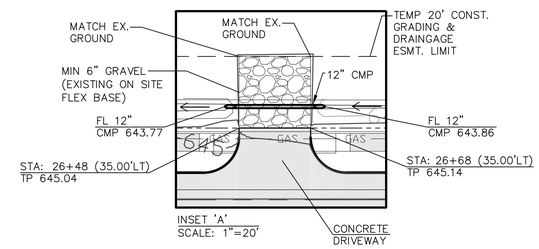

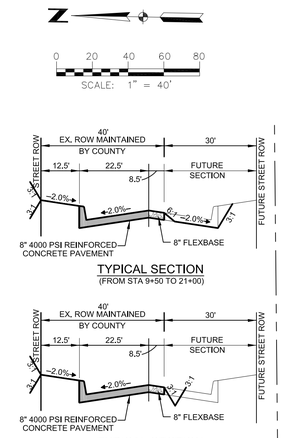

TYPICAL SECTION
(FROM STA 9+50 TO 21+00)

TYPICAL SECTION
(FROM STA 21+00 TO END)

NOTE: TYPICAL SECTION PER DETAIL C4U ON SHEET CS2

FLEXBASE NOTES:
-SEAL COAT FLEXBASE AT 0.35 GALLONS PER SY
-CHIP SEAL FLEXBASE AT 1 CY PER 110 SY

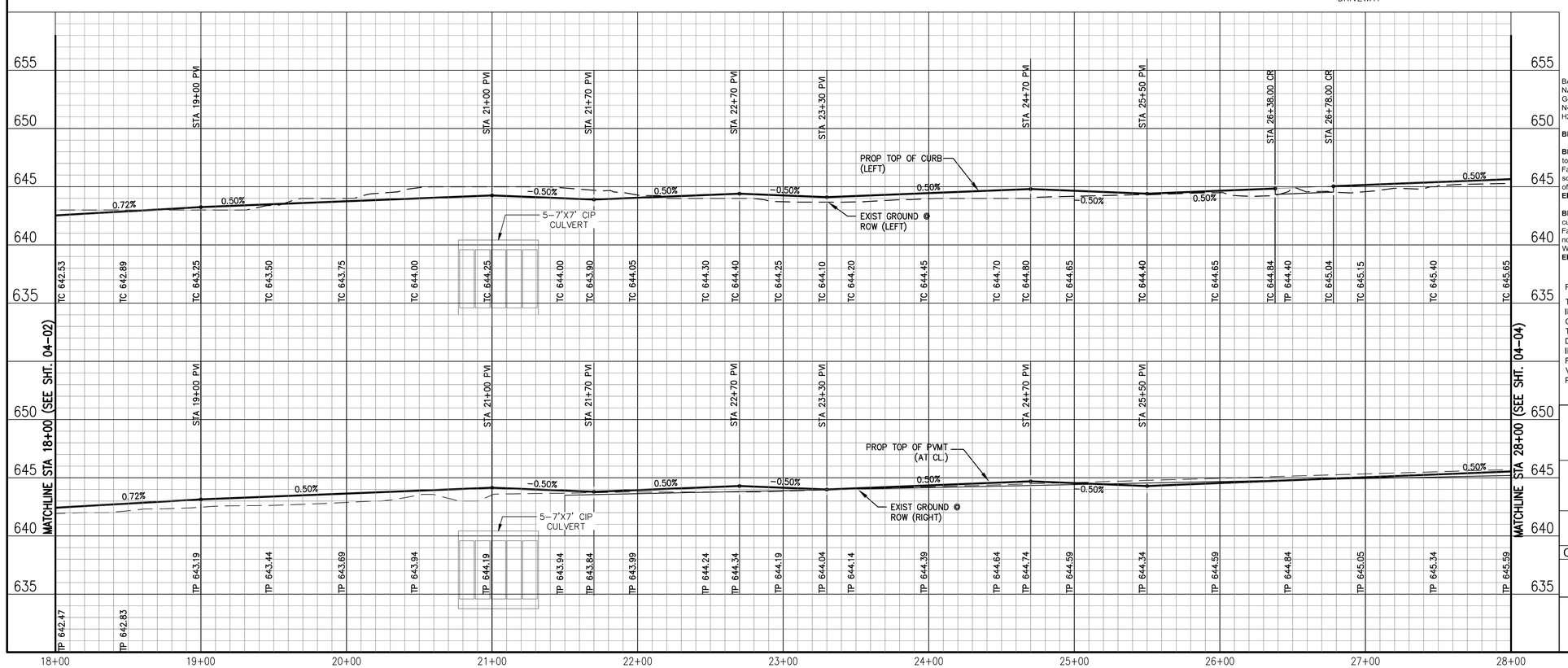

BASIS OF VERTICAL DATUM - NAVD 1988 based on National Geodetic Survey Benchmarks N-185 (Elevation 650.78') and H263 (Elevation - 643.81')

BENCHMARKS:

BM # 79 - Brass monument set on top of curb, southeast side of Light Farms Way, 520+- feet southwesterly from the centerline of Wildrye Ridge.
Elev. = 635.51'

BM # 80 - Brass monument set on curb inlet, southeast side of Light Farms Way, 79+- feet northeasterly from the centerline of Wildrye Ridge.
Elev. = 633.47'

STATE OF TEXAS
ROBERT M. STENGELE
50145
REGISTERED PROFESSIONAL ENGINEER
11-5-14
Date: 11-05-2014
Hultt-Zollars, Inc.
Firm Registration No. F-761

RECORD DRAWING

THIS RECORD DOCUMENT HAS BEEN PREPARED BASED IN PART UPON INFORMATION FURNISED BY OTHERS. THE DESIGN PROFESSIONAL CANNOT ASSURE THE ACCURACY OF OTHERS' INFORMATION AND THUS IS NOT RESPONSIBLE FOR THE ACCURACY OF THIS RECORD DOCUMENT OR FOR ANY ERROR OR OMISSION THAT MAY HAVE BEEN INCORPORATED INTO IT AS A RESULT. THOSE RELYING ON THIS RECORD DOCUMENT ARE ADVIDED TO OBTAIN INDEPENDENT VERIFICATION OF ITS ACCURACY BEFORE APPLYING IT FOR ANT PURPOSE.

LIGHT FARMS

PAVING PLAN

(FROM STA 18+00 TO STA 28+00)

PRAIRIE CROSSING

(EX. COUNTY ROAD 51)

COLLIN COUNTY MUNICIPAL UTILITY DISTRICT NO.1

LFC LAND COMPANY, LLC
8401 North Central Expressway, Suite 350, Dallas, Texas 75225
Phone (214) 292-3410 Fax (214) 292-3411

HULTT-ZOLLARS
Hultt-Zollars, Inc. Dallas
1717 McKinney Avenue, Suite 1400
Dallas, Texas 75202-1236
Phone (214) 871-3311 Fax (214) 871-0757

SCALE	SHEET No.
AS SHOWN	04-03
DATE 7/30/2014	

PROJECT NUMBER: 01-3905-30

DWG: I:\proj\013905001\01390530 - CR51\DWG\RECORD DRAWINGS 11-7-14\05-01 PAVING PLAN.dwg USER: jcooper
DATE: Nov 05, 2014 3:14pm XREFS: GBS BASE-CR51 CR 51 TOPO EX-CONTOURS PROF-ROAD LF-MASTER-BASE CONTOURS LF-MASTER-UTI

CAD FILE PATH: \\pnw\013905001\013905030 - cr51\dwg\record drawings 11-7-14\05-01 paving plan.dwg

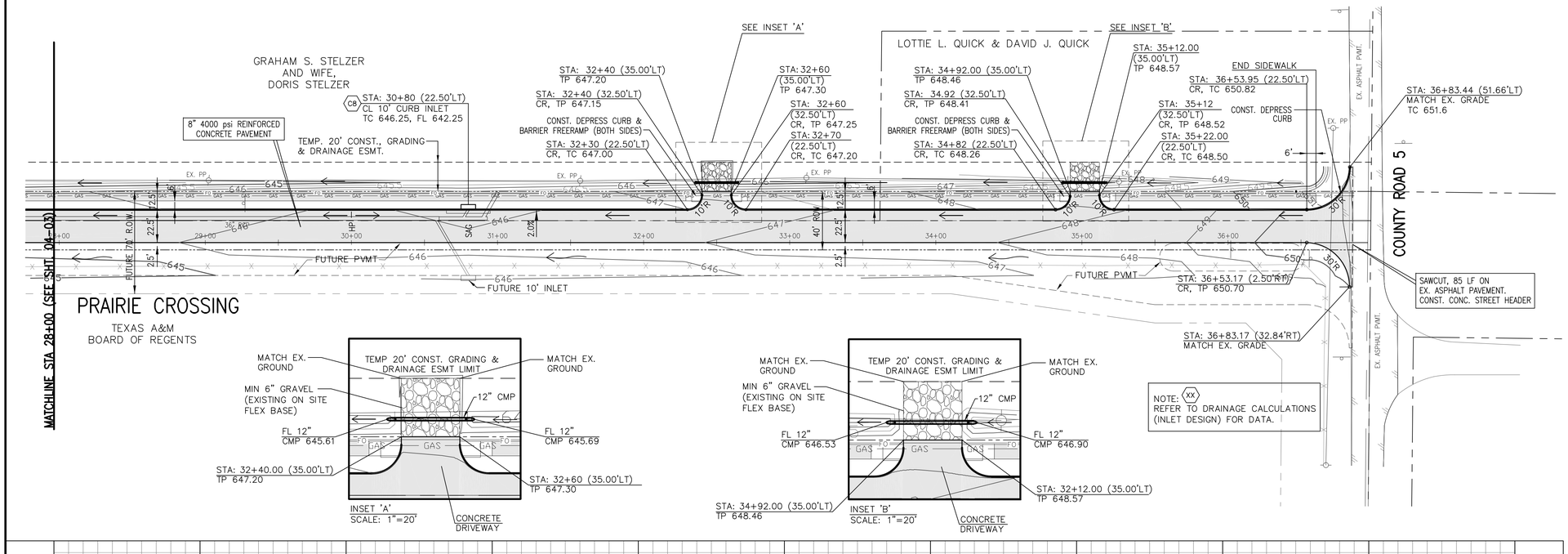

FLEXBASE NOTES:
-SEAL COAT FLEXBASE AT 0.35 GALLONS PER SY
-CHIP SEAL FLEXBASE AT 1 CY PER 110 SY

BASIS OF VERTICAL DATUM - NAVD 1988 based on National Geodetic Survey Benchmarks N-185 (Elevation 650.78') and H263 (Elevation - 643.81')

BENCHMARKS:

BM # 79 - Brass monument set on top of curb, southeast side of Light Farms Way, 520+- feet southwesterly from the centerline of Wildrye Ridge.
Elev. = 635.51'

BM # 80 - Brass monument set on curb inlet, southeast side of Light Farms Way, 79+- feet northeasterly from the centerline of Wildrye Ridge.
Elev. = 633.47'

STATE OF TEXAS
ROBERT M. STENGELE
50145
REGISTERED
PROFESSIONAL ENGINEER
11-5-14
Date: 11-05-2014

Huitt-Zollars, Inc.
Firm Registration No. F-761

RECORD DRAWING

THIS RECORD DOCUMENT HAS BEEN PREPARED BASED IN PART UPON INFORMATION FURNISED BY OTHERS. THE DESIGN PROFESSIONAL CANNOT ASSURE THE ACCURACY OF OTHERS' INFORMATION AND THUS IS NOT RESPONSIBLE FOR THE ACCURACY OF THIS RECORD DOCUMENT OR FOR ANY ERROR OR OMISSION THAT MAY HAVE BEEN INCORPORATED INTO IT AS A RESULT. THOSE RELYING ON THIS RECORD DOCUMENT ARE ADVIDED TO OBTAIN INDEPENDENT VERIFICATION OF ITS ACCURACY BEFORE APPLYING IT FOR ANT PURPOSE.

LIGHT FARMS

PAVING PLAN

(FROM STA 28+00 TO THE END)

PRAIRIE CROSSING

(EX. COUNTY ROAD 51)

COLLIN COUNTY MUNICIPAL UTILITY DISTRICT NO.1

LFC LAND COMPANY, LLC
8401 North Central Expressway, Suite 350, Dallas, Texas 75225
Phone (214) 292-3410 Fax (214) 292-3411

HUITT-ZOLLARS
Huitt-Zollars, Inc. Dallas
1717 McKinney Avenue, Suite 1400
Dallas, Texas 75202-1236
Phone (214) 871-3311 Fax (214) 871-0757

SCALE	SHEET No.
AS SHOWN	04-04
DATE 7/30/2014	

PROJECT NUMBER: 01-3905-30

CAD FILE PATH: \\pro\01390501\01390530 - cr51\dwg\record drawings 11-7-14\05-01 paving plan.dwg

DWG: l:\pro\01390501\01390530 - CR51\DWG\RECORD DRAWINGS 11-7-14\05-01 PAVING PLAN.dwg USER: jcooper
DATE: Nov 05, 2014 3:15pm XREFS: GBS BASE-CR51 CR 51 TOPO EX-CONTOURS PROF-ROAD LF-MASTER-BASE CONTOURS LF-MASTER-JTI

P-201312-01

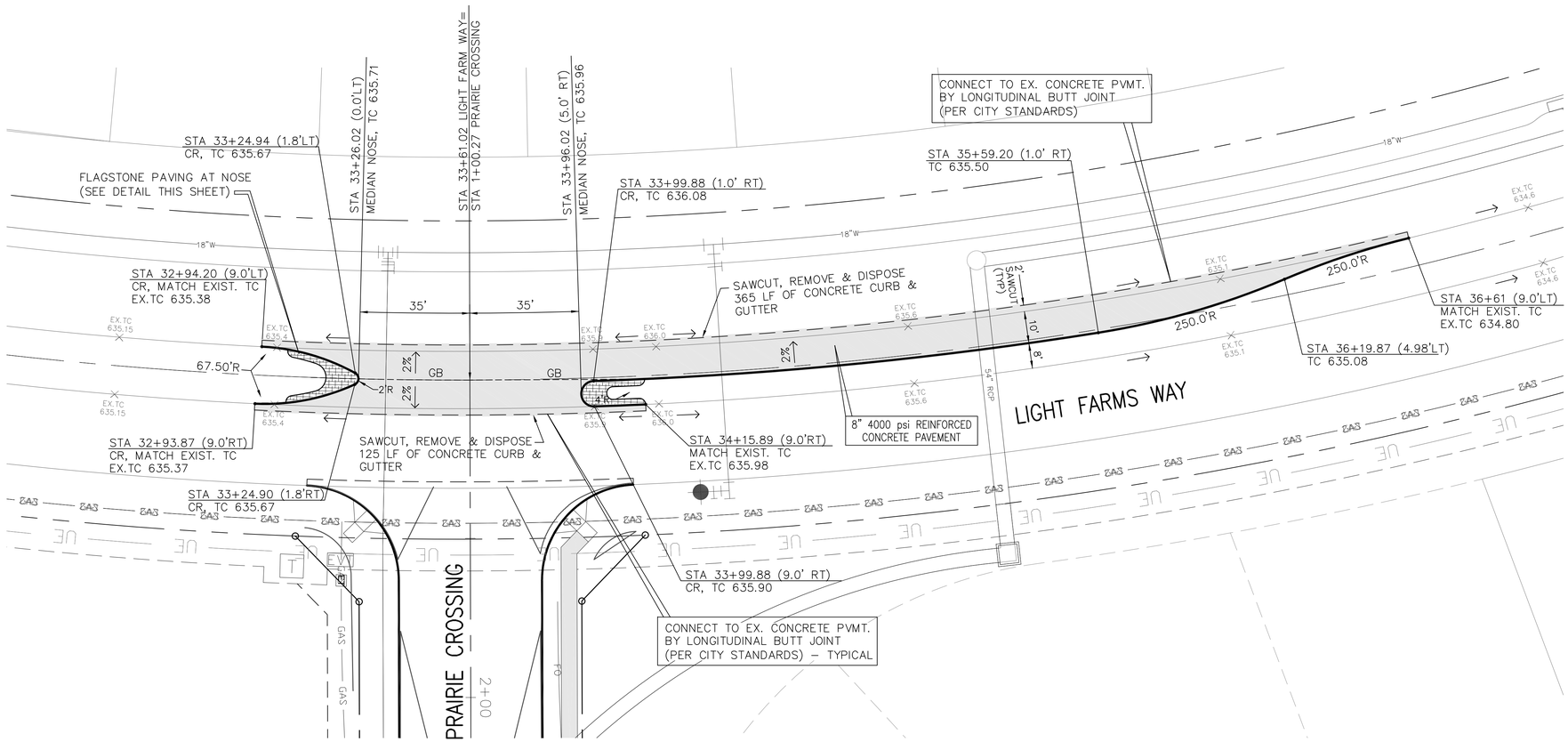

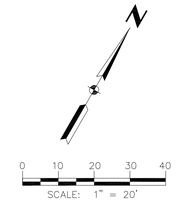

NOTES:

1. ALL CONCRETE AND CONCRETE CURBS WILL BE 4000 PSI REINFORCED CONCRETE MOUNTABLE CURB, EXCEPT AS NOTED. (SEE MOUNTABLE CURB DETAIL)
2. CONTRACTOR TO KEEP ONE LANE OF TRAFFIC OPEN EACH WAY AT ALL TIMES.
3. TRAFFIC CONTROL SHALL BE PER TxDOT STANDARDS.
4. CONTRACTOR TO RELOCATE IRRIGATION, COORDINATE WITH LANDSCAPE CONTRACTOR FOR DETAILS.
5. CONTRACTOR TO BACKFILL BEHIND CURB FOR ALL AREAS. REPAIR AND/OR REPLACE LANDSCAPE GROUNDCOVER AS NEEDED.

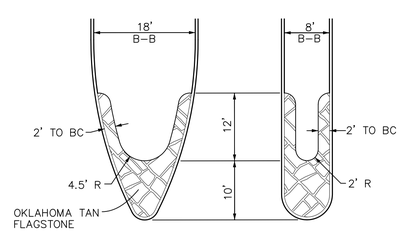

FLAGSTONE NOSINGS DETAIL

N.T.S.

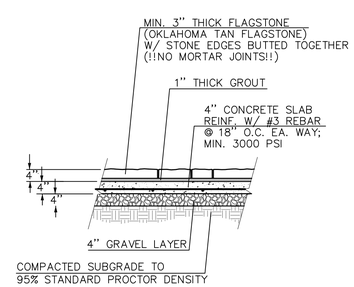

FLAGSTONE PAVING

BASIS OF VERTICAL DATUM - NAVD 1988 based on National Geodetic Survey Benchmarks N-185 (Elevation 650.78') and H263 (Elevation - 643.81')

BENCHMARKS:

BM # 79 - Brass monument set on top of curb, southeast side of Light Farms Way, 520+- feet southwesterly from the centerline of Wildrye Ridge.
Elev. = 635.51'

BM # 80 - Brass monument set on curb inlet, southeast side of Light Farms Way, 79+- feet northeasterly from the centerline of Wildrye Ridge.
Elev. = 633.47'

STATE OF TEXAS
ROBERT M. STENGELE
50145
REGISTERED
PROFESSIONAL ENGINEER
11-5-14
Date: 11-05-2014
Hulitt-Zollars, Inc.
Firm Registration No. F-761

RECORD DRAWING

THIS RECORD DOCUMENT HAS BEEN PREPARED BASED IN PART UPON INFORMATION FURNISED BY OTHERS. THE DESIGN PROFESSIONAL CANNOT ASSURE THE ACCURACY OF OTHERS' INFORMATION AND THUS IS NOT RESPONSIBLE FOR THE ACCURACY OF THIS RECORD DOCUMENT OR FOR ANY ERROR OR OMISSION THAT MAY HAVE BEEN INCORPORATED INTO IT AS A RESULT. THOSE RELYING ON THIS RECORD DOCUMENT ARE ADVIDED TO OBTAIN INDEPENDENT VERIFICATION OF ITS ACCURACY BEFORE APPLYING IT FOR ANT PURPOSE.

LIGHT FARMS

PAVING PLAN

OPEN MEDIAN & LEFT TURN LANE DETAIL

PRAIRIE CROSSING

(EX. COUNTY ROAD 51)

COLLIN COUNTY MUNICIPAL UTILITY DISTRICT NO.1

LFC LAND COMPANY, LLC
8401 North Central Expressway, Suite 350, Dallas, Texas 75225
Phone (214) 292-3410 Fax (214) 292-3411

HULITT-ZOLLARS
Hulitt-Zollars, Inc. Dallas
1717 McKinney Avenue, Suite 1400
Dallas, Texas 75202-1236
Phone (214) 871-3311 Fax (214) 871-0757

SCALE	SHEET No.
DATE 7/30/2014	04-05

PROJECT NUMBER: 01-3905-30

DWG: I:\proj\01\3905\01\1390530 - CR51\DWG\RECORD DRAWINGS 11-7-14\05-01 PAVING PLAN.dwg USER: jcooper
DATE: Nov 05, 2014 3:15pm XREFS: GBS BASE-CR51 CR 51 TOPO EX-CONTOURS PROF-ROAD LF-MASTER-BASE CONTOURS LF-MASTER-UTI
CAD FILE PATH: \proj\01\3905\01\1390530 – cr51\dwg\record drawings 11-7-14\05-01 paving plan.dwg

P-201312-01

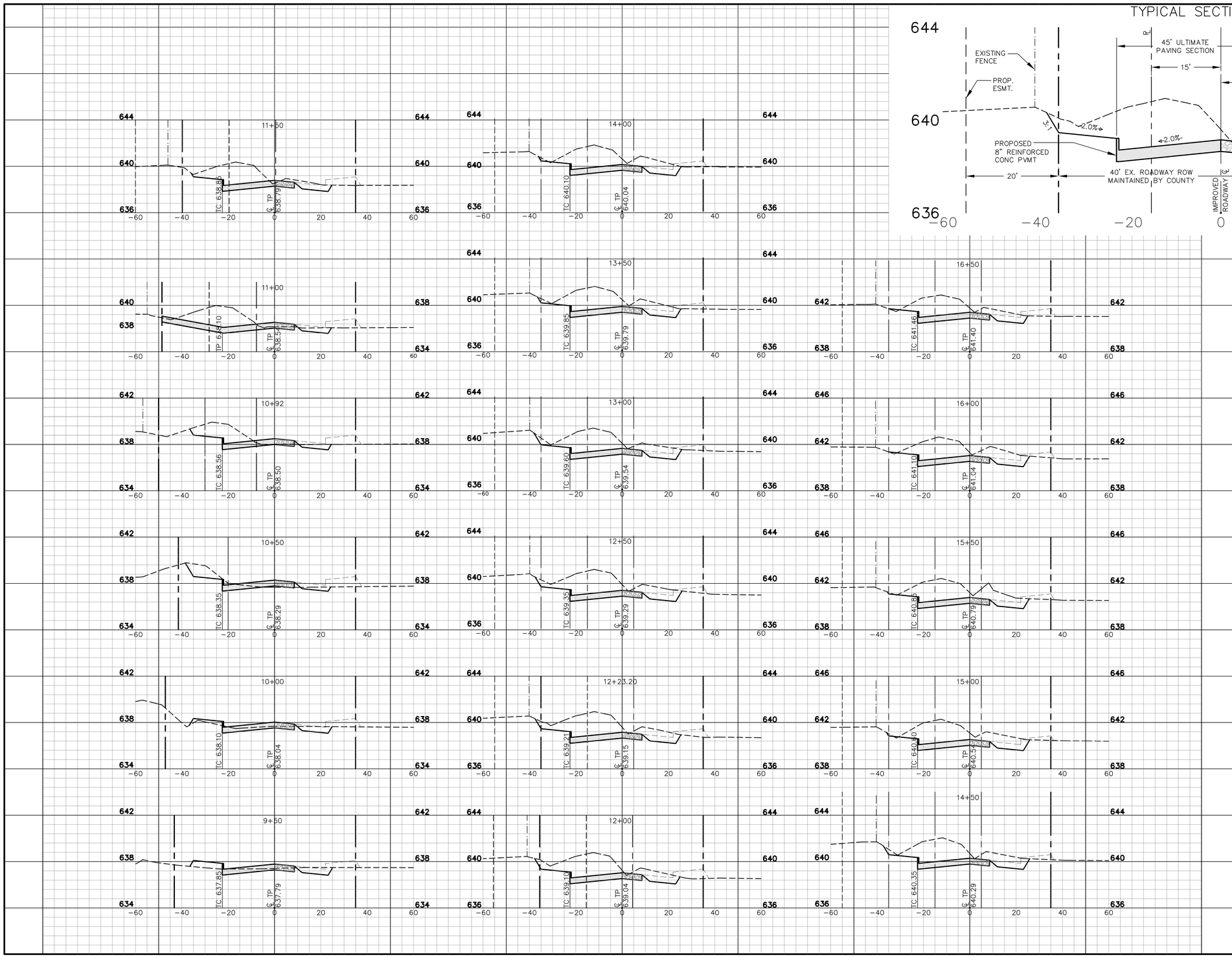

TYPICAL SECTION LEGEND

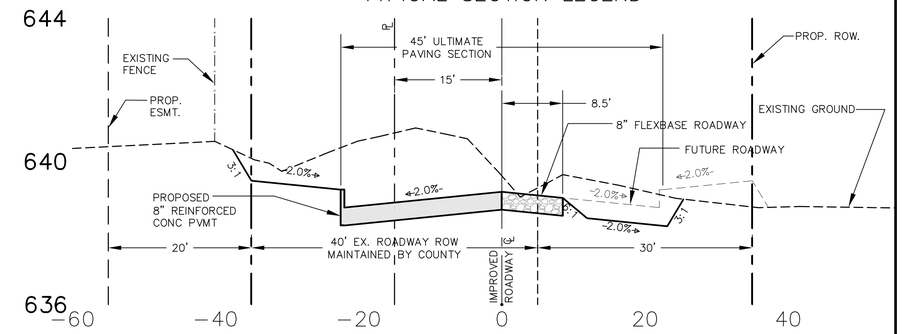

BASIS OF VERTICAL DATUM - NAVD 1988 based on National Geodetic Survey Benchmarks N-185 (Elevation 650.78') and H263 (Elevation - 643.81')

BENCHMARKS:

BM # 79 - Brass monument set on top of curb, southeast side of Light Farms Way, 520+- feet southwesterly from the centerline of Wildrye Ridge.
Elev. = 635.51'

BM # 80 - Brass monument set on curb inlet, southeast side of Light Farms Way, 79+- feet northeasterly from the centerline of Wildrye Ridge.
Elev. = 633.47'

STATE OF TEXAS
ROBERT M. STENGELE
50145
REGISTERED
PROFESSIONAL ENGINEER

11-5-14
Date: 11-05-2014

Huitt-Zollars, Inc.
Firm Registration No. F-761

RECORD DRAWING

THIS RECORD DOCUMENT HAS BEEN PREPARED BASED IN PART UPON INFORMATION FURNISED BY OTHERS. THE DESIGN PROFESSIONAL CANNOT ASSURE THE ACCURACY OF OTHERS' INFORMATION AND THUS IS NOT RESPONSIBLE FOR THE ACCURACY OF THIS RECORD DOCUMENT OR FOR ANY ERROR OR OMISSION THAT MAY HAVE BEEN INCORPORATED INTO IT AS A RESULT. THOSE RELYING ON THIS RECORD DOCUMENT ARE ADVIDED TO OBTAIN INDEPENDENT VERIFICATION OF ITS ACCURACY BEFORE APPLYING IT FOR ANT PURPOSE.

LIGHT FARMS

PAVING CROSS SECTIONS
FROM STA 9+50 - TO 16+50

PRAIRIE CROSSING
(EX. COUNTY ROAD 51)

COLLIN COUNTY MUNICIPAL UTILITY DISTRICT NO.1

LFC LAND COMPANY, LLC
8401 North Central Expressway, Suite 350, Dallas, Texas 75225
Phone (214) 292-3410 Fax (214) 292-3411

HUITT-ZOLLARS
Huitt-Zollars, Inc. Dallas
1717 McKinney Avenue, Suite 1400
Dallas, Texas 75202-1236
Phone (214) 871-3311 Fax (214) 871-0757

SCALE	SHEET No.
H: 1" - 20' V: 1" - 4'	04-06
DATE 7/30/2014	

PROJECT NUMBER: 01-3905-30

DWG: I:\proj\013905\01\01390530 - CR51\DWG\RECORD DRAWINGS 11-7-14\04-06 CROSSSECTIONS-ROAD.dwg USER: jcooper
DATE: Nov 05, 2014 1:54pm XREFS: LF-MASTER-BASE BASE BASE-CR51 SURFACE - GIS GBS GBS_Cross Sections CONTOURS

CAD FILE PATH: I:\proj\013905\01\01390530 - cr51\dwg\record drawings 11-7-14\04-06 crosssections-road.dwg

P-201312-01

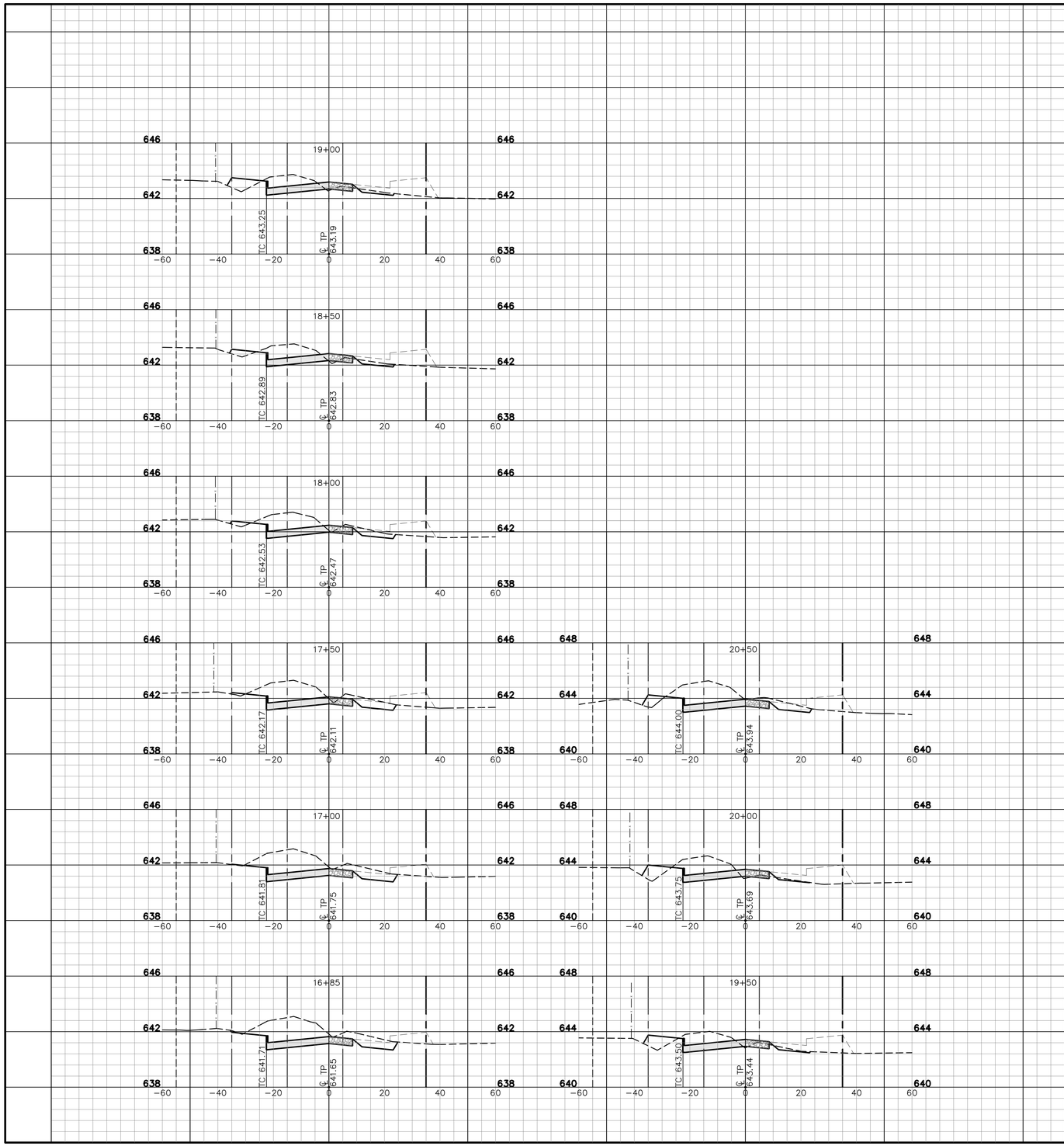

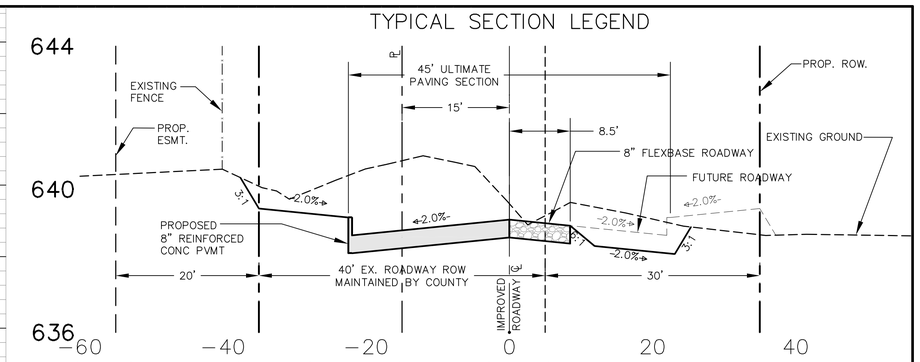

BASIS OF VERTICAL DATUM - NAVD 1988 based on National Geodetic Survey Benchmarks N-185 (Elevation 650.78') and H263 (Elevation - 643.81')

BENCHMARKS:

BM # 79 - Brass monument set on top of curb, southeast side of Light Farms Way, 520+- feet southwesterly from the centerline of Wildrye Ridge.
Elev. = 635.51'

BM # 80 - Brass monument set on curb inlet, southeast side of Light Farms Way, 79+- feet northeasterly from the centerline of Wildrye Ridge.
Elev. = 633.47'

STATE OF TEXAS
ROBERT M. STENGELE
50145
REGISTERED PROFESSIONAL ENGINEER
11-5-14
Date: 11-05-2014
Huitt-Zollars, Inc.
Firm Registration No. F-761

RECORD DRAWING

THIS RECORD DOCUMENT HAS BEEN PREPARED BASED IN PART UPON INFORMATION FURNISED BY OTHERS. THE DESIGN PROFESSIONAL CANNOT ASSURE THE ACCURACY OF OTHERS' INFORMATION AND THUS IS NOT RESPONSIBLE FOR THE ACCURACY OF THIS RECORD DOCUMENT OR FOR ANY ERROR OR OMISSION THAT MAY HAVE BEEN INCORPORATED INTO IT AS A RESULT. THOSE RELYING ON THIS RECORD DOCUMENT ARE ADVIDED TO OBTAIN INDEPENDENT VERIFICATION OF ITS ACCURACY BEFORE APPLYING IT FOR ANT PURPOSE.

LIGHT FARMS

PAVING CROSS SECTIONS
FROM STA 16+85 - TO 20+50

PRAIRIE CROSSING
(EX. COUNTY ROAD 51)

COLLIN COUNTY MUNICIPAL UTILITY DISTRICT NO.1

LFC LAND COMPANY, LLC
8401 North Central Expressway, Suite 350, Dallas, Texas 75225
Phone (214) 292-3410 Fax (214) 292-3411

HUITT-ZOLLARS
Huitt-Zollars, Inc. Dallas
1717 McKinney Avenue, Suite 1400
Dallas, Texas 75202-1236
Phone (214) 871-3311 Fax (214) 871-0757

SCALE	SHEET No.
H: 1" - 20' V: 1" - 4'	04-07
DATE 7/30/2014	

PROJECT NUMBER: 01-3905-30

DWG: I:\proj\01390501\01390530 - CR51\DWG\RECORD DRAWINGS 11-7-14\04-06 CROSSSECTIONS-ROAD.dwg USER: jcooper
DATE: Nov 05, 2014 1:55pm XREFS: LF-MASTER-BASE BASE BASE-CR51 SURFACE - GIS GBS GBS_Cross Sections CONTOURS

CAD FILE PATH: I:\proj\01390501\01390530 - cr51\dwg\record drawings 11-7-14\04-06 crosssections-road.dwg

P-201312-01

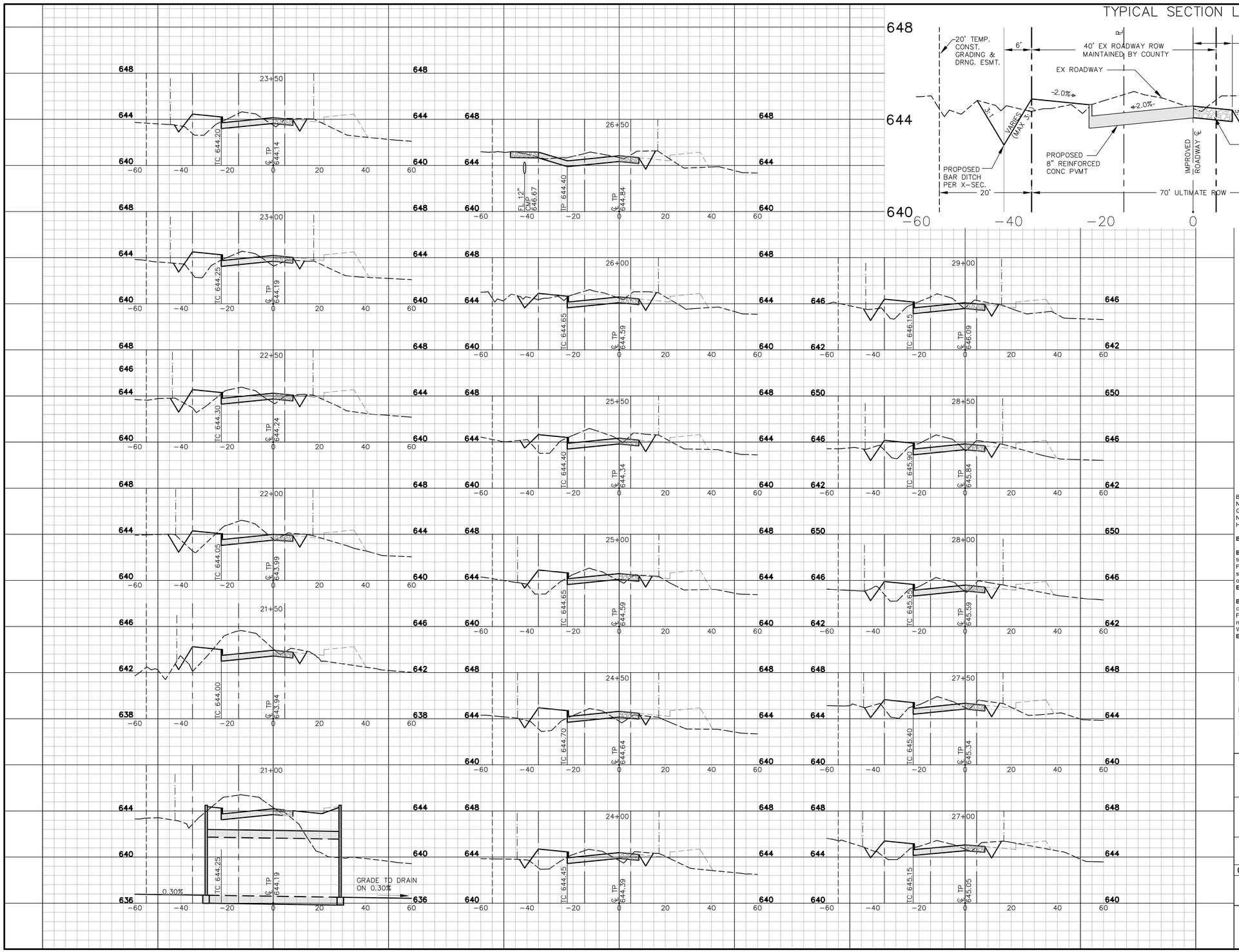

TYPICAL SECTION LEGEND

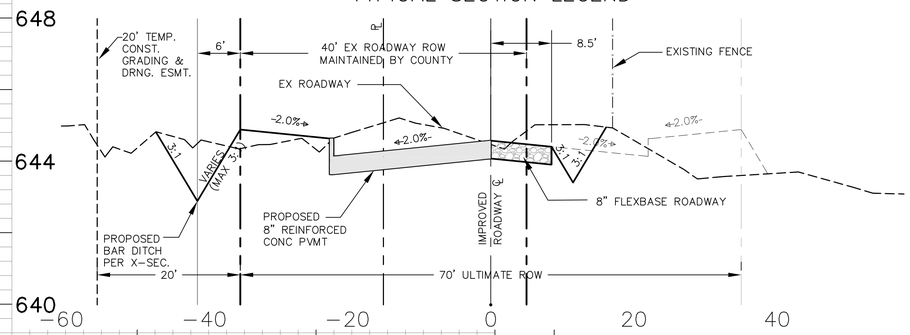

BASIS OF VERTICAL DATUM - NAVD 1988 based on National Geodetic Survey Benchmarks N-185 (Elevation 650.78') and H263 (Elevation - 643.81')

BENCHMARKS:

BM # 79 - Brass monument set on top of curb, southeast side of Light Farms Way, 520+- feet southwesterly from the centerline of Wildrye Ridge.
Elev. = 635.51'

BM # 80 - Brass monument set on curb inlet, southeast side of Light Farms Way, 79+- feet northeasterly from the centerline of Wildrye Ridge.
Elev. = 633.47'

STATE OF TEXAS
ROBERT M. STENGELE
50145
REGISTERED
PROFESSIONAL ENGINEER
11-5-14
Date: 11-05-2014

Huitt-Zollars, Inc.
Firm Registration No. F-761

RECORD DRAWING

THIS RECORD DOCUMENT HAS BEEN PREPARED BASED IN PART UPON INFORMATION FURNISED BY OTHERS. THE DESIGN PROFESSIONAL CANNOT ASSURE THE ACCURACY OF OTHERS' INFORMATION AND THUS IS NOT RESPONSIBLE FOR THE ACCURACY OF THIS RECORD DOCUMENT OR FOR ANY ERROR OR OMISSION THAT MAY HAVE BEEN INCORPORATED INTO IT AS A RESULT. THOSE RELYING ON THIS RECORD DOCUMENT ARE ADVIDED TO OBTAIN INDEPENDENT VERIFICATION OF ITS ACCURACY BEFORE APPLYING IT FOR ANT PURPOSE.

LIGHT FARMS

PAVING CROSS SECTIONS
FROM STA 21+00 - TO 29+00

PRAIRIE CROSSING
(EX. COUNTY ROAD 51)

COLLIN COUNTY MUNICIPAL UTILITY DISTRICT NO.1

LFC LAND COMPANY, LLC
8401 North Central Expressway, Suite 350, Dallas, Texas 75225
Phone (214) 292-3410 Fax (214) 292-3411

HUITT-ZOLLARS
Huitt-Zollars, Inc. Dallas
1717 McKinney Avenue, Suite 1400
Dallas, Texas 75202-1236
Phone (214) 871-3311 Fax (214) 871-0757

SCALE	SHEET No.
H: 1" = 20' V: 1" = 4'	04-08
DATE 7/30/2014	

PROJECT NUMBER: 01-3905-30

DWG: I:\proj\013905\01\01390530 - CR51\DWG\RECORD DRAWINGS 11-7-14\04-06 CROSSSECTIONS-ROAD.dwg USER: jcooper
DATE: Nov 05, 2014 1:55pm XREFS: LF-MASTER-BASE BASE BASE-CR51 SURFACE - GIS GBS GBS_Cross Sections CONTOURS

CAD FILE PATH: I:\proj\013905\01\01390530 - cr51\dwg\record drawings 11-7-14\04-06 crosssections-road.dwg

P-201312-01

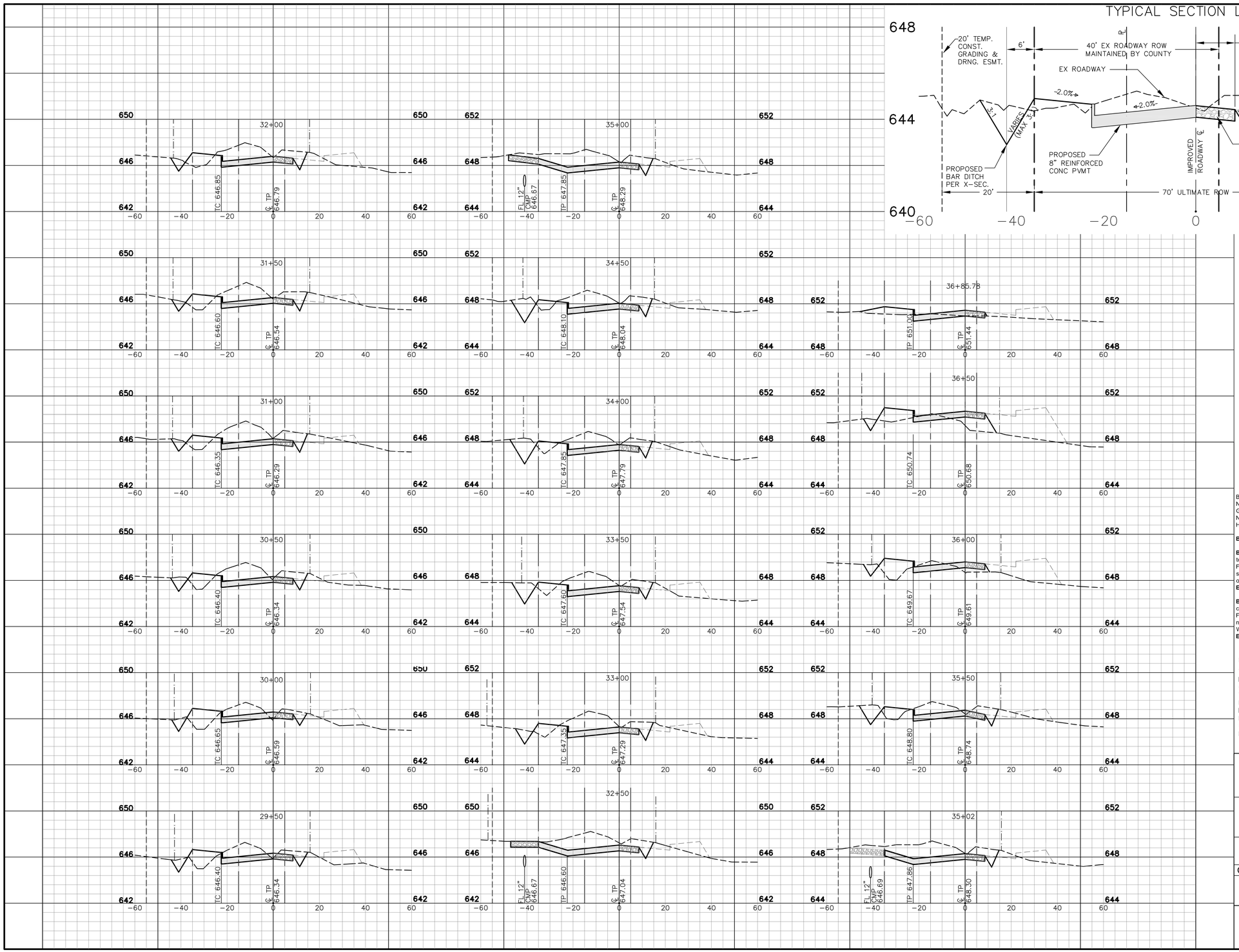

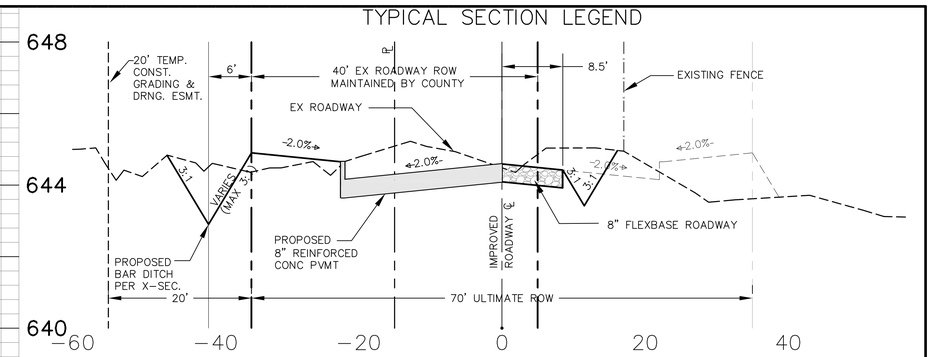

BASIS OF VERTICAL DATUM - NAVD 1988 based on National Geodetic Survey Benchmarks N-185 (Elevation 650.78') and H263 (Elevation - 643.81')

BENCHMARKS:

BM # 79 - Brass monument set on top of curb, southeast side of Light Farms Way, 520+- feet southwesterly from the centerline of Wildrye Ridge.
Elev. = 635.51'

BM # 80 - Brass monument set on curb inlet, southeast side of Light Farms Way, 79+- feet northeasterly from the centerline of Wildrye Ridge.
Elev. = 633.47'

STATE OF TEXAS
ROBERT M. STENGELE
50145
REGISTERED
PROFESSIONAL ENGINEER

11-5-14

Date: 11-05-2014

Hulitt-Zollars, Inc.
Firm Registration No. F-761

RECORD DRAWING

THIS RECORD DOCUMENT HAS BEEN PREPARED BASED IN PART UPON INFORMATION FURNISED BY OTHERS. THE DESIGN PROFESSIONAL CANNOT ASSURE THE ACCURACY OF OTHERS' INFORMATION AND THUS IS NOT RESPONSIBLE FOR THE ACCURACY OF THIS RECORD DOCUMENT OR FOR ANY ERROR OR OMISSION THAT MAY HAVE BEEN INCORPORATED INTO IT AS A RESULT. THOSE RELYING ON THIS RECORD DOCUMENT ARE ADVIDED TO OBTAIN INDEPENDENT VERIFICATION OF ITS ACCURACY BEFORE APPLYING IT FOR ANT PURPOSE.

LIGHT FARMS

PAVING CROSS SECTIONS
FROM STA 29+50 - TO 36+85.78

PRAIRIE CROSSING
(EX. COUNTY ROAD 51)

COLLIN COUNTY MUNICIPAL UTILITY DISTRICT NO.1

LFC LAND COMPANY, LLC
8401 North Central Expressway, Suite 350, Dallas, Texas 75225
Phone (214) 292-3410 Fax (214) 292-3411

HULITT-ZOLLARS
Hulitt-Zollars, Inc. Dallas
1717 McKinney Avenue, Suite 1400
Dallas, Texas 75202-1236
Phone (214) 871-3311 Fax (214) 871-0757

SCALE	SHEET No.
H: 1" - 20' V: 1" - 4'	04-09
DATE 7/30/2014	

PROJECT NUMBER: 01-3905-30

DWG: I:\proj\013905\01\01390530 - CR51\DWG\RECORD DRAWINGS 11-7-14\04-06 CROSSSECTIONS-ROAD.dwg USER: jcooper
DATE: Nov 05, 2014 1:56pm XREFS: LF-MASTER-BASE BASE BASE-CR51 SURFACE - GIS GBS GBS_Cross Sections CONTOURS

CAD FILE PATH: I:\proj\013905\01\01390530 - cr51\dwg\record drawings 11-7-14\04-06 crosssections-road.dwg

P-201312-01

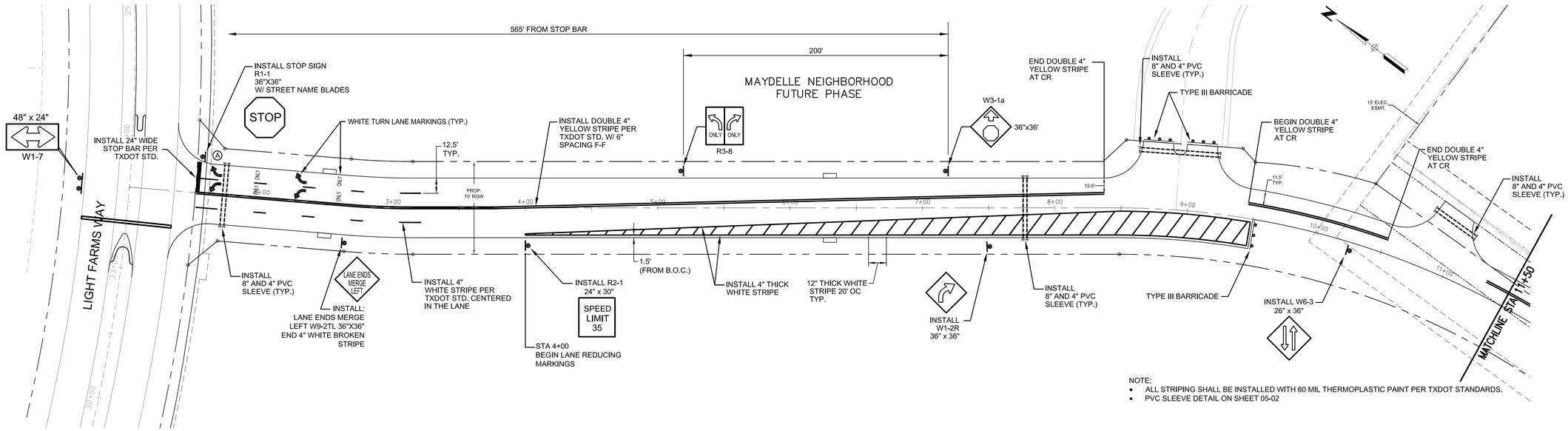

NOTE:
- ALL STRIPING SHALL BE INSTALLED WITH 60 MIL THERMOPLASTIC PAINT PER TXDOT STANDARDS.
- PVC SLEEVE DETAIL ON SHEET 05-02

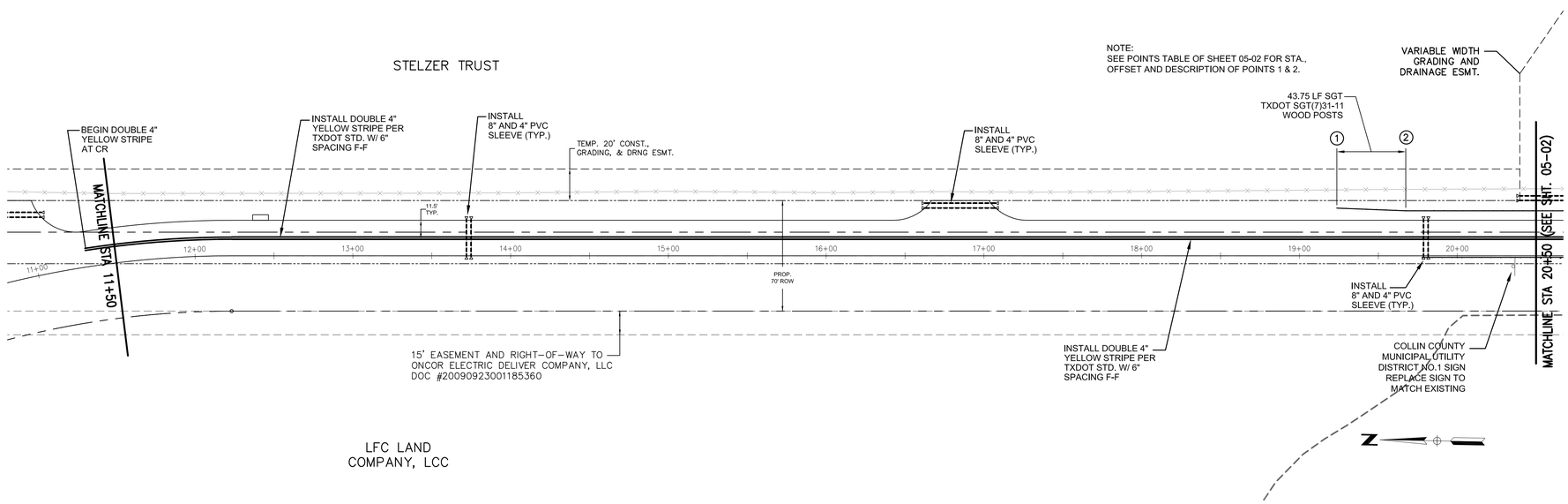

0' 20' 40' 60' 80'
SCALE: 1"=40'

BASIS OF VERTICAL DATUM - NAVD 1988 based on National Geodetic Survey Benchmarks N-185 (Elevation 650.78') and H263 (Elevation - 643.81')

BENCHMARKS:

BM # 79 - Brass monument set on top of curb, southeast side of Light Farms Way, 520+- feet southwesterly from the centerline of Wildrye Ridge.
Elev. = 635.51'

BM # 80 - Brass monument set on curb inlet, southeast side of Light Farms Way, 79+- feet northeasterly from the centerline of Wildrye Ridge.
Elev. = 633.47'

STATE OF TEXAS
ROBERT M. STENGELE
50145
REGISTERED PROFESSIONAL ENGINEER
11-5-14
Date: 11-05-2014
Huitt-Zollars, Inc.
Firm Registration No. F-761

RECORD DRAWING

THIS RECORD DOCUMENT HAS BEEN PREPARED BASED IN PART UPON INFORMATION FURNISED BY OTHERS. THE DESIGN PROFESSIONAL CANNOT ASSURE THE ACCURACY OF OTHERS' INFORMATION AND THUS IS NOT RESPONSIBLE FOR THE ACCURACY OF THIS RECORD DOCUMENT OR FOR ANY ERROR OR OMISSION THAT MAY HAVE BEEN INCORPORATED INTO IT AS A RESULT. THOSE RELYING ON THIS RECORD DOCUMENT ARE ADVIDED TO OBTAIN INDEPENDENT VERIFICATION OF ITS ACCURACY BEFORE APPLYING IT FOR ANT PURPOSE.

Blade #1 36x9.5" 2-Sided Sign Blade					Blade #2 36x9.5" 2-Sided Sign Blade			
Sign Key	Block No. (East)	Name	Suffix	Block No. (West)	Block No. (North))	Name	Suffix	Block No. (South)
A	XXXX	LIGHT FARMS	WAY	XXXX	XXXX	PRAIRIE	CROSSING	XXXX
B	XXXX	FRONTIER	PKWY	XXXX	XXXX	PRAIRIE	CROSSING	XXXX

NOTE: REFER TO SHEET 05-02 FOR SLEEVING DETAIL

LIGHT FARMS

STRIPING & SIGNAGE PLAN

PRAIRIE CROSSING
(EX. COUNTY ROAD 51)

COLLIN COUNTY MUNICIPAL UTILITY DISTRICT NO.1

LFC LAND COMPANY, LLC
8401 North Central Expressway, Suite 350, Dallas, Texas 75225
Phone (214) 292-3410 Fax (214) 292-3411

HUITT-ZOLLARS
Huitt-Zollars, Inc. Dallas
1717 McKinney Avenue, Suite 1400
Dallas, Texas 75202-1236
Phone (214) 871-3311 Fax (214) 871-0757

SCALE AS SHOWN
DATE 7/30/2014
SHEET No. 05-01

PROJECT NUMBER: 01-3905-30

DWG: I:\proj\01\3905\01\1390530 - CR51\DWG\RECORD DRAWINGS 11-7-14\05-01 STRIPING & SIGNAGE PLAN.dwg USER: jcooper
DATE: Nov 05, 2014 3:16pm XREFS: GBS LF-MASTER-BASE BASE-CR51 CR 51 TOPO Sleeve Locations and Sizes for CR 51

CAD FILE PATH: I:\proj\01\3905\01\1390530 - cr51\dwg\record drawings 11-7-14\05-01 striping & signage plan.dwg

P-201312-01

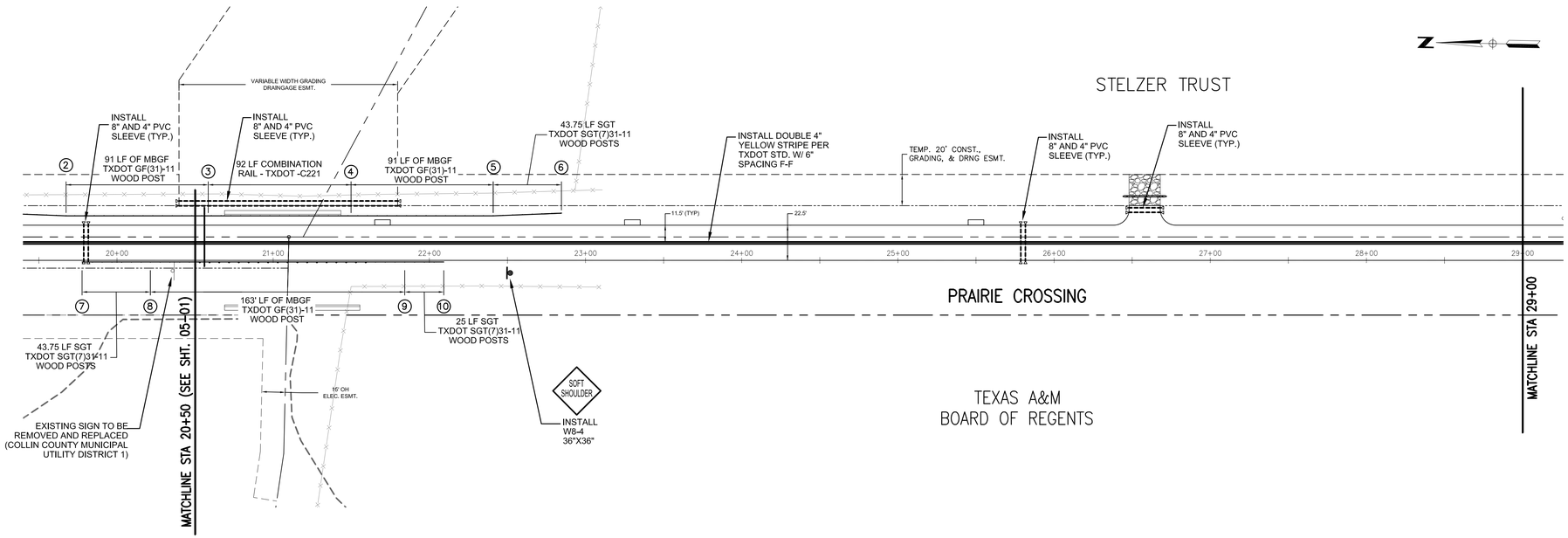

POINT TABLE			
POINT NO.	STATION	OFFSET	DESCRIPTION
1	19+23.69	30.20 (LT)	BEGIN SGT-WOOD POSTS
2	19+67.60	28.50 (LT)	TRANSITION TO MBGF-WOOD POSTS
3	20+58.40	28.50 (LT)	BEGIN COMBINATION RAIL
4	21+50.00	28.50 (LT)	TRANSITION TO MBGF-WOOD POSTS
5	22+41.00	28.50 (LT)	TRANSITION TO SGT-WOOD POSTS
6	22+84.75	30.20 (LT)	END SGT-WOOD POSTS
7	19+77.62	1.00 (RT)	BEGIN SGT-WOOD POSTS
8	20+21.37	1.00 (RT)	TRANSITION TO MBGF-WOOD POSTS
9	21+84.37	1.00 (RT)	TRANSITION TO SGT-WOOD POSTS
10	22+08.87	1.00 (RT)	END SGT-WOOD POSTS

0' 20' 40' 60' 80'
SCALE: 1"=40'

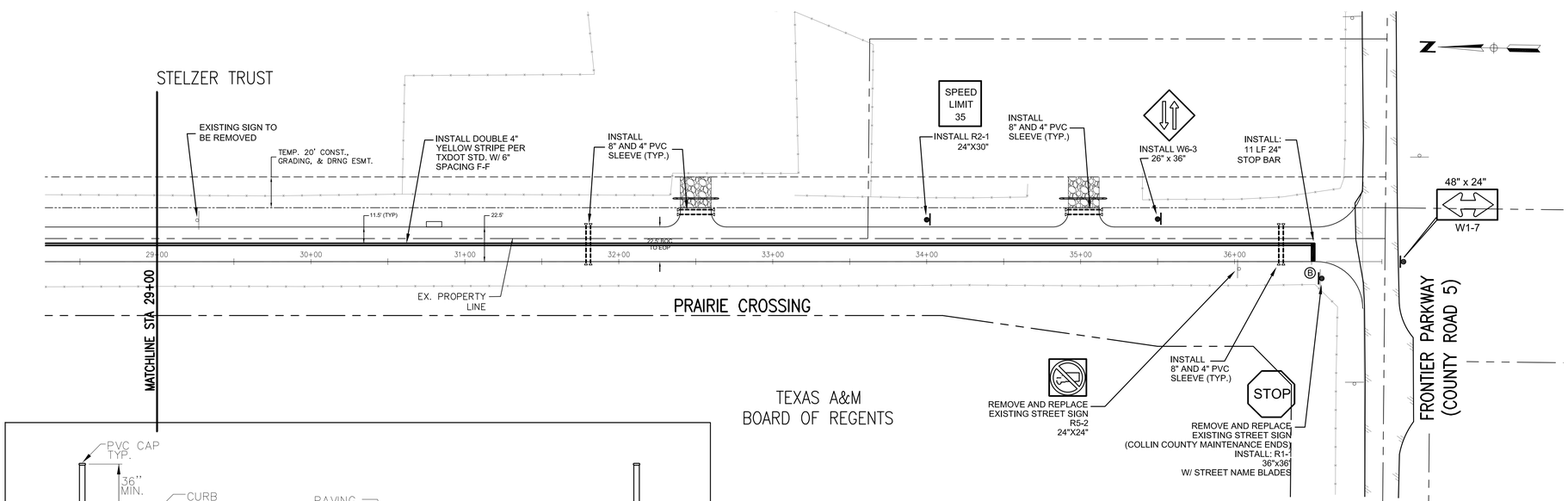

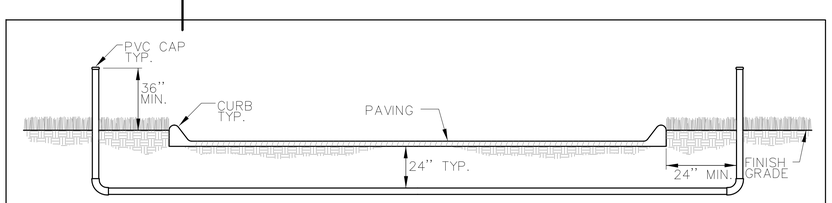

NOTES:
1. ALL PVC PIPE TO BE CLASS 200.
2. ALL JOINTS TO BE SOLVENT WELDED AND WATER TIGHT.
3. MECHANICAL TAMP TO 95% PROCTOR.
4. MIN. CLEARANCE BETWEEN UTILITIES SHALL BE 6".
5. ALL SLEEVING TO BE SIZED AS NOTED (LANDSCAPE-IRRIG.)

SLEEVING DETAIL

BASIS OF VERTICAL DATUM - NAVD 1988 based on National Geodetic Survey Benchmarks N-185 (Elevation 650.78') and H263 (Elevation - 643.81')

BENCHMARKS:

BM # 79 - Brass monument set on top of curb, southeast side of Light Farms Way, 520+- feet southwesterly from the centerline of Wildrye Ridge.
Elev. = 635.51'

BM # 80 - Brass monument set on curb inlet, southeast side of Light Farms Way, 79+- feet northeasterly from the centerline of Wildrye Ridge.
Elev. = 633.47'

STATE OF TEXAS
ROBERT M. STENGELE
50145
REGISTERED
PROFESSIONAL ENGINEER
11-5-14
Date: 11-05-2014

Hulitt-Zollars, Inc.
Firm Registration No. F-761

RECORD DRAWING

THIS RECORD DOCUMENT HAS BEEN PREPARED BASED IN PART UPON INFORMATION FURNISED BY OTHERS. THE DESIGN PROFESSIONAL CANNOT ASSURE THE ACCURACY OF OTHERS' INFORMATION AND THUS IS NOT RESPONSIBLE FOR THE ACCURACY OF THIS RECORD DOCUMENT OR FOR ANY ERROR OR OMISSION THAT MAY HAVE BEEN INCORPORATED INTO IT AS A RESULT. THOSE RELYING ON THIS RECORD DOCUMENT ARE ADVIDED TO OBTAIN INDEPENDENT VERIFICATION OF ITS ACCURACY BEFORE APPLYING IT FOR ANT PURPOSE.

LIGHT FARMS

STRIPING & SIGNAGE PLAN

PRAIRIE CROSSING
(EX. COUNTY ROAD 51)
COLLIN COUNTY MUNICIPAL UTILITY DISTRICT NO.1

LFC LAND COMPANY, LLC
8401 North Central Expressway, Suite 350, Dallas, Texas 75225
Phone (214) 292-3410 Fax (214) 292-3411

HULITT-ZOLLARS
Hulitt-Zollars, Inc. Dallas
1717 McKinney Avenue, Suite 1400
Dallas, Texas 75202-1236
Phone (214) 871-3311 Fax (214) 871-0757

SCALE	SHEET No.
AS SHOWN	05-02
DATE 7/30/2014	

PROJECT NUMBER: 01-3905-30

DWG: I:\proj\013905\01\01390530 - CR51\DWG\RECORD DRAWINGS 11-7-14\05-01 STRIPING & SIGNAGE PLAN.dwg USER: jcooper
DATE: Nov 05, 2014 3:17pm XREFS: GBS LF-MASTER-BASE BASE-CR51 CR 51 TOPO Sleeve Locations and sizes for CR 51

CAD FILE PATH: I:\proj\013905\01\01390530 - cr51\dwg\record drawings 11-7-14\05-01 striping & signage plan.dwg

P-201312-01

DESIGN FLOW (Q_R) BY RATIONAL METHOD						
LOCATION, AREA DESIGNATION	TIME OF CONCENTRATION, T_C (MIN.)	INTENSITY "I_{100}" (in/hr)	DRAINAGE AREA "A" (AC)	RUNOFF COEFFICIENT "C"	FREQUENCY (YRS.)	DESIGN FLOW "Q_{100}"= C*I*A (CFS)
1	2	3	4	5		6
E1.1	15	7.52	0.45	0.60	100	2.0
E1.2	15	7.52	0.82	0.60	100	3.7
E1.3	15	7.52	0.78	0.60	100	3.5
E1.4	15	7.52	1.27	0.60	100	5.7
OS1	15	7.52	20.34	0.60	100	91.8
OS6	15	7.52	2.81	0.60	100	12.7
OS7	15	7.52	3.19	0.60	100	14.4
C1	15	7.52	0.13	0.60	100	0.6
C2	15	7.52	0.13	0.60	100	0.6
C3	15	7.52	0.26	0.60	100	1.2
C4	15	7.52	0.32	0.60	100	1.4
C5	15	7.52	0.63	0.60	100	2.8
C6	15	7.52	0.78	0.60	100	3.5
C7	15	7.52	0.87	0.60	100	3.9
C8	15	7.52	0.97	0.60	100	4.4
D1	15	7.52	0.69	0.60	100	3.1
D2	15	7.52	0.97	0.60	100	4.4

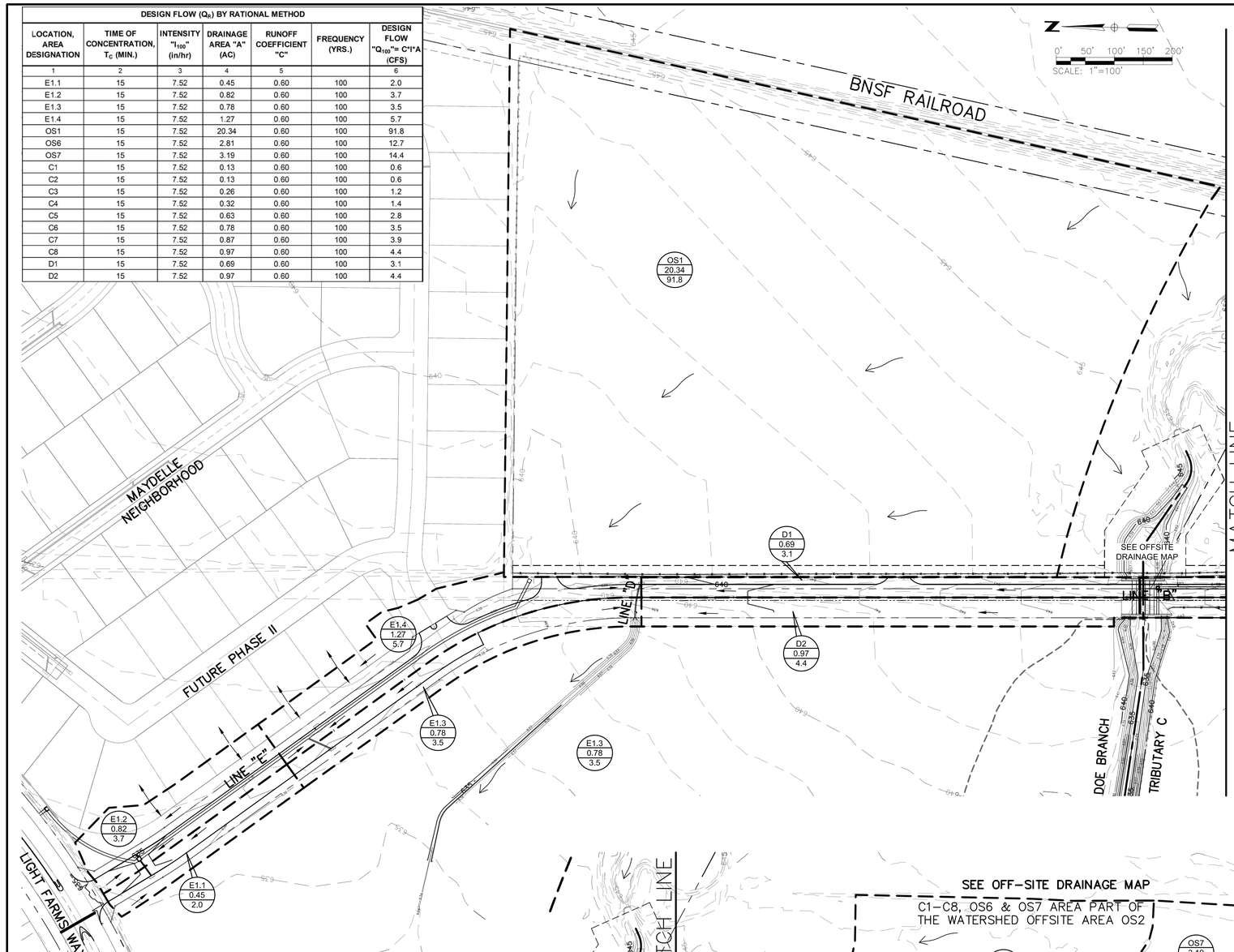

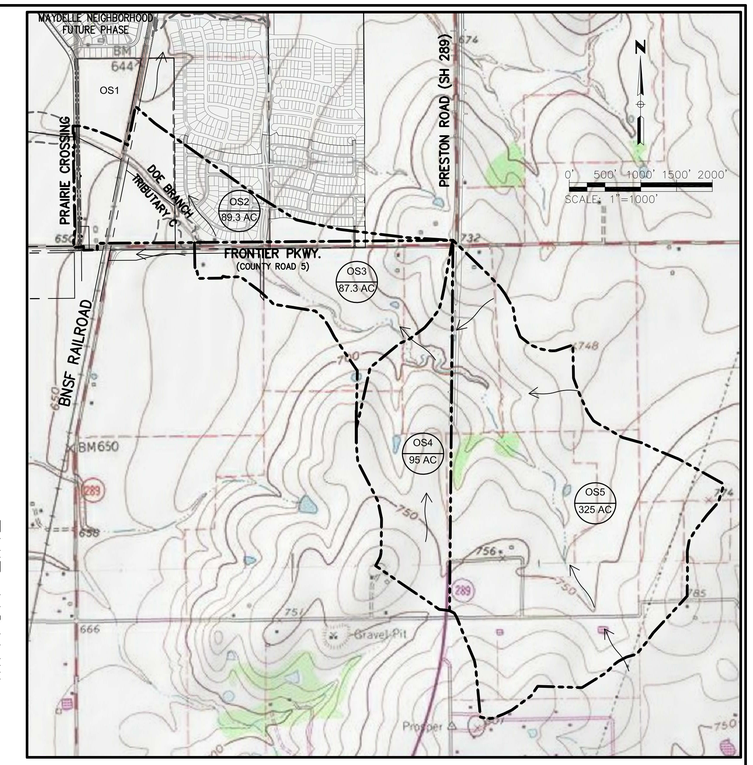

OFF-SITE DRAINAGE MAP
1"=1000'

SEE "LIGHT FARMS CR51 DRAINAGE REPORT" BY HUITT-ZOLLARS, DATED SEPTEMBER 2013.
AT CULVERT:
Qex. = 263cfs (W/ EX. UPSTREAM RESTRICTIONS)
Qult. = 2,227cfs (FULLY DEVELOPED)

STATE OF TEXAS
ROBERT M. STENGELE
50145
REGISTERED PROFESSIONAL ENGINEER
11-5-14
Date: 11-05-2014

Huitt-Zollars, Inc.
Firm Registration No. F-761

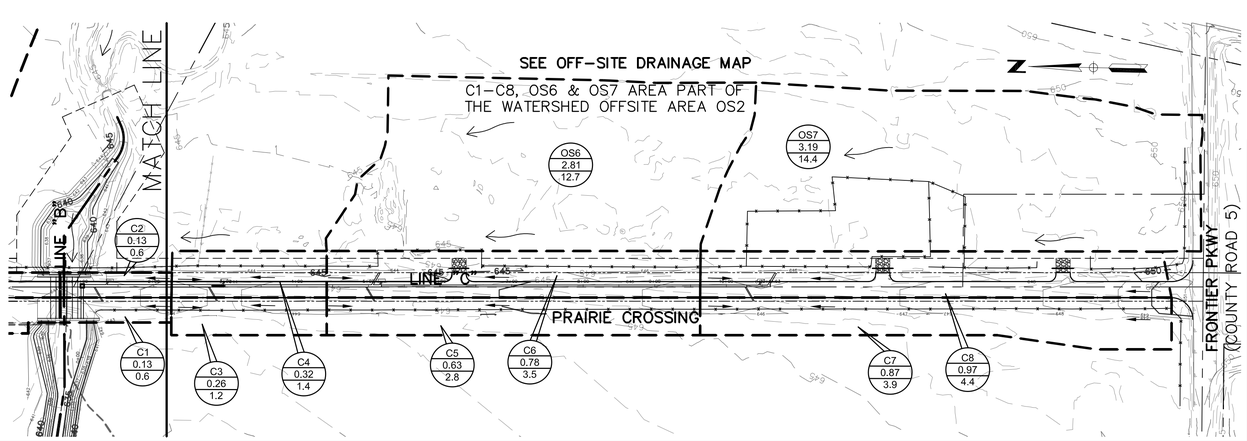

LEGEND

- XX / X.XX / X.X — DRAINAGE AREA NAME; AREA (ACRES); RUNOFF (cfs)
- DRAINAGE AREA BOUNDARY
- OFF-SITE DRAINAGE AREA BOUNDARY
- PROP. DIRECTIONAL FLOW
- EX. DIRECTIONAL FLOW

RECORD DRAWING

THIS RECORD DOCUMENT HAS BEEN PREPARED BASED IN PART UPON INFORMATION FURNISED BY OTHERS. THE DESIGN PROFESSIONAL CANNOT ASSURE THE ACCURACY OF OTHERS' INFORMATION AND THUS IS NOT RESPONSIBLE FOR THE ACCURACY OF THIS RECORD DOCUMENT OR FOR ANY ERROR OR OMISSION THAT MAY HAVE BEEN INCORPORATED INTO IT AS A RESULT. THOSE RELYING ON THIS RECORD DOCUMENT ARE ADVIDED TO OBTAIN INDEPENDENT VERIFICATION OF ITS ACCURACY BEFORE APPLYING IT FOR ANT PURPOSE.

LIGHT FARMS

AREA DRAINAGE MAP

PRAIRIE CROSSING
(EX. COUNTY ROAD 51)

COLLIN COUNTY MUNICIPAL UTILITY DISTRICT NO.1

LFC LAND COMPANY, LLC
8401 North Central Expressway, Suite 350, Dallas, Texas 75225
Phone (214) 292-3410 Fax (214) 292-3411

HUITT-ZOLLARS
Huitt-Zollars, Inc. Dallas
1717 McKinney Avenue, Suite 1400
Dallas, Texas 75202-1236
Phone (214) 871-3311 Fax (214) 871-0757

SCALE	SHEET No.
SEE SCALES	06-01
DATE 7/30/2014	

PROJECT NUMBER: 01-3905-30

DWG: I:\proj\01\3905\01\01390530 - CR51\DWG\RECORD DRAWINGS 11-7-14\06-01 AREA DRAINAGE MAP.dwg USER: jcooper
DATE: Nov 05, 2014 3:19pm XREFS: GBS BASE-CR51 BASE PROF-ROAD EX-CONTOURS LF-MASTER-BASE SURFACE - GIS BASE - IMAGE

CAD FILE PATH: I:\proj\01\3905\01\01390530 - cr51\dwg\record drawings 11-7-14\06-01 area drainage map.dwg

P-201312-01

INLET		DESIGN STORM FREQUENCY (yr)	AREA RUNOFF Q=CIA					CARRY-OVER FROM UPSTREAM INLET (cfs)	TOTAL GUTTER FLOW (cfs)	GUTTER CAPACITY (cfs)	GUTTER SLOPE (ft/100 ft)	CROWN TYPE	SELECTED INLET		INLET CPACITY (cfs)	CARRY-OVER TO DOWNSTREAM INLET (cfs)
NO.	LOCATION (PAVING STATION)		TIME OF CONC. (min)	INTENSITY I (in/hr)	RUNOFF COEFF. "C"	AREA (ac)	"Q" (cfs)						LENGTH "Li" (feet)	TYPE		
1	2	3	4	5	6	7	8	9	10	11	12	13	14	15	16	
E1.1	2+50.00 CR 51	100	15	7.52	0.60	0.45	2.0	0.0	1.4	13.0	0.5	STRAIGHT CROWN	10	SAG	10.9	0.0
E1.2	2+50.00 CR 51	100	15	7.52	0.60	0.82	3.7	0.0	2.5	13.0	0.5	STRAIGHT CROWN	10	SAG	10.9	0.0
E1.3	6+30.00 CR 51	100	15	7.52	0.60	0.78	3.5	0.0	2.3	13.0	0.5	STRAIGHT CROWN	10	SAG	10.9	0.0
E1.4	6+30.00 CR 51	100	15	7.52	0.60	1.27	5.7	0.0	3.8	13.0	0.5	STRAIGHT CROWN	10	SAG	10.9	0.0
C1	21+70.00 CR 51	100	15	7.52	0.60	0.13	0.6	0.0	0.4	13.0	0.5	STRAIGHT CROWN	10	SAG	10.9	0.0
C2	21+70.00 CR 51	100	15	7.52	0.60	0.13	0.6	0.0	0.4	13.0	0.5	STRAIGHT CROWN	10	SAG	10.9	0.0
C3	23+30.00 CR 51	100	15	7.52	0.60	0.26	1.2	0.0	0.8	13.0	0.5	STRAIGHT CROWN	10	SAG	10.9	0.0
C4	23+30.00 CR 51	100	15	7.52	0.60	0.32	1.4	0.0	1.0	13.0	0.5	STRAIGHT CROWN	10	SAG	10.9	0.0
C5	25+50.00 CR 51	100	15	7.52	0.60	0.63	2.8	0.0	1.9	13.0	0.5	STRAIGHT CROWN	10	SAG	10.9	0.0
C6	25+50.00 CR 51	100	15	7.52	0.60	0.78	3.5	0.0	2.3	13.0	0.5	STRAIGHT CROWN	10	SAG	10.9	0.0
C7	30+80.00 CR 51	100	15	7.52	0.60	0.87	3.9	0.0	2.6	13.0	0.5	STRAIGHT CROWN	10	SAG	10.9	0.0
C8	30+80.00 CR 51	100	15	7.52	0.60	0.97	4.4	0.0	2.9	13.0	0.5	STRAIGHT CROWN	10	SAG	10.9	0.0
D1	12+41.46 CR 51	100	15	7.52	0.60	0.69	3.1	0.0	3.1	13.0	0.5	STRAIGHT CROWN	10	ON GRADE	10.9	0.0
D2	12+41.46 CR 51	100	15	7.52	0.60	0.97	4.4	0.0	4.4	13.0	0.5	STRAIGHT CROWN	10	ON GRADE	10.9	0.0

CULVERT DATA TABLE

LOCATION	PROPOSED ROADWAY AND STRUCTURE					EXISTING ROADWAY AND STRUCTURE				
	RIVER STA.	50 YEAR FREQUENCY		100 YEAR FREQUENCY		RIVER STA.	50 YEAR FREQUENCY		100 YEAR FREQUENCY	
		CHANNEL VEL (FT/S)	WSEL (FT)	CHANNEL VEL (FT/S)	WSEL (FT)		CHANNEL VEL (FT/S)	WSEL (FT)	CHANNEL VEL (FT/S)	WSEL (FT)
XS 5582 (BEGIN CONTRACTION)	5582	3.06	639.82	3.1	639.78	5582	4.04	644.84	4.19	644.83
XS 5546 (US OF BRIDGE)	5546	2.54	639.75	2.58	639.81	5546	0.75	644.71	0.76	644.73
XS 5346 (DS OF BRIDGE)	5346	2.82	639.62	2.86	639.68	5346	2.68	642.81	2.7	642.84
XS 5145 (END EXPANSION)	5145	3.58	639.51	3.62	639.57	5145	1.22	640.83	1.23	640.84
DESIGN DISCHARGE	532			546		256			263	
LOWEST ROADWAY ELEVATION AT CROSSING	644					644.52				

NOTE: DISCHARGES REFLECTS EXISTING UPSTREAM DIVERSIONS

Pipe "n": 0.013

RUNOFF COLLECTION POINT (Inlet or Manhole)		Distance Between Collection Points (ft)	INCREMENTAL DRAINAGE AREA				Accumulated "CA"	Time at Upstream Station (minutes)	Design Storm Frequency (yrs)	Intensity "I" (inches/hr)	Storm Water Runoff "Q" (c.f.s.)	Slope of Hydraulic Gradient "S" (ft./ft.)	Selected Storm Sewer Size	Velocity in Sewer Between Collection Points "V" (f.p.s.)	Friction Head Loss Coeff. K_j per City of Celina Storm Manual	K_j, city of Celina Storm Manual	Velocity Head Loss of Upstream Station (feet)	Flow Time in Sewer Distance/V*60 (minutes)	Time of Downstream Station (minutes)	Remarks
Upstream Station	Downstream Station		Area No.	Drainage Area "A" (Acres)	Runoff Coeff. "C"	Incremental "CA"														
1	2	3	4	5	6	7	8	9	10	11	12	13	14	15	16		17	18	19	20
LINE 'E1'																				
18+49.00	18+01.00	48	OS1	20.34	0.60	12.20	12.20	15.00	100	7.52	91.8	0.0022	54	7.61	0.10	1.50	0.90	0.11	15.11	PARTIAL FLOW
18+01.00	13+93.00	408		0.00	0.60	0.00	12.20	15.00	100	7.52	91.8	0.0022	54	5.77	0.89	0.50	0.52	0.00	15.11	PARTIAL FLOW
13+93.00	13+75.00	18	E1.4	1.27	0.60	0.76	12.97	15.00	100	7.52	97.5	0.0025	54	6.13	0.04	0.40	0.58	0.05	15.15	PARTIAL FLOW
13+75.00	10+17.00	358	E1.3	0.78	0.60	0.47	13.43	15.00	100	7.52	101.0	0.0026	54	6.35	0.94	0.40	0.63	0.94	16.09	PARTIAL FLOW
10+17.00	10+08.00	9	E1.1 & E1.2	1.27	0.60	0.76	14.20	15.00	100	7.52	106.8	0.0029	54	6.71	0.03	0.25	0.70	0.02	16.12	PARTIAL FLOW
10+08.00	8+26.00	182		0.00	0.60	0.00	14.20	15.00	100	7.52	106.8	0.0029	54	6.71	0.54	0.50	0.70	0.00	16.12	PARTIAL FLOW
8+26.00	8+10.50	15.5		0.00	0.60	0.00	14.20	15.00	100	7.52	106.8	0.0029	54	6.71	0.05	1.00	0.70	0.00	16.12	PARTIAL FLOW
LINE 'C'																				
10+80.00	10+77.00	3		0.00	0.60	0.00	0.00	15.00	100	7.52	0.0	0.0000	27	0.00	0.00	0.00	0.00	0.00	15.00	PARTIAL FLOW
10+77.00	10+63.50	13.5	OS7	3.19	0.60	1.91	1.91	15.00	100	7.52	14.4	0.0022	27	3.62	0.03	0.60	0.20	0.06	15.06	PARTIAL FLOW
10+63.50	10+47.00	16.5	C8	0.97	0.60	0.58	2.50	15.00	100	7.52	18.8	0.0037	27	4.72	0.06	0.50	0.35	0.06	15.12	PARTIAL FLOW
10+47.00	10+44.00	3			0.60	0.00	2.50	15.00	100	7.52	18.8	0.0021	30	3.82	0.01	0.40	0.23	0.00	15.12	PARTIAL FLOW
10+44.00	5+36.50	507.5	C7	0.87	0.60	0.52	3.02	15.00	100	7.52	22.7	0.0031	30	4.62	1.55	0.50	0.33	1.83	16.95	PARTIAL FLOW
5+36.50	5+33.50	3			0.60	0.00	3.02	15.00	100	7.52	22.7	0.0012	36	3.21	0.00	0.80	0.16	0.00	16.95	PARTIAL FLOW
5+33.50	5+23.00	10.5	C6	0.78	0.60	0.47	3.49	15.00	100	7.52	26.2	0.0015	36	3.71	0.02	0.40	0.21	0.05	17.00	PARTIAL FLOW
5+23.00	5+14.50	8.5	OS6	2.81	0.60	1.69	5.17	15.00	100	7.52	38.9	0.0034	36	5.50	0.03	0.50	0.47	0.03	17.02	PARTIAL FLOW
5+14.50	3+16.50	198	C5	0.63	0.60	0.38	5.55	15.00	100	7.52	41.7	0.0039	36	5.90	0.78	0.40	0.54	0.56	17.58	PARTIAL FLOW
3+16.50	3+13.50	3			0.60	0.00	5.55	15.00	100	7.52	41.7	0.0017	42	4.34	0.01	0.60	0.29	0.00	17.58	PARTIAL FLOW
3+13.50	2+94.50	19	C4	0.32	0.60	0.19	5.74	15.00	100	7.52	43.2	0.0018	42	4.49	0.03	0.40	0.31	0.07	17.65	PARTIAL FLOW
2+94.50	1+54.50	140	C3	0.26	0.60	0.16	5.90	15.00	100	7.52	44.4	0.0019	42	4.61	0.27	0.40	0.33	0.51	18.16	PARTIAL FLOW
1+54.50	1+12.00	42.5	C1 & C2	0.26	0.60	0.16	6.05	15.00	100	7.52	45.5	0.0020	42	4.73	0.09	0.20	0.35	0.15	18.31	PARTIAL FLOW
1+12.00	0+57.00	55			0.60	0.00	6.05	15.00	100	7.52	45.5	0.0020	42	4.73	0.11	0.50	0.35	0.00	18.31	PARTIAL FLOW
0+57.00	0+50.00	7			0.60	0.00	6.05	15.00	100	7.52	45.5	0.0020	42	4.73	0.01	0.50	0.35	0.00	18.31	
0+50.00	0+00.00	50			0.60	0.00	6.05	15.00	100	7.52	45.5	0.0020	42	4.73	0.10	1.00	0.35	0.00	18.31	
LINE 'D'																				
1+58.34	1+11.00	47.34	D2	0.97	0.60	0.58	0.58	15.00	100	7.52	4.4	0.0017	18	2.48	0.08	1.50	0.10	0.32	15.32	PARTIAL FLOW
1+11.00	1+08.00	3		0.00	0.60	0.00	0.58	15.00	100	7.52	4.4	0.0008	21	1.82	0.00	0.60	0.05	0.00	15.00	PARTIAL FLOW
1+08.00	1+00.00	8	D1	0.69	0.60	0.41	1.00	15.00	100	7.52	7.5	0.0022	21	3.11	0.02	0.60	0.15	0.04	15.04	PARTIAL FLOW
LAT 'E1.1'																				
0+40.47	0+00.00	40.47	E1.1	0.45	0.60	0.27	0.27	15.00	100	7.52	2.0	0.0004	18	1.15	0.02	1.50	0.02	0.59	15.59	
LAT 'E1.2'																				
0+06.93	0+00.00	6.93	E1.2	0.82	0.60	0.49	0.49	15.00	100	7.52	3.7	0.0012	18	2.09	0.01	1.50	0.07	0.06	15.06	
LAT 'E1.3'																				
0+45.03	0+00.00	45.03	E1.3	0.78	0.60	0.47	0.47	15.00	100	7.52	3.5	0.0011	18	1.99	0.05	1.50	0.06	0.38	15.38	
LAT 'E1.4'																				
0+06.93	0+00.00	6.93	E1.4	1.27	0.60	0.76	0.76	15.00	100	7.52	5.7	0.0030	18	3.24	0.02	1.50	0.16	0.04	15.04	
LAT 'C1'																				
0+17.32	0+00.00	17.32	C1	0.13	0.60	0.08	0.08	15.00	100	7.52	0.6	0.0000	18	0.33	0.00	1.50	0.00	0.87	15.87	
LAT 'C2'																				
0+06.93	0+00.00	6.93	C2	0.13	0.60	0.08	0.08	15.00	100	7.52	0.6	0.0000	18	0.33	0.00	1.50	0.00	0.35	15.35	
LAT 'C3'																				
0+45.03	0+00.00	45.03	C3	0.26	0.60	0.16	0.16	15.00	100	7.52	1.2	0.0001	18	0.66	0.01	1.50	0.01	1.13	16.13	
LAT 'C4'																				
0+06.93	0+00.00	6.93	C4	0.32	0.60	0.19	0.19	15.00	100	7.52	1.4	0.0002	18	0.82	0.00	1.50	0.01	0.14	15.14	
LAT 'C5'																				
0+45.03	0+00.00	45.03	C5	0.63	0.60	0.38	0.38	15.00	100	7.52	2.8	0.0007	18	1.61	0.03	1.50	0.04	0.47	15.47	
LAT 'C6'																				
0+06.93	0+00.00	6.93	C6	0.78	0.60	0.47	0.47	15.00	100	7.52	3.5	0.0011	18	1.99	0.01	1.50	0.06	0.06	15.06	
LAT 'C7'																				
0+45.03	0+00.00	45.03	C7	0.87	0.60	0.52	0.52	15.00	100	7.52	3.9	0.0014	18	2.22	0.06	1.50	0.08	0.34	15.34	
LAT 'C8'																				
0+06.93	0+00.00	6.93	C8	0.97	0.60	0.58	0.58	15.00	100	7.52	4.4	0.0017	18	2.48	0.01	1.50	0.10	0.05	15.05	
LAT 'OS6'																				
0+21.00	0+00.00	21	OS6	2.81	0.60	1.69	1.69	15.00	100	7.52	12.7	0.0017	27	3.19	0.04	1.50	0.16	0.11	15.11	
LAT 'OS7'																				
0+21.00	0+00.00	21	OS7	3.19	0.60	1.91	1.91	15.00	100	7.52	14.4	0.0022	27	3.62	0.05	1.50	0.20	0.10	15.10	

STATE OF TEXAS
ROBERT M. STENGELE
50145
REGISTERED PROFESSIONAL ENGINEER

11-5-14

Date: 11-05-2014

Huitt-Zollars, Inc.
Firm Registration No. F-761

RECORD DRAWING

THIS RECORD DOCUMENT HAS BEEN PREPARED BASED IN PART UPON INFORMATION FURNISED BY OTHERS. THE DESIGN PROFESSIONAL CANNOT ASSURE THE ACCURACY OF OTHERS' INFORMATION AND THUS IS NOT RESPONSIBLE FOR THE ACCURACY OF THIS RECORD DOCUMENT OR FOR ANY ERROR OR OMISSION THAT MAY HAVE BEEN INCORPORATED INTO IT AS A RESULT. THOSE RELYING ON THIS RECORD DOCUMENT ARE ADVIDED TO OBTAIN INDEPENDENT VERIFICATION OF ITS ACCURACY BEFORE APPLYING IT FOR ANT PURPOSE.

LIGHT FARMS

AREA DRAINAGE CALCULATIONS

PRAIRIE CROSSING
(EX. COUNTY ROAD 51)

COLLIN COUNTY MUNICIPAL UTILITY DISTRICT NO.1

LFC LAND COMPANY, LLC
8401 North Central Expressway, Suite 350, Dallas, Texas 75225
Phone (214) 292-3410 Fax (214) 292-3411

HUITT-ZOLLARS
Huitt-Zollars, Inc. Dallas
1717 McKinney Avenue, Suite 1400
Dallas, Texas 75202-1236
Phone (214) 871-3311 Fax (214) 871-0757

SCALE
DATE 7/30/2014
SHEET No. 06-02

PROJECT NUMBER: 01-3905-30

DWG: I:\proj\013905\01\390530 - CR51\DWG\RECORD DRAWINGS 11-7-14\06-01 AREA DRAINAGE MAP.dwg USER: jcooper
DATE: Nov 05, 2014 3:21pm XREFS: GBS BASE-CR51 BASE PROF-ROAD EX-CONTOURS LF-MASTER-BASE SURFACE - GIS BASE - IMAGE

CAD FILE PATH: I:\proj\013905\01\390530 - cr51\dwg\record drawings 11-7-14\06-01 area drainage map.dwg

P-201312-01

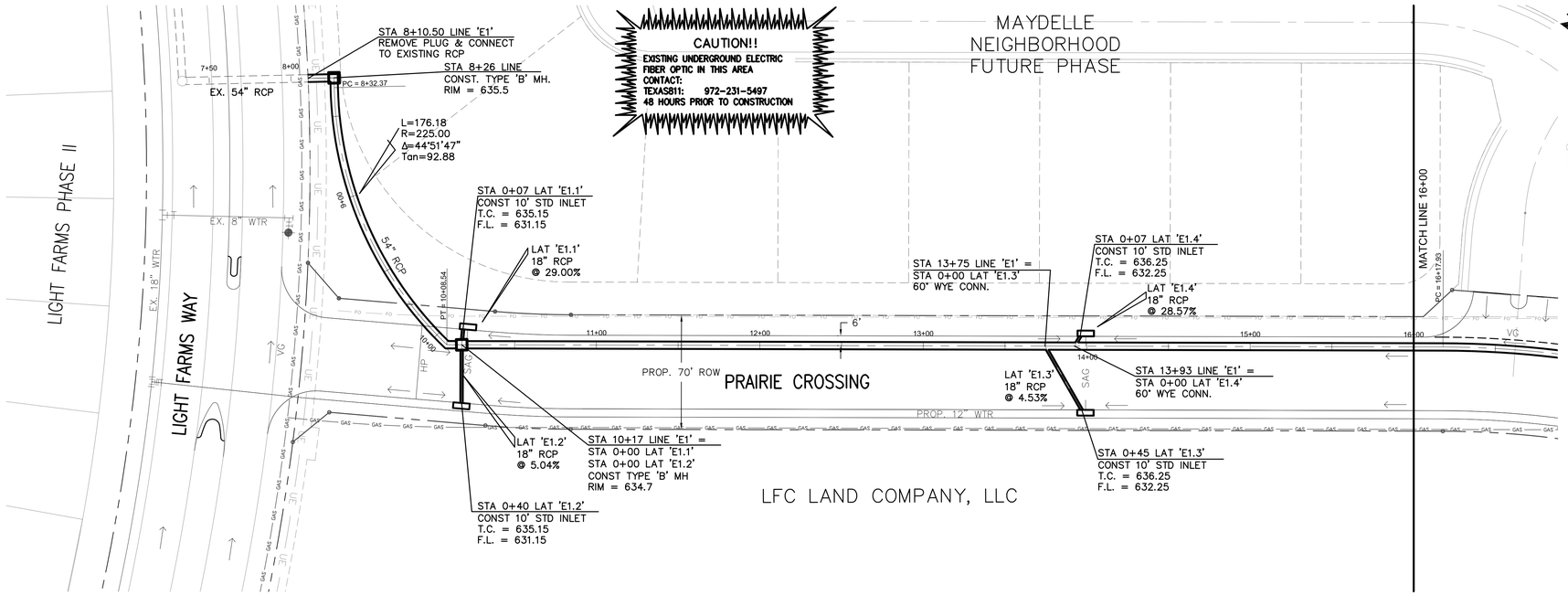

NOTE:
REFER TO SHEETS CS7–CS10 FOR ALL STANDARD CITY STORM DETAILS

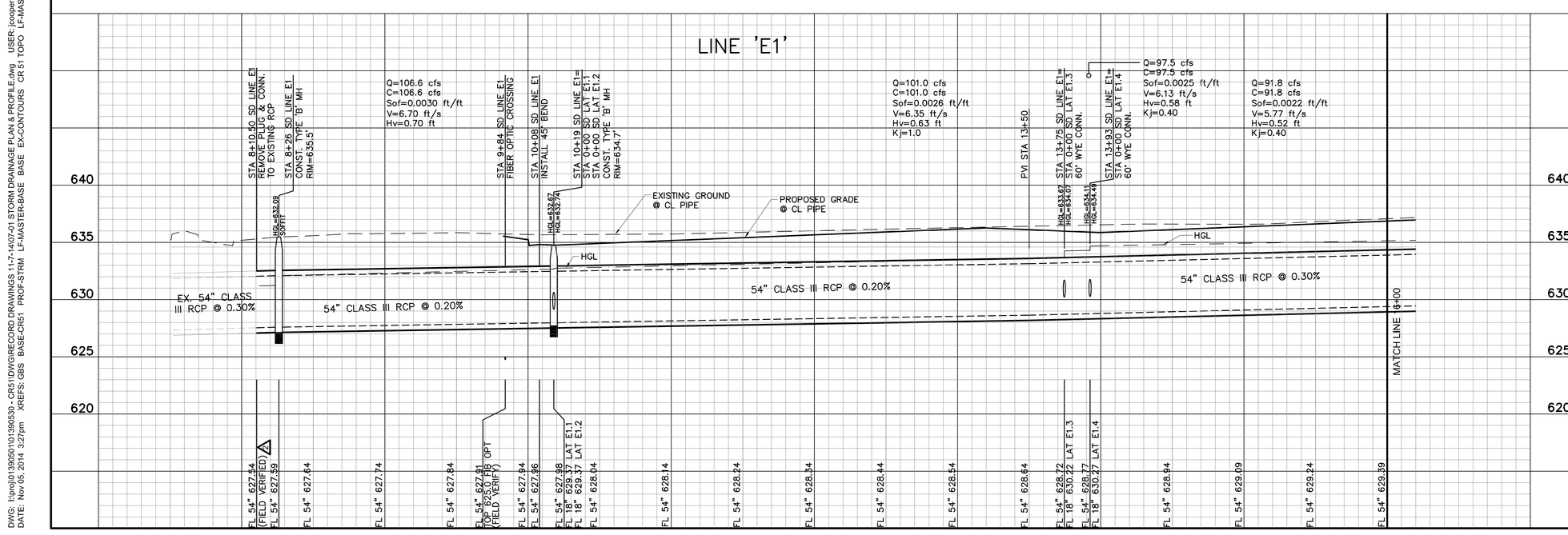

BASIS OF VERTICAL DATUM - NAVD 1988 based on National Geodetic Survey Benchmarks N-185 (Elevation 650.78') and H263 (Elevation - 643.81')

BENCHMARKS:

BM # 79 - Brass monument set on top of curb, southeast side of Light Farms Way, 520+- feet southwesterly from the centerline of Wildrye Ridge.
Elev. = 635.51'

BM # 80 - Brass monument set on curb inlet, southeast side of Light Farms Way, 79+- feet northeasterly from the centerline of Wildrye Ridge.
Elev. = 633.47'

STATE OF TEXAS
ROBERT M. STENGELE
50145
REGISTERED
PROFESSIONAL ENGINEER

11-5-14

Date: 11-05-2014

Huitt-Zollars, Inc.
Firm Registration No. F-761

RECORD DRAWING

THIS RECORD DOCUMENT HAS BEEN PREPARED BASED IN PART UPON INFORMATION FURNISED BY OTHERS. THE DESIGN PROFESSIONAL CANNOT ASSURE THE ACCURACY OF OTHERS' INFORMATION AND THUS IS NOT RESPONSIBLE FOR THE ACCURACY OF THIS RECORD DOCUMENT OR FOR ANY ERROR OR OMISSION THAT MAY HAVE BEEN INCORPORATED INTO IT AS A RESULT. THOSE RELYING ON THIS RECORD DOCUMENT ARE ADVIDED TO OBTAIN INDEPENDENT VERIFICATION OF ITS ACCURACY BEFORE APPLYING IT FOR ANT PURPOSE.

LIGHT FARMS

STORM DRAINAGE PLAN & PROFILE
LINE 'E1'

PRAIRIE CROSSING
(EX. COUNTY ROAD 51)
COLLIN COUNTY MUNICIPAL UTILITY DISTRICT NO.1
LFC LAND COMPANY, LLC
8401 North Central Expressway, Suite 350, Dallas, Texas 75225
Phone (214) 292-3410 Fax (214) 292-3411

HUITT-ZOLLARS
Huitt-Zollars, Inc. Dallas
1717 McKinney Avenue, Suite 1400
Dallas, Texas 75202-1236
Phone (214) 871-3311 Fax (214) 871-0757

SCALE	SHEET No.
AS SHOWN	07-01
DATE 7/30/2014	

PROJECT NUMBER: 01-3905-30

DWG: I:\proj\01\3905\01\01390530 - CR51\DWG\RECORD DRAWINGS 11-7-14\07-01 STORM DRAINAGE PLAN & PROFILE.dwg USER: jcooper
DATE: Nov 05, 2014 3:27pm XREFS: GBS BASE-CR51 PROF-STRM LF-MASTER-BASE BASE EX-CONTOURS CR 51 TOPO LF-MASTER-UTI
CAD FILE PATH: U:\proj\01\3905\01\01390530 - cr51\dwg\record drawings 11-7-14\07-01 storm drainage plan & profile.dwg

P-201312-01

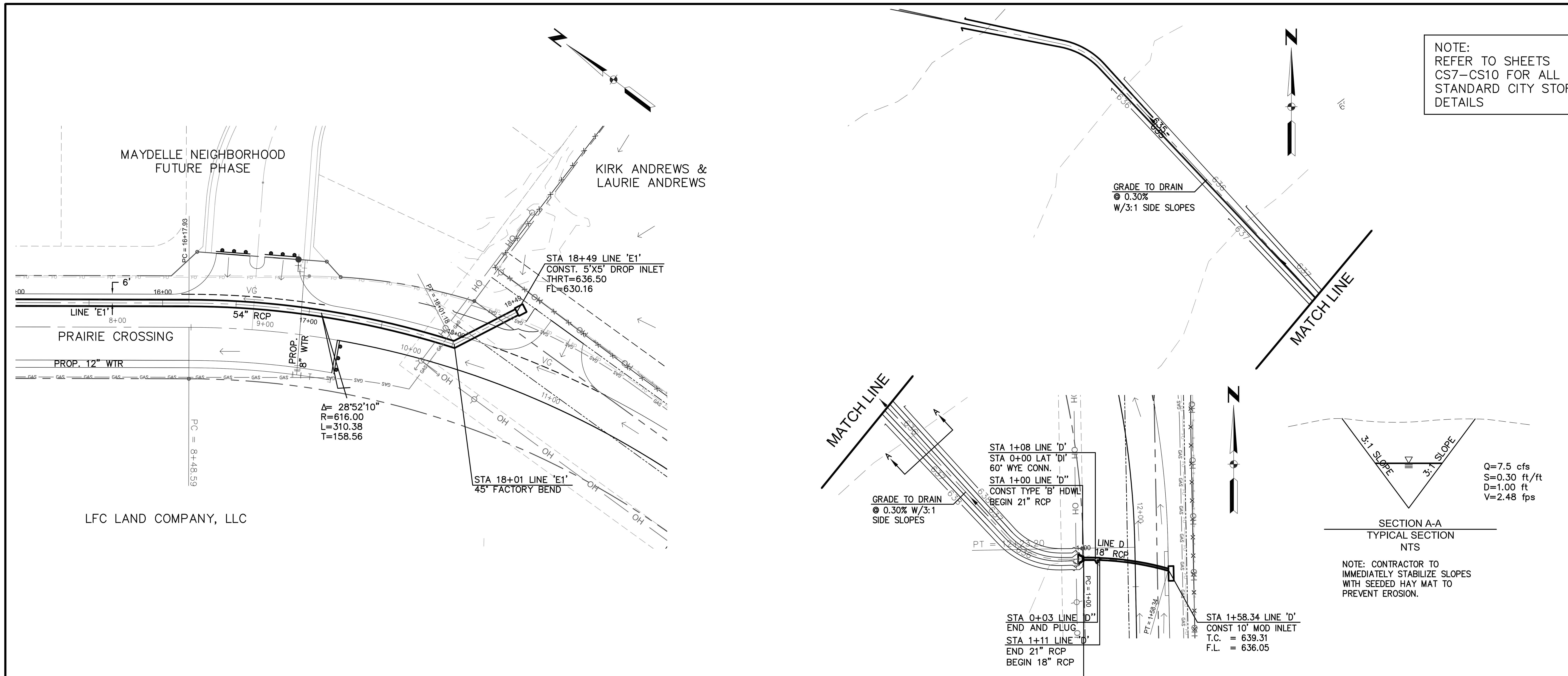

SECTION A-A
TYPICAL SECTION
NTS

NOTE: CONTRACTOR TO IMMEDIATELY STABILIZE SLOPES WITH SEEDED HAY MAT TO PREVENT EROSION.

NOTE:
REFER TO SHEETS CS7–CS10 FOR ALL STANDARD CITY STORM DETAILS

LEGEND

- STORM STORM PIPE
- PROP. CURB INLET
- PROP. STRUCTURE
- PROP. ROCK RIP–RAP
- PROP. CONCRETE APRON
- EX. STORM PIPE
- EX. STRUCTURE
- VALLEY GUTTER
- PROP. DIRECTIONAL FLOW

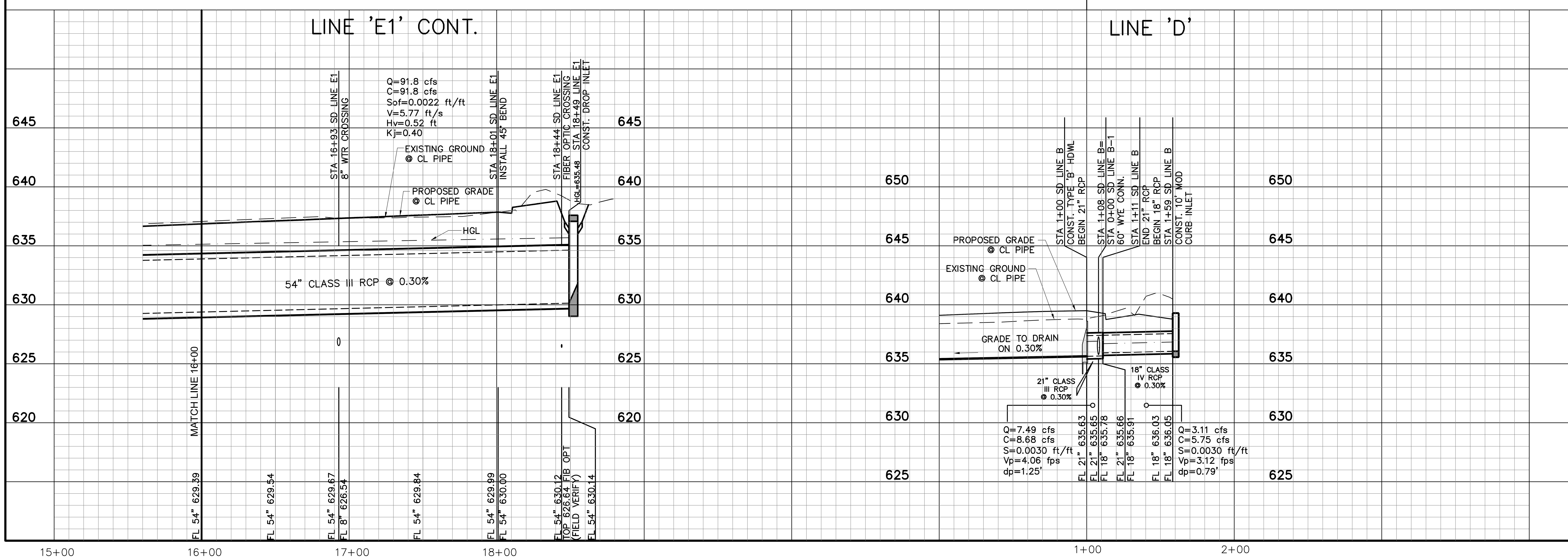

BASIS OF VERTICAL DATUM - NAVD 1988 based on National Geodetic Survey Benchmarks N-185 (Elevation 650.78') and H263 (Elevation - 643.81')

BENCHMARKS:

BM # 79 - Brass monument set on top of curb, southeast side of Light Farms Way, 520+- feet southwesterly from the centerline of Wildrye Ridge.
Elev. = 635.51'

BM # 80 - Brass monument set on curb inlet, southeast side of Light Farms Way, 79+- feet northeasterly from the centerline of Wildrye Ridge.
Elev. = 633.47'

STATE OF TEXAS
ROBERT M. STENGELE
50145
REGISTERED
PROFESSIONAL ENGINEER
11-5-14
Date: 11-05-2014

Huitt-Zollars, Inc.
Firm Registration No. F-761

RECORD DRAWING

THIS RECORD DOCUMENT HAS BEEN PREPARED BASED IN PART UPON INFORMATION FURNISHED BY OTHERS. THE DESIGN PROFESSIONAL CANNOT ASSURE THE ACCURACY OF OTHERS' INFORMATION AND THUS IS NOT RESPONSIBLE FOR THE ACCURACY OF THIS RECORD DOCUMENT OR FOR ANY ERROR OR OMISSION THAT MAY HAVE BEEN INCORPORATED INTO IT AS A RESULT. THOSE RELYING ON THIS RECORD DOCUMENT ARE ADVIDED TO OBTAIN INDEPENDENT VERIFICATION OF ITS ACCURACY BEFORE APPLYING IT FOR ANT PURPOSE.

LIGHT FARMS

STORM DRAINAGE PLAN & PROFILE
LINE 'E1' CONT. & 'D'

PRAIRIE CROSSING
(EX. COUNTY ROAD 51)

COLLIN COUNTY MUNICIPAL UTILITY DISTRICT NO.1

LFC LAND COMPANY, LLC
8401 North Central Expressway, Suite 350, Dallas, Texas 75225
Phone (214) 292-3410 Fax (214) 292-3411

HUITT-ZOLLARS
Huitt-Zollars, Inc. Dallas
1717 McKinney Avenue, Suite 1400
Dallas, Texas 75202-1236
Phone (214) 871-3311 Fax (214) 871-0757

SCALE	SHEET No.
AS SHOWN	07-02
DATE 7/30/2014	

PROJECT NUMBER: 01-3905-30

CAD FILE PATH: i:\proj\01390501\01390530 - cr51\dwg\record drawings 11-7-14\07-01 storm drainage plan & profile.dwg

DWG: I:\proj\01390501\01390530 - CR51\DWG\RECORD DRAWINGS 11-7-14\07-01 STORM DRAINAGE PLAN & PROFILE.dwg USER: jcooper
DATE: Nov 05, 2014 3:28pm XREFS: GBS BASE-CR51 PROF-STRM LF-MASTER-BASE BASE EX-CONTOURS CR 51 TOPO LF-MASTER-UTI

P-201312-01

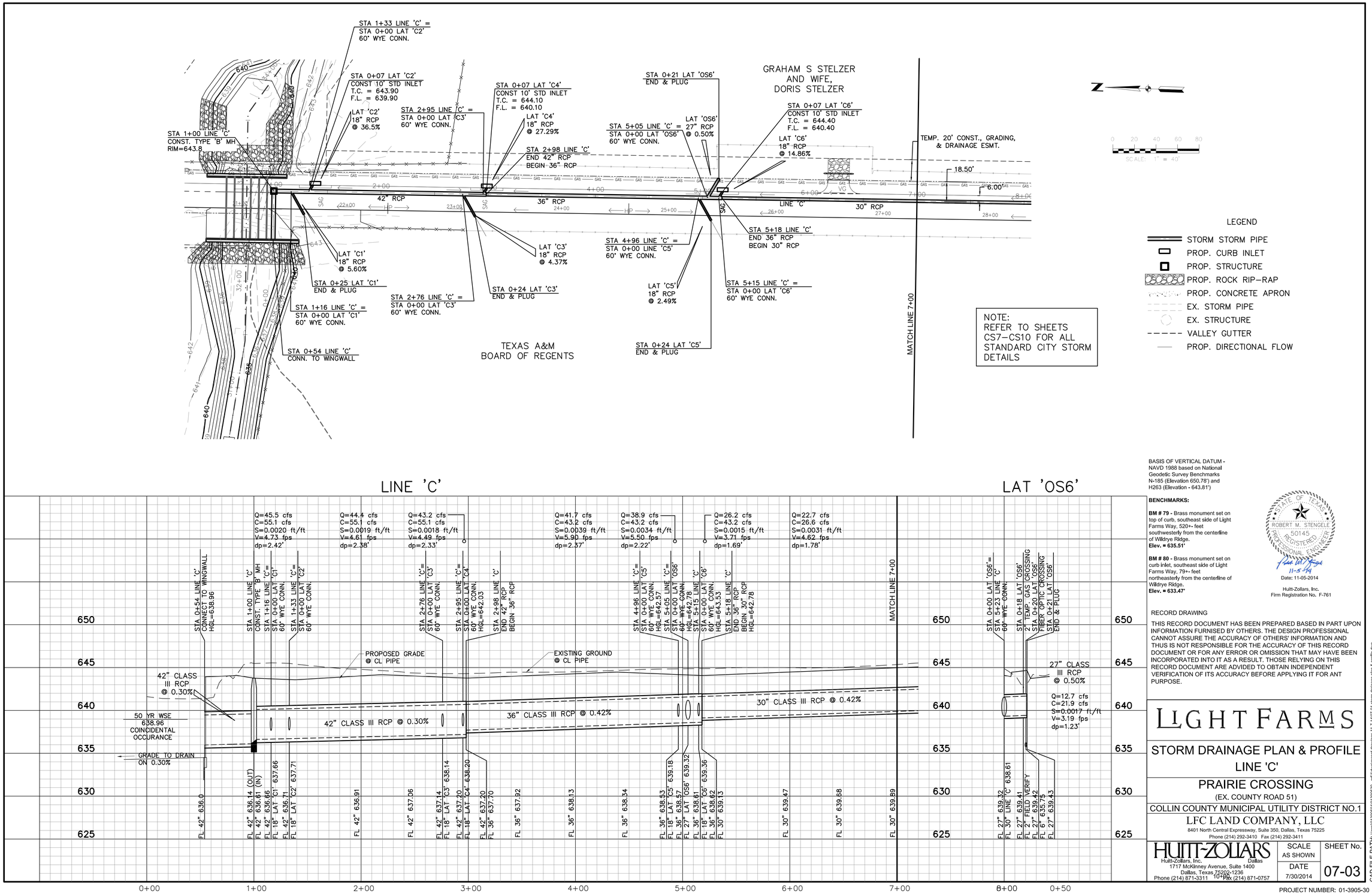

BASIS OF VERTICAL DATUM - NAVD 1988 based on National Geodetic Survey Benchmarks N-185 (Elevation 650.78') and H263 (Elevation - 643.81')

BENCHMARKS:

BM # 79 - Brass monument set on top of curb, southeast side of Light Farms Way, 520+- feet southwesterly from the centerline of Wildrye Ridge.
Elev. = 635.51'

BM # 80 - Brass monument set on curb inlet, southeast side of Light Farms Way, 79+- feet northeasterly from the centerline of Wildrye Ridge.
Elev. = 633.47'

STATE OF TEXAS
ROBERT M. STENGELE
50145
REGISTERED PROFESSIONAL ENGINEER
11-5-14
Date: 11-05-2014

Hultt-Zollars, Inc.
Firm Registration No. F-761

RECORD DRAWING

THIS RECORD DOCUMENT HAS BEEN PREPARED BASED IN PART UPON INFORMATION FURNISED BY OTHERS. THE DESIGN PROFESSIONAL CANNOT ASSURE THE ACCURACY OF OTHERS' INFORMATION AND THUS IS NOT RESPONSIBLE FOR THE ACCURACY OF THIS RECORD DOCUMENT OR FOR ANY ERROR OR OMISSION THAT MAY HAVE BEEN INCORPORATED INTO IT AS A RESULT. THOSE RELYING ON THIS RECORD DOCUMENT ARE ADVIDED TO OBTAIN INDEPENDENT VERIFICATION OF ITS ACCURACY BEFORE APPLYING IT FOR ANT PURPOSE.

LIGHT FARMS

STORM DRAINAGE PLAN & PROFILE
LINE 'C'

PRAIRIE CROSSING
(EX. COUNTY ROAD 51)

COLLIN COUNTY MUNICIPAL UTILITY DISTRICT NO.1

LFC LAND COMPANY, LLC
8401 North Central Expressway, Suite 350, Dallas, Texas 75225
Phone (214) 292-3410 Fax (214) 292-3411

HULTT-ZOLLARS
Hultt-Zollars, Inc. Dallas
1717 McKinney Avenue, Suite 1400
Dallas, Texas 75202-1236
Phone (214) 871-3311 Fax (214) 871-0757

SCALE	SHEET No.
AS SHOWN	07-03
DATE 7/30/2014	

PROJECT NUMBER: 01-3905-30

DWG: I:\proj\013905010130\530 - CR51\DWG\RECORD DRAWINGS 11-7-14\07-01 STORM DRAINAGE PLAN & PROFILE.dwg USER: jcooper
DATE: Nov 05, 2014 3:29pm XREFS: GBS BASE-CR51 PROF-STRM LF-MASTER-BASE BASE EX-CONTOURS CR 51 TOPO LF-MASTER-UTI

CAD FILE PATH: I:\proj\013905010130\530 - cr51\dwg\record drawings 11-7-14\07-01 storm drainage plan & profile.dwg

P-201312-01

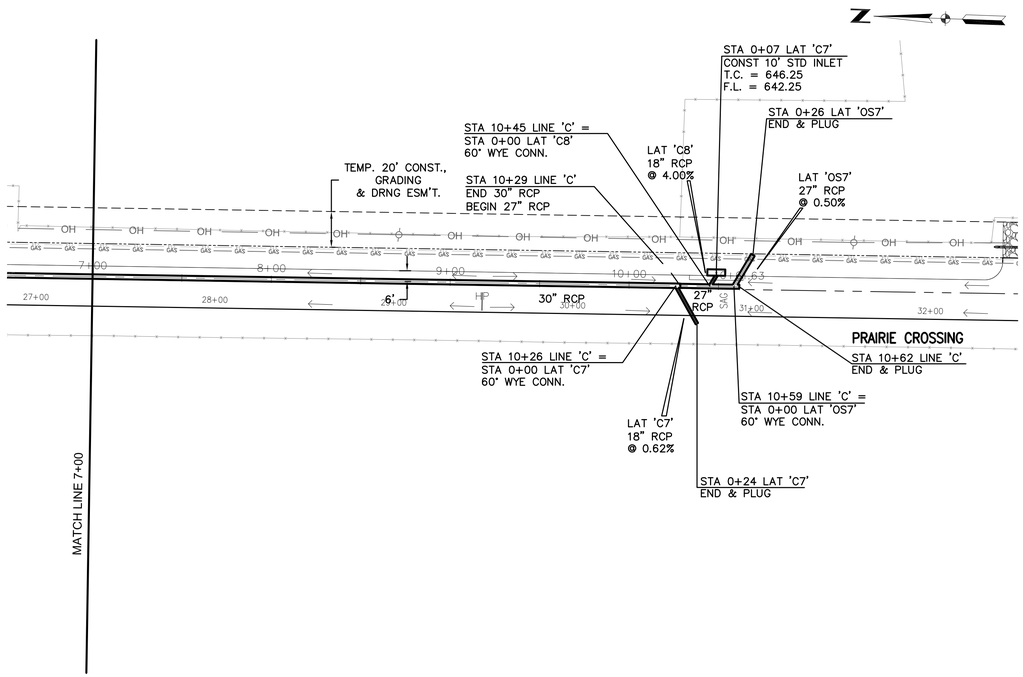

NOTE:
REFER TO SHEETS CS7–CS10 FOR ALL STANDARD CITY STORM DETAILS

SCALE: 1" = 40'

LEGEND

- STORM STORM PIPE
- PROP. CURB INLET
- PROP. STRUCTURE
- PROP. ROCK RIP–RAP
- PROP. CONCRETE APRON
- EX. STORM PIPE
- EX. STRUCTURE
- VALLEY GUTTER
- PROP. DIRECTIONAL FLOW

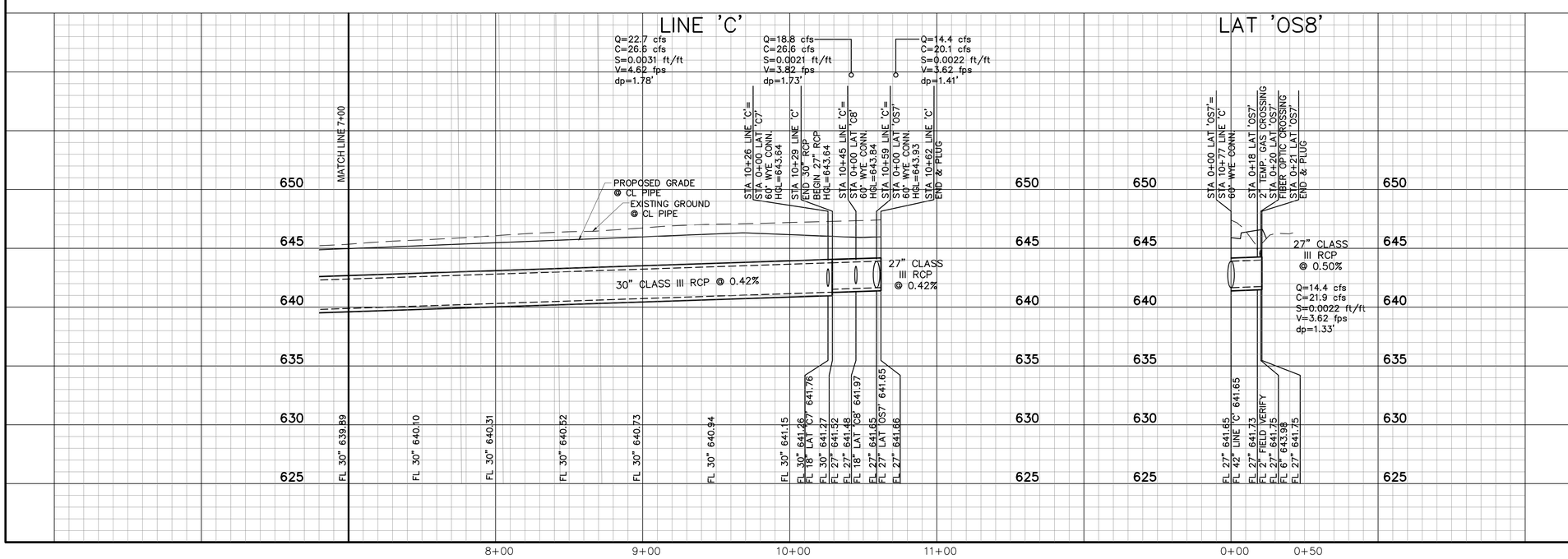

BASIS OF VERTICAL DATUM - NAVD 1988 based on National Geodetic Survey Benchmarks N-185 (Elevation 650.78') and H263 (Elevation - 643.81')

BENCHMARKS:

BM # 79 - Brass monument set on top of curb, southeast side of Light Farms Way, 520+- feet southwesterly from the centerline of Wildrye Ridge.
Elev. = 635.51'

BM # 80 - Brass monument set on curb inlet, southeast side of Light Farms Way, 79+- feet northeasterly from the centerline of Wildrye Ridge.
Elev. = 633.47'

STATE OF TEXAS
ROBERT M. STENGELE
50145
REGISTERED
PROFESSIONAL ENGINEER
11-5-14
Date: 11-05-2014

Hultt-Zollars, Inc.
Firm Registration No. F-761

RECORD DRAWING

THIS RECORD DOCUMENT HAS BEEN PREPARED BASED IN PART UPON INFORMATION FURNISED BY OTHERS. THE DESIGN PROFESSIONAL CANNOT ASSURE THE ACCURACY OF OTHERS' INFORMATION AND THUS IS NOT RESPONSIBLE FOR THE ACCURACY OF THIS RECORD DOCUMENT OR FOR ANY ERROR OR OMISSION THAT MAY HAVE BEEN INCORPORATED INTO IT AS A RESULT. THOSE RELYING ON THIS RECORD DOCUMENT ARE ADVIDED TO OBTAIN INDEPENDENT VERIFICATION OF ITS ACCURACY BEFORE APPLYING IT FOR ANT PURPOSE.

LIGHT FARMS

STORM DRAINAGE PLAN & PROFILE
LINE 'C' CONT.

PRAIRIE CROSSING
(EX. COUNTY ROAD 51)

COLLIN COUNTY MUNICIPAL UTILITY DISTRICT NO.1

LFC LAND COMPANY, LLC
8401 North Central Expressway, Suite 350, Dallas, Texas 75225
Phone (214) 292-3410 Fax (214) 292-3411

HULTT-ZOLLARS
Hultt-Zollars, Inc. Dallas
1717 McKinney Avenue, Suite 1400
Dallas, Texas 75202-1236
Phone (214) 871-3311 Fax (214) 871-0757

SCALE	SHEET No.
AS SHOWN	07-04
DATE 7/30/2014	

PROJECT NUMBER: 01-3905-30

DWG: I:\proj\013905\01\01390530 - CRS1\DWG\RECORD DRAWINGS 11-7-14\07-01 STORM DRAINAGE PLAN & PROFILE.dwg USER: jcooper
DATE: Nov 05, 2014 3:30pm XREFS: GBS BASE-CRS1 PROF-STRM LF-MASTER-BASE BASE EX-CONTOURS CR 51 TOPO LF-MASTER-UTI

CAD FILE PATH: I:\proj\013905\01\01390530 - cr51\dwg\record drawings 11-7-14\07-01 storm drainage plan & profile.dwg

P-201312-01

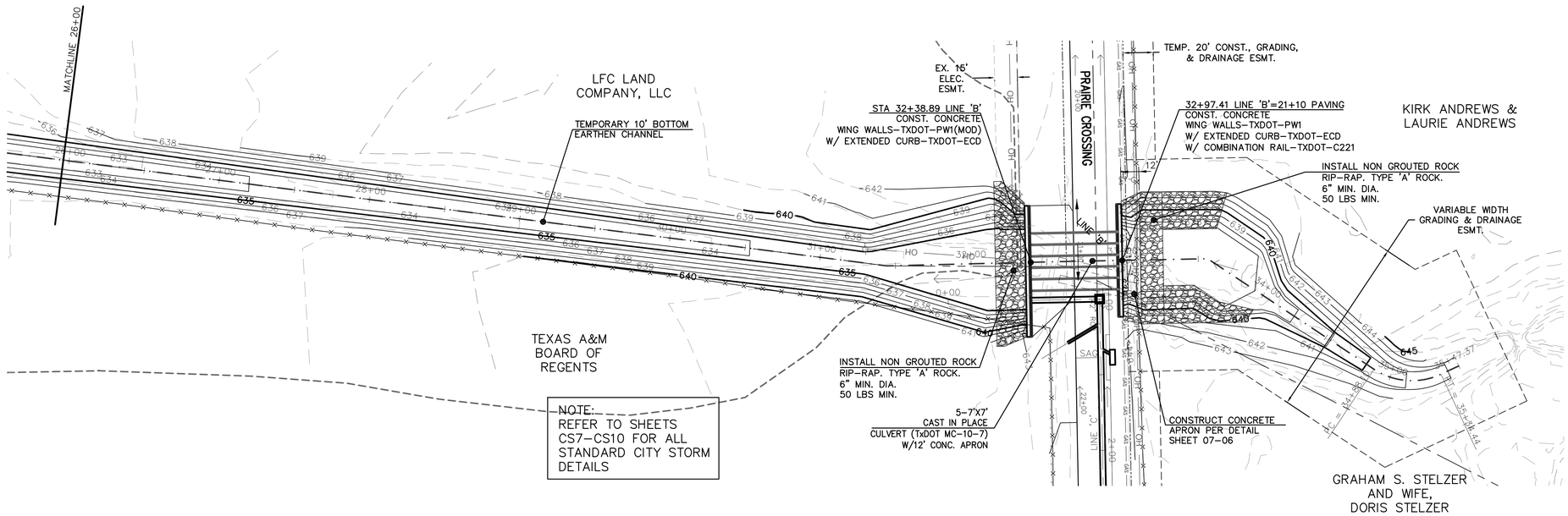

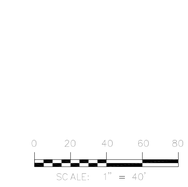

DETAILED PLAN VIEW OF THE CULVERT AND OTHER STRUCTURES ARE SHOWN ON SHEET 07-07

LEGEND

- STORM STORM PIPE
- PROP. CURB INLET
- PROP. STRUCTURE
- PROP. ROCK RIP-RAP
- PROP. CONCRETE APRON
- EX. STORM PIPE
- EX. STRUCTURE
- VALLEY GUTTER
- PROP. DIRECTIONAL FLOW

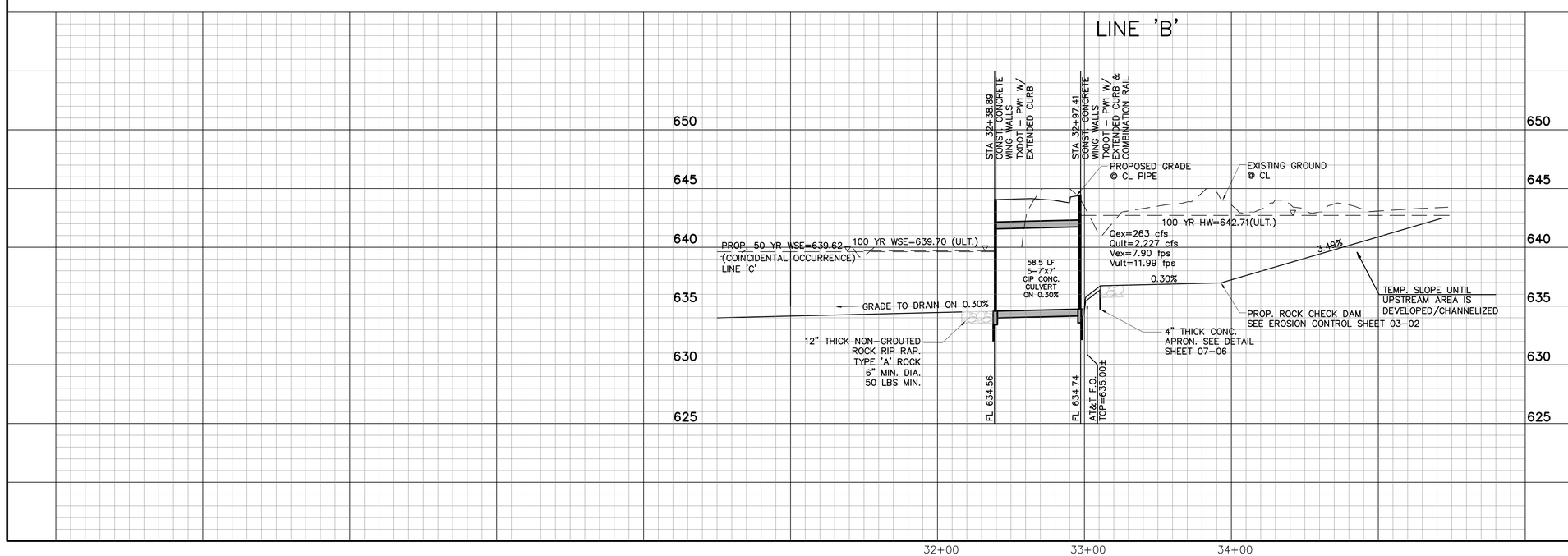

BASIS OF VERTICAL DATUM - NAVD 1988 based on National Geodetic Survey Benchmarks N-185 (Elevation 650.78') and H263 (Elevation - 643.81')

BENCHMARKS:

BM # 79 - Brass monument set on top of curb, southeast side of Light Farms Way, 520+- feet southwesterly from the centerline of Wildrye Ridge.
Elev. = 635.51'

BM # 80 - Brass monument set on curb inlet, southeast side of Light Farms Way, 79+- feet northeasterly from the centerline of Wildrye Ridge.
Elev. = 633.47'

STATE OF TEXAS
ROBERT M. STENGELE
50145
REGISTERED PROFESSIONAL ENGINEER
11-5-14
Date: 11-05-2014

Hulitt-Zollars, Inc.
Firm Registration No. F-761

RECORD DRAWING

THIS RECORD DOCUMENT HAS BEEN PREPARED BASED IN PART UPON INFORMATION FURNISED BY OTHERS. THE DESIGN PROFESSIONAL CANNOT ASSURE THE ACCURACY OF OTHERS' INFORMATION AND THUS IS NOT RESPONSIBLE FOR THE ACCURACY OF THIS RECORD DOCUMENT OR FOR ANY ERROR OR OMISSION THAT MAY HAVE BEEN INCORPORATED INTO IT AS A RESULT. THOSE RELYING ON THIS RECORD DOCUMENT ARE ADVIDED TO OBTAIN INDEPENDENT VERIFICATION OF ITS ACCURACY BEFORE APPLYING IT FOR ANT PURPOSE.

LIGHT FARMS

STORM DRAINAGE PLAN & PROFILE
LINE 'B'

PRAIRIE CROSSING
(EX. COUNTY ROAD 51)

COLLIN COUNTY MUNICIPAL UTILITY DISTRICT NO.1

LFC LAND COMPANY, LLC
8401 North Central Expressway, Suite 350, Dallas, Texas 75225
Phone (214) 292-3410 Fax (214) 292-3411

HULITT-ZOLLARS
Dallas
Hulitt-Zollars, Inc.
1717 McKinney Avenue, Suite 1400
Dallas, Texas 75202-1236
Phone (214) 871-3311 Fax (214) 871-0757

SCALE	SHEET No.
AS SHOWN	07-05
DATE 7/30/2014	

PROJECT NUMBER: 01-3905-30

DWG: I:\proj\01\3905\01\1390530 - CR51\DWG\RECORD DRAWINGS 11-7-14\07-01 STORM DRAINAGE PLAN & PROFILE.dwg USER: jcooper
DATE: Nov 05, 2014 3:32pm XREFS: GBS BASE-CR51 PROF-STRM LF-MASTER-BASE BASE EX-CONTOURS CR 51 TOPO LF-MASTER-UTI

CAD FILE PATH: I:\proj\01\3905\01\1390530 - cr51\dwg\record drawings 11-7-14\07-01 storm drainage plan & profile.dwg

P-201312-01

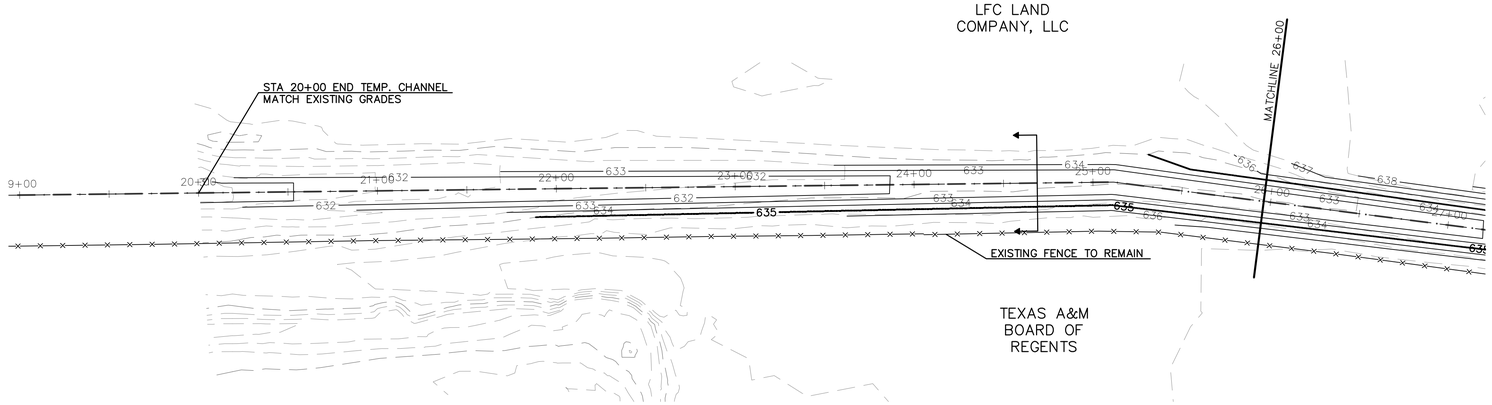

0 20 40 60 80
SCALE: 1" = 40'

LEGEND

- STORM STORM PIPE
- PROP. CURB INLET
- PROP. STRUCTURE
- PROP. ROCK RIP-RAP
- PROP. CONCRETE APRON
- EX. STORM PIPE
- EX. STRUCTURE
- VALLEY GUTTER
- PROP. DIRECTIONAL FLOW

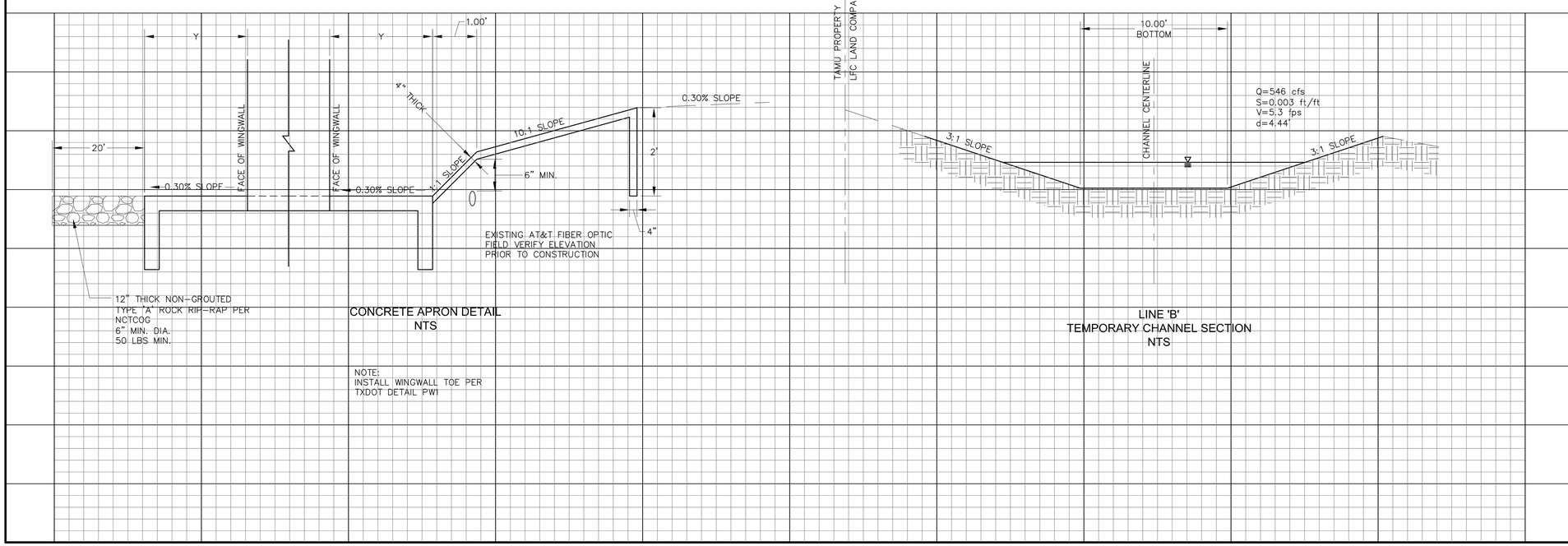

CONCRETE APRON DETAIL
NTS

NOTE:
INSTALL WINGWALL TOE PER
TXDOT DETAIL PW1

LINE 'B'
TEMPORARY CHANNEL SECTION
NTS

BASIS OF VERTICAL DATUM - NAVD 1988 based on National Geodetic Survey Benchmarks N-185 (Elevation 650.78') and H263 (Elevation - 643.81')

BENCHMARKS:

BM # 79 - Brass monument set on top of curb, southeast side of Light Farms Way, 520+- feet southwesterly from the centerline of Wildrye Ridge.
Elev. = 635.51'

BM # 80 - Brass monument set on curb inlet, southeast side of Light Farms Way, 79+- feet northeasterly from the centerline of Wildrye Ridge.
Elev. = 633.47'

STATE OF TEXAS
ROBERT M. STENGELE
50145
REGISTERED
PROFESSIONAL ENGINEER
11-5-14
Date: 11-05-2014

Hulitt-Zollars, Inc.
Firm Registration No. F-761

RECORD DRAWING

THIS RECORD DOCUMENT HAS BEEN PREPARED BASED IN PART UPON INFORMATION FURNISED BY OTHERS. THE DESIGN PROFESSIONAL CANNOT ASSURE THE ACCURACY OF OTHERS' INFORMATION AND THUS IS NOT RESPONSIBLE FOR THE ACCURACY OF THIS RECORD DOCUMENT OR FOR ANY ERROR OR OMISSION THAT MAY HAVE BEEN INCORPORATED INTO IT AS A RESULT. THOSE RELYING ON THIS RECORD DOCUMENT ARE ADVIDED TO OBTAIN INDEPENDENT VERIFICATION OF ITS ACCURACY BEFORE APPLYING IT FOR ANT PURPOSE.

LIGHT FARMS

STORM DRAINAGE PLAN & PROFILE
LINE 'B' CONT.

PRAIRIE CROSSING
(EX. COUNTY ROAD 51)

COLLIN COUNTY MUNICIPAL UTILITY DISTRICT NO.1

LFC LAND COMPANY, LLC
8401 North Central Expressway, Suite 350, Dallas, Texas 75225
Phone (214) 292-3410 Fax (214) 292-3411

HULITT-ZOLLARS
Hulitt-Zollars, Inc. Dallas
1717 McKinney Avenue, Suite 1400
Dallas, Texas 75202-1236
Phone (214) 871-3311 Fax (214) 871-0757

SCALE	SHEET No.
AS SHOWN	
DATE	07-06
7/30/2014	

PROJECT NUMBER: 01-3905-30

DWG: I:\proj\013905\01\01390530 - CR51\DWG\RECORD DRAWINGS 11-7-14\07-01 STORM DRAINAGE PLAN & PROFILE.dwg USER: jcooper
DATE: Nov 05, 2014 3:32pm XREFS: GBS BASE-CR51 PROF-STRM LF-MASTER-BASE BASE EX-CONTOURS CR 51 TOPO LF-MASTER-UTI

CAD FILE PATH: I:\proj\013905\01\01390530 - cr51\dwg\record drawings 11-7-14\07-01 storm drainage plan & profile.dwg

P-201312-01

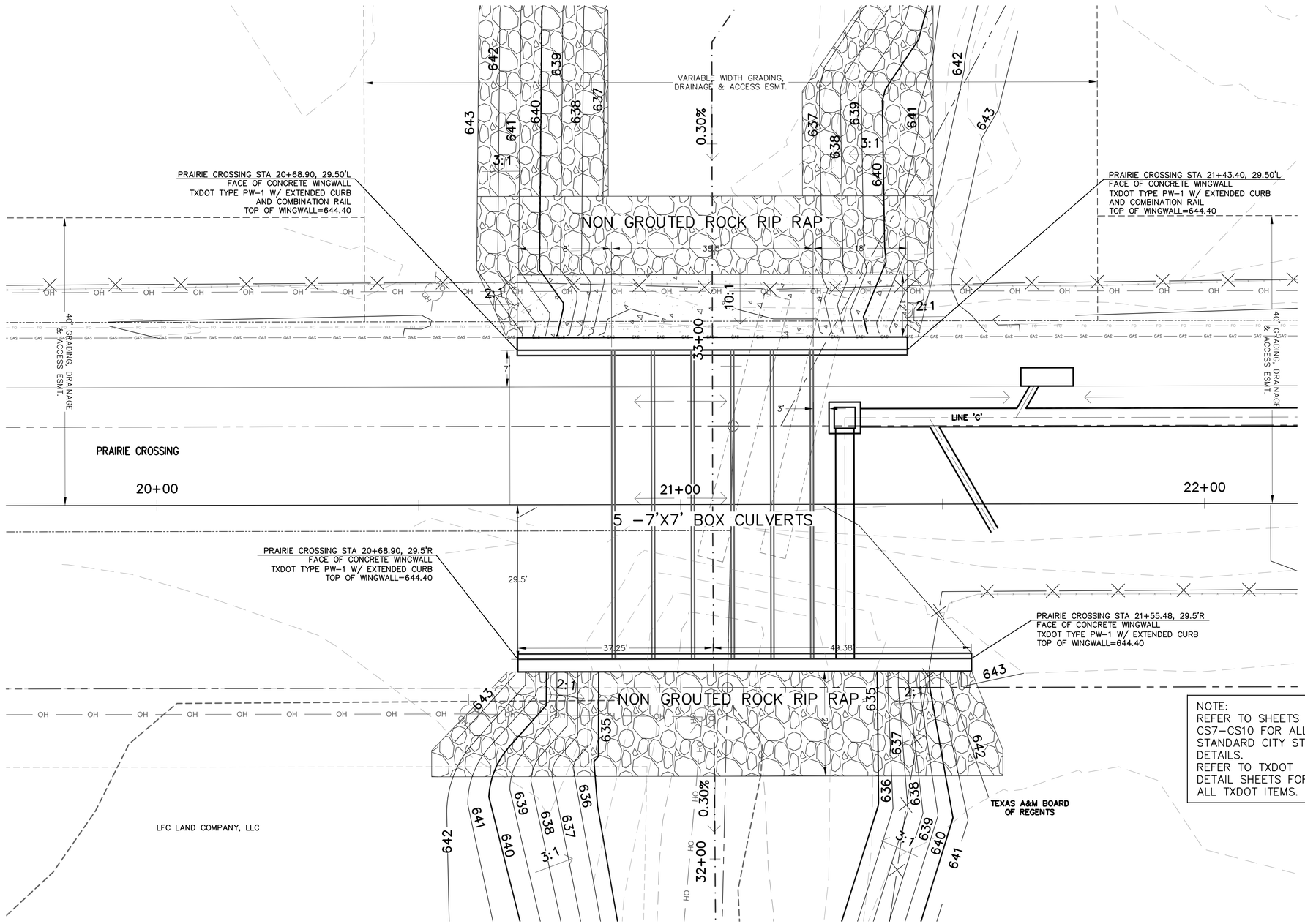

NOTE:
REFER TO SHEETS CS7-CS10 FOR ALL STANDARD CITY STORM DETAILS.
REFER TO TXDOT DETAIL SHEETS FOR ALL TXDOT ITEMS.

LEGEND

- STORM STORM PIPE
- PROP. CURB INLET
- PROP. STRUCTURE
- PROP. ROCK RIP-RAP
- PROP. CONCRETE APRON
- EX. STORM PIPE
- EX. STRUCTURE
- VALLEY GUTTER
- PROP. DIRECTIONAL FLOW

BASIS OF VERTICAL DATUM - NAVD 1988 based on National Geodetic Survey Benchmarks N-185 (Elevation 650.78') and H263 (Elevation - 643.81')

BENCHMARKS:

BM # 79 - Brass monument set on top of curb, southeast side of Light Farms Way, 520+- feet southwesterly from the centerline of Wildrye Ridge.
Elev. = 635.51'

BM # 80 - Brass monument set on curb inlet, southeast side of Light Farms Way, 79+- feet northeasterly from the centerline of Wildrye Ridge.
Elev. = 633.47'

STATE OF TEXAS
ROBERT M. STENGELE
50145
REGISTERED
PROFESSIONAL ENGINEER
11-5-14
Date: 11-05-2014

RECORD DRAWING

THIS RECORD DOCUMENT HAS BEEN PREPARED BASED IN PART UPON INFORMATION FURNISED BY OTHERS. THE DESIGN PROFESSIONAL CANNOT ASSURE THE ACCURACY OF OTHERS' INFORMATION AND THUS IS NOT RESPONSIBLE FOR THE ACCURACY OF THIS RECORD DOCUMENT OR FOR ANY ERROR OR OMISSION THAT MAY HAVE BEEN INCORPORATED INTO IT AS A RESULT. THOSE RELYING ON THIS RECORD DOCUMENT ARE ADVIDED TO OBTAIN INDEPENDENT VERIFICATION OF ITS ACCURACY BEFORE APPLYING IT FOR ANT PURPOSE.

LIGHT FARMS

CULVERT PLAN DETAIL

PRAIRIE CROSSING
(EX. COUNTY ROAD 51)

COLLIN COUNTY MUNICIPAL UTILITY DISTRICT NO.1

LFC LAND COMPANY, LLC
8401 North Central Expressway, Suite 350, Dallas, Texas 75225
Phone (214) 292-3410 Fax (214) 292-3411

HUITT-ZOLLARS
Huitt-Zollars, Inc. Dallas
1717 McKinney Avenue, Suite 1400
Dallas, Texas 75202-1236
Phone (214) 871-3311 Fax (214) 871-0757

SCALE	SHEET No.
AS SHOWN	07-07
DATE 7/30/2014	

PROJECT NUMBER: 01-3905-30

DWG: I:\proj\01\3905\01\390530 - CR51\DWG\RECORD DRAWINGS 11-7-14\07-01 STORM DRAINAGE PLAN & PROFILE.dwg USER: jcooper
DATE: Nov 05, 2014 3:33pm XREFS: GBS BASE-CR51 PROF-STRM LF-MASTER-BASE BASE EX-CONTOURS CR 51 TOPO LF-MASTER-UTI

CAD FILE PATH: I:\proj\01\3905\01\390530 - cr51\dwg\record drawings 11-7-14\07-01 storm drainage plan & profile.dwg

P-201312-01

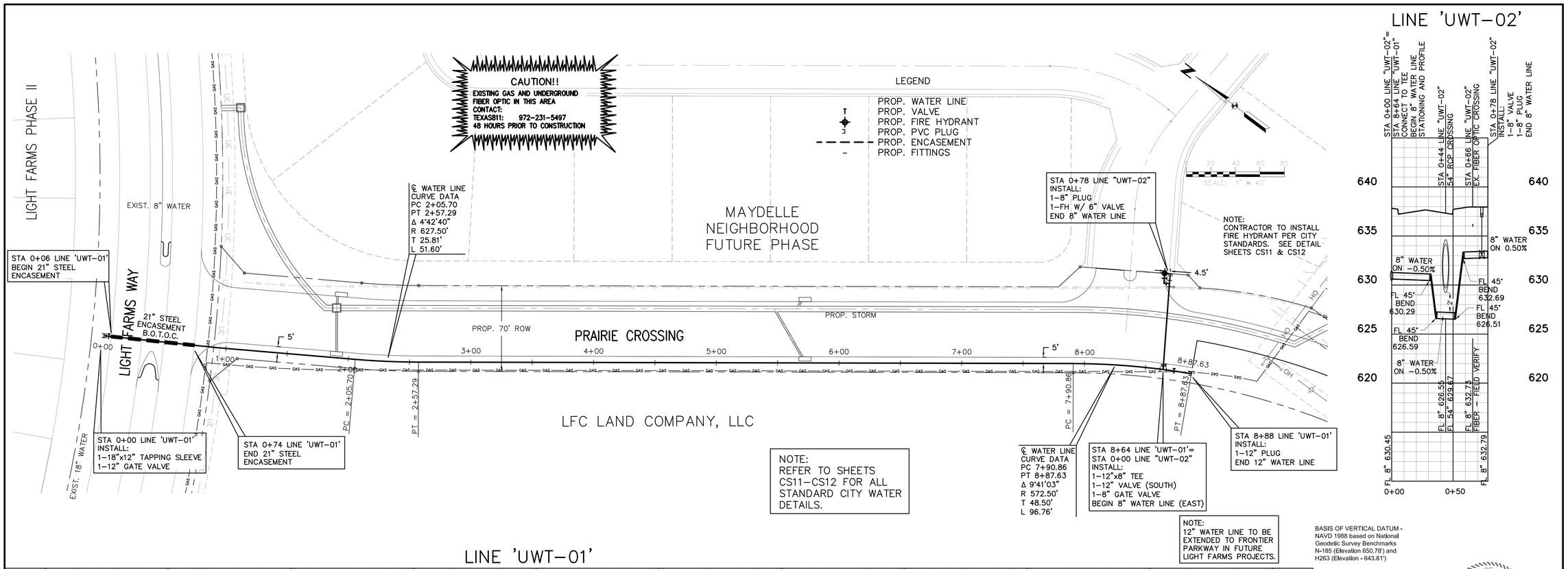

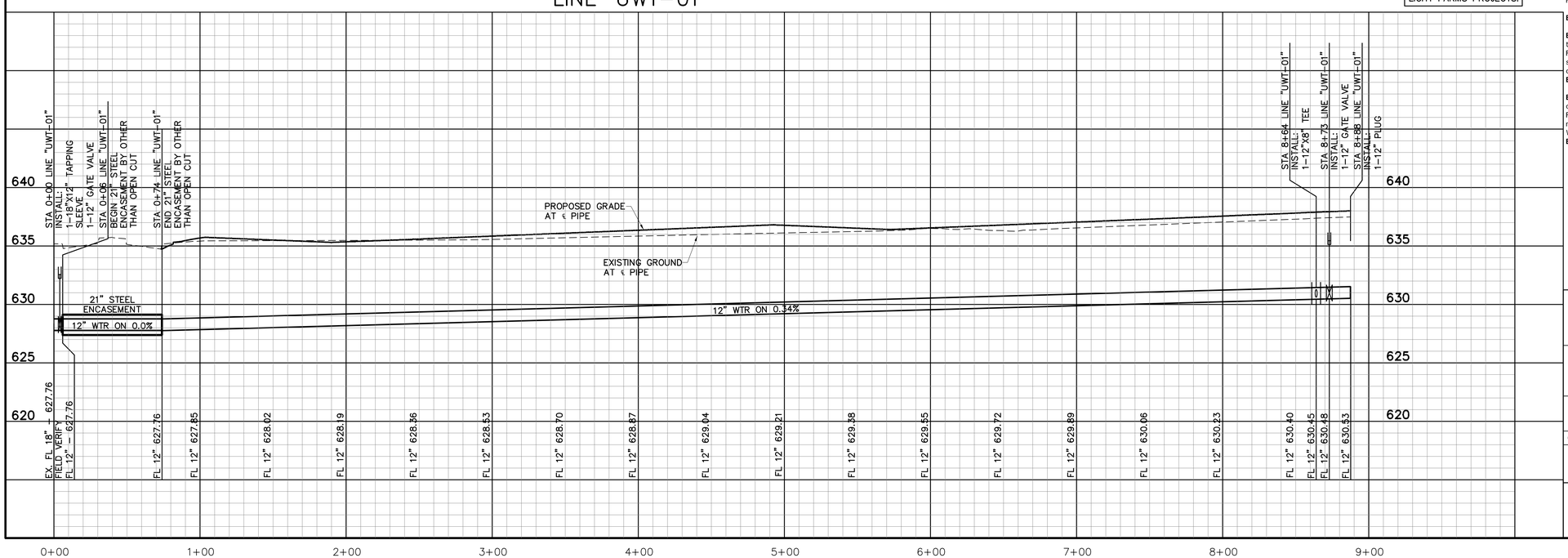

BASIS OF VERTICAL DATUM - NAVD 1988 based on National Geodetic Survey Benchmarks N-185 (Elevation 650.78') and H263 (Elevation - 643.81')

BENCHMARKS:

BM # 79 - Brass monument set on top of curb, southeast side of Light Farms Way, 520+- feet southwesterly from the centerline of Wildrye Ridge.
Elev. = 635.51'

BM # 80 - Brass monument set on curb inlet, southeast side of Light Farms Way, 79+- feet northeasterly from the centerline of Wildrye Ridge.
Elev. = 633.47'

STATE OF TEXAS
ROBERT M. STENGELE
50145
REGISTERED PROFESSIONAL ENGINEER

11-5-14
Date: 11-05-2014

Hulitt-Zollars, Inc.
Firm Registration No. F-761

RECORD DRAWING

THIS RECORD DOCUMENT HAS BEEN PREPARED BASED IN PART UPON INFORMATION FURNISED BY OTHERS. THE DESIGN PROFESSIONAL CANNOT ASSURE THE ACCURACY OF OTHERS' INFORMATION AND THUS IS NOT RESPONSIBLE FOR THE ACCURACY OF THIS RECORD DOCUMENT OR FOR ANY ERROR OR OMISSION THAT MAY HAVE BEEN INCORPORATED INTO IT AS A RESULT. THOSE RELYING ON THIS RECORD DOCUMENT ARE ADVIDED TO OBTAIN INDEPENDENT VERIFICATION OF ITS ACCURACY BEFORE APPLYING IT FOR ANT PURPOSE.

LIGHT FARMS

WATER PLAN & PROFILE

PRAIRIE CROSSING
(EX. COUNTY ROAD 51)
COLLIN COUNTY MUNICIPAL UTILITY DISTRICT NO.1
LFC LAND COMPANY, LLC
8401 North Central Expressway, Suite 350, Dallas, Texas 75225
Phone (214) 292-3410 Fax (214) 292-3411

HULITT-ZOLLARS
Hulitt-Zollars, Inc. Dallas
1717 McKinney Avenue, Suite 1400
Dallas, Texas 75202-1236
Phone (214) 871-3311 Fax (214) 871-0757

SCALE	SHEET No.
H: 1" = 40' V: 1" = 5'	08-01
DATE 7/30/2014	

PROJECT NUMBER: 01-3905-30

DWG: I:\proj\013905\01\1390530 - CR51\DWG\RECORD DRAWINGS 11-7-14\08-01 WATER & SEWER PLAN.dwg USER: jcooper
DATE: Nov 05, 2014 3:39pm XREFS: GBS BASE-CR51 LF-MASTER-BASE BASE EX-CONTOURS CR 51 TOPO PROP-WATR

CAD FILE PATH: I:\proj\013905\01\1390530 - cr51\dwg\record drawings 11-7-14\08-01 water & sewer plan.dwg

P-201312-01

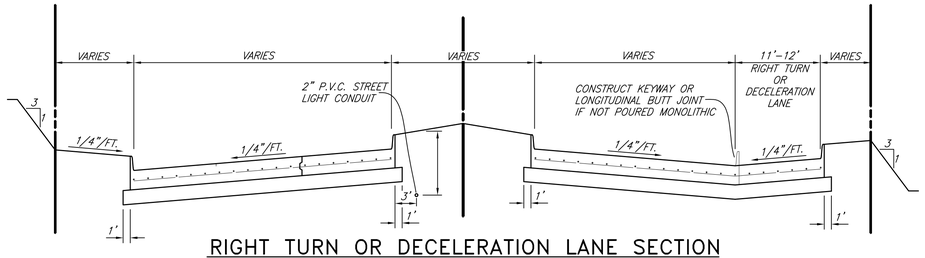

RIGHT TURN OR DECELERATION LANE SECTION

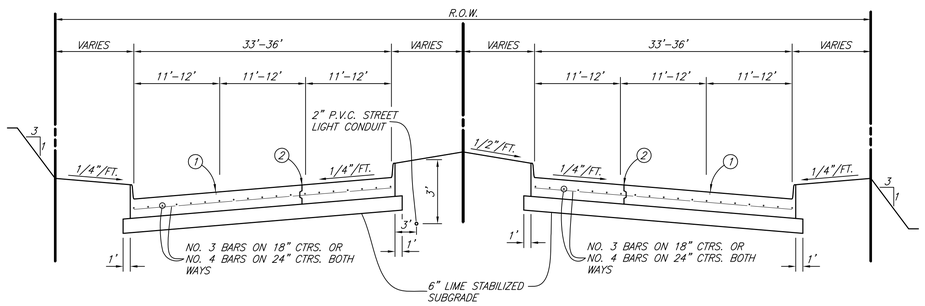

REGULAR SECTION

M6D & P6D

(REG_SECT)

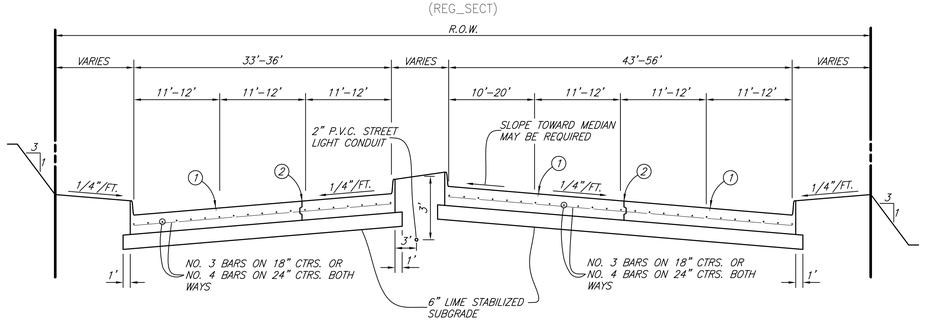

LEFT TURN SECTION

(LTURN_SECT)

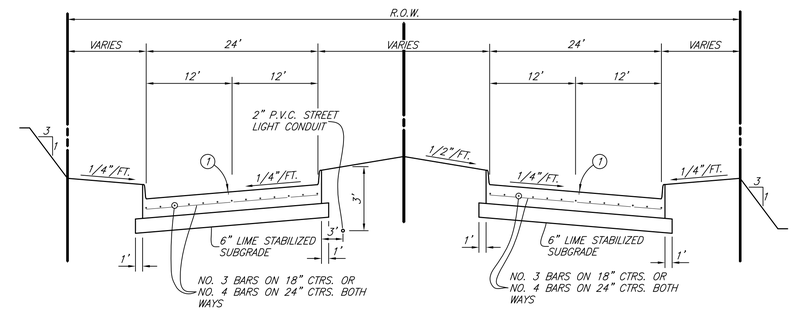

REGULAR SECTION

M4D

(REG_SECT2)

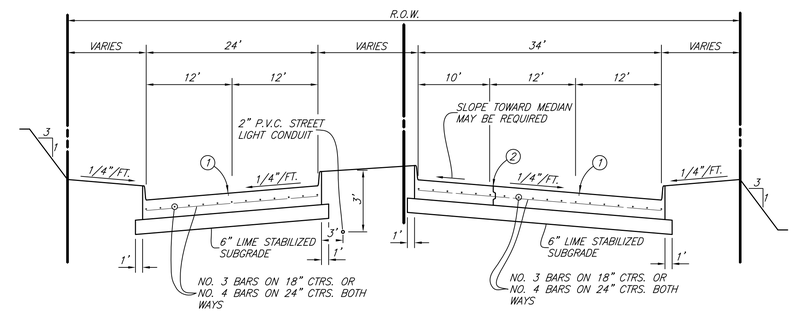

LEFT TURN SECTION

NOTE:
FOR RETROFIT TURN LANES AND MEDIAN OPENINGS. TWO ADDITIONAL INCHES OF CONCRETE CAN BE PLACED IN LIEU OF LIME STABILIZATION.

(LTURN_SECT2)

M60, P60, M4D SECTIONS SHALL HAVE MINIMUM PAVEMENT THICKNESS OF 8 INCHES.

LIME STABILIZED SUBGRADE – THE RATE OF HYDRATED LIME SHALL BE 7 1/2% BY UNIT DRY WEIGHT OR THAT PERCENT TO REDUCE THE SOIL P.I. TO LESS THAN 15. CONTRACTOR TO PROVIDE CITY WITH LIME SERIES TEST TO DETERMINE THE OPTIMUM LIME CONTENT.

LEGEND

1 – SAWED LONGITUDINAL DUMMY JOINT

A. CONSTRUCTION JOINT (FULL WIDTH PVMT. IS ALLOWED WHERE APPROVED BY CITY).

2 – B. DELETE IT WHEN PAVING IS 25 FT. WIDTH TO BE WIDENED IN FUTURE.

C. INSTALL CURB IF PAVING IS LESS THAN FULL WIDTH OF 33'–36'.

(LEGNED_PVMT)

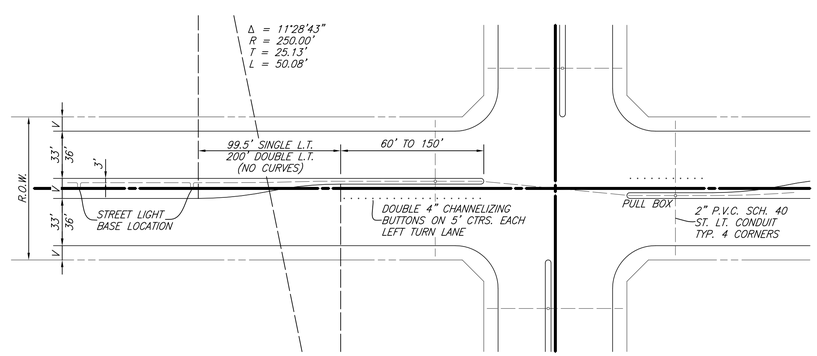

LEFT TURN PLAN

(PVMT–PLAN)

CITY OF CELINA, TEXAS

PAVING

STANDARD DETAILS – CS1

P-201312-01

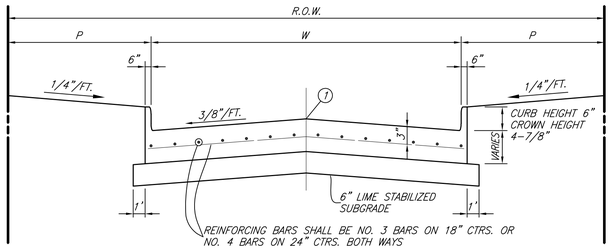

REGULAR SECTION

R2U
C2U

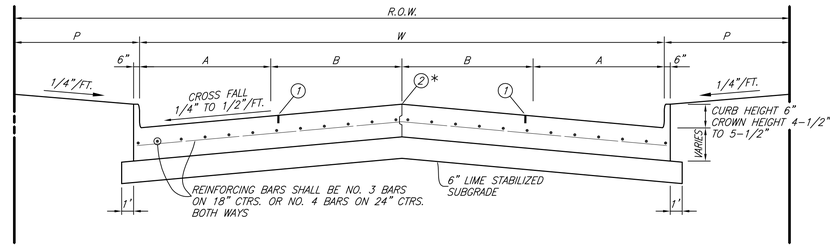

REGULAR SECTION

C4U
M4U
M5U

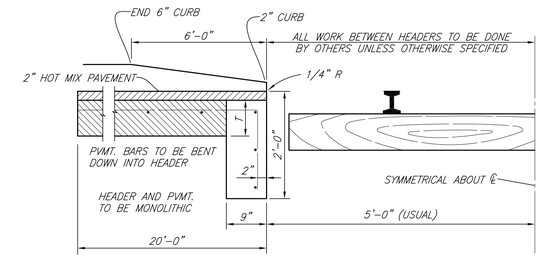

RAIL HEADER

(RR-HEADER)

(PARA_SECT)

LEGEND

1 – SAWED LONGITUDINAL DUMMY JOINT

2 – CONSTRUCTION JOINT (FULL WIDTH PVMT. IS ALLOWED WHERE APPROVED BY CITY)

(LEGEND_PVMT2)

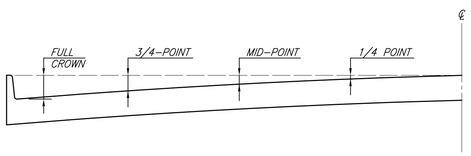

ROADWAY WIDTH (W)	TOTAL CROWN HEIGHT	3/4 POINT	MID-POINT	1/4 POINT
26'	4"	2-1/4"	1"	1/4"
36'	6"	3-3/8"	1-1/2"	3/8"
44'	6"	3-3/8"	1-1/2"	3/8"

TABLE OF CROWN HEIGHTS AND ORDINATES FOR VARIOUS PARABOLIC SECTIONS

SLIP-FORM PAVEMENT MUST MEET CROWN GRADES AT GUTTERS, AT MID-POINTS & ℄

PARABOLIC ROADS ONLY TO BE CONSTRUCTED WITH SLIP FORM PAVERS

(PARA-TABLE)

R2U, C2U, C4U, M4U & M5U PAVING SECTIONS SHALL HAVE A MINIMUM PAVEMENT THICKNESS OF 6 INCHES.

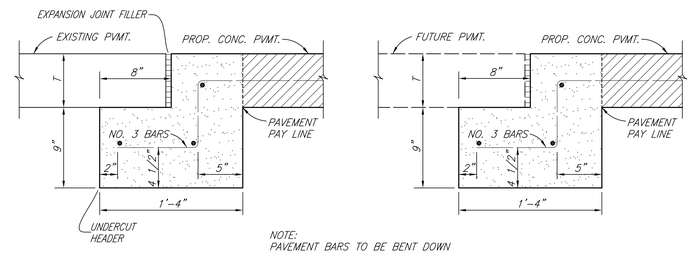

NOTE:
PAVEMENT BARS TO BE BENT DOWN INTO HEADER. PAVEMENT AND HEADER SHALL BE MONOLITHIC.

STREET HEADER

(HEADER)

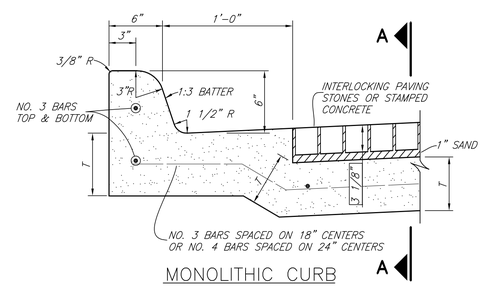

MONOLITHIC CURB

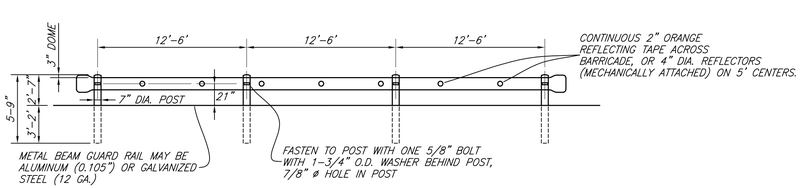

NON CONSTRUCTION BARRICADES (PERMANENT BARRICADES) SHALL CONSIST OF TxDOT GF(TD)-87 METAL BEAM GUARD FENCE WITH TERMINAL CONNECTOR SECTIONS AT EACH END. PERMANENT BARRICADES SHALL BE MANUFACTURED AND CONSTRUCTED IN ACCORDANCE WITH TxDOT DETAILS. BARRICADE SHALL EXTEND FROM OUTSIDE CURB TO OUTSIDE CURB.

TYPICAL PERMANENT BARRICADE DETAIL

(PERM-BARRICADE)

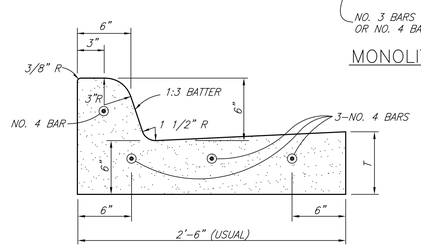

SEPARATE CURB AND GUTTER

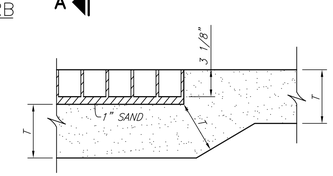

SECTION A-A

PAVING STONES SHALL BE PER NCTCOG ITEMS 2.3.7 AND 5.8 OF SPECIAL PROVISIONS

CURB AND CURB AND GUTTER

(CURB-GUT)

CITY OF CELINA, TEXAS

PAVING

STANDARD DETAILS – CS2

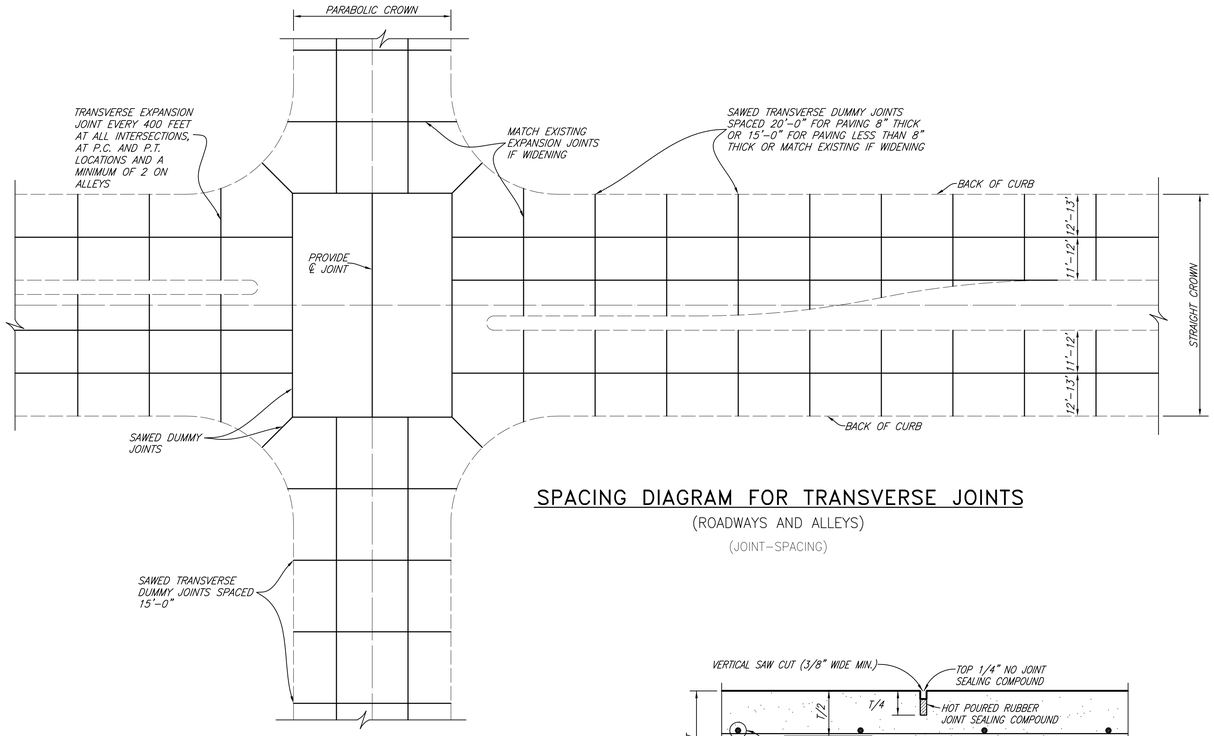

SPACING DIAGRAM FOR TRANSVERSE JOINTS

(ROADWAYS AND ALLEYS)

(JOINT-SPACING)

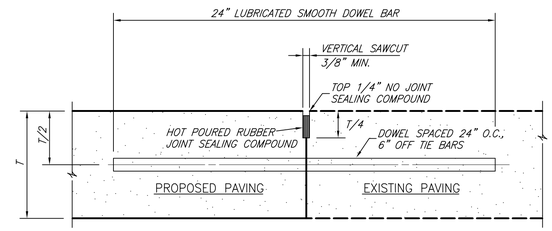

NOTE:

1. T-8" AND GREATER NO. 6 BAR, T-6" AND LESS NO. 5 BAR
2. LONGITUDINAL BUTT CONSTRUCTION MAY BE UTILIZED IN PLACE OF LONGITUDINAL HINGED (KEYWAY) JOINT AT CONTRACTORS OPTION.
3. DOWEL BARS SHALL BE DRILLED INTO PAVEMENT HORIZONTALLY BY USE OF A MECHANICAL RIG. HAND DRILLING NOT ACCEPTABLE. DAMAGE TO EXISTING PAVEMENT SHALL BE REMOVED BY CONTRACTOR AND JOINT CONSTRUCTED AT CONTRACTORS EXPENSE.
4. DOWEL BAR SHOWN IS IN ADDITION TO TIE BARS (12" O.C.-6" OFF DOWELS).
5. TIE BARS SHALL BE NO. 5 BAR DEFORMED. TIE BAR SHALL HAVE A LENGTH OF 24 INCHES.

LONGITUDINAL BUTT JOINT

(BUTTJNT)

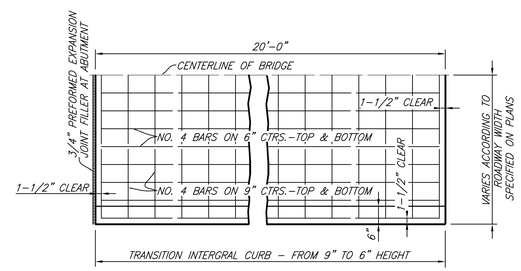

PLAN

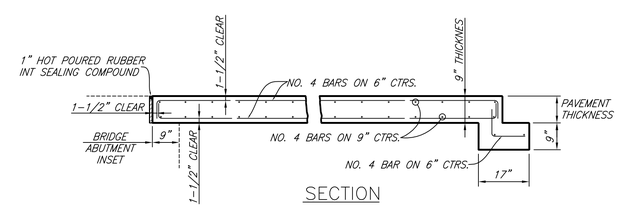

SECTION

BRIDGE APPROACH SLAB

(APPROACHSLAB)

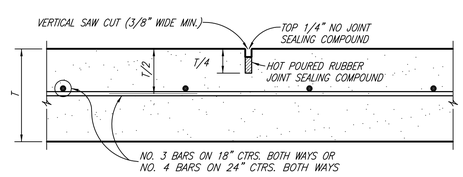

TRANSVERSE JOINTS SPACED 15 FT. C.-C. (MAX.)
LONGITUDINAL JOINTS SPACED 20 FT. C.-C. (MAX.)

SAWED DUMMY JOINT

(DUMMYJNT)

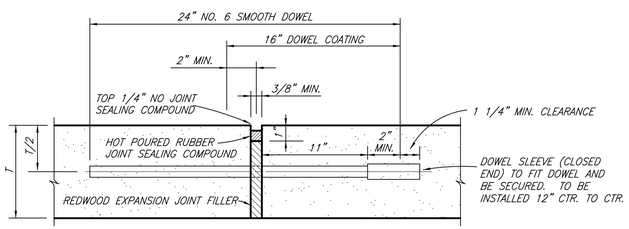

TRANSVERSE EXPANSION JOINT NOTES:

1. DOWELS AND REINFORCING BARS SHALL BE SUPPORTED BY AN APPROVED DEVICE.
2. TRANSVERSE EXPANSION JOINTS SHALL BE SPACED AT 400 FT. MAXIMUM AND AT ALL INTERSECTIONS.

TRANSVERSE EXPANSION JOINT

(EXPJNT)

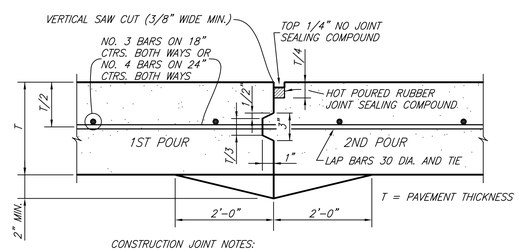

CONSTRUCTION JOINT NOTES:

1. CONTRACTOR SHALL PROTECT KEYWAY PRIOR TO SECOND POUR. IF LONGITUDINAL KEYWAY IS DAMAGED, CONTRACTOR SHALL REPAIR WITH THE USE OF LONGITUDINAL BUTT JOINT (DRILL DOWELS INTO FIRST POUR).
2. THICKENED EDGES ARE REQUIRED FOR FUTURE WIDENING ONLY.

CONSTRUCTION JOINT

(CONSTJNT)

CITY OF CELINA, TEXAS

PAVING

STANDARD DETAILS - CS3

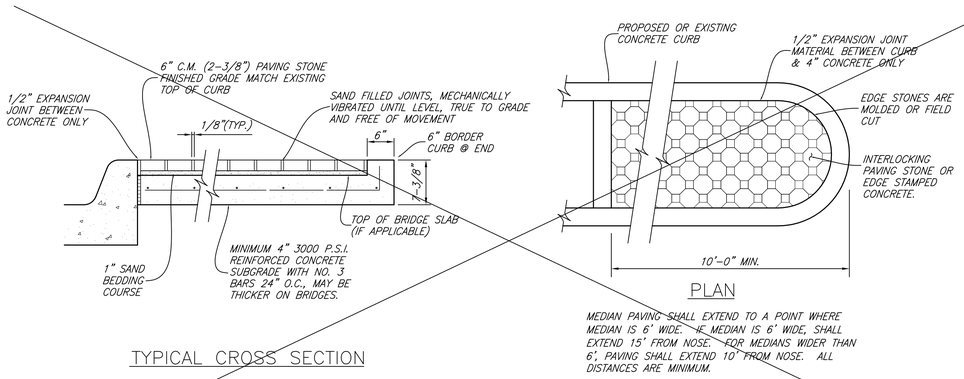

TYPICAL CROSS SECTION

PLAN

MEDIAN PAVING SHALL EXTEND TO A POINT WHERE MEDIAN IS 6' WIDE. IF MEDIAN IS 6' WIDE, SHALL EXTEND 15' FROM NOSE. FOR MEDIANS WIDER THAN 6', PAVING SHALL EXTEND 10' FROM NOSE. ALL DISTANCES ARE MINIMUM.

STAMPED CONCRETE OR INTERLOCKING PAVING STONE

COLOR AND STYLE TO BE SELECTED BY CITY

(MEDIAN_STONE)

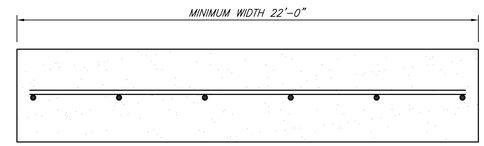

1. ALL FIRE LANES SHALL BE PAVED WITH A MINIMUM OF 8 INCHES OF 3000 P.S.I. CONCRETE REINFORCED WITH #3 REBAR PLACED ON 18 INCH CENTERS EACH WAY ON A 6 INCH LIME STABILIZED SUBGRADE THE SUBGRADE SHALL BE STABILIZED WITH HYDRATED LIME IN SUFFICIENT AMOUNT TO REDUCE THE PLASTICITY INDEX BELOW FIFTEEN (15). IF NO LABORATORY CONTROL IS USED, THE AMOUNT OF LIME SHALL BE EQUAL TO SEVEN AND ONE HALF (7-1/2) PERCENT BY UNIT DRY WEIGHT OF SOIL ESTIMATED AT 75 POUNDS PER CUBIC FEET OF 32 POUNDS OF LIME PER SQUARE YARD OF SURFACE AREA TREATED TO A 6 INCH THICKNESS.

2. ALL FIRE LANES MAY BE PAVED WITH 6 INCHES OF 3000 P.S.I. CONCRETE (28 DAYS COMPRESSIVE STRENGTH) REINFORCED WITH #3 REBAR PLACED ON 18 INCH CENTERS EACH WAY ON A SUBGRADE SCARIFIED AND COMPACTED TO AT LEAST 95% STANDARD PROCTOR DENSITY. CONTRACTION JOINTS SHALL BE SPACED AT A MAXIMUM OF 15.5 FEET ON CENTERS EACH WAY. CONTRACTION JOINTS MAY BE DUMMY OR SAWED JOINTS T A DEPTH OF AT LEAST ONE (1) INCH DEEP. TO INSURE PROPER RUNOFF IN ORDER TO PREVENT PONDING, THE PAVEMENT SURFACE SHOULD HAVE A MINIMUM SLOPE OF 1%(12" PER 100 FEET.).

3. ALTERNATE PAVING DESIGN:
IN LIEU OF ITEMS LISTED ABOVE, THE DEVELOPER MAY SUBMIT AN ENGINEERED DESIGN THAT WILL BE EQUIVALENT IN PERFORMANCE OF THE SPECIFICATIONS ABOVE. THE EQUIVALENT DESIGN MUST TAKE INTO ACCOUNT THE SOIL CONDITIONS OF THE SITE TO BE DEVELOPED. SUCH DESIGN SHALL REQUIRE APPROVAL BY PUBLIC WORKS DIRECTOR.

FIRE LANE PAVING & JOINT DETAIL

(FIRELANEJNT)

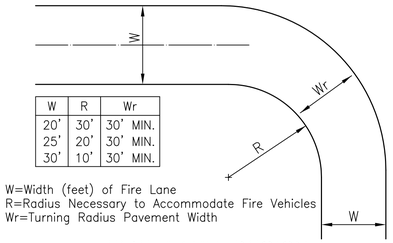

W	R	Wr
20'	30'	30' MIN.
25'	20'	30' MIN.
30'	10'	30' MIN.

W=Width (feet) of Fire Lane
R=Radius Necessary to Accommodate Fire Vehicles
Wr=Turning Radius Pavement Width

FIRE LANE DESIGN

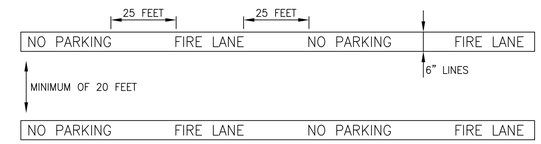

1. THE FIRE CHIEF IS AUTHORIZED TO DESIGNATE FIRE LANES.

2. FIRE LANES SHALL BE MARKED BY SIX INCH (6") WIDE LINES USING RED TRAFFIC PAINT, WITH THE WORDING "NO PARKING" AND "FIRE LANE" PAINTED ON THE LINES AT INTERVALS OF TWENTY-FIVE (25'). THE LETTERING WILL BE FOUR INCHES (4") HIGH WITH A ONE INCH (1") WIDE STROKE PAINTED WITH WHITE TRAFFIC PAINT.

3. FIRE LANES SHALL BE A MINIMUM OF TWENTY-FEET (20') IN WIDTH.

4. ANY DEAD-END FIRE LANE MORE THAN ONE HUNDRED FIFTY-FEET (150') LONG SHALL PROVIDE A TURN AROUND OF ONE HUNDRED FEET (100') IN DIAMETER AT THE CLOSED END, IN ACCORDANCE WITH THE CITY OF LANCASTER CUL-DE-SAC PLAN DRAWING NO. 6F-7.

FIRE LANE MARKING

(FIRELANE)

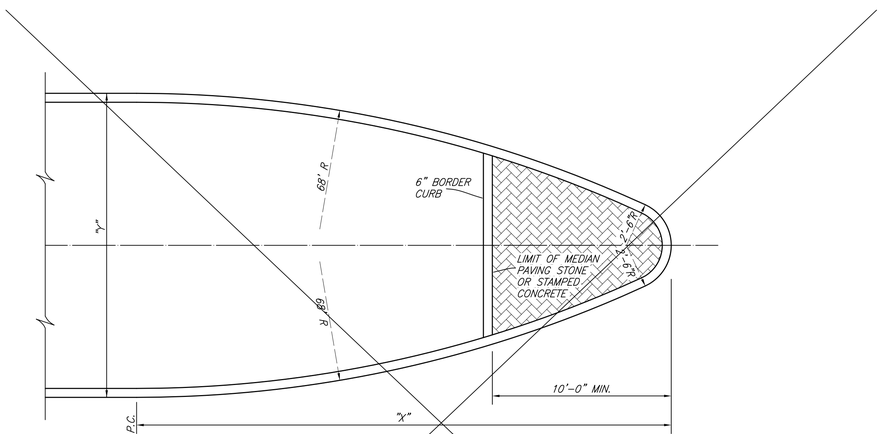

DETAIL OF NOSE FOR MEDIAN ISLAND

DIMENSIONS OF MEDIAN NOSE

X = 13.90'	Y = 7.0'	X = 26.36'	Y = 14.0'
X = 16.44'	Y = 8.0'	X = 29.89'	Y = 17.0'
X = 18.06'	Y = 9.0'	X = 32.93'	Y = 20.0'
X = 20.42'	Y = 10.0'	X = 36.47'	Y = 24.0'

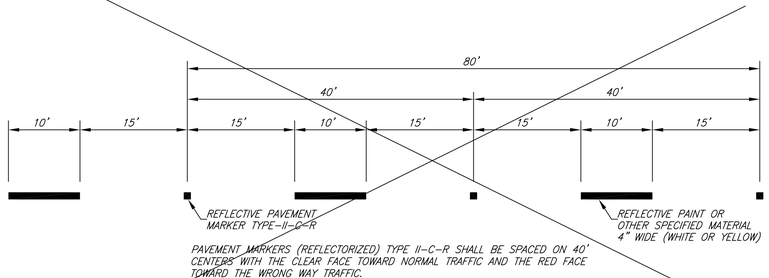

PAVEMENT MARKERS (REFLECTORIZED) TYPE II-C-R SHALL BE SPACED ON 40' CENTERS WITH THE CLEAR FACE TOWARD NORMAL TRAFFIC AND THE RED FACE TOWARD THE WRONG WAY TRAFFIC.

LANE LINE PAVEMENT MARKING

(MARKING)

MOUNTABLE CURB SECTION

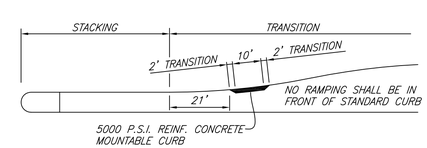

MOUNTALBE CURB DETAIL-PLAN VIEW

LANDSCAPE MAINTENANCE RAMP

(LANDSCAPE_RAMP)

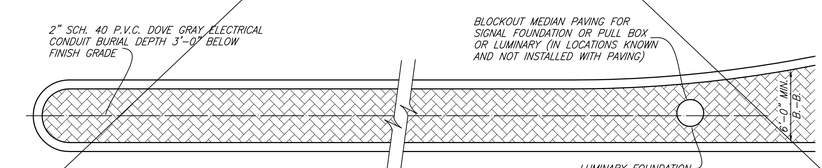

DETAIL OF MEDIAN PAVEMENT

(MEDIAN_DTL)

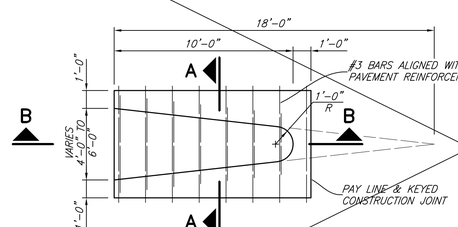

PLAN

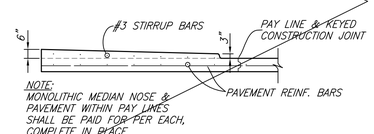

NOTE:
MONOLITHIC MEDIAN NOSE & PAVEMENT WITHIN PAY LINES SHALL BE PAID FOR PER EACH, COMPLETE IN PLACE

SECTION B-B

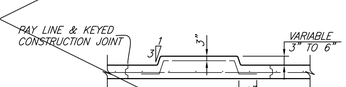

SECTION A-A

MONOLITHIC MEDIAN NOSE

(MONO_MEDIAN)

CITY OF CELINA, TEXAS

PAVING

STANDARD DETAILS CS4

P-201312-01

ALLEY WIDTH (A)	HALF WIDTH (L)
12'	6'
16'	8'
20'	10'

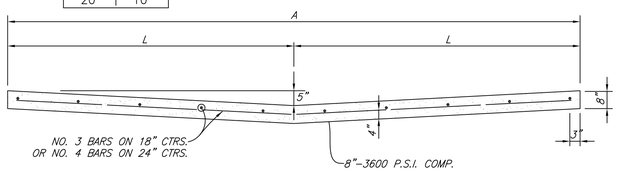

STANDARD 12, 16' & 20' ALLEY SECTION

(STDALLEY2)

ALLEY WIDTH	A	B	C	D
12'	12'	2'-6"	17'	12'
16'	16'	2'-6"	21'	16'
20'	20'	2'-6"	25'	20'

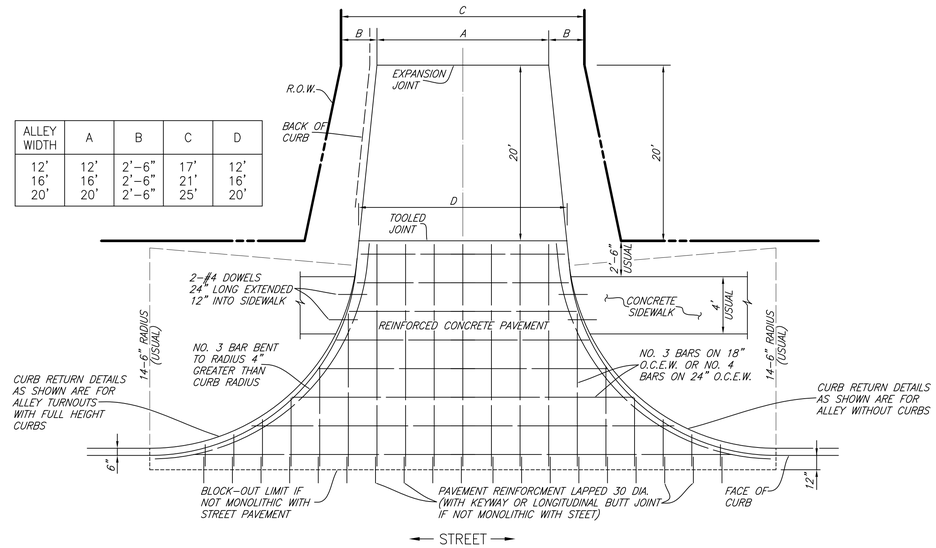

ALLEY RETURN DETAILS

(ALLEY_DTL)

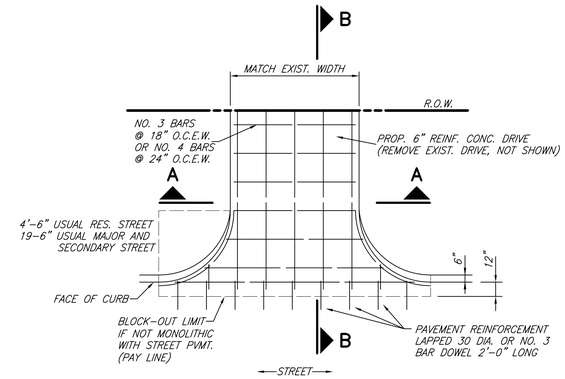

DRIVEWAY RETURN TO STREET

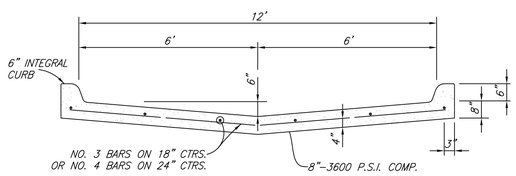

STANDARD ALLEY SECTION WITH CURBS

(STDALLEY)

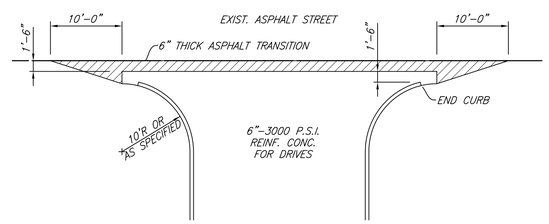

TYPICAL DRIVE OR STREET CONNECTION TO EXISTING ASPHALT STREET

(DRIVE_CON)

NOTE:
FINISHED GRADING WITHIN THE R.O.W. SHALL BE BROADCAST SEEDED. WHERE PROPOSED DRIVEWAY CONSTRUCTION GOES BEYOND THE R.O.W. AND INTO PRIVATE PROPERTY, THE FINISHED GRADING SHALL BE BLOCK SODDED TO RESTORE THE LANDSCAPING TO ITS PRE-CONSTRUCTION APPEARANCE.

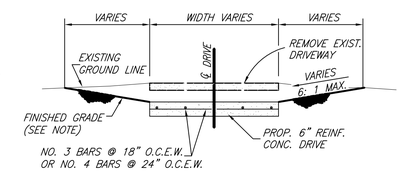

SECTION A-A

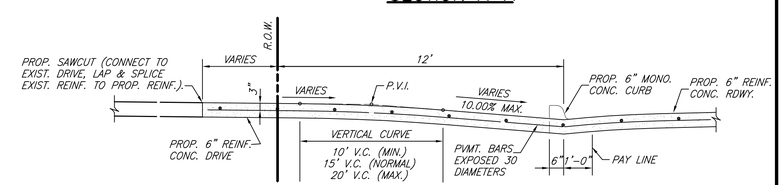

SECTION B-B

DRIVEWAY RETURN SECTIONS

(DRIVEDTL)

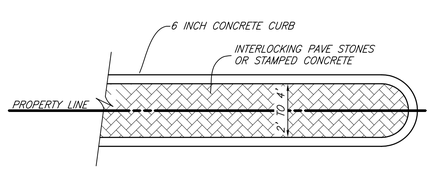

MEDIAN AT DRIVEWAYS SPLIT BY PROPERTY LINE

(DRIVEDTL3)

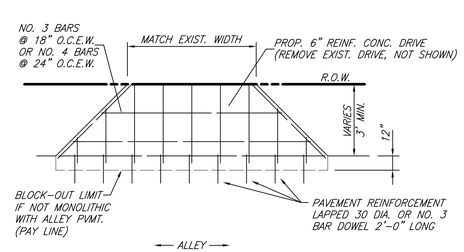

DRIVEWAY RETURN TO ALLEY

(DRIVEDTL2)

CITY OF CELINA, TEXAS

PAVING

STANDARD DETAILS CS5

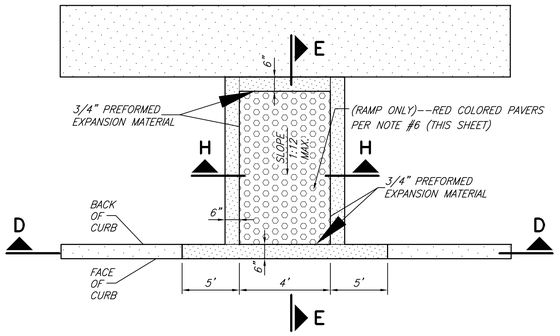

BARRIER FREE RAMP @ STRAIGHT CURB

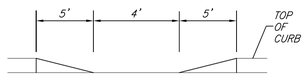

SECTION D–D

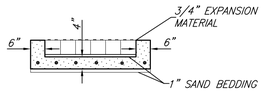

SECTION H–H

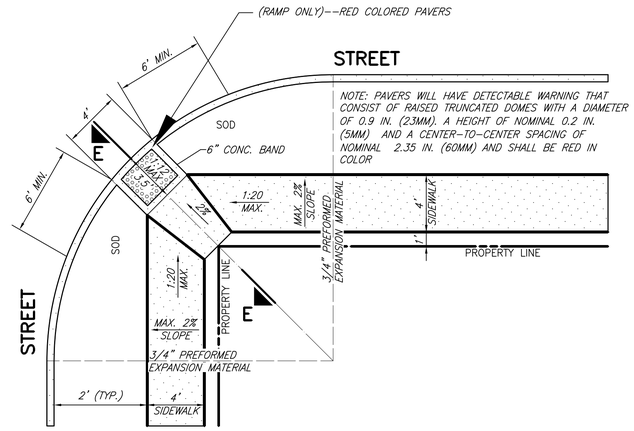

RAMP FOR 4 FEET SIDEWALK AWAY FROM CURB

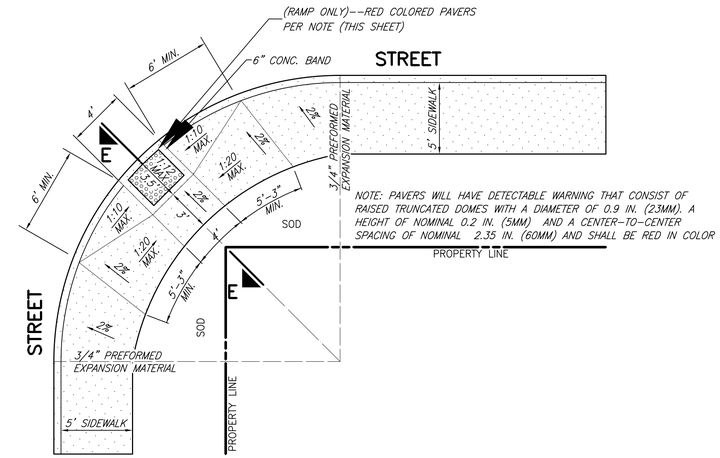

RAMP FOR 5 FEET SIDEWALK NEXT TO CURB

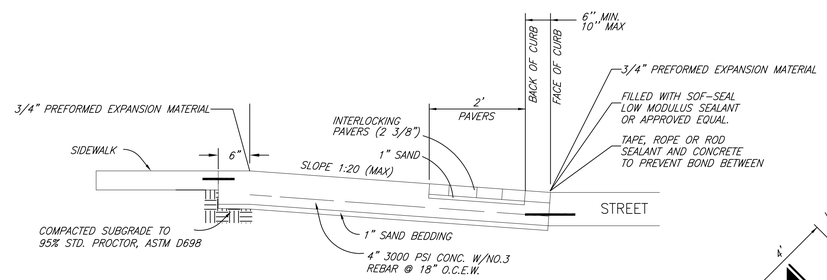

SECTION E–E

(BARRIER_FREE)

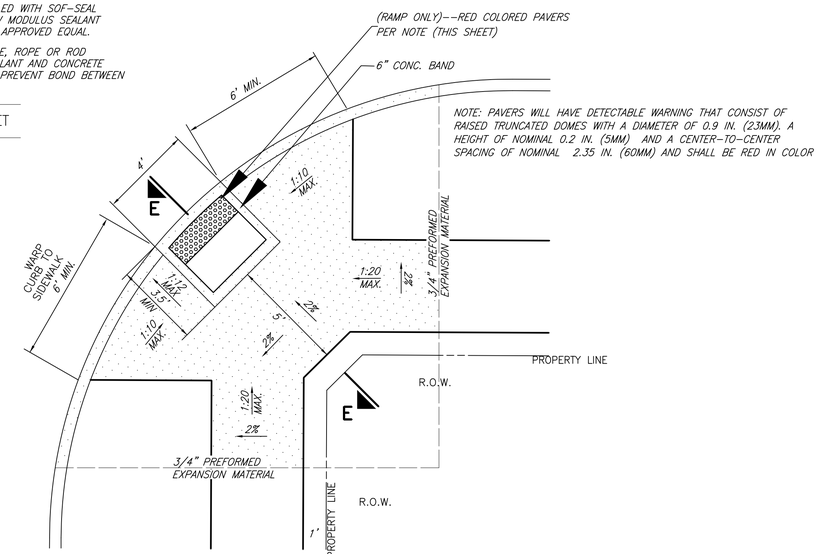

BARRIER FREE RAMP
STREET INTERSECTION
PLAN VIEW
NTS

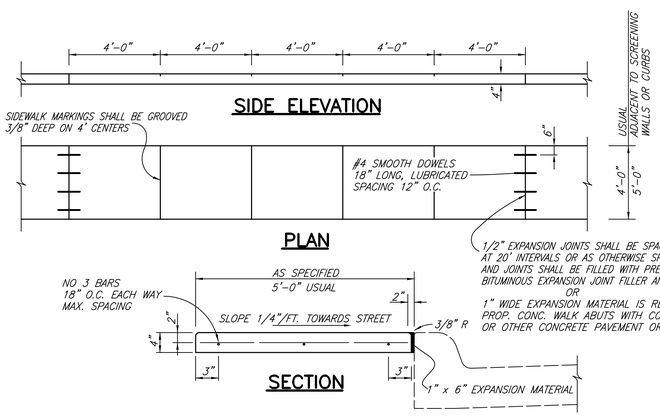

REINFORCED CONCRETE SIDEWALK

(SIDEWALK)

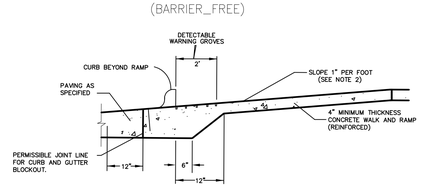

BARRIER FREE RAMP
TYPICAL SECTION THRU RESIDENTIAL RAMP
NTS

GENERAL NOTES:

1. BARRIER FREE RAMPS SHALL BE CONSTRUCTED AS EXTENSIONS OF STANDARD CONCRETE SIDEWALKS EXCEPT AS NOTED IN THESE DETAILS.
2. MAXIMUM SLOPE ON BARRIER FREE RAMPS SHALL NOT EXCEED 1" PER FOOT AT ANY LOCATION.
3. DESIGNS SHOWN ARE FOR 6" CURBS. FOR CURBS WITH HEIGHT GREATER THAN 6", DIMENSIONS SHALL BE INCREASED PROPORTIONATELY.
4. STREETS ON STEEP GRADE WILL REQUIRE LONGER TRANSITIONS ON UPGRADE SIDE.
5. LOCATION OF BARRIER FREE RAMP MAY BE SHIFTED TO CLEAR OBSTRUCTIONS WITH THE APPROVAL OF THE CITY ENGINEER.
6. ACCESS RAMP FROM STREET GRADE SHALL HAVE DETECTABLE WARNING GROVES THAT SHALL BE 1/4" TO 3/4" WIDE, 1/8" DEEP, SPACED 2" APART.
7. ALL LANDINGS ARE TO BE 5'X5' AREAS WITH 2% (MAX) SLOPES IN ANY DIRECTION

RAMP WITH DOMES

CITY OF CELINA, TEXAS

PAVING
STANDARD DETAILS – CS6

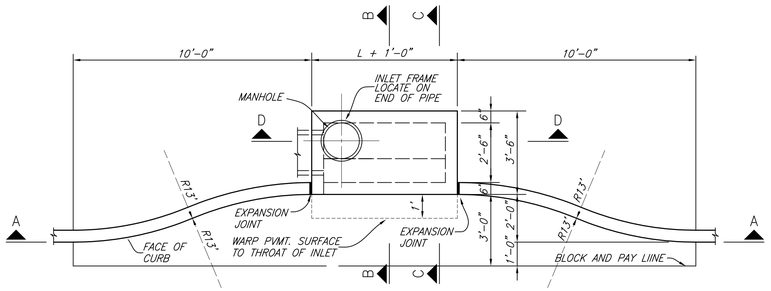

PLAN – RECESSED INLET

(REC–INT1)

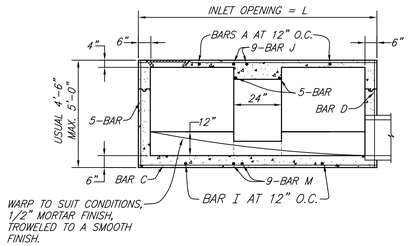

SECTION A–A – STANDARD AND RECESSED INLETS

(SECT_A–A1)

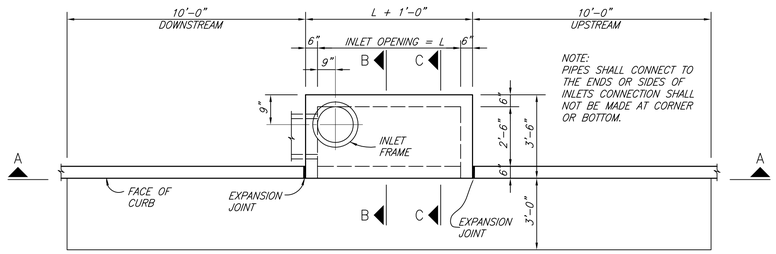

PLAN – STANDARD INLET

4, 6, 8 AND 10 FOOT INLETS

(STDINLT1)

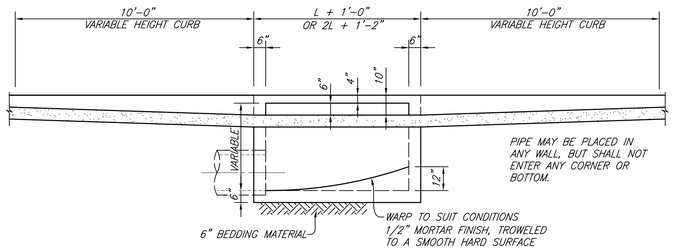

SECTION A–A–RECESSED AND STANDARD INLETS

4, 6, 8, AND 10 FOOT INLETS

(PLAN–10)

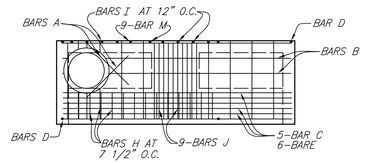

PLAN – STANDARD INLET

(PLAN_STDINL)

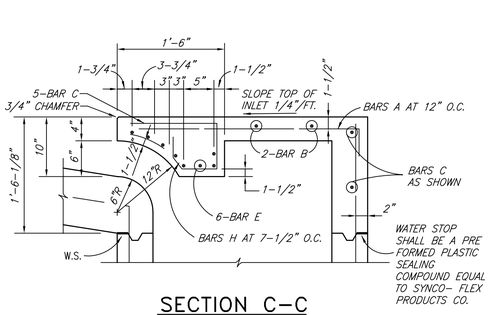

SECTION C–C

(SECT_C–C)

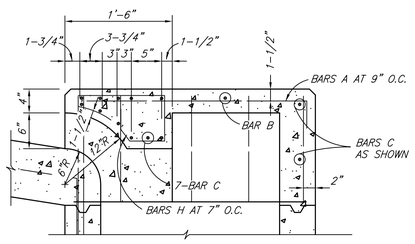

NOTE: FOR ADDITIONAL INFORMATION SEE SECTION C–C

SECTION E–E

(SECT_E–E)

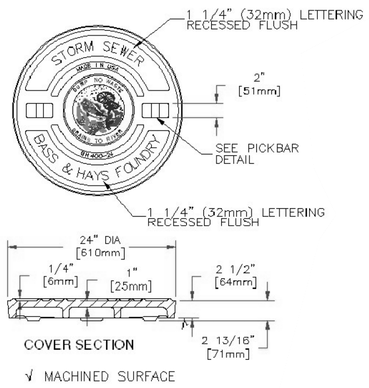

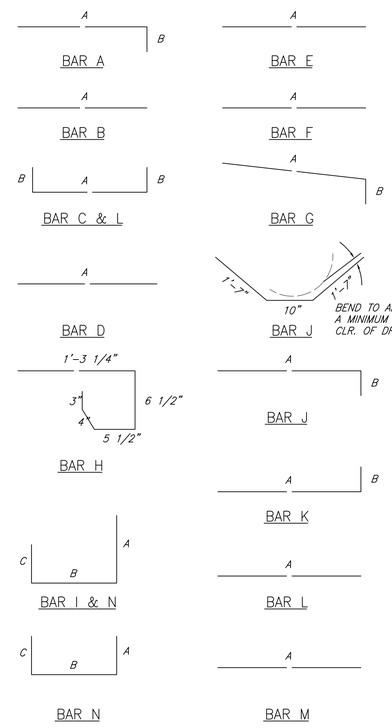

BAR DIAGRAMS

(BARDIAG)

REINFORCING STEEL SCHEDULE

DIMENSIONS SHOWN ARE FOR MAXIMUM SIZE INLETS

INLET LENGTH	BAR TYPE	BAR DIA. (1/8 IN.)	NO. REQ'D	BAR DIMENSIONS		
				A	B	C
4	A	3	6	3'–2"	0'–3"	–
	B	3	1	2'–10"	–	–
	C	4	15	4'–8"	0'–6"	–
	D	4	5	4'–8"	–	–
	F	4	1	3'–2"	–	–
	G	3	5	2'–0"	1'–3"	–
	H	3	6	*	*	*
	N	3	3	3'–2"	3'–2"	3'–2"
6	A	3	9	3'–2"	0'–3"	–
	B	3	1	4'–10"	–	–
	C	4	15	6'–8"	0'–6"	–
	D	4	5	4'–8"	–	–
	F	4	1	3'–2"	–	–
	G	3	5	2'–0"	1'–3"	–
	H	3	9	*	*	*
	N	3	3	3'–2"	3'–2"	3'–2"
8	A	3	12	3'–2"	0'–3"	–
	B	4	1	6'–10"	–	–
	C	4	15	8'–8"	0'–6"	–
	D	4	5	4'–8"	–	–
	F	4	1	3'–2"	–	–
	G	3	5	2'–0'	1'–3"	–
	H	3	12	*	*	*
	N	3	3	3'–2"	3'–2"	3'–2"
10	A	3	13	3'–2"	0'–3'	–
	B	3	2	8'–10"	–	–
	C	4	16	10'–8"	0'–6"	–
	D	4	4	4'–8"	–	–
	E	5	6	10'–8"	–	–
	G	3	5	2'–0"	1'–3"	–
	H	3	14	*	*	*
	I	4	8	4'–8"	3'–2"	3'–2"
	L	4	5	4'–3"	–	–

* SEE DIAGRAM FOR DIMENSIONS.
4', 6', 8' AND 10' INLETS

NOTES:

THE FLOOR OF THE EXCAVATION FOR INLET BOX MUST PROVIDE A FIRM, LEVEL BED FOR THE BASE SECTION TO REST UPON.

A MINIMUM OF 6 INCHES OF 1" DIAMETER (MAXIMUM) ROCK OR GRAVEL SHALL BE USED TO PREPARE THE BEDDING TO FINAL GRADE OR LIEU OF THIS, AT LEAST 6 INCHES OF 2–SACK CEMENT STABILIZED SAND SHALL BE USED TO PREPARE THE BEDDING TO GRADE. CEMENT STABILIZED–SAND SHALL BE ALLOWED TO SET BY KEEPING HOLE PUMPED DRY.

AFTER CASING HAS BEEN INSTALLED ON THE PROPER BEDDING, THE BACKFILL MATERIAL, WHICH IS FREE FLOWING AND CLEAR OF ROCKS, IN EXCESS OF 4" DIAMETER AND OTHER LUMPS WHICH WOULD PROHIBIT PROPER COMPACTION, SHALL BE COMMENCED IN LIFTS OF NO MORE THAN 18". THE MATERIAL USED FOR BACKFILL SHOULD BE A TYPE SUITABLE TO OBTAIN THE DENSITY REQUIREMENTS FOR THE SPECIFIC JOB.

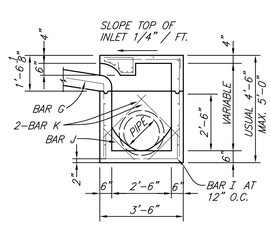

SECTION B–B

(SECT_B–B)

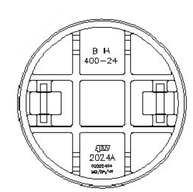

BOTTOM VIEW OF COVER

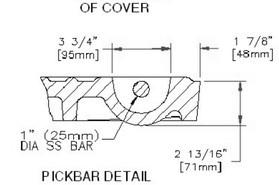

PICKBAR DETAIL

BH and Bass & Hays are registered trademarks of Bass & Hays Foundry, Inc.

CITY OF CELINA, TEXAS

DRAINAGE

STANDARD DETAILS – CS7

P-201312-01

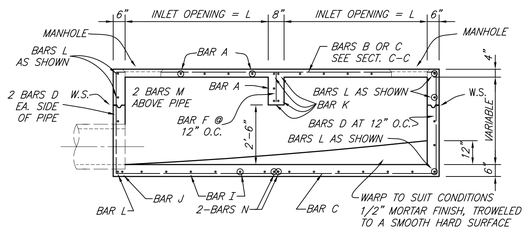

SECTION A–A

12, 14, 16 AND 20 FOOT INLETS

(SECT_A–A)

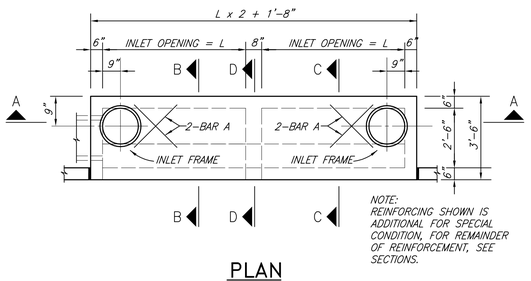

PLAN

20 FOOT INLETS

(PLAN_20)

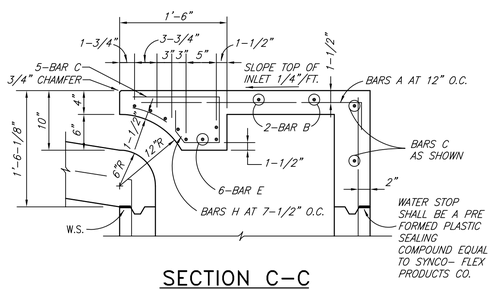

SECTION C–C

(SECT_C–C)

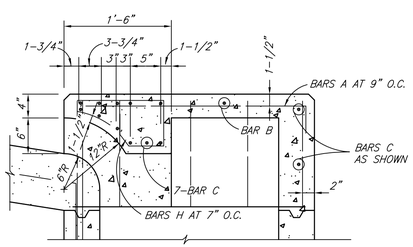

NOTE: FOR ADDITIONAL INFORMATION SEE SECTION C–C

SECTION D–D

(SECT_D–D)

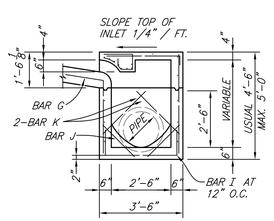

SECTION B–B

(SECT_B–B)

DOUBLE INLETS

DIMENSIONS SHOWN ARE FOR MAXIMUM SIZE INLETS

INLET LENGTH	BAR TYPE	BAR DIA. (1/8 IN.)	NO. REQ'D	BAR DIMENSIONS		
				A	B	C
6 FT.	A	3	15	3'-2"	0'-6"	–
	B	3	2	11'-6"	–	–
	C	4	16	13-4"	0'-6"	–
	D	4	9	4'-8"	–	–
	E	5	6	13-4"	–	–
	F	4	5	1'-2"	–	–
	G	3	12	2'-0"	1'-3"	–
	H	3	26	*	*	*
	I	4	12	4'-8"	3'-2"	3'-2"
	J	5	1	*	*	*
	K	5	6	3'-2"	0'-6"	–
	L	4	11	3'-2"	0'-6"	–
	M	4	2	3'-0" **	–	–
	N	4	2	4'-8"	3'-2"	4'-8"
7 FT.	A	3	17	3'-2"	0'-6"	–
	B	3	2	13'-6"	–	–
	C	4	16	15'-4"	0'-3'	–
	D	4	9	4'-8"	–	–
	E	5	6	15'-4"	–	–
	F	4	5	1'-2"	–	–
	G	3	15	2'-0"	1'-3"	–
	H	3	32	*	*	*
	I	4	14	4'-8"	3'-2"	3'-2"
	J	5	1	*	*	*
	K	5	6	3'-2"	0'-6"	–
	L	4	11	3'-2"	0'-6"	–
	M	4	2	3'-0" **	–	–
	N	4	2	4'-8"	3'-2"	4'-8"
8 FT.	A	3	19	3'-2"	0'-6"	–
	B	3	2	15'-6"	–	–
	C	4	16	17'-4"	0'-6"	–
	D	4	9	4'-8"	–	–
	E	5	6	17'-4"	–	–
	F	4	5	1'-2"	–	–
	G	3	12	2'-0"	1'-3"	–
	H	3	26	*	*	*
	I	4	16	4'-8"	3'-2"	3'-2"
	J	5	1	*	*	*
	K	5	6	3'-2"	0'-6"	–
	L	4	11	3'-2"	0'-6"	–
	M	4	2	3'-0" **	–	–
	N	4	2	4'-8"	3'-2"	4'-8"
10 FT.	A	3	23	3'-2"	0'-6"	–
	B	3	2	19'-6"	–	–
	C	4	16	21'-4"	0'-6"	–
	D	4	9	4'-8"	–	–
	E	5	6	21'-4"	–	–
	F	4	5	1'-2"	–	–
	G	3	15	2'-0"	1'-3"	–
	H	3	32	*	*	*
	I	4	20	4'-8"	3'-2"	3'-2"
	J	5	1	*	*	*
	K	5	6	3'-2"	0'-6"	–
	L	4	11	3'-2"	0'-6"	–
	M	4	2	3'-0" **	–	–
	N	4	2	4'-8"	3'-2"	4'-8"

* SEE DIAGRAM FOR DIMENSIONS.
** FIELD CUT AS REQUIRED TO ACCOMMODATE DRAIN PIPE 16' AND 20' INLETS

REINFORCING STEEL SCHEDULE

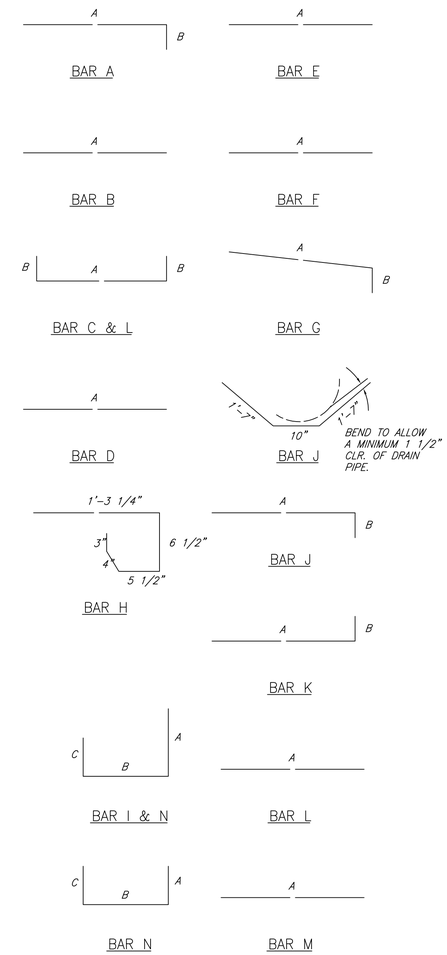

△ BEND TO ALLOW A MINIMUM 1 1/2" CIR. OF DRAIN PIPE
* SEE DIAGRAMS FOR DIMENSIONS
** FIELD CUT AS REQUIRED TO ACCOMODATE DRAIN PIPE

BAR BENDING DIAGRAMS

(BARLIST2)

CITY OF CELINA, TEXAS

DRAINAGE

STANDARD DETAILS – CS8

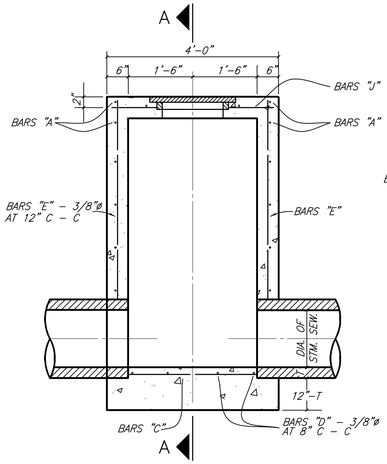

ELEVATION

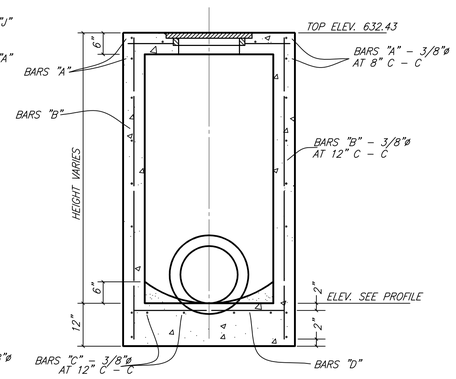

SECTION A–A

STORM SEWER TYPE A MANHOLE

MAX. PIPE SIZE 30"

(TYPEAMH)

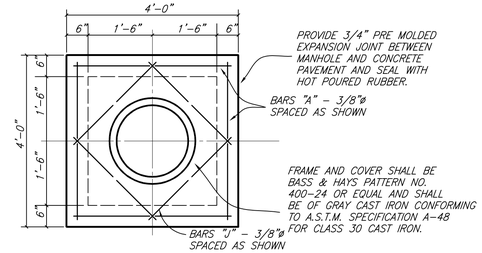

TOP PLAN

TYPE A & TYPE B

STORM SEWER MANHOLE

(MH_TOP)

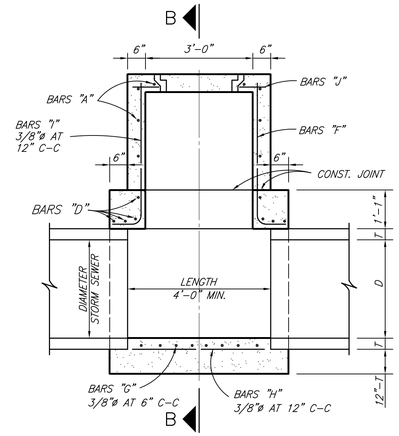

ELEVATION

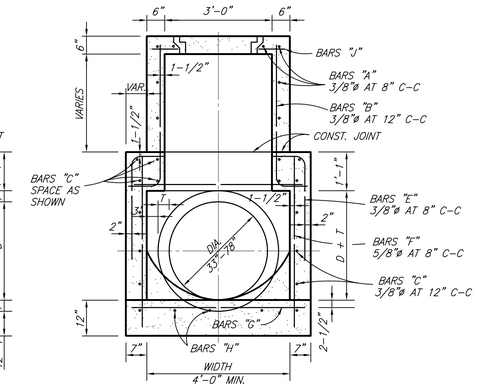

SECTION B–B

TYPE B STORM SEWER MANHOLE

MAX. PIPE SIZE 78"

(TYPEBMH)

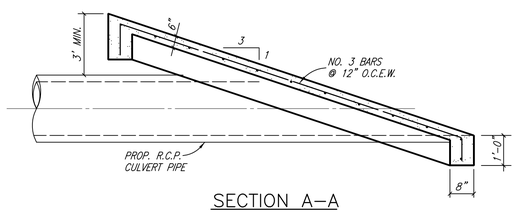

SECTION A–A

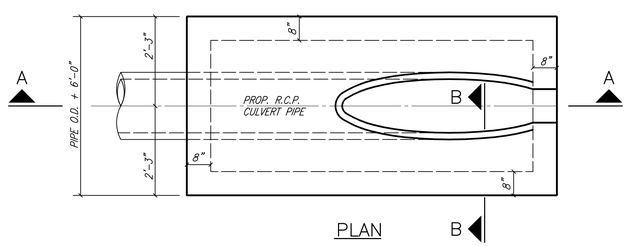

PLAN B

SLOPED CONCRETE HEADWALL

(SLOPEHWL)

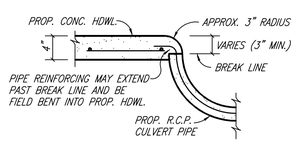

SECTION B–B

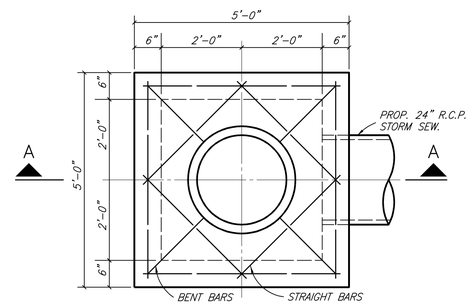

PLAN

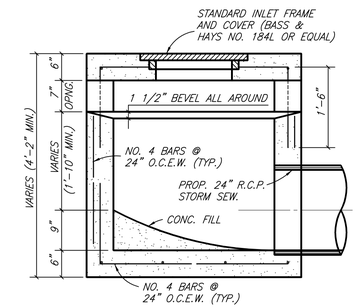

SECTION A–A

STANDARD DROP INLET

(DROPINLET)

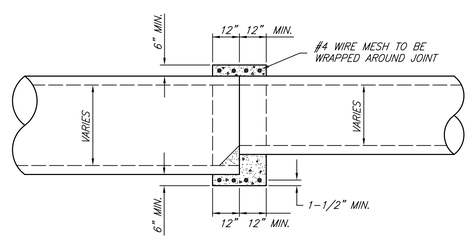

DETAIL OF CONCRETE COLLAR FOR R.C.P. OR R.C.A.P. CONNECTIONS

INSIDE JOINT SHALL BE CONCRETE MORTAR

(CONCCOL)

CITY OF CELINA, TEXAS

DRAINAGE

STANDARD DETAILS – CS9

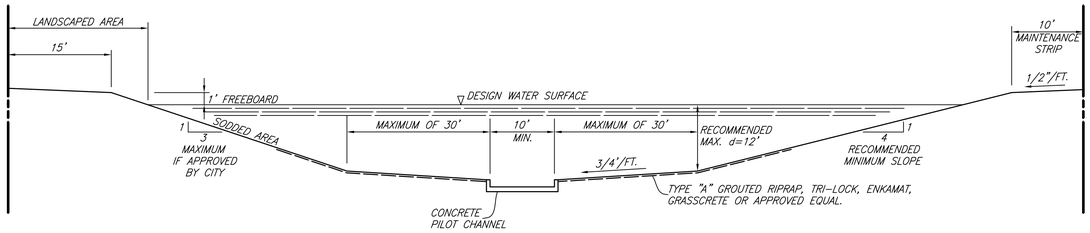

TYPICAL CHANNEL WITH REINFORCED CONCRETE LINED PILOT CHANNEL

(CHANNEL_SECT)

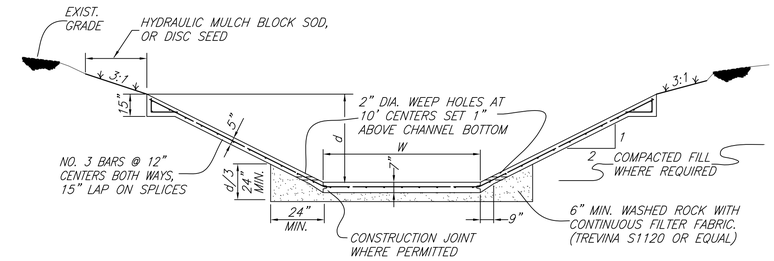

TYPICAL REINFORCED CONCRETE CHANNEL

(CHANNEL_CONC)

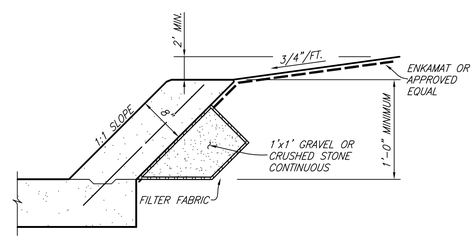

OPTIONAL (SLOPED WALL)

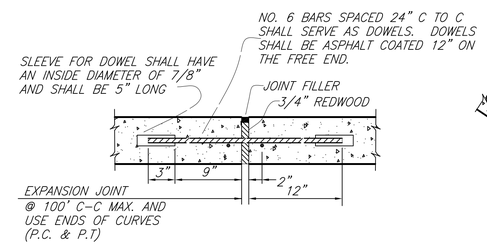

TRANSVERSE EXPANSION JOINT

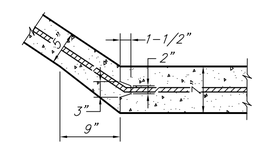

CONSTRUCTION JOINT

OPTIONAL

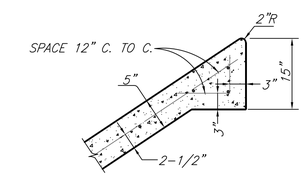

SLAB EDGE – DETAIL "A"

CONCRETE CHANNEL

(CHANNEL_DTLS)

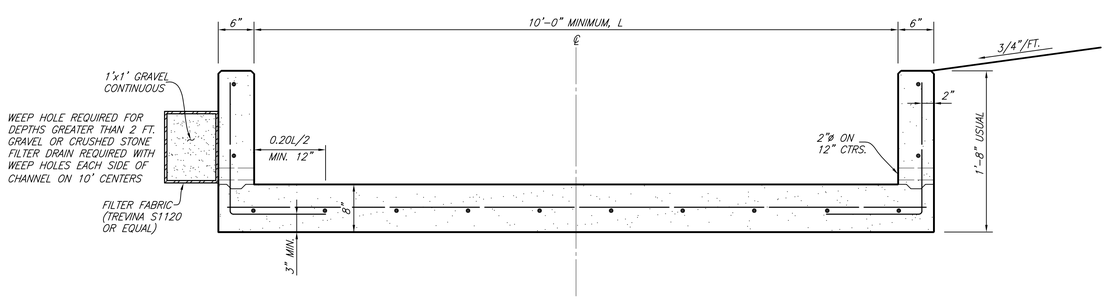

REINFORCED CONCRETE PILOT CHANNEL (VERTICAL WALL)

(CHANNEL_PILOT)

GENERAL NOTES FOR LINED CHANNELS

1. CONSTRUCTION JOINT SHOWN FOR CONVENIENCE ONLY, MONOLITHIC CONSTRUCTION MAY BE USED.
2. ALL VISIBLE SURFACES SHALL BE A TROWEL FINISH.
3. ALL REINFORCING STEEL SHALL BE 3/8" DIA. AND SPACED 12" CENTER TO CENTER BOTH WAYS UNLESS OTHERWISE SPECIFIED.
4. IF WOOD FORMS ARE USED WITH CONSTRUCTION JOINT, THEY SHALL BE TWO, 2"x4", AND SHALL NOT BE REMOVED UNTIL CONCRETE ON SLOPES IS READY TO BE PLACED.
5. ALL CONCRETE IN LINED CHANNEL SHALL BE NCTCOG CLASS "A" (MIN. 3000 P.S.I.) CONCRETE.
6. FLAT BOTTOM TO BE CONSTRUCTED WHEN CHANNEL WIDTH IS LESS THAN 12 FOOT.
7. 3/4" CHAMFER ON ALL CONCRETE CORNERS.

(GEN_CHANNELNOTE)

CITY OF CELINA, TEXAS

DRAINAGE

STANDARD DETAILS CS10

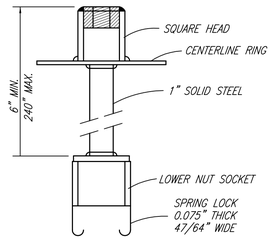

SPRING LOCK VALVE EXTENSION

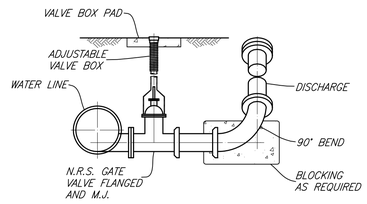

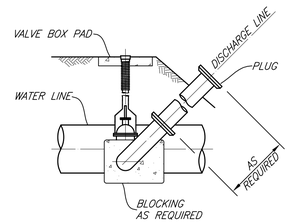

BLOW OFF VALVE

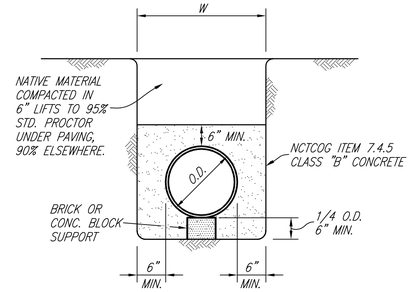

CLASS G EMBEDMENT

CONCRETE ENCASEMENT
NO SCALE

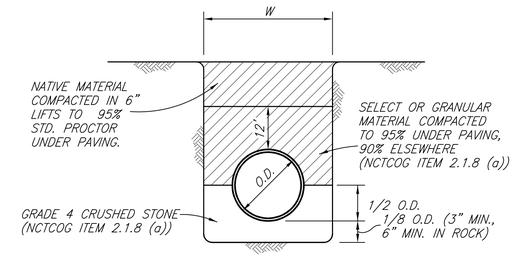

CLASS B+ EMBEDMENT

STD PVC WATER

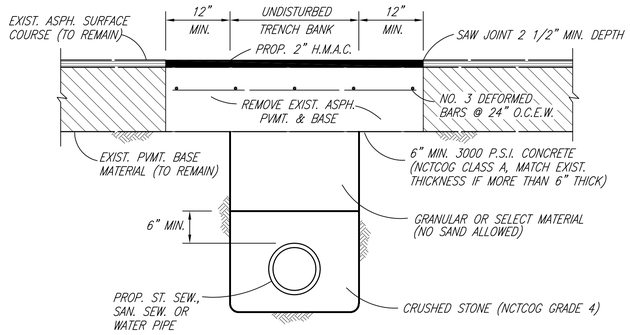

ASPHALT STREET REPAIR

NO SCALE

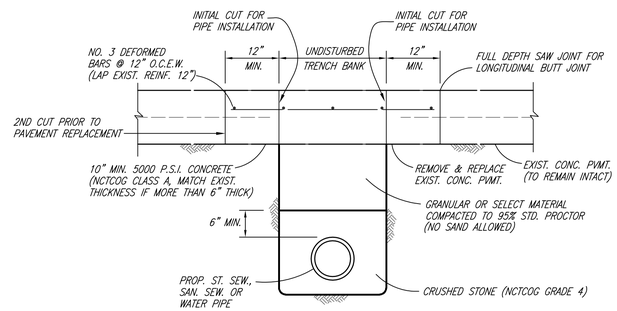

CONCRETE STREET REPAIR

NO SCALE

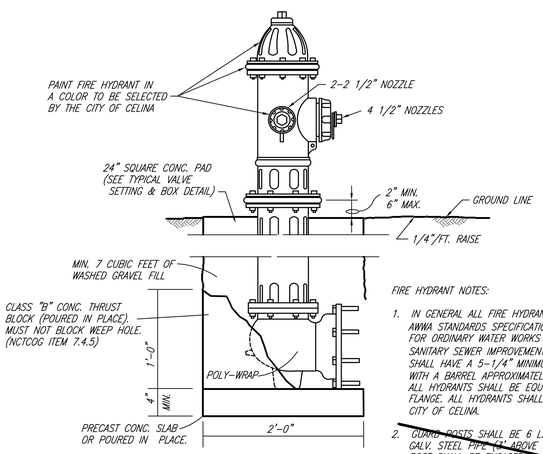

FIRE HYDRANT NOTES:

1. IN GENERAL ALL FIRE HYDRANTS SHALL CONFORM TO AWWA STANDARDS SPECIFICATIONS FOR FIRE HYDRANTS FOR ORDINARY WATER WORKS SERVICE FOR WATER AND SANITARY SEWER IMPROVEMENTS. FIRE HYDRANTS SHALL HAVE A 5-1/4" MINIMUM VALVE OPENING AND WITH A BARREL APPROXIMATELY 7" INSIDE DIAMETER. ALL HYDRANTS SHALL BE EQUIPPED WITH A BREAKAWAY FLANGE. ALL HYDRANTS SHALL BE APPROVED BY THE CITY OF CELINA.
2. ~~GUARD POSTS SHALL BE 6 L.F. OF 6" DIA. HOT DIPPED GALV. STEEL PIPE (4' ABOVE & BELOW GROUND LEVEL). POST SHALL BE ENCASED IN 6" DIA. CONC. PIER TO A DEPTH OF 12" BELOW POST BOTTOM. REINFORCE CONC. PIER WITH 2 NO. 6 BARS (12" LONG) THRU POST INTO PIER.~~

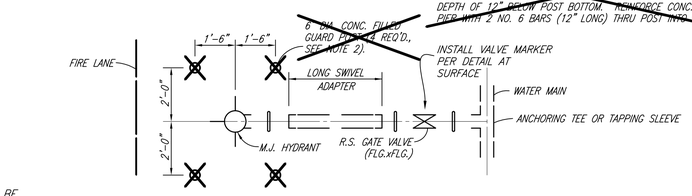

TYPICAL FIRE HYDRANT INSTALLATION

NO SCALE

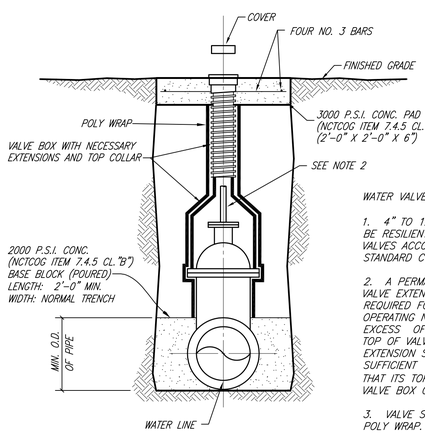

VALVE SETTING & BOX

NO SCALE

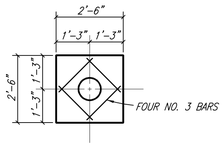

VALVE BOX PAD PLAN

NO SCALE

WATER VALVE NOTES:

1. 4" TO 12" GATE VALVE SHALL BE RESILIENT SEATED WEDGE GATE VALVES ACCORDANCE WITH AWWA STANDARD C-509.

2. A PERMANENTLY ATTACHED VALVE EXTENSION STEM SHALL BE REQUIRED FOR ANY VALVE WHOSE OPERATING NUT IS LOCATED IN EXCESS OF 4 FEET BELOW THE TOP OF VALVE BOX. THIS EXTENSION SHALL BE OF SUFFICIENT LENGTH TO INSURE THAT ITS TOP IS WITHIN 4" OF THE VALVE BOX COVER.

3. VALVE SHALL BE WRAPPED IN POLY WRAP.

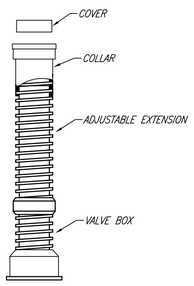

VALVE BOX WITH EXTENSION

NO SCALE

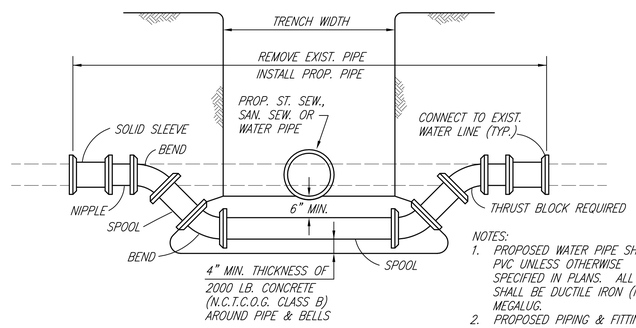

NOTES:

1. PROPOSED WATER PIPE SHALL BE PVC UNLESS OTHERWISE SPECIFIED IN PLANS. ALL FITTINGS SHALL BE DUCTILE IRON (M.J.-P.E.) MEGALUG.
2. PROPOSED PIPING & FITTINGS ARE SYMMETRIC ABOUT CENTER OF PROP. SAN. SEW. OR ST. SEW. PIPE AND SHALL RETAIN TEST PRESSURES.
3. ALL THRUST BLOCKING SHALL BE SUBSIDIARY TO UNIT PRICE.
4. CROSSING OF SANITARY SEWER SHALL BE IN ACCORDANCE WITH T.N.R.C.C. REQUIREMENTS. (CHAPTER 317.13 APPENDIX E)

WATER MAIN LOWERING

CITY OF CELINA, TEXAS

WATER DISTRIBUTION SYSTEM

STANDARD DETAILS – CS11

P-201312-01

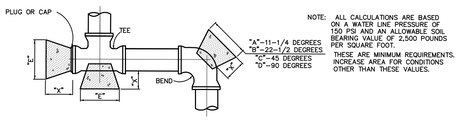

NOTE: ALL CALCULATIONS ARE BASED ON A WATER LINE PRESSURE OF 150 PSI AND AN ALLOWABLE SOIL BEARING VALUE OF 2,500 POUNDS PER SQUARE FOOT.

THESE ARE MINIMUM REQUIREMENTS. INCREASE AREA FOR CONDITIONS OTHER THAN THESE VALUES.

HORIZONTAL BLOCKING TABLE

PIPE SIZE	"X" DIM. IN. FT.	11-1/4 DEGREES		22-1/2 DEGREES		45 DEGREES		90 DEGREES		TEE & PLUG	
		"A"	MIN. AREA	"B"	MIN. AREA	"C"	MIN. AREA	"D"	MIN. AREA	"E"	MIN. AREA
4"	1.5	1.00	1.00	1.00	1.00	1.00	1.00	1.00	1.06	1.00	1.00
6"	1.5	1.00	1.00	1.00	1.00	1.14	1.30	1.55	2.40	1.30	1.70
8"	1.5	1.00	1.00	1.08	1.18	1.52	2.31	2.07	4.27	1.74	3.02
10"	1.5	1.00	1.00	1.35	1.84	1.90	3.61	2.58	6.66	2.17	4.71
12"	1.5	1.00	1.33	1.63	2.65	1.86	5.19	3.10	9.60	2.61	6.79
14"	1.5	1.03	1.81	1.90	3.60	2.66	7.07	3.61	13.06	3.04	9.24
16"	2.0	1.18	2.36	2.17	4.71	3.04	9.23	4.13	17.06	3.47	12.06
18"	2.0	1.33	2.99	2.44	5.96	3.42	11.69	4.65	21.59	3.91	15.27
20"	2.0	1.48	3.70	2.71	7.35	3.80	14.43	5.16	26.66	4.34	18.85
21"	2.0	1.55	4.07	2.85	8.11	3.99	15.91	5.42	29.39	4.56	20.78
24"	2.0	1.77	5.32	3.25	10.59	4.56	20.77	6.20	38.39	5.21	27.14
27"	2.5	1.99	6.73	3.66	13.40	5.13	26.29	6.97	48.58	5.86	34.35
30"	2.5	2.22	8.31	4.07	16.55	5.70	32.46	7.74	59.98	6.51	42.41
33"	2.5	2.44	10.06	4.47	20.02	6.27	39.28	8.52	72.57	7.16	51.31
36"	2.5	2.66	11.97	4.88	23.83	6.84	46.74	9.29	86.37	7.81	61.07
39"	3.0	2.88	14.05	5.29	27.97	7.41	54.86	10.07	101.36	8.47	71.68
42"	3.0	3.10	16.30	5.69	32.43	7.98	63.62	10.85	117.56	9.12	83.13

NOTE: CLASS "B" CONCRETE 2,000 PSI SHALL BE USED FOR ALL BLOCKING UNLESS OTHERWISE NOTED ON STANDARD DETAILS AND / OR PLANS.

THE MINIMUM VERTICAL DIMENSION OF ALL BLOCKING SHALL BE 1.5 TIMES THE PIPE DIAMETER WITH AT LEAST 0.75 TIMES THE PIPE DIAMETER EXTENDING BOTH ABOVE AND BELOW THE PIPE CENTERLINE. THIS DIMENSION DETERMINES THE "A" DIMENSION FOR 11-1/4" BENDS.

FOR 22-1/2 ° 45 ,° 90 ° AND TEES AND PLUGS, THE VERTICAL DIMENSION SHALL BE EQUAL TO THE HORIZONTAL DIMENSION SHOWN TO PRODUCE THE REQUIRED MINIMUM AREA.

ALL MINIMUM AREAS ARE IN SQUARE FEET.

BLOCKING TO BE AGAINST UNDISTURBED TRENCH WALLS AND BOTTOM.

HORIZONTAL THRUST BLOCKING DETAIL

NO SCALE

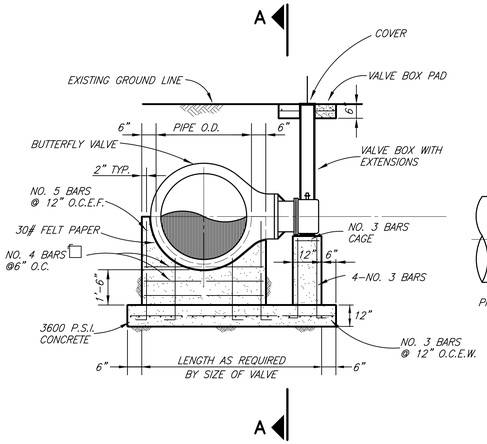

SECTION B–B

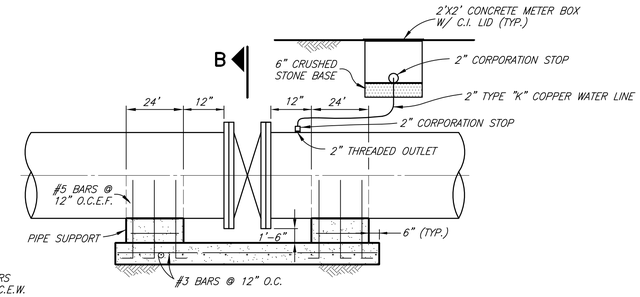

SECTION A–A

BUTTERFLY VALVE INSTALLATION

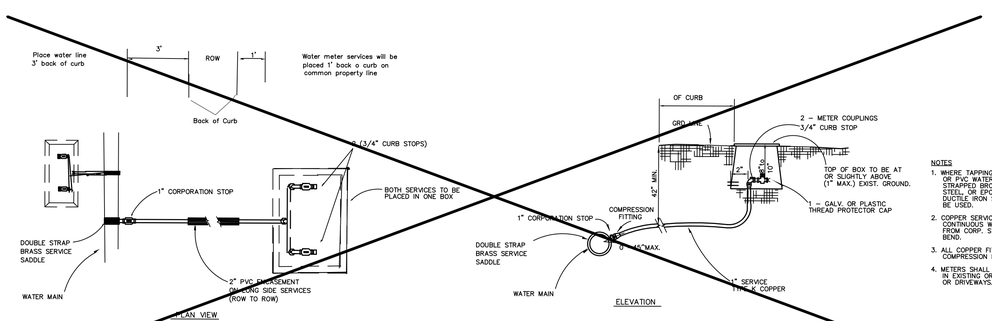

NOTES

1. WHERE TAPPING EXISTING MAINS OR PVC WATER MAINS, DOUBLE STRAPPED BRONZE, STAINLESS STEEL, OR EPOXY COATED DUCTILE IRON SADDLES SHALL BE USED.
2. COPPER SERVICES SHALL BE TYPE K CONTINUOUS WITH NO JOINTS FROM CORP. STOP TO QUARTER BEND.
3. ALL COPPER FITTINGS SHALL BE COMPRESSION FITTINGS.
4. METERS SHALL NOT BE INSTALLED IN EXISTING OR PROPOSED SIDEWALK OR DRIVEWAYS.

SERVICE CONNECTION DETAIL (LOTS SMALLER THAN10,000 S.F.)

NO SCALE

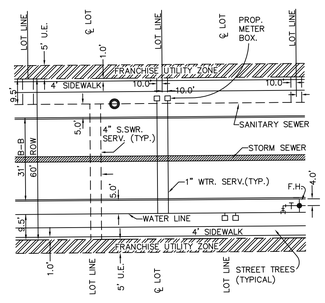

UTILITY PLACEMENT DETAIL

NO SCALE

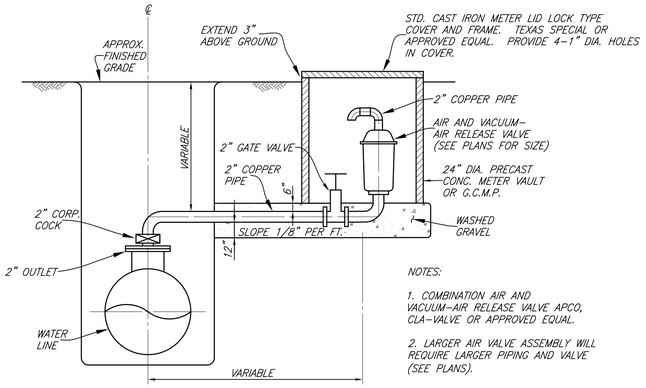

NOTES:

1. COMBINATION AIR AND VACUUM-AIR RELEASE VALVE APCO, CLA-VALVE OR APPROVED EQUAL.
2. LARGER AIR VALVE ASSEMBLY WILL REQUIRE LARGER PIPING AND VALVE (SEE PLANS).

AIR AND VACUUM – AIR RELEASE VALVE INSTALLATION

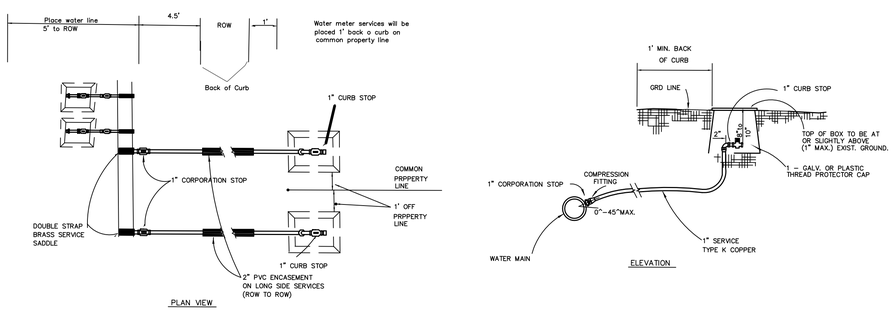

NOTES

1. WHERE TAPPING EXISTING MAINS OR PVC WATER MAINS, DOUBLE STRAPPED BRONZE, STAINLESS STEEL, OR EPOXY COATED DUCTILE IRON SADDLES SHALL BE USED.
2. COPPER SERVICES SHALL BE CONTINUOUS WITH NO JOINTS FROM CORP. STOP TO QUARTER BEND.
3. ALL COPPER FITTINGS SHALL BE COMPRESSION FITTINGS.
4. METERS SHALL NOT BE INSTALLED IN EXISTING OR PROPOSED SIDEWALK OR DRIVEWAYS.

SERVICE CONNECTION DETAIL (LOTS10,000 S.F. OR LARGER)

NO SCALE

BORING NOTES:

1. 2 MORTAR BANDS FOR R.C.C.P. AND CEMENT LINED & COATED STEEL PIPE MAY BE USED IN LIEU OF SKIDS & STRAPS.
2. CONTRACTOR SHALL PROVIDE SUPPORT UNDER CARRIER PIPE TO HAVE MIN. 1" CLEARANCE BETWEEN PIPE BELL AND ENCASEMENT PIPE.
3. ENDS OF ENCASEMENT PIPE SHALL BE PLUGGED WITH BRICK AND MORTAR FOR ROADWAY CROSSINGS AND CLAY FOR RAILROAD CROSSINGS.

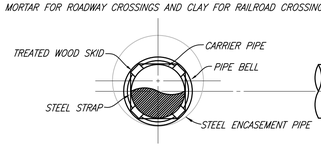

SECTION

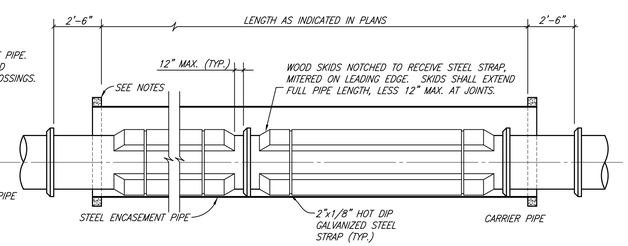

ELEVATION

ENCASED ROAD OR RAILROAD BORE

CITY OF CELINA, TEXAS

WATER DISTRIBUTION SYSTEM

STANDARD DETAILS – CS12

DISCLAIMER: The use of this standard is governed by the "Texas Engineering Practice Act". No warranty of any kind is made by TxDOT for any purpose whatsoever. TxDOT assumes no responsibility for the conversion of this standard to other formats or for incorrect results or damages resulting from its use.

TYPE III BARRICADES

1. Refer to the Compliant Work Zone Traffic Control Devices List (CWZTCD) for details of the Type III Barricades and a list of all materials used in the construction of Type III Barricades.
2. Type III Barricades shall be used at each end of construction projects closed to all traffic.
3. Barricades extending across a roadway should have stripes that slope downward in the direction toward which traffic must turn in detouring. When both right and left turns are provided, the chevron striping may slope downward in both directions from the center of the barricade. Where no turns are provided at a closed road striping should slope downward in both directions toward the center of roadway.
4. Striping of rails, for the right side of the roadway, should slope downward to the left. For the left side of the roadway, striping should slope downward to the right.
5. Identification markings may be shown only on the back of the barricade rails. The maximum height of letters and/or company logos used for identification shall be 1".
6. Barricades shall not be placed parallel to traffic unless an adequate clear zone is provided.
7. Warning lights shall NOT be installed on barricades.
8. Where barricades require the use of weights to keep from turning over, the use of sandbags with dry, cohesionless sand is recommended. The sandbags will be tied shut to keep the sand from spilling and to maintain a constant weight. Sand bags shall not be stacked in a manner that covers any portion of a barricade rails reflective sheeting. Rock, concrete, iron, steel or other solid objects will NOT be permitted. Sandbags should weigh a minimum of 35 lbs and a maximum of 50 lbs. Sandbags shall be made of a durable material that tears upon vehicular impact. Rubber (such as tire inner tubes) shall not be used for sandbags. Sandbags shall only be placed along or upon the base supports of the device and shall not be suspended above ground level or hung with rope, wire, chains or other fasteners.
9. Sheeting for barricades shall be retroreflective Type C (High Specific Intensity) conforming to Departmental Material Specification DMS-8300 unless otherwise noted.

Barricades shall NOT be used as a sign support.

TYPICAL STRIPING DETAIL FOR BARRICADE RAIL

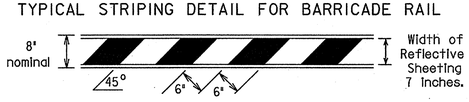

TYPICAL PANEL DETAIL FOR SKID OR POST TYPE BARRICADES

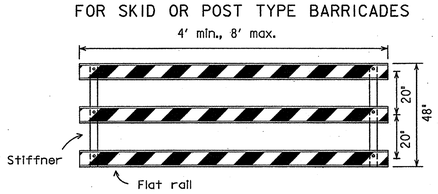

Stiffner may be inside or outside of support, but no more than 2 stiffeners shall be allowed on one barricade.

TYPE III BARRICADE (POST AND SKID) TYPICAL APPLICATION

Each roadway of a divided highway shall be barricaded in the same manner.

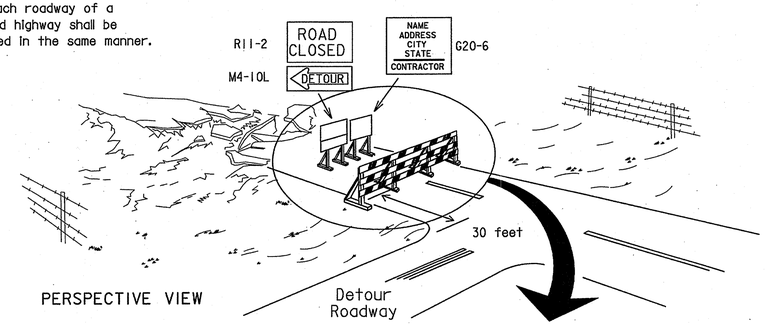

PERSPECTIVE VIEW

The three rails on Type III barricades shall be reflectorized orange and reflective white stripes on one side facing one-way traffic and both sides for two-way traffic.

Barricade striping should slant downward in the direction of detour.

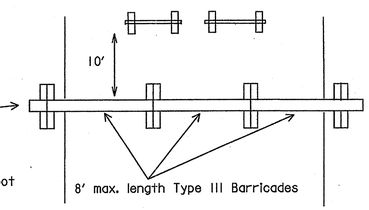

PLAN VIEW

1. Signs should be mounted on independent supports at a 7 foot mounting height in center of roadway. The signs should be a minimum of 10 feet behind Type III Barricades.
2. Advance signing shall be as specified elsewhere in the plans.

CULVERT WIDENING OR OTHER ISOLATED WORK WITHIN THE PROJECT LIMITS

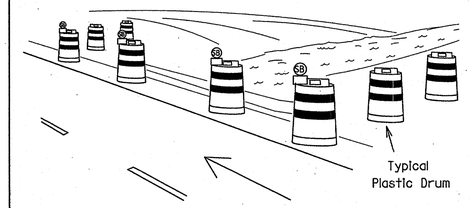

PERSPECTIVE VIEW

1. Where positive redirectional capability is provided, drums may be omitted.
2. Plastic construction fencing may be used with drums for safety as required in the plans.
3. Vertical Panels on flexible support may be substituted for drums when the shoulder width is less than 4 feet.
4. When the shoulder width is greater than 12 feet, steady-burn lights may be omitted if drums are used.
5. Drums must extend the length of the culvert widening.

These drums are not required on one-way roadway

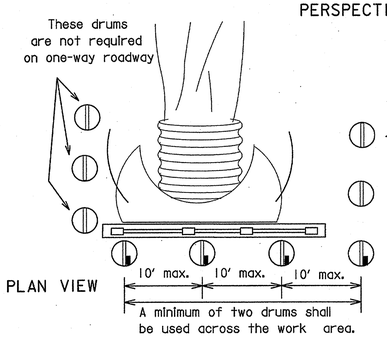

PLAN VIEW

Increase number of plastic drums on the side of approaching traffic if the crown width makes it necessary. (minimum of 2 and maximum of 4 drums)

Legend

- Plastic drum
- Plastic drum with steady burn light or yellow warning reflector
- (SB) Steady burn warning light or yellow warning reflector

CONES

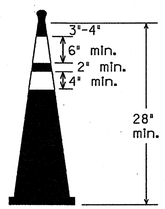

Two-Piece cones

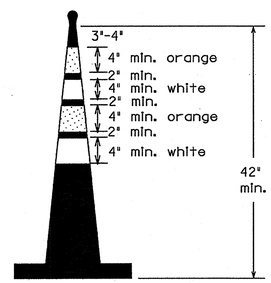

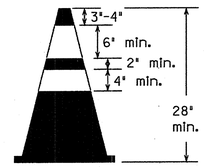

One-Piece cones

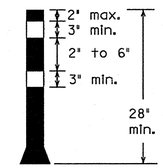

Tubular Marker

28" Cones shall have a minimum weight of 9 1/2 lbs.

42" 2-piece cones shall have a minimum weight of 30 lbs. including base.

1. Traffic cones and tubular markers shall be a minimum of 28 inches in height when used either on freeways or at nighttime.
2. Cones or tubular markers shall be predominantly orange, fluorescent red-orange, or fluorescent yellow-orange. They should be kept clean and bright for maximum visibility.
3. Cones used only for daytime operations do not require the reflectorized bands.
4. Cones and tubular markers used for nighttime operations shall be reflectorized. Reflectorized material shall have a smooth, sealed outer surface that displays the same approximate color during the day and night. The reflectorized bands shall be retroreflective Type C (High Specific Intensity) conforming to Departmental Material Specification DMS-8300, unless otherwise noted.
5. When used at night, appropriate personnel shall ensure that cones and tubular markers remain in their proper location and in an upright position.
6. Reflectorization of 28"cones shall consist of a minimum 6 inch band placed at least 3 inches but not more than 4 inches from the top, supplemented by a minimum 4 inch band spaced a minimum of 2 inches below the 6 inch band.
7. Reflectorization of 42" cones shall be provided by alternating 4 to 6" orange and white stripes with orange on top.
8. Reflectorization of tubular markers shall be a minimum of two 3 inch bands placed a maximum of 2 inches from the top with a maximum of 6 inches between bands.
9. One-piece cones or tubular markers are generally suitable for temporary usage (up to 8 hours) with other channelization devices such as vertical panels, drums or two-piece cones for long term usage. Care should be taken to ensure they remain in their proper location and in an upright position.
10. Cones or tubular markers used on each project shall be of the same size and shape.
11. The handle may be designed as a hook or other shape, fabricated from non-rigid materials similar to the cone material, and may extend up to a maximum of 8 inches above the top of cone. Length of the handle shall not be considered with regard to the overall height of the cone.

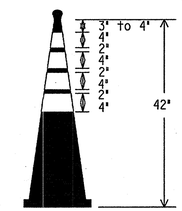

EDGELINE CHANNELIZER

1. This device is intended only for use in place of a vertical panel to channelize traffic by indicating the edge of the travel lane. It is not intended to be used in transitions or tapers.
2. This device shall not be used to separate lanes of traffic (opposing or otherwise) or warn of objects.
3. This device is based on a 42 inch, two-piece cone with an alternate striping pattern: four 4 inch retroreflective bands, with an approximate 2 inch gap between bands. The color of the band should correspond to the color of the edgeline (yellow for left edgeline, white for right edgeline) for which the device is substituted or for which it supplements. The reflectorized bands shall be retroreflective Type C encapsulated bead (High Specific Intensity) conforming to Departmental Material Specification DMS-8300, unless otherwise noted.
4. The base must weigh a minimum of 30 lbs.

TRAFFIC CONTROL FOR MATERIAL STOCKPILES

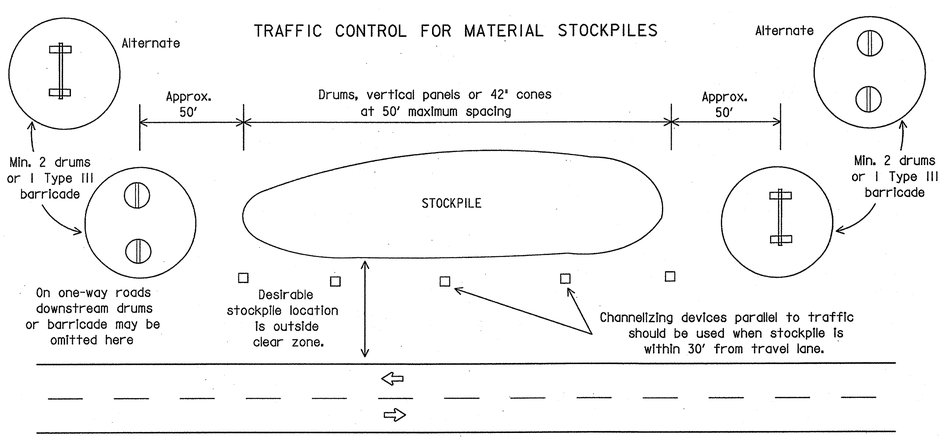

Texas Department of Transportation
Traffic Operations Division

BARRICADE AND CONSTRUCTION CHANNELIZING DEVICES STANDARD

10 of 12 BC(10)-07

©TxDOT 11-4-02	DN: TXDOT	CK: TXDOT	DW: TXDOT	CK: TXDOT
9-07 REVISIONS	CONT	SECT	JOB	HIGHWAY
	DIST		COUNTY	SHEET NO.

109A

DATE:
FILE:

P-201312-01

DISCLAIMER: The use of this standard is governed by the "Texas Engineering Practice Act". No warranty of any kind is made by TxDOT for any purpose whatsoever. TxDOT assumes no responsibility for the conversion of this standard to other formats or for incorrect results or damages resulting from its use.

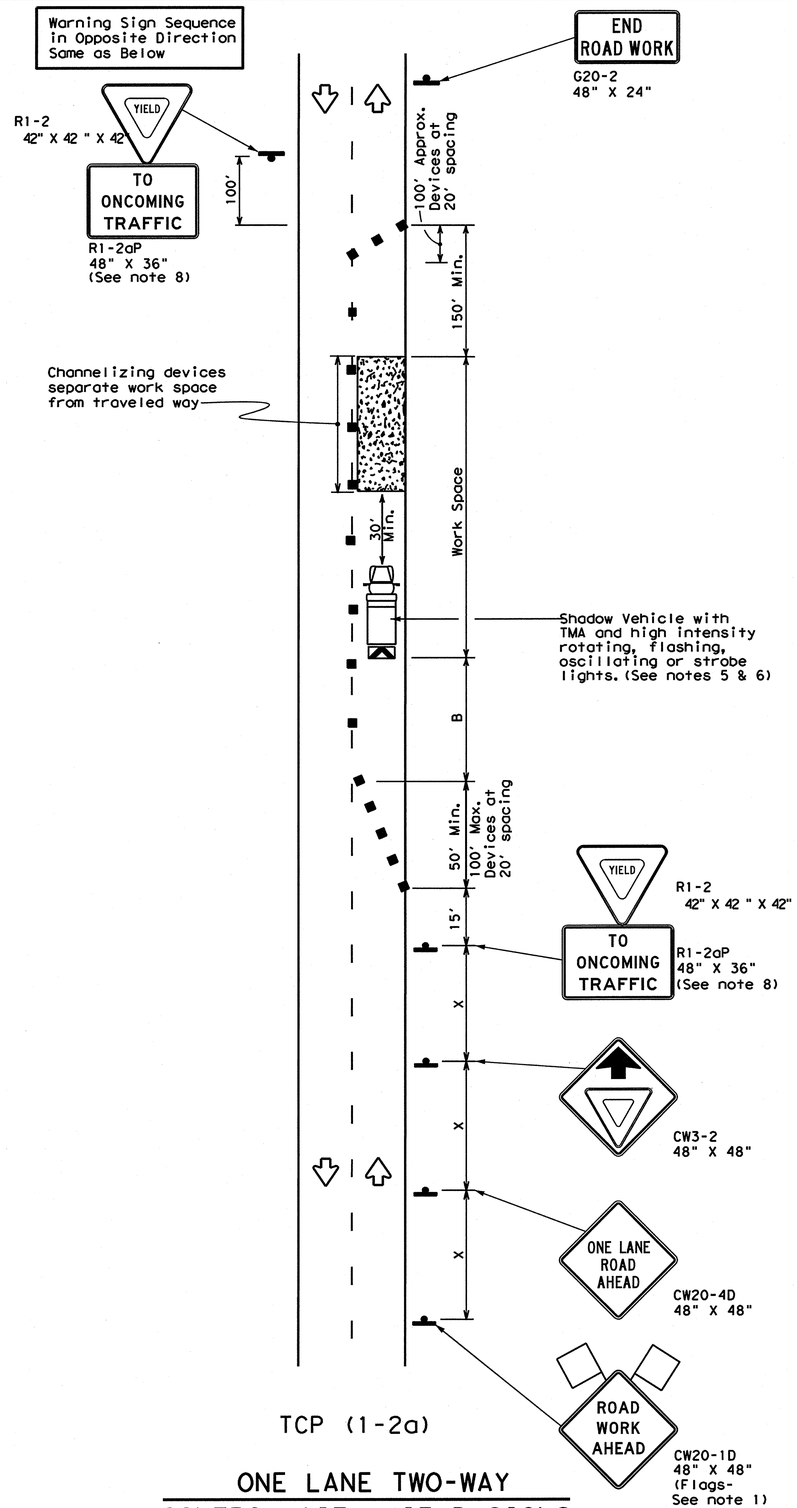

TCP (1-2a)

ONE LANE TWO-WAY CONTROL WITH YIELD SIGNS

(Less than 2000 ADT - See note 7)

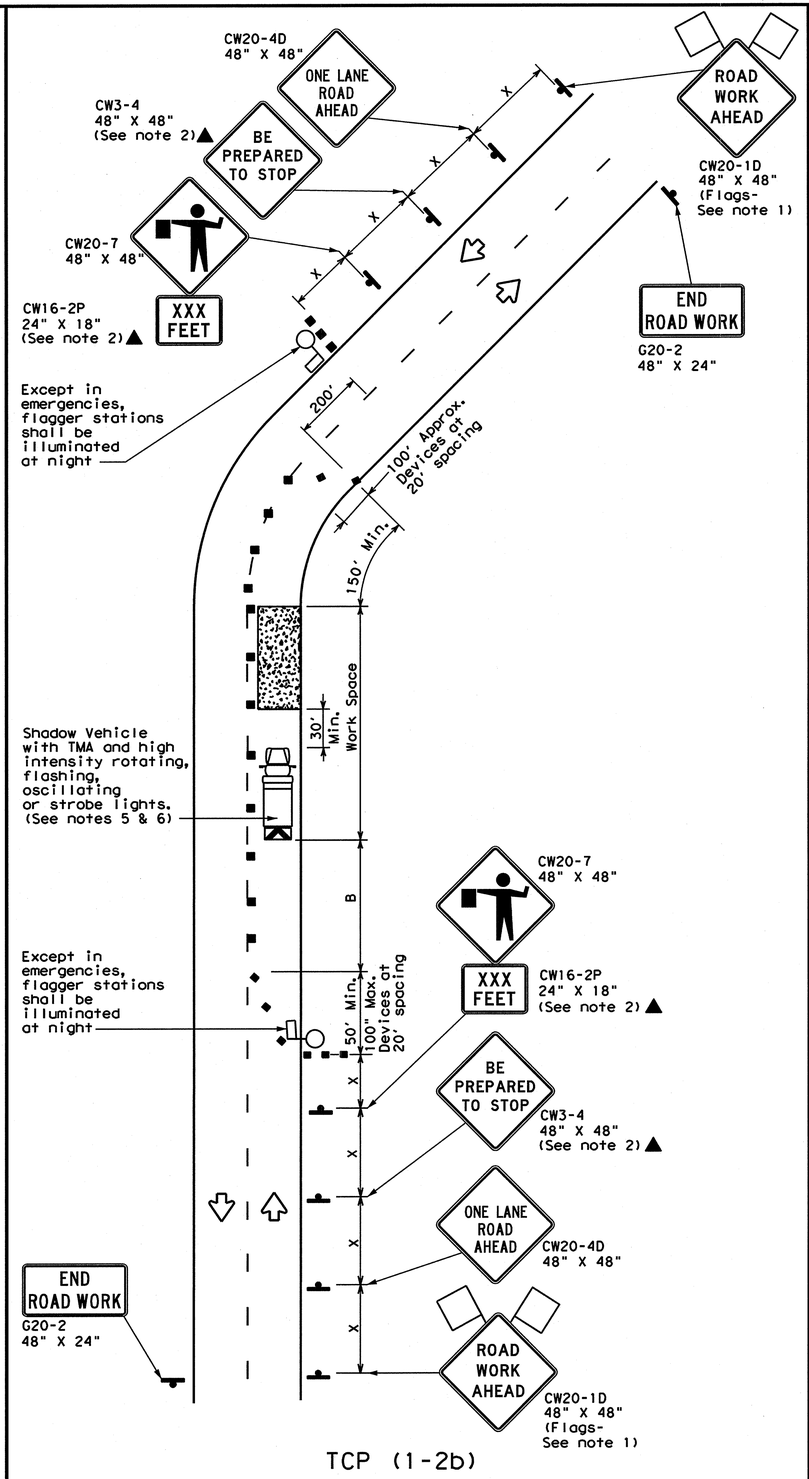

TCP (1-2b)

ONE LANE TWO-WAY CONTROL WITH FLAGGERS

LEGEND

	Type 3 Barricade		Channelizing Devices
	Heavy Work Vehicle		Truck Mounted Attenuator (TMA)
	Trailer Mounted Flashing Arrow Board	M	Portable Changeable Message Sign (PCMS)
	Sign		Traffic Flow
	Flag		Flagger

Posted Speed *	Formula	Minimum Desirable Taper Lengths ** 10' Offset	11' Offset	12' Offset	Suggested Maximum Spacing of Channelizing Devices On a Taper	On a Tangent	Minimum Sign Spacing "X" Distance	Suggested Longitudinal Buffer Space "B"	Stopping Sight Distance
30	$L = \frac{WS^2}{60}$	150'	165'	180'	30'	60'	120'	90'	200'
35		205'	225'	245'	35'	70'	160'	120'	250'
40		265'	295'	320'	40'	80'	240'	155'	305'
45	L = WS	450'	495'	540'	45'	90'	320'	195'	360'
50		500'	550'	600'	50'	100'	400'	240'	425'
55		550'	605'	660'	55'	110'	500'	295'	495'
60		600'	660'	720'	60'	120'	600'	350'	570'
65		650'	715'	780'	65'	130'	700'	410'	645'
70		700'	770'	840'	70'	140'	800'	475'	730'
75		750'	825'	900'	75'	150'	900'	540'	820'

* Conventional Roads Only

** Taper lengths have been rounded off.

L=Length of Taper(FT) W=Width of Offset(FT) S=Posted Speed(MPH)

TYPICAL USAGE

MOBILE	SHORT DURATION	SHORT TERM STATIONARY	INTERMEDIATE TERM STATIONARY	LONG TERM STATIONARY
	✓	✓		

GENERAL NOTES

1. Flags attached to signs where shown are REQUIRED.
2. All traffic control devices illustrated are REQUIRED, except those denoted with the triangle symbol may be omitted when stated elsewhere in the plans, or for routine maintenance work, when approved by the Engineer.
3. The CW3-4 "BE PREPARED TO STOP" sign may be installed after the CW20-4D "ONE LANE ROAD AHEAD" sign, but proper sign spacing shall be maintained.
4. Sign spacing may be increased or an additional CW20-1D "ROAD WORK AHEAD" sign may be used if advance warning ahead of the flagger or R1-2 "YIELD" sign is less than 1500 feet.
5. A Shadow Vehicle with a TMA should be used anytime it can be positioned 30 to 100 feet in advance of the area of crew exposure without adversely affecting the performance or quality of the work. If workers are no longer present but road or work conditions require the traffic control to remain in place, Type 3 Barricades or other channelizing devices may be substituted for the Shadow Vehicle and TMA.
6. Additional Shadow Vehicles with TMAs may be positioned off the paved surface, next to those shown in order to protect wider work spaces.

TCP (1-2a)

7. R1-2 "YIELD" sign traffic control may be used on projects with approaches that have adequate sight distance. For projects in urban areas, work spaces should be no longer than one half city block. In rural areas on roadways with less than 2000 ADT, work spaces should be no longer than 400 feet.
8. R1-2 "YIELD" sign with R1-2aP "TO ONCOMING TRAFFIC" plaque shall be placed on a support at a 7 foot minimum mounting height.

TCP (1-2b)

9. Flaggers should use two-way radios or other methods of communication to control traffic.
10. Length of work space should be based on the ability of flaggers to communicate.
11. If the work space is located near a horizontal or vertical curve, the buffer distances should be increased in order to maintain adequate stopping sight distance to the flagger and a queue of stopped vehicles (see table above).
12. Channelizing devices on the center-line may be omitted when a pilot car is leading traffic and approved by the Engineer.
13. Flaggers should use 24" STOP/SLOW paddles to control traffic. Flags should be limited to emergency situations.

For construction or maintenance contract work, specific project requirements for shadow vehicles can be found in the project GENERAL NOTES for Item 502, Barricades, Signs and Traffic Handling.

Texas Department of Transportation
Traffic Operations Division

TRAFFIC CONTROL PLAN ONE-LANE TWO-WAY TRAFFIC CONTROL

TCP(1-2)-12

©TxDOT December 1985

DN: TXDOT	CK: TXDOT	DW: TXDOT	CK: TXDOT

REVISIONS
4-90 2-12
2-94
1-97
4-98

CONT	SECT	JOB	HIGHWAY
DIST		COUNTY	SHEET NO.

DATE:
FILE:

DISCLAIMER: The use of this standard is governed by the "Texas Engineering Practice Act". No warranty of any kind is made by TxDOT for any purpose whatsoever. TxDOT assumes no responsibility for the conversion of this standard to other formats or for incorrect results or damages resulting from its use.

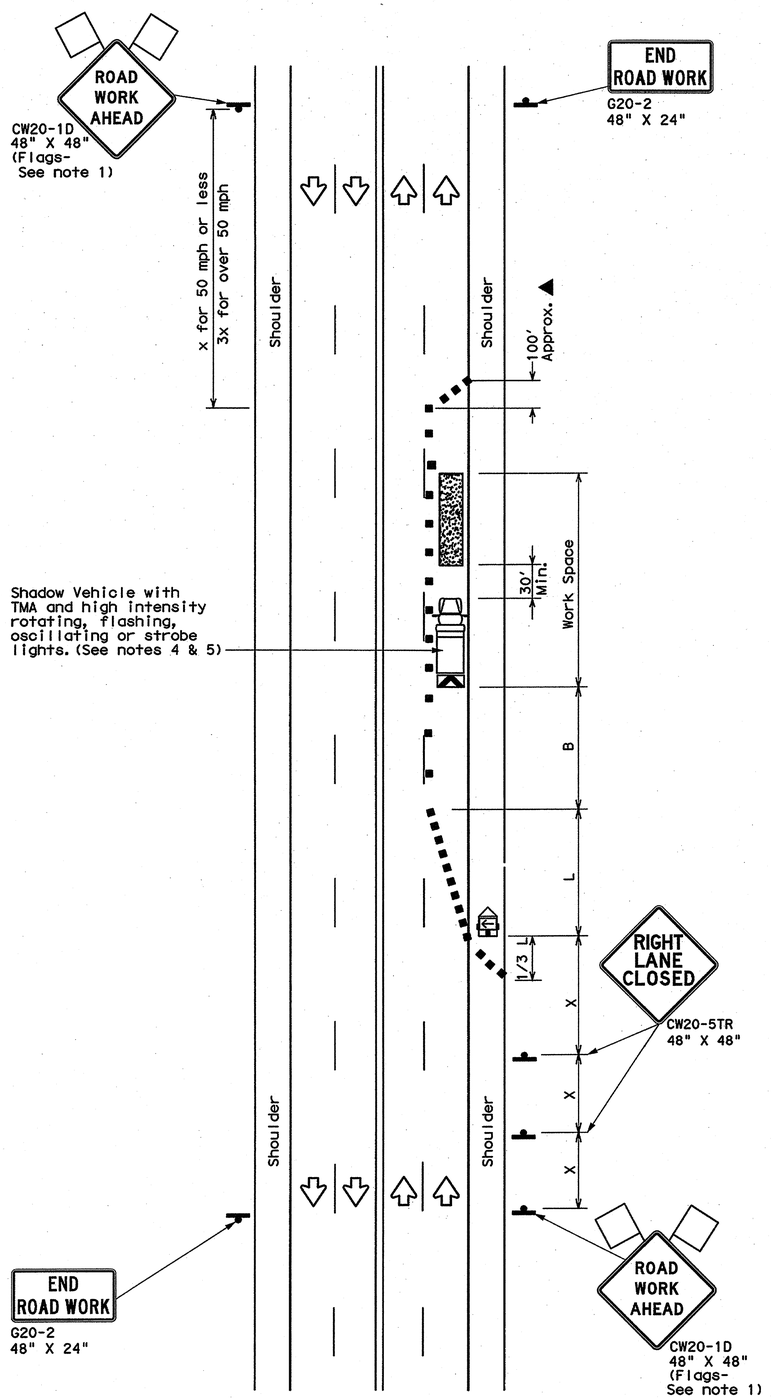

TCP (1-4a)

ONE LANE CLOSED

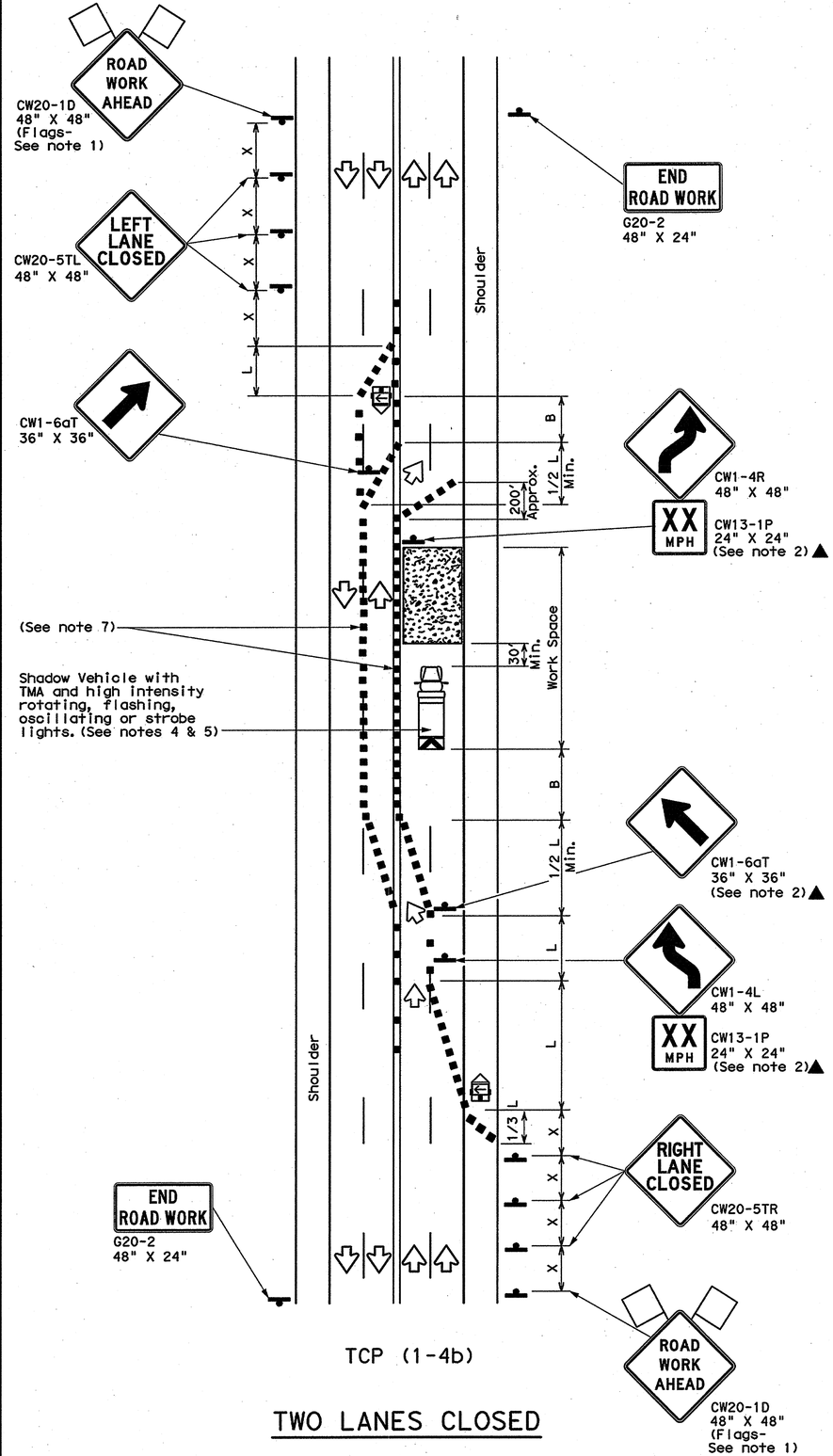

TCP (1-4b)

TWO LANES CLOSED

LEGEND			
	Type 3 Barricade		Channelizing Devices
	Heavy Work Vehicle		Truck Mounted Attenuator (TMA)
	Trailer Mounted Flashing Arrow Board		Portable Changeable Message Sign (PCMS)
	Sign		Traffic Flow
	Flag		Flagger

Posted Speed ✳	Formula	Minimum Desirable Taper Lengths ✳✳ 10' Offset	11' Offset	12' Offset	Suggested Maximum Spacing of Channelizing Devices On a Taper	On a Tangent	Minimum Sign Spacing "X" Distance	Suggested Longitudinal Buffer Space "B"
30	$L=\frac{WS^2}{60}$	150'	165'	180'	30'	60'	120'	90'
35		205'	225'	245'	35'	70'	160'	120'
40		265'	295'	320'	40'	80'	240'	155'
45	L=WS	450'	495'	540'	45'	90'	320'	195'
50		500'	550'	600'	50'	100'	400'	240'
55		550'	605'	660'	55'	110'	500'	295'
60		600'	660'	720'	60'	120'	600'	350'
65		650'	715'	780'	65'	130'	700'	410'
70		700'	770'	840'	70'	140'	800'	475'
75		750'	825'	900'	75'	150'	900'	540'

✳ Conventional Roads Only
✳✳ Taper lengths have been rounded off.
L=Length of Taper(FT) W=Width of Offset(FT) S=Posted Speed(MPH)

TYPICAL USAGE				
MOBILE	SHORT DURATION	SHORT TERM STATIONARY	INTERMEDIATE TERM STATIONARY	LONG TERM STATIONARY
	✓	✓		

GENERAL NOTES

1. Flags attached to signs where shown are REQUIRED.
2. All traffic control devices illustrated are REQUIRED, except those denoted with the triangle symbol may be omitted when stated elsewhere in the plans, or for routine maintenance work, when approved by the Engineer.
3. The CW20-1D "ROAD WORK AHEAD" sign may be repeated if the visibility of the work zone is less than 1500 feet.
4. A Shadow Vehicle with a TMA should be used anytime it can be positioned 30 to 100 feet in advance of the area of crew exposure without adversely affecting the performance or quality of the work. If workers are no longer present but road or work conditions require the traffic control to remain in place, Type 3 Barricades or other channelizing devices may be substituted for the Shadow Vehicle and TMA.
5. Additional Shadow Vehicles with TMAs may be positioned off the paved surface, next to those shown in order to protect wider work spaces.

TCP (1-4a)

6. If this TCP is used for a left lane closure , CW20-5TL "LEFT LANE CLOSED" signs shall be used and channelizing devices shall be placed on the centerline where needed to protect the work space from opposing traffic with the arrow panel placed in the closed lane near the end of the merging taper.

TCP (1-4b)

7. Where traffic is directed over a yellow centerline, channelizing devices which separate two-way traffic should be spaced on tapers at 20' or 15' if posted speeds are 35 mph or slower, and for tangent sections, at 1/2S where S is the speed in mph. This tighter device spacing is intended for the areas of conflicting markings, not the entire work zone.

For construction or maintenance contract work, specific project requirements for shadow vehicles can be found in the project GENERAL NOTES for Item 502, Barricades, Signs and Traffic Handling.

Texas Department of Transportation
Traffic Operations Division

TRAFFIC CONTROL PLAN LANE CLOSURES ON MULTILANE CONVENTIONAL ROADS

TCP(1-4)-12

© TxDOT December 1985

DN: TXDOT	CK: TXDOT	DW: TXDOT	CK: TXDOT

REVISIONS	CONT	SECT	JOB	HIGHWAY
2-94 2-12				
8-95	DIST		COUNTY	SHEET NO.
1-97				
4-98				

DATE:
FILE:

TABLE OF VARIABLE DIMENSIONS AND QUANTITIES FOR ONE HEADWALL (4)

SLOPE	DIA OF PIPE, D	Values for one Pipe: W	X	Y	L	Reinf (Lbs)	Conc (CY) (1)	Values to be added for each addt'l Pipe: X and W	Reinf (Lbs)	Conc (CY) (1)
2:1	12"	4'- 7 1/2"	2'- 6"	2'-10"	3'- 3 1/4"	84	0.6	1'- 9"	20	0.2
	15"	5'- 5 3/4"	2'- 9 1/2"	3'- 4"	3'-10 1/4"	99	0.7	2'- 2"	24	0.3
	18"	6'- 4 1/4"	3'- 1"	3'-10"	4'- 5"	120	0.9	2'- 8"	32	0.3
	21"	7'- 2 3/4"	3'- 4 1/2"	4'- 4"	5'- 0"	137	1.1	3'- 1"	43	0.4
	24"	8'- 2 1/2"	3'- 9 1/2"	4'-10"	5'- 7"	158	1.3	3'- 7"	50	0.5
	27"	9'- 1"	4'- 1"	5'- 4"	6'- 2"	173	1.5	3'-11"	56	0.6
	30"	9'-11 1/2"	4'- 4 1/2"	5'-10"	6'- 8 3/4"	197	1.7	4'- 4"	65	0.8
	33"	10'-10"	4'- 8"	6'- 4"	7'- 3 3/4"	216	2.0	4'- 8"	71	0.9
	36"	11'- 8 1/4"	4'-11 1/2"	6'-10"	7'-10 3/4"	241	2.2	5'- 1"	81	1.0
	42"	13'- 5 1/4"	5'- 6 1/2"	7'-10"	9'- 0 1/2"	290	2.8	5'-10"	97	1.3
	48"	15'- 9"	6'- 1 1/2"	9'- 4"	10'- 9 1/4"	350	3.8	6'- 7"	117	1.7
	54"	17'- 5 3/4"	6'- 8 1/2"	10'- 4"	11'-11 1/4"	415	4.5	7'- 6"	151	2.1
	60"	19'- 2 3/4"	7'- 3 1/2"	11'- 4"	13'- 1"	469	5.3	8'- 3"	174	2.5
	66"	20'-11 1/2"	7'-10 1/2"	12'- 4"	14'- 3"	530	6.2	8'- 9"	194	2.9
	72"	22'- 8 1/2"	8'- 5 1/2"	13'- 4"	15'- 4 3/4"	587	7.1	9'- 4"	213	3.3
3:1	12"	6'- 3"	2'- 6"	4'- 3"	4'-11"	114	0.8	1'- 9"	22	0.2
	15"	7'- 5"	2'- 9 1/2"	5'- 0"	5'- 9 1/4"	133	1.1	2'- 2"	28	0.3
	18"	8'- 6 3/4"	3'- 1"	5'- 9"	6'- 7 3/4"	166	1.3	2'- 8"	37	0.5
	21"	9'- 8 3/4"	3'- 4 1/2"	6'- 6"	7'- 6"	189	1.6	3'- 1"	48	0.6
	24"	11'- 0"	3'- 9 1/2"	7'- 3"	8'- 4 1/2"	221	2.0	3'- 7"	58	0.7
	27"	12'- 2"	4'- 1"	8'- 0"	9'- 2 3/4"	245	2.3	3'-11"	67	0.8
	30"	13'- 4"	4'- 4 1/2"	8'- 9"	10'- 1 1/4"	287	2.7	4'- 4"	77	1.0
	33"	14'- 5 3/4"	4'- 8"	9'- 6"	10'-11 3/4"	310	3.1	4'- 8"	84	1.2
	36"	15'- 7 3/4"	4'-11 1/2"	10'- 3"	11'-10"	343	3.5	5'- 1"	96	1.4
	42"	17'-11 1/2"	5'- 6 1/2"	11'- 9"	13'- 6 3/4"	424	4.5	5'-10"	119	1.7
	48"	21'- 1 3/4"	6'- 1 1/2"	14'- 0"	16'- 2"	527	6.1	6'- 7"	146	2.3
	54"	23'- 5 1/2"	6'- 8 1/2"	15'- 6"	17'-10 3/4"	618	7.3	7'- 6"	186	2.9
	60"	25'- 9 1/4"	7'- 3 1/2"	17'- 0"	19'- 7 1/2"	707	8.7	8'- 3"	219	3.4
	66"	28'- 1"	7'-10 1/2"	18'- 6"	21'- 4 1/4"	797	10.1	8'- 9"	242	3.9
	72"	30'- 4 3/4"	8'- 5 1/2"	20'- 0"	23'- 1 1/4"	910	11.7	9'- 4"	272	4.4
4:1	12"	7'-10 3/4"	2'- 6"	5'- 8"	6'- 6 1/2"	144	1.1	1'- 9"	24	0.3
	15"	9'- 4"	2'- 9 1/2"	6'- 8"	7'- 8 1/2"	177	1.5	2'- 2"	32	0.4
	18"	10'- 9 1/2"	3'- 1"	7'- 8"	8'-10 1/4"	217	1.9	2'- 8"	42	0.5
	21"	12'- 2 3/4"	3'- 4 1/2"	8'- 8"	10'- 0"	254	2.3	3'- 1"	57	0.7
	24"	13'- 9 1/2"	3'- 9 1/2"	9'- 8"	11'- 2"	295	2.8	3'- 7"	67	0.9
	27"	15'- 3"	4'- 1"	10'- 8"	12'- 3 3/4"	328	3.3	3'-11"	77	1.0
	30"	16'- 8 1/4"	4'- 4 1/2"	11'- 8"	13'- 5 3/4"	379	3.8	4'- 4"	89	1.3
	33"	18'- 1 3/4"	4'- 8"	12'- 8"	14'- 7 1/2"	417	4.5	4'- 8"	101	1.4
	36"	19'- 7"	4'-11 1/2"	13'- 8"	15'- 9 1/4"	464	5.1	5'-1"	115	1.7
	42"	22'- 5 3/4"	5'- 6 1/2"	15'- 8"	18'- 1"	575	6.5	5'-10"	141	2.1
	48"	26'- 6 1/4"	6'- 1 1/2"	18'- 8"	21'- 6 3/4"	720	8.9	6'- 7"	175	2.8
	54"	29'- 5"	6'- 8 1/2"	20'- 8"	23'-10 1/4"	863	10.7	7'- 6"	226	3.6
	60"	32'- 3 3/4"	7'- 3 1/2"	22'- 8"	26'- 2"	984	12.7	8'- 3"	264	4.3
	66"	35'- 2 1/2"	7'-10 1/2"	24'- 8"	28'- 5 3/4"	1126	14.9	8'- 9"	300	4.9
	72"	38'- 1 1/4"	8'- 5 1/2"	26'- 8"	30'- 9 1/2"	1283	17.3	9'- 4"	334	5.6
6:1	12"	11'- 2"	2'- 6"	8'- 6"	9'- 9 3/4"	220	1.9	1'- 9"	28	0.4
	15"	13'- 2 1/4"	2'- 9 1/2"	10'- 0"	11'- 6 1/2"	264	2.5	2'- 2"	37	0.5
	18"	15'- 2 1/2"	3'- 1"	11'- 6"	13'- 3 1/4"	326	3.2	2'- 8"	50	0.7
	21"	17'- 2 3/4"	3'- 4 1/2"	13'- 0"	15'- 0 1/4"	381	3.9	3'- 1"	69	0.9
	24"	19'- 4 1/2"	3'- 9 1/2"	14'- 6"	16'- 9"	447	4.8	3'- 7"	80	1.2
	27"	21'- 4 3/4"	4'- 1"	16'- 0"	18'- 5 3/4"	506	5.7	3'-11"	96	1.4
	30"	23'- 5 1/4"	4'- 4 1/2"	17'- 6"	20'- 2 1/2"	587	6.7	4'- 4"	110	1.7
	33"	25'- 5 1/2"	4'- 8"	19'- 0"	21'-11 1/4"	667	7.8	4'- 8"	127	2.0
	36"	27'- 5 3/4"	4'-11 1/2"	20'- 6"	23'- 8"	727	9.0	5'- 1"	144	2.3
	42"	31'- 6 1/4"	5'- 6 1/2"	23'- 6"	27'- 1 1/2"	914	11.5	5'-10"	179	3.0
	48"	37'- 3 1/2"	6'- 1 1/2"	28'- 0"	32'- 4"	1181	15.9	6'- 7"	231	4.0
	54"	41'- 4 1/4"	6'- 8 1/2"	31'- 0"	35'- 9 1/2"	1412	19.2	7'- 6"	300	5.0
	60"	45'- 4 3/4"	7'- 3 1/2"	34'- 0"	39'- 3"	1619	22.9	8'- 3"	353	6.0

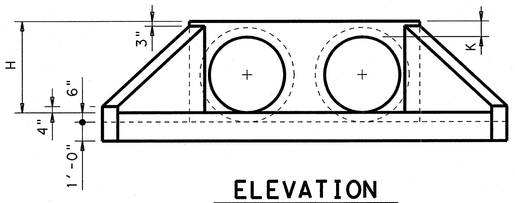

ELEVATION

Showing dimensions

1. Quantities shown are for concrete pipe and will increase slightly for metal pipe installations.
2. For vehicle safety, curbs shall project no more than 3" above finished grade. Curb heights shall be reduced, if necessary, to meet these requirements. No changes will be made in quantities and no additional compensation will be allowed for this work.
3. Provide a 1'-0" footing as shown where required to maintain 4" Min cover for pipes.
4. Quantities shown are for one structure end only (one headwall).
5. Min Length = 6" + 3" × $\left(\frac{12 \times H - 7}{12 \times L}\right)$

   Max Length = 12 × H − 3" × $\left(\frac{12 \times H - 7}{12 \times L}\right)$ − 1"
6. Lengths of wings based on SL:1 Slope along this line.

TABLE OF REINFORCING STEEL (4)

Bar	Size	Spa	No.
A	# 4	1'-0"	~
B	# 3	1'-6"	~
C	# 4	1'-0"	~
D	# 3	1'-0"	~
E	# 5	~	4
F	# 5	~	~
G	# 3	~	2
S	# 4	~	6
V	# 4	1'-0"	~
W	# 5	~	4

TABLE OF CONSTANT DIMENSIONS

DIA OF PIPE, D	G	K	H
12"	9"	1'- 0"	2'- 0"
15"	11"	1'- 0"	2'- 3"
18"	1'- 2"	1'- 0"	2'- 6"
21"	1'- 4"	1'- 0"	2'- 9"
24"	1'- 7"	1'- 0"	3'- 0"
27"	1'- 8"	1'- 0"	3'- 3"
30"	1'-10"	1'- 0"	3'- 6"
33"	1'-11"	1'- 0"	3'- 9"
36"	2'- 1"	1'- 0"	4'- 0"
42"	2'- 4"	1'- 0"	4'- 6"
48"	2'- 7"	1'- 3"	5'- 3"
54"	3'- 0"	1'- 3"	5'- 9"
60"	3'- 3"	1'- 3"	6'- 3"
66"	3'- 3"	1'- 3"	6'- 9"
72"	3'- 4"	1'- 3"	7'- 3"

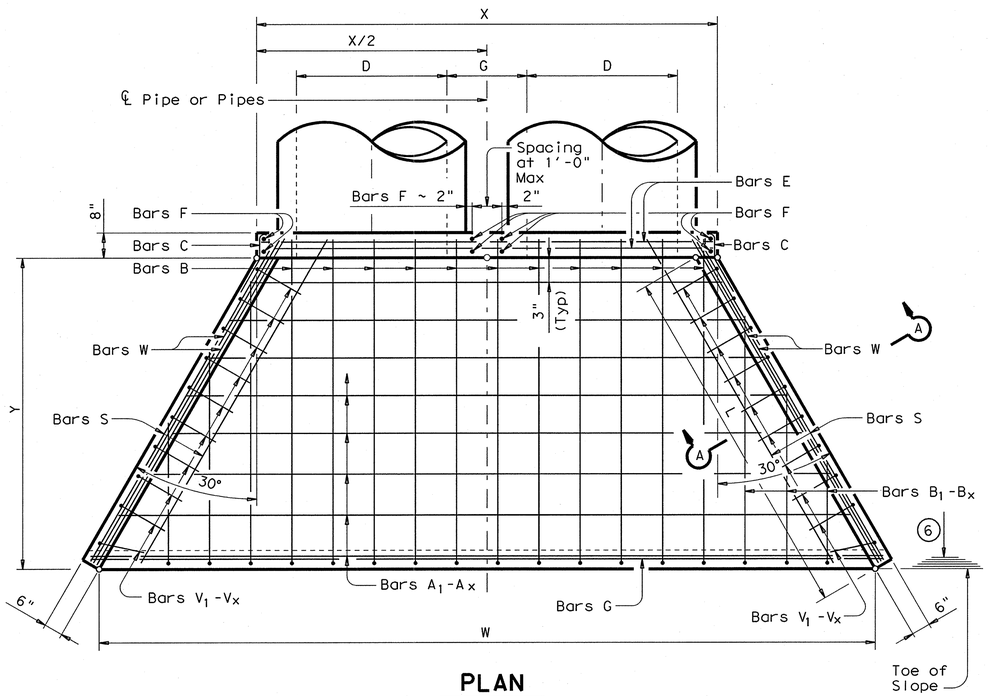

PLAN

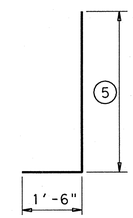

BARS V

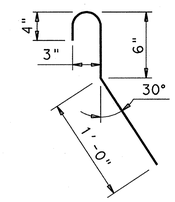

BARS C
(2'-0" long)

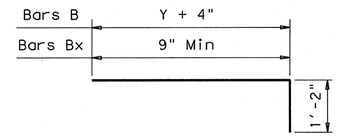

BARS B & B1-Bx

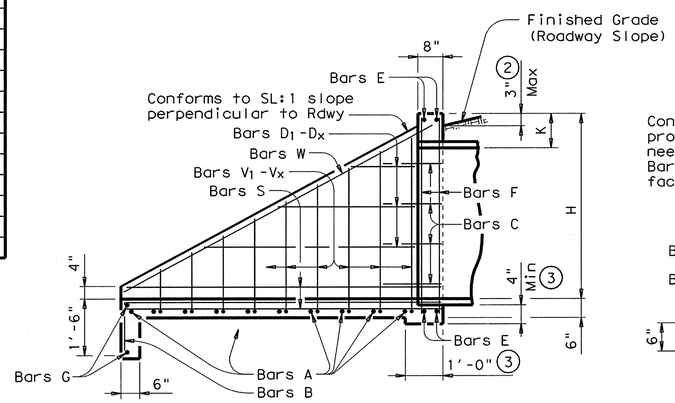

TYPICAL WING ELEVATION

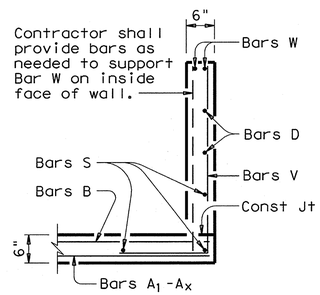

SECTION A-A

GENERAL NOTES:

Designed according to AASHTO LRFD Specifications.

Reinforcing steel shall be placed with the center of the outside layer of bars 2" from the surface of the concrete.

All reinforcing steel shall be Grade 60.

All concrete shall be Class "C" and shall have a minimum compressive strength of 3600 psi.

No bridge rails of any type may be mounted directly to these culvert headwalls.

DISCLAIMER:
The use of this standard is governed by the "Texas Engineering Practice Act". No warranty of any kind is made by TxDOT for any purpose whatsoever. TxDOT assumes no responsibility for the conversion of this standard to other formats or for incorrect results or damages resulting from its use.

ACC:

LEVELS DISPLAYED

1

Texas Department of Transportation
Bridge Division

CONCRETE HEADWALLS WITH FLARED WINGS FOR 0° SKEW PIPE CULVERTS

CH-FW-0

FILE: chfw00se.dgn	DN: TxDOT	CK: TxDOT	DW: TxDOT	CK: GAF
© TxDOT February 2010	DISTRICT	FEDERAL AID PROJECT		SHEET
REVISIONS				
	COUNTY	CONTROL	SECT	JOB	HIGHWAY

TABLE OF DIMENSIONS & REINFORCING STEEL
(Wings for One Structure End)

Dimensions					Variable Reinforcing				Estimated ④ Quantities per ft of wing (2~Wings)		Estimated Quantities per ft of Toewall (1~Toewall)	
					Bars J1		Bars J2					
Maximum Wingwall Height Hw	W	X	Y	Z	Size	Spa	Size	Spa	Reinf (Lb/Ft)	Conc (CY/Ft)	Reinf (Lb/Ft)	Conc (CY/Ft)
2'-6"	2'-10"	10"	1'- 0"	7"	#4	1'-0"	#4	1'-0"	48.64	0.406	6.85	0.071
2'-9"	2'-10"	10"	1'- 0"	7"	#4	1'-0"	#4	1'-0"	49.31	0.424	6.85	0.071
3'-0"	2'-10"	10"	1'- 0"	7"	#4	1'-0"	#4	1'-0"	49.98	0.444	6.85	0.071
3'-3"	2'-10"	10"	1'- 0"	7"	#4	1'-0"	#4	1'-0"	53.32	0.462	6.85	0.071
3'-6"	2'-10"	10"	1'- 0"	7"	#4	1'-0"	#4	1'-0"	53.98	0.480	6.85	0.071
4'-0"	3'- 2"	1'- 2"	1'- 0"	7"	#4	1'-0"	#4	1'-0"	55.77	0.532	6.85	0.071
4'-6"	3'- 2"	1'- 2"	1'- 0"	7"	#4	1'-0"	#4	1'-0"	59.77	0.568	6.85	0.071
5'-0"	3'- 9"	1'- 7"	1'- 2"	7"	#4	1'-0"	#4	1'-0"	63.45	0.632	6.96	0.075
5'-6"	3'- 9"	1'- 7"	1'- 2"	7"	#4	1'-0"	#4	1'-0"	67.46	0.668	6.96	0.075
6'-0"	4'- 4"	2'- 0"	1'- 4"	7"	#5	1'-0"	#5	1'-0"	80.67	0.730	7.07	0.078
6'-6"	4'- 4"	2'- 0"	1'- 4"	7"	#5	1'-0"	#5	1'-0"	85.05	0.768	7.07	0.078
7'-0"	5'- 0"	2'- 3"	1'- 9"	8"	#5	1'-0"	#5	1'-0"	92.15	0.864	8.07	0.093
7'-6"	5'- 0"	2'- 3"	1'- 9"	8"	#5	1'-0"	#5	1'-0"	96.54	0.902	8.07	0.093
8'-0"	5'- 6"	2'- 8"	1'-10"	8"	#5	6"	#5	6"	139.04	0.962	8.13	0.095
8'-6"	5'- 6"	2'- 8"	1'-10"	8"	#5	6"	#5	6"	144.47	1.000	8.13	0.095
9'-6"	6'- 0"	2'-10"	2'- 2"	9"	#5	6"	#5	6"	156.93	1.136	8.41	0.110
10'-6"	6'- 5"	3'- 0"	2'- 5"	9"	#6	6"	#5	6"	196.27	1.234	8.57	0.117
11'-6"	7'- 2"	3'- 6"	2'- 8"	11"	#6	6"	#6	6"	230.13	1.438	9.52	0.140
12'-6"	7'- 8"	3'- 9"	2'-11"	1'- 0"	#7	6"	#6	6"	283.41	1.592	9.74	0.157
13'-6"	8'- 2"	4'- 0"	3'- 2"	1'- 2"	#8	6"	#6	6"	348.72	1.804	10.02	0.186
14'-6"	8'-10"	4'- 5"	3'- 5"	1'- 4"	#9	6"	#6	6"	432.94	2.046	10.30	0.218
15'-6"	9'- 6"	4'-10"	3'- 8"	1'- 6"	#9	6"	#7	6"	489.52	2.302	11.24	0.253
16'-0"	9'-11"	5'- 0"	3'-11"	1'- 7"	#9	6"	#7	6"	505.72	2.448	11.47	0.279

TABLE OF WINGWALL REINFORCING (2~Wings)

Bar	Size	No.	Spa
D1	#6	~	1'-0"
D2	#6	~	1'-0"
E1	#4	~	1'-0"
F	#4	~	1'-0"
G	#6	~	8"
M1	#4	4	~
P	#4	~	1'-0"
V	#4	~	1'-0"

TABLE OF TOEWALL REINFORCING

Bar	Size	No	Spa
J3	#4	~	1'-0"
M2	#4	2	~
E2	#4	~	1'-0"

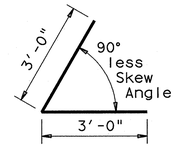

BARS D1

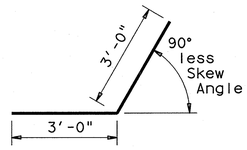

BARS D2

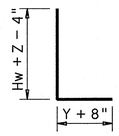

BARS J1

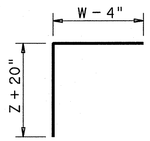

BARS J2

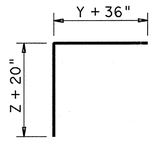

BARS J3

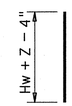

BARS V

WING DIMENSION CALCULATIONS:

Formulas: (All values are in Feet)

Hw = H + T + C
Lw = (Hw) (SL) ÷ Cosine θ for Ty PW-1
= (Hw - 1') (SL) ÷ Cosine θ for Ty PW-2 and Hw ≥ 4'
= (Hw - 0.5') (SL) ÷ Cosine θ for Ty PW-2 and Hw < 4'

For Cast-in-place culverts:
Ltw = [(N) (S) + (N + 1) (U)] ÷ Cosine θ

For Precast culverts:
Ltw = [(N) (2 U + S) + (N - 1) (0.5')] ÷ Cosine θ
Total Wingwall Area (Two Wings ~ SF)
= (2)(Hw)(Lw) for Ty PW-1
= (2)(Hw)(Lw) - 6 SF for Ty PW-2 and Hw ≥ 4'
= (2)(Hw)(Lw) - 1.5 SF for Ty PW-2 and Hw < 4'

Hw = Height of Wingwall
Lw = Length of Wingwall
Ltw = Culvert Toewall Length
N = Number of Culvert Spans
SL:1 = Channel Slope ratio. (Horizontal: 1 Vertical, Usual value is 2:1)
θ = Culvert Skew

See applicable box culvert standard for S, H, T and U values.

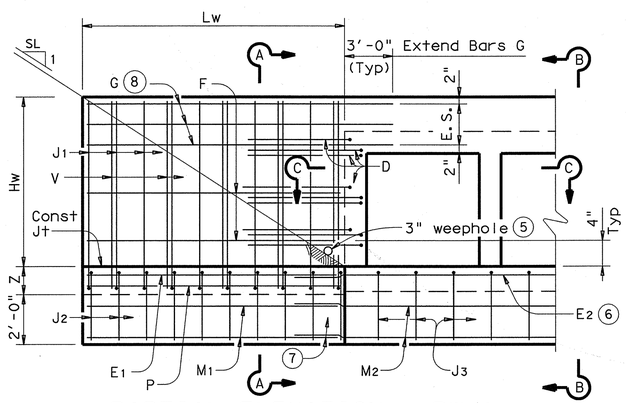

PARTIAL ELEVATION - PW-1

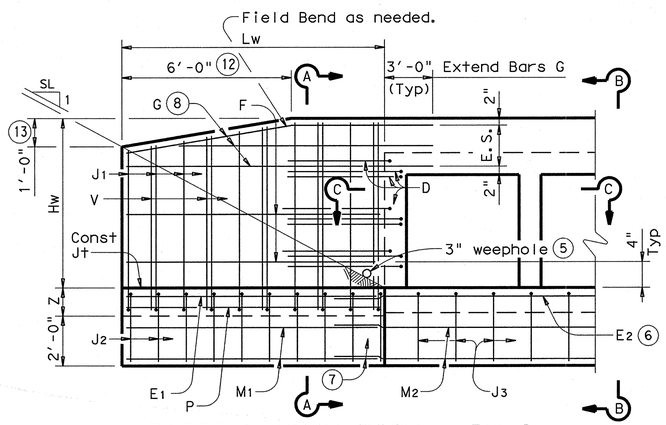

PARTIAL ELEVATION - PW-2

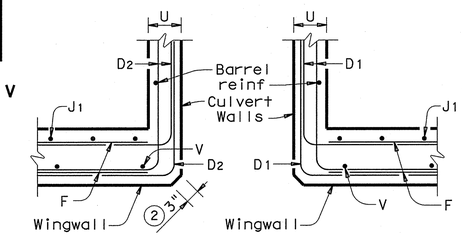

SECTION C-C

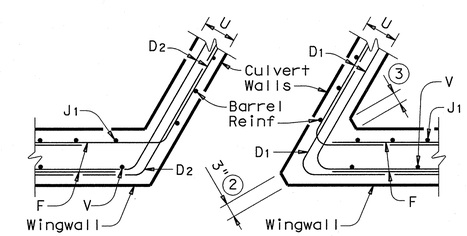

SECTION C-C

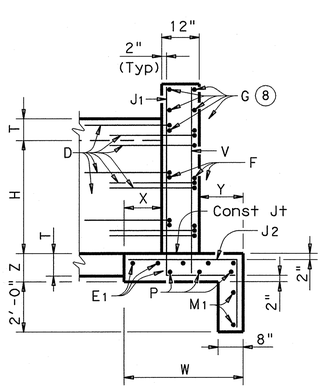

SECTION A-A
(Showing Wing Reinf)

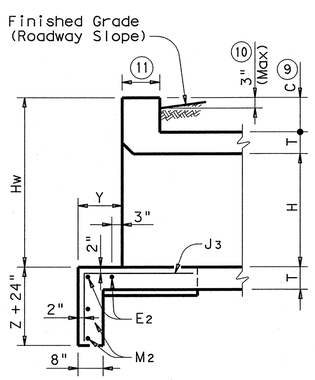

SECTION B-B
(Showing Wing Reinf)

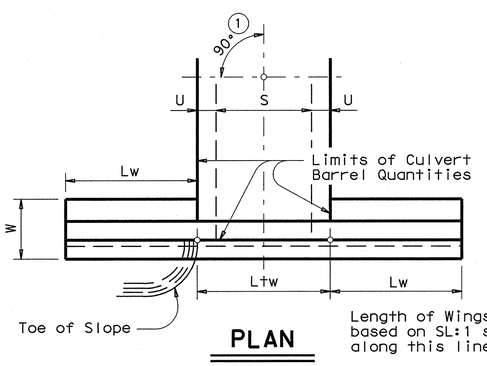

PLAN

DETAILS FOR NON-SKEWED BOX CULVERTS

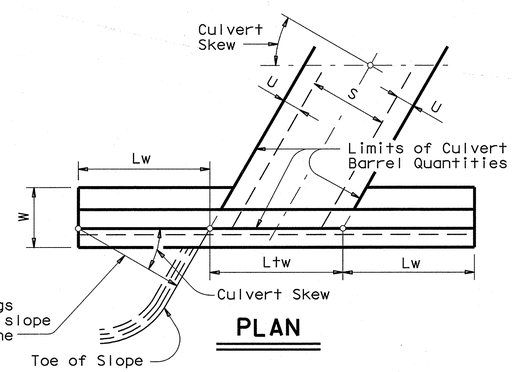

PLAN

DETAILS FOR SKEWED BOX CULVERTS
(Showing 30° Skew)

① Skew Angle = 0°

② At discharge end, chamfer may be ¾".

③ For 15° Skew ~ 1"
For 30° Skew ~ 2"
For 45° Skew ~ 3"

④ Quantities shown are for two Type PW-1 wings. Adjust concrete volume for Type PW-2 wings. To determine estimated quantities for two wings, multiply the tabulated values by Lw. Quantities shown do not include weight of Bars D.

⑤ Provide weepholes for Hw = 5'-0" and greater. Fill around weepholes with coarse gravel.

⑥ Extend Bars E2 1'-6" minimum into the wingwall footing.

⑦ Lap Bars M1 1'-6" minimum with Bars M2.

⑧ Bars G equally spaced at 8" maximum, place as shown. Provide at least two pair Bars G per wing.

⑨ 0" min to 5'-0" max. Estimated curb heights are shown elsewhere in the plans. For structures with pedestrian rail, bicycle rail or curbs taller than 1'-0", refer to ECD standard. For structures with T6 bridge rail, refer to T6-CM standard. For structures with traffic rail, other than T6, refer to RAC standard.

⑩ For vehicle safety, the following requirements must be met:
- For structures without bridge rail, curbs cannot project more than 3" above finished grade.
- For structures with bridge rail, build curbs flush with finished grade.

Reduce curb heights, if necessary, to meet the above requirements. No changes will be made in quantities and no additional compensation will be allowed for this work.

⑪ 1'-0" typical. 2'-0" typical when RAC standard is referenced elsewhere in the plans.

⑫ 3'-0" for Hw < 4'.

⑬ 6" for Hw < 4'.

GENERAL NOTES:

Designed in accordance with AASHTO LRFD Bridge Design Specifications.

Provide Class "C" Concrete (f'c = 3,600 psi Min) and Grade 60 reinforcing steel.

Provide 1 ¼" Min clear cover to reinforcing steel.

Depth of toewalls for wingwalls and culverts may be reduced or eliminated when founded on solid rock, when directed by the Engineer.

See BCS sheet for wingwall type and additional dimensions and information.

The quantities for concrete and reinforcing steel resulting from the formulas given on this sheet are for the Contractor's information only.

DESIGNER NOTES:

Type PW-1 can be used for all applications and must be used if railing is to be mounted to the wingwall.

Type PW-2 can only be used for applications without a railing mounted to the wingwall.

DISCLAIMER:
The use of this standard is governed by the "Texas Engineering Practice Act". No warranty of any kind is made by TxDOT for any purpose whatsoever. TxDOT assumes no responsibility for the conversion of this standard to other formats or for incorrect results or damages resulting from its use.

ACC:

LEVELS DISPLAYED

Texas Department of Transportation
Bridge Division

CONCRETE WINGWALLS WITH PARALLEL WINGS FOR BOX CULVERTS TYPES PW-1 AND PW-2

PW

FILE: pwstde01.dgn	DN: GAF	CK: CAT	DW: TxDOT	CK: GAF
© TxDOT February 2010	DISTRICT	FEDERAL AID PROJECT		SHEET
REVISIONS 11-10: Reinforcing Quantities. 01-12: PW-1 & PW-2.	COUNTY		CONTROL SECT JOB	HIGHWAY

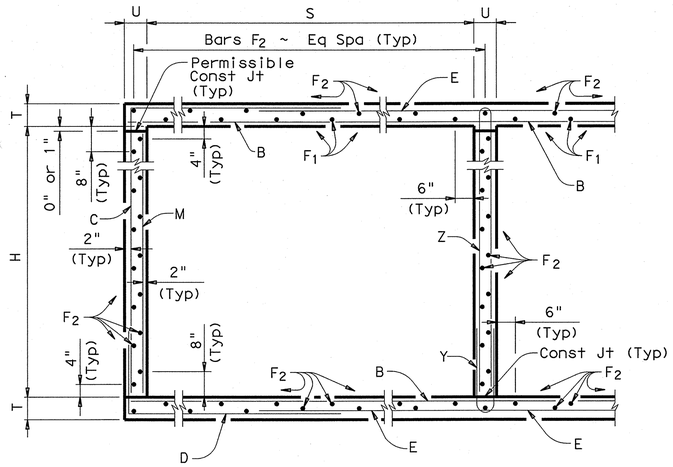

TYPICAL SECTION

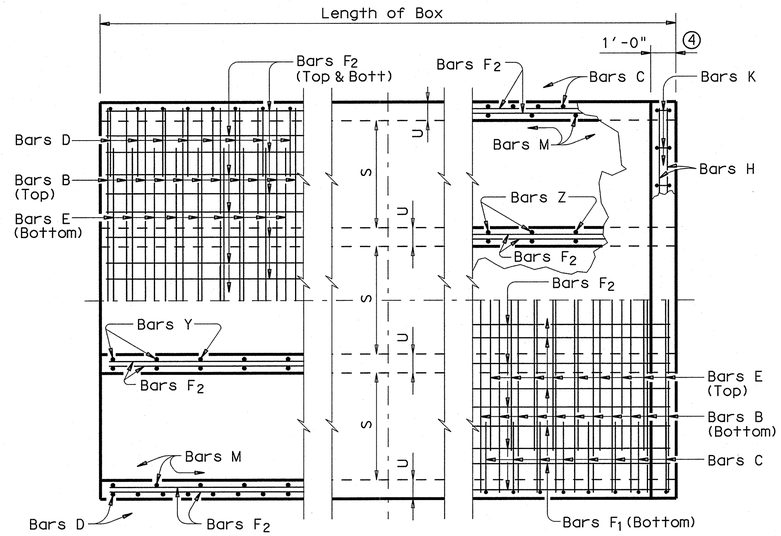

PART PLANS

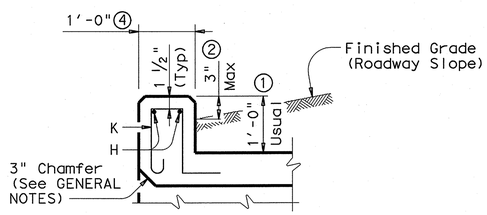

SECTION THRU CURB

H	Bar Dimensions	
	"X"	"Y"
3'-0"	3'-5"	2'-2"
4'-0"	4'-5"	2'-2"
5'-0"	5'-5"	2'-2"
6'-0"	6'-5"	2'-2"
7'-0"	7'-5"	2'-2"

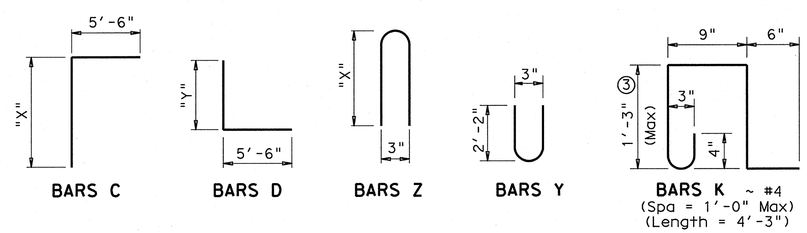

① 0" min to 5'-0" max. Estimated curb heights are shown elsewhere in the plans. For structures with pedestrian rail, bicycle rail or curbs taller than 1'-0", refer to ECD standard. For structures with T6 bridge rail, refer to T6-CM standard. For structures with traffic rail, other than T6, refer to RAC standard.

② For vehicle safety, the following requirements must be met:
- For structures without bridge rail, curbs shall project no more than 3" above finished grade.
- For structures with bridge rail, curbs shall be flush with finished grade.
Curb heights shall be reduced, if necessary, to meet the above requirements. No changes will be made in quantities and no additional compensation will be allowed for this work.

③ For curbs less than 1'-0" high, tilt bars K or reduce bar height as necessary to maintain cover. For curbs less than 3" high, bars K may be omitted.

④ 1'-0" typical. 2'-0" when RAC standard is referred to elsewhere in the plans.

Deformed welded wire reinforcement (WWR) meeting the requirements of ASTM A1064 may be used to replace conventional reinforcement shown at the Contractor's option. The area of required reinforcement may be reduced by the ratio of 60 ksi / 70 ksi. Spacing of WWR is limited to 4" Min and 18" Max. When required, provide lap splices in the WWR of the same length required for the equivalent bar size, rounded up for wire sizes between conventional bar sizes.

Example Conversion: Replacement of No. 6 Gr 60 at 6" Spacing with WWR.
WWR required = (0.44 sq in/ 0.5') x (60 ksi/70 ksi) = 0.754 sq in/ft.
If D30.6 wire is used to meet the 0.754 sq in/ft requirement in this example, the required spacing = (0.306 sq in/ 0.754 sq in/ft) x 12 in/ft = 4.87" Max spacing.
Required lap length for the provided D30.6 wire is 2'-2" (Lap required for uncoated No. 5 bars, as shown in Item 440).

GENERAL NOTES:

Designed according to AASHTO LRFD Specifications.
Designed to the maximum fill height shown.
All reinforcing steel shall be Grade 60.
All concrete shall be Class "C" with these exceptions: use Class "S" for top slabs of culverts with overlay, with 1-to-2 course surface treatment, or with the top slab as the final riding surface.
Class "C" concrete shall have a minimum compressive strength of 3,600 psi. Class "S" concrete shall have a minimum compressive strength of 4,000 psi.
The use of permanent forms is not allowed.
The bottom edge of the top slab shall be chamfered 3" at the entrance.
Reinforcing bars shall be adjusted to provide a minimum of 1 1/4" clear cover.
Construction joints shown at the flow line may be raised a maximum of 6" at the Contractor's option. If this option is used, Bars M may be cut off or raised, Bars C and D may be reversed, and Bars Y and Z may be reversed.
See standard MC-MD for skewed ends, angle sections and lengthening details.

HL93 LOADING — SHEET 1 OF 2

Texas Department of Transportation
Bridge Division

MULTIPLE BOX CULVERTS CAST-IN-PLACE
7'-0" SPAN
0' TO 10' FILL

MC-7-10

FILE: mc710ste.dgn	DN: GAF	CK: LMW	DW: BWH/TxDOT	CK: GAF
© TxDOT February 2010	DISTRICT	FEDERAL AID PROJECT		SHEET
REVISIONS 10-12: Added WWR	COUNTY	CONTROL	SECT	JOB	HIGHWAY

DISCLAIMER:
The use of this standard is governed by the "Texas Engineering Practice Act". No warranty of any kind is made by TxDOT for any purpose whatsoever. TxDOT assumes no responsibility for the conversion of this standard to other formats or for incorrect results or damages resulting from its use.

LEVELS DISPLAYED | ACC:

P-201312-01

BILLS OF REINFORCING STEEL (For Box Length = 40 feet)

NUMBER OF SPANS	SECTION DIMENSIONS S	H	T	U	Bars B No.	Size	Spa	Length	Wt	Bars C & D No.	Size	Spa	Bar C Length	Bar C Wt	Bar D Length	Bar D Wt	Bars E No.	Size	Spa	Length	Wt
2	7'-0"	3'-0"	7"	7"	194	#5	5"	15'- 6"	3,136	162	#4	6"	8'-11"	965	7'- 8"	830	194	#5	5"	8'- 0"	1,619
3	7'-0"	3'-0"	7"	7"	194	#5	5"	23'- 1"	4,671	162	#4	6"	8'-11"	965	7'- 8"	830	194	#5	5"	15'- 7"	3,153
4	7'-0"	3'-0"	7"	7"	194	#5	5"	30'- 8"	6,205	162	#4	6"	8'-11"	965	7'- 8"	830	194	#5	5"	23'- 2"	4,688
5	7'-0"	3'-0"	7"	7"	194	#5	5"	38'- 3"	7,740	162	#4	6"	8'-11"	965	7'- 8"	830	194	#5	5"	30'- 9"	6,222
6	7'-0"	3'-0"	7"	7"	194	#5	5"	45'-10"	9,274	162	#4	6"	8'-11"	965	7'- 8"	830	194	#5	5"	38'- 4"	7,756
2	7'-0"	4'-0"	7"	7"	194	#5	5"	15'- 6"	3,136	162	#4	6"	9'-11"	1,073	7'- 8"	830	194	#5	5"	8'- 0"	1,619
3	7'-0"	4'-0"	7"	7"	194	#5	5"	23'- 1"	4,671	162	#4	6"	9'-11"	1,073	7'- 8"	830	194	#5	5"	15'- 7"	3,153
4	7'-0"	4'-0"	7"	7"	194	#5	5"	30'- 8"	6,205	162	#4	6"	9'-11"	1,073	7'- 8"	830	194	#5	5"	23'- 2"	4,688
5	7'-0"	4'-0"	7"	7"	194	#5	5"	38'- 3"	7,740	162	#4	6"	9'-11"	1,073	7'- 8"	830	194	#5	5"	30'- 9"	6,222
6	7'-0"	4'-0"	7"	7"	194	#5	5"	45'-10"	9,274	162	#4	6"	9'-11"	1,073	7'- 8"	830	194	#5	5"	38'- 4"	7,756
2	7'-0"	5'-0"	7"	7"	194	#5	5"	15'- 6"	3,136	162	#4	6"	10'-11"	1,181	7'- 8"	830	194	#5	5"	8'- 0"	1,619
3	7'-0"	5'-0"	7"	7"	194	#5	5"	23'- 1"	4,671	162	#4	6"	10'-11"	1,181	7'- 8"	830	194	#5	5"	15'- 7"	3,153
4	7'-0"	5'-0"	7"	7"	194	#5	5"	30'- 8"	6,205	162	#4	6"	10'-11"	1,181	7'- 8"	830	194	#5	5"	23'- 2"	4,688
5	7'-0"	5'-0"	7"	7"	194	#5	5"	38'- 3"	7,740	162	#4	6"	10'-11"	1,181	7'- 8"	830	194	#5	5"	30'- 9"	6,222
6	7'-0"	5'-0"	7"	7"	194	#5	5"	45'-10"	9,274	162	#4	6"	10'-11"	1,181	7'- 8"	830	194	#5	5"	38'- 4"	7,756
2	7'-0"	6'-0"	7"	7"	194	#5	5"	15'- 6"	3,136	162	#4	6"	11'-11"	1,290	7'- 8"	830	194	#5	5"	8'- 0"	1,619
3	7'-0"	6'-0"	7"	7"	194	#5	5"	23'- 1"	4,671	162	#4	6"	11'-11"	1,290	7'- 8"	830	194	#5	5"	15'- 7"	3,153
4	7'-0"	6'-0"	7"	7"	194	#5	5"	30'- 8"	6,205	162	#4	6"	11'-11"	1,290	7'- 8"	830	194	#5	5"	23'- 2"	4,688
5	7'-0"	6'-0"	7"	7"	194	#5	5"	38'- 3"	7,740	162	#4	6"	11'-11"	1,290	7'- 8"	830	194	#5	5"	30'- 9"	6,222
6	7'-0"	6'-0"	7"	7"	194	#5	5"	45'-10"	9,274	162	#4	6"	11'-11"	1,290	7'- 8"	830	194	#5	5"	38'- 4"	7,756
2	7'-0"	7'-0"	7"	7"	194	#5	5"	15'- 6"	3,136	162	#4	6"	12'-11"	1,398	7'- 8"	830	194	#5	5"	8'- 0"	1,619
3	7'-0"	7'-0"	7"	7"	194	#5	5"	23'- 1"	4,671	162	#4	6"	12'-11"	1,398	7'- 8"	830	194	#5	5"	15'- 7"	3,153
4	7'-0"	7'-0"	7"	7"	194	#5	5"	30'- 8"	6,205	162	#4	6"	12'-11"	1,398	7'- 8"	830	194	#5	5"	23'- 2"	4,688
5	7'-0"	7'-0"	7"	7"	194	#5	5"	38'- 3"	7,740	162	#4	6"	12'-11"	1,398	7'- 8"	830	194	#5	5"	30'- 9"	6,222
6	7'-0"	7'-0"	7"	7"	194	#5	5"	45'-10"	9,274	162	#4	6"	12'-11"	1,398	7'- 8"	830	194	#5	5"	38'- 4"	7,756

NUMBER OF SPANS	Bars F_1~#4 No.	Spa	Length	Wt	Bars F_2~#4 at 1'-6" Max No.	Length	Wt	Bars M~#4 at 1'-6" Max No.	Length	Wt	Bars Y & Z~#4 at 10" Max No.	Bar Y Length	Bar Y Wt	Bar Z Length	Bar Z Wt	Bars H 4~#4 Length	Weight	Bars K No.	Weight
2	20	8"	39'-9"	531	54	39'-9"	1,434	56	3'- 0"	112	49	4'- 6"	147	7'- 0"	229	15'- 6"	41	34	97
3	30	8"	39'-9"	797	77	39'-9"	2,045	56	3'- 0"	112	98	4'- 6"	295	7'- 0"	458	23'- 1"	62	48	136
4	40	8"	39'-9"	1,062	100	39'-9"	2,655	56	3'- 0"	112	147	4'- 6"	442	7'- 0"	687	30'- 8"	82	64	182
5	50	8"	39'-9"	1,328	123	39'-9"	3,266	56	3'- 0"	112	196	4'- 6"	589	7'- 0"	916	38'- 3"	102	80	227
6	60	8"	39'-9"	1,593	146	39'-9"	3,877	56	3'- 0"	112	245	4'- 6"	736	7'- 0"	1,146	45'-10"	122	94	267
2	20	8"	39'-9"	531	54	39'-9"	1,434	56	4'- 0"	150	49	4'- 6"	147	9'- 0"	295	15'- 6"	41	34	97
3	30	8"	39'-9"	797	77	39'-9"	2,045	56	4'- 0"	150	98	4'- 6"	295	9'- 0"	589	23'- 1"	62	48	136
4	40	8"	39'-9"	1,062	100	39'-9"	2,655	56	4'- 0"	150	147	4'- 6"	442	9'- 0"	884	30'- 8"	82	64	182
5	50	8"	39'-9"	1,328	123	39'-9"	3,266	56	4'- 0"	150	196	4'- 6"	589	9'- 0"	1,178	38'- 3"	102	80	227
6	60	8"	39'-9"	1,593	146	39'-9"	3,877	56	4'- 0"	150	245	4'- 6"	736	9'- 0"	1,473	45'-10"	122	94	267
2	20	8"	39'-9"	531	60	39'-9"	1,593	56	5'- 0"	187	49	4'- 6"	147	11'- 0"	360	15'- 6"	41	34	97
3	30	8"	39'-9"	797	85	39'-9"	2,257	56	5'- 0"	187	98	4'- 6"	295	11'- 0"	720	23'- 1"	62	48	136
4	40	8"	39'-9"	1,062	110	39'-9"	2,921	56	5'- 0"	187	147	4'- 6"	442	11'- 0"	1,080	30'- 8"	82	64	182
5	50	8"	39'-9"	1,328	135	39'-9"	3,585	56	5'- 0"	187	196	4'- 6"	589	11'- 0"	1,440	38'- 3"	102	80	227
6	60	8"	39'-9"	1,593	160	39'-9"	4,248	56	5'- 0"	187	245	4'- 6"	736	11'- 0"	1,800	45'-10"	122	94	267
2	20	8"	39'-9"	531	66	39'-9"	1,752	56	6'- 0"	224	49	4'- 6"	147	13'- 0"	426	15'- 6"	41	34	97
3	30	8"	39'-9"	797	93	39'-9"	2,469	56	6'- 0"	224	98	4'- 6"	295	13'- 0"	851	23'- 1"	62	48	136
4	40	8"	39'-9"	1,062	120	39'-9"	3,186	56	6'- 0"	224	147	4'- 6"	442	13'- 0"	1,277	30'- 8"	82	64	182
5	50	8"	39'-9"	1,328	147	39'-9"	3,903	56	6'- 0"	224	196	4'- 6"	589	13'- 0"	1,702	38'- 3"	102	80	227
6	60	8"	39'-9"	1,593	174	39'-9"	4,620	56	6'- 0"	224	245	4'- 6"	736	13'- 0"	2,128	45'-10"	122	94	267
2	20	8"	39'-9"	531	66	39'-9"	1,752	56	7'- 0"	262	49	4'- 6"	147	15'- 0"	491	15'- 6"	41	34	97
3	30	8"	39'-9"	797	93	39'-9"	2,469	56	7'- 0"	262	98	4'- 6"	295	15'- 0"	982	23'- 1"	62	48	136
4	40	8"	39'-9"	1,062	120	39'-9"	3,186	56	7'- 0"	262	147	4'- 6"	442	15'- 0"	1,473	30'- 8"	82	64	182
5	50	8"	39'-9"	1,328	147	39'-9"	3,903	56	7'- 0"	262	196	4'- 6"	589	15'- 0"	1,964	38'- 3"	102	80	227
6	60	8"	39'-9"	1,593	174	39'-9"	4,620	56	7'- 0"	262	245	4'- 6"	736	15'- 0"	2,455	45'-10"	122	94	267

QUANTITIES

NUMBER OF SPANS	Per foot of Barrel Conc (CY)	Reinf (Lb)	Curb Conc (CY)	Reinf (Lb)	Total Conc (CY)	Reinf (Lb)
2	0.875	225.1	1.2	138	36.2	9,141
3	1.267	333.2	1.7	198	52.4	13,524
4	1.660	441.2	2.3	264	68.7	17,910
5	2.052	549.2	2.9	329	85.0	22,297
6	2.445	657.2	3.4	389	101.2	26,678
2	0.940	230.4	1.2	138	38.8	9,353
3	1.354	340.1	1.7	198	55.9	13,801
4	1.768	449.7	2.3	264	73.0	18,253
5	2.182	559.4	2.9	329	90.2	22,705
6	2.596	669.1	3.4	389	107.2	27,151
2	1.005	239.6	1.2	138	41.4	9,722
3	1.440	352.3	1.7	198	59.3	14,289
4	1.876	464.9	2.3	264	77.3	18,860
5	2.312	577.6	2.9	329	95.4	23,431
6	2.747	690.1	3.4	389	113.3	27,994
2	1.069	248.9	1.2	138	44.0	10,093
3	1.527	364.5	1.7	198	62.8	14,778
4	1.984	480.1	2.3	264	81.7	19,468
5	2.441	595.7	2.9	329	100.5	24,157
6	2.899	711.3	3.4	389	119.4	28,840
2	1.134	254.2	1.2	138	46.6	10,304
3	1.613	371.4	1.7	198	66.2	15,055
4	2.092	488.7	2.3	264	86.0	19,810
5	2.571	605.9	2.9	329	105.7	24,565
6	3.050	723.1	3.4	389	125.4	29,313

Deformed welded wire reinforcement (WWR) meeting the requirements of ASTM A1064 may be used to replace conventional reinforcement shown at the Contractor's option. The area of required reinforcement may be reduced by the ratio of 60 ksi / 70 ksi. Spacing of WWR is limited to 4" Min and 18" Max. When required, provide lap splices in the WWR of the same length required for the equivalent bar size, rounded up for wire sizes between conventional bar sizes.

Example Conversion: Replacement of No. 6 Gr 60 at 6" Spacing with WWR.
WWR required = (0.44 sq in/ 0.5') x (60 ksi/70 ksi) = 0.754 sq in/ft.
If D30.6 wire is used to meet the 0.754 sq in/ft requirement in this example, the required spacing = (0.306 sq in/ 0.754 sq in/ft) x 12 in/ft = 4.87" Max spacing.
Required lap length for the provided D30.6 wire is 2'-2" (Lap required for uncoated No. 5 bars, as shown in Item 440).

HL93 LOADING

Texas Department of Transportation
Bridge Division

MULTIPLE BOX CULVERTS CAST-IN-PLACE
7'-0" SPAN
0' TO 10' FILL

MC-7-10

FILE: mc710ste.dgn	DN: GAF	CK: LMW	DW: BWH/TxDOT	CK: GAF
© TxDOT February 2010	DISTRICT	FEDERAL AID PROJECT		SHEET
REVISIONS 10-12: Added WWR	COUNTY	CONTROL	SECT	JOB	HIGHWAY

DISCLAIMER:
The use of this standard is governed by the "Texas Engineering Practice Act". No warranty of any kind is made by TxDOT for any purpose whatsoever. TxDOT assumes no responsibility for the conversion of this standard to other formats or for incorrect results or damages resulting from its use.

LEVELS DISPLAYED
ACC:

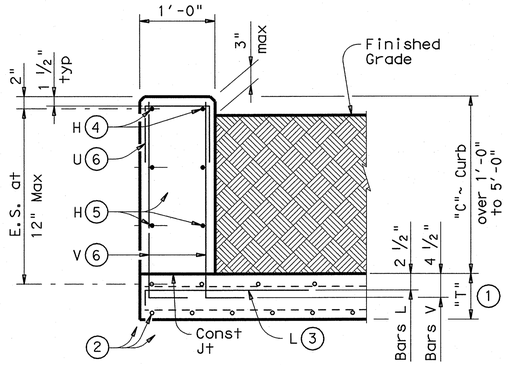

TYPICAL SECTION

Used for Curbs over 1'-0" to 5'-0"

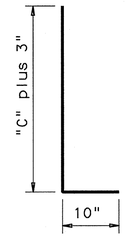

BARS V (#5) 6

Spaced at 12" max

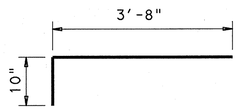

BARS L (#5) 3

Spaced at 12" max

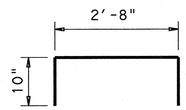

OPTIONAL BARS L (#5) 3 7

Spaced at 12" max

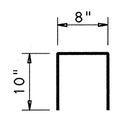

BARS U (#4) 6

Spaced at 12" max

1. "T" is equal to the culvert top slab thickness. For Precast Boxes with slabs less than 7", see SCP-MD Standard for additional details.
2. Normal culvert slab bars adjusted as necessary to clear obstructions.
3. Place bars L as shown. Tilt hook as necessary to maintain cover.
4. Place normal culvert curb bars H (#4) as shown. Adjust as necessary to clear obstructions.
5. Additional bars H (#4) as required to maintain 12" max spa.
6. Replace normal culvert curb bars K with one bar U and two bars V as shown spaced at 12" max. Adjust length of bars V as necessary to maintain clear cover.
7. Optional bars L are to be used only for precast box culverts with 3'-0" closure pour.
8. Quantities shown are for contractor's information only. Quantities are per linear foot of curb length. The values for each section type in table can be interpolated for intermediate values of curb height, "C". Quantity includes bars K (when applicable).

TABLE OF ESTIMATED CURB QUANTITIES 8

Curb Height "C"	Conc (CY/LF)	Reinf Steel (Lb/LF)
1'-0"	0.037	8.9
1'-6"	0.056	14.3
2'-0"	0.074	15.4
2'-6"	0.093	17.7
3'-0"	0.111	18.8
3'-6"	0.130	21.2
4'-0"	0.148	22.2
4'-6"	0.167	24.6
5'-0"	0.185	25.6

GENERAL NOTES:

Designed according to current AASHTO LRFD Specifications.

These extended curb details have sufficient strength to allow for future retrofit of Type T6 railing. These details are suitable for use with PR1, PR2 and PR3 type rails. These details are not suitable for the mounting of other rail types. For new construction using T6 railing, use the T6-CM standards.

All reinforcing shall be Grade 60. Adjust reinforcing as necessary to provide 1 1/4" cover.

All concrete for curbs shall be Class "C" with a minimum compressive strength of 3600 psi.

This Curb shall be considered as part of the Box Culvert for payment.

For vehicle safety, the top of the curb shall project no more than 3" above the finished grade.

DISCLAIMER:
The use of this standard is governed by the "Texas Engineering Practice Act". No warranty of any kind is made by TxDOT for any purpose whatsoever. TxDOT assumes no responsibility for the conversion of this standard to other formats or for incorrect results or damages resulting from its use.

LEVELS DISPLAYED

PATH:

Texas Department of Transportation
Bridge Division

EXTENDED CURB DETAILS

FOR BOX CULVERTS WITH CURBS OVER 1'-0" TO 5'-0" TALL

ECD

FILE: ecdstde1.dgn	DN: GAF	CK:	DW: TxDOT	CK: GAF
© TxDOT February 2010	DISTRICT	FEDERAL AID PROJECT		SHEET
REVISIONS				
	COUNTY	CONTROL	SECT	JOB	HIGHWAY

DISCLAIMER:
The use of this standard is governed by the "Texas Engineering Practice Act". No warranty of any kind is made by TxDOT for any purpose whatsoever. TxDOT assumes no responsibility for the conversion of this standard to other formats or for incorrect results or damages resulting from its use.

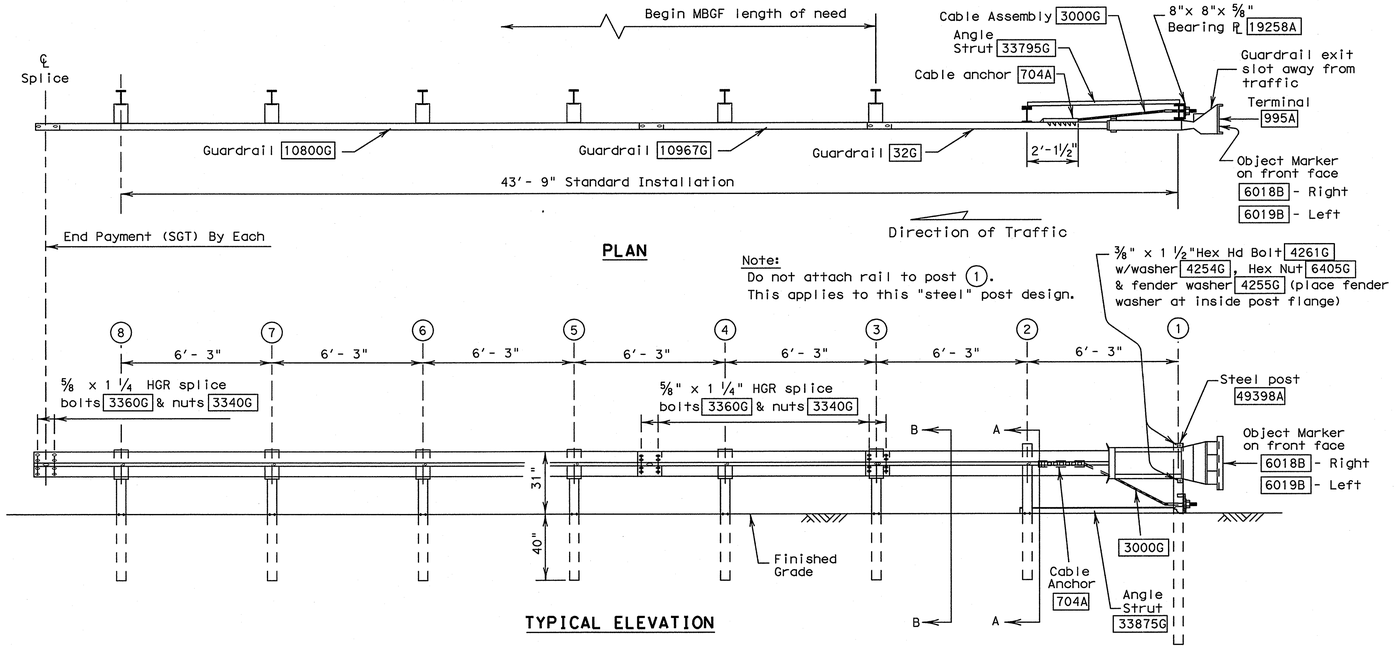

GENERAL NOTES

1. For additional information contact: Trinity Highway Products, 1-800-527-6050.
2. All bolts, nuts, cable assemblies, cable anchors, steel tubes & bearing plates shall be galvanized.
3. SGT's placed within the "minimum" 150 ft. radius, shall be a installed straight. Standard rail elements may be installed within the radius, without special fabrication.
4. A flare rate of 25:1 may be used to prevent the terminal head from encroaching on the shoulder. The flare may be decreased or eliminated for specific installations, if directed by the Engineer.
5. If solid rock is encountered. See the manufacturer's installation manual for the proper installation guidance.
6. The breakaway cable assembly must be taut. A locking device, (vice grips or channel lock pliers) should be used to prevent the cable from twisting when tightening the nuts.
7. Hinge bolts shall not be set below finished grade. At curb locations the posts shall be installed at the proper ground elevation behind the curb. The posts will then require field drilling new holes to accommodate the rail to post connection bolt to maintain the proper height of the rail above the gutter pan. The excess post length above the rail will be removed as directed by the Engineer.
8. An object marker shall be installed on the front of the impact head as detailed on D&OM(VIA).
9. A special site evaluation should be considered, prior to using this end treatment where there is less than 25 feet between the extrusion side of the end treatment and any adjacent driving lane.

BILL OF MATERIAL

#	Qty.	DESCRIPTION
32G	1	Guardrail (12 Ga) at 12'- 6"
10967G	1	Guardrail (12 Ga) at 9'- 4 ½"
10800G	1	Guardrail (12 Ga) at 25'- 0"
49398A	1	HBA Steel Post - Post 1 Top
33873A	1	HBA Steel Post - Post 1 Bottom
15000G	7	SYT Steel Post - Posts 2 thru 8
33795G	1	Angle Strut (ET/SYT/HBA)
4076B	6	Block - 14"x 6"x 8"
19258A	1	Bearing Plate - 8"x 8"x ⅝"
704A	1	Cable Anchor
3000G	1	Cable Assembly (¾"x 78")
995A	1	ET-Plus Extruder
6018B	1	Right - Object Marker
6019B	1	Left - Object Marker
3340G	31	⅝" Hex Nut
3360G	25	⅝" x 1 ¼" HGR Splice Bolt
3500G	6	⅝" x 10" Post Bolt
3701G	2	¾" Flat Washer
3704G	2	¾" Hex Nut
3717G	2	¾" x 2 ½" Hex HD Bolt (A325) ~ Post 1
3900G	2	1" Flat Washer
3910G	2	1" Hex Nut
4254G	4	⅜" Flat Washer
4255G	2	⅜" Fender Washer (1 ½" OD)
4258G	2	⅜" Lockwasher
4261G	2	⅜" x 1 ½" Hex HD Bolt (Grade 5)
4389G	2	7/16" Flat Washer
4390G	2	7/16" x 1 ½" Hex HD Bolt ~ Post 2
4393G	2	7/16" Lockwasher
4396G	2	7/16" Hex Nut
4699G	2	¾" Lockwasher
6321G	2	⅜" x 2" Hex HD Bolt (Grade 5) ~ Post 1
6405G	4	⅜" Hex Nut
19948G	2	Plate Washer ~ Post 2

Note: Site Condition(s)

Site conditions may exist where grading is required for the proper installation of metal guard fence and end treatments.

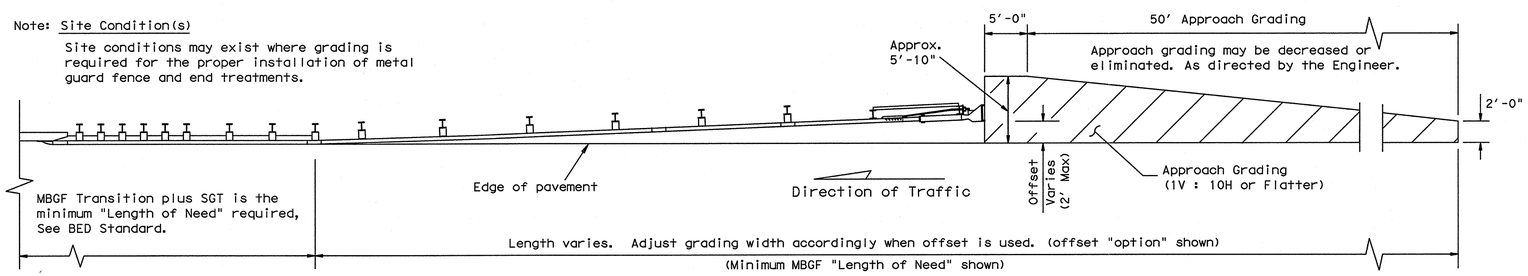

GRADING AT GUARDRAIL END TREATMENTS

Texas Department of Transportation — Design Division Standard

SINGLE GUARDRAIL TERMINAL (ET-31) (STEEL POST)

SGT(7S)31-11

FILE: sgt7s311.dgn	DN: TxDOT	CK: AM	DW: BD	CK:
© TxDOT December 2011	CONT	SECT	JOB	HIGHWAY
REVISIONS				
	DIST	COUNTY		SHEET NO.

DATE:
FILE:

P-201312-01

DISCLAIMER:
The use of this standard is governed by the "Texas Engineering Practice Act". No warranty of any kind is made by TxDOT for any purpose whatsoever. TxDOT assumes no responsibility for the conversion of this standard to other formats or for incorrect results or damages resulting from its use.

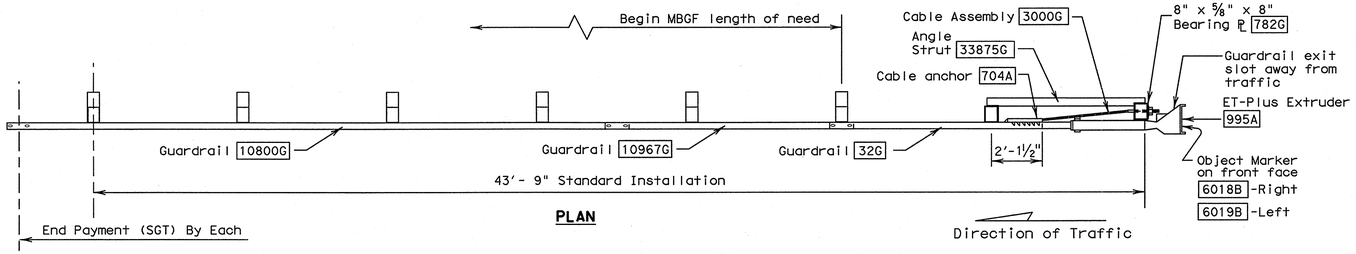

PLAN

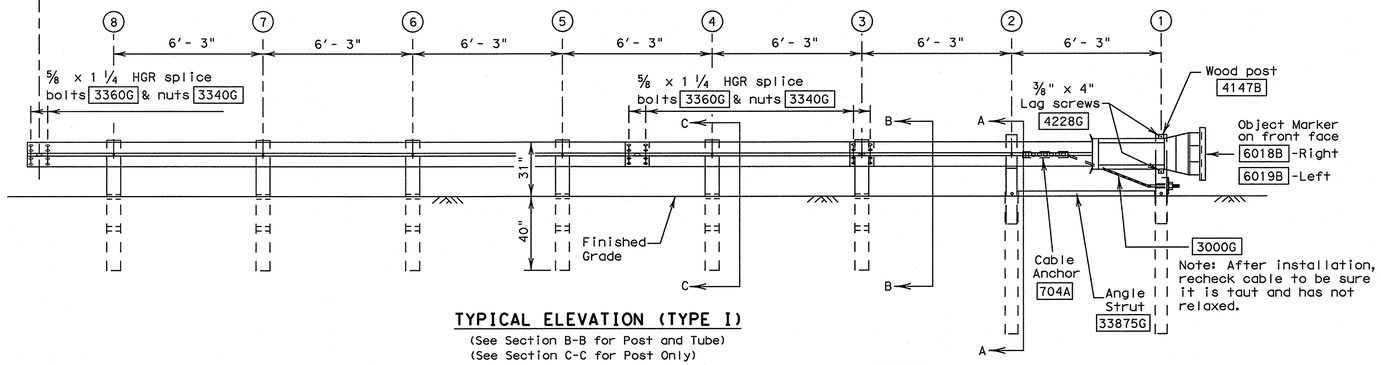

TYPICAL ELEVATION (TYPE I)

(See Section B-B for Post and Tube)
(See Section C-C for Post Only)

Note:
Drive nails & bend over to prevent plate rotation

BEARING PLATE

782G

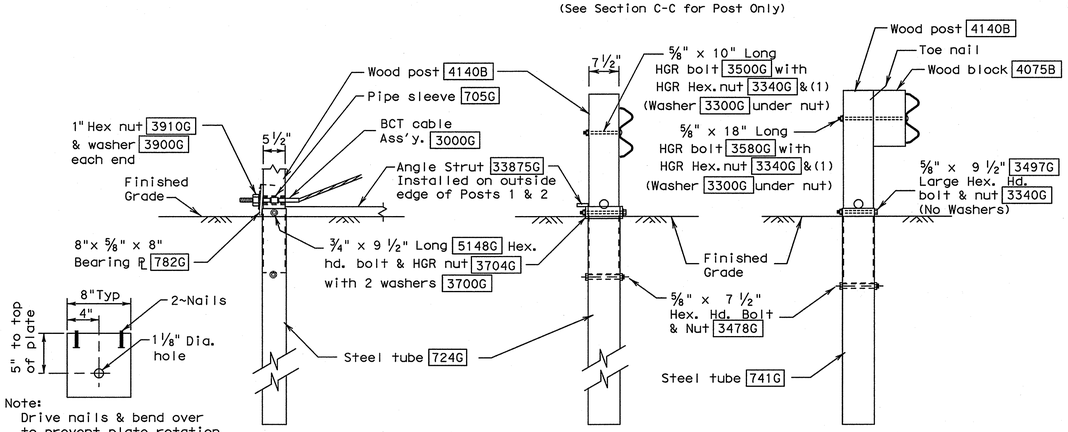

SECTION A-A

(at post 2)

SECTION B-B

(Typ. at Posts 3 & 4, Type II)
(Typ. at Posts 3 Thru 8, Type III)

PARTIAL VIEW AT POST#1

See the manufacturers installation manual for additional information.

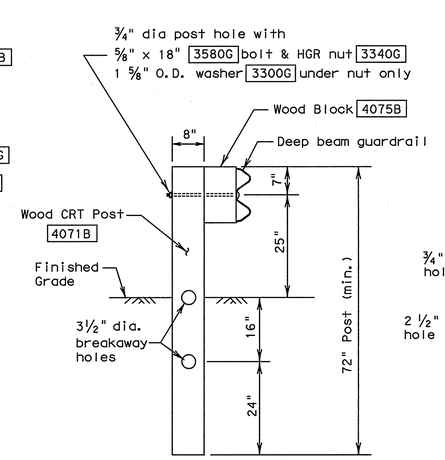

SECTION C-C

(Typ. at post only positions)

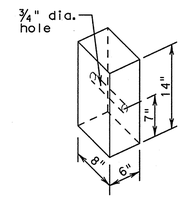

WOOD BLOCK

4075B

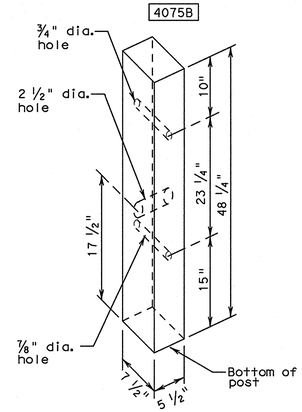

All measurements should be taken from bottom of posts.

WOOD POST

4140B

POST & TUBE OPTIONS			
Type I	Posts	1	thru 2
Type II	Posts	1	thru 4
Type III	Posts	1	thru 8

Note: Site Condition(s)
Site conditions may exist where grading is required for the proper installation of metal guard fence and end treatments.

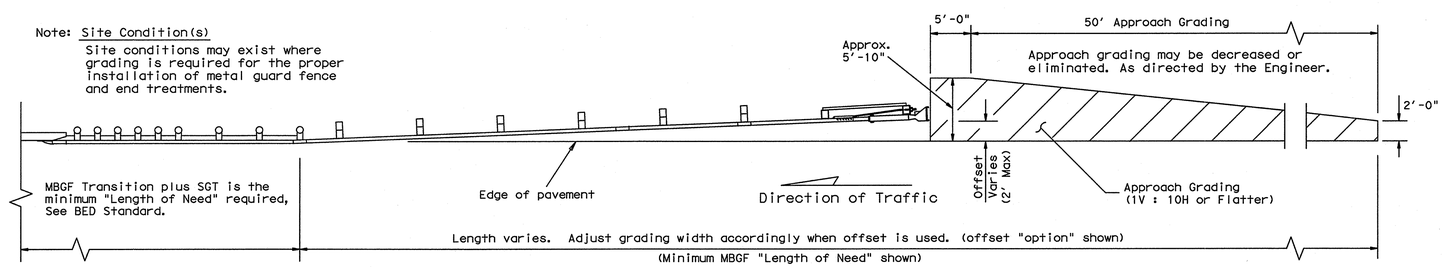

GRADING AT GUARDRAIL END TREATMENTS

GENERAL NOTES

1. For additional information contact: Trinity Highway Products, 1-800-527-6050.
2. The Type of SGT unit will be specified elsewhere in the plans. Numbers in circles indicate post position. The Type of SGT unit chosen is a maintenance consideration and does not affect the systems performance.

Post & Tube Options		Post Only
Type I	Posts 1 thru 2	Posts 3 thru 8
Type II	Posts 1 thru 4	Posts 5 thru 8
Type III	Posts 1 thru 8	

3. SGT's placed within the "minimum" 150 ft. radius, shall be installed straight. Standard rail elements may be installed within the radius, without special fabrication.
4. All bolts, nuts, cable assemblies, cable anchors, steel tubes & bearing plates shall be galvanized.
5. A flare rate of 25:1 may be used to prevent the terminal head from encroaching on the shoulder. The flare may be decreased or eliminated for specific installations, if directed by the Engineer.
6. The steel tubes shall not protrude more than 4 inches above ground. Site grading may be necessary to meet this requirement.
7. The steel tubes may be driven with an approved driving head. They shall not be driven with the wood post in the tube. If the steel tubes are placed in drilled holes, the backfill material must be satisfactorily compacted to prevent tube settlement.
8. If solid rock is encountered. See the manufacturer's installation manual for the proper installation guidance.
9. The breakaway cable assembly must be taut. A locking device, (vice grips or channel lock pliers) should be used to prevent the cable from twisting when tightening the nuts.
10. The wood blocks shall be "toe nailed" to the rectangular wood posts to prevent them from turning when the wood shrinks.
11. For curb installations, the soil tubes and posts shall be installed at the proper ground elevation behind the curb. The posts will then require field drilling new holes to accommodate the rail to post connection bolt to maintain the proper height of the rail above the gutter pan. The excess post length above the rail will be removed as directed by the Engineer.
12. An object marker shall be installed on the front of the impact head as detailed on D&OM(VIA).
13. A special site evaluation should be considered, prior to using this end treatment where there is less than 25 feet between the extrusion side of the end treatment and any adjacent driving lane.

Code #	POST & TUBE OPTIONS Type I Qty.	Type II Qty.	Type III Qty.	BILL OF MATERIAL DESCRIPTION
32G	1	1	1	Guardrail (12 Ga) at 12'- 6" (ANC)
10967G	1	1	1	Guardrail (12 Ga) at 9'- 4 1/2"
10800G	1	1	1	Guardrail (12 Ga) at 25'- 0"
724G	2	2	2	Steel Tube - 6"x 8"x 72"x 1/8" min
741G	0	2	6	Steel Tube - 6" x 8" x 54" x 1/8" min
4140B	2	4	8	Wood Posts - 5 1/2" x 7 1/2" x 48 1/4"
4071B	6	4	0	Wood CRT Posts - 6"x 8"x 72"
4075B	6	6	6	Wood Block - 6"x 8"x 14"
705G	1	1	1	Pipe Sleeve - 2" std. pipe x 5 1/2"
782G	1	1	1	Bearing Plate - 8"x 8"x 5/8"
704A	1	1	1	Cable Anchor Bracket
3000G	1	1	1	Cable Assembly (3/4" x 78")
33875G	1	1	1	Angle Strut
995A	1	1	1	ET-Plus Extruder
5148G	2	2	2	3/4" x 9 1/2" Hex Hd (Top of tubes 1&2)A325
3300G	7	7	7	5/8" Washers
3478G	2	4	8	5/8" x 7 1/2" Hex Bolt
3500G	1	1	1	5/8" x 10" Post Bolt (Post 2)
3580G	6	6	6	5/8" x 18" Post Bolt (Posts 3 thru 8)
3360G	24	24	24	5/8" x 1 1/4" Splice Bolt
3340G	33	37	45	5/8" Hex Nut
4228G	2	2	2	3/8" x 4" Lag Screw
3910G	2	2	2	1" Hex Nut
3900G	2	2	2	1" Washer
6018B	1	1	1	Right - Object Marker
6019B	1	1	1	Left - Object Marker
3700G	4	4	4	3/4" Washer
3704G	2	2	2	3/4" Heavy Hex Nut
3497G	0	2	6	5/8" x 9 1/2" Hex Hd (Top of Tubes 3-8)A307

Texas Department of Transportation — Design Division Standard

SINGLE GUARDRAIL TERMINAL (ET-31) (WOOD POST)

SGT(7)31-11

FILE: sgt73111.dgn	DN: TxDOT	CK: AM	DW: BD	CK:
© TxDOT December 2011	CONT	SECT	JOB	HIGHWAY
REVISIONS				
	DIST	COUNTY		SHEET NO.

DATE:
FILE:

P-201312-01

DISCLAIMER:
The use of this standard is governed by the "Texas Engineering Practice Act". No warranty of any kind is made by TxDOT for any purpose whatsoever. TxDOT assumes no responsibility for the conversion of this standard to other formats or for incorrect results or damages resulting from its use.

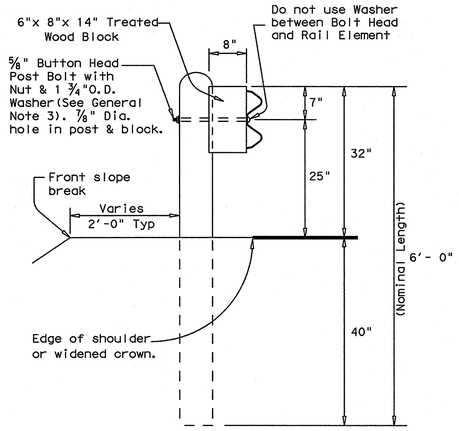

TYPICAL POST

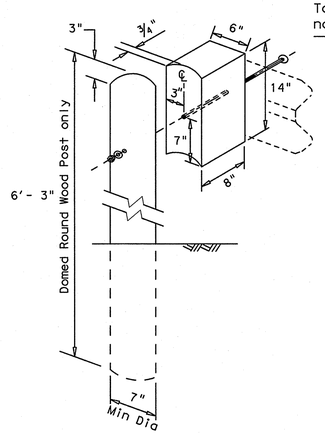

WOOD BLOCK TO ROUND WOOD POST

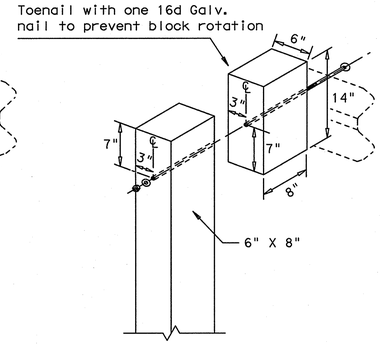

WOOD BLOCK TO RECTANGULAR WOOD POST

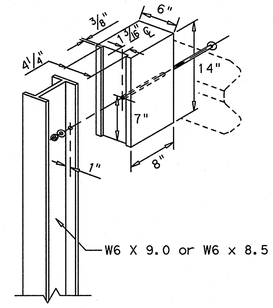

WOOD BLOCK TO STEEL POST

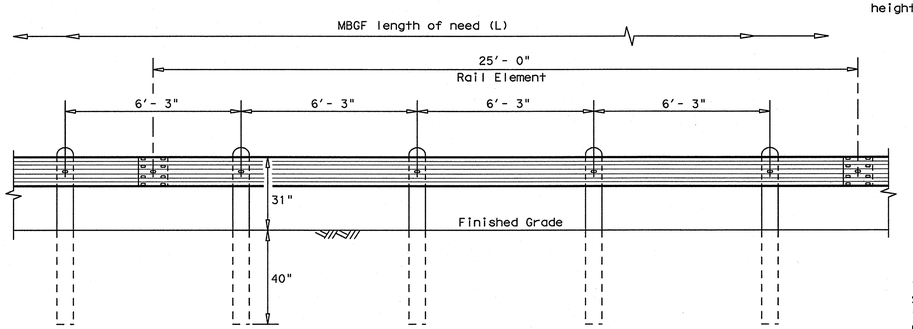

ELEVATION
MID-SPAN RAIL SPLICE

Showing a 25'- 0" section of W-Beam rail, 12'- 6" rail sections may also be supplied (See General Note 2)

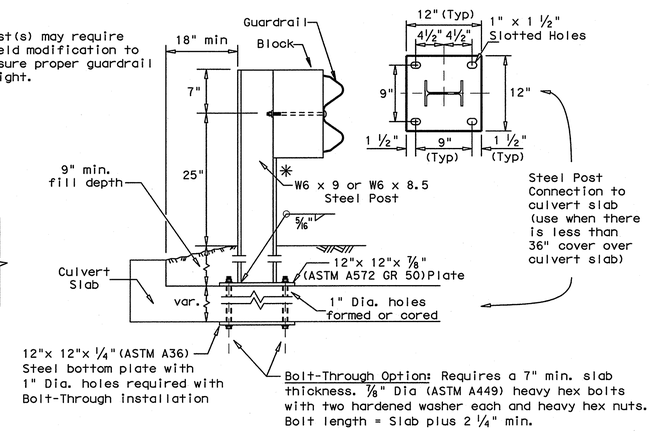

LOW FILL CULVERT POST

For use on culverts up to 50 ft. in length. Culverts of 25 ft. or less, See GF(31)LS standard for "Long Span" option.

Epoxy Note:
Epoxy Anchor Option: This option may only be used if the culvert slab is 8" min. thick. Threaded anchor rods must be 7/8" Dia. ASTM A449 or A193 Grade B7 with heavy hex nut, and one hardened washer each. Embed anchor rods 6" with Hilti HIT RE 500 epoxy adhesive. Other Type III Class C epoxy adhesives meeting the requirements of DMS-6100, "Epoxies and Adhesives", may be used if it can be demonstrated that they meet or exceed the strength of Hilti HIT RE 500 with the same embedment depth and threaded rod dia. Follow the manufacturer's requirements for installing epoxied threaded rods. Extend rods 1/4" min. beyond nut.

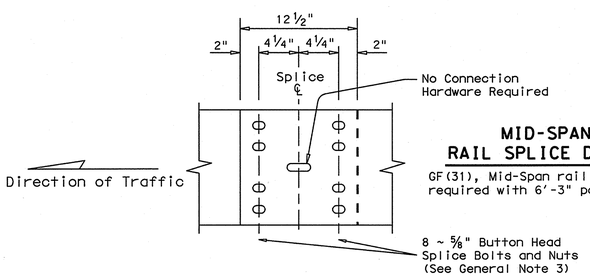

MID-SPAN
RAIL SPLICE DETAIL

GF(31), Mid-Span rail splices are required with 6'-3" post spacings.

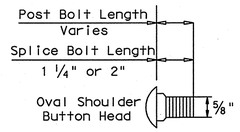

BUTTON HEAD BOLT

Post and Splice Bolts
(See General Note 3)

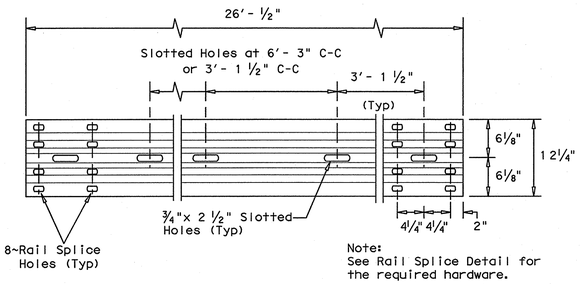

ELEVATION 25'- 0" (NOM.) W-BEAM SECTION

12'- 6" rail sections may also be supplied (See General Note 2)

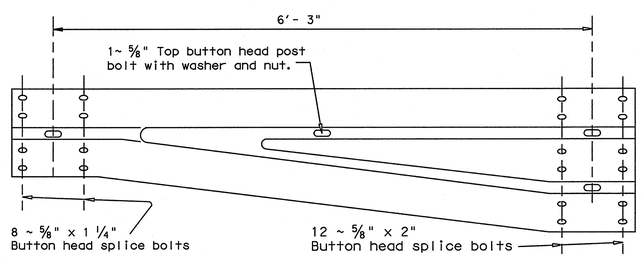

NON-SYMMETRICAL TRANSITION
FROM W-BEAM TO CONCRETE RAIL (10 GA.)

(See GF(31)DAT for Downstream Connection to Concrete Rail)

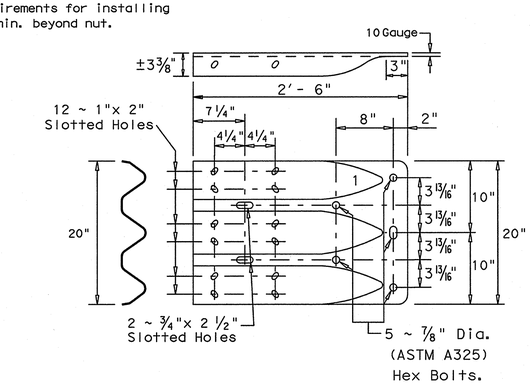

THRIE-BEAM TERMINAL CONNECTION (10 GA.)

(See General Note 3 for required hardware)

GENERAL NOTES

1. The type of post (round wood post, rectangular wood post, or steel post) will be as shown in the plans. The exact position of MBGF shall be shown in the plans or as directed by the Engineer. Steel posts to be galvanized in accordance with Item 445, "Galvanizing."
2. Rail element shall meet the requirements of Item 540, "Metal Beam Guard Fence" except as modified in the plans. The Contractor may furnish rail elements of 25'- 0", or 12'- 6" (nom.) lengths. Rail elements may have slotted holes at 3'-1 1/2" C-C or 6'-3" C-C. A special length of rail may be manufactured to accommodate the downstream anchor terminal (DAT) and the transition sections of guardrail.
3. Button head "post" bolts (ASTM A307) shall be of sufficient length to extend through the full thickness of the nut (ASTM A563) and Type A (1 3/4" O.D.) washer and not more than 1" beyond it. Button head "splice" bolts (ASTM A307) are 5/8" x 1 1/4" (or 2" long at triple rail splices) with a 5/8" double recessed nut (ASTM A563). Thrie beam "connection" 7/8" dia. (ASTM A325) hex bolts shall be of sufficient length to extend through the full thickness of the rail, washers, and nuts.
4. Fittings (bolts, nuts, and washers) shall be galvanized in accordance with Item 445, "Galvanizing." Fittings shall be subsidiary to the bid item.
5. Crown shall be widened to accommodate the Metal Beam Guard Fence.
6. The lateral approach to the guard fence, shall have a maximum slope of 1V:10H.
7. If shown elsewhere in the plans or as directed by the Engineer, the guard fence may be flared at a rate of 25:1 or flatter.
8. Unless otherwise shown in the plans, guard fence placed in the vicinity of curbs shall be positioned so that the face of curb is located directly below or behind the face of the rail. Rail placed over curbs shall be installed so that the post bolt is located approximately 25 inches above the gutter pan or edge of shoulder.
9. If solid rock is encountered within 0 to 18" of the finished grade, drill a 22" dia. hole, or drill two 12" dia. front to back overlapping holes, 24" into the rock. If solid rock is encountered below 18", drill a 12" dia. hole, 12" into the rock or to the standard embedment depth, whichever maybe less. Any excess post length, after meeting these depths, may be field cut to ensure proper guardrail mounting height. Backfill with a cohesionless material.
10. Posts shall not be set in concrete, of any depth.
11. Special fabrication will be required at installations having a curvature of less than 150 ft. radius.
12. Unless otherwise shown in the plans, a composite material post and/or block that meets the requirements of DMS-7210, "Composite Material Posts and Blocks for Metal Beam Guard Fence" may be substituted for posts and/or blocks of similar dimensions. The Construction Division, TxDOT maintains a Material Producer List (MPL) for producers of materials conforming to DMS-7210. Only producers on the MPL may furnish composite material posts and/or blocks.
13. For posts located partially or wholly between precast box culvert units, the use of a cast-in-place concrete closure between boxes is required. See Detail "A" on Bridge Standard SCP-MD.

Texas Department of Transportation — Design Division Standard

METAL BEAM GUARD FENCE

GF(31)-11

FILE: gf3111.dgn	DN: TxDOT	CK: AM	DW: VP	CK:
© TxDOT December 2011	CONT	SECT	JOB	HIGHWAY
REVISIONS	DIST		COUNTY	SHEET NO.

DATE:
FILE:

P-201312-01

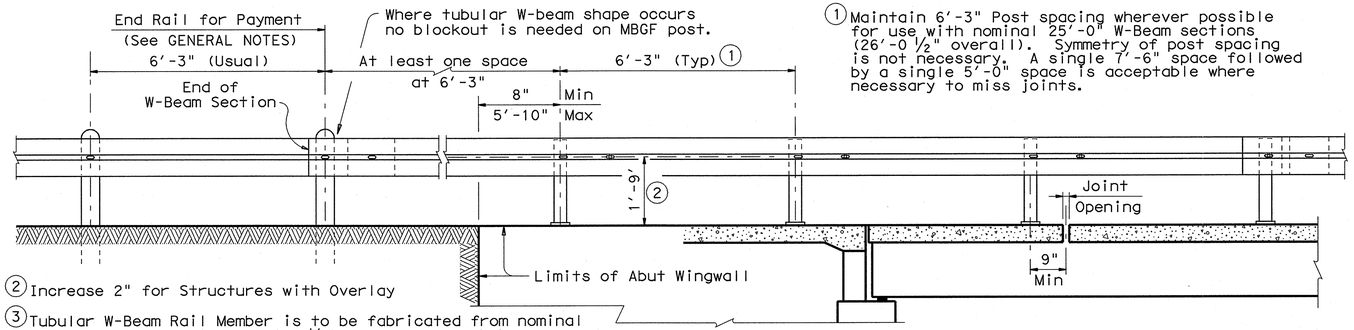

1 Maintain 6'-3" Post spacing wherever possible for use with nominal 25'-0" W-Beam sections (26'-0 1/2" overall). Symmetry of post spacing is not necessary. A single 7'-6" space followed by a single 5'-0" space is acceptable where necessary to miss joints.

2 Increase 2" for Structures with Overlay

3 Tubular W-Beam Rail Member is to be fabricated from nominal 25'-0" W-Beam sections (26'-0 1/2" overall). Additional post mounting slots are to be made in each member 15" from the standard slots at 6'-3" centers. Top and bottom seams may be continuously welded with 80% penetration in lieu of intermittent welding shown. Welds must be chipped and cleaned and the complete 27'-3 1/2" tubular member galvanized after fabrication.

4 See Section Thru Splice for Washers

ROADWAY ELEVATION OF RAIL

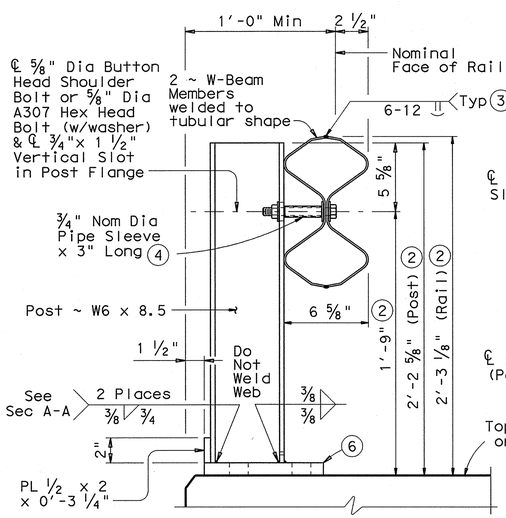

SECTION THRU RAIL

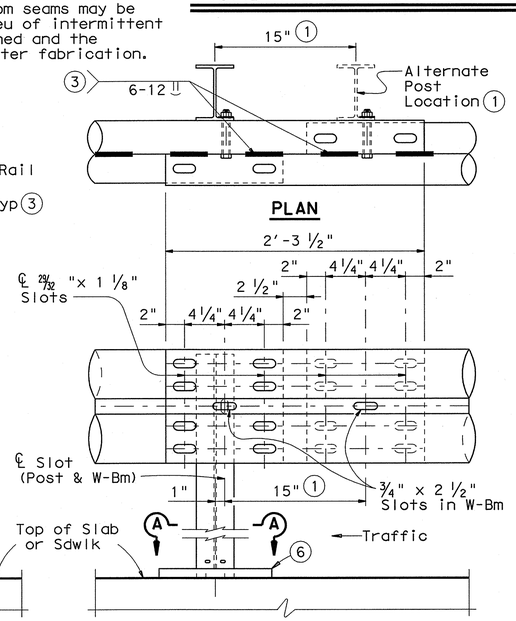

TUBULAR W-BEAM SPLICE DETAILS

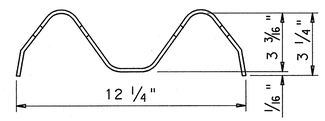

Member are 12 Gage Steel ~ Nom thickness = 0.1046" exclusive of protective coating. Actual section may vary slightly with the manufacturer.

W-BEAM SECTION

5 PL 1/4 x 6 x 0'-8" (15/16" Dia Holes)

6 PL 3/4 x 9 1/2 x 1'-0"

7 8 ~ 5/8" Splice nuts. Tack weld to bent sheet metal postioners as shown. Other suitable positioning methods or devices may be substituted. The complete splice must have 16 bolts. Each bolt will include a 1 3/4" x 3" x 3/16" plate washer or a 1 3/4"O.D. washer.

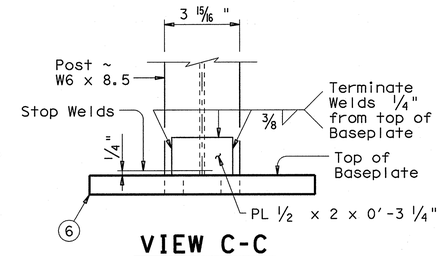

VIEW C-C

Showing Back of Post

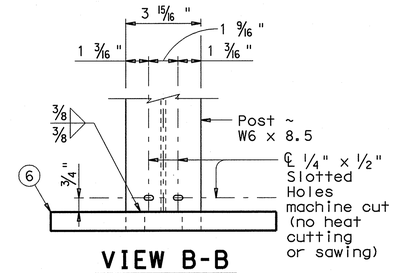

VIEW B-B

Showing Front of Post

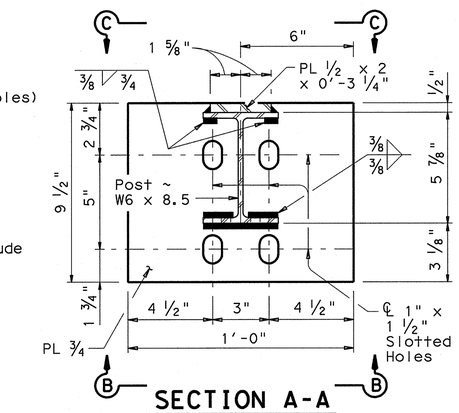

SECTION A-A

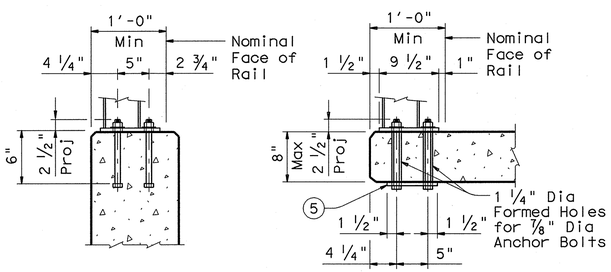

ON ABUT WINGWALL OR CIP RETAINING WALL

FOR 7" MIN TO 8" MAX CONC DEPTH

FOR CULVERTS OR SLABS GREATER THAN 8"

POST MOUNTING DETAILS

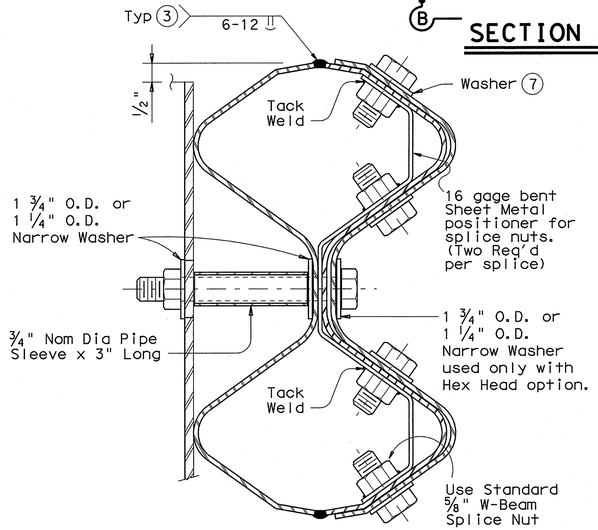

SECTION THRU SPLICE

CONSTRUCTION NOTES:

Tubular Rail Member must be extended and connected to at least the first soil embedded post at each end of the structure. More such posts must be used to utilize 25' standard sections. Approach guard fence posts must be spaced at 6'-3" adjacent to the Tubular Rail since its flexibility is similar to standard metal beam guard fence. Do not install additional posts at 3'-1 1/2" centers.

Rail must be extended across all fixed armor joints, slab span joints, or pan form joints with no change in post spacing or continuity. At expansion armor joints of 1 1/4" or less, the splice bolts nearest the joint and post mounting bolts at intervening post must be snugly tightened to allow for rail expansion. At expansion armor joints over 1 1/4", suitably longer splice holes must be provided.

Face of rail and posts must be vertical transversely unless otherwise approved by the Engineer. Posts must be perpendicular to adjacent roadway grade. Use epoxy mortar under post base plates if gaps larger than 1/16" exist.

MATERIAL NOTES:

All steel components except reinforcing must be galvanized unless otherwise shown in plans.

Anchor bolts must be 7/8" Dia ASTM A307 Grade A bolts (or A36 threaded rods with one tack welded hex nut each) with one hex nut and one hardened steel washer at each bolt (1 3/4" O.D. or 2" O.D. as directed by the Engineer). Clipped washers may be used as necessary. Threaded rods may be 0.781" minimum diameter with rolled threads. Nuts must conform to A563 requirements.

GENERAL NOTES:

This rail was evaluated based on the results of previous crash tests and approved for a NCHRP Report 350 TL-2 rating. The T6 rail is only approved for low speed use, design speeds of 45 mph and less.

This railing cannot be used on bridges with expansion joints providing more than 4" movement.

Rail anchorage details shown on this standard may require modification for select structure types. See appropriate details elsewhere in plans for these modifications.

Payment for this rail must be in increments of 25'.

Shop drawings to be submitted to the Engineer for approval are required only for the proposed rail splices at expansion joints greater than 1 1/4". For rails not requiring shop drawings, erection drawings showing splice locations must be submitted to the Engineer for approval.

Average weight of railing (6'-3" Post spacing and no Overlay) = 23 plf.

DESIGN/REPAIR CRITERIA

The posts of this rail are designed to break away on impact from an errant vehicle. The rail is designed to deflect approx. two to three feet as it contains and redirects the errant vehicle. This rail may not be installed on top of or behind curbs that project above finished grade.

Fully anchored guardfence must be attached to each end of rail.

Repairs to impact-damaged post/baseplate units are not permitted. All impact-damaged posts must be replaced with a new post/baseplate unit.

This railing is especially suitable for use on bridge width box culverts. The detail sheet titled "Box Culvert Mounting Details For Type T6 Rail, T6-CM" is then required, showing culvert curbs and wingwall modifications and additional reinforcing steel to be included as part of the railing for payment.

The use of this railing is restricted to design speeds of 45 mph or less and to horizontal curves with radius greater than 1000 feet.

DISCLAIMER:
The use of this standard is governed by the "Texas Engineering Practice Act". No warranty of any kind is made by TxDOT for any purpose whatsoever. TxDOT assumes no responsibility for the conversion of this standard to other formats or for incorrect results or damages resulting from its use.

LEVELS DISPLAYED | ACC:

Texas Department of Transportation
Bridge Division

TRAFFIC RAIL

TYPE T6

FILE: rlstd011.dgn	DN: TxDOT	CK: TxDOT	DW: JTR	CK: TxDOT
© TxDOT April 2009	DISTRICT	FEDERAL AID PROJECT		SHEET
REVISIONS				
	COUNTY	CONTROL	SECT	JOB	HIGHWAY

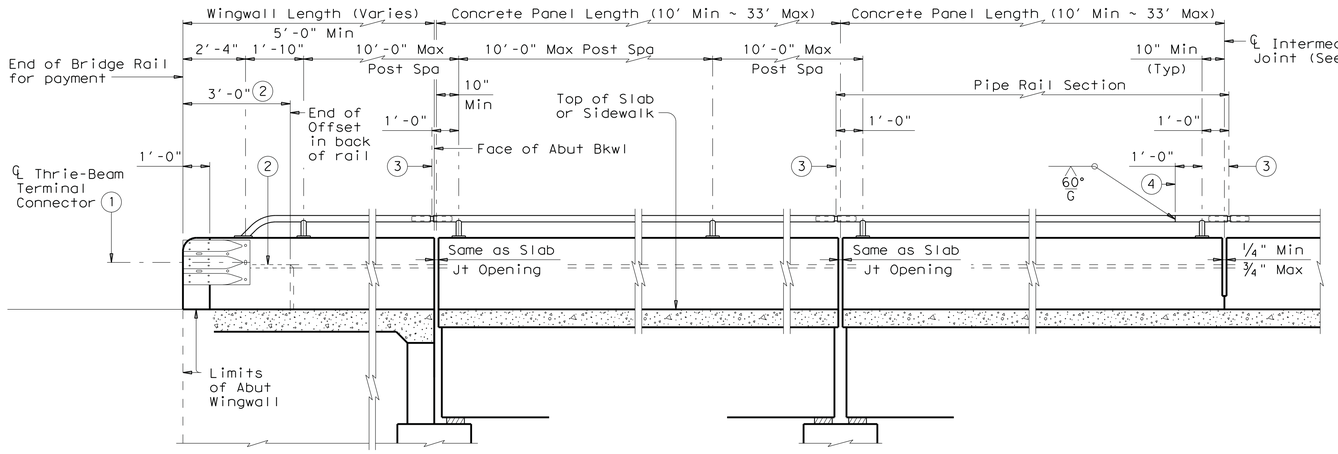

AT ABUTMENT BENTS

AT SLAB EXP JOINTS

AT INTERMEDIATE WALL JOINTS

ROADWAY ELEVATION OF RAIL

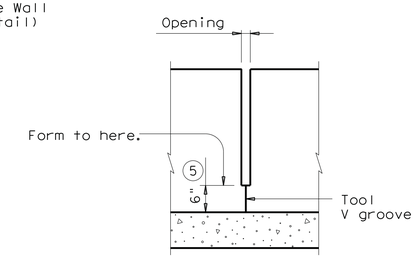

INTERMEDIATE WALL JOINT DETAIL

Provide at all interior bents without slab expansion joints. Space equally in between at 33' Max, 10' Min. Location independent of pipe rail splices.

1. Terminal Connectors and associated hardware are to be paid for under the Item "Metal Beam Guard Fence". Metal Beam Guard Fence Transitions must be attached to the bridge rail and extended along the embankment unless otherwise shown in the plans.
2. Back of rail offset may, with Engineer's approval be continued to the end of the railing.
3. ℄ Exp Joint or Splice Joint as required.
4. One shop splice per pipe rail section is permitted with minimum 85 percent penetration. The weld may be square groove, or single vee groove. Grind smooth.
5. Increase 2" for structures with overlay.
6. Bolts must be of sufficient length to extend ½" to ¾" beyond nut.
7. Bolt recesses are only required when pedestrian sidewalks are adjacent to back of rail.
8. 4 additional Bars R(#4) 3'-8" in length must be placed inside Bars S(#4) and centered 2'-0" from end of rail when Terminal Connections are required. Field bend as needed.
9. 2 ½" Std Pipe (2.875" O.D. 0.203" wall thickness)
10. 2" Std Pipe (2.375" O.D., 0.154" wall thickness)
11. ⅜" Dia Hole in bottom of pipe or tube (Minimum 1 hole between posts ~ Typ)

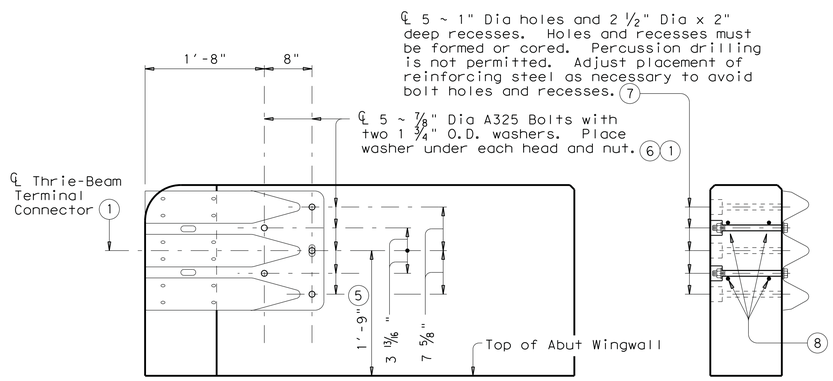

ELEVATION

SECTION

TERMINAL CONNECTION DETAILS

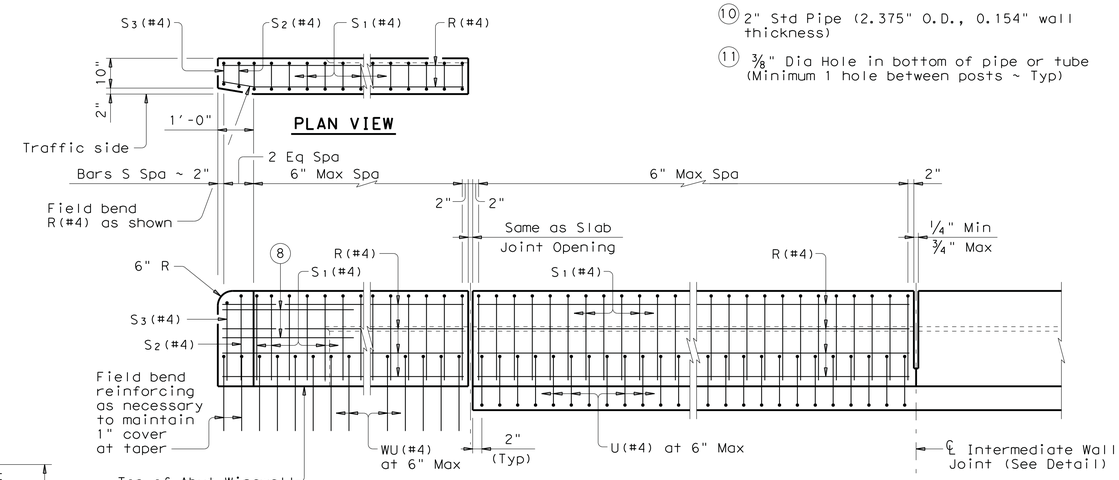

PLAN VIEW

AT ABUT WINGWALL

AT EXP JOINT

AT SLAB

AT INTERMEDIATE WALL JOINT

ELEVATION SHOWING TYPICAL REINFORCING PLACEMENT

(Showing without raised sidewalk)

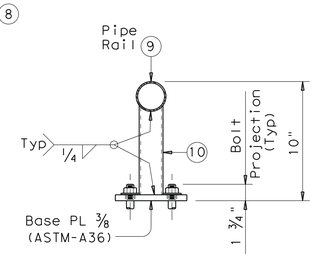

TRANSVERSE SECTION

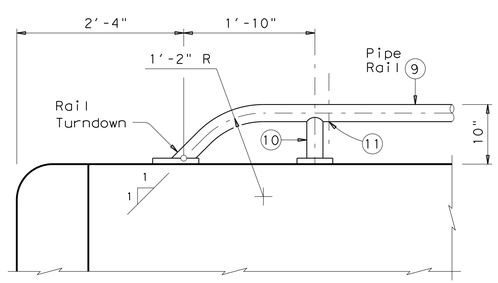

Note that at least two anchor points (as shown) are required for the Bridge Rail on the Abutment Wingwall. Longer Wingwalls may require more than two Rail anchorages.

PIPE RAIL TERMINAL DETAIL

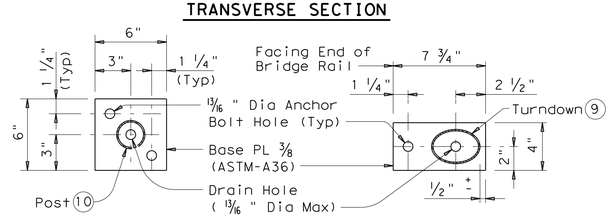

POST BASE PLATE PLAN

RAIL TURNDOWN BASE PLATE PLAN

PIPE RAIL DETAILS

The use of this railing is restricted to design speeds of 45 mph or less.

SHEET 1 OF 3

Texas Department of Transportation
Bridge Division

COMBINATION RAIL

TYPE C221

FILE: ristd018.dgn	DN: TxDOT	CK: TxDOT	DW: JTR	CK: JMH	
©TxDOT April 2009	DISTRICT	FEDERAL AID PROJECT			SHEET
REVISIONS 05-11: Wall Joint Note. 07-12: Guardrail Transition.	COUNTY		CONTROL	SECT	JOB	HIGHWAY

DISCLAIMER:
The use of this standard is governed by the "Texas Engineering Practice Act". No warranty of any kind is made by TxDOT for any purpose whatsoever. TxDOT assumes no responsibility for the conversion of this standard to other formats or for incorrect results or damages resulting from its use.

ACC:

LEVELS DISPLAYED

P-201312-01

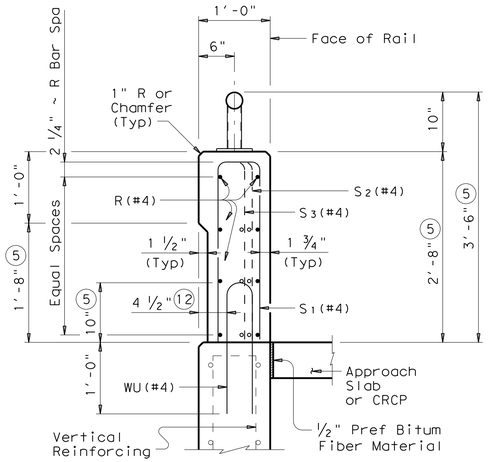

ON ABUTMENT WINGWALLS
OR CIP RETAINING WALLS

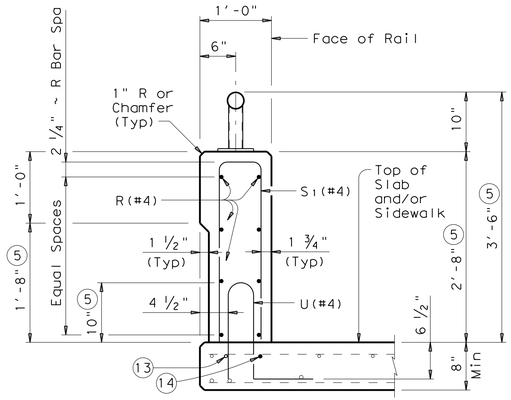

ON BRIDGE SLAB

SECTIONS THRU RAIL WITHOUT RAISED SIDEWALK

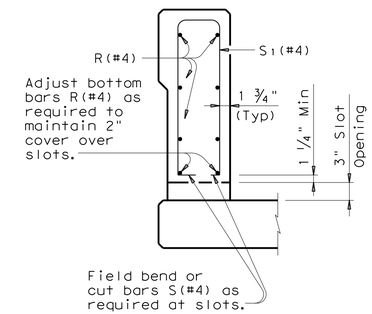

SECTION THRU OPTIONAL SIDE SLOT DRAIN

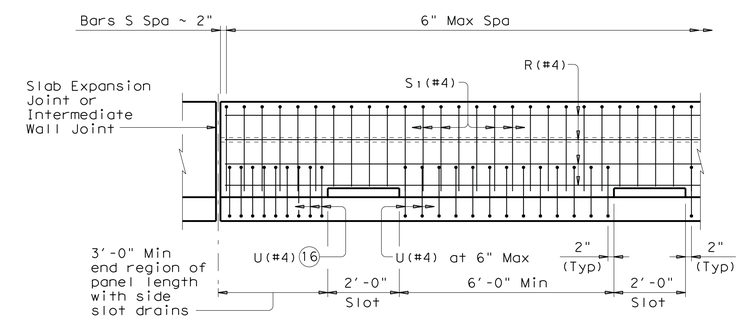

OPTIONAL SIDE SLOT DRAIN DETAIL

Note: Side Slot Drains may be used where shown elsewhere on the plans or as directed by the Engineer. Drains should not be placed over railroad tracks, lower roadways, or sidewalks. When this rail is used as a separator between a roadway surface and a sidewalk surface, side drain slots will not be permitted.

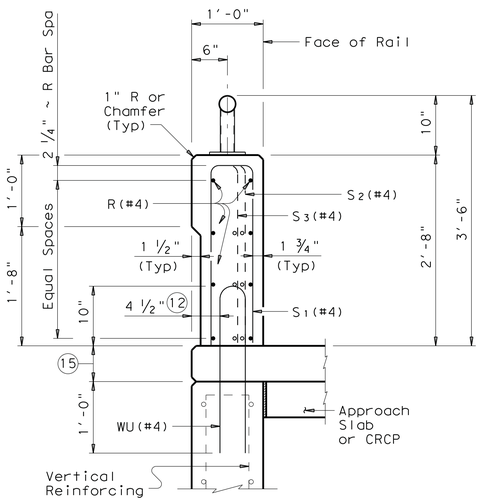

ON ABUTMENT WINGWALLS
OR CIP RETAINING WALLS

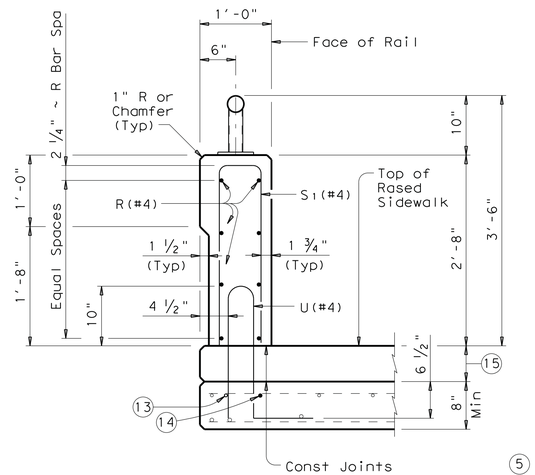

ON BRIDGE SLAB

SECTIONS THRU RAIL WITH RAISED SIDEWALK

(5) Increase 2" for structures with overlay.

(12) 5 1/2" when vertical reinforcing has closer clear cover over horizontal reinforcing in abutment wingwalls or retaining walls on traffic side of wall.

(13) As an aid in supporting reinforcement, additional longitudinal bars may be used in the slab with the approval of the Engineer. Such bars must be furnished at the Contractors expense.

(14) Top longitudinal slab bar may be adjusted laterally 3" plus or minus to tie reinforcing.

(15) Raised Sidewalk

(16) Space U(#4) bars at 4" Max when end region of panel length is less than 6'-0" to side slot drain. Space U(#4) bars at 6" Max when end region of panel length is 6'-0" and greator to side slot drain.

DISCLAIMER:
The use of this standard is governed by the "Texas Engineering Practice Act." No warranty of any kind is made by TxDOT for any purpose whatsoever. TxDOT assumes no responsibility for the conversion of this standard to other formats or for incorrect results or damages resulting from its use.

ACC:
LEVELS DISPLAYED
1

SHEET 2 OF 3

Texas Department of Transportation
Bridge Division

COMBINATION RAIL

TYPE C221

FILE: rlstd018.dgn	DN: TxDOT	CK: TxDOT	DW: JTR	CK: JMH
© TxDOT April 2009	DISTRICT	FEDERAL AID PROJECT		SHEET
REVISIONS				
05-11: Wall Joint Note. 07-12: Guardrail Transition.	COUNTY	CONTROL	SECT	JOB	HIGHWAY

P-201312-01

RAIL DATA FOR HORIZONTAL CURVES

	RADIUS TO FACE OF RAIL	MAX CHORD LENGTH	CONSTRUCT OR FABRICATE
Pipe Rail	Over 2800'	29'-0"	Straight rail panels
	Over 1400' thru 2800'	14'-6"	To required radius or to chords shown (17)
	Over 700' thru 1400'	7'-3"	
	Thru 700'	Zero	To required radius (17)

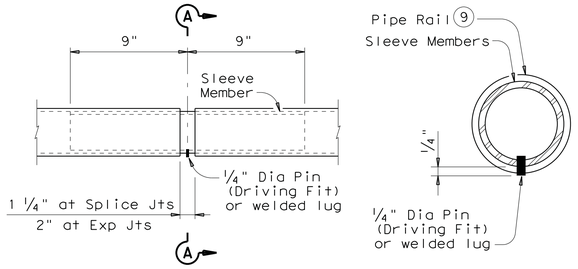

AT SPLICE OR EXP JTS

SECTION A-A

The difference between the outside dimension of sleeve and inside dimension of pipe rail must not exceed 0.167" before galvanizing. Minimum wall thickness of sleeve is 0.120".

PIPE SPLICE DETAILS

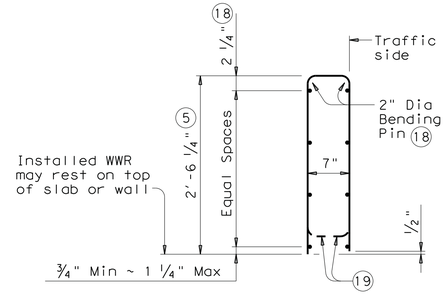

OPTIONAL WELDED WIRE REINFORCEMENT (WWR)

DESCRIPTION	LONGITUDINAL WIRES	VERTICAL WIRES
Minimum (Cumulative Total) Wire Area	1.067 Sq In.	0.267 Sq In. per Ft
	No. of Wires	Spacing
Minimum	8	4"
Maximum	10	8"
Maximum Wire Size Differential	The smaller wire must have an area of 40% or more of the larger wire.	

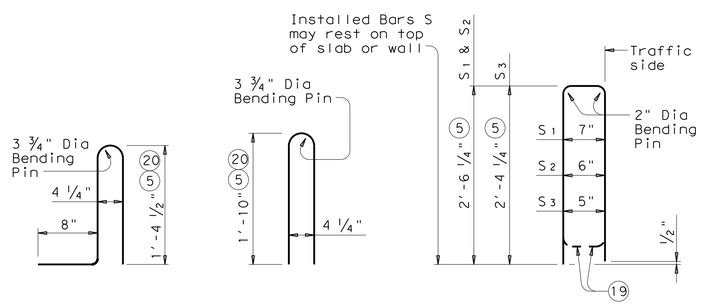

BARS U (#4)

BARS WU (#4)

BARS S (#4)

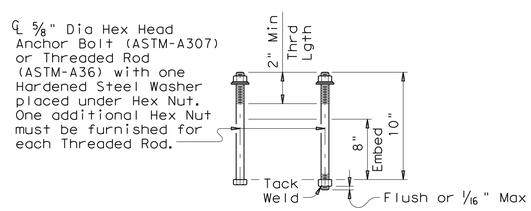

CAST-IN-PLACE (21) ANCHOR BOLT OPTIONS

(5) Increase 2" for structures with overlay.

(9) 2 1/2" Std Pipe (2.875" O.D. 0.203" wall thickness)

(17) Shop drawings for approval required for tubular steel sections.

(18) No longitudinal wires may be in top center of cage.

(19) Bend or cut as required to clear drain slots.

(20) For raised sidewalks, add sidewalk height to total bar height. Use sidewalk height at rail's location.

(21) See "Material Notes" for anchor bolt information.

CONSTRUCTION NOTES:

This railing may be constructed with slip-forms when approved by the Engineer, with equipment approved by the Engineer and when epoxy adhesive anchor bolts are used. Slip-forming parapet is not allowed if anchor bolts are cast with parapet wall. Sensor control for both line and grade must be provided. Tack welding to provide bracing for slip-form operations is acceptable. Welding can be performed at a minimum spacing of 3 ft between the cage and the anchorage. It is permissible to weld to U, WU and S bars at any location on the cage. If increased bracing is needed, additional anchorage devices must be added and welding must be performed in the upper two thirds of the cage.

Face of rail, parapet must be plumb unless otherwise approved by the Engineer. Pipe rail posts must be square to the top of parapet. Use epoxy mortar under post base plates if gaps larger than 1/16" exist.

Exposed edges of pipe rail and pipe rail posts must be rounded or chamfered to approximately 1/16" by grinding.

At the contractor's option anchor bolts may be cast with the parapet (See Cast-in-Place Anchor Bolt Options).

Pipe rail sections must not include less than two posts, and no more than four (except at Abutment

Chamfer all parapet exposed corners.

MATERIAL NOTES:

All steel components except reinforcing must be galvanized unless otherwise shown on plans.

Use Class "C" concrete. Use Class "C" (HPC) if required elsewhere.

All reinforcing must be Grade 60.

Epoxy coat all rail reinforcement if slab bars are epoxy coated.

Deformed welded wire reinforcement (WWR) may be used as an option to conventional reinforcement and must be made in accordance with ASTM A497 (Deformed Wire). Combinations of Reinforcing Steel and WWR or configurations of WWR other than shown will be permitted when the conditions in the table are satisfied.

Pipe for pipe rail must conform to ASTM A53 Grade B or A500 Grade B.

Anchor bolts must be 5/8" Dia ASTM A36 fully threaded rods with one hex nut and one hardened steel washer at each bolt. Embed threaded rods into parapet wall with a Type III Class C epoxy anchorage system. Minimum embedment depth is 3". Anchorage system chosen must be able to achieve an ultimate tensile resistance of 8.4 kips per bolt. The Contractor must provide evidence to the Engineer that this can be achieved. Evidence of adequate tensile resistance can be based on the manufacturer's published values of ultimate tensile strength (anchor spacing and edge distance must be accounted for). Anchor installation, including hole size, drilling, and clean-out, must be in accordance with the manufacturer's instructions.

Optional cast-in-place anchor bolts must be 5/8" Dia ASTM A307 Grade A bolts (or A36 threaded rods with one tack welded hex nut each) with one hex nut and one hardened steel washer at each bolt.

GENERAL NOTES:

This rail, without the pipe rail, has been evaluated and accepted to be of equal strength to railings with like geometry, which have been crash tested to meet NCHRP Report 350 TL-4 criteria. However, its use is limited to design speeds of 45 mph or less due to the presence of the pipe rail.

This railing cannot be used on bridges with expansion joints providing more than 5" movement.

Rail anchorage details shown on this standard may require modification for select structure types. See appropriate details elsewhere in plans for these modifications.

Erection drawings showing panel lengths, rail post spacing, and anchor bolt setting must be submitted to the Engineer for approval.

Average weight of railing with no overlay: 370 plf (Conc)
10 plf (Steel)

DISCLAIMER:
The use of this standard is governed by the "Texas Engineering Practice Act". No warranty of any kind is made by TxDOT for any purpose whatsoever. TxDOT assumes no responsibility for the conversion of this standard to other formats or for incorrect results or damages resulting from its use.

LEVELS DISPLAYED | ACC:

SHEET 3 OF 3

Texas Department of Transportation
Bridge Division

COMBINATION RAIL

TYPE C221

FILE: ristd018.dgn	DN: TxDOT	CK: TxDOT	DW: JTR	CK: JMH
©TxDOT April 2009	DISTRICT	FEDERAL AID PROJECT		SHEET
REVISIONS 05-11: Wall Joint Note. 07-12: Guardrail Transition.	COUNTY	CONTROL	SECT	JOB	HIGHWAY

P-201312-01

DISCLAIMER: The use of this standard is governed by the "Texas Engineering Practice Act". No warranty of any kind is made by TxDOT for any purpose whatsoever. TxDOT assumes no responsibility for the conversion of this standard to other formats or for incorrect results or damages resulting from its use.

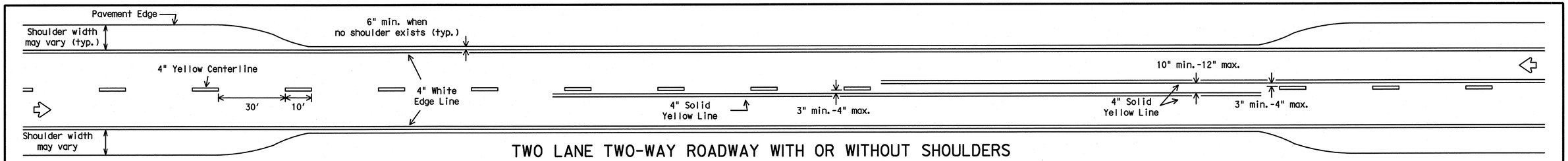

TWO LANE TWO-WAY ROADWAY WITH OR WITHOUT SHOULDERS

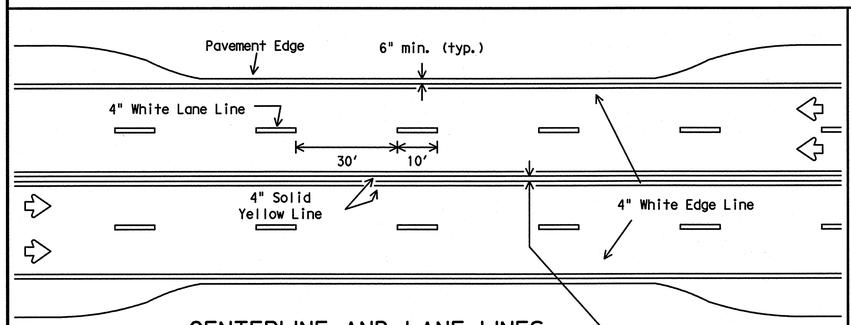

CENTERLINE AND LANE LINES FOUR LANE TWO-WAY ROADWAY WITH OR WITHOUT SHOULDERS

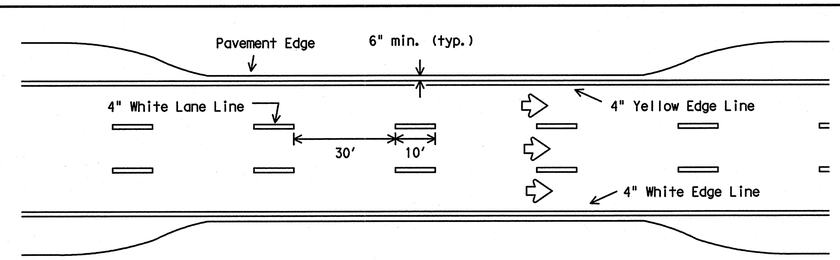

EDGE LINE AND LANE LINES ONE-WAY ROADWAY WITH OR WITHOUT SHOULDERS

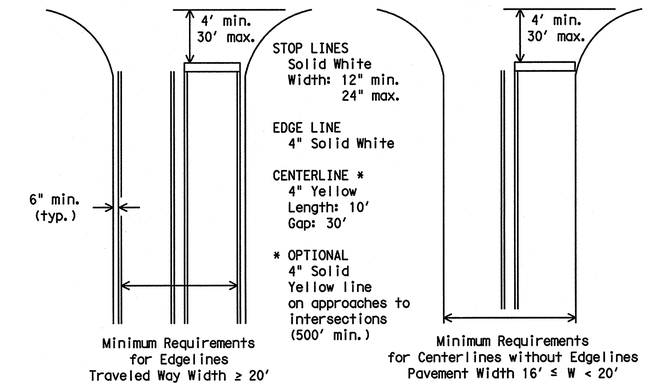

GUIDE FOR PLACEMENT OF STOP LINES, EDGE LINE & CENTERLINE

Based on Traveled Way and Pavement Widths for Undivided Highways

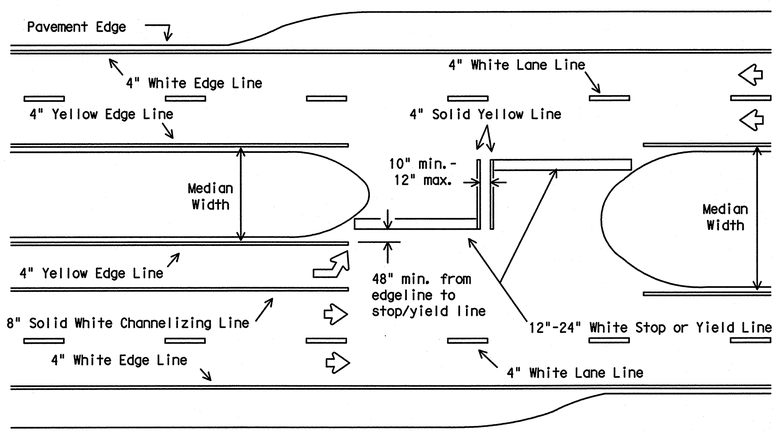

All medians shall be field measured to determine the location of necessary striping. Stop/Yield bars and centerlines shall be placed when the median width is greater than 30 ft. The median width is defined as the area between two roadways of a divided highway measured from edge of traveled way to edge of traveled way. The median excludes turn lanes. The median width might be different between intersections, interchanges and of opposite approaches of the same intersection. The narrow median width will be the controlling width to determine if markings are required.

FOUR LANE DIVIDED ROADWAY INTERSECTIONS

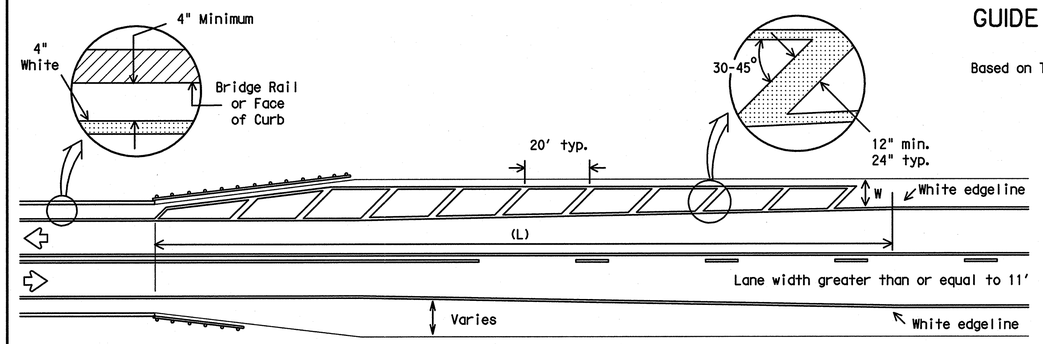

NOTES:

1. No-passing zone on bridge approach is optional but if used, it shall be a minimum 500 feet long.
2. For crosshatching length (L) see Table 1.
3. The width of the offset (W) and the required crosshatching width is the full shoulder width in advance of the bridge.
4. The crosshatching is not required if delineators or barrier reflectors are used along the structure.
5. For guard fence details, refer elsewhere in the plans.

ROADWAYS WITH REDUCED SHOULDER WIDTHS ACROSS BRIDGE OR CULVERT

TABLE 1 - TYPICAL LENGTH (L)

Posted Speed *	Formula
≤ 40	$L = \frac{WS^2}{60}$
≥ 45	L=WS

* 85th Percentile Speed may be used on roads where traffic speeds normally exceed the posted speed limit. Crosshatching length should be rounded up to nearest 5 foot increment.

L=Length of Crosshatching (FT.) W=Width of Offset (FT.)
S=Posted Speed (MPH)

EXAMPLES:

An 8 foot shoulder in advance of a bridge reduces to 4 feet on a 70 MPH roadway. The length of the crosshatching should be:

$L = 8 \times 70 = 560$ ft.

A 4 foot shoulder in advance of a bridge reduces to 2 feet on a 40 MPH roadway. The length of the crosshatching should be:

$L = 4(40)^2 / 60 = 106.67$ ft. rounded to 110 ft.

GENERAL NOTES

1. Edgeline striping shall be as shown in the plans or as directed by the Engineer. The edgeline should typically be placed a minimum of 6 inches from the edge of pavement. This distance may vary due to pavement raveling or other conditions. Edgelines are not required in curb and gutter sections of roadways.
2. The traveled way includes only that portion of the roadway used for vehicular travel and not the parking lanes, sidewalks, berms and shoulders. The traveled ways shall be measured from the inside of edgeline to inside of edgeline of a two lane roadway.

MATERIAL SPECIFICATIONS	
PAVEMENT MARKERS (REFLECTORIZED)	DMS-4200
EPOXY AND ADHESIVES	DMS-6100
BITUMINOUS ADHESIVE FOR PAVEMENT MARKERS	DMS-6130
TRAFFIC PAINT	DMS-8200
HOT APPLIED THERMOPLASTIC	DMS-8220
PERMANENT PREFABRICATED PAVEMENT MARKINGS	DMS-8240

All pavement marking materials shall meet the required Departmental Material Specifications as specified by the plans.

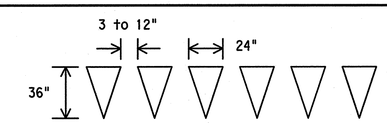

FOR POSTED SPEED ON ROAD BEING MARKED EQUAL TO OR GREATER THAN 45 MPH

FOR POSTED SPEED ON ROAD BEING MARKED EQUAL TO OR LESS THAN 40 MPH

YIELD LINES

Texas Department of Transportation
Traffic Operations Division

TYPICAL STANDARD PAVEMENT MARKINGS

PM(1)-12

©TxDOT November 1978

DN: TXDOT	CK: TXDOT	DW: TXDOT	CK: TXDOT
CONT	SECT	JOB	HIGHWAY
DIST	COUNTY		SHEET NO.

REVISIONS
8-95 2-12
5-00
8-00
3-03

22A

DATE:
FILE:

DISCLAIMER:
The use of this standard is governed by the "Texas Engineering Practice Act". No warranty of any kind is made by TxDOT for any purpose whatsoever. TxDOT assumes no responsibility for the conversion of this standard to other formats or for incorrect results or damages resulting from its use.

TYPE 1

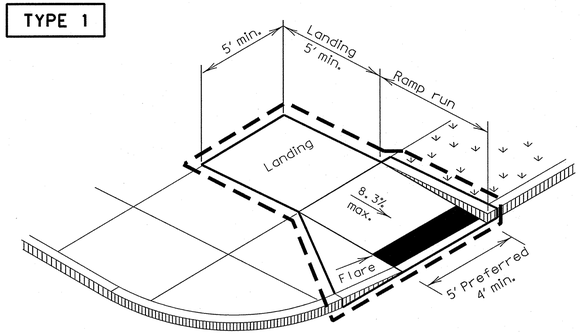

PERPENDICULAR CURB RAMP

TYPE 2

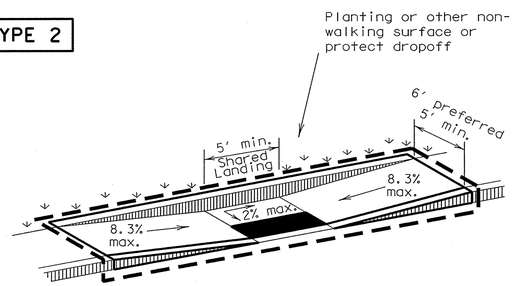

PARALLEL CURB RAMP
(Use only where water will not pond in the landing.)

TYPE 5

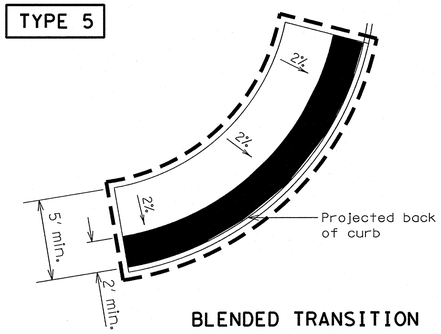

BLENDED TRANSITION

TYPE 20

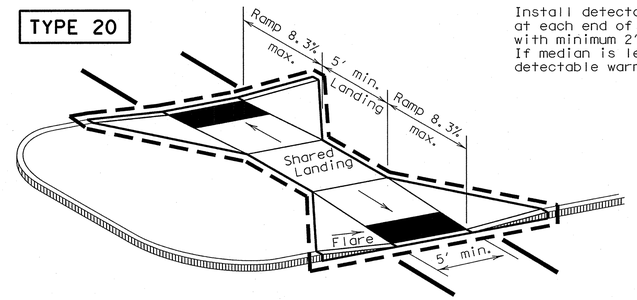

Install detectable warning surface at each end of cut-through ramp with minimum 2' smooth surface between. If median is less than 6' wide, eliminate detectable warning surfaces.

TYPE 21

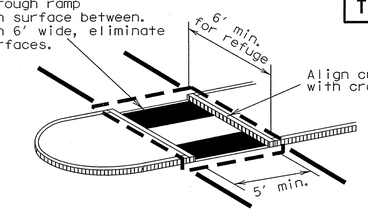

Curb details are shown elsewhere in the plans.

CURB RAMPS AT MEDIAN ISLANDS

TYPE 7

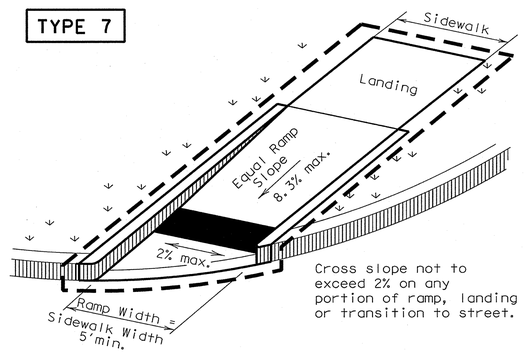

Cross slope not to exceed 2% on any portion of ramp, landing or transition to street.

(Sidewalk set back from curb)

TYPE 10

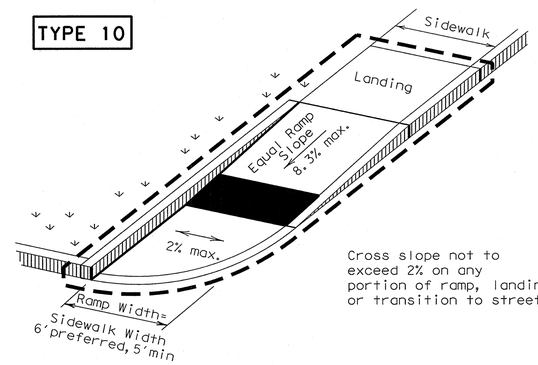

Cross slope not to exceed 2% on any portion of ramp, landing or transition to street.

(Sidewalk adjacent to curb)

DIRECTIONAL RAMPS WITHIN RADIUS

TYPE 22

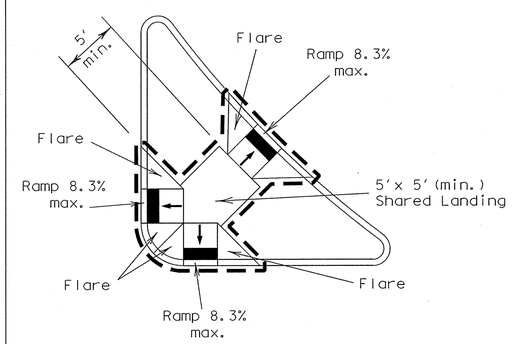

COMBINATION ISLAND RAMPS

TYPE 3

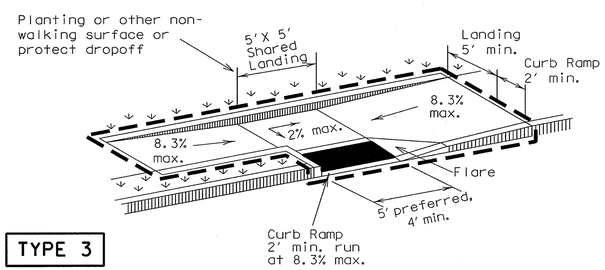

TYPE 11

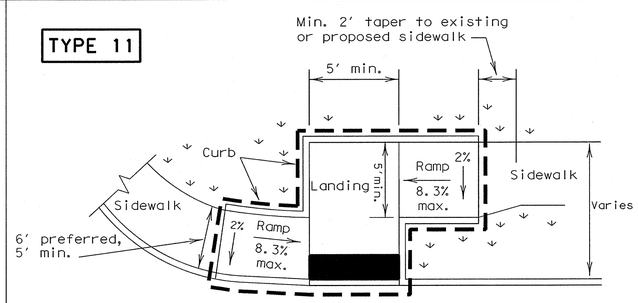

OFFSET PARALLEL CURB RAMP

TYPE 6

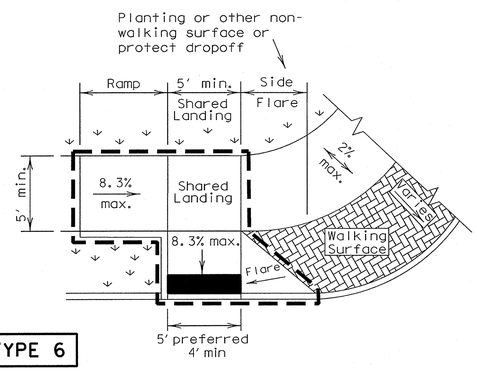

COMBINATION CURB RAMPS

NOTES / LEGEND:

See General Notes on sheet 2 of 4 for more information.

Denotes planting or non-walking surface not part of pedestrian circulation path.

Ramp Limits of Payment

Detectable Warning Surface

SHEET 1 OF 4

Texas Department of Transportation — Design Division Standard

PEDESTRIAN FACILITIES CURB RAMPS

PED-12A

FILE: ped12a.dgn	DN: TxDOT	CK: PK	DW: TxDOT	CK: HD	
© TxDOT March 2002	CONT	SECT	JOB	HIGHWAY	
REVISIONS					
VP June 13, 2012	DIST	COUNTY		SHEET NO.	

DATE:
FILE:

P-201312-01

DISCLAIMER:
The use of this standard is governed by the "Texas Engineering Practice Act". No warranty of any kind is made by TxDOT for any purpose whatsoever. TxDOT assumes no responsibility for the conversion of this standard to other formats or for incorrect results or damages resulting from its use.

DATE:
FILE:

General Notes

Curb Ramps

1. Install a curb ramp or blended transition at each pedestrian street crossing.
2. All slopes shown are maximum allowable. Lesser slopes that will still drain properly should be used. Adjust curb ramp length or grade of approach sidewalks as directed.
3. The minimum sidewalk width is 5′. Where the sidewalk is adjacent to the back of curb, a 6′ sidewalk width is desirable. Where a 5′ sidewalk cannot be provided due to site constraints, sidewalk width may be reduced to 4′ for short distances. 5′x 5′ passing areas at intervals not to exceed 200′ are required.
4. Landings shall be 5′x 5′ minimum with a maximum 2% slope in any direction.
5. Maneuvering space at the bottom of curb ramps shall be a minimum of 4′x 4′ wholly contained within the crosswalk and wholly outside the parallel vehicular travel path.
6. Maximum allowable cross slope on sidewalk and curb ramp surfaces is 2%.
7. Provide flared sides where the pedestrian circulation path crosses the curb ramp. Flared sides shall be sloped at 10% maximum, measured parallel to the curb. Returned curbs may be used only where pedestrians would not normally walk across the ramp, either because the adjacent surface is planted, substantially obstructed, or otherwise protected.
8. Additional information on curb ramp location, design, light reflective value and texture may be found in the current edition of the Texas Accessibility Standards (TAS) and 16 TAC 68.102.
9. To serve as a pedestrian refuge area, the median should be a minimum of 6′ wide, measured from back of curbs. Medians should be designed to provide accessible passage over or through them.
10. Small channelization islands, which do not provide a minimum 5′x 5′ landing at the top of curb ramps, shall be cut through level with the surface of the street.
11. Crosswalk dimensions, crosswalk markings and stop bar locations shall be as shown elsewhere in the plans. At intersections where crosswalk markings are not required, curb ramps shall align with theoretical crosswalks unless otherwise directed.
12. Handrails are not required on curb ramps. Provide curb ramps wherever on accessible route crosses (penetrates) a curb.
13. Curb ramps and landings shall be constructed and paid for in accordance with Item 531 "Sidewalks".
14. Place concrete at a minimum depth of 5" for ramps, flares and landings, unless otherwise directed.
15. Provide a smooth transition where the curb ramps connect to the street.
16. Curbs shown on sheet 1 within the limits of payment are considered part of the curb ramp for payment, whether it is concrete curb, gutter, or combined curb and gutter.
17. Existing features that comply with TAS may remain in place unless otherwise shown on the plans.

Detectable Warning Material

18. Curb ramps must contain a detectable warning surface that consists of raised truncated domes complying with Section 705 of the TAS. The surface must contrast visually with adjoining surfaces, including side flares. Furnish and install an approved cast-in-place dark brown or dark red detectable warning surface material adjacent to uncolored concrete, unless specified elsewhere in the plans.
19. Detectable Warning Materials must meet TxDOT Departmental Materials Specification DMS 4350 and be listed on the Material Producer List. Install products in accordance with manufacturer's specifications.
20. Detectable warning surfaces must be slip resistant and not allow water to accumulate.
21. Detectable warning surfaces shall be a minimum of 24" in depth in the direction of pedestrian travel, and extend the full width of the curb ramp or landing where the pedestrian access route enters the street.
22. Detectable warning surfaces shall be located so that the edge nearest the curb line is at the back of curb. Align the rows of domes to be perpendicular to the grade break between the ramp run and the street. Detectable warning surfaces may be curved along the corner radius.
23. Shaded areas on Sheet 1 of 4 indicate the approximate location for the detectable warning surface for each curb ramp type.

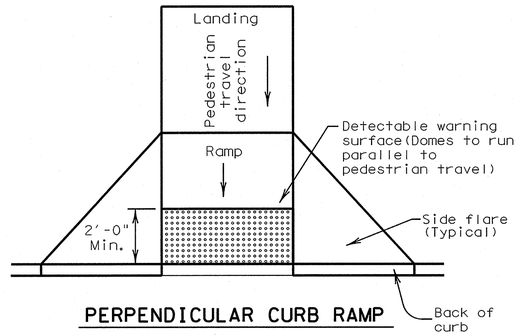

PERPENDICULAR CURB RAMP

Typical placement of detectable warning surface on sloping ramp run.

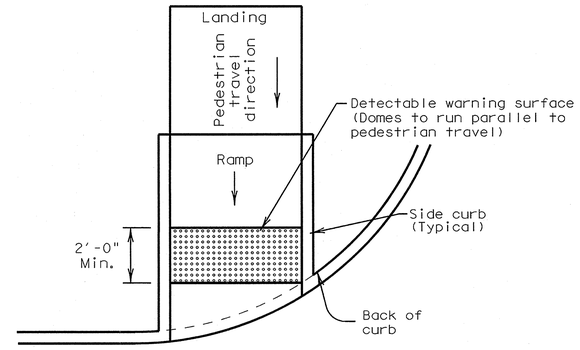

DIRECTIONAL CURB RAMP

Typical placement of detectable warning surface on sloping ramp run.

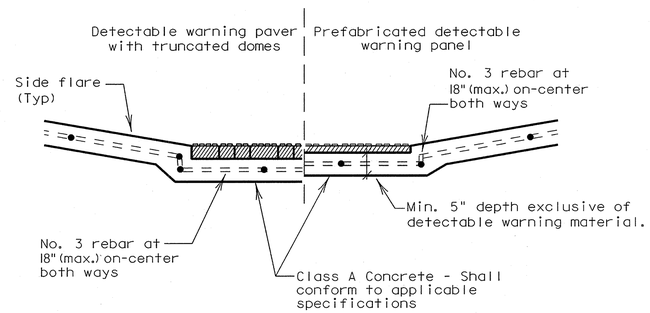

SECTION: CURB RAMP AT DETECTABLE WARNING

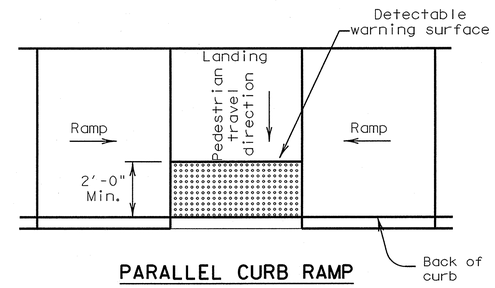

PARALLEL CURB RAMP

Typical placement of detectable warning surface on landing at street edge.

DETECTABLE WARNINGS

Detectable Warning Pavers

24. Furnish detectable warning paver units meeting all requirements of ASTM C-936, C-33. Lay in a two by two unit basket weave pattern or as directed.
25. Lay full-size units first followed by closure units consisting of at least 25 percent of a full unit. Cut detectable warning paver units using a power saw.

Sidewalks

26. Provide clear ground space at operable parts, including pedestrian push buttons. Operable parts shall be placed within one or more reach ranges specified in TAS 308.
27. Place traffic signal or illumination poles, ground boxes, controller boxes, signs, drainage facilities and other items so as not to obstruct the pedestrian access route or clear ground space.
28. Street grades and cross slopes shall be as shown elsewhere in the plans.
29. Changes in level greater than 1/4 inch are not permitted.
30. The least possible grade should be used to maximize accessibility. The running slope of sidewalks and crosswalks within the public right of way may follow the grade of the parallel roadway. Where a continuous grade greater than 5% must be provided, handrails may be desirable to improve accessibility. Handrails may also be needed to protect pedestrians from potentially hazardous conditions. If provided, handrails shall comply with TAS 505.
31. Handrail extensions shall not protrude into the usable landing area or into intersecting pedestrian routes.
32. Driveways and turnouts shall be constructed and paid for in accordance with Item "Intersections, Driveways and Turnouts". Sidewalks shall be constructed and paid for in accordance with Item, "Sidewalks".
33. Sidewalk details are shown elsewhere in the plans.

Texas Department of Transportation — Design Division Standard

PEDESTRIAN FACILITIES CURB RAMPS

PED-12A

FILE: ped12a.dgn	DN: TxDOT	CK: PK	DW: TxDOT	CK: HD	
© TxDOT March 2002	CONT	SECT	JOB	HIGHWAY	
REVISIONS					
VP June 13, 2012	DIST	COUNTY		SHEET NO.	