ENGINEERING PLANS

THE CARTER RANCH - PHASE VB

CITY OF CELINA, COLLIN COUNTY, TEXAS

CITY OF CELINA, TEXAS
APPROVED FOR CONSTRUCTION
DATE 11/6/13 BY

DEVELOPER:

19 FM LTD.

1221 NORTH INTERSTATE 35, SUITE 200
CARROLLTON, TEXAS 75006
PHONE (469) 892-7200 FAX (469) 892-7201

CELINA
EST. 1876

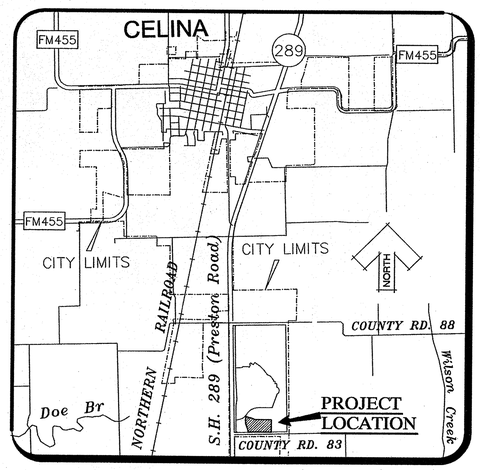

VICINITY MAP
(Not To Scale)

SHEET LIST

SHEET NO.	DESCRIPTION
1	COVER SHEET
2	GENERAL NOTES
3	CONSTRUCTION PLAT
4	CONSTRUCTION PLAT
5	WATER PLAN
6	SANITARY SEWER PLAN
7	SANITARY SEWER PROFILES : LINES S-1 & S-2
8	DRAINAGE MAP
9	STORM SEWER CALCULATIONS
10	STORM SEWER PLAN & PROFILES : LINE D-1, LAT. D-1.1 & LAT. D-1.2
11	STORM SEWER PLAN & PROFILES : LINE D-2 & LAT. D-2.1 , LINE D-6 & LAT. D-6.1
12	STORM SEWER PLAN & PROFILE : LINE D-3, LAT. D-3.1 & LAT. D-3.2
13	STORM SEWER PLAN & PROFILE : LINE D-4 & LINE D-5
14	DETENTION CALCULATIONS
15	PAVING PLAN & PROFILE : LIPIZZAN LANE STA: 10+00.00 - STA: 14+72.71
16	PAVING PLAN & PROFILE : LIPIZZAN LANE STA: 0+85.67 - STA: 10+00.00
17	PAVING PLAN & PROFILE : WINCHESTER DRIVE STA: 0+85.87 - STA: 9+54.18
18	STREET LIGHT PLAN
19	GRADING PLAN
20	GRADING PLAN
21	GRADING PLAN
22	GRADING PLAN
23	EROSION CONTROL PLAN
24	EROSION CONTROL DETAILS
25	WATER DETAILS
26	WATER DETAILS
27	SANITARY SEWER DETAILS
28	SANITARY SEWER DETAILS
29	STORM SEWER DETAILS
30	STORM SEWER DETAILS
31	PAVING DETAILS
	RETAINING WALL PLANS
SP1	SITE PLAN - RETAINING WALLS
SP2	SITE PLAN - RETAINING WALLS
SP3	SITE PLAN - RETAINING WALLS
SP4	SITE PLAN - RETAINING WALLS
SP5	SITE PLAN - RETAINING WALLS
SP6	SITE PLAN - RETAINING WALLS
RW1	MASONARY RETAINING WALLS - NOTES & STANDARD DETAILS
RW2	MASONARY RETAINING WALLS
RW3	MASONARY RETAINING WALLS
RW4	MASONARY RETAINING WALLS

USA PROFESSIONAL SERVICES GROUP, INC.
CIVIL ENGINEERS–SURVEYORS–PLANNERS–LANDSCAPE ARCHITECTS
TEXAS BOARD OF PROFESSIONAL ENGINEERS REGISTERED NO. F-1845
1525 VICEROY DRIVE, DALLAS, TEXAS 75235
OFFICE: (214) 634-3300 FAX: (214) 634-3338
WWW.USAENGINEERS.COM

SEPTEMBER 2013

RECORD DRAWING
ALL INFORMATION SHOWN ON THESE PLANS WAS FURNISHED BY THE CONTRACTOR ALL RESPONSIBILITY FOR THE ACCURACY BELONGS TO THE CONTRACTOR.
James Gardella
USA PROFESSIONAL SERVICES GROUP, INC.
DATE: June 16, 2014

STATE OF TEXAS
JAMES SCOTT YOUNG
69031
REGISTERED PROFESSIONAL ENGINEER

James Scott Young 9/18/13

USA JOB NO. 2009016.04

2009016.04 - THE CARTER RANCH - PHASE VB - ENGINEERING PLANS

P:\Sdskengn\2009016.04\Dwg\2009016_04-cv.dwg, Layout1, 9/10/2013 8:59:37 AM, Duc Tran

City of Celina Notes

GENERAL

1. All construction shall be in accordance with the latest revision of the North Central Texas Council of Governments "Standard Specifications for Public Works Construction" including the Standard Drawings therein and the City of Celina's addendum thereto. Contractor shall have at least one set of approved Engineering Plans and Specifications on-site at all times.

2. Before beginning construction, the contractor shall prepare a construction sequence schedule. The construction schedule shall be such that there is minimum interference with traffic along or adjacent to the project.

3. Construction may not begin earlier than 7:00 A.M. on weekdays nor continue after dark without permission from the City of Celina. Construction on holidays and Saturday must be approved two days in advance. A fee of $300.00 a day for working on holidays and Saturday will be accessed payable to the city before work is performed. Work may not begin before 8:00 A.M. on holidays and Saturday and work on Sunday is prohibited without special permission and payment of fees.

4. Utilities shown on the plans were taken from field surveys and information provided by the utility companies. The completeness and the accuracy of this data is not guaranteed.

The contractor is responsible for verifying the location of all underground utilities and structures and protecting them from damage during construction.

It will be the responsibility of each contractor to protect all existing public and private utilities throughout the construction of this project. Contractor shall contact the appropriate utility companies for line location prior to commencement of construction and shall assume full liability to those companies for any damages caused to their facilities.

DIG TESS 800-DIG-TESS
GCEC-TELECOM 903-482-7274
GCEC-ELECTRIC 903-821-3007
AT&T 972-569-3013
ATMOS ENERGY 972-881-4161
ATMOS ENERGY 214-341-9900
CROSSTEX ENERGY 817-570-6753
ONEOK 903-257-6594
COSERV-ELEC 940-321-7800
COSERV-GAS 940-321-7800
CITY OF CELINA 972-382-2682
TOWN OF PROSPER 972-347-9969
MARILEE SUD 972-382-3222
GRANDE 972-410-0583
SUDDEN LINK 469-853-0486

5. Work may not be backfilled or covered until the City has inspected it.

6. Material testing shall be performed by an independent testing laboratory and paid for by the Contractor. The following material tests shall be provided by the Contractor:

a. Embankment - One soil density test shall be performed at each location for each 500 C.Y. of backfill placed.
b. Pavement Sub grade - One gradation test (where lime stabilized) and one soil density test shall be performed for each 300 linear feet of pavement unless otherwise noted. Gradations must pass 100% through a 1 ¾" sieve and 60% through a #4 sieve.
c. Utility Trench Backfill - One soil density test shall be performed at 300 feet intervals or as directed by the Inspector.
d. Concrete Tests:
(1). Compressive Strength - Four test cylinders shall be taken from a representative portion of the concrete being placed for every 150-cubic yards of concrete pavement placed, but in no case shall less than 2 sets of cylinders be taken from any one day's placement.)
(2). Air, slump, and temperature tests shall be taken for every set of cylinders made. Concrete with a temperature above 95° F will be rejected.
(3). Additional cylinders and/or tests may be required at the Inspector's discretion.

The City shall select the location and depth of each soil density test unless otherwise directed.

7. All excavation on the project is unclassified.

8. Temporary erosion control shall be used to minimize the spread of silt and mud from the project on to existing streets, alleys, drainage ways and public and private property. Temporary erosion controls may include silt fences, rock check dams, stabilized construction entrances, straw bales, berms, dikes, swales, strips of undisturbed vegetation, check dams and other methods as required by the City Manager or his representative and shall conform to the Storm Water Quality Best Management Practices for Construction Activities as published by the North Central Texas Council of Governments and the City of Celina Erosion and Sediment Control Manual.

9. Finished slopes on public rights-of-way and easements shall not be steeper than 4:1. All slopes steeper than 6:1 shall be covered with erosion control matting and are hydro mulched and maintained by the contractor until grass covers all parts of the slope.

10. The contractor shall maintain two-way traffic at all times along the project.

11. Remove, salvage and replace all street and traffic control signs, which may be damaged by the construction of the project.

12. All trenching and excavation shall be performed in accordance with OSHA standards. Trench safety design will be the responsibility of the Contractor. Contractor shall submit a trench safety design approved by a professional engineer to the City for review prior to the start of any underground utility construction.

PAVING

1. All embankments shall be compacted to 95% Standard Proctor density.

2. All streets and alleys shall be placed on lime stabilized sub grade with a lime content of not less than 7%. or as approved by city engineer.

3. The minimum 28 day compressive strength of concrete street paving shall not be less than 3600 psi and shall be air entrained. Water may not be applied to the surface of concrete paving to improve workability.

4. All curb and gutter shall be integral with the pavement.

5. Parabolic crowns are required on all street pavements except on major thoroughfares where straight sections are required.

6. Streets and alleys shall be constructed with provisions for sidewalk ramps at all intersections.

DRAINAGE

1. Storm sewer pipe shall be reinforced concrete, Class III unless otherwise noted.

2. All structural concrete shall be Class "C" (3600 psi compressive strength at 28 days), air entrained.

3. The contractor shall install plugs in storm sewer lines or otherwise prevent mud from entering the storm sewer system during construction

WATER AND SANITARY SEWER

1. Water mains shall be AWWA C-900 or 905 PVC Class 200 unless otherwise noted. Minimum cover for waterlines is 48" below top of curb, 60" where no curbed street is present or as required to clear existing utilities, whichever is greater. Class B+ embedment unless otherwise noted.

2. All utility trench backfill shall be performed in 12" loose lifts and mechanically compacted with approved vibratory methods.

3. Marking tape shall be installed one foot above and over PVC water lines.

4. Fittings for PVC water lines shall be ductile iron and be encased in a polyethylene sheath.

5. All Mechanical Joints will be restrained. (Mega-Lug etc.)

6. Valves, including tapping valves shall be resilient seat gate valves, unless noted otherwise.

7. All direct burial valves shall be provided with cast iron valve boxes with PVC stacks. Valve stacks shall be vertical and concentric with the valve stem. Stainless steel valve extensions are required on all valves where the operating nut is greater than 4 feet below finished grade.

8. Fire hydrants shall be Waterous or equal as directed or approved by the City of Celina on a case by case basis and field painted silver with bonnet and caps color-coded to pipe size.
a. Six inch line- silver body with RED bonnet and caps.
b. Eight inch line- silver body with BLUE bonnet and caps.
c. Ten inch line- silver body with GREEN bonnet and caps.
d. Twelve inch and larger- silver body with YELLOW bonnet and caps.

9. All exposed bolting on any buried equipment or material shall be stainless steel. Included are:
a. Bonnet and stuffing box bolts on valves.
b. Shoe bolts on fire hydrants.
c. Flange bolts.
d. "Cor-ten" mechanical joint "T" bolts are acceptable for direct burial service.

10. Meter boxes shall approved by the City of Celina.

10. Sanitary sewer mains shall be DR 35 PVC. Class H embedment unless otherwise noted.
a. The contractor shall install and maintain watertight plugs in all connections to the City's sanitary sewer system until the City accepts the project.
b. All sanitary sewer lines and manholes shall be leak tested before the project is accepted. Deflection testing of PVC sewer lines is required. Deflection shall be tested with a mandrel for 5% deflection.
c. All sewer lines shall be video inspected with a copy of the video and station report submitted to the Inspector.
d. Mandrel, Air Test, and Video inspection shall not be performed until all utilities are complete, in place, and backfilled.

RECORD DRAWING

ALL INFORMATION SHOWN ON THESE PLANS WAS FURNISHED BY THE CONTRACTOR ALL RESPONSIBILITY FOR THE ACCURACY BELONGS TO THE CONTRACTOR.

James Gardella
USA PROFESSIONAL SERVICES GROUP, INC.
DATE: June 16, 2014

REV	DESCRIPTION	DATE

THE CARTER RANCH - PHASE VB
CITY OF CELINA, COLLIN COUNTY, TEXAS

GENERAL NOTES

19 FM LTD.
1221 North Interstate 35, Suite 200
Carrollton, Texas 75006
Phone (469) 892-7200 Fax (469) 892-7201

STATE OF TEXAS
JAMES SCOTT YOUNG
69031
REGISTERED PROFESSIONAL ENGINEER
9/10/13

USA PROFESSIONAL SERVICES GROUP, INC.
TEXAS BOARD OF PROFESSIONAL ENGINEERS
REGISTERED ENGINEERING FIRM F-1845
CIVIL ENGINEERS • SURVEYORS
PLANNERS • LANDSCAPE ARCHITECTS
1525 VICEROY DRIVE
DALLAS, TEXAS 75235
(214) 634-3300 FAX (214) 634-3338

DATE: SEPTEMBER 2013
SCALE: N/A
SHEET: 2 OF 31
PROJECT NO. 2009016.04

P:\Sdskengin\2009016.04\Dwg\2009016_04cgn.dwg, 9/10/2013 8:06:53 AM, Duc Tran

GRAPHIC SCALE

100 0 50 100 200 400

(IN FEET)
1 inch = 100 ft.

Block A	
Lot	Area
2	6496 s.f.
3	6496 s.f.
4	6496 s.f.
5	6496 s.f.
6	6496 s.f.
7	6496 s.f.
8	6496 s.f.
9	6496 s.f.
10	6496 s.f.
11	6496 s.f.
12	6496 s.f.
13	6982 s.f.
14	7458 s.f.
15	8454 s.f.
16	10152 s.f.
17	7231 s.f.
18	7231 s.f.
19	9805 s.f.
20	9085 s.f.
21	8394 s.f.
22	7939 s.f.
23	7637 s.f.
24	7341 s.f.
25	9675 s.f.

Block D	
Lot	Area
1	9751 s.f.
2	9384 s.f.
3	7817 s.f.
4	7817 s.f.
5	7817 s.f.
6	7514 s.f.
7	6552 s.f.
8	6552 s.f.
9	6552 s.f.
10	6552 s.f.
11	6552 s.f.
12	6552 s.f.
13	6552 s.f.
14	6552 s.f.
15	6552 s.f.
16	6552 s.f.
17	6552 s.f.
20	6552 s.f.
21	6552 s.f.
22	6552 s.f.

Block D	
Lot	Area
23	6552 s.f.
24	6552 s.f.
25	6552 s.f.
26	6552 s.f.
27	6552 s.f.
28	6552 s.f.
29	6552 s.f.
30	6552 s.f.
31	7114 s.f.
32	7292 s.f.
33	7292 s.f.
34	7292 s.f.
35	7292 s.f.
36	7292 s.f.
37	7292 s.f.
38	9784 s.f.
39	7292 s.f.
40	7961 s.f.

Block E	
Lot	Area
15	7000 s.f.
16	7000 s.f.
17	7000 s.f.
18	7000 s.f.
19	7000 s.f.
20	7000 s.f.
21	7000 s.f.
22	7000 s.f.
23	7000 s.f.
24	7000 s.f.
25	7000 s.f.
26	7544 s.f.

HOA		
Lot	Blk	Area
2X	E	6423 s.f.
3X	A	63882 s.f.

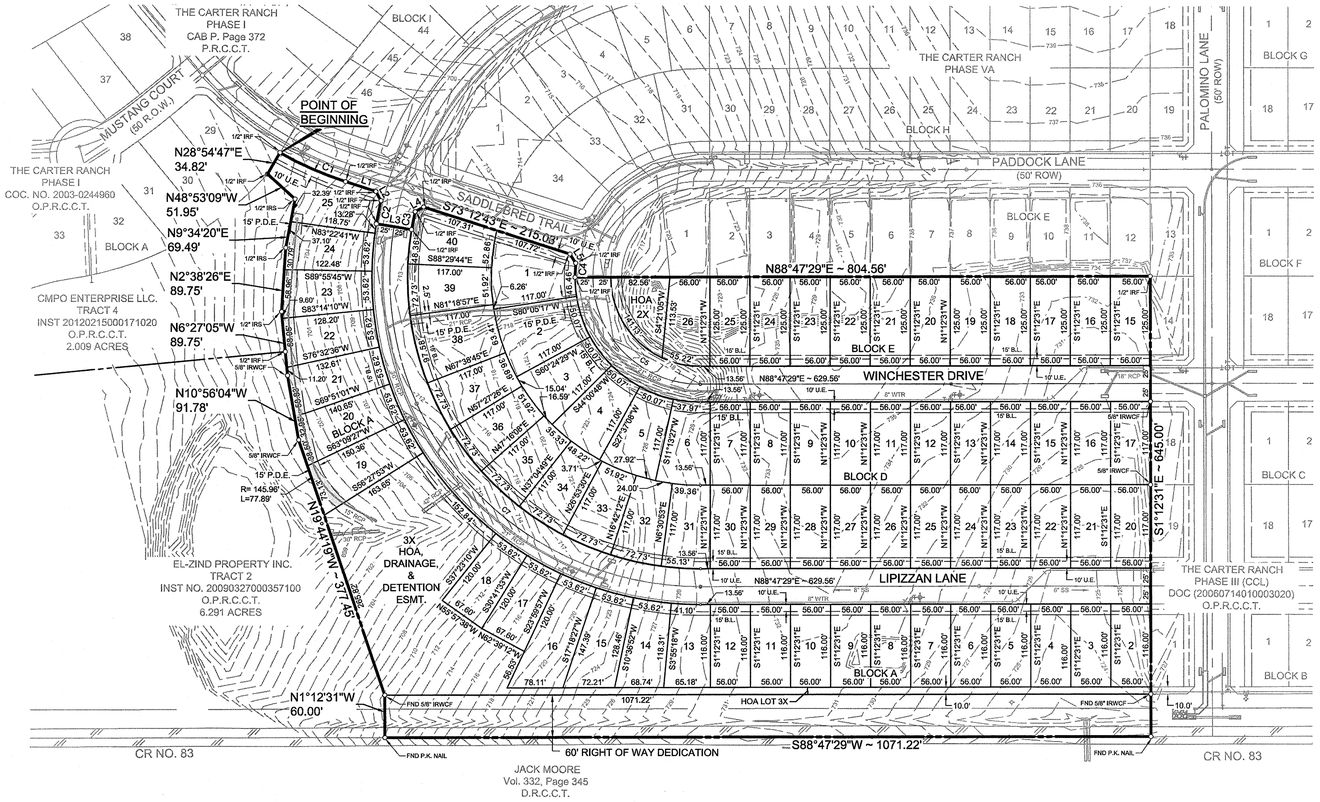

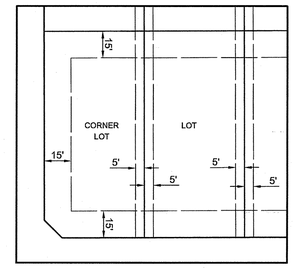

TYPICAL SETBACK LINES
NOT TO SCALE

Note: Refer to Development Plan for Landscaping and Masonry Requirements for Lot 3x, Block A.

Line Table		
Line #	Length	Direction
L1	44.68'	S73°12'43"E
L2	14.60'	S30°05'06"E
L3	50.00'	S81°43'14"E
L4	13.61'	N59°41'09"E
L5	15.30'	S33°08'14"E

Curve Table					
Curve #	Delta	Radius	Length	Chord Bearing	Chord Distance
C1	12°07'28"	475.01'	100.52'	S67°08'58"E	100.33'
C2	4°08'17"	459.00'	33.15'	S10°20'55"W	33.14'
C3	3°36'12"	409.00'	25.72'	N10°04'52"E	25.72'
C4	6°30'33"	175.00'	19.88'	S2°02'45"W	19.87'
C5	90°00'00"	150.00'	235.62'	S46°12'31"E	212.13'
C7	99°29'17"	434.00'	753.60'	S41°27'52"E	662.43'

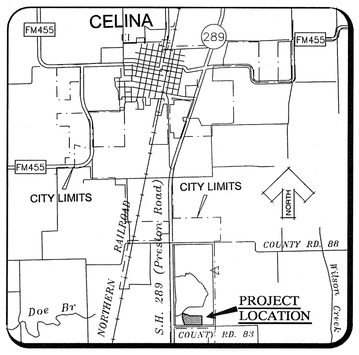

VICINITY MAP
(Not To Scale)

PLAT NOTES

1. All open space / common area lots are to be dedicated to the HOA and the HOA will be responsible for the maintenance and upkeep of said lots.

2. Sidewalks must be installed by the Developer along all open space and common area lots

3. The City of Celina will not exclude other utilities from dedicated water & sewer easements but reserves the right to assign the locations of other utilities in available portions of said easements. Franchise utilities shall be placed just inside the outside edge of the right-of-way (outside of sidewalk).

4. A fence may be constructed along lot lines within a surface drainage easement provided the fence does not obstruct surface drainage.

5. All lot corners and boundary corners will be set upon completion of construction with 1/2" inch x 18"inch iron rods with red plastic caps stamped "USA INC." The centerline of the street right-of-way will be monumented with a scribed "x" in concrete at the p.c's, p.t.'s and intersection points.

6. All water, sanitary sewer and drainage easements to be dedicated to the City of Celina and maintained by the HOA.

7. Except as shown, no portion of the property is located in the 100 year floodplain as shown on The Flood Insurance Rate Map for Collin County, Texas. Map No. 48085C0120J, revised June 2, 2009.

8. The HOA will be responsible for the maintenance of the private storm line across lots 3x and lots 19, 20, 21, 22, 23, 24, and 25 in Block A.

This plat is hereby adopted by the HOA and approved by the City of Celina ("City") subject to the following conditions which shall be binding upon the HOA, their heirs, grantees, successors and assigns. The Portion of Block A, Lot 3X, as shown on this plat is called a "Drainage and Detention Easement". The Drainage and Detention Easement within the limits of this addition, will remain accessible at all times and will be maintained in a safe and sanitary condition by the HOA of the lots or lots that are traversed by or adjacent to the Drainage and Detention Easement.

The City will not be responsible for the maintenance and operation of said easement or for any damage to private property or person that results from conditions in the Drainage and Detention Easement, or for the control of erosion. No construction of any type of building, fence or any other structure within the Drainage and Detention Easement, as herein above defined shall be permitted, unless approved by the City Engineer. Provided, however, it is understood that in the event it becomes necessary for the City to erect or consider erecting any type of drainage structure in order to improve the storm drainage that may be occasioned by drainage in or adjacent to the subdivision, then in such event, the City shall have the right to enter upon the Drainage and Detention Easement at any point, or points, to investigate, survey, or to erect, construct and maintain any drainage facility deemed necessary for drainage purposes. Each property owner shall keep the Drainage and Detention Easement clean and free of debris, silt, and any substance which would result in unsanitary conditions or obstruct the flow of water, and the City shall have the right of ingress and egress for the purpose of inspection and supervision of maintenance work by the property owner to alleviate any undesirable conditions which may occur. The natural drainage through the Drainage and Detention Easement is subject to storm water overflow and natural bank erosion to an extent which cannot be definitely defined. The City shall not be liable for any damages of any nature resulting from the failure of any structure or structures, within the Drainage and Detention Easement.

RECORD DRAWING

ALL INFORMATION SHOWN ON THESE PLANS WAS FURNISHED BY THE CONTRACTOR ALL RESPONSIBILITY FOR THE ACCURACY BELONGS TO THE CONTRACTOR.

James Gardella
USA PROFESSIONAL SERVICES GROUP, INC.
DATE: June 16, 2014

LEGEND	
SYMBOL	DESCRIPTION
S.F.	Lot Area (Square Feet)
U.E.	Utility Easement (By This Plat)
W.E.	Waterline Easement (By This Plat)
S.E.	Sanitary Sewer Easement (By This Plat)
P.D.E.	Public Drainage Easement (By This Plat)
B.L.	Minimum Building Setback Line
Min. F.F.	Minimum Finish Floor
IRS	Iron Rod Set
IRF	Iron Rod Found
IRWCF	Iron Rod With Cap Found
SET "x"	"x" Cut In Concrete Pavement
FND "x"	"x" Found In Concrete Pavement
D.R.C.C.T.	Deed Records, Collin County, Texas
P.R.C.C.T.	Plat Records, Collin County, Texas
H.O.A.	Homeowners Association

AREA TABLE	
Street Right-of-Way	176,690 S.F. / 4.06 Acres
Lots	533,533 S.F. / 12.25 Acres
HOA Lots	70,305 S.F. / 1.61 Acres
Gross Area	780,528 S.F. / 17.92 Acres

Developer/Owner:
19 FM LTD.
1221 NORTH INTERSTATE 35, SUITE 200
CARROLLTON, TEXAS 75006
Phone (469)892-7200 Fax (469)892-7201

CONSTRUCTION PLAT

THE CARTER RANCH - PHASE VB
74 RESIDENTIAL LOTS
2 HOA LOTS
17.918 ACRES
SITUATED IN THE
JOHN CAHILL SURVEY TRACT 3, ABSTRACT No. 171
CITY OF CELINA, COLLIN COUNTY, TEXAS

USA PROFESSIONAL SERVICES GROUP, INC.
TEXAS BOARD OF PROFESSIONAL ENGINEERS REGISTERED ENGINEERING FIRM F-1845
*CIVIL ENGINEERS - SURVEYORS - PLANNERS*LANDSCAPE ARCHITECTS
1525 VICEROY DRIVE
DALLAS, TEXAS 75235
(214) 634-3300 FAX (214) 634-3338

SEPTEMBER 2013 2009016.04
SHEET 1 OF 2

CITY CASE NO. _____

Recording Information: Cabinet_____ Page_____

P:\Sdksurv\2009016.04\dwg\Plats\ 2009016_04-CP Ph.5B.dwg, 9/10/2013 9:12:18 AM, Doc Tran

STATE OF TEXAS
COUNTY OF COLLIN

OWNER'S DEDICATION

WHEREAS 19 FM LTD, is the owner of a tract of land situated in the John Cahill Survey, Abstract No. 171, City of Celina, Collin County, Texas and being a part of Tract 1 as described in a deed to **19 FM, Ltd.**, as recorded in Document No. 20070606000766060 of the Official Public Records, Collin County, Texas and being more particularly described as follows:

BEGINNING at a 1/2 inch iron rod with cap stamped "USA INC" found for corner (hereinafter called 1/2 inch iron rod found), said rod being the most Easterly corner of lot 29, Block A, of Carter Ranch Phase 1 as recorded in Document No. 2003-0244960 of the Official Public Records, Collin County, Texas and being on the most Southwesterly Right of Way of Saddlebred Trail (a 50 foot Right-of-Way) and the beginning of a curve to the left having a radius of 475.01 feet, a central angle of 12 degrees 07 minutes 28 seconds a chord which bears South 67 degrees 08 minutes 58 seconds East and a chord distance of 100.33 feet.

THENCE along said curve an arc distance of 100.52 feet to a 1/2 inch iron rod found for corner.

THENCE South 73 degrees 12 minutes 43 seconds East, a distance of 44.68 feet to a 1/2 inch iron rod found for corner.

THENCE South 30 degrees 05 minutes 06 seconds East, a distance of 14.60 feet to a 1/2 inch iron rod found for corner and the beginning of a curve to the left having a radius of 459.00 feet, a central angle of 04 degrees 08 minutes 17 seconds, a chord which bears South 10 degrees 20 minutes 55 seconds West and a chord distance of 33.14 feet.

THENCE along said curve an arc distance of 33.15 feet to a 1/2 inch iron rod found for corner.

THENCE South 81 degrees 43 minutes 14 seconds East for a distance of 50.00 feet to a 1/2 inch iron rod found for corner and the beginning of a curve to the right having a radius of 409.00 feet, a central angle of 03 degrees 36 minutes 12 seconds, a chord which bears North 10 degrees 04 minutes 52 seconds East and a chord distance of 25.72 feet.

THENCE along said curve an arc distance of 25.72 feet to a 1/2 inch iron rod found for corner.

THENCE North 59 degrees 41 minutes 09 seconds East, a distance of 13.61 feet to a 1/2 inch iron rod found for corner.

THENCE South 73 degrees 12 minutes 43 seconds East for a distance of 215.03 feet to a 1/2 inch iron rod found for corner.

THENCE South 33 degrees 08 minutes 14 seconds East, a distance of 15.30 feet to a 1/2 inch iron rod found for corner and the beginning of a curve to the left having a radius of 175.00 feet, a central angle of 06 degrees 30 minutes 33 seconds, a chord which bears South 02 degrees 02 minutes 45 seconds West and a chord distance of 19.87 feet.

THENCE along said curve an arc distance of 19.88 feet to a 1/2 inch iron rod found for corner.

THENCE North 88 degrees 47 minutes 29 seconds East for a distance of 804.56 feet to a 1/2 inch iron rod found for corner, said rod being the Southwest corner of lot 13 Block E and Northwest corner of lot 14 Block E of Carter Ranch Phase **III** as recorded in Document No. 20060714010003020 of the Official Public Records, Collin County, Texas.

THENCE South 01 degrees 12 minutes 31 seconds East along the West line of Carter Ranch Phase **III** a distance of 645.00 feet to a pk nail in the centerline of County Road No. 83, found for corner.

THENCE South 88 degrees 47 minutes 29 seconds West along the approximate centerline of County Road No. 83 a distance of 1,071.22 feet to a pk nail found in the approximate centerline of County Road No. 83 found for Corner.

THENCE North 01 degrees 12 minutes 31 seconds West departing the approximate centerline of County Road No. 83 a distance of 60.00 feet to a 5/8 inch iron with cap stamped "Huitt Zollars" found for corner.

THENCE North 19 degrees 44 minutes 19 seconds West a distance of 377.45 feet to a 5/8 inch iron with cap stamped "Huitt Zollars" found for corner.

THENCE North 10 degrees 56 minutes 04 seconds West for a distance of 91.78 feet to a 5/8 inch iron with cap stamped "Huitt Zollars" found for corner.

THENCE North 06 degrees 27 minutes 05 seconds West passing a 1/2 inch iron rod found at 20.80 feet and continuing for a total distance of 89.75 feet to a 1/2 inch iron rod set for corner.

THENCE North 02 degrees 38 minutes 26 seconds East a distance of 89.75 feet to a 1/2 inch iron rod set for corner.

THENCE North 09 degrees 34 minutes 20 seconds East a distance of 69.49 feet to a 1/2 inch iron rod set for corner.

THENCE North 48 degrees 53 minutes 09 seconds West a distance of 51.95 feet to a 1/2 inch iron rod found for corner.

THENCE North 28 degrees 54 minutes 47 seconds East along the Southeasterly line of said lot 29 Block A for a distance of 34.82 feet to the **POINT OF BEGINNING** and containing 17.918 acres or 780,528 square feet of land more or less.

NOW, THEREFORE, KNOW ALL MEN BY THESE PRESENTS:

That **19 FM LTD**, acting herein by and through its duly authorized officer(s), does hereby adopt this plat designating the herein above described property as an addition to the City of Celina, Texas, and does hereby dedicate, in fee simple to the public use forever, the streets, rights-of-way, and other public improvements shown thereon. The streets and alleys, if any, are dedicated for street purposes. The easements and public use areas, as shown, are dedicated, for the public use forever, for the purposes indicated on this plat. No buildings, fences, trees, shrubs or other improvements or growths shall be constructed or placed upon, over or across the easements as shown, except that landscape improvements may be placed on landscape easements, if approved by the City Council of the City of Celina. In addition, utility easements may also be used for the mutual use and accommodation of all public utilities desiring to use or using the same unless the easement limits the use to particular utilities, said use by public utilities being subordinate to the public's and City of Celina's use thereof. The City of Celina and public utility entities shall have the right to remove and keep removed all or parts of any buildings, fences, trees, shrubs or other improvements or growths which may in any way endanger or interfere with the construction, maintenance, or efficiency of their respective systems in said easements. The City of Celina and public utility entities shall at all times have the full right ingress and egress to or from their respective easements for the purpose of constructing, reconstructing, inspecting, patrolling, maintaining, reading meters, and adding to or removing all or parts of their respective systems without the necessity at any time procuring permission from anyone.

This plat approved subject to all platting ordinances, rules, regulations and resolutions of the City of Celina, Texas

WITNESS, my hand, this the _____ day of _____, 2013.

By:

_____
Authorized Signature of Owner

_____
Printed Name and Title

STATE OF TEXAS
COUNTY OF _____

Before me, the undersigned authority, a Notary Public in and for the State of Texas, on this day personally appeared _____, Owner, known to me to be the person whose name is subscribed to the foregoing instrument and acknowledged to me that he executed the same for the purpose and considerations therein expressed.

Given under my hand and seal of office, this_____ day of _____, 2013.

_____
Notary Public in and for the State of Texas

_____
My Commission Expires On:

KNOW ALL MEN BY THESE PRESENTS:

THAT, I, Gary Romatz, do hereby certify that I prepared this plat from an actual and accurate survey of the land and that the corner monuments shown thereon as "set" were properly placed under my personal supervision, in accordance with the Subdivision Ordinance of the City of Celina, Texas.

_____
Gary Romatz, Registered Professional Land Surveyor

_____
Texas Registration No.

STATE OF TEXAS
COUNTY OF DENTON

Before me, the undersigned authority, a Notary Public in and for the State of Texas, on this day personally appeared **Gary Romatz**, Registered Professional Land Surveyor, known to me to be the person whose name is subscribed to the foregoing instrument and acknowledged to me that he executed the same for the purpose and considerations therein expressed.

GIVEN UNDER MY HAND AND SEAL OF OFFICE this _____ day _____, 2013.

_____
Notary Public in and for the State of Texas

_____
My Commission Expires On:

Construction Plat

Approved by the City of Celina for filing at the office of the County Clerk of Collin County, Texas

RECOMMENDED BY: Planning and Zoning Commission
City of Celina, Texas

_____ _____
Signature of Chairperson Date of Recommendation

APPROVED BY: City Council
City of Celina, Texas

_____ _____
Signature of Mayor Date of Approval

ATTEST:

_____ _____
City Secretary Date

PROPERTY LOCATION STATEMENT

This property is located in the corporate limits of the City of Celina, Collin County, Texas.

_____ _____
Signature of Mayor Date of Approval

ATTEST:

_____ _____
City Secretary Date

STANDARD NOTES

1. Selling a portion of this addition by metes and bounds is a violation of city ordinance and state law, and is subject to fine and withholding of utilities and building permits.

2. The undersigned does hereby covenant and agree that he or she or they shall construct upon the fire lane easements, as dedicated as shown hereon, a hard surface in accordance with the City of Celina's paving standards for fire lane, and that he or she or they shall maintain the same in a state of good repair at all times and keep the same free and clear of any structures, fences, trees, shrubs or other improvements or obstruction, including but not limited to the parking of motor vehicles, trailers, boats or other impediments to the accessibility of fire apparatus. The maintenance of paving on the fire lane easements
Is the responsibility of the owner, and the owner shall post and maintain appropriate signs in conspicuous places along such fire lanes, stating "Fire Lanes, No Parking". The local law enforcement agency(s) is hereby authorized to enforce parking regulations within the fire lanes, and to cause such fire lanes and utility easements to be maintained free and unobstructed at all times for Fire Department and emergency use.

3. The undersigned does hereby covenant and agree that the access easement may be utilized by any person or the general public for ingress and egress to public vehicular and pedestrian use and access, and for Fire Department and emergency use in, along, upon and across said premises, with the right and privilege at all times of the City of Celina, its agents, employees, workmen and representatives having ingress, egress, and regress in, along, upon and across said premises

4. The areas or areas shown on the plat as "VAM" (Visibility, Access and Maintenance)
Easement(s) are hereby given and granted to the city, its successors and assigns, as an easement to provide visibility, right of access for maintenance upon and across said VAM Easement. The city shall have the right but not the obligation to maintain any and all landscaping within the VAM Easement. Should the city exercise this maintenance right, then it shall be permitted to remove and dispose of any and all landscaping improvements, including without limitations any trees, shrubs, flowers, ground cover and fixtures. The city may withdraw maintenance of the VAM Easement at any time. The ultimate maintenance responsibility for the VAM Easement shall rest with the owners. No building, fence, shrub, tree or other improvements or growths, which in any way may endanger or interfere with the visibility, shall be constructed in, on, over, or across the VAM Easement. The city shall also have the right but not the obligation to add any landscape improvements to the VAM easements, to erect any traffic control devices or signs on the VAM Easement and to remove any obstruction thereon. The city, its successors, assigns, or agents shall have the right and privilege at all times to enter upon the VAM Easement or any part thereof for the purposes and with all rights and privilege set forth herein.

RECORD DRAWING

ALL INFORMATION SHOWN ON THESE PLANS WAS FURNISHED BY THE CONTRACTOR ALL RESPONSIBILITY FOR THE ACCURACY BELONGS TO THE CONTRACTOR.

James Gardella
USA PROFESSIONAL SERVICES GROUP, INC.
DATE: June 16, 2014

Developer/Owner:
19 FM LTD.
1221 NORTH INTERSTATE 35, SUITE 200
CARROLLTON, TEXAS 75006
Phone (469)892-7200 Fax (469)892-7201

CONSTRUCTION PLAT

THE CARTER RANCH - PHASE VB
74 RESIDENTIAL LOTS
2 HOA LOTS
17.918 ACRES
SITUATED IN THE
JOHN CAHILL SURVEY TRACT 3, ABSTRACT No. 171
CITY OF CELINA, COLLIN COUNTY, TEXAS

USA PROFESSIONAL SERVICES GROUP, INC.
TEXAS BOARD OF PROFESSIONAL ENGINEERS REGISTERED ENGINEERING FIRM F-1845
CIVIL ENGINEERS - SURVEYORS - PLANNERS LANDSCAPE ARCHITECTS
1525 VICEROY DRIVE
DALLAS, TEXAS 75235
(214) 634-3300 FAX (214) 634-3338

SEPTEMBER 2013 2009016.04
SHEET 2 OF 2

CITY CASE NO. _____

Recording Information: Cabinet_____ Page_____

P:\Sdskserv\2009016.04\dwg\Plats 2009016_04-CP Ph 2B.dwg, 8/10/2013 9:13:00 AM, Duc Tran

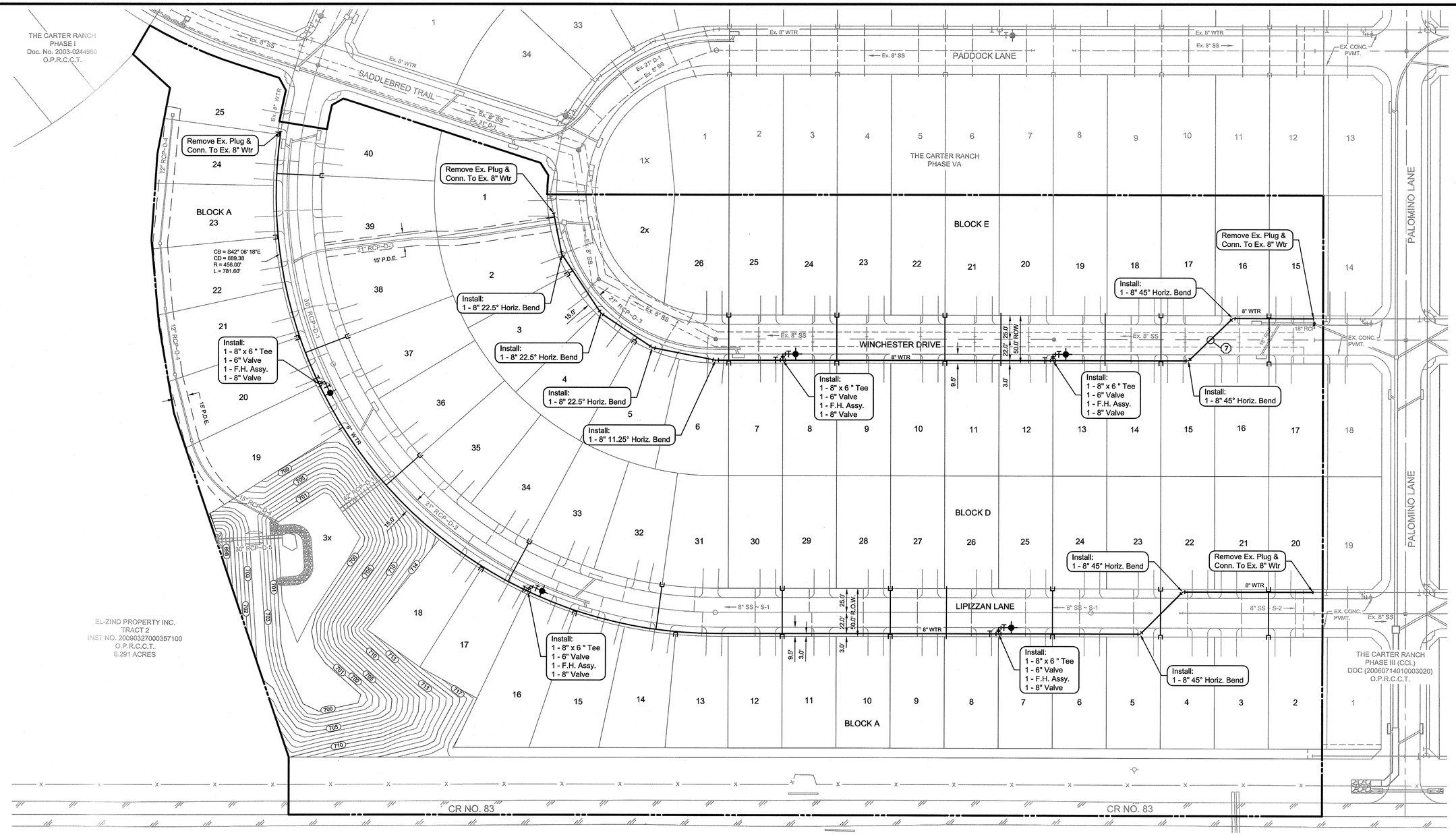

LEGEND	
SYMBOL	DESCRIPTION
	11-1/4° Horizontal Bend
	22-1/2° Horizontal Bend
	45° Horizontal Bend
T	Valve
	Tee
	Fire Hydrant
	Water Services
I	Plug
	Water Crosshairs
	Water Main
	Water Service
1	Water/Sanitary Sewer Crossing Case # (See Sheet 23 For Crossing Details)

RECORD DRAWING

ALL INFORMATION SHOWN ON THESE PLANS WAS FURNISHED BY THE CONTRACTOR ALL RESPONSIBILITY FOR THE ACCURACY BELONGS TO THE CONTRACTOR.

James Gardella
USA PROFESSIONAL SERVICES GROUP, INC.
DATE: June 16, 2014

Notes:
See Sheet 2 For General Notes
See Sheets 25 & 26 For Water Details & Sheets 27 & 28 For Sanitary Sewer & TCEQ Crossing Details

BENCHMARKS

TBM #1= Centerline of existing sanitary manhole at the centerline intersection of Appaloosa Lane and Equine Lane located in "The Carter Ranch Phase IIA". Elevation = 687.57 feet

TBM #2 = "X" Found in concrete at the centerline intersection of Equine Lane and Old Stables Drive located in "The Carter Ranch Phase IIA". Elevation =728.63 feet

CM #5 = Concrete monument with 5/8 inch iron rod with cap stamped "Huitt-Zollars" at the Southeast corner of the intersection of State Highway 289 and County Road 88, located approximately 45' feet South of the centerline of County Road 88 and 112' feet East of the centerline of State Highway 289 Elevation = 681.76 feet

GRAPHIC SCALE

50 0 25 50 100 200

(IN FEET)
1 inch = 50 ft.

P:\Sdskrngn\2009016.04\Dwg\2009016_04-wp.dwg, Layout1, 9/10/2013 9:22:36 AM, Duc Tran

REV	DESCRIPTION	DATE

THE CARTER RANCH - PHASE VB
CITY OF CELINA, COLLIN COUNTY, TEXAS

WATER PLAN

19 FM LTD.
1221 North Interstate 35, Suite 200
Carrollton, Texas 75006
Phone (469) 892-7200 Fax (469) 892-7201

STATE OF TEXAS
JAMES SCOTT YOUNG
69031
REGISTERED PROFESSIONAL ENGINEER
9/10/13

USA PROFESSIONAL SERVICES GROUP, INC.
TEXAS BOARD OF PROFESSIONAL ENGINEERS
REGISTERED ENGINEERING FIRM F-1845
CIVIL ENGINEERS • SURVEYORS
PLANNERS • LANDSCAPE ARCHITECTS
1525 VICEROY DRIVE
DALLAS, TEXAS 75235
(214) 634-3300 FAX (214) 634-3338

DATE: SEPTEMBER 2013
SCALE: 1" = 50'H
SHEET: 5 OF 31
PROJECT NO. 2009016.04

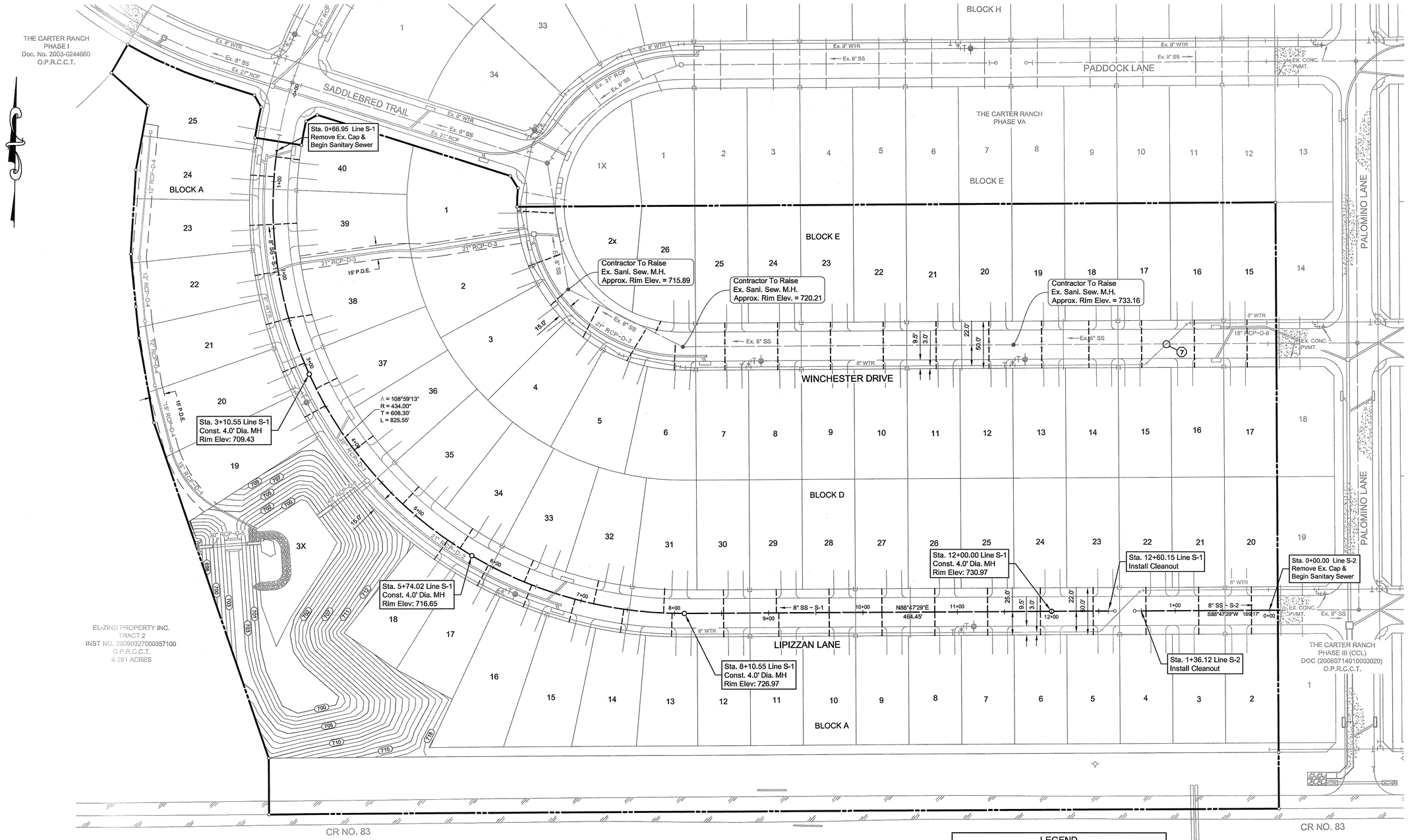

BENCHMARKS

TBM #1= Centerline of existing sanitary manhole at the centerline intersection of Appaloosa Lane and Equine Lane located in "The Carter Ranch Phase IIA". Elevation = 687.57 feet

TBM #2 = "X" Found in concrete at the centerline intersection of Equine Lane and Old Stables Drive located in "The Carter Ranch Phase IIA". Elevation =728.63 feet

CM #5 = Concrete monument with 5/8 inch iron rod with cap stamped "Huitt-Zollars" at the Southeast corner of the intersection of State Highway 289 and County Road 88, located approximately 45' feet South of the centerline of County Road 88 and 112' feet East of the centerline of State Highway 289 Elevation = 681.76 feet

GRAPHIC SCALE

50 0 25 50 100 200

(IN FEET)
1 inch = 50 ft.

Note: Deep-Cut Sewer Services
Required On Lots 15 - 23, Block E
Lots 9 - 17, Block D
(See Sheet 27 For Detail)

LEGEND

SYMBOL	DESCRIPTION
○	Sanitary Sewer Manhole
●	Ex. Sanitary Sewer Manhole
⊢○	Sanitary Sewer Cleanout
——	Sanitary Sewer Main
——	Ex. Sanitary Sewer Main
— — —	Sanitary Sewer Service
——	Ex. Sanitary Sewer Main With Service Stubout
— —	SS Service Connect to Ex. Stubout
○—①	Water/Sanitary Sewer Crossing Case # (See Sheet 28 For Crossing Details)

RECORD DRAWING

ALL INFORMATION SHOWN ON THESE PLANS WAS FURNISHED BY THE CONTRACTOR ALL RESPONSIBILITY FOR THE ACCURACY BELONGS TO THE CONTRACTOR.

James Gardella
USA PROFESSIONAL SERVICES GROUP, INC.
DATE: June 16, 2014

Notes:
See Sheet 2 For General Notes
See Sheets 25 & 26 For Water Details &
Sheets 27 & 28 For Sanitary Sewer &
TCEQ Crossing Details

REV	DESCRIPTION	DATE

THE CARTER RANCH - PHASE VB
CITY OF CELINA, COLLIN COUNTY, TEXAS
SANITARY SEWER PLAN

19 FM LTD.
1221 North Interstate 35, Suite 200
Carrollton, Texas 75006
Phone (469) 892-7200 Fax (469) 892-7201

STATE OF TEXAS
JAMES SCOTT YOUNG
69031
REGISTERED PROFESSIONAL ENGINEER

USA PROFESSIONAL SERVICES GROUP, INC.
TEXAS BOARD OF PROFESSIONAL ENGINEERS
REGISTERED ENGINEERING FIRM F-1845
CIVIL ENGINEERS • SURVEYORS
PLANNERS • LANDSCAPE ARCHITECTS
1525 VICEROY DRIVE
DALLAS, TEXAS 75235
(214) 634-3300 FAX (214) 634-3338

DATE: SEPTEMBER 2013
SCALE: 1" = 50'H
SHEET: 6 OF 31
PROJECT NO. 2009016.04

P:\Sitework\2009016.04\Dwg\2009016_04-sep.dwg, Layout1, 9/10/2013 9:33:29 AM, Duc Tran

Profile View of S-1

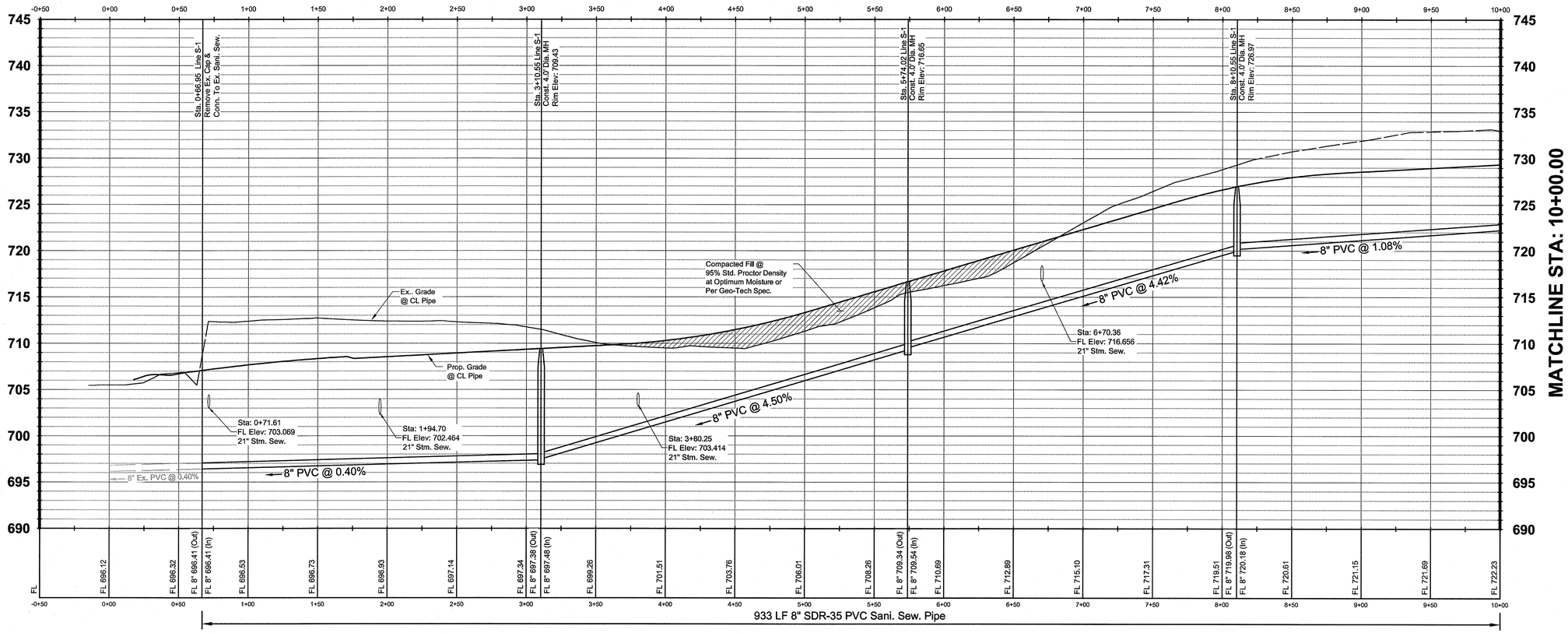

Profile View of S-1

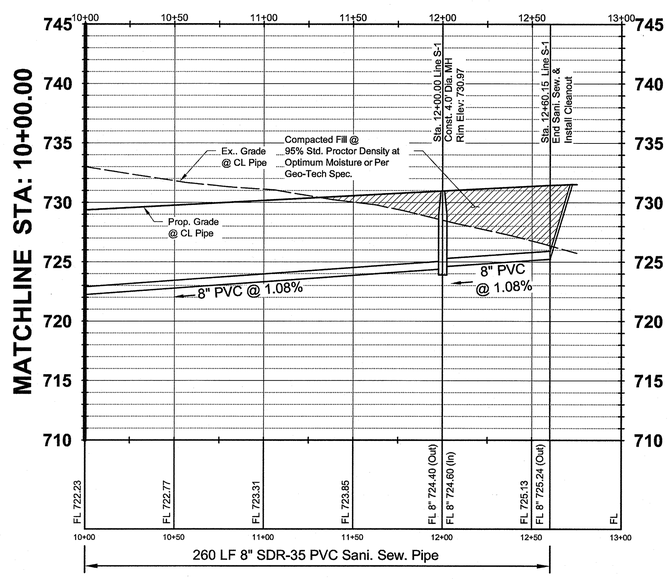

Profile View of S-2

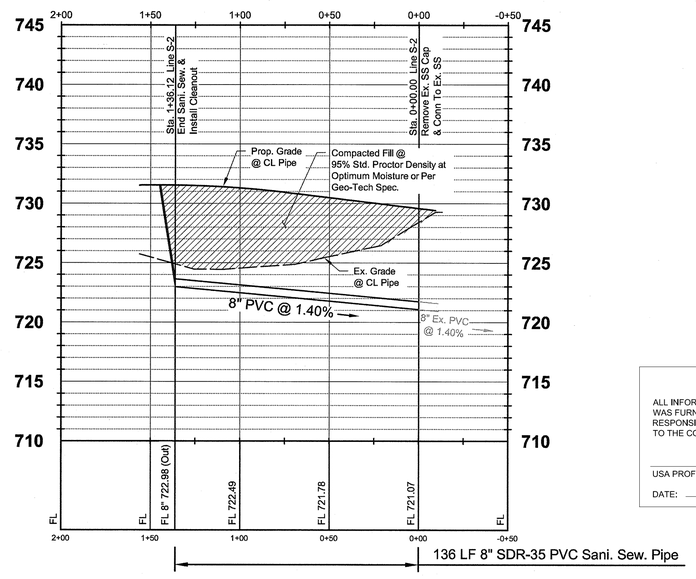

GRAPHIC SCALE

10 0 5 10 20 40

(IN FEET)
1 inch = 10 ft.

BENCHMARKS

TBM #1= Centerline of existing sanitary manhole at the centerline intersection of Appaloosa Lane and Equine Lane located in "The Carter Ranch Phase IIA". Elevation = 687.57 feet

TBM #2 = "X" Found in concrete at the centerline intersection of Equine Lane and Old Stables Drive located in "The Carter Ranch Phase IIA". Elevation =728.63 feet

CM #5 = Concrete monument with 5/8 inch iron rod with cap stamped "Huitt-Zollars" at the Southeast corner of the intersection of State Highway 289 and County Road 88, located approximately 45' feet South of the centerline of County Road 88 and 112' feet East of the centerline of State Highway 289 Elevation = 681.76 feet

RECORD DRAWING

ALL INFORMATION SHOWN ON THESE PLANS WAS FURNISHED BY THE CONTRACTOR ALL RESPONSIBILITY FOR THE ACCURACY BELONGS TO THE CONTRACTOR.

James Gardella
USA PROFESSIONAL SERVICES GROUP, INC.
DATE: June 16, 2014

REV	DESCRIPTION	DATE

THE CARTER RANCH - PHASE VB
CITY OF CELINA, COLLIN COUNTY, TEXAS

SANITARY SEWER PROFILES
LINES S-1 & S-2

19 FM LTD.
1221 North Interstate 35, Suite 200
Carrollton, Texas 75006
Phone (469) 892-7200 Fax (469) 892-7201

STATE OF TEXAS
JAMES SCOTT YOUNG
69031
REGISTERED PROFESSIONAL ENGINEER

USA PROFESSIONAL SERVICES GROUP, INC.
TEXAS BOARD OF PROFESSIONAL ENGINEERS REGISTERED ENGINEERING FIRM F-1845
CIVIL ENGINEERS • SURVEYORS
PLANNERS • LANDSCAPE ARCHITECTS
1525 VICEROY DRIVE
DALLAS, TEXAS 75235
(214) 634-3300 FAX (214) 634-3338

DATE: SEPTEMBER 2013
SCALE: 1" = 40'H 1" = 6'V
SHEET: 7 OF 31
PROJECT NO. 2009016.04

P:\Sakangn\2009016.04\Dwg\2009016_04-sprof.dwg, Layout1, 9/10/2013 9:36:57 AM, Duc Tran

See Sheet 9 For Inlet Calculations

SURFACE RUNOFF									
NO.	ACRES	PRE DEVELOPMENT				POST DEVELOPMENT			
		C	Tc	I_{100}	Q_{100}	C	Tc	I_{100}	Q_{100}
1	0.41	0.40	15	7.60	1.25	0.60	15	7.60	1.87
2	1.89	0.40	15	7.60	5.75	0.60	15	7.60	8.62
3	0.38	0.40	15	7.60	1.16	0.60	15	7.60	1.73
4	1.28	0.40	15	7.60	3.89	0.60	15	7.60	5.84
5	1.02	0.40	15	7.60	3.10	0.60	15	7.60	4.65
6	1.85	0.40	15	7.60	5.62	0.60	15	7.60	8.44
7	0.84	0.40	15	7.60	2.55	0.60	15	7.60	3.83
8	1.52	0.40	15	7.60	4.62	0.60	15	7.60	6.93
9	2.01	0.40	15	7.60	6.11	0.60	15	7.60	9.17
10	0.85	0.40	15	7.60	2.58	0.60	15	7.60	3.88
11	2.03	0.40	15	7.60	6.17	0.60	15	7.60	9.26
12	0.14	0.40	15	7.60	0.43	0.60	15	7.60	0.64
13	0.19	0.40	15	7.60	0.58	0.60	15	7.60	0.87
14	0.17	0.40	15	7.60	0.52	0.60	15	7.60	0.78
15	0.16	0.40	15	7.60	0.49	0.60	15	7.60	0.73
16	0.20	0.40	15	7.60	0.61	0.60	15	7.60	0.91
17	0.20	0.40	15	7.60	0.61	0.60	15	7.60	0.91
18	0.18	0.40	15	7.60	0.55	0.60	15	7.60	0.82
19	0.51	0.40	15	7.60	1.55	0.60	15	7.60	2.33
20	1.15	0.40	15	7.60	3.50	0.60	15	7.60	5.24
21	0.91	0.40	15	7.60	2.77	0.60	15	7.60	4.15
Allowable Release From Site					54.39				81.58

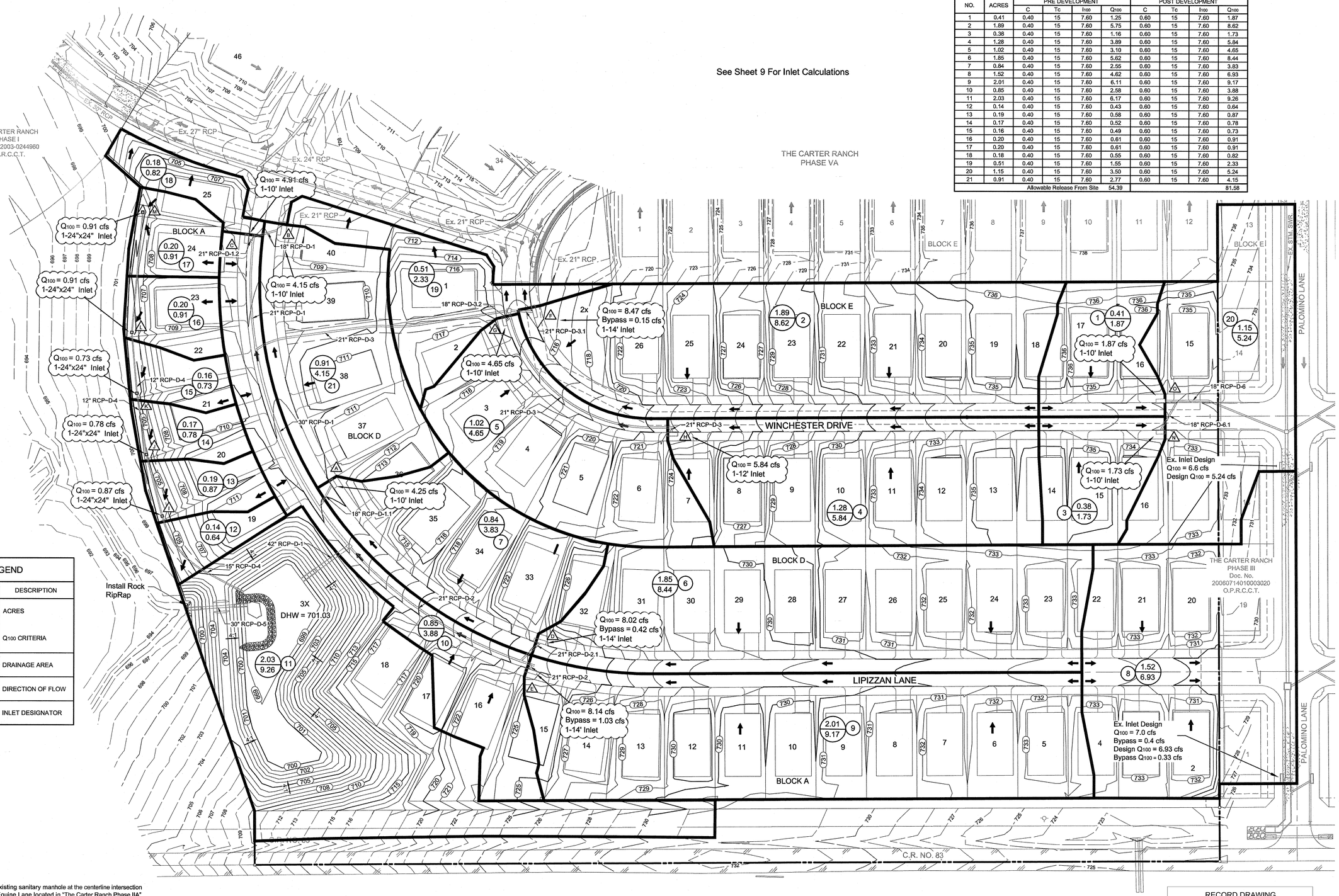

LEGEND	
SYMBOL	DESCRIPTION
Acres / CFS	ACRES / Q_{100} CRITERIA
1	DRAINAGE AREA
←	DIRECTION OF FLOW
A	INLET DESIGNATOR

BENCHMARKS

TBM #1= Centerline of existing sanitary manhole at the centerline intersection of Appaloosa Lane and Equine Lane located in "The Carter Ranch Phase IIA". Elevation = 687.57 feet

TBM #2 = "X" Found in concrete at the centerline intersection of Equine Lane and Old Stables Drive located in "The Carter Ranch Phase IIA". Elevation =728.63 feet

CM #5 = Concrete monument with 5/8 inch iron rod with cap stamped "Huitt-Zollars" at the Southeast corner of the intersection of State Highway 289 and County Road 88, located approximately 45' feet South of the centerline of County Road 88 and 112' feet East of the centerline of State Highway 289 Elevation = 681.76 feet

GRAPHIC SCALE

50 0 25 50 100 200

(IN FEET)
1 inch = 50 ft.

RECORD DRAWING

ALL INFORMATION SHOWN ON THESE PLANS WAS FURNISHED BY THE CONTRACTOR ALL RESPONSIBILITY FOR THE ACCURACY BELONGS TO THE CONTRACTOR.

James Gardella
USA PROFESSIONAL SERVICES GROUP, INC.
DATE: June 16, 2014

REV	DESCRIPTION	DATE

THE CARTER RANCH - PHASE VB
CITY OF CELINA, COLLIN COUNTY, TEXAS

DRAINAGE MAP

19 FM LTD.
1221 North Interstate 35, Suite 200
Carrollton, Texas 75006
Phone (469) 892-7200 Fax (469) 892-7201

STATE OF TEXAS
JAMES SCOTT YOUNG
69031
REGISTERED PROFESSIONAL ENGINEER

USA PROFESSIONAL SERVICES GROUP, INC.
TEXAS BOARD OF PROFESSIONAL ENGINEERS REGISTERED ENGINEERING FIRM F-1945
CIVIL ENGINEERS • SURVEYORS
PLANNERS • LANDSCAPE ARCHITECTS
1525 VICEROY DRIVE
DALLAS, TEXAS 75235
(214) 634-3300 FAX (214) 634-3338

DATE: SEPTEMBER 2013
SCALE: 1" = 50'H
SHEET: 8 OF 31
PROJECT NO. 2009016.04

P:\Siteworx\2009016.04\Dwg\2009016_04-db.dwg, DAM, 9/10/2013 9:41:11 AM, Duc Tran

DRAINAGE CALCULATIONS

DESIGN POINT		DIST (FT)	DRAINAGE AREA			RUNOFF FLOW (CFS)	FROM UPSTREAM INLET (cfs)	INLET BYPASS (CFS)	FLOW IN PIPE (cfs)	PIPE FLOW CAPACITY (cfs)	PIPE SIZE	PIPE TYPE	FRICTIONAL SLOPE"s_f" (FT/FT)	HYDRAULIC GRADIENT ELEVATIONS		HEAD LOSS AT CHANGE IN SECTION							ELEV OF INVERT AT DESIGN POINT			STRUCTURE TYPE	COMMENTS
DOWNSTREAM	UPSTREAM		INCREMENTAL		TOTAL AREA (AC)																		PIPE				
FROM STATION	TO STATION		INLET / LINE DESIGNATOR	AREA (AC)										DOWNSTREAM (FT)	UPSTREAM (FT)	FLOW IN "V1" (FPS)	FLOW OUT "V2" (FPS)	$V_2^2/2G$ (FT)	$V_1^2/2G$ (FT)	"K_J"	$K_JV_1^2/2$ (FT)	HEAD LOSS "H_J" (FEET)	DOWNSTREAM (FT)	UPSTREAM (FT)	PIPE SLOPE (FT/FT)		
D-1																											
4+35.91	4+63.62	27.71	Inlet B	0.91	0.91	4.15	0.00	0.00	4.15	6.66	18	RCP	0.0016	705.26	705.30	0.00	2.35	0.09	0.00	0.25	0.00	0.09	702.94	703.05	0.0040	Inlet	FULL FLOW
4+29.91	4+35.91	6.00	-	0.00	0.91	0.00	0.00	0.00	4.15	10.04	21	RCP	0.0007	705.30	705.30	2.35	1.73	0.05	0.09	0.00	0.00	-0.04	702.79	702.81	0.0040	Wye	FULL FLOW
3+13.76	4+29.91	116.15	D-1.2	0.85	1.76	4.91	0.00	0.00	9.06	10.04	21	RCP	0.0032	704.74	705.12	1.73	3.77	0.22	0.05	0.00	0.00	0.17	702.32	702.79	0.0040	-	FULL FLOW
3+10.10	3+13.76	3.66	-	0.00	1.76	0.00	0.00	0.00	9.06	26.00	30	RCP	0.0005	704.91	704.91	3.77	1.85	0.05	0.22	0.00	0.00	-0.17	701.56	701.57	0.0040	-	FULL FLOW
1+18.88	3+10.10	191.22	D-3	4.19	5.95	18.96	0.00	0.00	28.02	26.00	30	RCP	0.0046	703.57	704.46	1.85	5.71	0.51	0.05	0.00	0.00	0.45	700.79	701.56	0.0040	Wye	FULL FLOW
0+64.82	1+18.88	54.06	D-1.1	4.19	10.14	4.25	0.00	0.00	32.27	26.00	30	RCP	0.0062	703.07	703.40	5.71	6.58	0.67	0.51	0.00	0.00	0.17	700.57	700.79	0.0040	Wye	FULL FLOW
0+18.38	0+64.82	46.44	D-2	0.84	10.98	16.17	0.00	0.00	48.43	45.09	42	RCP	0.0023	702.50	702.61	6.58	5.04	0.39	0.67	0.25	0.17	0.23	699.00	699.09	0.0020	90 MH	FULL FLOW
D-1.1																											
0+00.00	0+29.17	29.17	Inlet A	0.84	0.84	3.83	0.42	0.00	4.25	43.19	18	RCP		704.91	704.96	0.00	2.40	0.09	0.00	0.25	0.00	0.09	701.29	706.08	0.1683	Inlet	PARTIAL FLOW
D-1.2																											
0+00.00	0+06.36	6.36	Inlet C	0.85	0.85	3.88	1.03	0.00	4.91	56.86	21	RCP	0.0010	705.26	705.27	0.00	2.04	0.06	0.00	0.25	0.00	0.06	702.80	703.60	0.1282	Inlet	PARTIAL FLOW
D-2																											
2+43.17	2+49.54	6.36	Inlet E	2.01	2.01	9.17	0.00	1.03	8.14	61.15	21	RCP		718.34	718.36	0.00	3.39	0.18	0.00	0.25	0.00	0.18	716.59	717.54	0.1483	Inlet	PARTIAL FLOW
2+31.77	2+43.17	11.40	-	0.00	2.01	0.00	0.00	0.00	8.14	32.77	21	RCP	0.0026	717.86	717.89	3.39	3.39	0.18	0.18	0.25	0.04	0.00	716.11	716.59	0.0426	Inlet	PARTIAL FLOW
0+00.00	2+31.77	231.77	D-2.1	1.85	3.86	8.02	0.00	0.00	16.17	32.77	21	RCP	0.0104	707.98	710.38	3.39	6.72	0.70	0.18	0.25	0.04	0.66	706.23	716.11	0.0426	Inlet	PARTIAL FLOW
D-2.1																											
0+00.00	0+29.17	29.17	Inlet D	1.85	1.85	8.44	0.00	0.42	8.02	35.15	21	RCP		717.86	717.93	0.00	3.34	0.17	0.00	0.25	0.00	0.17	716.09	717.54	0.0490	Inlet	PARTIAL FLOW
D-3																											
5+28.10	5+34.45	6.35	Inlet H	1.28	1.28	5.84	0.00	0.00	5.84	63.58	21	RCP		717.95	717.96	0.00	2.43	0.09	0.00	0.25	0.00	0.09	716.20	717.22	0.1603	Inlet	PARTIAL FLOW
5+07.81	5+28.10	20.29	-	0.00	1.28	0.00	0.00	0.00	5.84	26.57	21	RCP		717.39	717.42	2.43	2.43	0.09	0.09	0.00	0.00	0.00	715.64	716.20	0.0280	Wye	PARTIAL FLOW
2+92.97	5+07.81	214.84	-	0.00	1.28	0.00	0.00	0.00	5.84	26.57	21	RCP		711.41	711.70	2.43	2.43	0.09	0.09	0.00	0.00	0.00	709.62	715.64	0.0280	-	PARTIAL FLOW
2+85.79	2+92.97	7.18	D-3.2	1.02	2.30	4.65	0.00	0.00	10.49	26.57	21	RCP		711.17	711.20	2.43	4.36	0.30	0.09	0.00	0.00	0.20	709.42	709.62	0.0280	Wye	PARTIAL FLOW
1+84.17	2+85.79	101.62	D-3.1	1.89	4.19	8.47	0.00	0.00	18.96	25.26	21	RCP		708.60	710.05	4.36	7.89	0.97	0.30	0.25	0.07	0.89	706.85	709.42	0.0253	90 MH	PARTIAL FLOW
1+51.83	1+84.17	32.34	-	0.00	4.19	0.00	0.00	0.00	18.96	25.26	21	RCP		707.78	708.24	7.89	7.89	0.97	0.97	0.00	0.00	0.00	706.03	706.85	0.0253	-	PARTIAL FLOW
1+22.70	1+51.83	29.13	-	0.00	4.19	0.00	0.00	0.00	18.96	25.26	21	RCP		707.04	707.45	7.89	7.89	0.97	0.97	0.00	0.00	0.00	705.29	706.03	0.0253	Wye	PARTIAL FLOW
0+36.18	1+22.70	86.52	-	0.00	4.19	0.00	0.00	0.00	18.96	25.26	21	RCP		705.43	706.66	7.89	7.89	0.97	0.97	0.00	0.00	0.00	703.11	705.29	0.0253	-	PARTIAL FLOW
0+00.00	0+36.18	36.18	-	0.00	4.19	0.00	0.00	0.00	18.96	28.49	21	RCP	0.0142	704.91	705.43	7.89	7.89	0.97	0.97	0.00	0.00	0.00	701.93	703.11	0.0322	-	FULL FLOW
D-3.1																											
0+00.00	0+26.39	26.39	Inlet F	1.89	1.89	8.62	0.00	0.15	8.47	32.00	21	RCP		711.17	711.25	0.00	3.52	0.19	0.00	0.25	0.00	0.19	709.44	710.51	0.0406	Inlet	PARTIAL FLOW
D-3.2																											
0+00.00	0+06.39	6.39	Inlet G	1.02	1.02	4.65	0.00	0.00	4.65	40.72	18	RCP		711.17	711.18	0.00	2.63	0.11	0.00	0.25	0.00	0.11	709.74	710.58	0.1496	Inlet	PARTIAL FLOW
D-4																											
3+27.8	4+61.96	134.15	Inlet M	0.20	0.20	0.91	0.00	0.00	0.91	2.26	12	RCP	0.0006	702.55	702.64	0.00	1.16	0.02	0.00	0.25	0.00	0.02	700.56	701.10	0.0040	Inlet	FULL FLOW
2+59.82	3+27.8	67.99	Inlet L	0.20	0.20	0.91	0.00	0.00	1.82	2.26	12	RCP	0.0026	702.30	702.48	1.16	2.32	0.08	0.02	0.25	0.01	0.08	700.29	700.56	0.0040	Inlet	FULL FLOW
1+90.75	2+59.82	69.07	Inlet K	0.16	0.16	0.73	0.00	0.00	2.55	2.26	12	RCP	0.0051	701.95	702.30	2.32	3.25	0.16	0.08	0.25	0.02	0.00	700.01	700.29	0.0040	Inlet	FULL FLOW
1+20.03	1+90.75	70.71	Inlet J	0.17	0.17	0.78	0.00	0.00	3.33	4.09	15	RCP	0.0026	701.69	701.87	3.25	2.71	0.11	0.16	0.25	0.04	0.07	699.48	699.76	0.0040	Inlet	FULL FLOW
0+37.37	1+0.03	82.66	Inlet I	0.19	0.19	0.87	0.00	0.00	4.20	4.09	15	RCP	0.0042	701.19	701.53	2.71	3.42	0.18	0.11	0.25	0.03	0.15	699.15	699.48	0.0040	Inlet	FULL FLOW
0+00.00	0+37.37	37.37	-	0.00	0.00	0.00	0.00	0.00	4.20	4.09	15	RCP	0.0042	701.03	701.19	3.42	3.42	0.18	0.18	0.00	0.00	0.00	699.00	699.15	0.0040	Inlet	FULL FLOW
D-6																											
0+35.73	0+49.78	14.05	Inlet O	0.41	0.41	1.87	0.00	0.00	1.87	17.58	18	RCP		729.47	729.47	0.00	1.06	0.02	0.00	0.25	0.00	0.02	727.97	728.36	0.0279	Inlet	PARTIAL FLOW
0+01.96	0+35.73	33.77	D-6.1	0.38	0.38	1.73	0.00	0.00	3.60	17.58	18	RCP		728.87	728.91	1.06	2.04	0.06	0.02	0.25	0.00	0.06	727.02	727.97	0.0279	Inlet	PARTIAL FLOW
0+00.00	0+01.96	1.96	-	0.00	0.00	0.00	0.00	0.00	3.60	17.58	18	RCP	0.0012	728.87	728.87	2.04	2.04	0.06	0.06	0.25	0.02	0.00	726.97	727.02	0.0279	Inlet	FULL FLOW
D-6.1																											
0+00.00	0+38.11	38.11	Inlet N	0.38	0.38	1.73	0.00	0.00	1.73	10.15	18	RCP		729.47	729.48	0.00	0.98	0.01	0.00	0.25	0.00	0.01	727.97	728.32	0.0093	Inlet	PARTIAL FLOW

* Refer To Plan and Profiles Sheets For Partial Flow Velocities Indicated As Partial Flow Pipe Segments In Comments.

GUTTER FLOW / INLET COMPUTATIONS

INLET		D.A.	Q	CO	Qa	z	n	s	y	w	a	ql	Lr	La	La/Lr	a/y	Ql	Ql-Qa	Carry-over to:	Remarks
ID	LOCATION	(No.)	(cfs)	(cfs)	(cfs)			ft/ft	(ft)	(ft)	(ft)	(cfs/ft)	(ft)	(ft)			(cfs)			
A	Lipizzan Dr.	7	3.83	0.42	4.25	36.000	0.0175	0.0100	0.29	10.4413	0.3300	0.5796	7.33	10.00	1.37	1.14	5.80	1.55	0.00	
B	Lipizzan Dr.	21	4.15	0.00	4.15	36.000	0.0175	0.0149	0.27	9.6062	0.3300	0.5578	7.44	10.00	1.34	1.24	5.58	1.43	0.00	
C	Lipizzan Dr.	10	3.88	1.03	4.91	36.000	0.0175	0.0220	0.26	9.5089	0.3300	0.5553	8.84	10.00	1.13	1.25	5.55	0.65	0.00	
D	Lipizzan Dr.	6	8.44	0.00	8.44	36.000	0.0175	0.0449	0.28	10.1939	0.3300	0.5731	14.73	14.00	0.95	1.17	8.02	-0.42	0.42	
E	Lipizzan Dr.	9	9.17	0.00	9.17	36.000	0.0175	0.0449	0.29	10.5160	0.3300	0.5816	15.77	14.00	0.89	1.13	8.14	-1.03	1.03	
F	Winchester Drive	2	8.62	0.00	8.62	36.000	0.0175	0.0257	0.32	11.4080	0.3300	0.6053	14.24	14.00	0.98	1.04	8.47	-0.15	0.15	
G	Winchester Drive	5	4.65	0.00	4.65	36.000	0.0175	0.0200	0.26	9.4866	0.3300	0.5547	8.38	10.00	1.19	1.25	5.55	0.90	0.00	
H	Winchester Drive	4	5.84	0.00	5.84	36.000	0.0175	0.0383	0.25	9.1477	0.3300	0.5460	10.70	12.00	1.12	1.30	6.55	0.71	0.00	

Q - Disharge calculated for DA
CO - Carryover from upstream inlet
Qa - Reciprocol of cross slope
z - Reciprocol of cross slope
n - Manning's roughness
s - Gutter slope
y - Gutter depth of flow
w - Width of street conveying flow
a - Depth of depression

ql - Capture per foot of inlet with 100% interception
Lr - Required inlet for 100% interception
La - Actual inlet length
Ql Actual inlet interception

RECORD DRAWING

ALL INFORMATION SHOWN ON THESE PLANS WAS FURNISHED BY THE CONTRACTOR ALL RESPONSIBILITY FOR THE ACCURACY BELONGS TO THE CONTRACTOR.

James Gardella
USA PROFESSIONAL SERVICES GROUP, INC.
DATE: June 16, 2014

REV	DESCRIPTION	DATE

THE CARTER RANCH - PHASE VB
CITY OF CELINA, COLLIN COUNTY, TEXAS

19 FM LTD.
1221 North Interstate 35, Suite 200
Carrollton, Texas 75006
Phone (469) 892-7200 Fax (469) 892-7201

STORM SEWER CALCULATIONS

STATE OF TEXAS
JAMES SCOTT YOUNG
69031
REGISTERED PROFESSIONAL ENGINEER
9/12/13

USA PROFESSIONAL SERVICES GROUP, INC.
TEXAS BOARD OF PROFESSIONAL ENGINEERS
REGISTERED ENGINEERING FIRM F-1845
CIVIL ENGINEERS • SURVEYORS
PLANNERS • LANDSCAPE ARCHITECTS
1525 VICEROY DRIVE
DALLAS, TEXAS 75235
(214) 634-3300 FAX (214) 634-3338

DATE: SEPTEMBER 2013
SCALE: 1" = 1"
SHEET: 9 OF 31
PROJECT NO. 2009016.04

P:\Sdskengn\2009016.04\Dwg\2009016_04-sd calc.dwg, Layout1, 9/12/2013 5:48:57 PM, David Locklear

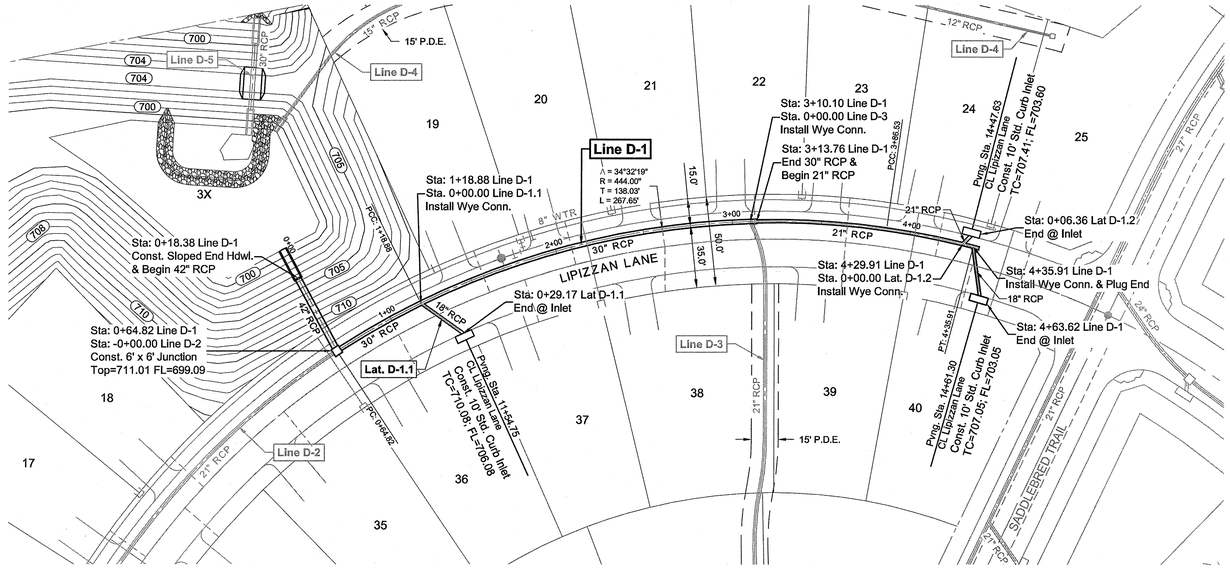

Profile View of D-1

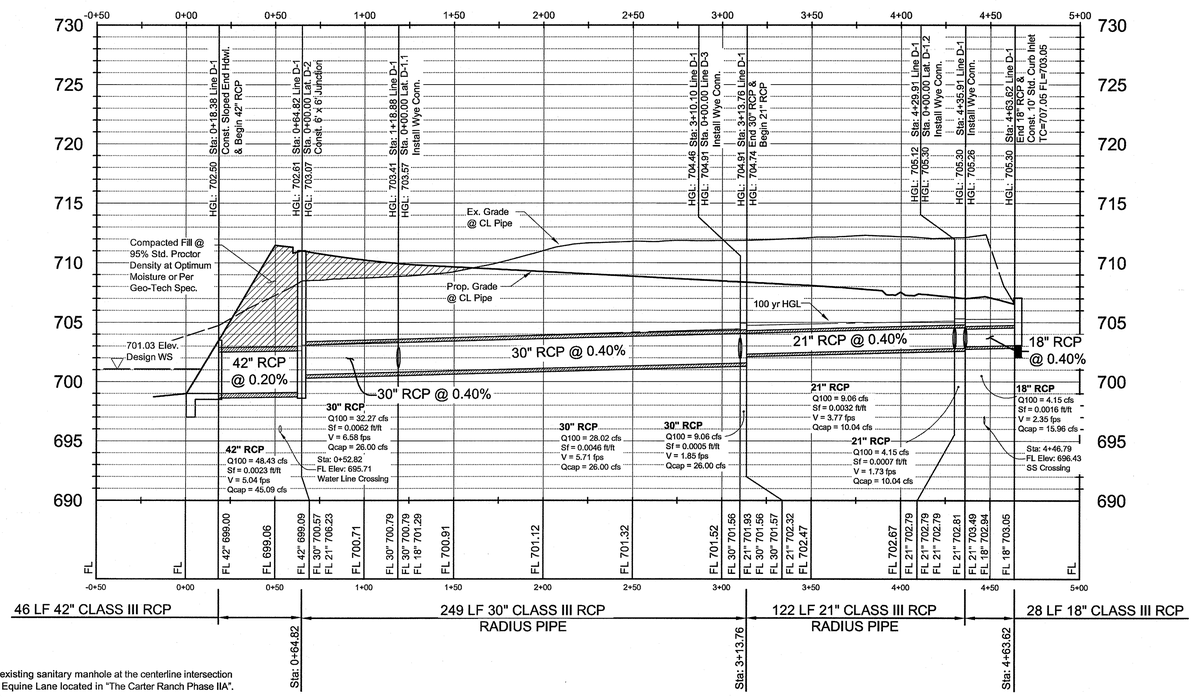

Profile View of D-1.1

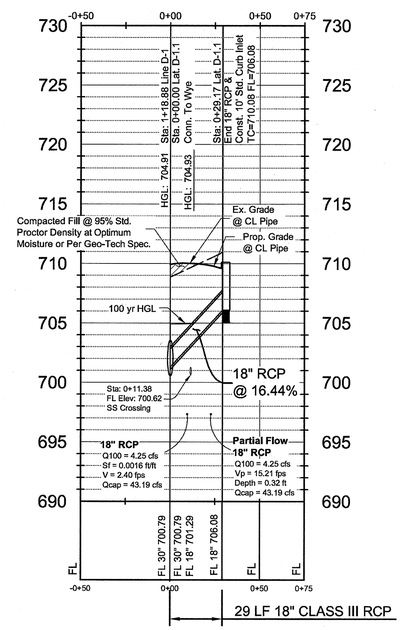

Profile View of D-1.2

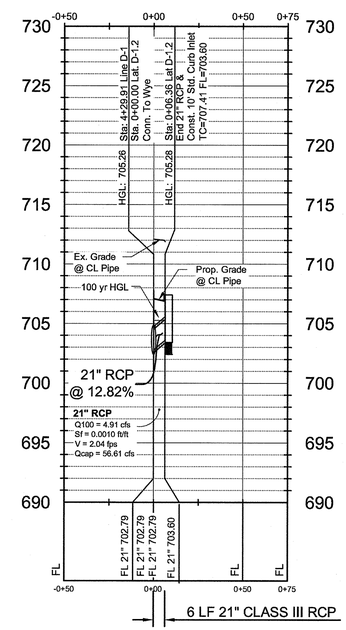

BENCHMARKS

TBM #1= Centerline of existing sanitary manhole at the centerline intersection of Appaloosa Lane and Equine Lane located in "The Carter Ranch Phase IIA".
Elevation = 687.57 feet

TBM #2 = "X" Found in concrete at the centerline intersection of Equine Lane and Old Stables Drive located in "The Carter Ranch Phase IIA".
Elevation =728.63 feet

CM #5 = Concrete monument with 5/8 inch iron rod with cap stamped "Huitt-Zollars" at the Southeast corner of the intersection of State Highway 289 and County Road 88, located approximately 45' feet South of the centerline of County Road 88 and 112' feet East of the centerline of State Highway 289
Elevation = 681.76 feet

GRAPHIC SCALE

40 0 20 40 80 160

(IN FEET)
1 inch = 40 ft.

RECORD DRAWING

ALL INFORMATION SHOWN ON THESE PLANS WAS FURNISHED BY THE CONTRACTOR ALL RESPONSIBILITY FOR THE ACCURACY BELONGS TO THE CONTRACTOR.

James Gardella
USA PROFESSIONAL SERVICES GROUP, INC.
DATE: June 16, 2014

Notes:
See Sheet 2 For General Notes
See Sheets 29 & 30 For Storm Sewer Details

REV	DESCRIPTION	DATE

THE CARTER RANCH - PHASE VB
CITY OF CELINA, COLLIN COUNTY, TEXAS

19 FM, LTD.
1221 North Interstate 35, Suite 200
Carrollton, Texas 75006
Phone (469) 892-7200 Fax (469) 892-7201

STORM SEWER PLAN & PROFILES
LINE D-1
LAT. D-1.1 & LAT. D-1.2

STATE OF TEXAS
JAMES SCOTT YOUNG
69031
REGISTERED
PROFESSIONAL ENGINEER
9/12/13

USA PROFESSIONAL SERVICES GROUP, INC.
TEXAS BOARD OF PROFESSIONAL ENGINEERS
REGISTERED ENGINEERING FIRM F-1845
CIVIL ENGINEERS • SURVEYORS
PLANNERS • LANDSCAPE ARCHITECTS
1525 VICEROY DRIVE
DALLAS, TEXAS 75235
(214) 634-3300 FAX (214) 634-3338

DATE: SEPTEMBER 2013
SCALE: 1" = 40'H/6'V
SHEET: 10 OF 31
PROJECT NO. 2009016.04

P:\Sdkwrgn\2009016.04\Dwg\2009016_04-sd (d-1).dwg, Sheet - (2), 9/10/2013 9:51:12 AM, Doc Tran

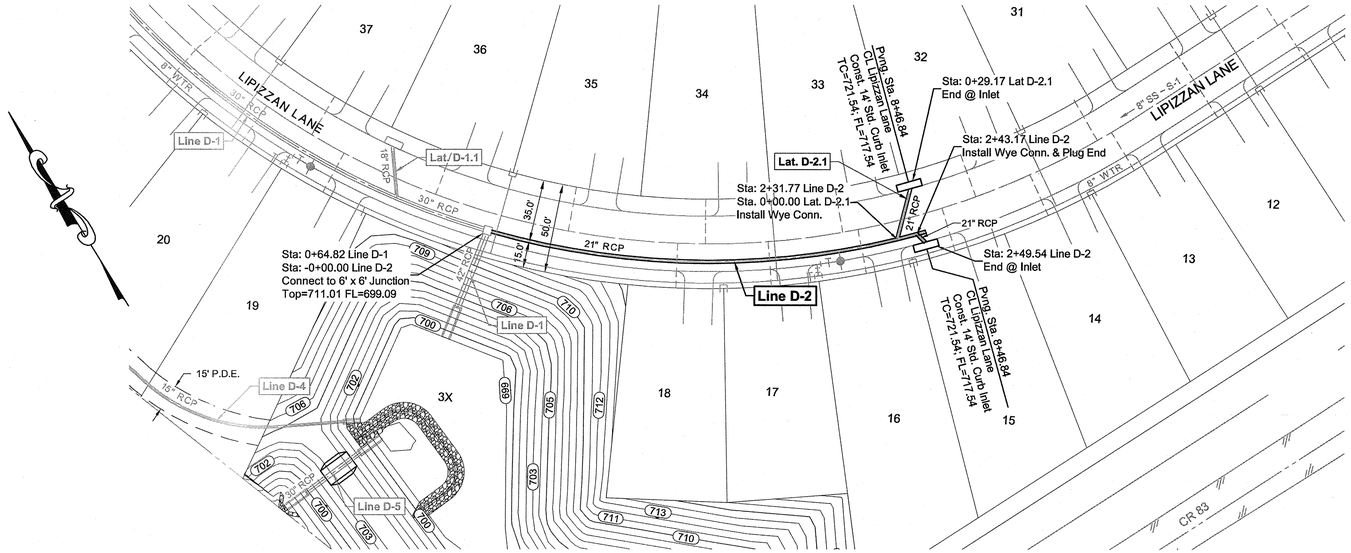

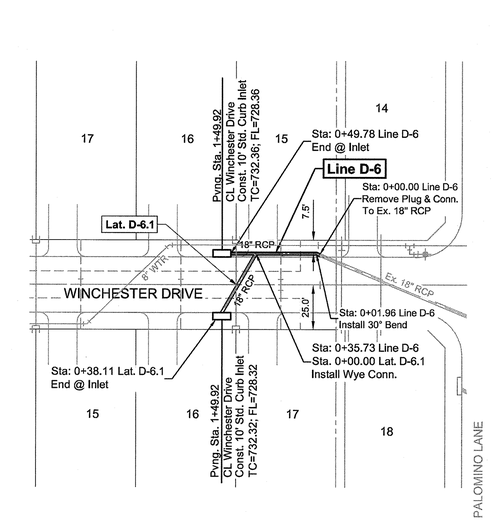

Profile View of D-2

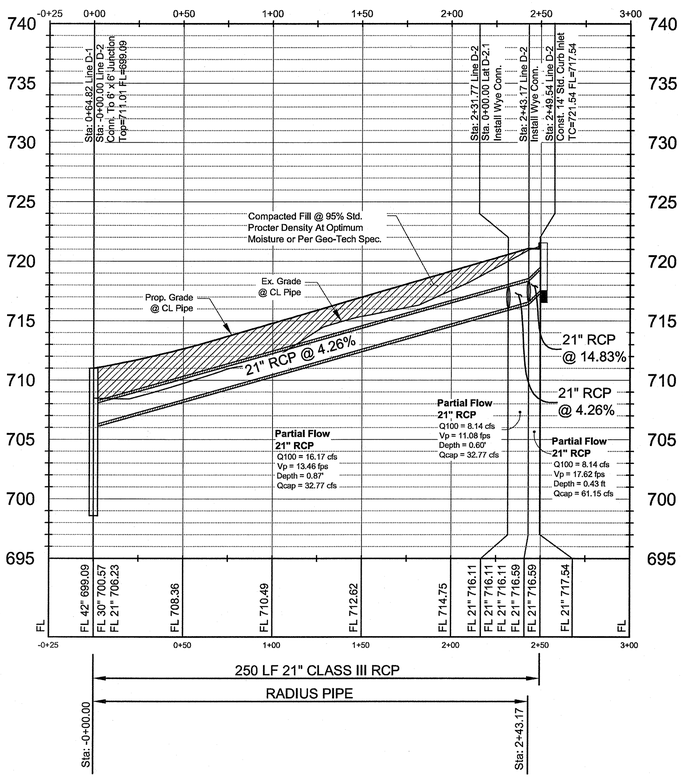

Profile View of D-2.1

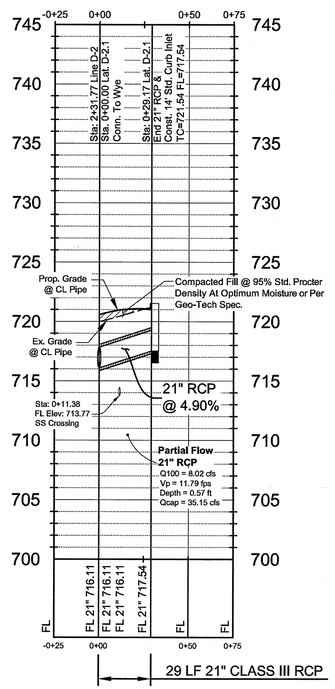

Profile View of D-6

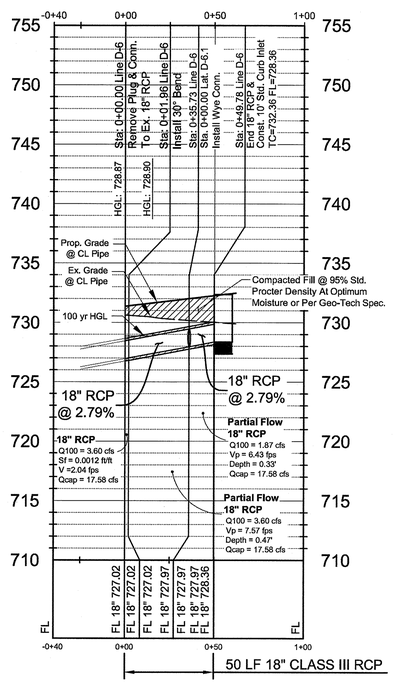

Profile View of D-6.1

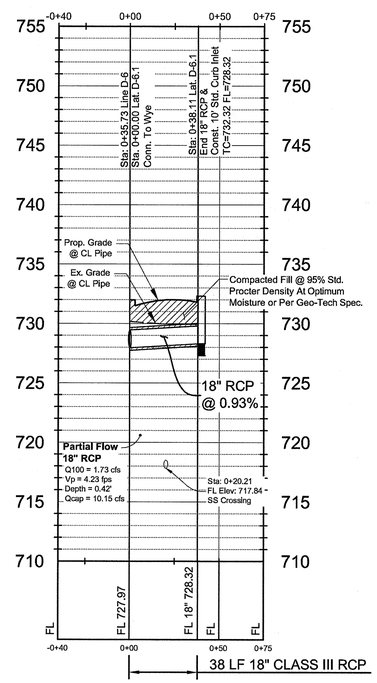

BENCHMARKS

TBM #1= Centerline of existing sanitary manhole at the centerline intersection of Appaloosa Lane and Equine Lane located in "The Carter Ranch Phase IIA". Elevation = 687.57 feet

TBM #2 = "X" Found in concrete at the centerline intersection of Equine Lane and Old Stables Drive located in "The Carter Ranch Phase IIA". Elevation =728.63 feet

CM #5 = Concrete monument with 5/8 inch iron rod with cap stamped "Huitt-Zollars" at the Southeast corner of the intersection of State Highway 289 and County Road 88, located approximately 45' feet South of the centerline of County Road 88 and 112' feet East of the centerline of State Highway 289 Elevation = 681.76 feet

GRAPHIC SCALE

40 0 20 40 80 160

(IN FEET)
1 inch = 40 ft.

RECORD DRAWING

ALL INFORMATION SHOWN ON THESE PLANS WAS FURNISHED BY THE CONTRACTOR ALL RESPONSIBILITY FOR THE ACCURACY BELONGS TO THE CONTRACTOR.

James Gardella
USA PROFESSIONAL SERVICES GROUP, INC.
DATE: June 16, 2014

Notes:
See Sheet 2 For General Notes
See Sheets 29 & 30 For Storm Sewer Details

REV	DESCRIPTION	DATE

THE CARTER RANCH - PHASE VB
CITY OF CELINA, COLLIN COUNTY, TEXAS

STORM SEWER PLAN & PROFILES
LINE D-2 & LAT. D-2.1
LINE D-6 & LAT. D-6.1

19 FM LTD.
1221 North Interstate 35, Suite 200
Carrollton, Texas 75006
Phone (469) 892-7200 Fax (469) 892-7201

STATE OF TEXAS
JAMES SCOTT YOUNG
69031
REGISTERED PROFESSIONAL ENGINEER
9/10/2013

USA PROFESSIONAL SERVICES GROUP, INC.
TEXAS BOARD OF PROFESSIONAL ENGINEERS
REGISTERED ENGINEERING FIRM F-1845
CIVIL ENGINEERS • SURVEYORS
PLANNERS • LANDSCAPE ARCHITECTS
1525 VICEROY DRIVE
DALLAS, TEXAS 75235
(214) 634-3300 FAX (214) 634-3338

DATE: SEPTEMBER 2013
SCALE: 1" = 40'H/6'V
SHEET: 11 OF 31
PROJECT NO. 2009016.04

P:\Sdkwing\2009016.04\Dwg\ 2009016_04-sd (2-2).dwg - Sheet - (2), 9/10/2013 9:28:56 AM, Duc Tran

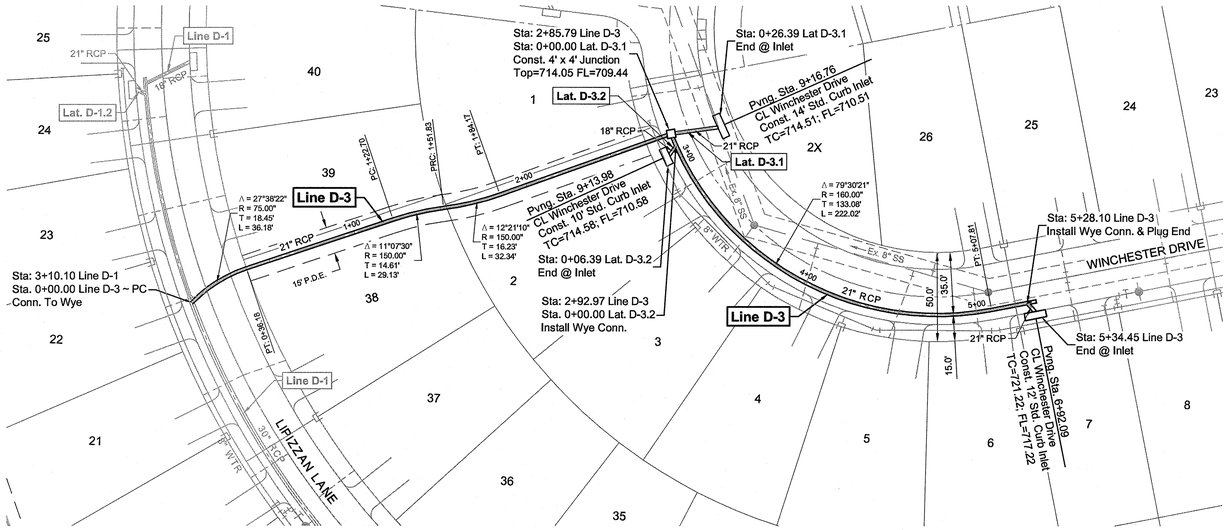

Profile View of D-3

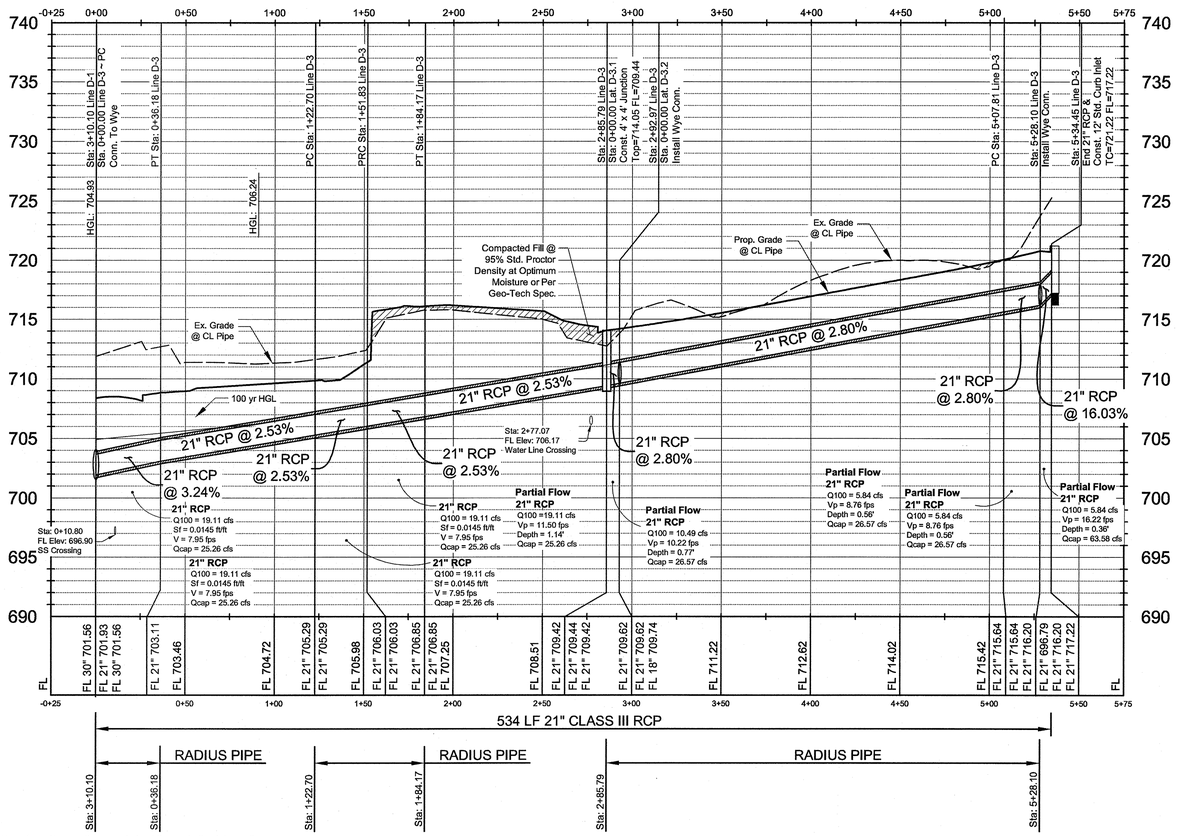

Profile View of D-3.1

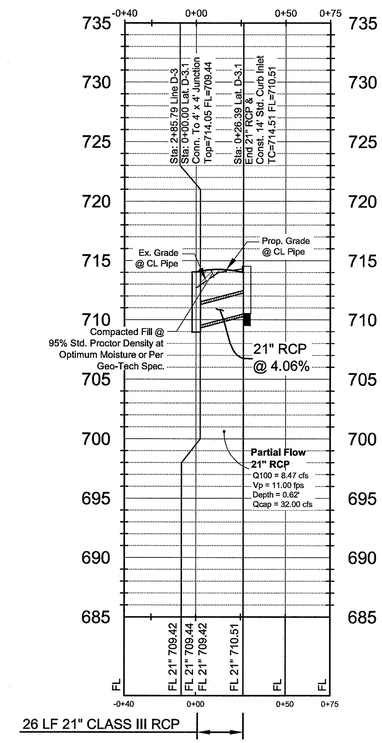

Profile View of D-3.2

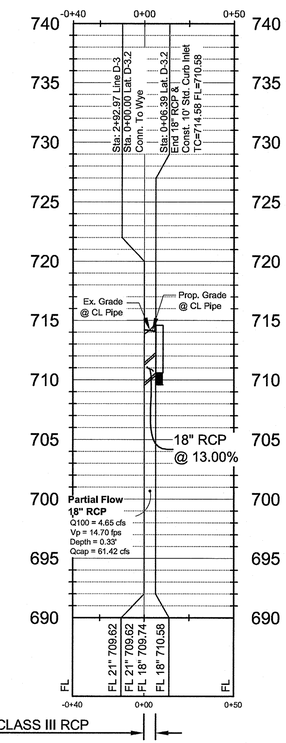

BENCHMARKS

TBM #1= Centerline of existing sanitary manhole at the centerline intersection of Appaloosa Lane and Equine Lane located in "The Carter Ranch Phase IIA". Elevation = 687.57 feet

TBM #2 = "X" Found in concrete at the centerline intersection of Equine Lane and Old Stables Drive located in "The Carter Ranch Phase IIA". Elevation =728.63 feet

CM #5 = Concrete monument with 5/8 inch iron rod with cap stamped "Huitt-Zollars" at the Southeast corner of the intersection of State Highway 289 and County Road 88, located approximately 45' feet South of the centerline of County Road 88 and 112' feet East of the centerline of State Highway 289 Elevation = 681.76 feet

GRAPHIC SCALE

40 0 20 40 80 160

(IN FEET)
1 inch = 40 ft.

RECORD DRAWING

ALL INFORMATION SHOWN ON THESE PLANS WAS FURNISHED BY THE CONTRACTOR. ALL RESPONSIBILITY FOR THE ACCURACY BELONGS TO THE CONTRACTOR.

James Gardella
USA PROFESSIONAL SERVICES GROUP, INC.
DATE: June 16, 2014

Notes:
See Sheet 2 For General Notes
See Sheets 29 & 30 For Storm Sewer Details

REV	DESCRIPTION	DATE

THE CARTER RANCH - PHASE VB

CITY OF CELINA, COLLIN COUNTY, TEXAS

STORM SEWER PLAN & PROFILE
LINE D-3
LAT. D-3.1 & LAT. D-3.2

19 FM LTD.
1221 North Interstate 35, Suite 200
Carrollton, Texas 75006
Phone (469) 892-7200 Fax (469) 892-7201

STATE OF TEXAS
JAMES SCOTT YOUNG
69031
REGISTERED PROFESSIONAL ENGINEER
6/19/13

USA PROFESSIONAL SERVICES GROUP, INC.
TEXAS BOARD OF PROFESSIONAL ENGINEERS
REGISTERED ENGINEERING FIRM F-1945
CIVIL ENGINEERS • SURVEYORS
PLANNERS • LANDSCAPE ARCHITECTS
1525 VICEROY DRIVE
DALLAS, TEXAS 75235
(214) 634-3300 FAX (214) 634-3338

DATE: SEPTEMBER 2013
SCALE: 1" = 40'H/6'V
SHEET: 12 OF 31
PROJECT NO. 2009016.04

P:\Sdeangin\2009016.04\Dwg\2009016_04-sd (d-3).dwg , Sheet - (2) , 9/10/2013 10:06:39 AM , Duc Tran

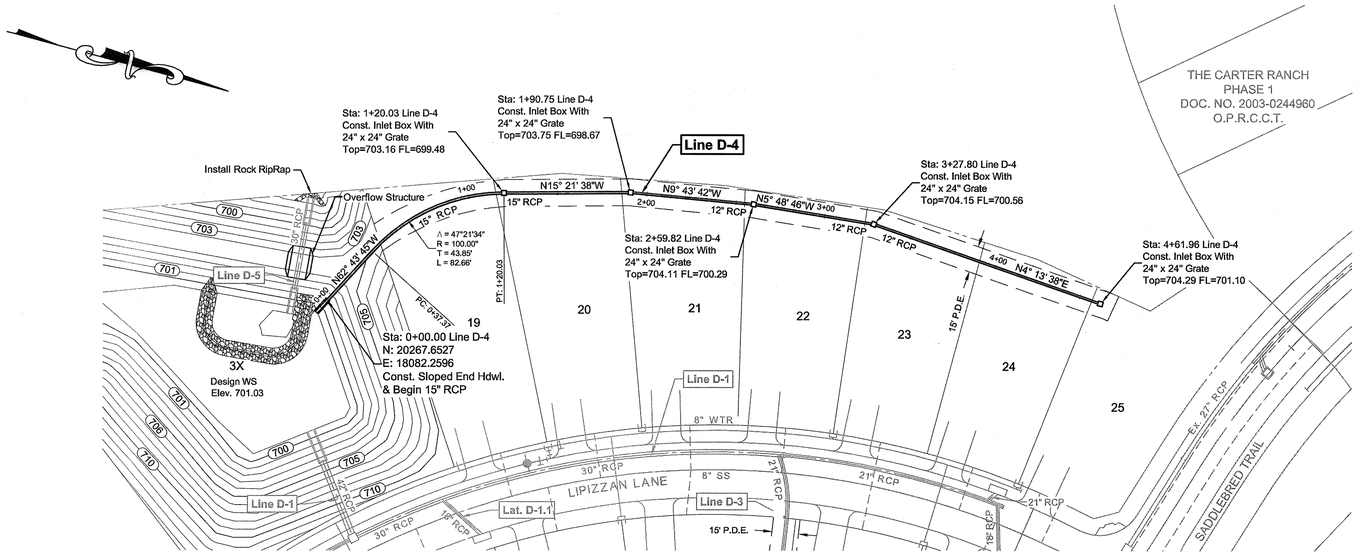

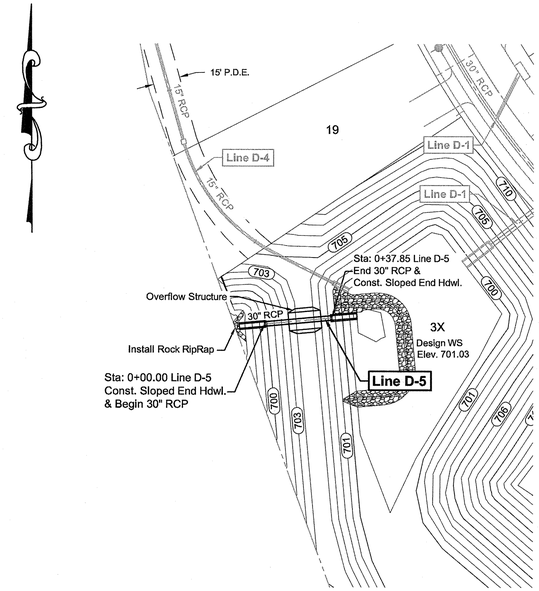

Profile View of D-4

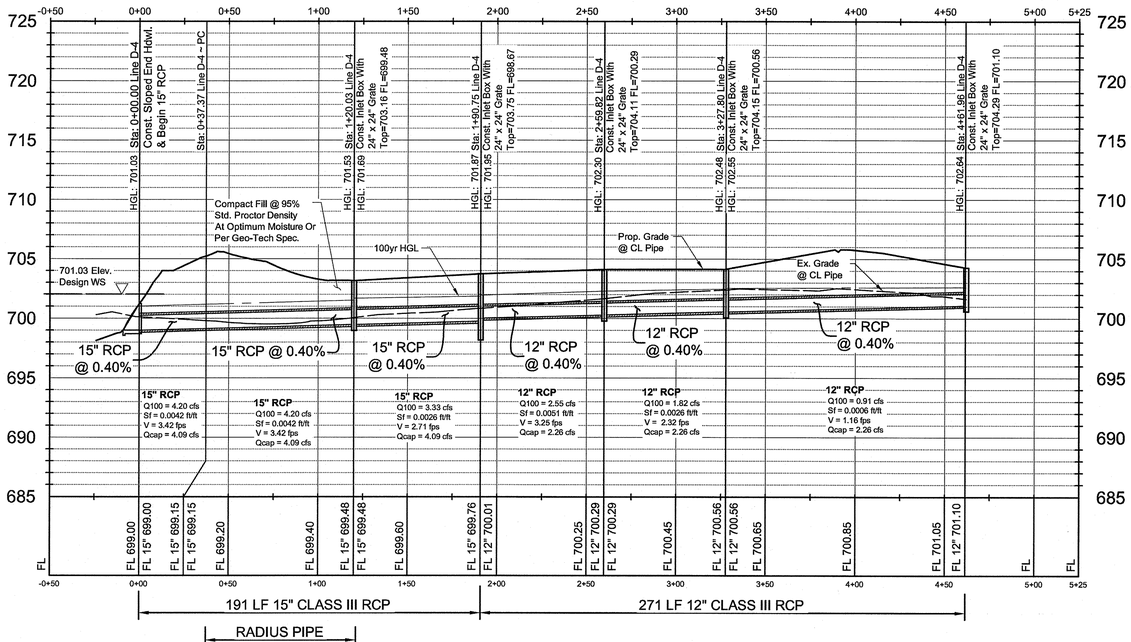

Profile View of D-5

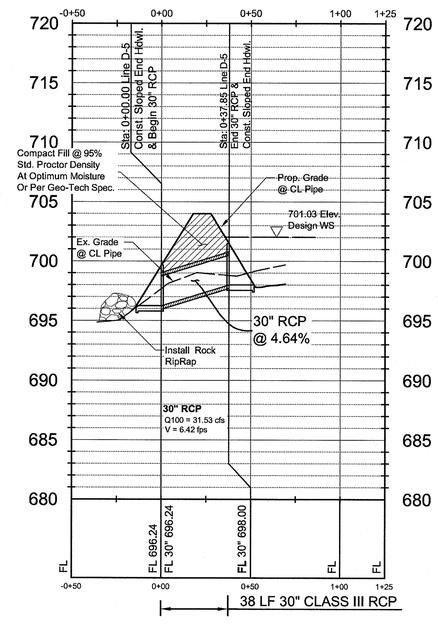

BENCHMARKS

TBM #1= Centerline of existing sanitary manhole at the centerline intersection of Appaloosa Lane and Equine Lane located in "The Carter Ranch Phase IIA". Elevation = 687.57 feet

TBM #2 = "X" Found in concrete at the centerline intersection of Equine Lane and Old Stables Drive located in "The Carter Ranch Phase IIA". Elevation =728.63 feet

CM #5 = Concrete monument with 5/8 inch iron rod with cap stamped "Huitt-Zollars" at the Southeast corner of the intersection of State Highway 289 and County Road 88, located approximately 45' feet South of the centerline of County Road 88 and 112' feet East of the centerline of State Highway 289 Elevation = 681.76 feet

GRAPHIC SCALE

40 0 20 40 80 160

(IN FEET)
1 inch = 40 ft.

RECORD DRAWING

ALL INFORMATION SHOWN ON THESE PLANS WAS FURNISHED BY THE CONTRACTOR ALL RESPONSIBILITY FOR THE ACCURACY BELONGS TO THE CONTRACTOR.

James Gardella
USA PROFESSIONAL SERVICES GROUP, INC.
DATE: June 16, 2014

Notes:
See Sheet 2 For General Notes
See Sheets 29 & 30 For Storm Sewer Details

REV	DESCRIPTION	DATE

19 FM LTD.
1221 North Interstate 35, Suite 200
Carrollton, Texas 75006
Phone (469) 892-7200 Fax (469) 892-7201

THE CARTER RANCH - PHASE VB
CITY OF CELINA, COLLIN COUNTY, TEXAS

STORM SEWER PLAN & PROFILE
LINE D-4 & LINE D-5

STATE OF TEXAS
JAMES SCOTT YOUNG
69031
REGISTERED PROFESSIONAL ENGINEER

USA PROFESSIONAL SERVICES GROUP, INC.
TEXAS BOARD OF PROFESSIONAL ENGINEERS
REGISTERED ENGINEERING FIRM F-1845
CIVIL ENGINEERS • SURVEYORS
PLANNERS • LANDSCAPE ARCHITECTS
1525 VICEROY DRIVE
DALLAS, TEXAS 75235
(214) 634-3300 FAX (214) 634-3338

DATE: SEPTEMBER 2013
SCALE: 1" = 40'H/6'V
SHEET: 13 OF 31
PROJECT NO. 2009016.04

P:\Siteengin\2009016.04\Dwg\ 2009016_04-sd (3-4).dwg, Sheet - (2), 9/10/2013 10:10:53 AM, Duc Tran

Hydrograph Report

1

Hydraflow Hydrographs Extension for AutoCAD® Civil 3D® 2008 by Autodesk, Inc. v6.052 — Monday, Jul 1, 2013

Hyd. No. 2

Detention

Hydrograph type	= Reservoir	Peak discharge	= 31.53 cfs
Storm frequency	= 100 yrs	Time to peak	= 23 min
Time interval	= 1 min	Hyd. volume	= 57,732 cuft
Inflow hyd. No.	= 1 - Post Developement	Max. Elevation	= 701.03 ft
Reservoir name	= Detention	Max. Storage	= 27,468 cuft

Storage Indication method used.

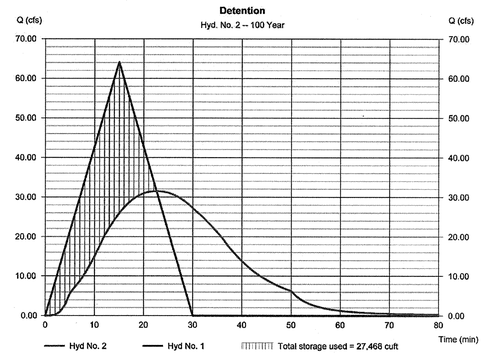

Pond Report

2

Hydraflow Hydrographs Extension for AutoCAD® Civil 3D® 2008 by Autodesk, Inc. v6.052 — Monday, Jul 1, 2013

Pond No. 1 - Detention

Pond Data

Contours - User-defined contour areas. Conic method used for volume calculation. Begining Elevation = 698.00 ft

Stage / Storage Table

Stage (ft)	Elevation (ft)	Contour area (sqft)	Incr. Storage (cuft)	Total storage (cuft)
0.00	698.00	223	0	0
1.00	699.00	7,485	3,000	3,000
2.00	700.00	12,730	9,995	12,995
3.00	701.00	15,264	13,981	26,975
4.00	702.00	17,840	16,534	43,509
5.00	703.00	20,533	19,169	62,678
6.00	704.00	23,351	21,925	84,602

Culvert / Orifice Structures

	[A]	[B]	[C]	[PrfRsr]
Rise (in)	= 30.00	0.00	0.00	0.00
Span (in)	= 30.00	0.00	0.00	0.00
No. Barrels	= 1	0	0	0
Invert El. (ft)	= 698.00	0.00	0.00	0.00
Length (ft)	= 37.80	0.00	0.00	0.00
Slope (%)	= 4.64	0.00	0.00	n/a
N-Value	= .013	.013	.013	n/a
Orifice Coeff.	= 0.60	0.60	0.60	0.60
Multi-Stage	= n/a	No	No	No

Weir Structures

	[A]	[B]	[C]	[D]
Crest Len (ft)	= 0.00	0.00	0.00	0.00
Crest El. (ft)	= 0.00	0.00	0.00	0.00
Weir Coeff.	= 3.33	3.33	3.33	3.33
Weir Type	= ---	---	---	---
Multi-Stage	= No	No	No	No

Note: Culvert/Orifice outflows are analyzed under inlet (ic) and outlet (oc) control. Weir risers checked for orifice conditions (ic) and submergence (s).

Stage / Storage / Discharge Table

Stage ft	Storage cuft	Elevation ft	Clv A cfs	Clv B cfs	Clv C cfs	PrfRsr cfs	Wr A cfs	Wr B cfs	Wr C cfs	Wr D cfs	Exfil cfs	User cfs	Total cfs
0.00	0	698.00	0.00	---	---	---	---	---	---	---	---	---	0.000
1.00	3,000	699.00	6.25 ic	---	---	---	---	---	---	---	---	---	6.246
2.00	12,995	700.00	20.28 ic	---	---	---	---	---	---	---	---	---	20.28
3.00	26,975	701.00	31.26 ic	---	---	---	---	---	---	---	---	---	31.26
4.00	43,509	702.00	39.19 ic	---	---	---	---	---	---	---	---	---	39.19
5.00	62,678	703.00	45.76 ic	---	---	---	---	---	---	---	---	---	45.76
6.00	84,602	704.00	51.51 ic	---	---	---	---	---	---	---	---	---	51.51

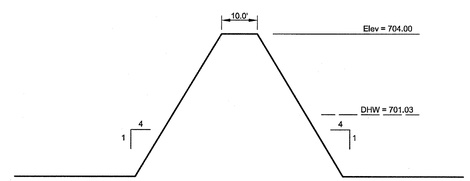

SECTION "A-A"
NTS

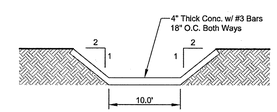

SECTION "B-B"
NTS

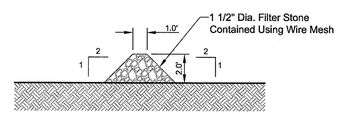

SECTION "C-C"
NTS

Note: Rock Filter to Remain in Pond After Final Stabilization.

BENCHMARKS

TBM #1= Centerline of existing sanitary manhole at the centerline intersection of Appaloosa Lane and Equine Lane located in "The Carter Ranch Phase IIA". Elevation = 687.57 feet

TBM #2 = "X" Found in concrete at the centerline intersection of Equine Lane and Old Stables Drive located in "The Carter Ranch Phase IIA". Elevation =728.63 feet

CM #5 = Concrete monument with 5/8 inch iron rod with cap stamped "Huitt-Zollars" at the Southeast corner of the intersection of State Highway 289 and County Road 88, located approximately 45' feet South of the centerline of County Road 88 and 112' feet East of the centerline of State Highway 289 Elevation = 681.76 feet

Notes:
1. Detention Pond To Be Constructed Per TCEQ Requirements.
2. JRB Engineering, LLC Recommends A Clay Material (CH) With A Liquid Limit (LL) Greater Than 50 And A plasticity Index (PI) Greater Than Or Equal To 35. The Soil Should Be From Organics And Contain No Rock Fragments Greater Than 4" In Diameter. (Based On JRB Report #12-15659, Dated 12/26/12)

GRAPHIC SCALE

20 0 10 20 40 80

(IN FEET)
1 inch = 20 ft.

RECORD DRAWING

ALL INFORMATION SHOWN ON THESE PLANS WAS FURNISHED BY THE CONTRACTOR ALL RESPONSIBILITY FOR THE ACCURACY BELONGS TO THE CONTRACTOR.

James Gardella
USA PROFESSIONAL SERVICES GROUP, INC.
DATE: June 16, 2014

REV	DESCRIPTION	DATE

THE CARTER RANCH - PHASE VB
CITY OF CELINA, COLLIN COUNTY, TEXAS
DETENTION CALCULATIONS

19 FM LTD.
1221 North Interstate 35, Suite 200
Carrollton, Texas 75006
Phone (469) 892-7200 Fax (469) 892-7201

STATE OF TEXAS
JAMES SCOTT YOUNG
69031
REGISTERED PROFESSIONAL ENGINEER
6/12/13

USA PROFESSIONAL SERVICES GROUP, INC.
TEXAS BOARD OF PROFESSIONAL ENGINEERS REGISTERED ENGINEERING FIRM F-1945
CIVIL ENGINEERS • SURVEYORS
PLANNERS • LANDSCAPE ARCHITECTS
1525 VICEROY DRIVE
DALLAS, TEXAS 75235
(214) 634-3300 FAX (214) 634-3338

DATE: SEPTEMBER 2013
SCALE: 1" = 20'H
SHEET: 14 OF 31
PROJECT NO. 2009016.04

P:\Sdksergin\2009016.04\Dwg\ 2009016_04-Detention Calcs.dwg, Detention, 8/10/2013 10:18:25 AM, Duc-Tran

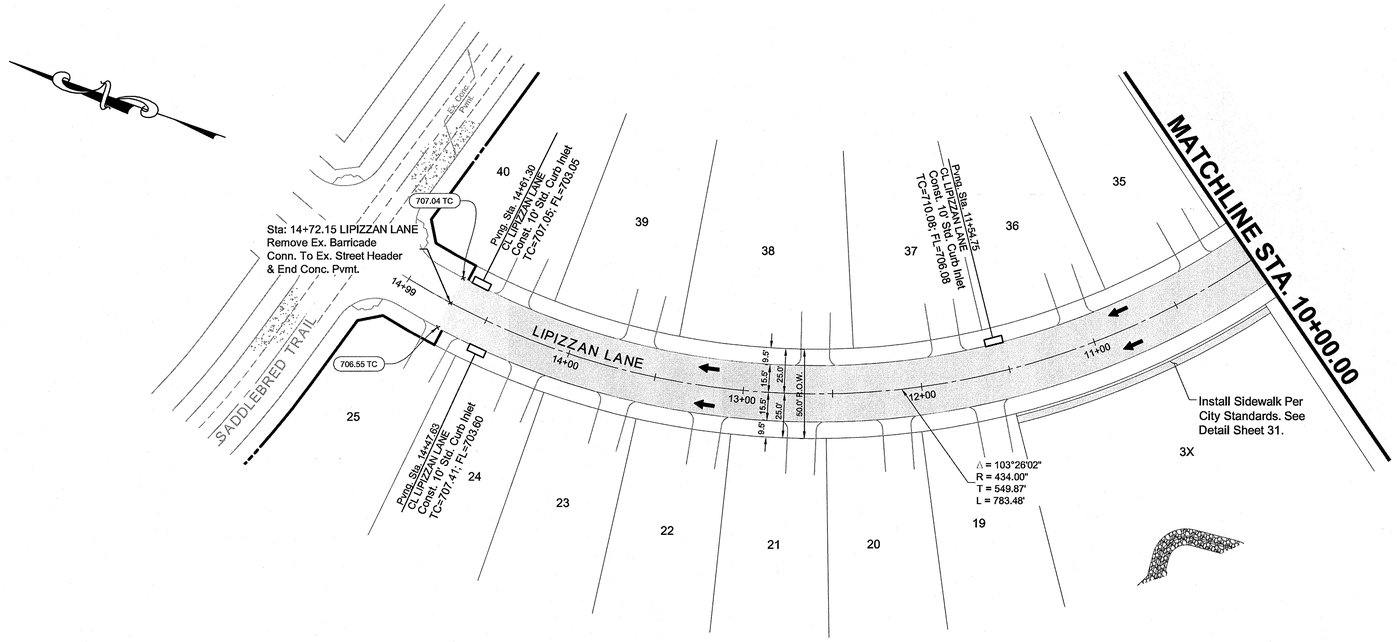

LIPIZZAN LANE

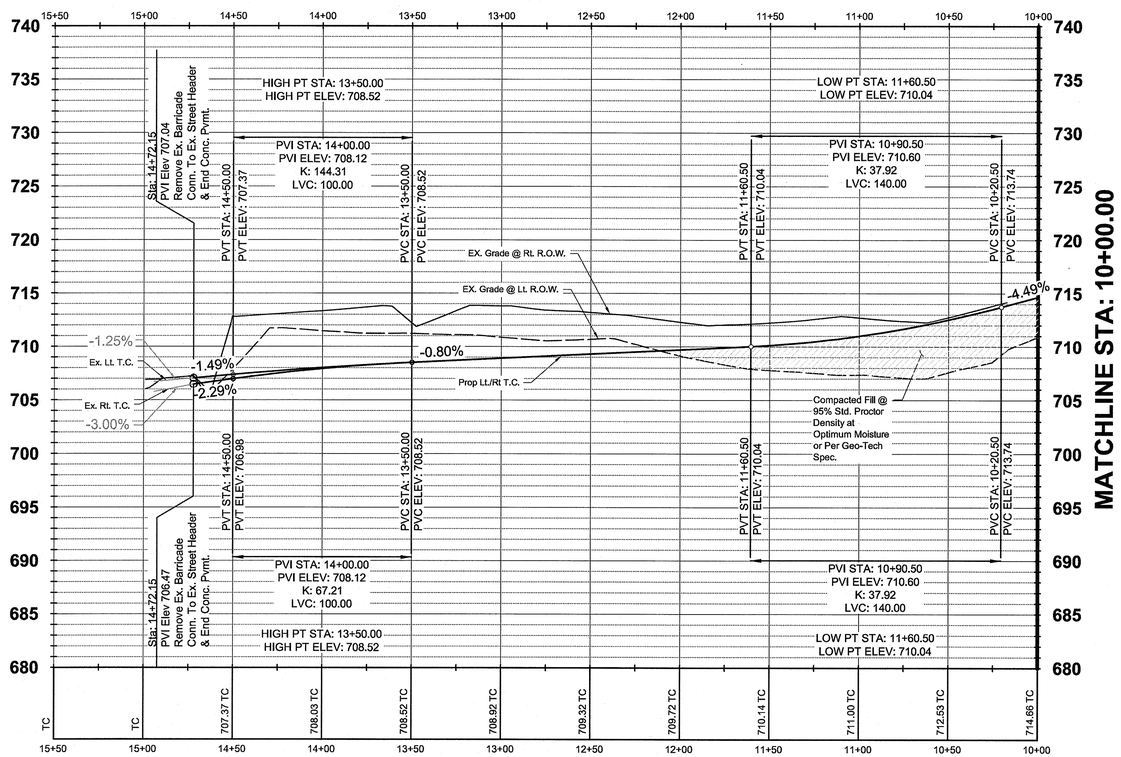

GRAPHIC SCALE

40 0 20 40 80 160

(IN FEET)
1 inch = 40 ft.

BENCHMARKS

TBM #1= Centerline of existing sanitary manhole at the centerline intersection of Appaloosa Lane and Equine Lane located in "The Carter Ranch Phase IIA". Elevation = 687.57 feet

TBM #2 = "X" Found in concrete at the centerline intersection of Equine Lane and Old Stables Drive located in "The Carter Ranch Phase IIA". Elevation =728.63 feet

CM #5 = Concrete monument with 5/8 inch iron rod with cap stamped "Huitt-Zollars" at the Southeast corner of the intersection of State Highway 289 and County Road 88, located approximately 45' feet South of the centerline of County Road 88 and 112' feet East of the centerline of State Highway 289 Elevation = 681.76 feet

LEGEND	
C.R.	Curb Return
P.I.	Point Of Intersection
Sta.	Station
Pvmt.	Pavement
Elev.	Elevation
Rt.	Right
Lt.	Left
T.C.	Top Of Curb

RECORD DRAWING

ALL INFORMATION SHOWN ON THESE PLANS WAS FURNISHED BY THE CONTRACTOR ALL RESPONSIBILITY FOR THE ACCURACY BELONGS TO THE CONTRACTOR.

James Gardella
USA PROFESSIONAL SERVICES GROUP, INC.
DATE: June 16, 2014

NOTE:
SEE SHEET 2 FOR GENERAL NOTES
SEE SHEET 31 FOR DETAILS

REV	DESCRIPTION	DATE

THE CARTER RANCH - PHASE VB
CITY OF CELINA, COLLIN COUNTY, TEXAS

19 FM LTD.
1221 North Interstate 35, Suite 200
Carrollton, Texas 75006
Phone (469) 892-7200 Fax (469) 892-7201

PAVING PLAN & PROFILE
LIPIZZAN LANE STA: 10+00.00 - STA: 14+72.71

STATE OF TEXAS
JAMES SCOTT YOUNG
69031
REGISTERED
PROFESSIONAL ENGINEER
6/12/13

USA PROFESSIONAL SERVICES GROUP, INC.
TEXAS BOARD OF PROFESSIONAL ENGINEERS
REGISTERED ENGINEERING FIRM F-1845
CIVIL ENGINEERS • SURVEYORS
PLANNERS • LANDSCAPE ARCHITECTS
1525 VICEROY DRIVE
DALLAS, TEXAS 75235
(214) 634-3300 FAX (214) 634-3338

DATE: SEPTEMBER 2013
SCALE: 1" = 40'H 1" = 6'V
SHEET: 15 OF 31
PROJECT NO. 2009016.04

P:\Siteengr\2009\016.04\Dwg\2009016_04-pv (1).dwg, Sheet: (1), 9/10/2013 10:19:22 AM, Doc Tran

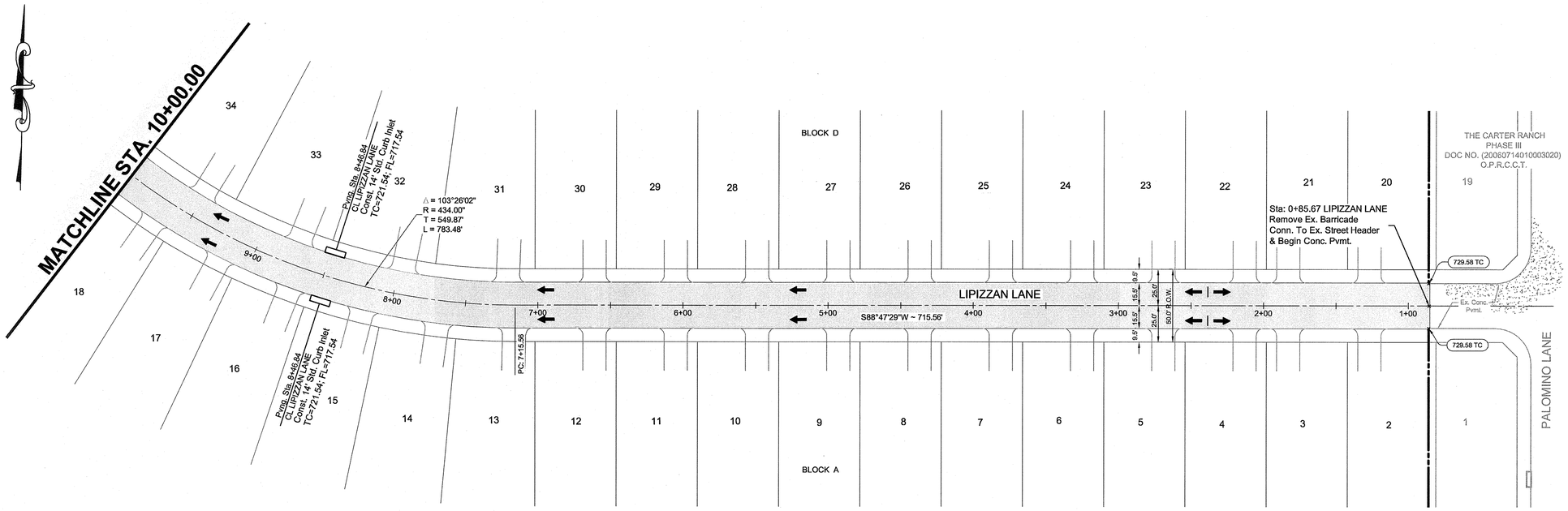

LIPIZZAN LANE

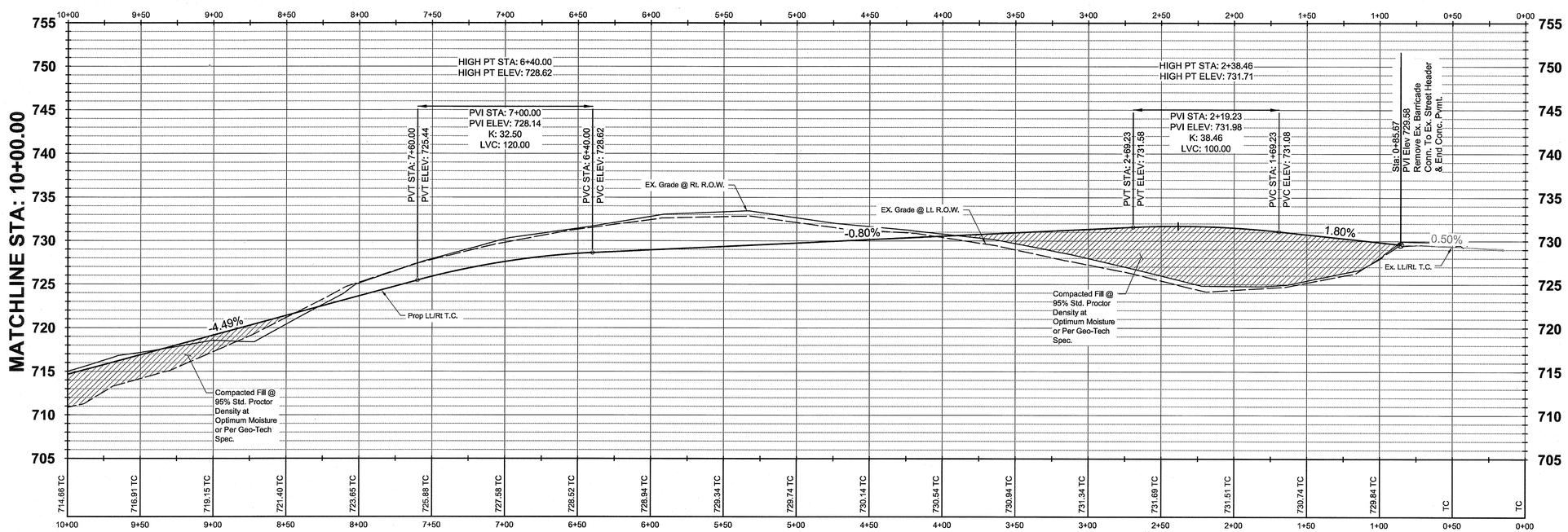

BENCHMARKS

TBM #1= Centerline of existing sanitary manhole at the centerline intersection of Appaloosa Lane and Equine Lane located in "The Carter Ranch Phase IIA". Elevation = 687.57 feet

TBM #2 = "X" Found in concrete at the centerline intersection of Equine Lane and Old Stables Drive located in "The Carter Ranch Phase IIA". Elevation =728.63 feet

CM #5 = Concrete monument with 5/8 inch iron rod with cap stamped "Huitt-Zollars" at the Southeast corner of the intersection of State Highway 289 and County Road 88, located approximately 45' feet South of the centerline of County Road 88 and 112' feet East of the centerline of State Highway 289 Elevation = 681.76 feet

GRAPHIC SCALE

40 0 20 40 80 160

(IN FEET)
1 inch = 40 ft.

LEGEND	
C.R.	Curb Return
P.I.	Point Of Intersection
Sta.	Station
Pvmt.	Pavement
Elev.	Elevation
Rt.	Right
Lt.	Left
T.C.	Top Of Curb

RECORD DRAWING

ALL INFORMATION SHOWN ON THESE PLANS WAS FURNISHED BY THE CONTRACTOR ALL RESPONSIBILITY FOR THE ACCURACY BELONGS TO THE CONTRACTOR.

James Gardella
USA PROFESSIONAL SERVICES GROUP, INC.
DATE: June 16, 2014

NOTE:
SEE SHEET 2 FOR GENERAL NOTES
SEE SHEET 31 FOR DETAILS

REV	DESCRIPTION	DATE

THE CARTER RANCH - PHASE VB
CITY OF CELINA, COLLIN COUNTY, TEXAS

19 FM LTD.
1221 North Interstate 35, Suite 200
Carrollton, Texas 75006
Phone (469) 892-7200 Fax (469) 892-7201

PAVING PLAN & PROFILE
LIPIZZAN LANE - STA: 0+85.67 - STA: 10+00.00

6/17/13

STATE OF TEXAS
JAMES SCOTT YOUNG
69031
REGISTERED
PROFESSIONAL ENGINEER

USA PROFESSIONAL SERVICES GROUP, INC.
TEXAS BOARD OF PROFESSIONAL ENGINEERS REGISTERED ENGINEERING FIRM F-1845
CIVIL ENGINEERS • SURVEYORS
PLANNERS • LANDSCAPE ARCHITECTS
1525 VICEROY DRIVE
DALLAS, TEXAS 75235
(214) 634-3300 FAX (214) 634-3338

DATE: SEPTEMBER 2013
SCALE: 1" = 40'H 1" = 6'V
SHEET: 16 OF 31
PROJECT NO. 2009016.04

P:\Sdskengn\2009016.04\Dwg\2009016_04-pvt (1).dwg, Sheet - (2), 9/10/2013 10:20:49 AM, Duc Tran

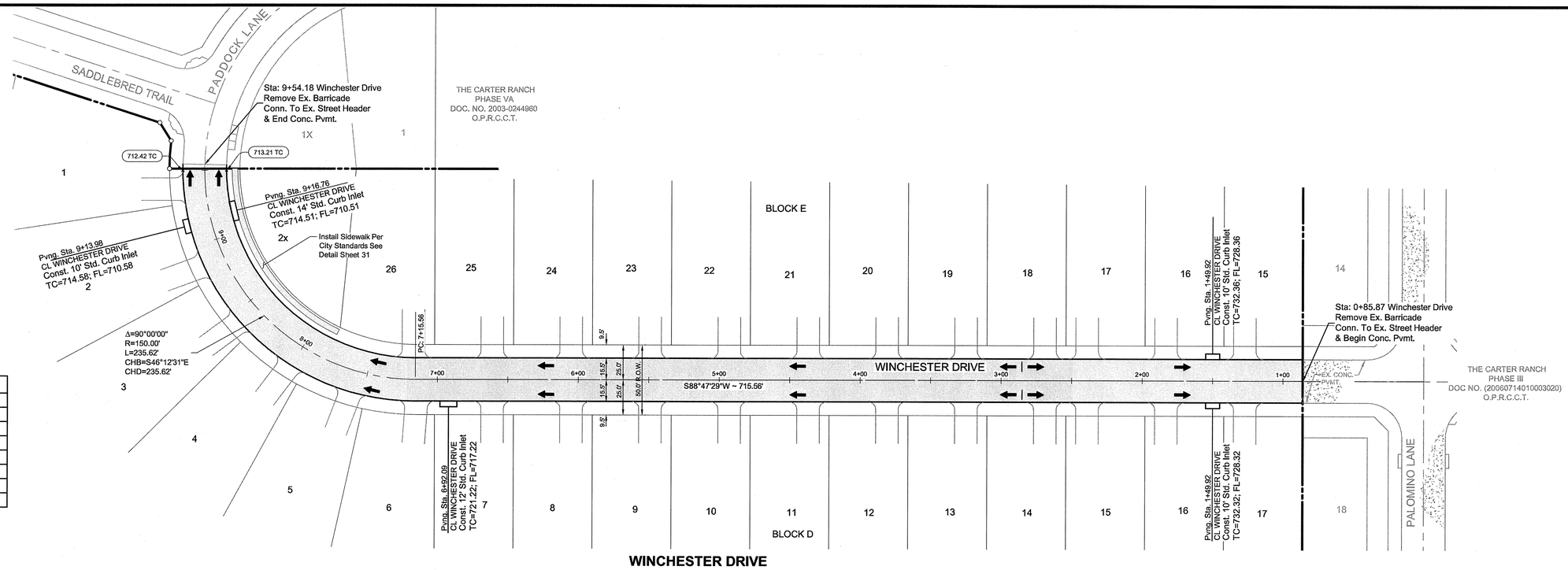

WINCHESTER DRIVE

LEGEND	
C.R.	Curb Return
P.I.	Point Of Intersection
Sta.	Station
Pvmt.	Pavement
Elev.	Elevation
Rt.	Right
Lt.	Left
T.C.	Top Of Curb

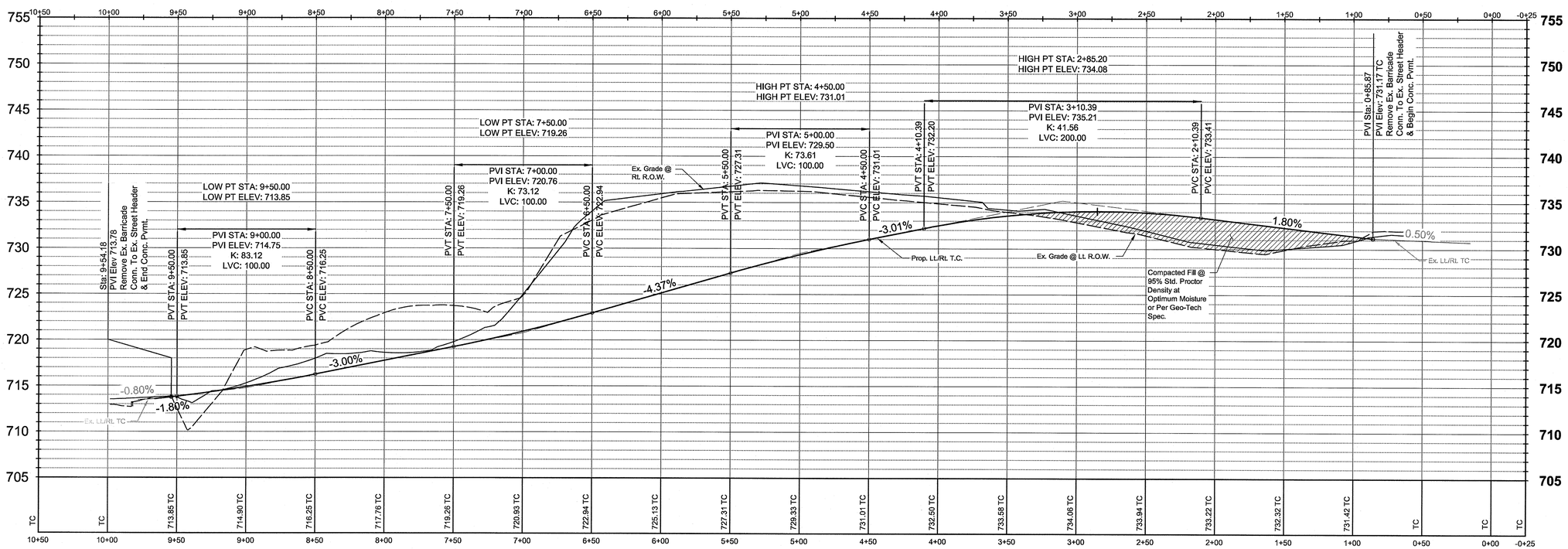

BENCHMARKS

TBM #1= Centerline of existing sanitary manhole at the centerline intersection of Appaloosa Lane and Equine Lane located in "The Carter Ranch Phase IIA". Elevation = 687.57 feet

TBM #2 = "X" Found in concrete at the centerline intersection of Equine Lane and Old Stables Drive located in "The Carter Ranch Phase IIA". Elevation =728.63 feet

CM #5 = Concrete monument with 5/8 inch iron rod with cap stamped "Huitt-Zollars" at the Southeast corner of the intersection of State Highway 289 and County Road 88, located approximately 45' feet South of the centerline of County Road 88 and 112' feet East of the centerline of State Highway 289 Elevation = 681.76 feet

GRAPHIC SCALE

40 0 20 40 80 160

(IN FEET)
1 inch = 40 ft.

RECORD DRAWING

ALL INFORMATION SHOWN ON THESE PLANS WAS FURNISHED BY THE CONTRACTOR ALL RESPONSIBILITY FOR THE ACCURACY BELONGS TO THE CONTRACTOR.

James Gardella
USA PROFESSIONAL SERVICES GROUP, INC.
DATE: June 16, 2014

NOTE:
SEE SHEET 2 FOR GENERAL NOTES
SEE SHEET 31 FOR DETAILS

REV	DESCRIPTION	DATE

THE CARTER RANCH - PHASE VB
CITY OF CELINA, COLLIN COUNTY, TEXAS

PAVING PLAN & PROFILE:
WINCHESTER DRIVE - STA: 0+85.87 - STA: 9+54.18

19 FM LTD.
1221 North Interstate 35, Suite 200
Carrollton, Texas 75006
Phone (469) 892-7200 Fax (469) 892-7201

STATE OF TEXAS
JAMES SCOTT YOUNG
69031
REGISTERED PROFESSIONAL ENGINEER
9/12/13

USA PROFESSIONAL SERVICES GROUP, INC.
TEXAS BOARD OF PROFESSIONAL ENGINEERS
REGISTERED ENGINEERING FIRM F-1945
CIVIL ENGINEERS • SURVEYORS
PLANNERS • LANDSCAPE ARCHITECTS
1525 VICEROY DRIVE
DALLAS, TEXAS 75235
(214) 634-3300 FAX (214) 634-3338

DATE: SEPTEMBER 2013
SCALE: 1" = 40'H 1" = 6'V
SHEET: 17 OF 31
PROJECT NO. 2009016.04

P:\Sskemgn\2009016.04\Dwgs\2009016_04-pv (2).dwg, Sheet - (1), 9/10/2013 10:29:33 AM, Duc Tran

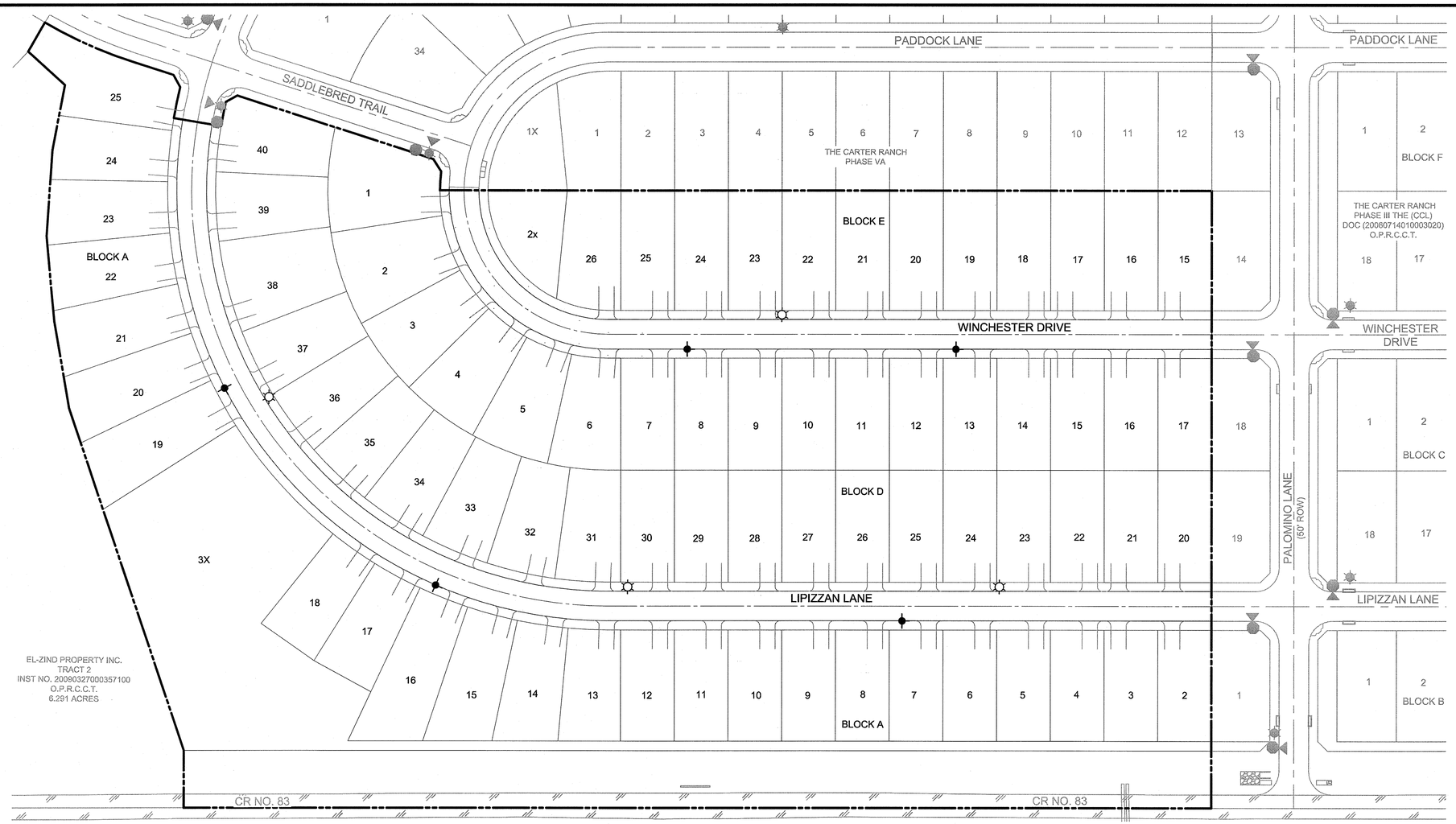

RECORD DRAWING

ALL INFORMATION SHOWN ON THESE PLANS WAS FURNISHED BY THE CONTRACTOR ALL RESPONSIBILITY FOR THE ACCURACY BELONGS TO THE CONTRACTOR.

James Gardella
USA PROFESSIONAL SERVICES GROUP, INC.
DATE: June 16, 2014

SIGNS & STREET LIGHT TABLE

SYMBOL	DESRIPTION	QTY.
	PROPOSED STREET LIGHT (SEE NOTE 5 BELOW)	4
	EXISTING STREET LIGHT	5
STOP	STOP SIGN	0
	EXISTING STOP SIGN	7
	STREET NAME (SEE NOTE 5 BELOW)	0
	EXISTING STREET SIGN	5

NOTES:

1. ILLUMINATION CONSTRUCTION TO BE COORDINATED WITH FEC/TXU ELECTRIC DELIVERY (BRIAN GREEN), PRIOR TO CONSTRUCTION.

2. LIGHT SOURCE HPS LAMP SIZE AND WATT IS 200 AND MOUNTING HEIGHT IS 32'.

3. AVERAGE ILLUMINATION INTENSITY IS 0.6 TO 0.9 FOOT CANDLES.

4. WHERE LIGHT POLE IS LOCATED MID BLOCK, IT SHALL BE PLACED ON PROPERTY LINE TO AVOID INTERFERENCE WITH POTENTIAL DRIVEWAY LOCATION.

5. WHERE LIGHT POLE AND STOP SIGN ARE PROPOSED ON THE SAME CORNER, STOP SIGNS AND STREET SIGNS SHALL BE MOUNTED TO LIGHT POLE.

6. IF THERE IS A AMENITY CENTER LIGHTING PLAN IT WILL BE DESIGNED BY OTHERS.

BENCHMARKS

TBM #1= Centerline of existing sanitary manhole at the centerline intersection of Appaloosa Lane and Equine Lane located in "The Carter Ranch Phase IIA". Elevation = 687.57 feet

TBM #2 = "X" Found in concrete at the centerline intersection of Equine Lane and Old Stables Drive located in "The Carter Ranch Phase IIA". Elevation =728.63 feet

CM #5 = Concrete monument with 5/8 inch iron rod with cap stamped "Huitt-Zollars" at the Southeast corner of the intersection of State Highway 289 and County Road 88, located approximately 45' feet South of the centerline of County Road 88 and 112' feet East of the centerline of State Highway 289 Elevation = 681.76 feet

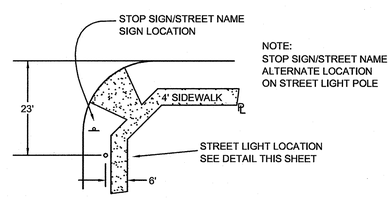

NOTE:
STOP SIGN/STREET NAME ALTERNATE LOCATION ON STREET LIGHT POLE

TYPICAL LAYOUT

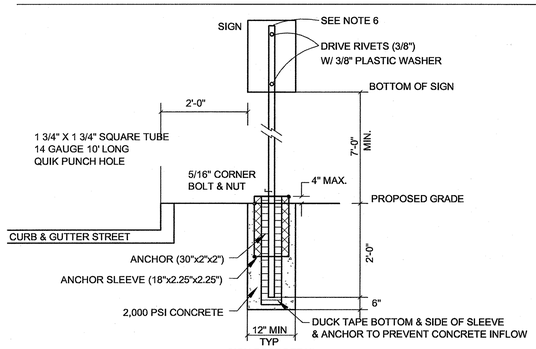

SIGN POST DETAIL
NTS

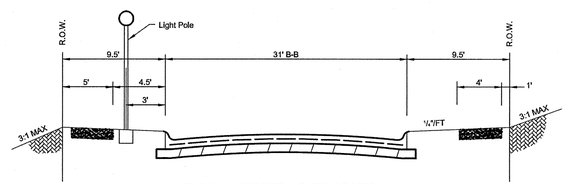

TYPICAL STREET LIGHT LOCATION
N.T.S.

Celina Street Sign Example

Street Name: 9" initial uppercase letter followed by 4.5" lowercase letters
Must meet 2009 (or latest) MUTCD requirements
9" flat blank, high intensity prismatic.

Front:
(Left to Right)

Back:
(Left to Right)

STREET NAME BLADE SPECIFICATION

Location:
- 9" flat blades shall be used at all intersections within the interior of the subdivision.
- 9" extruded blades shall be used at intersections where a subdivision roadway intersects a roadway designated as a major or minor thoroughfare and at all other intersections along major and minor thoroughfares.

Blade Requirements:
- 9" Flat Blade shall be aluminum and have a thickness of 0.08 inches.
- 9" Extruded Blade shall be aluminum.

Lettering Alignment:
- Street name is left justified - Block numbers are located upper right corner.
- Abbreviated street designations are located in lower right corner.

Lettering for 9" Extruded Blades:
- Letters are all Uppercase. - Font is Federal Highway SERIES B or Series C (manufacturer will determine best to use based on length of blade and length of name).
- Letters and Numbers in street name are 6" tall.
- Letters in abbreviated street designation are 3" tall (i.e., LN, PKWY, DR, CT, etc).
- Block Numbers are 3" tall.

Sign Sheeting and Colors:
- High Intensity Sheeting.
- Background shall be green.
- Legend shall be white.

No Outlet Streets:
- The letters "NO OUTLET" shall be black uppercase letters on a yellow background.
- The word "NO" shall be centered over the word "OUTLET".
- On 9" flat blades, the font is Federal Highway SERIES B with 1.5" letters.
- On 9" extruded blades, the font is Federal Highway SERIES B with 2.5" letters.
- An arrow pointing in the direction of the no outlet locations shall be below the words "NO OUTLET".
- For a street with only one cul-de-sac end (typical), one side of the blade shall have "NO OUTLET" on the right with the arrow pointing to the right while the opposing side of the blade shall have the "NO OUTLET" on the left with the arrow pointing to the left.
- In the case of a street with two cul-de-sac ends, each side of the blade shall have the words "NO OUTLET" on the right with an arrow pointing to the right and the words "NO OUTLET" on the left with an arrow pointing to the left.

GRAPHIC SCALE

60 0 30 60 120 240

(IN FEET)
1 inch = 60 ft.

REV	DESCRIPTION	DATE

THE CARTER RANCH - PHASE VB
CITY OF CELINA, COLLIN COUNTY, TEXAS
STREET LIGHT PLAN

19 FM LTD.
1221 North Interstate 35, Suite 200
Carrollton, Texas 75006
Phone (469) 892-7200 Fax (469) 892-7201

6/12/13

STATE OF TEXAS
JAMES SCOTT YOUNG
69031
REGISTERED PROFESSIONAL ENGINEER

USA PROFESSIONAL SERVICES GROUP, INC.
TEXAS BOARD OF PROFESSIONAL ENGINEERS REGISTERED ENGINEERING FIRM F-1845
CIVIL ENGINEERS • SURVEYORS
PLANNERS • LANDSCAPE ARCHITECTS
1525 VICEROY DRIVE
DALLAS, TEXAS 75235
(214) 634-3300 FAX (214) 634-3338

DATE: SEPTEMBER 2013
SCALE: 1" = 60'H
SHEET: 18 OF 31
PROJECT NO. 2009016.04

P:\Sitework\2009016.04\Dwg\2009016_04-StreetSign.dwg 9/10/2013 10:34:22 AM, Duc Tran

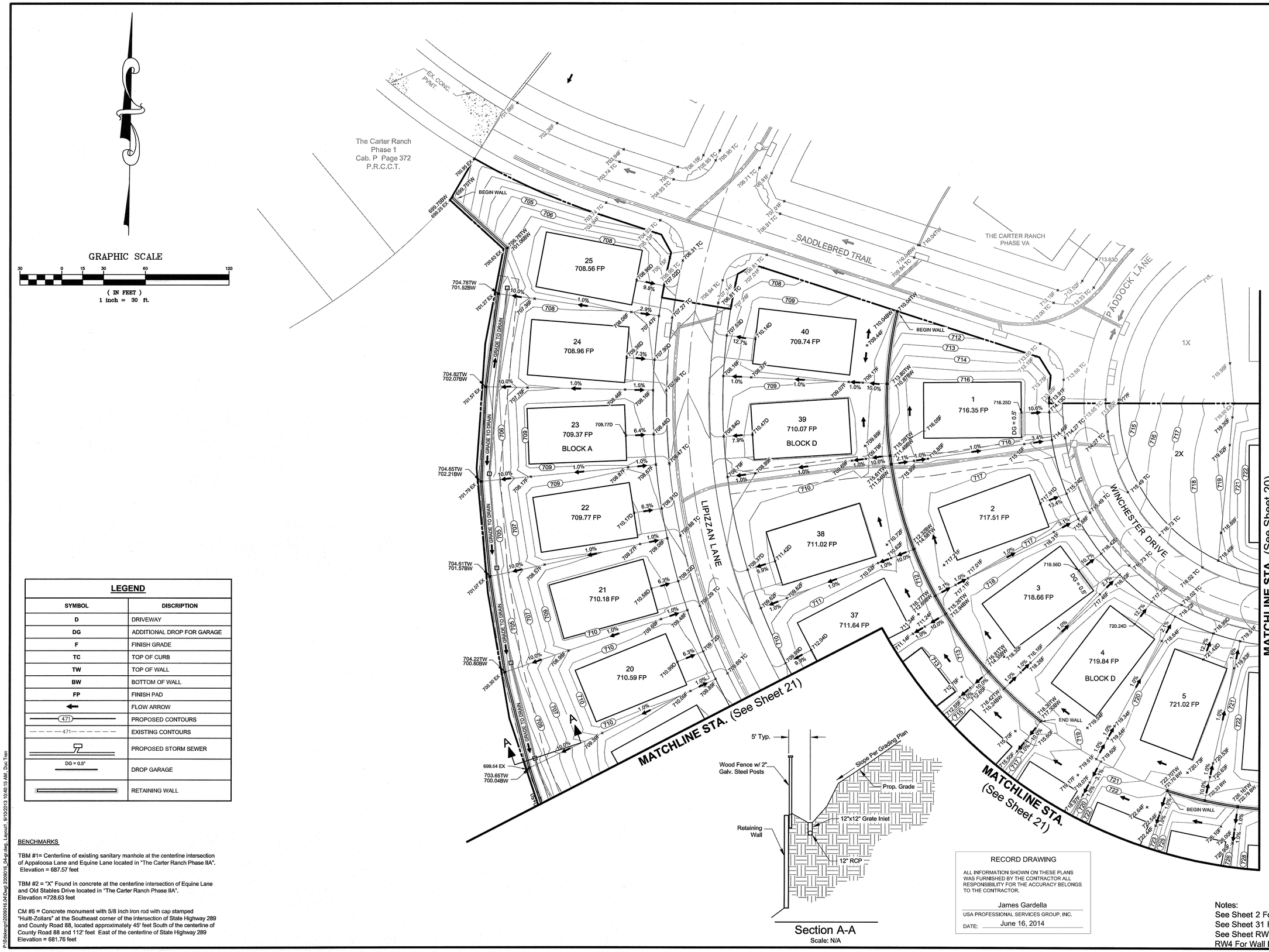

LEGEND

SYMBOL	DISCRIPTION
D	DRIVEWAY
DG	ADDITIONAL DROP FOR GARAGE
F	FINISH GRADE
TC	TOP OF CURB
TW	TOP OF WALL
BW	BOTTOM OF WALL
FP	FINISH PAD
←	FLOW ARROW
471	PROPOSED CONTOURS
471	EXISTING CONTOURS
	PROPOSED STORM SEWER
DG = 0.5"	DROP GARAGE
	RETAINING WALL

BENCHMARKS

TBM #1= Centerline of existing sanitary manhole at the centerline intersection of Appaloosa Lane and Equine Lane located in "The Carter Ranch Phase IIA". Elevation = 687.57 feet

TBM #2 = "X" Found in concrete at the centerline intersection of Equine Lane and Old Stables Drive located in "The Carter Ranch Phase IIA". Elevation =728.63 feet

CM #5 = Concrete monument with 5/8 inch iron rod with cap stamped "Huitt-Zollars" at the Southeast corner of the intersection of State Highway 289 and County Road 88, located approximately 45' feet South of the centerline of County Road 88 and 112' feet East of the centerline of State Highway 289 Elevation = 681.76 feet

RECORD DRAWING

ALL INFORMATION SHOWN ON THESE PLANS WAS FURNISHED BY THE CONTRACTOR ALL RESPONSIBILITY FOR THE ACCURACY BELONGS TO THE CONTRACTOR.

James Gardella
USA PROFESSIONAL SERVICES GROUP, INC.
DATE: June 16, 2014

Notes:
See Sheet 2 For General Notes
See Sheet 31 For Paving Details
See Sheet RW1, RW2, RW3, & RW4 For Wall Details

REV	DESCRIPTION	DATE

THE CARTER RANCH - PHASE VB
CITY OF CELINA, COLLIN COUNTY, TEXAS

GRADING PLAN

19 FM LTD.
1221 North Interstate 35, Suite 200
Carrollton, Texas 75006
Phone (469) 892-7200 Fax (469) 892-7201

STATE OF TEXAS
JAMES SCOTT YOUNG
69031
REGISTERED PROFESSIONAL ENGINEER
9/12/13

USA PROFESSIONAL SERVICES GROUP, INC.
TEXAS BOARD OF PROFESSIONAL ENGINEERS
REGISTERED ENGINEERING FIRM F-1845
CIVIL ENGINEERS • SURVEYORS
PLANNERS • LANDSCAPE ARCHITECTS
1525 VICEROY DRIVE
DALLAS, TEXAS 75235
(214) 634-3300 FAX (214) 634-3338

DATE: SEPTEMBER 2013
SCALE: 1" = 30'H
SHEET: 19 OF 31
PROJECT NO. 2009016.04

P:\Sdskengn\2009016.04\Dwg\ 2009016_04-gr.dwg, Layout1, 9/10/2013 10:40:15 AM, Duc Tran

GRAPHIC SCALE

30 0 15 30 60 120

(IN FEET)
1 inch = 30 ft.

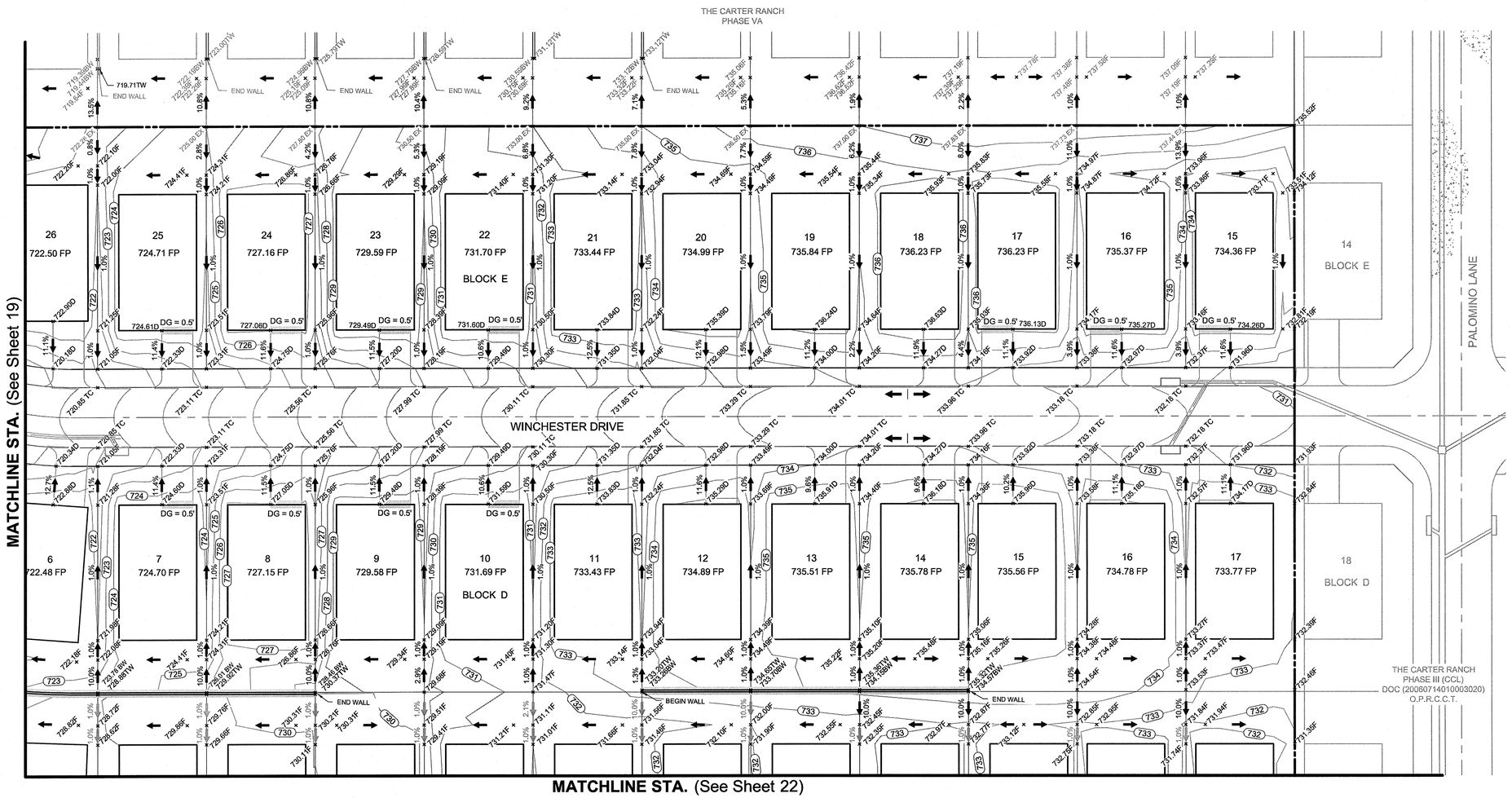

LEGEND

SYMBOL	DISCRIPTION
D	DRIVEWAY
DG	ADDITIONAL DROP FOR GARAGE
F	FINISH GRADE
TC	TOP OF CURB
TW	TOP OF WALL
BW	BOTTOM OF WALL
FP	FINISH PAD
	FLOW ARROW
471	PROPOSED CONTOURS
471	EXISTING CONTOURS
	PROPOSED STORM SEWER
DG = 0.5"	DROP GARAGE
	RETAINING WALL

BENCHMARKS

TBM #1= Centerline of existing sanitary manhole at the centerline intersection of Appaloosa Lane and Equine Lane located in "The Carter Ranch Phase IIA".
Elevation = 687.57 feet

TBM #2 = "X" Found in concrete at the centerline intersection of Equine Lane and Old Stables Drive located in "The Carter Ranch Phase IIA".
Elevation =728.63 feet

CM #5 = Concrete monument with 5/8 inch iron rod with cap stamped "Huitt-Zollars" at the Southeast corner of the intersection of State Highway 289 and County Road 88, located approximately 45' feet South of the centerline of County Road 88 and 112' feet East of the centerline of State Highway 289
Elevation = 681.76 feet

RECORD DRAWING

ALL INFORMATION SHOWN ON THESE PLANS WAS FURNISHED BY THE CONTRACTOR ALL RESPONSIBILITY FOR THE ACCURACY BELONGS TO THE CONTRACTOR.

James Gardella
USA PROFESSIONAL SERVICES GROUP, INC.
DATE: June 16, 2014

Notes:
See Sheet 2 For General Notes
See Sheet 31 For Paving Details
See Sheet RW1, RW2, RW3, & RW4 For Wall Details

REV	DESCRIPTION	DATE

THE CARTER RANCH - PHASE VB
CITY OF CELINA, COLLIN COUNTY, TEXAS

GRADING PLAN

19 FM LTD.
1221 North Interstate 35, Suite 200
Carrollton, Texas 75006
Phone (469) 892-7200 Fax (469) 892-7201

STATE OF TEXAS
JAMES SCOTT YOUNG
69031
REGISTERED PROFESSIONAL ENGINEER

USA PROFESSIONAL SERVICES GROUP, INC.
TEXAS BOARD OF PROFESSIONAL ENGINEERS REGISTERED ENGINEERING FIRM F-1845
CIVIL ENGINEERS • SURVEYORS
PLANNERS • LANDSCAPE ARCHITECTS
1525 VICEROY DRIVE
DALLAS, TEXAS 75235
(214) 634-3300 FAX (214) 634-3338

DATE: SEPTEMBER 2013
SCALE: 1" = 30'H
SHEET: 20 OF 31
PROJECT NO. 2009016.04

P:\Sdkengin\2009016.04\Dwg\2009016_04-gr.dwg , Layout2, 9/10/2013 10:43:48 AM, Duc Tran

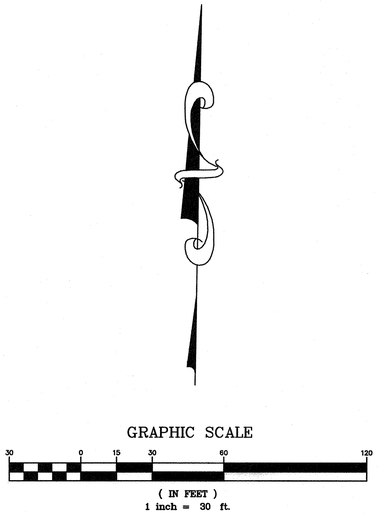

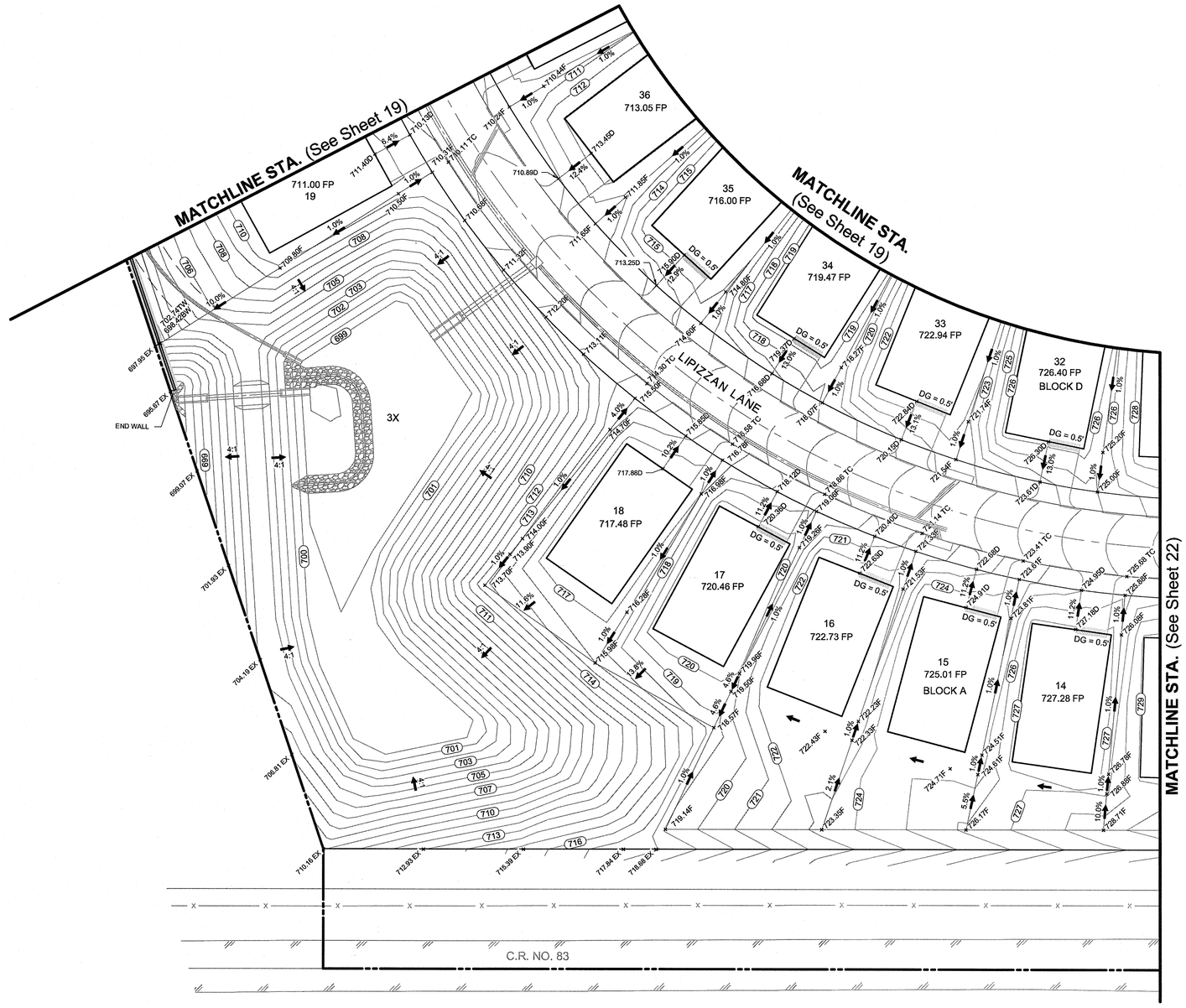

LEGEND

SYMBOL	DISCRIPTION
D	DRIVEWAY
DG	ADDITIONAL DROP FOR GARAGE
F	FINISH GRADE
TC	TOP OF CURB
TW	TOP OF WALL
BW	BOTTOM OF WALL
FP	FINISH PAD
←	FLOW ARROW
471	PROPOSED CONTOURS
471	EXISTING CONTOURS
	PROPOSED STORM SEWER
DG = 0.5"	DROP GARAGE
	RETAINING WALL

BENCHMARKS

TBM #1= Centerline of existing sanitary manhole at the centerline intersection of Appaloosa Lane and Equine Lane located in "The Carter Ranch Phase IIA". Elevation = 687.57 feet

TBM #2 = "X" Found in concrete at the centerline intersection of Equine Lane and Old Stables Drive located in "The Carter Ranch Phase IIA". Elevation =728.63 feet

CM #5 = Concrete monument with 5/8 inch iron rod with cap stamped "Huitt-Zollars" at the Southeast corner of the intersection of State Highway 289 and County Road 88, located approximately 45' feet South of the centerline of County Road 88 and 112' feet East of the centerline of State Highway 289 Elevation = 681.76 feet

RECORD DRAWING

ALL INFORMATION SHOWN ON THESE PLANS WAS FURNISHED BY THE CONTRACTOR ALL RESPONSIBILITY FOR THE ACCURACY BELONGS TO THE CONTRACTOR.

James Gardella
USA PROFESSIONAL SERVICES GROUP, INC.
DATE: June 16, 2014

Notes:
See Sheet 2 For General Notes
See Sheet 31 For Paving Details
See Sheet RW1, RW2, RW3, & RW4 For Wall Details

REV	DESCRIPTION	DATE

THE CARTER RANCH - PHASE VB
CITY OF CELINA, COLLIN COUNTY, TEXAS

GRADING PLAN

19 FM LTD.
1221 North Interstate 35, Suite 200
Carrollton, Texas 75006
Phone (469) 892-7200 Fax (469) 892-7201

STATE OF TEXAS
JAMES SCOTT YOUNG
69031
REGISTERED PROFESSIONAL ENGINEER
9/12/13

USA PROFESSIONAL SERVICES GROUP, INC.
TEXAS BOARD OF PROFESSIONAL ENGINEERS
REGISTERED ENGINEERING FIRM F-1845
CIVIL ENGINEERS • SURVEYORS
PLANNERS • LANDSCAPE ARCHITECTS
1525 VICEROY DRIVE
DALLAS, TEXAS 75235
(214) 634-3300 FAX (214) 634-3338

DATE: SEPTEMBER 2013
SCALE: 1" = 30'H
SHEET: 21 OF 31
PROJECT NO. 2009016.04

P:\Sdskengin\2009016.04\Dwg\2009016_04-gr.dwg, Layout3, 9/10/2013 10:46:00 AM, Duc Tran

GRAPHIC SCALE

30 0 15 30 60 120

(IN FEET)
1 inch = 30 ft.

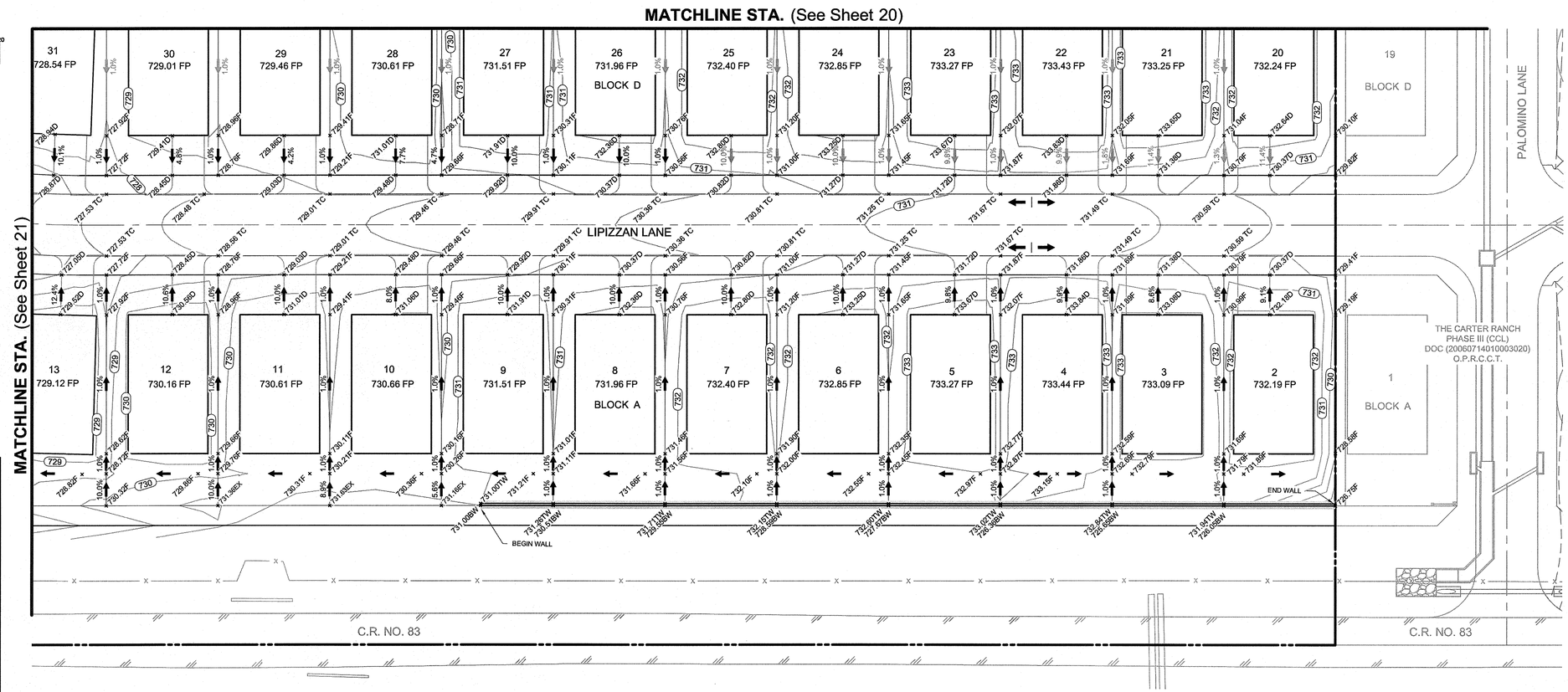

LEGEND

SYMBOL	DISCRIPTION
D	DRIVEWAY
DG	ADDITIONAL DROP FOR GARAGE
F	FINISH GRADE
TC	TOP OF CURB
TW	TOP OF WALL
BW	BOTTOM OF WALL
FP	FINISH PAD
←	FLOW ARROW
471	PROPOSED CONTOURS
471	EXISTING CONTOURS
	PROPOSED STORM SEWER
DG = 0.5"	DROP GARAGE
	RETAINING WALL

BENCHMARKS

TBM #1= Centerline of existing sanitary manhole at the centerline intersection of Appaloosa Lane and Equine Lane located in "The Carter Ranch Phase IIA". Elevation = 687.57 feet

TBM #2 = "X" Found in concrete at the centerline intersection of Equine Lane and Old Stables Drive located in "The Carter Ranch Phase IIA". Elevation =728.63 feet

CM #5 = Concrete monument with 5/8 inch iron rod with cap stamped "Huitt-Zollars" at the Southeast corner of the intersection of State Highway 289 and County Road 88, located approximately 45' feet South of the centerline of County Road 88 and 112' feet East of the centerline of State Highway 289 Elevation = 681.76 feet

RECORD DRAWING

ALL INFORMATION SHOWN ON THESE PLANS WAS FURNISHED BY THE CONTRACTOR ALL RESPONSIBILITY FOR THE ACCURACY BELONGS TO THE CONTRACTOR.

James Gardella
USA PROFESSIONAL SERVICES GROUP, INC.
DATE: June 16, 2014

Notes:
See Sheet 2 For General Notes
See Sheet 31 For Paving Details
See Sheet RW1, RW2, RW3, & RW4 For Wall Details

REV	DESCRIPTION	DATE

THE CARTER RANCH - PHASE VB
CITY OF CELINA, COLLIN COUNTY, TEXAS

GRADING PLAN

19 FM LTD.
1221 North Interstate 35, Suite 200
Carrollton, Texas 75006
Phone (469) 892-7200 Fax (469) 892-7201

STATE OF TEXAS
JAMES SCOTT YOUNG
69031
REGISTERED PROFESSIONAL ENGINEER
9/12/13

USA PROFESSIONAL SERVICES GROUP, INC.
TEXAS BOARD OF PROFESSIONAL ENGINEERS
REGISTERED ENGINEERING FIRM F-1845
CIVIL ENGINEERS • SURVEYORS
PLANNERS • LANDSCAPE ARCHITECTS
1525 VICEROY DRIVE
DALLAS, TEXAS 75235
(214) 634-3300 FAX (214) 634-3338

DATE: SEPTEMBER 2013
SCALE: 1" = 30'H
SHEET: 22 OF 31
PROJECT NO. 2009016.04

P:\Sdskengin\2009016.04\Dwg\2009016_04-gr.dwg, Layout4, 9/10/2013 10:48:41 AM, Duc Tran

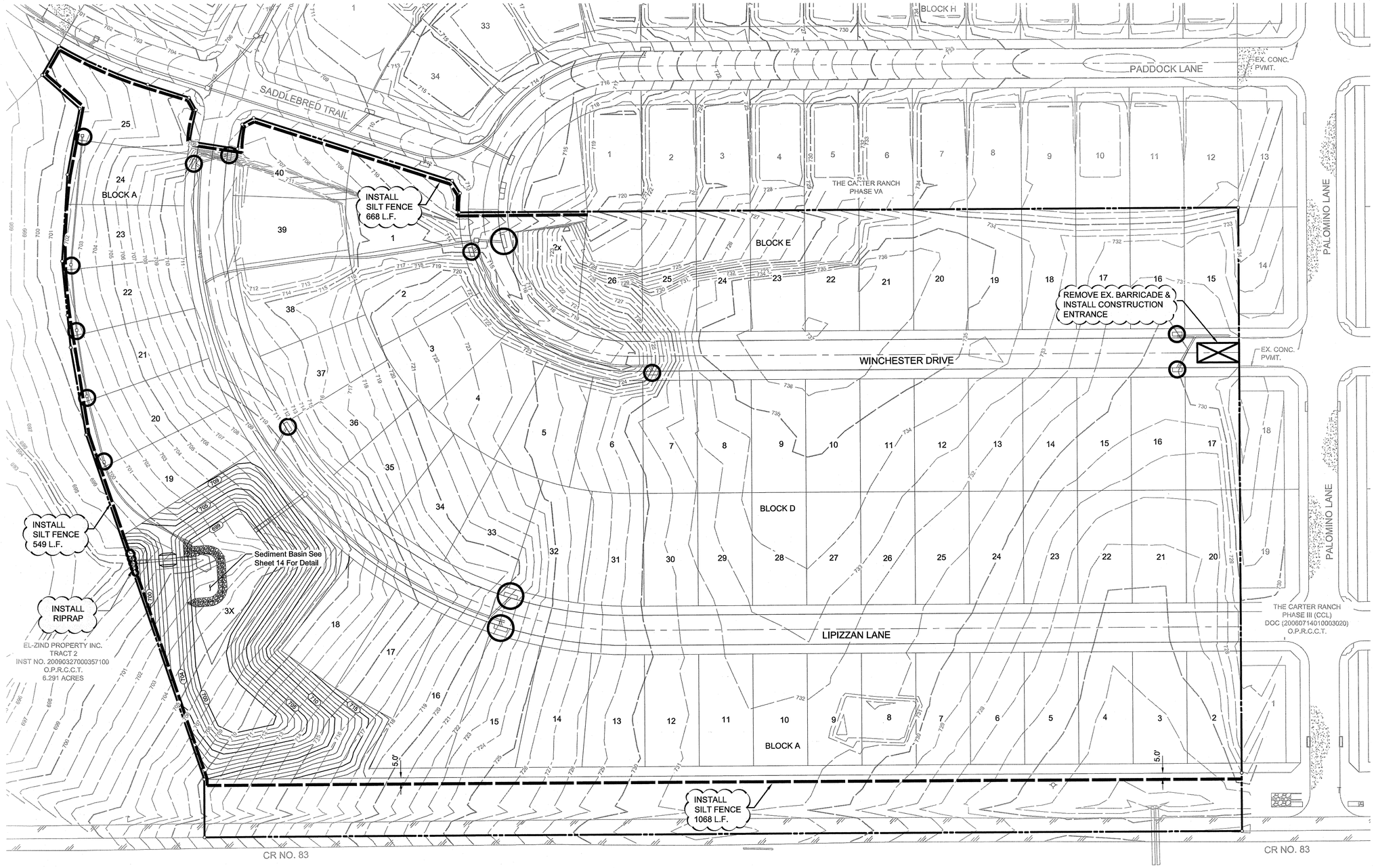

BENCHMARKS

TBM #1= Centerline of existing sanitary manhole at the centerline intersection of Appaloosa Lane and Equine Lane located in "The Carter Ranch Phase IIA". Elevation = 687.57 feet

TBM #2 = "X" Found in concrete at the centerline intersection of Equine Lane and Old Stables Drive located in "The Carter Ranch Phase IIA". Elevation =728.63 feet

CM #5 = Concrete monument with 5/8 inch iron rod with cap stamped "Huitt-Zollars" at the Southeast corner of the intersection of State Highway 289 and County Road 88, located approximately 45' feet South of the centerline of County Road 88 and 112' feet East of the centerline of State Highway 289 Elevation = 681.76 feet

GRAPHIC SCALE

50 0 25 50 100 200

(IN FEET)
1 inch = 50 ft.

LEGEND

SYMBOL	DESCRIPTION	QTY.
	INLET PROTECTION	15
	RIPRAP	1
	CONSTRUCTION ENTRANCE	1
	SILT FENCE TO BE INSTALLED WITH WELDED WIRE BACKING ON T-POSTS WITH WIRE TIES	2,543 L.F.

RECORD DRAWING

ALL INFORMATION SHOWN ON THESE PLANS WAS FURNISHED BY THE CONTRACTOR ALL RESPONSIBILITY FOR THE ACCURACY BELONGS TO THE CONTRACTOR.

James Gardella
USA PROFESSIONAL SERVICES GROUP, INC.
DATE: June 16, 2014

REV	DESCRIPTION	DATE

THE CARTER RANCH - PHASE VB
CITY OF CELINA, COLLIN COUNTY, TEXAS
EROSION CONTROL PLAN

19 FM LTD.
1221 North Interstate 35, Suite 200
Carrollton, Texas 75006
Phone (469) 892-7200 Fax (469) 892-7201

9/12/13
STATE OF TEXAS
JAMES SCOTT YOUNG
69031
REGISTERED PROFESSIONAL ENGINEER

USA PROFESSIONAL SERVICES GROUP, INC.
TEXAS BOARD OF PROFESSIONAL ENGINEERS
REGISTERED ENGINEERING FIRM F-1845
CIVIL ENGINEERS • SURVEYORS
PLANNERS • LANDSCAPE ARCHITECTS
1525 VICEROY DRIVE
DALLAS, TEXAS 75235
(214) 634-3300 FAX (214) 634-3338

DATE: SEPTEMBER 2013
SCALE: 1" = 50'H
SHEET: 23 OF 31
PROJECT NO. 2009016.04

P:\Siteengr\2009016.04\Dwg\ 2009016_04-ep.dwg, Layout1, 9/10/2013 11:00:10 AM, Duc Tran

SITE DESCRIPTION

This Storm Water Pollution Prevention Plan (SWPPP) has been prepared for site development construction activities as shown on the following pages. The intent of this plan is to control storm water discharges and certain non-storm water discharges associated with site development construction. It is anticipated the following non-storm water discharges may be associated with the construction activities. Each of the following discharges are authorized by the Construction General Permit and are specified herein and made a part of this SWPPP.

1. Waters used to wash vehicles or control dust.
2. Waterline flushings.
3. Fire Hydrant flushings.
4. Irrigation drainage.
5. Routine pavement washdowns where spills or leaks of toxic or hazardous materials have not occurred (unless all spilled material has been removed) and where detergents are not used.
6. Routine external building washdowns which do not use detergents.
7. Air conditioning condensates. 8. Foundation or footing drains where flows are not contaminated with process materials such as solvents.

If the Contractor anticipates or experiences any other non-storm water discharges, he shall contact the Engineer of Record to discuss the need for control measures and possible revisions to this SWPPP.

The runoff coefficient of the site after construction is complete is estimated as ______ per the CITY OF CELINA drainage design criteria. The soils at this site are generally , per the soils report prepared by ________________, dated __________. Storm water from this site discharges into ____________________. There are no wetland areas in the disturbed areas covered by this plan according to the U.S. Army Corps of Engineers, Fort Worth office The total site area is 17.918 acres. It is anticipated that 17.918 acres will be disturbed during the construction activities.

EROSION CONTROL GENERAL NOTES

1. Disturbed areas where construction has permanently or temporarily ceased must be stabilized within 14 days of the last disturbance. Area which will be redisturbed within 21 days need not be stabilized.
2. Erosion control measures will be actively maintained until final stabilization of the disturbed area. If erosion control measures are removed for construction or access purposes, Contractor shall replace all items at the end of each work day.
3. After installation of pavement, final lot benching and general cleanup, all disturbed areas shall be hydromulched or cultipack seeded. See seeding specifications this sheet.
4. Erosion control measures require maintenance, cleaning and replacement as required. Erosion control measures will be inspected at least once every seven days and within 24 hours of a rainfall one-half inch or greater by an Agent designated by the Operator and a written report shall be maintained.
5. Excavated trenches and utility spoils shall be backfilled or stockpiled at the end of each day.
6. Stockpiled materials shall be surrounded by silt barrier fence or hay bales per the attached details. Alternate: small stockpiled areas may be covered by a water repellent tarp or plastic as approved by the Operator.
7. Soils in parkways to be chain harrowed or chain dragged prior to seeding. After seeding, parkways to be maintained until a stand of grass has been accomplished and approved by the City.

INSTALLATION SEQUENCE

PHASE 1 (Initial Grading) Initial installation of silt fence shall be installed prior to clearing the site for establishing rough grades. Installation of silt fence and stone overflow shall be preserved by the excavation contractor. If during the course of clearing and excavation, the excavation contractor destroys or moves these facilites, then it shall be the responsibility of the excavation contractor to replace the facilities to the state in which he found them when he mobilized.

PHASE 2 (Utility Install) If required, installation of silt fence or stone overflow, as shown, shall be installed prior to the construction of any drainage facilities and after inlet bottoms are poured. It shall be the utility contractor's responsibility to preserve and/or replace any facilities previously installed during PHASE 1 if destroyed.

PHASE 3 (Paving) Curlex shall be installed after the paving contractor has backfilled all street curbs. The paving contractor shall be responsible for preserving and/or replacing any previously installed facilities which are destroyed as a result of constructing any and all paving facilities.

PHASE 4 (Final Grading) All disturbed areas shall be seeded by others after the excavation contractor has completed the final lot benching of each lot within this development.

* All proposed stormwater pollution prevention devices shall be installed by a qualified contractor and shall be paid for per a unit price contract.

OTHER NOTES

1. Solid non-hazardous construction waste shall be disposed of in trash dumpsters or approved equal, in a location approved by the operator. Potentially soluble or leachable solid waste shall be stored off the ground and in covered leak-proof containers. Solid waste shall be properly disposed of off-site on a regular basis.
2. Hazardous waste shall be segregated from non-hazardous construction site debris. Liquid or semi-liquid hazardous waste shall be stored in appropriate containers (closed drums or similar) and shall be kept under cover. Granular, soluble or leachable hazardous waste materials shall be stored off the ground and in covered leak-proof containers. Hazardous waste storage area locations shall be properly approved of by the Operator. Hazardous waste shall be properly disposed of off-site on a regular basis by a reputable, licensed hazardous waste hauler.

Note: It is not the intent of this SWPPP to supersede or replace normal site assessment and remediation procedures concerning hazardous materials. Significant spills and/or contamination warrant immediate response by trained professionals. Suspected job site contamination should be immediately reported to regulatory authorities and protective actions taken.

3. Fresh concrete waste and concrete equipment washdowns shall be contained in an area approved by the operator. Contractor shall ensure that adequate vegetative buffer is present around concrete disposal areas.
4. All waste materials shall be stored away from drainage ditches, swales and drainage structures. Where appropriate, containment berms shall be placed around waste storage areas.
5. Contractor shall take appropriate measures to control dust generated during construction activities.
6. Contractor shall construct appropriate entryways to prohibit the tracking of dirt and debris off-site.
7. A centrally located port-a-pot shall be placed and maintained on the project site at all times during construction activities.
8. Equipment maintenance, repair and washdowns shall be performed off-site or in locations approved by Operator.
9. A copy of this SWPPP shall be kept on-site for the entire construction period. The NOI associated with this SWPPP shall be properly displayed on-site for the entire construction period.
10. A Notice of Termination (N.O.T.) shall be filed for this project upon City acceptance of the project and after final stabilization has been achieved and the responsibility for continued Storm Water Management/Erosion Control shall become that of the builder, city, or other appropriate entity responsible for any applicable construction activity in the future.
11. Complete inspection records pertaining to this NOI and SWPPP must be maintained by the Operator for a period of three (3) years following final stabilization.

BMP MAINTENANCE SCHEDULE

BMP	MAINTENANCE FREQUENCY	BY:
TEMPORARY STONE CONSTRUCTION ENTRANCE/EXIT	WEEKLY AND AFTER RAIN STORM EVENTS	OWNER
ROCK CHECK DAM	WEEKLY AND AFTER RAIN STORM EVENTS	OWNER
SILT FENCE	WEEKLY AND AFTER RAIN STORM EVENTS	OWNER
INLET PROTECTION	WEEKLY AND AFTER RAIN STORM EVENTS	OWNER

SEEDING SPECIFICATIONS

CULTIPACK SEEDING SPECIFICATIONS

Winter Rye Seed (Fall & Winter)	65 lb/acre	(1.5 lbs/1000 sq. ft.)
Common Bermuda Seed (Spring & Summer)	65 lb/acre	(1.5 lbs/1000 sq. ft.)
17/17/17 Fertilizer	380 lb/acre	(9 lbs/1000 sq. ft.)

HYDROMULCH SEEDING SPECIFICATIONS

Winter Rye Seed (Fall & Winter)	65 lb/acre	(1.5 lbs/1000 sq. ft.)
Common Bermuda Seed (Spring & Summer)	65 lb/acre	(1.5 lbs/1000 sq. ft.)
17/17/17 Fertilizer	380 lb/acre	(9 lbs/1000 sq. ft.)
Wood Cellulose Mulch Fiber	2000 lb/acre	(50 lbs/1000 sq. ft.)
Biodegradable Tacifier	65 lb/acre	(1.5 lbs/1000 sq. ft.)

Note: Soil to be seeded shall be chain harrowed or chain dragged prior to seeding. After seeding, these areas shall be maintained until grass is established and approved by Operator.

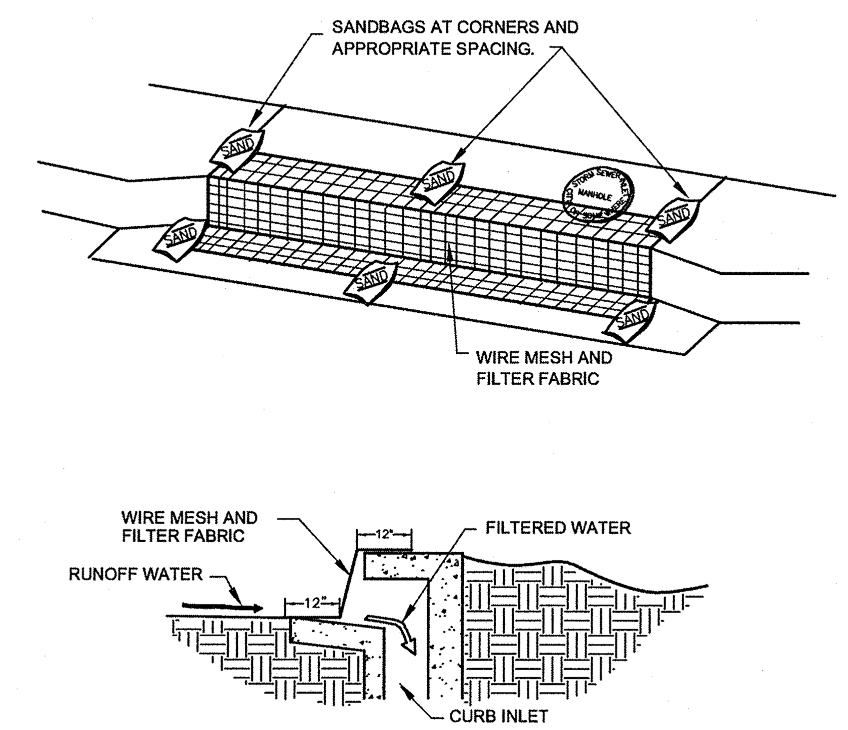

SEDIMENT BARRIIER AT INLETS OR APPROVED EQUALSTONE OVERFLOW STRUCTURE

N.T.S.

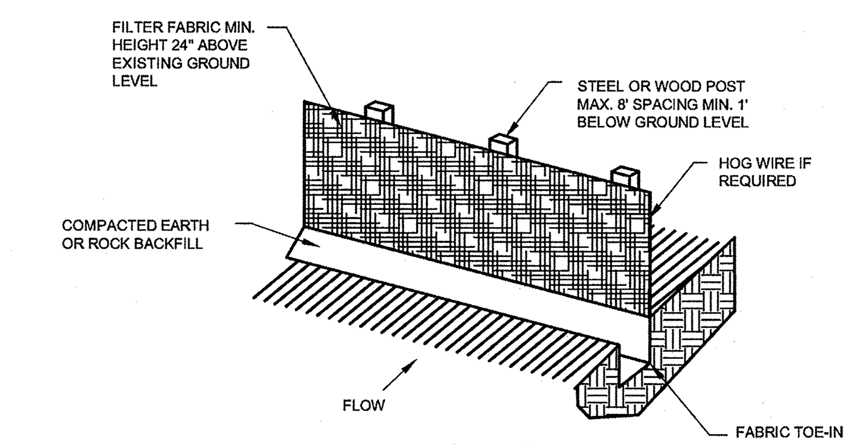

ISOMETRIC VIEW

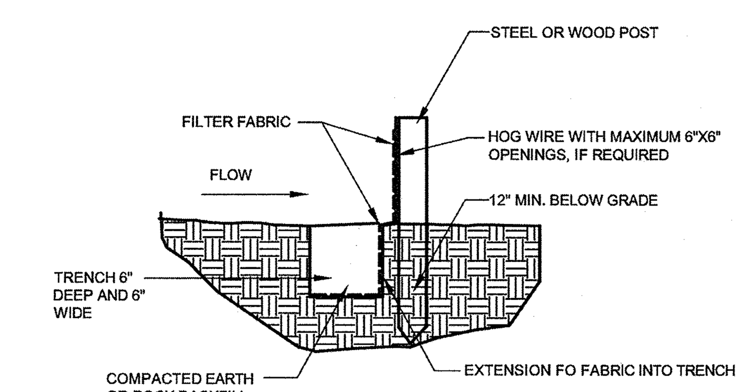

SECTION VIEW

SILT FENCE

N.T.S.

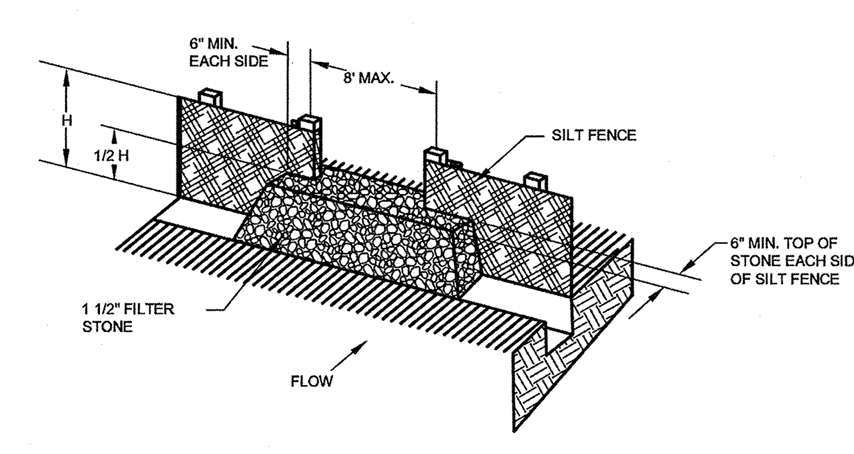

STONE OVERFLOW STRUCTURE

N.T.S.

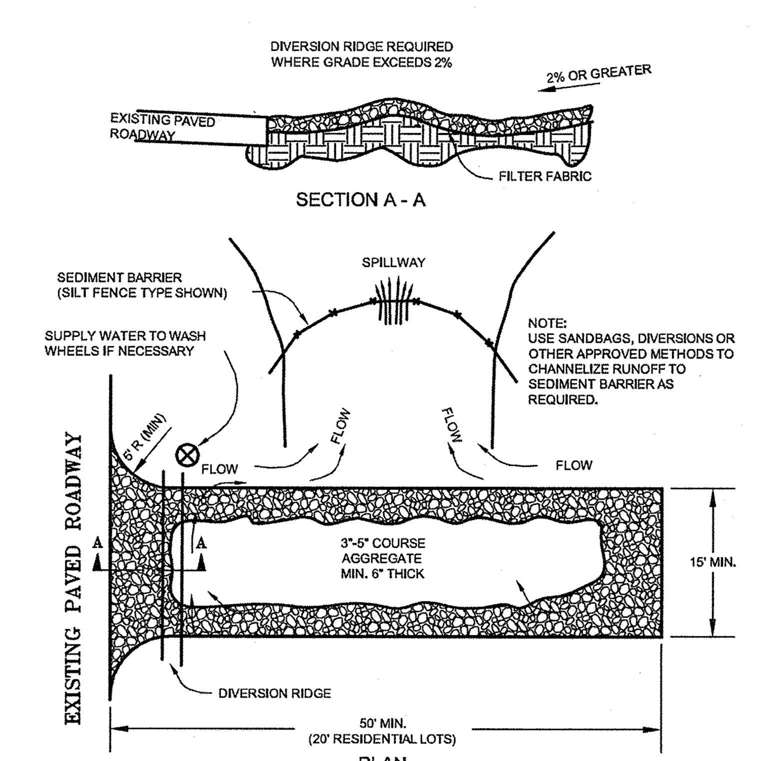

TEMPORARY STONE CONSTRUCTION ENTRANCE / EXIT

N.T.S.

RECORD DRAWING

ALL INFORMATION SHOWN ON THESE PLANS WAS FURNISHED BY THE CONTRACTOR ALL RESPONSIBILITY FOR THE ACCURACY BELONGS TO THE CONTRACTOR.

James Gardella

USA PROFESSIONAL SERVICES GROUP, INC.

DATE: June 16, 2014

REV	DESCRIPTION	DATE

THE CARTER RANCH - PHASE VB

CITY OF CELINA, COLLIN COUNTY, TEXAS

19 FM LTD.
1221 North Interstate 35, Suite 200
Carrollton, Texas 75006
Phone (469) 892-7200 Fax (469) 892-7201

EROSION CONTROL DETAILS

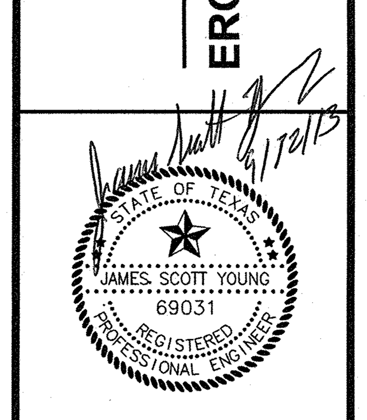

USA PROFESSIONAL SERVICES GROUP, INC.
TEXAS BOARD OF PROFESSIONAL ENGINEERS
REGISTERED ENGINEERING FIRM F-1845
CIVIL ENGINEERS • SURVEYORS
PLANNERS • LANDSCAPE ARCHITECTS
1525 VICEROY DRIVE
DALLAS, TEXAS 75235
(214) 634-3300 FAX (214) 634-3338

DATE: SEPTEMBER 2013

SCALE: NOT TO SCALE

SHEET: 24 OF 31

PROJECT NO. 2009016.04

P:\Sdskengn\2009016.04\Dwg\2009016_04-ed.dwg, 9/10/2013 3:32:05 PM, Duc Tran

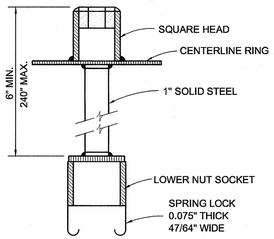

SPRING LOCK VALVE EXTENSION

NO SCALE

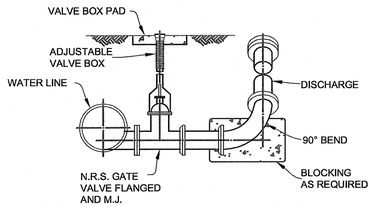

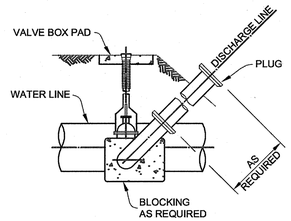

BLOW OFF VALVE

NO SCALE

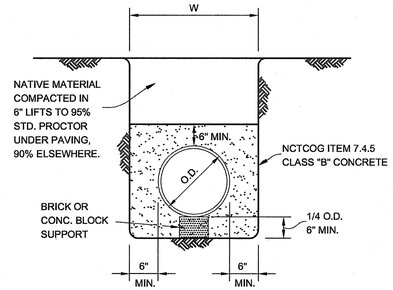

CLASS G EMBEDMENT

CONCRETE ENCASEMENT

NO SCALE

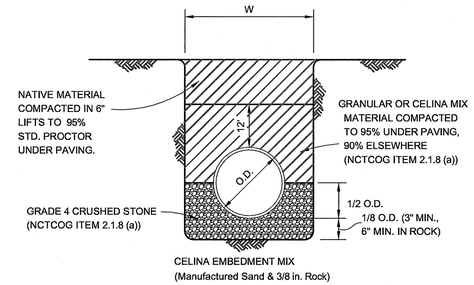

CLASS B+ EMBEDMENT

STD PVC WATER

NO SCALE

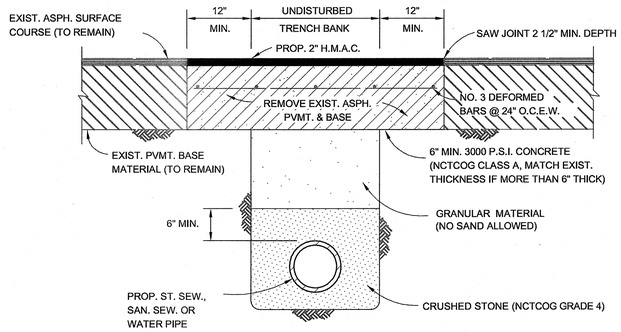

ASPHALT STREET REPAIR

NO SCALE

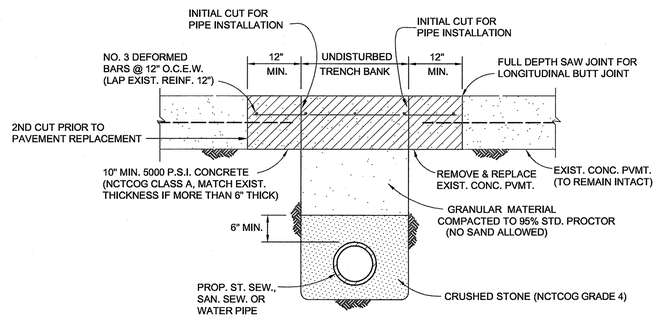

CONCRETE STREET REPAIR

NO SCALE

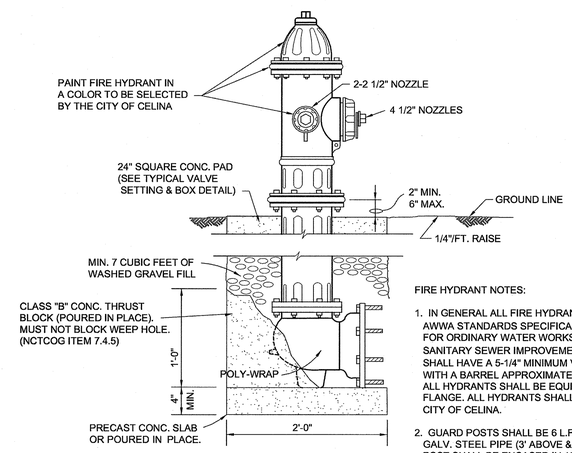

FIRE HYDRANT NOTES:

1. IN GENERAL ALL FIRE HYDRANTS SHALL CONFORM TO AWWA STANDARDS SPECIFICATIONS FOR FIRE HYDRANTS FOR ORDINARY WATER WORKS SERVICE FOR WATER AND SANITARY SEWER IMPROVEMENTS. FIRE HYDRANTS SHALL HAVE A 5-1/4" MINIMUM VALVE OPENING AND WITH A BARREL APPROXIMATELY 7" INSIDE DIAMETER. ALL HYDRANTS SHALL BE EQUIPPED WITH A BREAKAWAY FLANGE. ALL HYDRANTS SHALL BE APPROVED BY THE CITY OF CELINA.
2. GUARD POSTS SHALL BE 6 L.F. OF 6" DIA. HOT DIPPED GALV. STEEL PIPE (3' ABOVE & BELOW GROUND LEVEL). POST SHALL BE ENCASED IN 16" DIA. CONC. PIER TO A DEPTH OF 12" BELOW POST BOTTOM. REINFORCE CONC. PIER WITH 2 NO. 6 BARS (12" LONG) THRU POST INTO PIER.

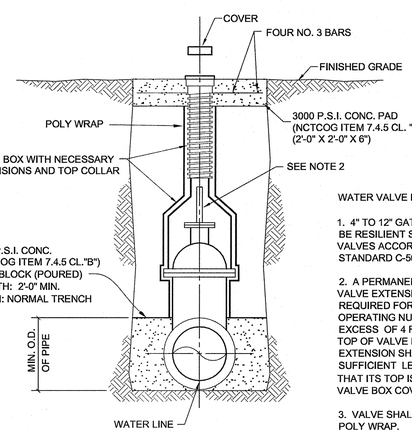

VALVE SETTING & BOX

NO SCALE

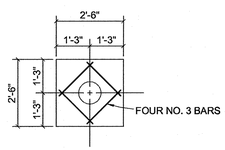

VALVE BOX PAD PLAN

NO SCALE

WATER VALVE NOTES:

1. 4" TO 12" GATE VALVE SHALL BE RESILIENT SEATED WEDGE GATE VALVES ACCORDANCE WITH AWWA STANDARD C-509.

2. A PERMANENTLY ATTACHED VALVE EXTENSION STEM SHALL BE REQUIRED FOR ANY VALVE WHOSE OPERATING NUT IS LOCATED IN EXCESS OF 4 FEET BELOW THE TOP OF VALVE BOX. THIS EXTENSION SHALL BE OF SUFFICIENT LENGTH TO INSURE THAT ITS TOP IS WITHIN 4" OF THE VALVE BOX COVER.

3. VALVE SHALL BE WRAPPED IN POLY WRAP.

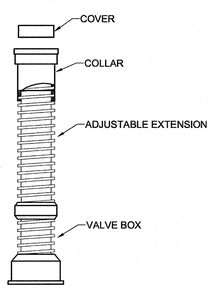

VALVE BOX WITH EXTENSION

NO SCALE

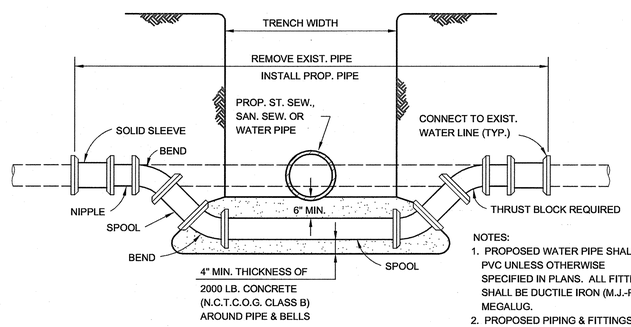

NOTES:

1. PROPOSED WATER PIPE SHALL BE PVC UNLESS OTHERWISE SPECIFIED IN PLANS. ALL FITTINGS SHALL BE DUCTILE IRON (M.J.-P.E.) MEGALUG.
2. PROPOSED PIPING & FITTINGS ARE SYMMETRIC ABOUT CENTER OF PROP. SAN. SEW. OR ST. SEW. PIPE AND SHALL RETAIN TEST PRESSURES.
3. ALL THRUST BLOCKING SHALL BE SUBSIDIARY TO UNIT PRICE.
4. CROSSING OF SANITARY SEWER SHALL BE IN ACCORDANCE WITH T.N.R.C.C. REQUIREMENTS. (CHAPTER 317.13 APPENDIX E)

WATER MAIN LOWERING

NO SCALE

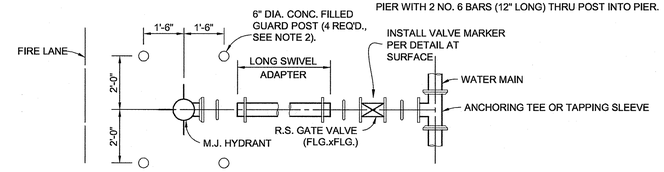

TYPICAL FIRE HYDRANT INSTALLATION

NO SCALE

BENCHMARKS

TBM #1= Centerline of existing sanitary manhole at the centerline intersection of Appaloosa Lane and Equine Lane located in "The Carter Ranch Phase IIA". Elevation = 687.57 feet

TBM #2 = "X" Found in concrete at the centerline intersection of Equine Lane and Old Stables Drive located in "The Carter Ranch Phase IIA". Elevation =728.63 feet

CM #5 = Concrete monument with 5/8 inch iron rod with cap stamped "Huitt-Zollars" at the Southeast corner of the intersection of State Highway 289 and County Road 88, located approximately 45' feet South of the centerline of County Road 88 and 112' feet East of the centerline of State Highway 289 Elevation = 681.76 feet

RECORD DRAWING

ALL INFORMATION SHOWN ON THESE PLANS WAS FURNISHED BY THE CONTRACTOR ALL RESPONSIBILITY FOR THE ACCURACY BELONGS TO THE CONTRACTOR.

James Gardella

USA PROFESSIONAL SERVICES GROUP, INC.

DATE: June 16, 2014

CITY OF CELINA, TEXAS

WATER DISTRIBUTION SYSTEM

STANDARD DETAILS

REV	DESCRIPTION	DATE

THE CARTER RANCH - PHASE VB

CITY OF CELINA, COLLIN COUNTY, TEXAS

WATER DETAILS

19 FM LTD.
1221 North Interstate 35, Suite 200
Carrollton, Texas 75006
Phone (469) 892-7200 Fax (469) 892-7201

STATE OF TEXAS
JAMES SCOTT YOUNG
69031
REGISTERED
PROFESSIONAL ENGINEER

USA PROFESSIONAL SERVICES GROUP, INC.
TEXAS BOARD OF PROFESSIONAL ENGINEERS
REGISTERED ENGINEERING FIRM F-1945
CIVIL ENGINEERS • SURVEYORS
PLANNERS • LANDSCAPE ARCHITECTS
1525 VICEROY DRIVE
DALLAS, TEXAS 75235
(214) 634-3300 FAX (214) 634-3338

DATE: SEPTEMBER 2013

SCALE: NOT TO SCALE

SHEET: 25 OF 31

PROJECT NO. 2009016.04

P:\Sdesign\2009016.04\Dwg\2009016_04wd.dwg, 11/12/2009 10:46:18 AM, Duo Tran

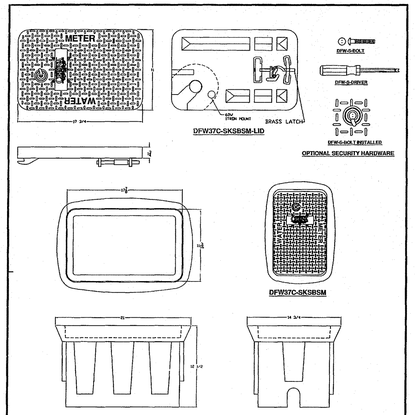

NOTES

1) DIM'S ± 1/8 U.N.O.
2) SNAP LOCK POCKET WILL RECEIVE I-TRON ERT. SNAP LOCK SLOT IS 1.80" ± .015" TO ALLOW FOR A FINGER FORCE INSTALL. POCKET HEIGHT IS 15/16 FOR MIN 1/8" AIR GAP.
3) IF TOUCH PAD IS REQ'D USE A HHMAFS AND HIT THE KNOCK OUT SLUG TO MAKE 1 7/8"ø

DFW DFW PLASTICS, INC. 7001 JARVIS RD FORT WORTH, TX 76179 (817) 439-3500 (817) 439-3700 (f) www.dfwplastic.com	CITY OF CELINA DFW 37C-SKSBSM SINGLE 3/4" OR 1" PLASTIC WATER METER BOX	FILE NAME: CITY OF CELINA - DFW37C-SKSBSM.dwg UPDATED: 07/28/05 DRAWN BY: J.C.A. SCALE: 1:8

LOCATION OF SAMPLE STATION TO BE DETERMINED BY PUBLIC WORKS DEPARTMENT

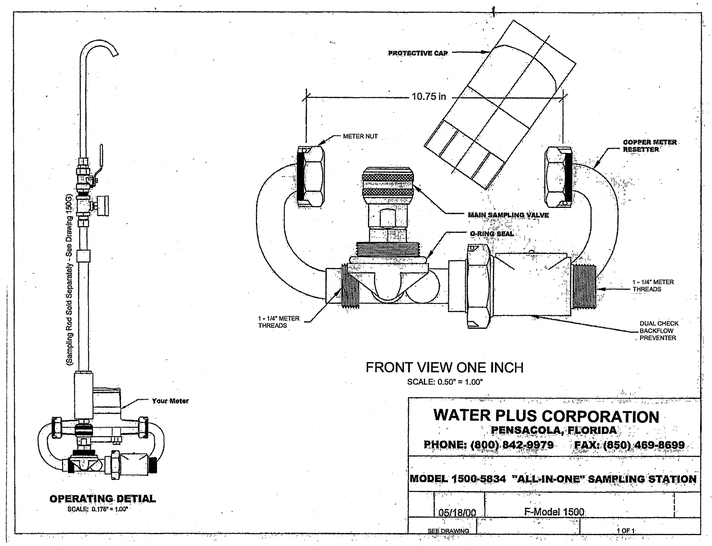

FRONT VIEW ONE INCH
SCALE: 0.50" = 1.00"

WATER PLUS CORPORATION
PENSACOLA, FLORIDA
PHONE: (800) 842-9979 FAX: (850) 469-8699

MODEL 1500-5834 "ALL-IN-ONE" SAMPLING STATION

05/18/00	F-Model 1500	
SEE DRAWING		1 OF 1

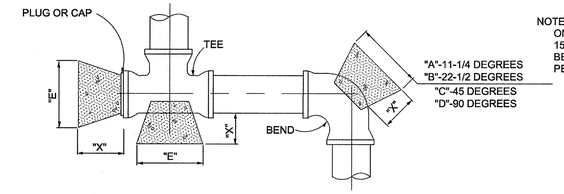

NOTE: ALL CALCULATIONS ARE BASED ON A WATER LINE PRESSURE OF 150 PSI AND AN ALLOWABLE SOIL BEARING VALUE OF 2,500 POUNDS PER SQUARE FOOT.

THESE ARE MINIMUM REQUIREMENTS. INCREASE AREA FOR CONDITIONS OTHER THAN THESE VALUES.

HORIZONTAL BLOCKING TABLE

PIPE SIZE	"X" DIM. IN. FT.	11-1/4 DEGREES		22-1/2 DEGREES		45 DEGREES		90 DEGREES		TEE & PLUG	
		"A"	MIN. AREA	"B"	MIN. AREA	"C"	MIN. AREA	"D"	MIN. AREA	"E"	MIN. AREA
4"	1.5	1.00	1.00	1.00	1.00	1.00	1.00	1.00	1.06	1.00	1.00
6"	1.5	1.00	1.00	1.00	1.00	1.14	1.30	1.55	2.40	1.30	1.70
8"	1.5	1.00	1.00	1.08	1.18	1.52	2.31	2.07	4.27	1.74	3.02
10"	1.5	1.00	1.00	1.35	1.84	1.90	3.61	2.58	6.66	2.17	4.71
12"	1.5	1.00	1.33	1.63	2.65	1.86	5.19	3.10	9.60	2.61	6.79
14"	1.5	1.03	1.81	1.90	3.60	2.66	7.07	3.61	13.06	3.04	9.24
16"	2.0	1.18	2.36	2.17	4.71	3.04	9.23	4.13	17.06	3.47	12.06
18"	2.0	1.33	2.99	2.44	5.96	3.42	11.69	4.65	21.59	3.91	15.27
20"	2.0	1.48	3.70	2.71	7.35	3.80	14.43	5.16	26.66	4.34	18.85
21"	2.0	1.55	4.07	2.85	8.11	3.99	15.91	5.42	29.39	4.56	20.78
24"	2.0	1.77	5.32	3.25	10.59	4.56	20.77	6.20	38.39	5.21	27.14
27"	2.5	1.99	6.73	3.66	13.40	5.13	26.29	6.97	48.58	5.86	34.35
30"	2.5	2.22	8.31	4.07	16.55	5.70	32.46	7.74	59.98	6.51	42.41
33"	2.5	2.44	10.06	4.47	20.02	6.27	39.28	8.52	72.57	7.16	51.31
36"	2.5	2.66	11.97	4.88	23.83	6.84	46.74	9.29	86.37	7.81	61.07
39"	3.0	2.88	14.05	5.29	27.97	7.41	54.86	10.07	101.36	8.47	71.68
42"	3.0	3.10	16.30	5.69	32.43	7.98	63.62	10.85	117.56	9.12	83.13

NOTE: CLASS "B" CONCRETE 2,000 PSI SHALL BE USED FOR ALL BLOCKING UNLESS OTHERWISE NOTED ON STANDARD DETAILS AND / OR PLANS.

THE MINIMUM VERTICAL DIMENSION OF ALL BLOCKING SHALL BE 1.5 TIMES THE PIPE DIAMETER WITH AT LEAST 0.75 TIMES THE PIPE DIAMETER EXTENDING BOTH ABOVE AND BELOW THE PIPE CENTERLINE. THIS DIMENSION DETERMINES THE "A" DIMENSION FOR 11-1/4" BENDS.

FOR 22-1/2°, 45 , 90 , AND TEES AND PLUGS, THE VERTICAL DIMENSION SHALL BE EQUAL TO THE HORIZONTAL DIMENSION SHOWN TO PRODUCE THE REQUIRED MINIMUM AREA.

ALL MINIMUM AREAS ARE IN SQUARE FEET.

BLOCKING TO BE AGAINST UNDISTURBED TRENCH WALLS AND BOTTOM.

HORIZONTAL THRUST BLOCKING DETAIL

NO SCALE

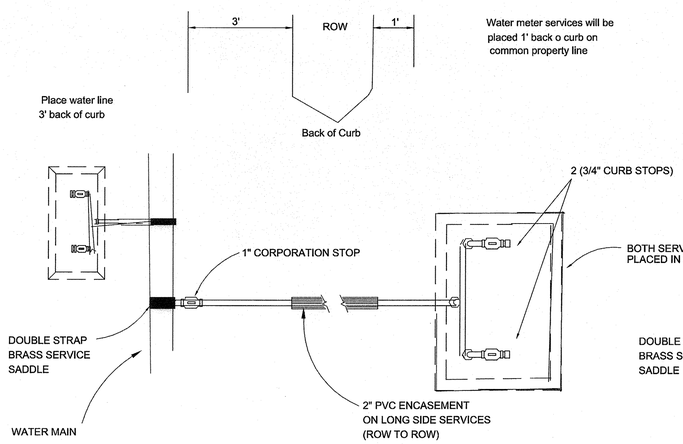

Water meter services will be placed 1' back o curb on common property line

PLAN VIEW

NOTES

1. WHERE TAPPING EXISTING MAINS OR PVC WATER MAINS, DOUBLE STRAPPED BRONZE, STAINLESS STEEL, OR EPOXY COATED DUCTILE IRON SADDLES SHALL BE USED.
2. COPPER SERVICES SHALL BE TYPE K CONTINUOUS WITH NO JOINTS FROM CORP. STOP TO QUARTER BEND.
3. ALL COPPER FITTINGS SHALL BE COMPRESSION FITTINGS.
4. METERS SHALL NOT BE INSTALLED IN EXISTING OR PROPOSED SIDEWALK OR DRIVEWAYS.

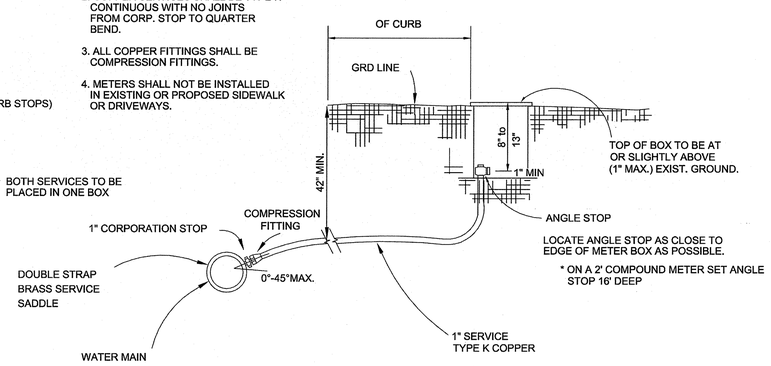

ELEVATION

SERVICE CONNECTION DETAIL (LOTS SMALLER THAN 10,000 S.F.)

NO SCALE

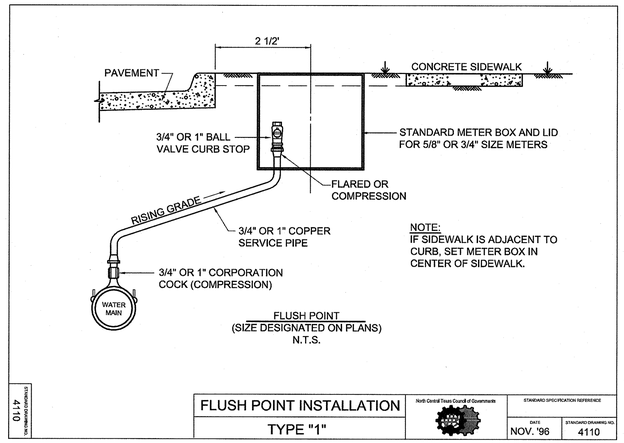

BENCHMARKS

TBM #1= Centerline of existing sanitary manhole at the centerline intersection of Appaloosa Lane and Equine Lane located in "The Carter Ranch Phase IIA". Elevation = 687.57 feet

TBM #2 = "X" Found in concrete at the centerline intersection of Equine Lane and Old Stables Drive located in "The Carter Ranch Phase IIA". Elevation =728.63 feet

CM #5 = Concrete monument with 5/8 inch iron rod with cap stamped "Huitt-Zollars" at the Southeast corner of the intersection of State Highway 289 and County Road 88, located approximately 45' feet South of the centerline of County Road 88 and 112' feet East of the centerline of State Highway 289 Elevation = 681.76 feet

RECORD DRAWING

ALL INFORMATION SHOWN ON THESE PLANS WAS FURNISHED BY THE CONTRACTOR ALL RESPONSIBILITY FOR THE ACCURACY BELONGS TO THE CONTRACTOR.

James Gardella
USA PROFESSIONAL SERVICES GROUP, INC.
DATE: June 16, 2014

CITY OF CELINA, TEXAS

WATER DISTRIBUTION SYSTEM
STANDARD DETAILS

REV	DESCRIPTION	DATE

THE CARTER RANCH - PHASE VB
CITY OF CELINA, COLLIN COUNTY, TEXAS

WATER DETAILS

19 FM LTD.
1221 North Interstate 35, Suite 200
Carrollton, Texas 75006
Phone (469) 892-7200 Fax (469) 892-7201

STATE OF TEXAS
JAMES SCOTT YOUNG
69031
REGISTERED PROFESSIONAL ENGINEER

USA PROFESSIONAL SERVICES GROUP, INC.
TEXAS BOARD OF PROFESSIONAL ENGINEERS REGISTERED ENGINEERING FIRM F-1845
CIVIL ENGINEERS • SURVEYORS
PLANNERS • LANDSCAPE ARCHITECTS
1525 VICEROY DRIVE
DALLAS, TEXAS 75235
(214) 634-3300 FAX (214) 634-3338

DATE: SEPTEMBER 2013
SCALE: NOT TO SCALE
SHEET: 26 OF 31
PROJECT NO. 2009016.04

P:\Sdesign\2009016.04\Dwg\ 2009016_04-wd.dwg, 11/12/2009 10:46:18 AM, Duc Tran

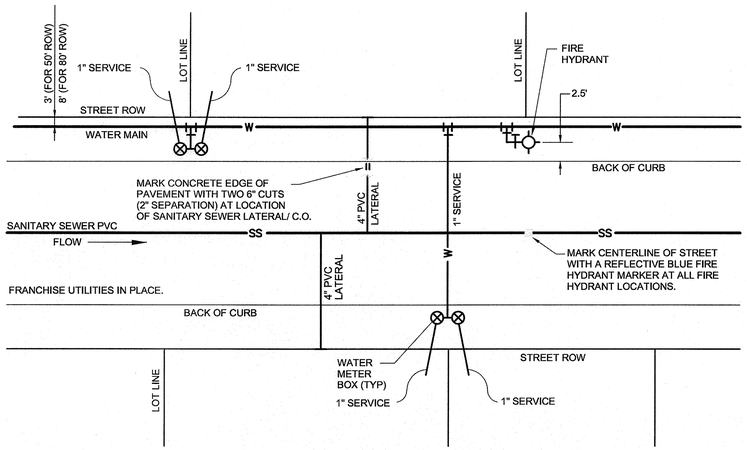

TYPICAL WATER/SANITARY SEWER SERVICE AND FIRE HYDRANT DETAIL

(UNLESS OTHERWISE SHOWN)
NTS

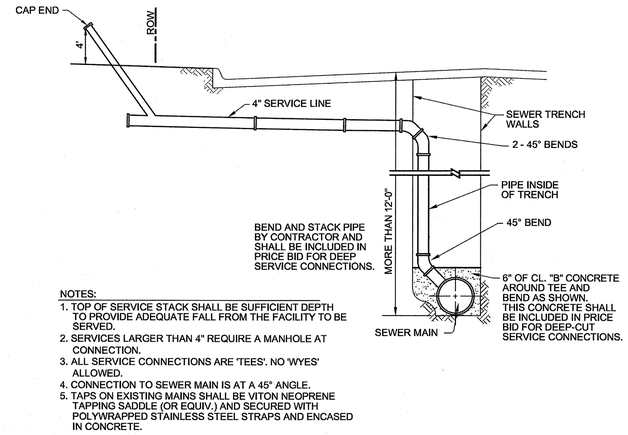

NOTES:
1. TOP OF SERVICE STACK SHALL BE SUFFICIENT DEPTH TO PROVIDE ADEQUATE FALL FROM THE FACILITY TO BE SERVED.
2. SERVICES LARGER THAN 4" REQUIRE A MANHOLE AT CONNECTION.
3. ALL SERVICE CONNECTIONS ARE 'TEES'. NO 'WYES' ALLOWED.
4. CONNECTION TO SEWER MAIN IS AT A 45° ANGLE.
5. TAPS ON EXISTING MAINS SHALL BE VITON NEOPRENE TAPPING SADDLE (OR EQUIV.) AND SECURED WITH POLYWRAPPED STAINLESS STEEL STRAPS AND ENCASED IN CONCRETE.

DEEP-CUT SEWER SERVICE

NTS

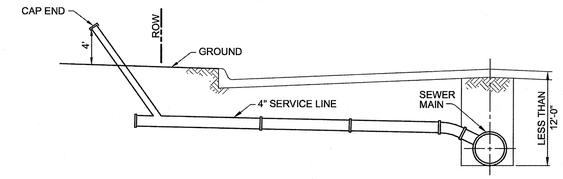

STANDARD SEWER SERVICE

NTS

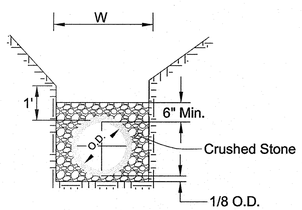

CLASS H EMBEDMENT
P.V.C. PIPE ONLY
STD. P.V.C. SEWER INSTALLATION
STD. P.V.C., R.C.P. & DUCTILE WATER INSTALLATION.

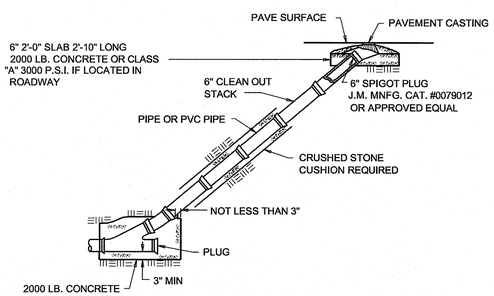

STANDARD CLEANOUT

NTS

SANITARY SEWER AND WATER LINE CROSSING DETAILS

CASE 7

NEW WATER LINE OVER EXISTING PRESSURE RATED SEWER LINE

WHERE A NEW POTABLE WATERLINE CROSSES AN EXISTING, PRESSURE RATED WASTEWATER MAIN OR LATERAL, ONE SEGMENT OF THE WATERLINE PIPE SHALL BE CENTERED OVER THE WASTEWATER MAIN OR LATERAL SUCH THAT THE JOINTS OF THE WATERLINE PIPE ARE EQUIDISTANT AND AT LEAST NINE FEET HORIZONTALLY FROM THE CENTERLINE OF THE WASTEWATER MAIN OR LATERAL. THE POTABLE WATERLINE SHALL BE AT LEAST SIX INCHES ABOVE THE WASTEWATER MAIN OR LATERAL. WHENEVER POSSIBLE, THE CROSSING SHALL BE CENTERED BETWEEN THE JOINTS OF THE WASTEWATER MAIN OR LATERAL. IF THE EXISTING WASTEWATER MAIN OR LATERAL SHOWS SIGNS OF LEAKING, IT SHALL BE REPLACED FOR AT LEAST NINE FEET IN BOTH DIRECTIONS (18 FEET TOTAL) WITH AT LEAST 150 PSI PRESSURE RATED PIPE (§290.44(e)(4)(B)(ii)).

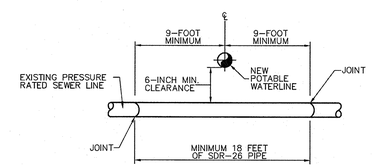

GENERAL NOTES:

1) ENCASEMENT PIPE SHALL MEET THE FOLLOWING REQUIREMENTS:
   -SDR-26 OR 150 PSI PRESSURE CLASS PIPE AS NOTED
   -MINIMUM 18 FEET LONG
   -DIAMETER OF ENCASEMENT PIPE = DIAMETER OF CARRIER PIPE + 2 NOMINAL PIPE SIZES MINIMUM (EXAMPLE: 8" CARRIER NEEDS 12" ENCASEMENT)
   -SPACE AROUND CARRIER PIPE SHALL BE SUPPORTED AT MINIMUM 5 FEET INTERVALS WITH SPACERS, OR FILLED TO SPRINGLINE WITH WASHED SAND
   -ENCASEMENT PIPE SHALL BE CENTERED ON THE CROSSING
   -BOTH ENDS TO BE SEALED WITH CEMENT GROUT OR A MANUFACTURED WATER-TIGHT SEAL
2) CEMENT STABILIZED SAND EMBEDMENT SHALL MEET THE FOLLOWING:
   -MINIMUM 2.5 BAGS OF CEMENT PER C.Y. OF MIXTURE
   -MINIMUM EMBEDMENT THICKNESS IS TO BE AS FOLLOWS: 6" ABOVE, 4" BELOW AND 6" ON THE SIDES OF THE PIPE
   -EMBEDMENT SHALL EXTEND A MINIMUM OF 12" BEYOND PIPE JOINTS ON EACH END
3) SDR 26 SEWER PIPE MEETS THE T.N.R.C.C. STIFFNESS REQUIREMENT OF 115 PSI AT 5% DEFLECTION
4) WHERE LEAKAGE/NO LEAKAGE OF EXISTING SEWERS MUST BE DETERMINED, IT SHALL BE BY A LICENSED TEXAS PROFESSIONAL ENGINEER
5) 18' MINIMUM LENGTH PIPE OR ENCASEMENT SEGMENTS MUST BE CENTERED ON THE CROSSING (JOINTS 9' FROM THE CROSSING)
6) THESE DETAILS AND NOTES ARE INTENDED TO COMPLY WITH THE T.N.R.C.C. CHAPTER 290 (WATER) DATED FEBRUARY 2004, AND DRAFT CHAPTER 217 (SEWER) RULE LOG 95100-317-WT
7) WHERE ENCASEMENT PIPE IS SPECIFIED, CLEARANCES ARE MEASURED FROM THE ENCASEMENT PIPE NOT THE CARRIER PIPE
8) PIPE MEETING AWWA C900 OR C905 DR-18 MINIMUM WILL MEET THE T.N.R.C.C. REQUIREMENTS FOR 150 PSI PIPE, THIS PIPE MAY BE SUBSTITUTED FOR SDR-26 PIPE

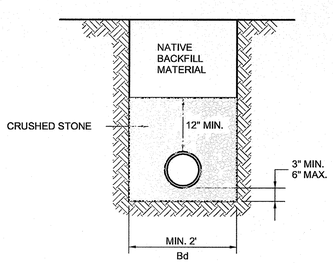

CLASS "4" WASTEWATER EMBEDMENT

NTS

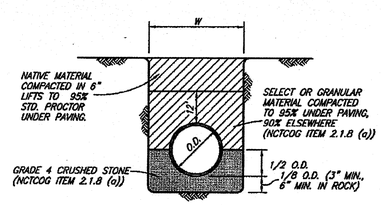

CLASS B+ EMBEDMENT

STD PVC WATER OR D.I.P.

RECORD DRAWING

ALL INFORMATION SHOWN ON THESE PLANS WAS FURNISHED BY THE CONTRACTOR ALL RESPONSIBILITY FOR THE ACCURACY BELONGS TO THE CONTRACTOR.

James Gardella
USA PROFESSIONAL SERVICES GROUP, INC.
DATE: June 16, 2014

REV	DESCRIPTION	DATE

THE CARTER RANCH - PHASE VB
CITY OF CELINA, COLLIN COUNTY, TEXAS

SANITARY SEWER DETAILS

19 FM LTD.
1221 North Interstate 35, Suite 200
Carrollton, Texas 75006
Phone (469) 892-7200 Fax (469) 892-7201

STATE OF TEXAS
JAMES SCOTT YOUNG
69031
REGISTERED PROFESSIONAL ENGINEER

USA PROFESSIONAL SERVICES GROUP, INC.
TEXAS BOARD OF PROFESSIONAL ENGINEERS REGISTERED ENGINEERING FIRM F-1845
CIVIL ENGINEERS • SURVEYORS
PLANNERS • LANDSCAPE ARCHITECTS
1525 VICEROY DRIVE
DALLAS, TEXAS 75235
(214) 634-3300 FAX (214) 634-3338

DATE: SEPTEMBER 2013
SCALE: NOT TO SCALE
SHEET: 27 OF 31
PROJECT NO. 2009016.04

P:\Sdesign\2009016\DWG\2009016_04-ssd.dwg, 11/12/2009 10:46:18 AM, Doc-Tran

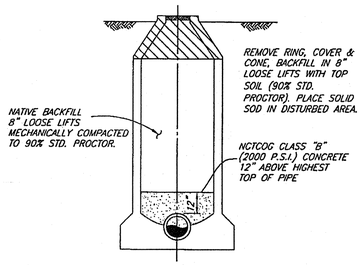

MANHOLE ABANDONMENT

OUTSIDE PAVEMENT AREA

(MHABAN)

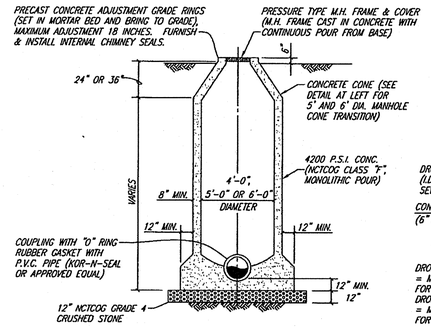

STANDARD MANHOLE ELEVATION

4', 5' & 6' DIAMETER MANHOLES

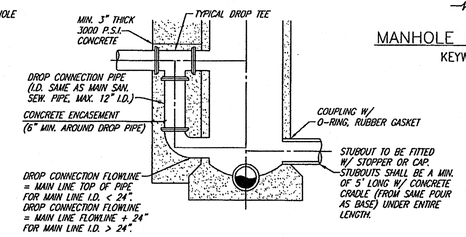

DROP MANHOLE ELEVATION

4', 5' & 6' DIAMETER MANHOLES

SANITARY SEWER MANHOLE (CAST IN PLACE)

NO SCALE

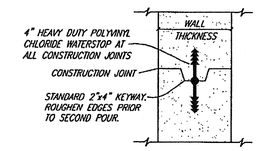

MANHOLE CONSTRUCTION JOINT

KEYWAY WITH WATERSTOP

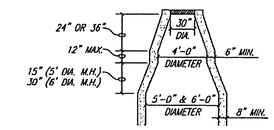

CONE TRANSITION

5' & 6' DIAMETER MANHOLES ONLY

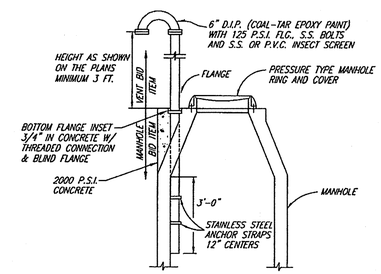

CONE TOP MANHOLE VENT

NO SCALE

ERGO XL Assembly

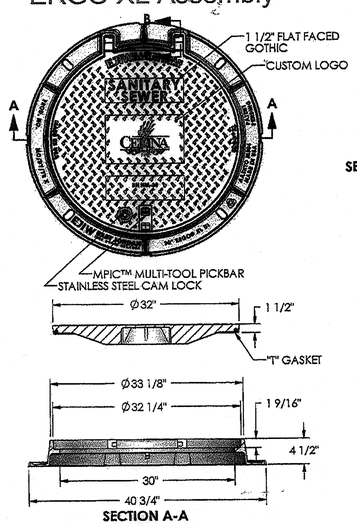

SECTION A-A

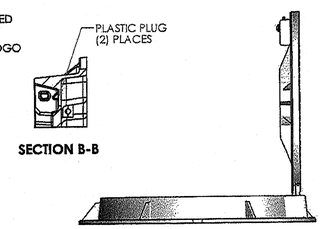

SECTION B-B

SAFETY LOCK & REMOVAL POSITION AT 90°

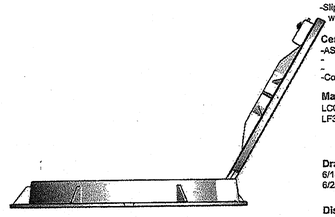

FULLY OPENED POSITION AT 120°

ej

Product Number
00148038L01

Design Features
-Materials
Cover
Ductile Iron (80-55-06)
Frame
Ductile Iron (80-55-06)

-Design Load
Heavy Duty
-Open Area
n/a
-Coating
Undipped
-√ Designates Machined Surface

-Slip Resistant Surface
with the LLLL® registered trademark

Certification
-ASTM A536
-
-
-Country of Origin: USA

Major Components
LC00148038
LF300454075

Drawing Revision
6/18/2012 Designer: SDC
6/25/2012 Revised By: SDC

Disclaimer
Weights (lbs/kg), dimensions (inches/mm) and drawings provided for your guidance. We reserve the right to modify specifications without prior notice.

CONFIDENTIAL: This drawing is the property of EJ Group, Inc. and embodies confidential information, registered marks, patents, trade secret information, and/or know-how that is the property of EJ Group, Inc. Copyright © 2011 EJ Group, Inc. All rights reserved.

Contact
800.626.4653
ejco.com

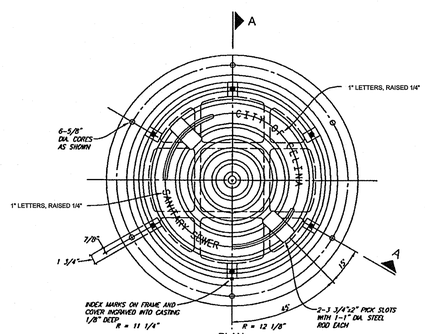

PLAN

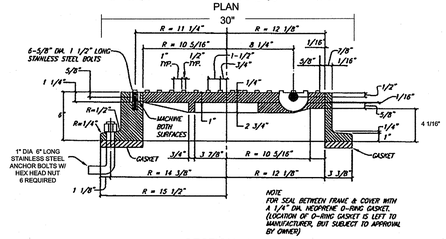

NOTE
FOR SEAL BETWEEN FRAME & COVER WITH A 1/4" DIA. NEOPRENE O-RING GASKET. (LOCATION OF O-RING GASKET IS LEFT TO MANUFACTURER, BUT SUBJECT TO APPROVAL BY OWNER)

SECTION A-A

TYPE "S" MANHOLE FRAME AND COVER

NO SCALE

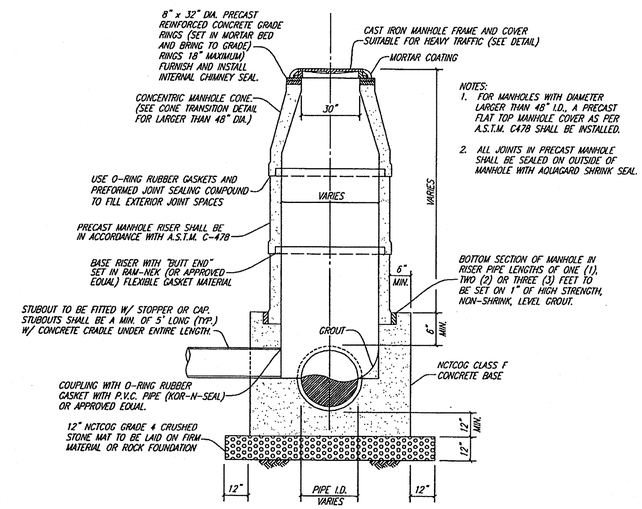

NOTES:
1. FOR MANHOLES WITH DIAMETER LARGER THAN 48" I.D., A PRECAST FLAT TOP MANHOLE COVER AS PER A.S.T.M. C478 SHALL BE INSTALLED.
2. ALL JOINTS IN PRECAST MANHOLE SHALL BE SEALED ON OUTSIDE OF MANHOLE WITH AQUAGARD SHRINK SEAL.

PRECAST CONCRETE MANHOLE

NO SCALE

RECORD DRAWING

ALL INFORMATION SHOWN ON THESE PLANS WAS FURNISHED BY THE CONTRACTOR ALL RESPONSIBILITY FOR THE ACCURACY BELONGS TO THE CONTRACTOR.

James Gardella
USA PROFESSIONAL SERVICES GROUP, INC.
DATE: June 16, 2014

REV	DESCRIPTION	DATE

THE CARTER RANCH - PHASE VB
CITY OF CELINA, COLLIN COUNTY, TEXAS

SANITARY SEWER DETAILS

19 FM LTD.
1221 North Interstate 35, Suite 200
Carrollton, Texas 75006
Phone (469) 892-7200 Fax (469) 892-7201

STATE OF TEXAS
JAMES SCOTT YOUNG
69031
REGISTERED PROFESSIONAL ENGINEER

USA PROFESSIONAL SERVICES GROUP, INC.
TEXAS BOARD OF PROFESSIONAL ENGINEERS
REGISTERED ENGINEERING FIRM F-1845
CIVIL ENGINEERS • SURVEYORS
PLANNERS • LANDSCAPE ARCHITECTS
1526 VICEROY DRIVE
DALLAS, TEXAS 75235
(214) 634-3300 FAX (214) 634-3338

DATE: SEPTEMBER 2013
SCALE: NOT TO SCALE
SHEET: 28 OF 31
PROJECT NO. 2009016.04

P:\Siskengm\2009016.04\Dwg\2009016_04-sed.dwg, 11/12/2009 10:46:18 AM, Duc Tran

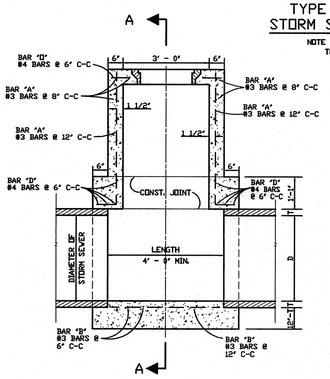

ELEVATION
N.T.S.

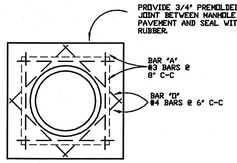

NOTE : FRAME AND COVER SHALL BE BASS & HAYES PATTERN NO. 460-24 OR EQUAL AND SHALL BE GRAY CAST IRON CONFORMING TO ASTM SPEC. A-48 FOR CLASS 30 CAST IRON.

TOP PLAN
TYPE A & TYPE B
STORM SEWER MANHOLE

NOTE : MAXIMUM PIPE SIZE TO BE USED 78"ø
N.T.S.

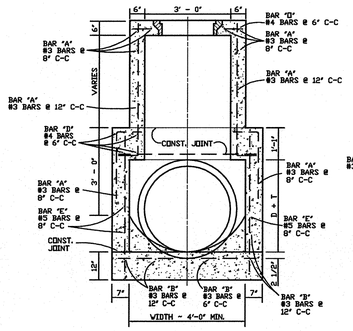

SECTION A-A
N.T.S.

NOTE : FRAME AND COVER SHALL BE BASS & HAYES PATTERN NO. 380-24 OR EQUAL AND SHALL BE GRAY CAST IRON CONFORMING TO ASTM SPEC. A-48 FOR CLASS 30 CAST IRON.

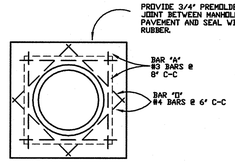

TOP PLAN
TYPE A & TYPE B
STORM SEWER MANHOLE

NOTE : MAXIMUM PIPE SIZE TO BE USED 78"ø
N.T.S.

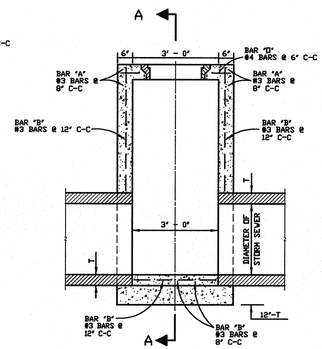

ELEVATION
N.T.S.

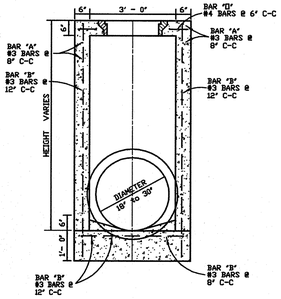

SECTION A-A
N.T.S.

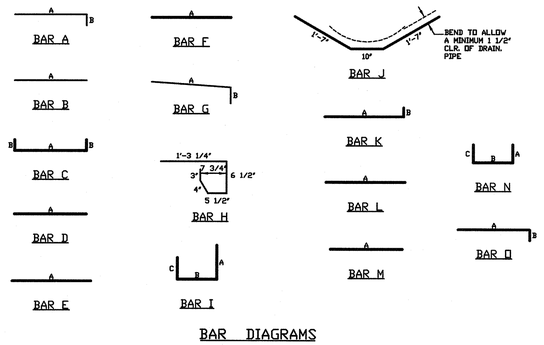

BAR DIAGRAMS

REINFORCING STEEL SCHEDULE DIMENSIONS SHOWN ARE FOR MAXIMUM SIZE INLETS						
INLET LENGTH	BAR TYPE	BAR DIA. (1/8")	NO. REQ'D.	BAR DIMENSIONS		
				A	B	C
10'	A	3	10	3'-2"	0'-3"	–
	B	3	2	8'-10"	–	–
	C	4	16	10'-8"	0'-6"	–
	D	4	4	4'-8"	–	–
	E	5	6	10'-8"	–	–
	F	4	5	1'-2"	–	–
	G	3	5	2'-0"	1'-3"	–
	H	3	15	■	■	■
	I	4	8	4'-8"	3'-2"	3'-2"
	J	5	1	■	■	■
	K	5	4	3'-2"	0'-6"	–
	L	4	5	3'-2"	–	–
	M	4	2	3'-0"	–	–
	N	4	2	4'-8"	3'-2"	4'-8"
12'	A	3	15	3'-2"	0'-6"	–
	B	3	2	11'-6"	–	–
	C	4	16	13'-4"	0'-6"	–
	D	4	9	4'-8"	–	–
	E	5	6	13'-4"	–	–
	F	4	5	1'-2"	–	–
	G	3	12	2'-0"	1'-3"	–
	H	3	26	■	■	■
	I	4	12	4'-8"	3'-2"	3'-2"
	J	5	1	■	■	■
	K	5	6	3'-2"	0'-6"	–
	L	4	11	3'-2"	–	–
	M	4	2	3'-0"	■	■
	N	4	2	4'-8"	3'-2"	4'-8"

■ SEE DIAGRAM FOR DIMENSIONS

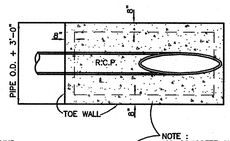

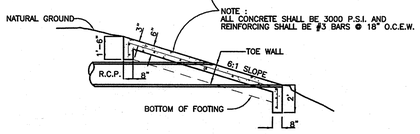

TYPICAL SLOPED END HEADWALL
NTS

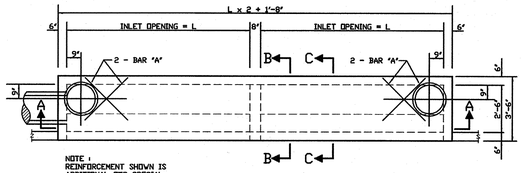

NOTE : REINFORCEMENT SHOWN IS ADDITIONAL FOR SPECIAL CONDITION. FOR REMAINDER OF REINFORCEMENT SEE SECTIONS.

PLAN
N.T.S.

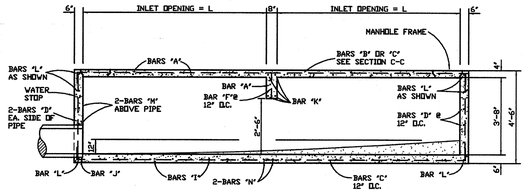

NOTE: CAST-IN-PLACE INLETS TO BE MIN. 4200 PSI CONCRETE.

SECTION A-A
N.T.S.

RECORD DRAWING

ALL INFORMATION SHOWN ON THESE PLANS WAS FURNISHED BY THE CONTRACTOR ALL RESPONSIBILITY FOR THE ACCURACY BELONGS TO THE CONTRACTOR.

James Gardella
USA PROFESSIONAL SERVICES GROUP, INC.
DATE: June 16, 2014

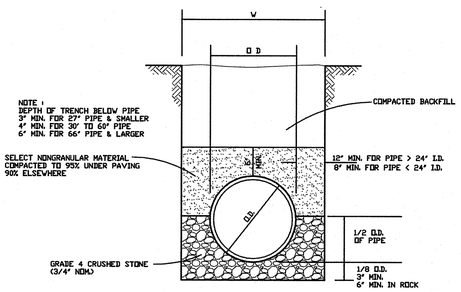

STORM SEWER PIPE BEDDING
N.T.S.

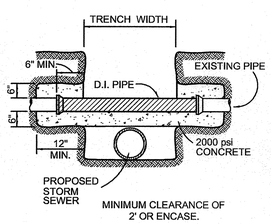

DETAIL OF
UTILITY SUPPORT
N.T.S.

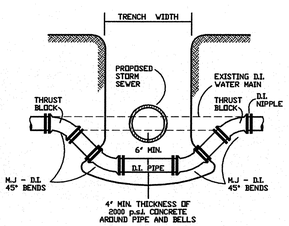

DETAIL FOR
WATER MAIN LOWERING
N.T.S.

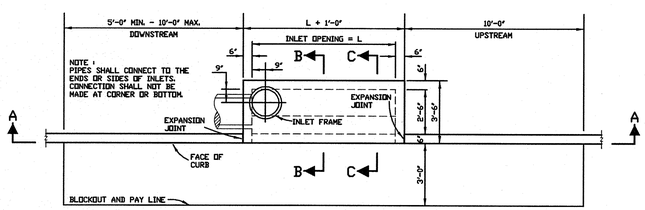

PLAN - STANDARD INLET
N.T.S.

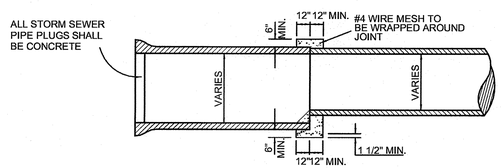

DETAIL OF CONCRETE COLLAR
FOR PIPE CONNECTIONS
N.T.S.

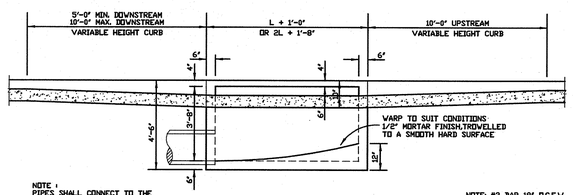

NOTE : PIPES SHALL CONNECT TO THE ENDS OR SIDES OF INLETS. CONNECTION SHALL NOT BE MADE AT CORNER OR BOTTOM.

SECTION A-A
N.T.S.

NOTE: #3 BAR 18" O.C.E.W. IN BLOCK OUT DRILLED INTO EXISTING CONCRETE.

NOTE: CAST-IN-PLACE INLETS TO BE MIN. 4200 PSI CONCRETE.

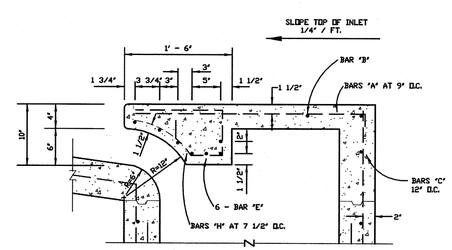

NOTE: CAST-IN-PLACE INLETS TO BE MIN. 4200 PSI CONCRETE.

SECTION C-C
N.T.S.

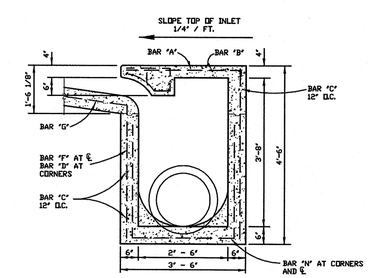

SECTION B-B
N.T.S.

REV	DESCRIPTION	DATE

THE CARTER RANCH - PHASE VB
CITY OF CELINA, COLLIN COUNTY, TEXAS

STORM SEWER DETAILS

19 FM LTD.
1221 North Interstate 35, Suite 200
Carrollton, Texas 75006
Phone (469) 892-7200 Fax (469) 892-7201

11/12/13
STATE OF TEXAS
JAMES SCOTT YOUNG
69031
REGISTERED PROFESSIONAL ENGINEER

USA PROFESSIONAL SERVICES GROUP, INC.
TEXAS BOARD OF PROFESSIONAL ENGINEERS REGISTERED ENGINEERING FIRM F-1845
CIVIL ENGINEERS • SURVEYORS
PLANNERS • LANDSCAPE ARCHITECTS
1525 VICEROY DRIVE
DALLAS, TEXAS 75235
(214) 634-3300 FAX (214) 634-3338

DATE: SEPTEMBER 2013
SCALE: NOT TO SCALE
SHEET: 29 OF 31
PROJECT NO. 2009016.04

P:\Siteworg\2009016\Art\Dwg\ 2009016_04-std.dwg, 11/12/2009 10:46:18 AM, Duc Tran

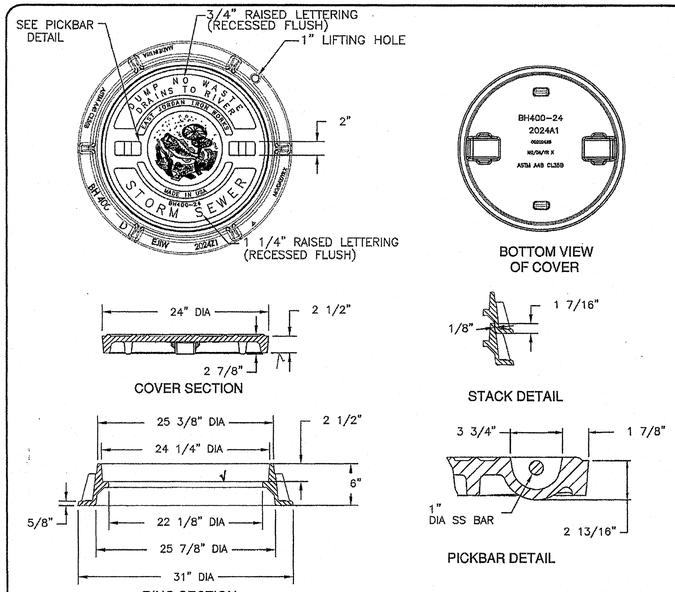

CONFIDENTIAL: This drawing is the property of East Jordan Iron Works, Inc. and embodies confidential information, trade secret information, and/or know how that is the property of East Jordan Iron Works, Inc. © Copyright 2006 East Jordan Iron Works, Inc.

EJIW EAST JORDAN IRON WORKS EST.1883
800-626-4653
www.ejiw.com
MADE IN USA

PRODUCT NUMBER	00202425 00202415
CATALOG NUMBER	400-24 R/C
MANHOLE ASSEMBLY	
LOAD RATING	HEAVY DUTY
COATING	DIPPED
MATERIAL SPECIFICATION	COVER – GRAY IRON ASTM A48 CL35B FRAME – GRAY IRON ASTM A48 CL35B
OPEN AREA	N/A
√ DESIGNATES MACHINED SURFACE	
DRAWN DEW	DATE 06/29/06
LAST REVISED DEW	DATE 11/03/08
REFERENCE INFORMATION	00202425 00202415

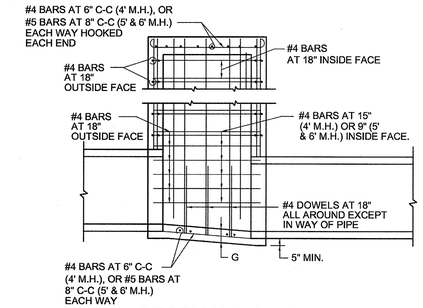

SECTION A-A
N.T.S.

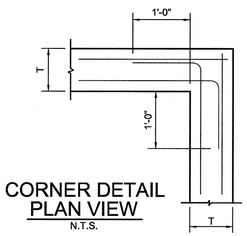

CORNER DETAIL
PLAN VIEW
N.T.S.

NOTES:

1. SLOPE INVERT OF MANHOLE AS INDICATED ON PLAN-PROFILE SHEET.
2. LAYERS OF REINFORCING STEEL NEAREST THE INTERIOR AND EXTERIOR SURFACE SHALL HAVE A COVER OF 2" TO THE CENTER OF BARS, UNLESS OTHERWISE NOTED.
3. CONCRETE SHALL BE CLASS "A".

STORMWATER MANHOLE	North Central Texas Council of Governments	STANDARD SPECIFICATION REFERENCE 6.7.	
4', 5', OR 6' SQUARE		DATE NOV. '96	STANDARD DRAWING NO. 6010B

Precast Drainage Structures

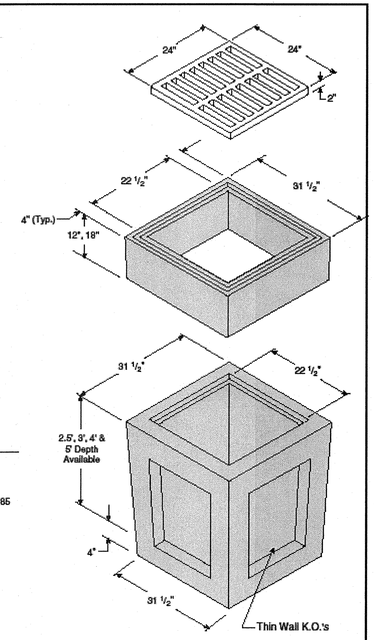

Materials & Features

MAXIMUM PIPE SIZE: 18" I.D. R.C.P.

CONCRETE: 5,000 PSI

REINFORCING: per ASTM A-615 or A-185

CAST IRON FRAME & GRATE per ASTM A 48; Class 30/35

GRATE WEIGHT: 100 Lbs.

CATCH BASIN WEIGHT:
2.5'..... 1,580 Lbs.
3'..... 2,500 Lbs.
4'..... 3,420 Lbs.
5'..... 4,350 Lbs.

EXTENSION WEIGHT:
12" ..... 500 Lbs.
18" ..... 750 Lbs.

-No Scale-
All dimensions subject to allowable specification tolerances.

TITLE	PLANT	STATE	SECTION/PAGE	DATE
#24 Catch Basin	Grand Prairie Houston	TX	8.5	01-25-10

Hanson HEIDELBERGCEMENT Group

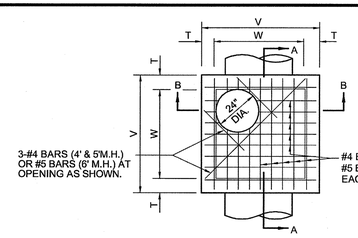

PLAN
N.T.S.

M.H. SIZE(W)	V	T	E	F	G	H
4'	5'-4"	8"	6"	9"	6"	1'-3"
5'	6'-4"	8"	6"	12"	8"	1'-8"
6'	7'-6"	9"	9"	16"	10"	2'-2"

TABLE OF DIMENSIONS
N.T.S.

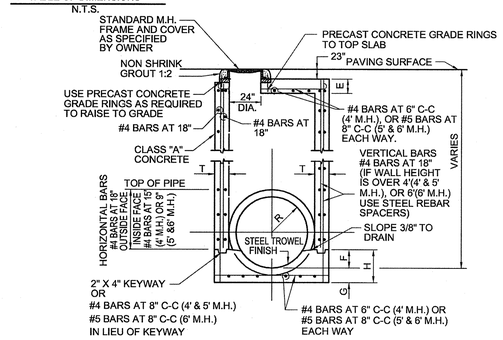

SECTION B-B
N.T.S.

STORMWATER MANHOLE	North Central Texas Council of Governments	STANDARD SPECIFICATION REFERENCE 6.7.	
4', 5', OR 6' SQUARE		DATE NOV. '96	STANDARD DRAWING NO. 6010A

RECORD DRAWING

ALL INFORMATION SHOWN ON THESE PLANS WAS FURNISHED BY THE CONTRACTOR ALL RESPONSIBILITY FOR THE ACCURACY BELONGS TO THE CONTRACTOR.

James Gardella
USA PROFESSIONAL SERVICES GROUP, INC.
DATE: June 16, 2014

REV	DESCRIPTION	DATE

THE CARTER RANCH - PHASE VB
CITY OF CELINA, COLLIN COUNTY, TEXAS

STORM SEWER DETAILS

19 FM LTD.
1221 North Interstate 35, Suite 200
Carrollton, Texas 75006
Phone (469) 892-7200 Fax (469) 892-7201

STATE OF TEXAS
JAMES SCOTT YOUNG
69031
REGISTERED PROFESSIONAL ENGINEER
6/12/13

USA PROFESSIONAL SERVICES GROUP, INC.
TEXAS BOARD OF PROFESSIONAL ENGINEERS REGISTERED ENGINEERING FIRM F-1845
CIVIL ENGINEERS • SURVEYORS
PLANNERS • LANDSCAPE ARCHITECTS
1525 VICEROY DRIVE
DALLAS, TEXAS 75235
(214) 634-3300 FAX (214) 634-3338

DATE: SEPTEMBER 2013
SCALE: NOT TO SCALE
SHEET: 30 OF 31
PROJECT NO. 2009016.04

P:\Sdkwangr\2009016.04\Dwg\ 2009016_04-std.dwg, 11/12/2009 10:46:18 AM, Duc Tran

Utility Placement Detail

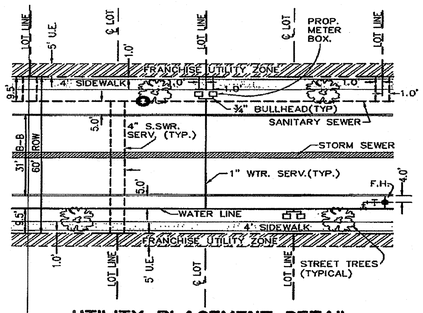

UTILITY PLACEMENT DETAIL
(for lots less than 10,000 S.F.)

Street Pavement Detail

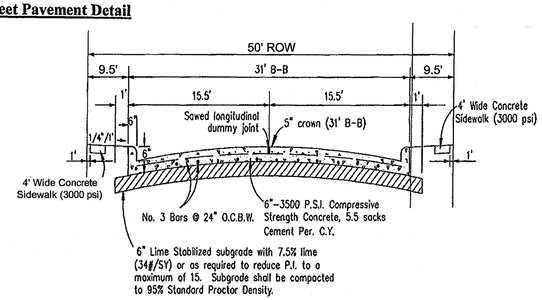

CITY OF CELINA
STREET PAVEMENT DETAIL
(MODIFIED)

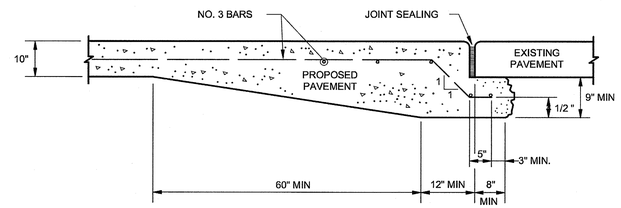

UNDERCUT STREET HEADER DETAIL
NTS

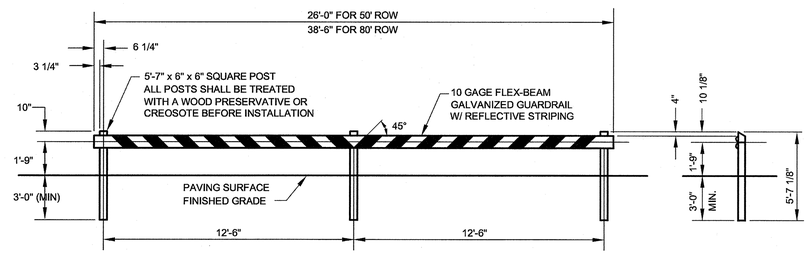

TEMPORARY BARRICADE DETAIL
NTS

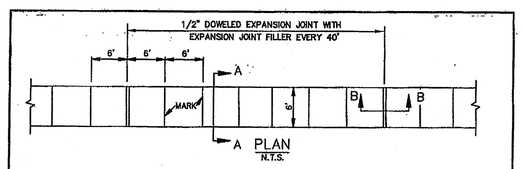

PLAN
N.T.S.

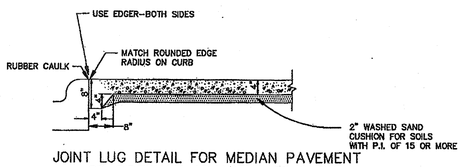

JOINT LUG DETAIL FOR MEDIAN PAVEMENT
OR SIDEWALK ADJACENT TO CURB
N.T.S.

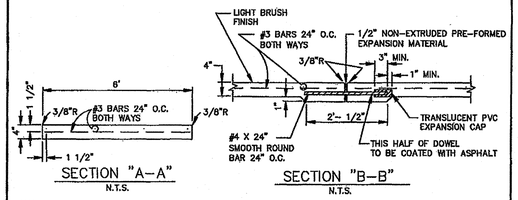

SECTION "A-A"
N.T.S.

SECTION "B-B"
N.T.S.

NOTE:
1. REFER TO STANDARD SPECIFICATION ITEM 305.2 FOR ALTERNATE REINFORCEMENT.
2. CROSS SLOPE OF SIDEWALK SHALL BE ± 1/4" PER FT. MIN. TO ± 3/8" PER FT. MAX.
3. OTHER THAN 6'-0" SIDEWALK WIDTH MAY BE SPECIFIED BY OWNER.
4. SIDEWALK SHALL BE CLASS "A" CONCRETE UNLESS OTHERWISE SPECIFIED BY OWNER.
5. ALL HONEYCOMB IN BACK OF CURB TO BE TROWEL-PLASTERED BEFORE POURING SIDEWALK.
6. LUG MAY BE FORMED BY SHAPING SUBGRADE TO APPROXIMATE DIMENSIONS SHOWN.

REINFORCED CONCRETE SIDEWALKS	North Central Texas Council of Governments	STANDARD SPECIFICATION REFERENCE 305.2	
JOINTS AND SPACING		DATE OCT. '04	STANDARD DRAWING NO. 2170

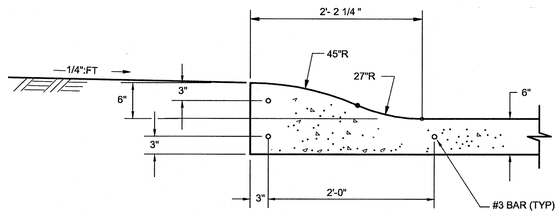

"MODIFIED" MOUNTABLE CURB
NTS

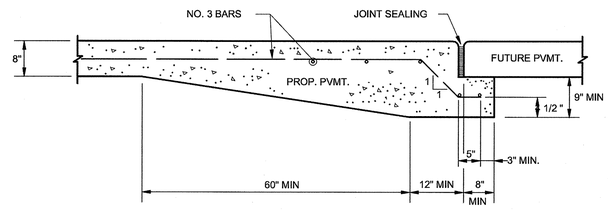

MODIFIED STREET HEADER DETAIL
NTS

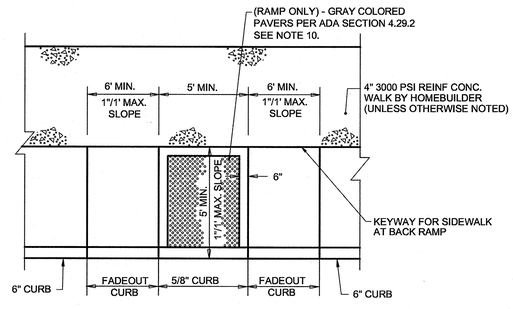

BARRIER FREE RAMP IN STRAIGHT CURB
SIDEWALK ADJACENT TO CURB

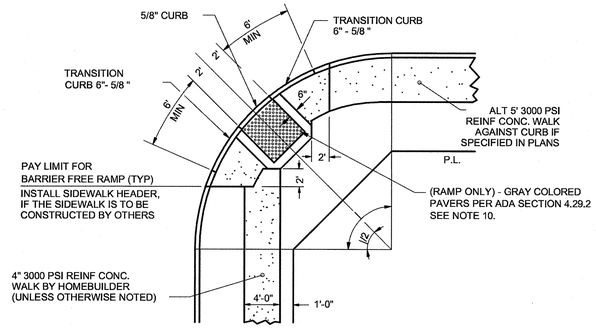

DEPRESSED CURB AT STREET INTERSECTION
NTS

RECORD DRAWING

ALL INFORMATION SHOWN ON THESE PLANS WAS FURNISHED BY THE CONTRACTOR ALL RESPONSIBILITY FOR THE ACCURACY BELONGS TO THE CONTRACTOR.

James Gardella
USA PROFESSIONAL SERVICES GROUP, INC.
DATE: June 16, 2014

REV	DESCRIPTION	DATE

THE CARTER RANCH - PHASE VB
CITY OF CELINA, COLLIN COUNTY, TEXAS

PAVING DETAILS

19 FM LTD.
1221 North Interstate 35, Suite 200
Carrollton, Texas 75006
Phone (469) 892-7200 Fax (469) 892-7201

STATE OF TEXAS
JAMES SCOTT YOUNG
69031
REGISTERED PROFESSIONAL ENGINEER
9/12/13

USA PROFESSIONAL SERVICES GROUP, INC.
TEXAS BOARD OF PROFESSIONAL ENGINEERS REGISTERED ENGINEERING FIRM F-1845
CIVIL ENGINEERS • SURVEYORS
PLANNERS • LANDSCAPE ARCHITECTS
1525 VICEROY DRIVE
DALLAS, TEXAS 75235
(214) 634-3300 FAX (214) 634-3338

DATE: SEPTEMBER 2013
SCALE: NOT TO SCALE
SHEET: 31 OF 31
PROJECT NO. 2009016.04

P:\Sidewalk\2009016.04\Dwg\ 2009016_04-pv1.dwg, 11/12/2009 10:46:18 AM Duc-Tam

GRAPHIC SCALE

30 0 15 30 60 120

(IN FEET)
1 inch = 30 ft.

This plan was developed directly from the USA Professional Services Group, Inc. sheet 17 dated November 2012. This plan is for the sole purpose of showing what retaining wall sections to use where and to comment on the site as necessary with regards to the retaining walls.

NOTES:

FOR ALL WALLS SEE RW2 UNLESS NOTED OTHERWISE.

FOR RW2 AND RW3 SHEETS A DESIGN HAS BEEN PROVIDED FOR BOTH CASES WITH AND WITHOUT A WOOD FENCE PLACED IN THE CAP OF THE WALL. THE CONTRACTOR SHALL COORDINATE WITH THE DEVELOPER ON THE LOCATIONS WHERE WOOD FENCE WILL BE REQUIREDIN THE RETAINING WALLS, AND BUILD THE APPROPRIATE WALL DETAIL.

LEGEND

SYMBOL	DISCRIPTION
D	DRIVEWAY
F	FINISH GRADE
TC	TOP OF CURB
TW	TOP OF WALL
BW	BOTTOM OF WALL
FP	FINISH PAD
	FLOW ARROW
471	PROPOSED CONTOURS
471	EXISTING CONTOURS
	PROPOSED STORM SEWER
	RETAINING WALL

RECORD DRAWING

ALL INFORMATION SHOWN ON THESE PLANS WAS FURNISHED BY THE CONTRACTOR ALL RESPONSIBILITY FOR THE ACCURACY BELONGS TO THE CONTRACTOR.

James Gardella
USA PROFESSIONAL SERVICES GROUP, INC.
DATE: June 16, 2014

BENCHMARKS

NO.	DATE	REVISION	BY

	DATE	BY
DES.	05-08-13	AMB
DRN.	05-08-13	AMB
CHK.	05-08-13	TJW

FALKOFSKE ENGINEERING, INC.
Structural Engineering Consultants
Texas Registered Engineering Firm: # F-4038
1414 West Randol Mill Road
Suite 201
Arlington, Texas 76012
Metro (817) 261-8300

The use of these plans and specifications is restricted to the original site for which they were prepared, and publication is expressly limited to such use. Reproduction, publication or disclosure by any method, in whole or in part, is prohibited. These drawings and specifications remain the property of the author and title remains in FALKOFSKE ENGINEERING.

SITE PLAN
CARTER RANCH 5A & 5B
CELINA, TEXAS

RPM xCONSTRUCTION, LLC
PLANO, TEXAS

STATE OF TEXAS
AARON M. BERKES
107154
REGISTERED PROFESSIONAL ENGINEER
5-8-13

JOB NO. 163.13

SP1

RECORD DRAWING

ALL INFORMATION SHOWN ON THESE PLANS WAS FURNISHED BY THE CONTRACTOR ALL RESPONSIBILITY FOR THE ACCURACY BELONGS TO THE CONTRACTOR.

James Gardella
USA PROFESSIONAL SERVICES GROUP, INC.
DATE: June 16, 2014

GRAPHIC SCALE

30 0 15 30 60 120

(IN FEET)
1 inch = 30 ft.

This plan was developed directly from the USA Professional Services Group, Inc. sheet 18 dated November 2012. This plan is for the sole purpose of showing what retaining wall sections to use where and to comment on the site as necessary with regards to the retaining walls.

NOTES:

FOR ALL WALLS SEE RW2 UNLESS NOTED OTHERWISE.

FOR RW2 AND RW3 SHEETS A DESIGN HAS BEEN PROVIDED FOR BOTH CASES WITH AND WITHOUT A WOOD FENCE PLACED IN THE CAP OF THE WALL. THE CONTRACTOR SHALL COORDINATE WITH THE DEVELOPER ON THE LOCATIONS WHERE WOOD FENCE WILL BE REQUIREDIN THE RETAINING WALLS, AND BUILD THE APPROPRIATE WALL DETAIL.

LEGEND

SYMBOL	DISCRIPTION
D	DRIVEWAY
F	FINISH GRADE
TC	TOP OF CURB
TW	TOP OF WALL
BW	BOTTOM OF WALL
FP	FINISH PAD
←	FLOW ARROW
471	PROPOSED CONTOURS
471	EXISTING CONTOURS
	PROPOSED STORM SEWER
	RETAINING WALL

BENCHMARKS

BM #1= Centerline of existing sanitary manhole at the centerline intersection

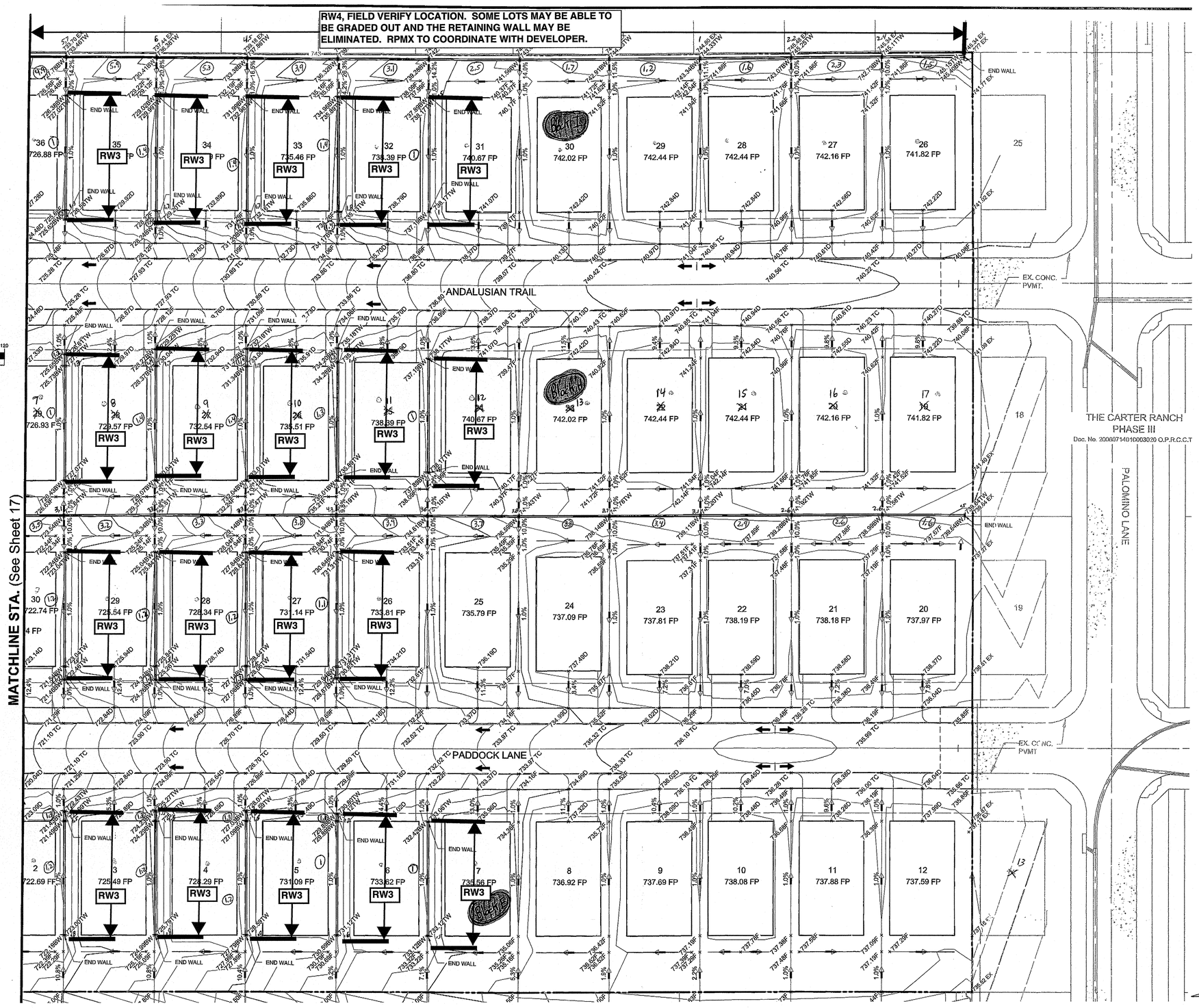

NO.	DATE	REVISION	BY

	DATE	BY
DES.	05-08-13	AMB
DRN.	05-08-13	AMB
CHK.	05-08-13	TJW

FALKOFSKE ENGINEERING, INC.
Structural Engineering Consultants
Texas Registered Engineering Firm: # F-4038
1414 West Randol Mill Road
Suite 201
Arlington, Texas 76012
Metro (817) 261-8300

The use of these plans and specifications shall be restricted to the original site for which they were prepared, and publication thereof is expressly limited to such use. Reproduction or publication or disclosure by any method, in whole or in part, is prohibited. These drawings and specifications remain the property of the undersigned and title remains in FALKOFSKE ENGINEERING.

SITE PLAN
CARTER RANCH 5A & 5B
CELINA, TEXAS

RPM xCONSTRUCTION, LLC
PLANO, TEXAS

STATE OF TEXAS
AARON M. BERKES
107154
LICENSED
PROFESSIONAL ENGINEER
5-8-13

JOB NO. 163.13

SP2

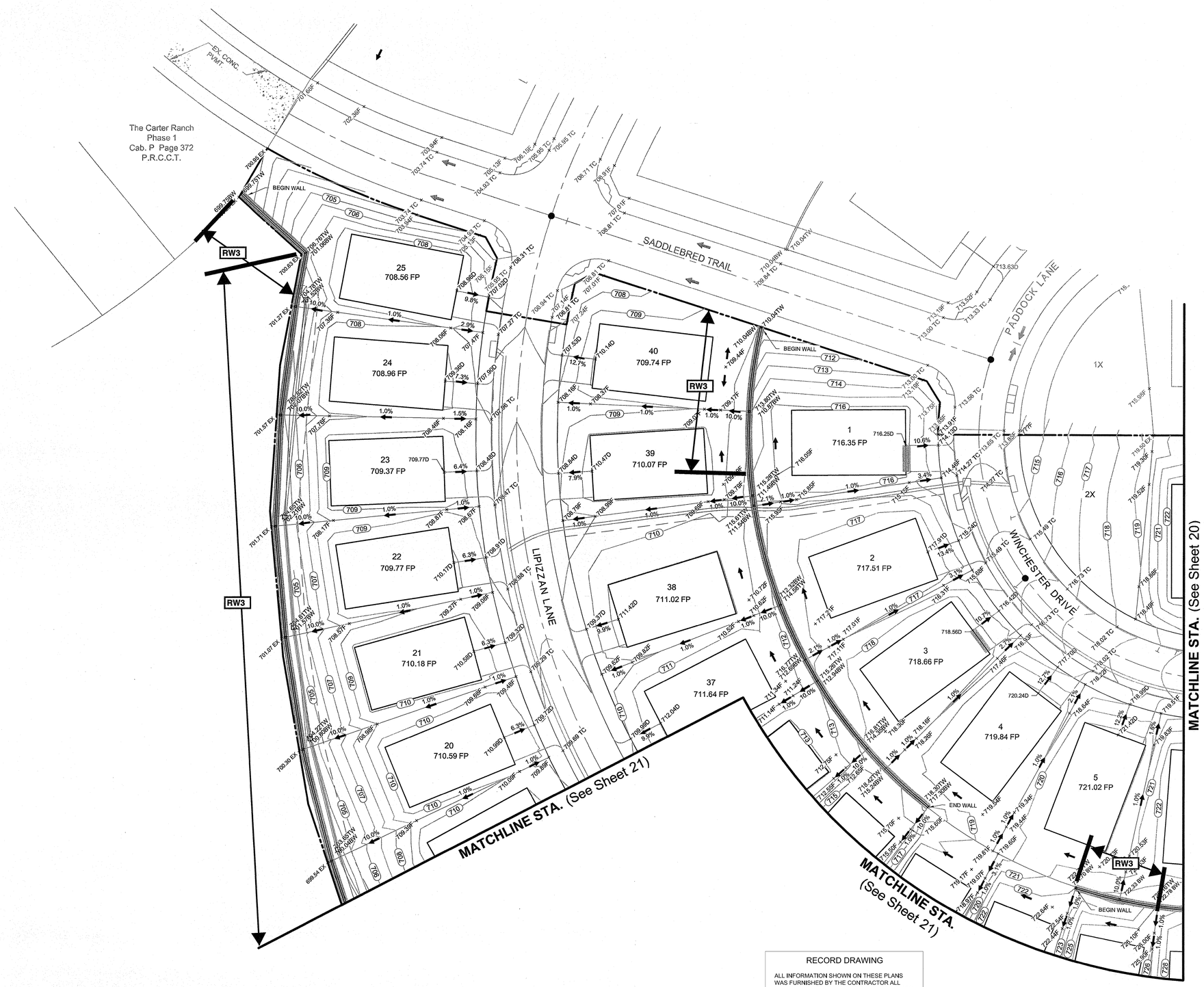

GRAPHIC SCALE

30 0 15 30 60 120

(IN FEET)
1 inch = 30 ft.

This plan was developed directly from the USA Professional Services Group, Inc. sheet 19 dated May 2013. This plan is for the sole purpose of showing what retaining wall sections to use where and to comment on the site as necessary with regards to the retaining walls.

NOTES:

FOR ALL WALLS SEE RW2 UNLESS NOTED OTHERWISE.

FOR RW2 AND RW3 SHEETS A DESIGN HAS BEEN PROVIDED FOR BOTH CASES WITH AND WITHOUT A WOOD FENCE PLACED IN THE CAP OF THE WALL. THE CONTRACTOR SHALL COORDINATE WITH THE DEVELOPER ON THE LOCATIONS WHERE WOOD FENCE WILL BE REQUIREDIN THE RETAINING WALLS, AND BUILD THE APPROPRIATE WALL DETAIL.

LEGEND

SYMBOL	DISCRIPTION
D	DRIVEWAY
F	FINISH GRADE
TC	TOP OF CURB
TW	TOP OF WALL
BW	BOTTOM OF WALL
FP	FINISH PAD
←	FLOW ARROW
471	PROPOSED CONTOURS
471	EXISTING CONTOURS
	PROPOSED STORM SEWER
	RETAINING WALL
	RETAINING WALL SHADING

BENCHMARKS

TBM #1= Centerline of existing sanitary manhole at the centerline intersection of Appaloosa Lane and Equine Lane located in "The Carter Ranch Phase IIA". Elevation = 687.57'feet

TBM #2 = "X" Found in concrete at the centerline intersection of Equine Lane and Old Stables Drive located in "The Carter Ranch Phase IIA". Elevation =728.63'feet

CM #5 = Concrete monument with 5/8 inch iron rod with cap stamped "Huitt-Zollars" at the Southeast corner of the intersection of State Highway 289 and County Road 88, located approximately 45' feet South of the centerline of County Road 88 and 112' feet East of the centerline of State Highway 289 Elevation = 681.76' feet

RECORD DRAWING

ALL INFORMATION SHOWN ON THESE PLANS WAS FURNISHED BY THE CONTRACTOR ALL RESPONSIBILITY FOR THE ACCURACY BELONGS TO THE CONTRACTOR.

James Gardella
USA PROFESSIONAL SERVICES GROUP, INC.
DATE: June 16, 2014

NO.	DATE	REVISION	BY

	DATE	BY
DES.	05-08-13	AMB
DRN.	05-08-13	AMB
CHK.	05-08-13	TJW

FALKOFSKE ENGINEERING, INC.
Structural Engineering Consultants
Texas Registered Engineering Firm: # F-4038
1414 West Randol Mill Road
Suite 201
Arlington, Texas 76012
Metro (817) 261-8300

The use of these plans and specifications shall be restricted to the original site for which they were prepared. Any reproduction or distribution is expressly limited to such use. Any other reproduction, reuse, or disclosure by any method, in whole, or in part, is prohibited. These drawings and specifications contain proprietary information and title remains in FALKOFSKE ENGINEERING.

SITE PLAN
CARTER RANCH 5A & 5B
CELINA, TEXAS

RPM xCONSTRUCTION, LLC
PLANO, TEXAS

STATE OF TEXAS
AARON M. BERKES
107154
LICENSED PROFESSIONAL ENGINEER
5-8-13

JOB NO. 163.13

SP3

P:\Sdskengn\2009016.04\Dwg\2009016_04-gr_recover.dwg, Layout1, 5/2/2013 9:27:53 AM, David Locklear

GRAPHIC SCALE

30 0 15 30 60 120

(IN FEET)
1 inch = 30 ft.

This plan was developed directly from the USA Professional Services Group, Inc. sheet 20 dated May 2013. This plan is for the sole purpose of showing what retaining wall sections to use where and to comment on the site as necessary with regards to the retaining walls.

NOTES:

FOR ALL WALLS SEE RW2 UNLESS NOTED OTHERWISE.

FOR RW2 AND RW3 SHEETS A DESIGN HAS BEEN PROVIDED FOR BOTH CASES WITH AND WITHOUT A WOOD FENCE PLACED IN THE CAP OF THE WALL. THE CONTRACTOR SHALL COORDINATE WITH THE DEVELOPER ON THE LOCATIONS WHERE WOOD FENCE WILL BE REQUIREDIN THE RETAINING WALLS, AND BUILD THE APPROPRIATE WALL DETAIL.

LEGEND

SYMBOL	DISCRIPTION
D	DRIVEWAY
F	FINISH GRADE
TC	TOP OF CURB
TW	TOP OF WALL
BW	BOTTOM OF WALL
FP	FINISH PAD
←	FLOW ARROW
471	PROPOSED CONTOURS
471	EXISTING CONTOURS
	PROPOSED STORM SEWER
	RETAINING WALL
	RETAINING WALL SHADING

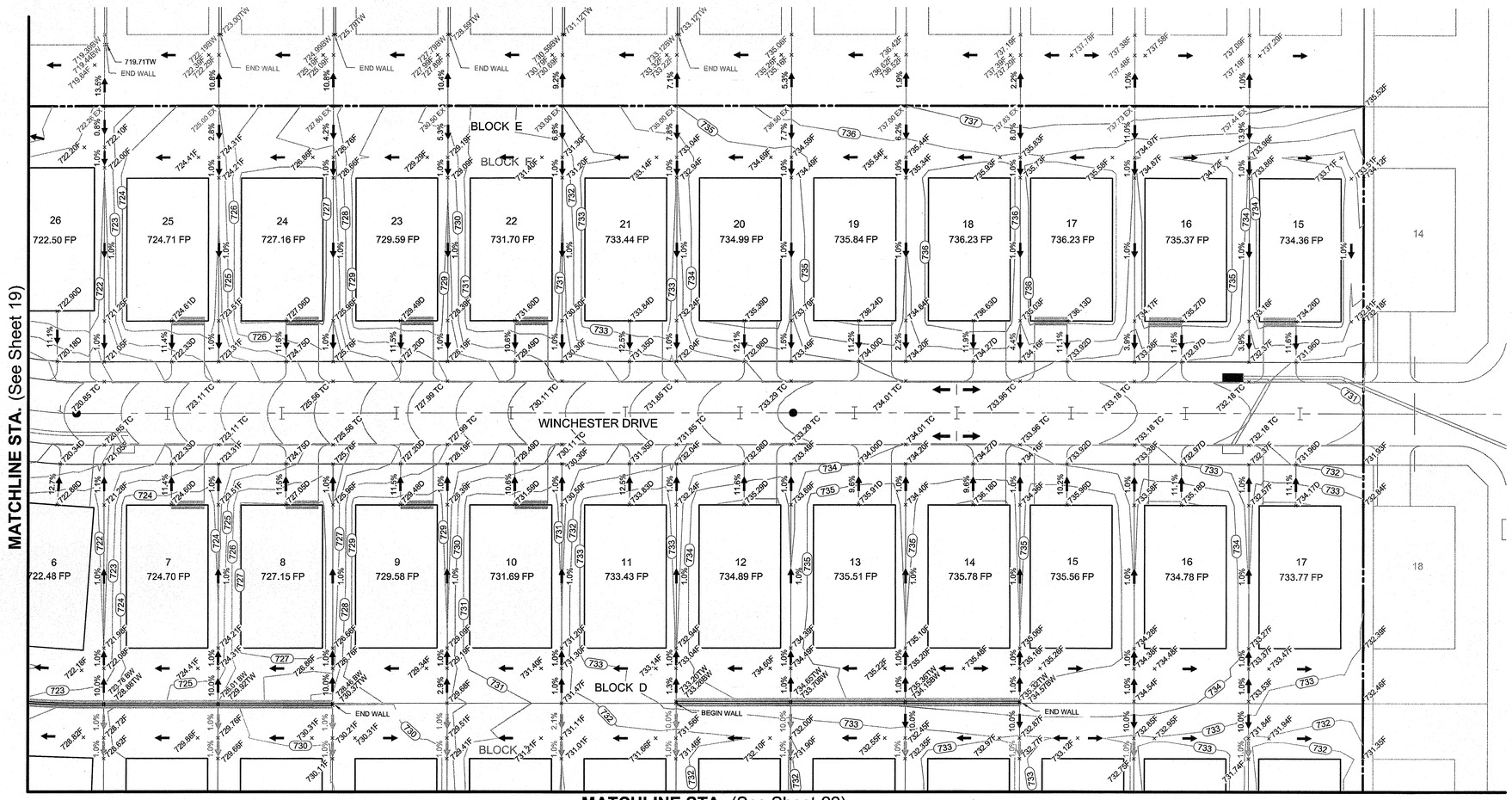

BENCHMARKS

TBM #1= Centerline of existing sanitary manhole at the centerline intersection of Appaloosa Lane and Equine Lane located in "The Carter Ranch Phase IIA". Elevation = 687.57'feet

TBM #2 = "X" Found in concrete at the centerline intersection of Equine Lane and Old Stables Drive located in "The Carter Ranch Phase IIA". Elevation =728.63'feet

CM #5 = Concrete monument with 5/8 inch iron rod with cap stamped "Huitt-Zollars" at the Southeast corner of the intersection of State Highway 289 and County Road 88, located approximately 45' feet South of the centerline of County Road 88 and 112' feet East of the centerline of State Highway 289 Elevation = 681.76' feet

RECORD DRAWING

ALL INFORMATION SHOWN ON THESE PLANS WAS FURNISHED BY THE CONTRACTOR ALL RESPONSIBILITY FOR THE ACCURACY BELONGS TO THE CONTRACTOR.

James Gardella
USA PROFESSIONAL SERVICES GROUP, INC.
DATE: June 16, 2014

NO.	DATE	REVISION	BY

	DATE	BY
DES.	05-08-13	AMB
DRN.	05-08-13	AMB
CHK.	05-08-13	TJW

FALKOFSKE ENGINEERING, INC.
Structural Engineering Consultants
Texas Registered Engineering Firm: # F-4038
1414 West Randol Mill Road
Suite 201
Arlington, Texas 76012
Metro (817) 261-8300

The use of these plans and specifications shall be restricted to the original site for which they were prepared. Any reproduction or distribution is expressly limited to such use. Any other reproduction, reuse, or disclosure by any method, in whole, or in part, is prohibited. These drawings and specifications contain proprietary information and title remains in FALKOFSKE ENGINEERING.

SITE PLAN
CARTER RANCH 5A & 5B
CELINA, TEXAS

RPM xCONSTRUCTION, LLC
PLANO, TEXAS

STATE OF TEXAS
AARON M. BERKES
107154
LICENSED
PROFESSIONAL ENGINEER
5-8-13

JOB NO. 163.13

SP4

P:\Sdskengn\2009016.04\Dwg\ 2009016_04-gr_recover.dwg , Layout2, 5/2/2013 9:30:21 AM, David Locklear

GRAPHIC SCALE

30 0 15 30 60 120

(IN FEET)
1 inch = 30 ft.

This plan was developed directly from the USA Professional Services Group, Inc. sheet 21 dated May 2013. This plan is for the sole purpose of showing what retaining wall sections to use where and to comment on the site as necessary with regards to the retaining walls.

NOTES:

FOR ALL WALLS SEE RW2 UNLESS NOTED OTHERWISE.

FOR RW2 AND RW3 SHEETS A DESIGN HAS BEEN PROVIDED FOR BOTH CASES WITH AND WITHOUT A WOOD FENCE PLACED IN THE CAP OF THE WALL. THE CONTRACTOR SHALL COORDINATE WITH THE DEVELOPER ON THE LOCATIONS WHERE WOOD FENCE WILL BE REQUIREDIN THE RETAINING WALLS, AND BUILD THE APPROPRIATE WALL DETAIL.

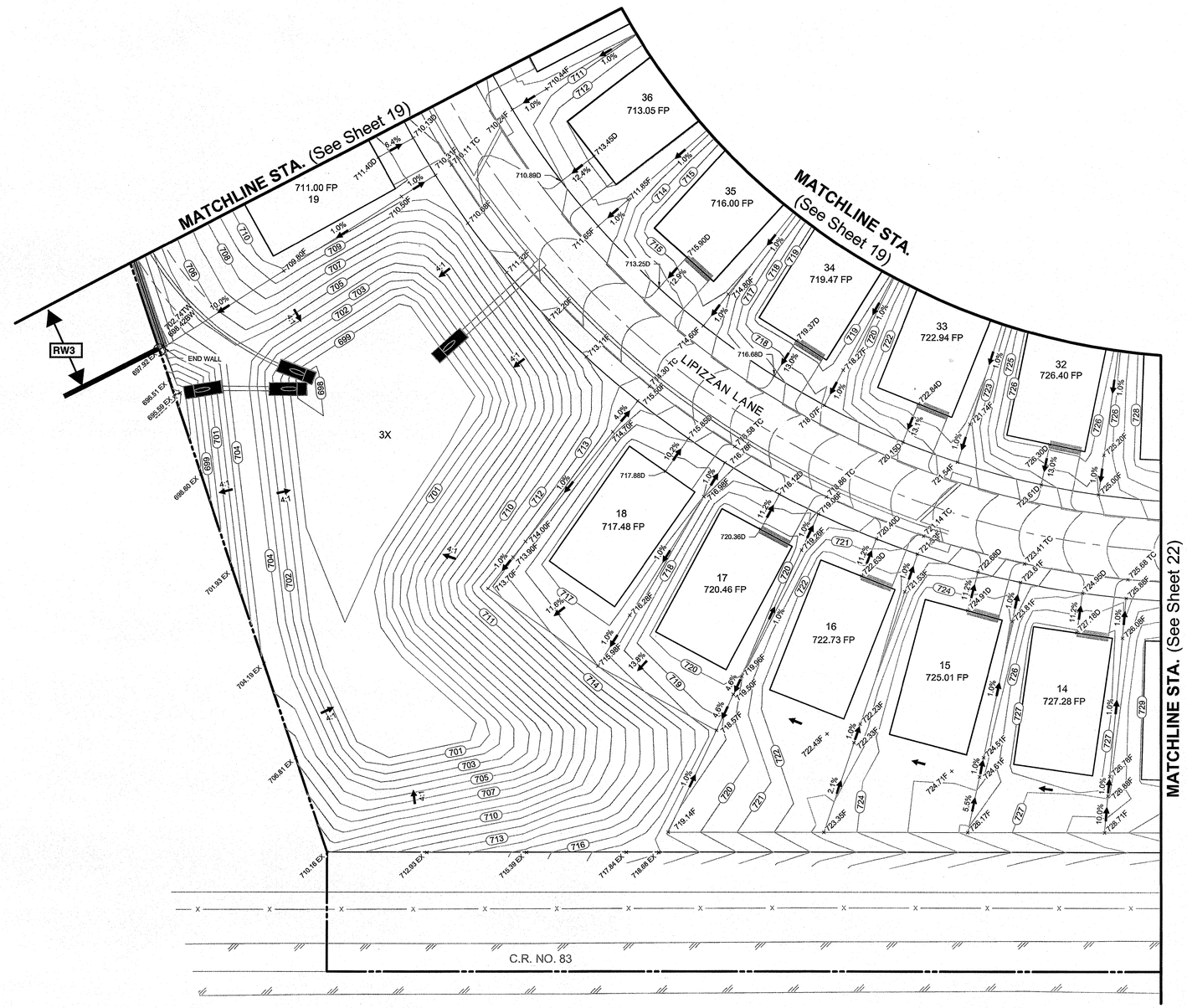

LEGEND

SYMBOL	DISCRIPTION
D	DRIVEWAY
F	FINISH GRADE
TC	TOP OF CURB
TW	TOP OF WALL
BW	BOTTOM OF WALL
FP	FINISH PAD
	FLOW ARROW
471	PROPOSED CONTOURS
471	EXISTING CONTOURS
	PROPOSED STORM SEWER
	RETAINING WALL
	RETAINING WALL SHADING

BENCHMARKS

TBM #1= Centerline of existing sanitary manhole at the centerline intersection of Appaloosa Lane and Equine Lane located in "The Carter Ranch Phase IIA". Elevation = 687.57'feet

TBM #2 = "X" Found in concrete at the centerline intersection of Equine Lane and Old Stables Drive located in "The Carter Ranch Phase IIA". Elevation =728.63'feet

CM #5 = Concrete monument with 5/8 inch iron rod with cap stamped "Huitt-Zollars" at the Southeast corner of the intersection of State Highway 289 and County Road 88, located approximately 45' feet South of the centerline of County Road 88 and 112' feet East of the centerline of State Highway 289 Elevation = 681.76' feet

RECORD DRAWING

ALL INFORMATION SHOWN ON THESE PLANS WAS FURNISHED BY THE CONTRACTOR ALL RESPONSIBILITY FOR THE ACCURACY BELONGS TO THE CONTRACTOR.

James Gardella
USA PROFESSIONAL SERVICES GROUP, INC.
DATE: June 16, 2014

NO.	DATE	REVISION	BY

	DATE	BY
DES.	05-08-13	AMB
DRN.	05-08-13	AMB
CHK.	05-08-13	TJW

FALKOFSKE ENGINEERING, INC.
Structural Engineering Consultants
Texas Registered Engineering Firm: # F-4038
1414 West Randol Mill Road
Suite 201
Arlington, Texas 76012
Metro (817) 261-8300

The use of these plans and specifications shall be restricted to the original site for which they were prepared, and any reproduction or distribution is forbidden without written consent. Any other reproduction, trace, or photo, or by print, reproduction, tracing, drawings and specifications or any part thereof, without written consent is prohibited. Title remains in FALKOFSKE ENGINEERING.

SITE PLAN
CARTER RANCH 5A & 5B
CELINA, TEXAS

RPM xCONSTRUCTION, LLC
PLANO, TEXAS

STATE OF TEXAS
AARON M. BERKES
107154
LICENSED
PROFESSIONAL ENGINEER
5-8-13

JOB NO. 163.13

SP5

F:\Sdskergn\2009016.04\Dwg\2009016_04-gr.dwg, Layout3, 5/2/2013 9:49:24 AM, David Lockler

GRAPHIC SCALE

30 0 15 30 60 120

(IN FEET)
1 inch = 30 ft.

This plan was developed directly from the USA Professional Services Group, Inc. sheet 22 dated May 2013. This plan is for the sole purpose of showing what retaining wall sections to use where and to comment on the site as necessary with regards to the retaining walls.

NOTES:

FOR ALL WALLS SEE RW2 UNLESS NOTED OTHERWISE.

FOR RW2 AND RW3 SHEETS A DESIGN HAS BEEN PROVIDED FOR BOTH CASES WITH AND WITHOUT A WOOD FENCE PLACED IN THE CAP OF THE WALL. THE CONTRACTOR SHALL COORDINATE WITH THE DEVELOPER ON THE LOCATIONS WHERE WOOD FENCE WILL BE REQUIREDIN THE RETAINING WALLS, AND BUILD THE APPROPRIATE WALL DETAIL.

LEGEND

SYMBOL	DISCRIPTION
D	DRIVEWAY
F	FINISH GRADE
TC	TOP OF CURB
TW	TOP OF WALL
BW	BOTTOM OF WALL
FP	FINISH PAD
←	FLOW ARROW
471	PROPOSED CONTOURS
471	EXISTING CONTOURS
	PROPOSED STORM SEWER
	RETAINING WALL
	RETAINING WALL SHADING

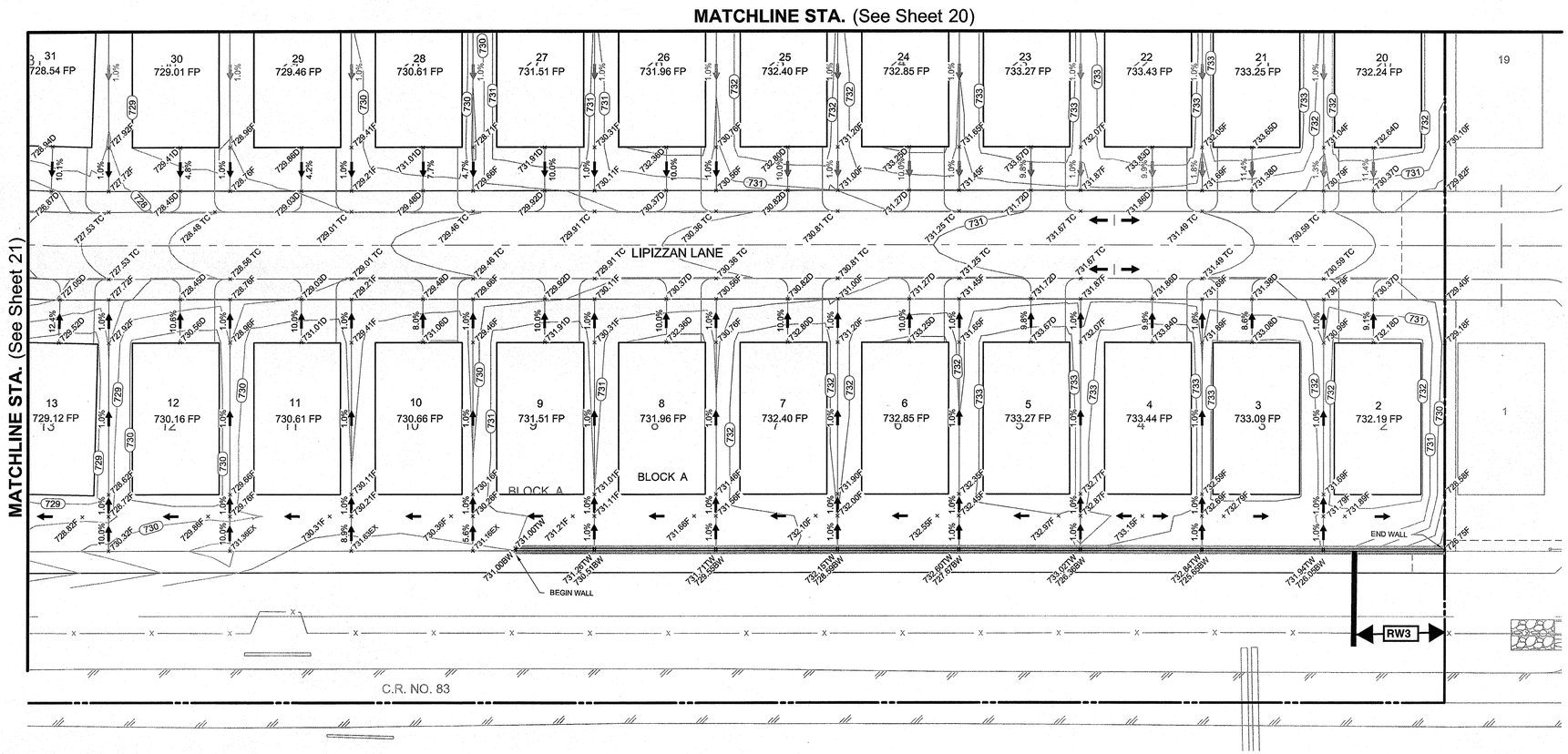

BENCHMARKS

TBM #1= Centerline of existing sanitary manhole at the centerline intersection of Appaloosa Lane and Equine Lane located in "The Carter Ranch Phase IIA". Elevation = 687.57'feet

TBM #2 = "X" Found in concrete at the centerline intersection of Equine Lane and Old Stables Drive located in "The Carter Ranch Phase IIA". Elevation =728.63'feet

CM #5 = Concrete monument with 5/8 inch iron rod with cap stamped "Huitt-Zollars" at the Southeast corner of the intersection of State Highway 289 and County Road 88, located approximately 45' feet South of the centerline of County Road 88 and 112' feet East of the centerline of State Highway 289 Elevation = 681.76' feet

RECORD DRAWING

ALL INFORMATION SHOWN ON THESE PLANS WAS FURNISHED BY THE CONTRACTOR ALL RESPONSIBILITY FOR THE ACCURACY BELONGS TO THE CONTRACTOR.

James Gardella
USA PROFESSIONAL SERVICES GROUP, INC.
DATE: June 16, 2014

NO.	DATE	REVISION	BY

	DATE	BY
DES.	05-08-13	AMB
DRN.	05-08-13	AMB
CHK.	05-08-13	TJW

FALKOFSKE ENGINEERING, INC.
Structural Engineering Consultants
Texas Registered Engineering Firm: # F-4038
1414 West Randol Mill Road
Suite 201
Arlington, Texas 76012
Metro (817) 261-8300

The use of these plans and specifications shall be restricted to the original site for which they were prepared. Any reproduction or distribution is expressly limited to such use. Any other reproduction, reuse, or disclosure by any method, in whole, or in part, is prohibited. These drawings and specifications contain proprietary information and title remains in FALKOFSKE ENGINEERING.

SITE PLAN
CARTER RANCH 5A & 5B
CELINA, TEXAS

RPM xCONSTRUCTION, LLC
PLANO, TEXAS

STATE OF TEXAS
AARON M. BERKES
107154
LICENSED
PROFESSIONAL ENGINEER
5-8-13

JOB NO. 163.13

SP6

P:\Sdskengn\2009016.04\Dwg\2009016_04-gr.dwg, Layout4, 5/2/2013 1:50:58 PM, David Locklear

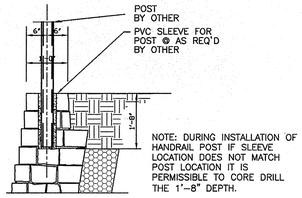

1 RW1 WALL SECTION W/HANDRAIL POST
CONTRACTOR OPTION

N.T.S.

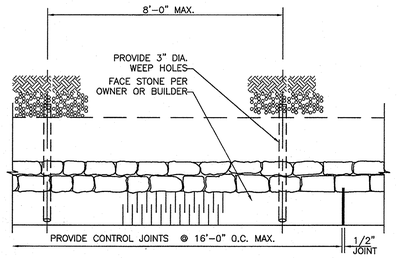

2 RW1 TYPICAL PLAN VIEW AT BASE

N.T.S.

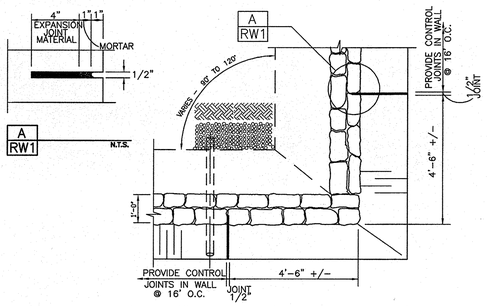

3 RW1 TYPICAL PLAN VIEW AT CORNERS

N.T.S.

RECORD DRAWING

ALL INFORMATION SHOWN ON THESE PLANS WAS FURNISHED BY THE CONTRACTOR ALL RESPONSIBILITY FOR THE ACCURACY BELONGS TO THE CONTRACTOR.

James Gardella
USA PROFESSIONAL SERVICES GROUP, INC.
DATE: June 16, 2014

1. Design Building Code

International Building Code, 2009 Edition

2. Geotechnical Report

Firm: JRB ENGINEERING, INC.
Report No. 12-15659 Dated: DECEMBER 27, 2012
Allowable Bearing Capacity 1500 psf, 2500 psf, 4000 psf

Note:
All of the above noted bearing capacities are anticipated throughout the site. Each wall section has a design for multiple bearing capacity options. It will be field verified which bearing condition to use based on the conditions of the soil at the base of the wall during excavation. If the bearing capacity changes along the length of the retaining wall it is permitted to change bearing capacity designs as needed.

3. Geotechnical Criteria

Bearing on Stiff Natural Undisturbed Clayey Soils or Compacted and Tested Soils

Allowable Bearing = 1500 psf, min.
Friction Angle between Base of Wall and Soil - 17 deg

Backfill Soil Parameters:
Backfill Soil - Natural Clays or Fill Soils
Backfill Angle of Internal Friction PHI = 28 deg

Backfill Soil - Gravel or Stone
Backfill Angle of Internal Friction PHI = 35 deg

Base Soil Parameters:
Soil at Toe - Natural, Undisturbed or Fill Soils
Angle of Internal Friction PHI = 28 deg

Bearing on Hard Natural Undisturbed Clayey Soils

Allowable Bearing = 2500 psf, min.
Friction Angle Between Base of Wall and Soil - 19 deg

Backfill Soil Parameters:
Backfill Soil - Natural Clays or Fill Soils
Backfill Angle of Internal Friction PHI = 28 deg

Backfill Soil Parameters:
Backfill Soil - Free Draining Gravel
Backfill Angle of Internal Friction PHI = 35 deg

Base Soil Parameters:
Soil at Toe - Natural, Undisturbed Soils
Angle of Internal Friction PHI = 28 deg

Bearing on Bedrock

Allowable Bearing = 4000 psf, min.
Friction Angle Between Base of Wall and Soil - 23 deg

Backfill Soil Parameters:
Backfill Soil - Natural Clays or Fill Soils
Backfill Angle of Internal Friction PHI = 28 deg

Backfill Soil Parameters:
Backfill Soil - Free Draining Gravel
Backfill Angle of Internal Friction PHI = 28 deg

Base Soil Parameters:
Soil at Toe - Bedrock, Passive = 400 psf

The use of heavy equipment within 3'-0" of the wall could damage the wall and should be avoided.

Locate base of walls on undisturbed or properly compacted soil.

4. Materials:

Rock for Wall Construction:

Average density of masonry stone wall varies from 135 pcf to 145 pcf. Size of stone within wall varies from 4" to 18". Crushed concrete is acceptable to be used in the wall construction in place of natural stone. Face stone to be coordinated between contractor and owner/developer.

Drainage Zone Materials:

Drainage zone materials may be composed of clean gravel or stone ranging from 1" to 5". Crushed concrete is acceptable provided it is clean and generally free of dust or other deleterious materials. Drainage zone shall be wrapped with filter fabric. Filter fabric shall be Mirafi 140N or approved equal.

Portland Cement Mortar for Retaining Wall Construction.

The portland cement mortar used for construction of the masonry stone retaining walls shall be provided with the following proportions per cubic yard of concrete. The portland cement mortar supplier shall provide "batch tickets" clearly indicating that the appropriate amount of materials are provided in each concrete mixer truck load. The batch tickets shall clearly indicate the amount batched, the date, the project name and shall be provided to Falkofske Engineering, Inc. for review, documentation, and file.

Contents	Amount per cubic yard	
Type 1 Portland cement:	414	lbs
Type F Fly Ash	103	lbs
Fine Aggregate (sand):	2987	lbs
Sika-Air	2	oz
Plastiment ES	20.6	oz
Sikament 686	15.5	oz
Potable Water	258	lbs

Concrete retarders may be used at the discretion of the masonry wall contractor. A greater amount of retarder is typically used during hot periods and a less amount of retarder is typically used during cool weather.

Please note that the above proportions will provide a portland cement mortar with a compressive strength of about f'c = 2000 psi. Falkofske Engineering, Inc. does not require any concrete testing provided the above proportions are verified by way of the "batch tickets".

5. Construction Reviews

Falkofske Engineering, Inc. shall be called for construction review of masonry wall.

6. Retaining Wall Design Constraints

Retaining walls should not have solid fence placed on top of wall other than that shown on these plans.
Retaining walls shall not have additional surcharge placed above wall other than that shown on these plans.
Retaining walls shall not have slope at base or top of wall that exceed that which is shown on these plans.
The retaining walls noted above require special design.

Minor variations in the construction of the retaining walls from these documents may be accepted at the discretion of the design engineer.

NO.	DATE	REVISION	BY

	DATE	BY
DES.	05-08-13	AMB
DRN.	05-08-13	AMB
CHK.	05-08-13	TJW

FALKOFSKE ENGINEERING, INC.
Structural Engineering Consultants
Texas Registered Engineering Firm: # F-4038
1414 West Randol Mill Road
Suite 201
Arlington, Texas 76012
Metro (817) 261-8300

The use of these plans and specifications shall be restricted to the original site for which they were prepared. Any other reproduction or use is expressly limited by such use. Any reproduction, publication or disclosure by any method, in whole or in part, is prohibited. These drawings and specifications remain the property of FALKOFSKE ENGINEERING.

MASONRY RETAINING WALLS - NOTES & STANDARD DETAILS
CARTER RANCH 5A & 5B
CELINA, TEXAS

RPM xCONSTRUCTION, LLC
PLANO, TEXAS

STATE OF TEXAS
AARON M. BERKES
107154
LICENSED
PROFESSIONAL ENGINEER
SBB

JOB NO. 163.13

RW1

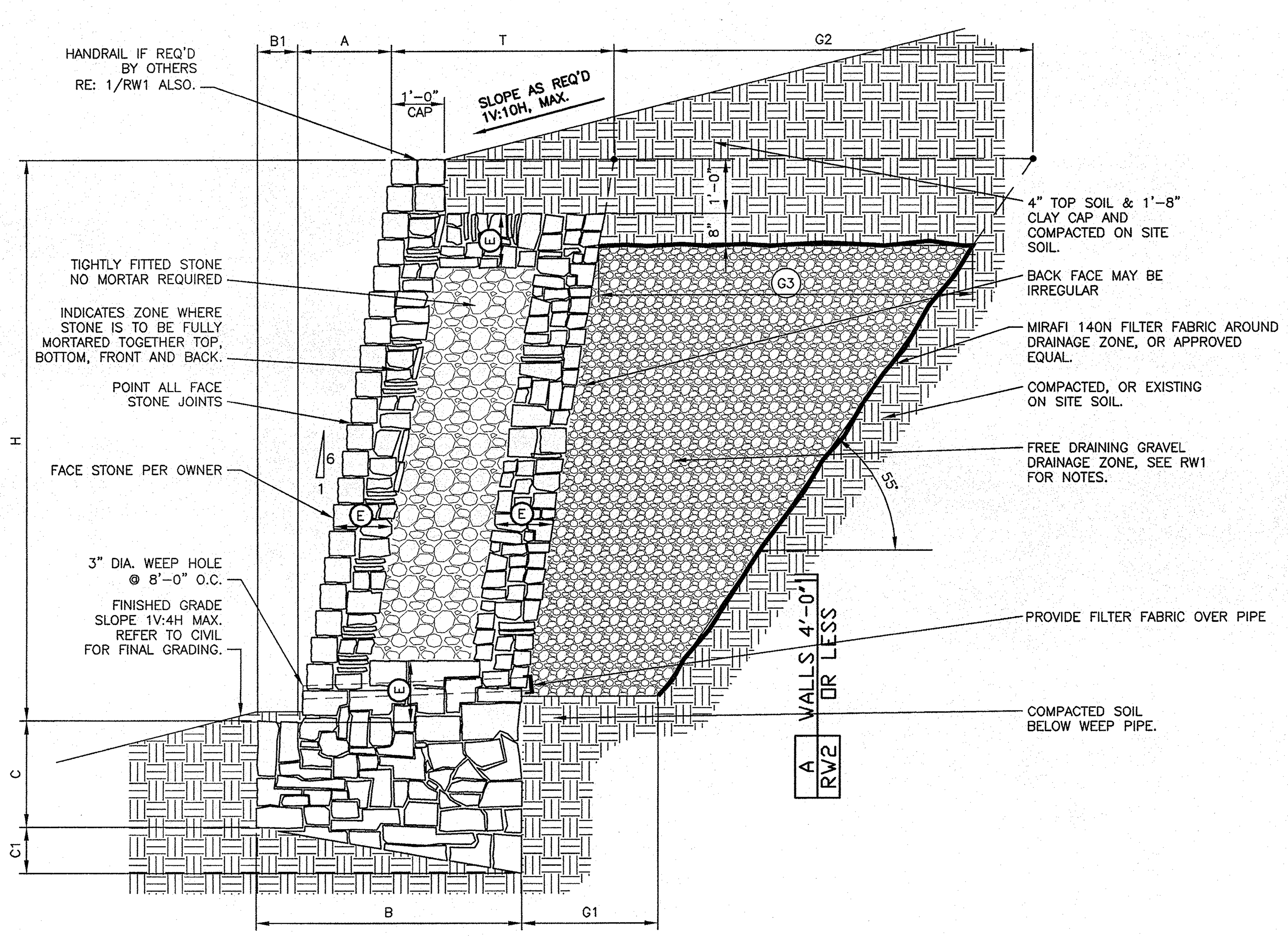

MASONRY WALL SCHEDULE 1500 psf – BEARING CAPACITY (STIFF NATURAL UNDISTURBED SOILS OR COMPACTED AND TESTED SOILS SEE GENERAL NOTES SHEET RW1)												
WALL HEIGHT H	BASE WIDTH B	TOE B1	BASE DEPTH (TOE) C	BASE DEPTH (HEEL) C1	BATTER A	FULLY MORTARED ZONE E	THICKNESS OF WALL T	GRAVEL (BOTTOM) G1	GRAVEL (TOP) G2	GRAVEL G3	VOLUME GRAVEL cf/ft	BEARING CAPACITY
1'-0"	1'-0"	0'-0"	0'-6"	0'-2"	0'-2"	FULLY MORTARED	1'-0"	SEE A/RW2	SEE A/RW2	SEE A/RW2	N/A	1500 psf
2'-0"	1'-2"	0'-2"	0'-9"	0'-3"	0'-4"	FULLY MORTARED	1'-0"	SEE A/RW2	SEE A/RW2	SEE A/RW2	N/A	
3'-0"	1'-8"	0'-4"	0'-9"	0'-4"	0'-6"	FULLY MORTARED	1'-4"	SEE A/RW2	SEE A/RW2	SEE A/RW2	N/A	
4'-0"	2'-3"	0'-5"	1'-0"	0'-5"	0'-8"	FULLY MORTARED	1'-10"	SEE A/RW2	SEE A/RW2	SEE A/RW2	N/A	
5'-0"	2'-3"	0'-5"	1'-3"	0'-6"	0'-10"	0'-8"	1'-10"	1'-6"	3'-11"	3'-0"	6.4	
6'-0"	2'-7"	0'-6"	1'-3"	0'-6"	1'-0"	0'-10"	2'-1"	1'-8"	4'-7"	3'-9"	10.3	
7'-0"	3'-1"	0'-8"	1'-6"	0'-7"	1'-2"	0'-10"	2'-5"	1'-10"	5'-4"	4'-5"	15.1	
8'-0"	3'-9"	0'-11"	1'-6"	0'-8"	1'-4"	1'-0"	2'-10"	2'-0"	6'-0"	5'-2"	20.8	
9'-0"	4'-6"	1'-2"	1'-9"	0'-10"	1'-6"	1'-0"	3'-4"	2'-2"	6'-9"	5'-10"	27.4	
10'-0"	5'-0"	1'-5"	2'-0"	0'-11"	1'-8"	1'-2"	3'-7"	2'-5"	7'-5"	6'-7"	34.9	
11'-0"	5'-7"	1'-7"	2'-0"	1'-0"	1'-10"	1'-2"	4'-0"	2'-7"	8'-2"	7'-3"	43.3	
12'-0"	6'-0"	1'-7"	2'-0"	1'-0"	2'-0"	1'-4"	4'-5"	2'-9"	8'-10"	8'-0"	52.5	1600 psf

WALL DESIGN CRITERIA								
BEARING Qa	SLOPE TOP β	SLOPE BOT β1	ACTIVE PRESSURE WALLS <4' Φa	ACTIVE PRESSURE WALLS >4' Φa	PASSIVE PRESSURE Φp	FRICTION ANGLE BASE δ	SLOPE OF BACK OF WALL α	SURCHARGE q
1500PSF	5.71 deg	14 deg	28 deg	35 deg	28 deg	17 deg	99.46 deg	0 psf

USE THIS SCHEDULE FOR 2/RW2

MASONRY WALL SCHEDULE 2500 psf – BEARING CAPACITY (HARD NATURAL UNDISTURBED SOILS SEE GENERAL NOTES SHEET RW1)												
WALL HEIGHT H	BASE WIDTH B	TOE B1	BASE DEPTH (TOE) C	BASE DEPTH (HEEL) C1	BATTER A	FULLY MORTARED ZONE E	THICKNESS OF WALL T	GRAVEL (BOTTOM) G1	GRAVEL (TOP) G2	GRAVEL G3	VOLUME GRAVEL cf/ft	BEARING CAPACITY
1'-0"	1'-0"	0'-0"	0'-6"	0'-2"	0'-2"	FULLY MORTARED	1'-0"	SEE A/RW2	SEE A/RW2	SEE A/RW2	N/A	2500 psf
2'-0"	1'-2"	0'-2"	0'-9"	0'-3"	0'-4"	FULLY MORTARED	1'-0"	SEE A/RW2	SEE A/RW2	SEE A/RW2	N/A	
3'-0"	1'-8"	0'-4"	0'-9"	0'-4"	0'-6"	FULLY MORTARED	1'-4"	SEE A/RW2	SEE A/RW2	SEE A/RW2	N/A	
4'-0"	2'-3"	0'-5"	1'-0"	0'-5"	0'-8"	FULLY MORTARED	1'-10"	SEE A/RW2	SEE A/RW2	SEE A/RW2	N/A	
5'-0"	2'-3"	0'-5"	1'-3"	0'-6"	0'-10"	0'-8"	1'-10"	1'-6"	3'-11"	3'-0"	6.4	
6'-0"	2'-6"	0'-6"	1'-3"	0'-6"	1'-0"	0'-10"	2'-0"	1'-8"	4'-7"	3'-9"	10.3	
7'-0"	2'-11"	0'-7"	1'-3"	0'-7"	1'-2"	0'-10"	2'-4"	1'-10"	5'-4"	4'-5"	15.1	
8'-0"	3'-5"	0'-9"	1'-6"	0'-8"	1'-4"	1'-0"	2'-8"	2'-0"	6'-0"	5'-2"	20.8	
9'-0"	4'-0"	0'-11"	1'-9"	0'-9"	1'-6"	1'-0"	3'-1"	2'-2"	6'-9"	5'-10"	27.4	
10'-0"	4'-5"	1'-1"	2'-0"	0'-10"	1'-8"	1'-2"	3'-4"	2'-5"	7'-5"	6'-7"	34.9	
11'-0"	5'-0"	1'-3"	2'-0"	0'-11"	1'-10"	1'-2"	3'-9"	2'-7"	8'-2"	7'-3"	43.3	
12'-0"	5'-7"	1'-5"	2'-0"	1'-0"	2'-0"	1'-4"	4'-2"	2'-9"	8'-10"	8'-0"	52.5	

WALL DESIGN CRITERIA								
BEARING Qa	SLOPE TOP β	SLOPE BOT β1	ACTIVE PRESSURE WALLS <4' Φa	ACTIVE PRESSURE WALLS >4' Φa	PASSIVE PRESSURE Φp	FRICTION ANGLE BASE δ	SLOPE OF BACK OF WALL α	SURCHARGE q
2500PSF	5.71 deg	14 deg	28 deg	35 deg	28 deg	19 deg	99.46 deg	0 psf

USE THIS SCHEDULE FOR 2/RW2

2 / RW2 — TYPICAL WALL SECTION – 1V:10H MAX
SLOPE ABOVE WALL
BEARING IN CLAYEY SOILS

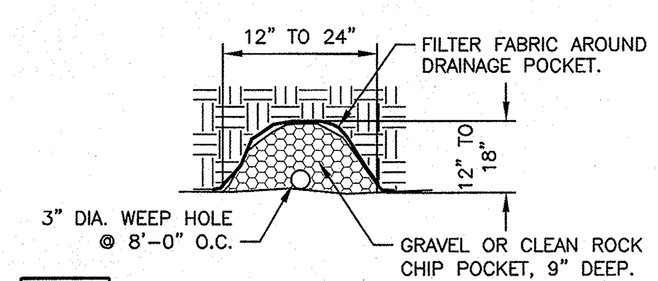

A / RW2 — DRAINAGE POCKET
WALLS 4'-0" OR LESS

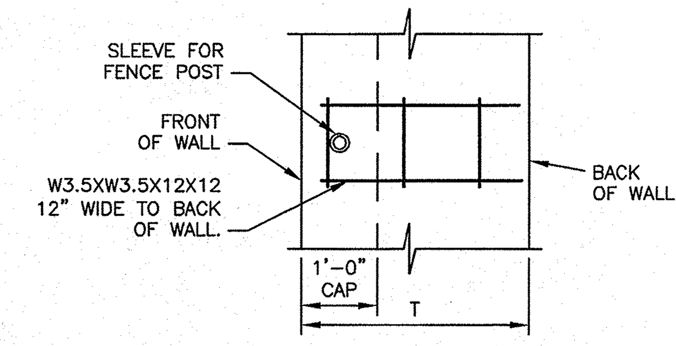

B / RW2 — ELEVATION OF WELDED WIRE FABRIC FOR FENCE SLEEVE

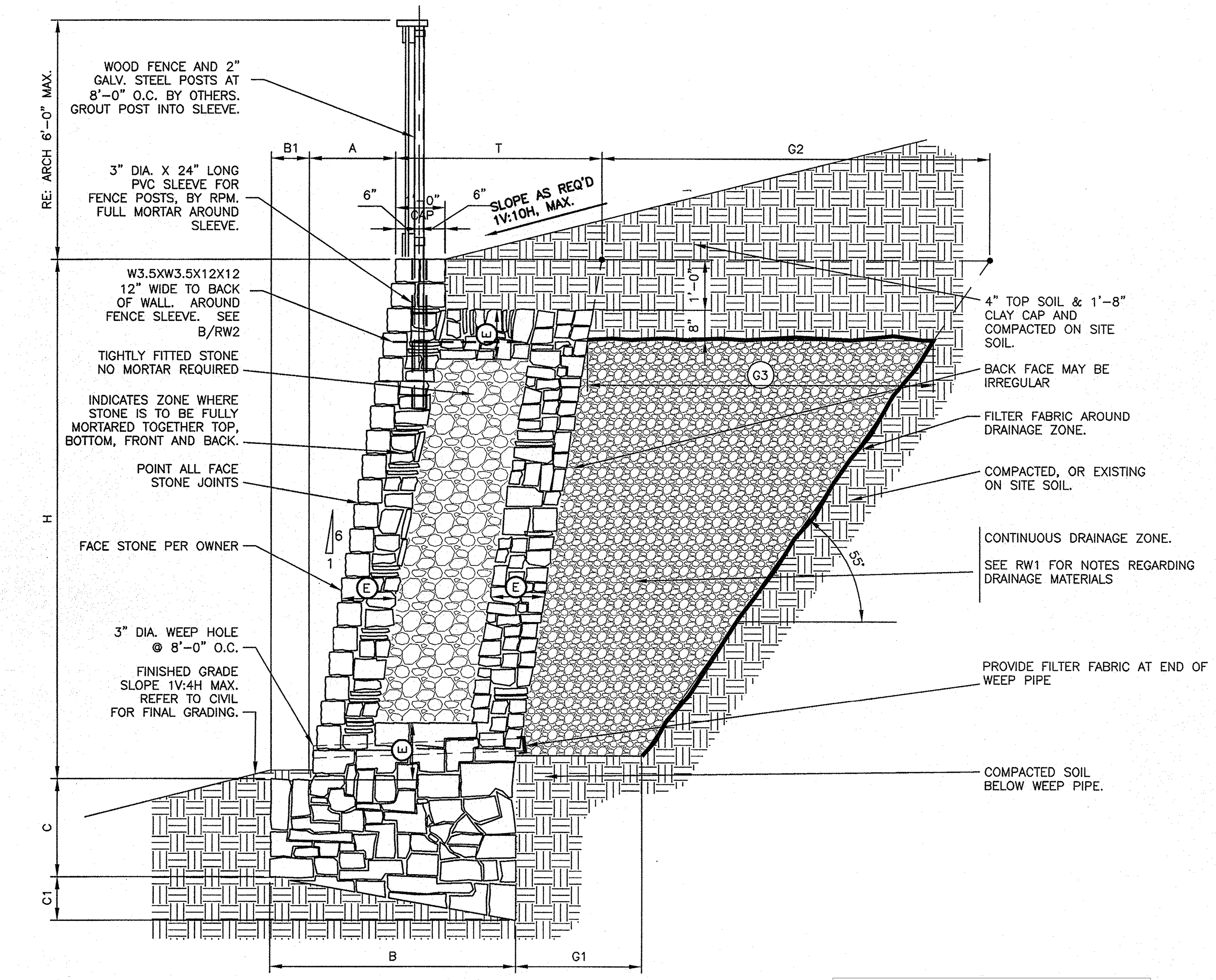

MASONRY WALL SCHEDULE 1500 psf – BEARING CAPACITY (STIFF NATURAL UNDISTURBED SOILS OR COMPACTED AND TESTED SOILS SEE GENERAL NOTES SHEET RW1)												
WALL HEIGHT H	BASE WIDTH B	TOE B1	BASE DEPTH (TOE) C	BASE DEPTH (HEEL) C1	BATTER A	FULLY MORTARED ZONE E	THICKNESS OF WALL T	GRAVEL (BOTTOM) G1	GRAVEL (TOP) G2	GRAVEL G3	VOLUME GRAVEL cf/ft	BEARING CAPACITY
1'-0"	2'-0"	0'-3"	1'-0"	0'-2"	0'-2"	FULLY MORTARED	1'-9"	SEE A/RW2	SEE A/RW2	SEE A/RW2	N/A	1500 psf
2'-0"	2'-0"	0'-3"	1'-0"	0'-3"	0'-4"	FULLY MORTARED	1'-9"	SEE A/RW2	SEE A/RW2	SEE A/RW2	N/A	
3'-0"	2'-0"	0'-3"	1'-0"	0'-4"	0'-6"	FULLY MORTARED	1'-9"	SEE A/RW2	SEE A/RW2	SEE A/RW2	N/A	
4'-0"	2'-3"	0'-3"	1'-0"	0'-5"	0'-8"	FULLY MORTARED	2'-0"	SEE A/RW2	SEE A/RW2	SEE A/RW2	N/A	
5'-0"	2'-5"	0'-5"	1'-3"	0'-6"	0'-10"	0'-8"	2'-0"	1'-6"	3'-11"	3'-0"	6.4	
6'-0"	2'-9"	0'-6"	1'-3"	0'-6"	1'-0"	0'-10"	2'-3"	1'-8"	4'-7"	3'-9"	10.3	
7'-0"	3'-1"	0'-8"	1'-6"	0'-7"	1'-2"	0'-10"	2'-5"	1'-10"	5'-4"	4'-5"	15.1	
8'-0"	3'-9"	0'-11"	1'-6"	0'-8"	1'-4"	1'-0"	2'-10"	2'-0"	6'-0"	5'-2"	20.8	

WALL DESIGN CRITERIA							
BEARING Qa	SLOPE TOP β	SLOPE BOT β1	ACTIVE PRESSURE Φa	PASSIVE PRESSURE Φp	FRICTION ANGLE BASE δ	SLOPE OF BACK OF WALL α	SURCHARGE q
1500PSF	5.71 deg	14 deg	35 deg	28 deg	17 deg	99.46 deg	0 psf

USE THIS SCHEDULE FOR 1/RW2

MASONRY WALL SCHEDULE 2500 psf – BEARING CAPACITY (HARD NATURAL UNDISTURBED SOILS SEE GENERAL NOTES SHEET RW1)												
WALL HEIGHT H	BASE WIDTH B	TOE B1	BASE DEPTH (TOE) C	BASE DEPTH (HEEL) C1	BATTER A	FULLY MORTARED ZONE E	THICKNESS OF WALL T	GRAVEL (BOTTOM) G1	GRAVEL (TOP) G2	GRAVEL G3	VOLUME GRAVEL cf/ft	BEARING CAPACITY
1'-0"	2'-0"	0'-3"	1'-0"	0'-2"	0'-2"	FULLY MORTARED	1'-9"	SEE A/RW2	SEE A/RW2	SEE A/RW2	N/A	2500 psf
2'-0"	2'-0"	0'-3"	1'-0"	0'-3"	0'-4"	FULLY MORTARED	1'-9"	SEE A/RW2	SEE A/RW2	SEE A/RW2	N/A	
3'-0"	2'-0"	0'-3"	1'-0"	0'-4"	0'-6"	FULLY MORTARED	1'-9"	SEE A/RW2	SEE A/RW2	SEE A/RW2	N/A	
4'-0"	2'-3"	0'-3"	1'-0"	0'-5"	0'-8"	FULLY MORTARED	2'-0"	SEE A/RW2	SEE A/RW2	SEE A/RW2	N/A	
5'-0"	2'-5"	0'-5"	1'-3"	0'-6"	0'-10"	0'-8"	2'-0"	1'-6"	3'-11"	3'-0"	6.4	
6'-0"	2'-6"	0'-6"	1'-3"	0'-6"	1'-0"	0'-10"	2'-0"	1'-8"	4'-7"	3'-9"	10.3	
7'-0"	2'-11"	0'-7"	1'-3"	0'-7"	1'-2"	0'-10"	2'-4"	1'-10"	5'-4"	4'-5"	15.1	
8'-0"	3'-5"	0'-9"	1'-6"	0'-8"	1'-4"	1'-0"	2'-8"	2'-0"	6'-0"	5'-2"	20.8	

WALL DESIGN CRITERIA							
BEARING Qa	SLOPE TOP β	SLOPE BOT β1	ACTIVE PRESSURE Φa	PASSIVE PRESSURE Φp	FRICTION ANGLE BASE δ	SLOPE OF BACK OF WALL α	SURCHARGE q
2500PSF	5.71 deg	14 deg	35 deg	28 deg	19 deg	99.46 deg	0 psf

USE THIS SCHEDULE FOR 1/RW2

1 / RW2 — TYPICAL WALL SECTION – 1V:10H MAX
SLOPE ABOVE WALL
BEARING IN CLAYEY SOILS

RECORD DRAWING

ALL INFORMATION SHOWN ON THESE PLANS WAS FURNISHED BY THE CONTRACTOR ALL RESPONSIBILITY FOR THE ACCURACY BELONGS TO THE CONTRACTOR.

James Gardella
USA PROFESSIONAL SERVICES GROUP, INC.
DATE: June 16, 2014

	DATE	BY
DES.	05-08-13	AMB
DRN.	05-08-13	AMB
CHK.	05-08-13	TJW

NO.	DATE	REVISION	BY

FALKOFSKE ENGINEERING, INC.
Structural Engineering Consultants
Texas Registered Engineering Firm: # F-4038
1414 West Randol Mill Road
Suite 201
Arlington, Texas 76012
Metro (817) 261-8300

The use of these plans and specifications shall be restricted to the original site for which they were prepared. Any reproduction or distribution is expressly limited to such use. Any other reproduction, reuse, or disclosure by any method, in whole, or in part, is prohibited. These drawings and specifications contain propietary information and title remains in FALKOFSKE ENGINEERING.

MASONRY RETAINING WALLS
CARTER RANCH 5A & 5B
CELINA, TEXAS

RPM xCONSTRUCTION, LLC
PLANO, TEXAS

STATE OF TEXAS
AARON M. BERKES
107154
LICENSED PROFESSIONAL ENGINEER
5-8-13

JOB NO. 163.13

RW2

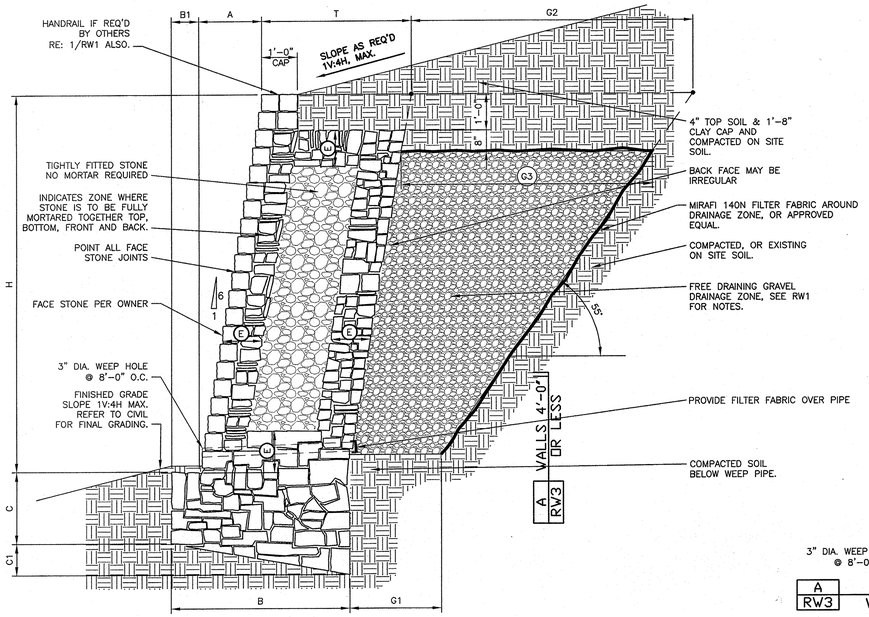

2 RW3 TYPICAL WALL SECTION - 1V:4H MAX
SLOPE ABOVE WALL
BEARING IN CLAYEY SOILS

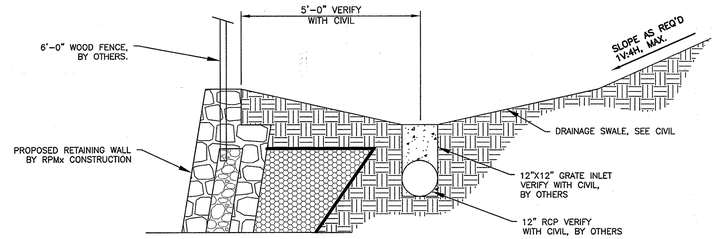

3 RW3 TOP OF WALL CONDITION AT
LOTS 19-25 BLOCK A

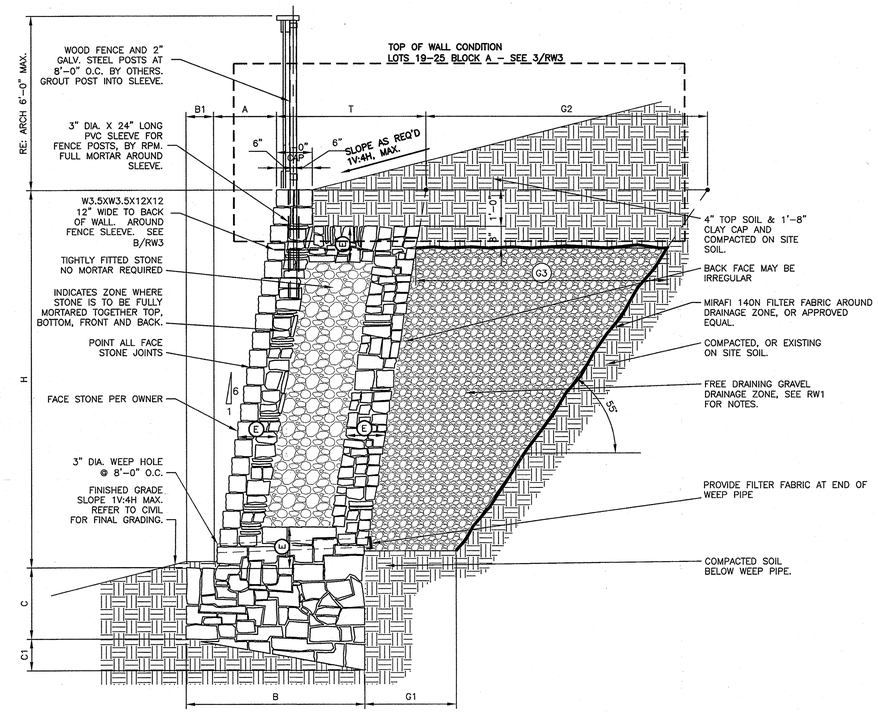

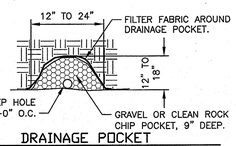

A RW3 DRAINAGE POCKET
WALLS 4'-0" OR LESS

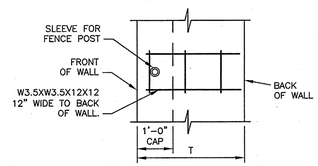

B RW3 ELEVATION OF WELDED WIRE
FABRIC FOR FENCE SLEEVE

MASONRY WALL SCHEDULE
1500 psf - BEARING CAPACITY (STIFF NATURAL UNDISTURBED SOILS OR COMPACTED AND TESTED SOILS SEE GENERAL NOTES SHEET RW1)

WALL HEIGHT H	BASE WIDTH B	TOE B1	BASE DEPTH (TOE) C	BASE DEPTH (HEEL) C1	BATTER A	FULLY MORTARED ZONE E	THICKNESS OF WALL T	GRAVEL (BOTTOM) G1	GRAVEL (TOP) G2	GRAVEL G3	VOLUME GRAVEL cf/ft	BEARING CAPACITY
1'-0"	1'-0"	0'-0"	0'-6"	0'-2"	0'-2"	FULLY MORTARED	1'-0"	SEE A/RW3	SEE A/RW3	SEE A/RW3	N/A	1500 psf
2'-0"	1'-4"	0'-2"	0'-9"	0'-3"	0'-4"	FULLY MORTARED	1'-2"	SEE A/RW3	SEE A/RW3	SEE A/RW3	N/A	
3'-0"	1'-11"	0'-4"	0'-9"	0'-5"	0'-6"	FULLY MORTARED	1'-7"	SEE A/RW3	SEE A/RW3	SEE A/RW3	N/A	
4'-0"	2'-8"	0'-5"	1'-0"	0'-6"	0'-8"	FULLY MORTARED	2'-1"	SEE A/RW3	SEE A/RW3	SEE A/RW3	N/A	
5'-0"	2'-8"	0'-5"	1'-3"	0'-6"	0'-10"	0'-8"	2'-1"	1'-6"	3'-11"	3'-0"	6.4	
6'-0"	2'-10"	0'-6"	1'-3"	0'-6"	1'-0"	0'-10"	2'-4"	1'-8"	4'-7"	3'-9"	10.3	

WALL DESIGN CRITERIA

BEARING Qa	SLOPE TOP β	SLOPE BOT β1	ACTIVE PRESSURE WALLS <4' Φa	ACTIVE PRESSURE WALLS >4' Φa	PASSIVE PRESSURE Φp	FRICTION ANGLE BASE δ	SLOPE OF BACK OF WALL α	SURCHARGE q
1500PSF	14 deg	14 deg	28 deg	35 deg	28 deg	17 deg	99.46 deg	0 psf

USE THIS SCHEDULE FOR 2/RW3

MASONRY WALL SCHEDULE
2500 psf - BEARING CAPACITY (HARD NATURAL UNDISTURBED SOILS SEE GENERAL NOTES SHEET RW1)

WALL HEIGHT H	BASE WIDTH B	TOE B1	BASE DEPTH (TOE) C	BASE DEPTH (HEEL) C1	BATTER A	FULLY MORTARED ZONE E	THICKNESS OF WALL T	GRAVEL (BOTTOM) G1	GRAVEL (TOP) G2	GRAVEL G3	VOLUME GRAVEL cf/ft	BEARING CAPACITY
1'-0"	1'-0"	0'-0"	0'-6"	0'-2"	0'-2"	FULLY MORTARED	1'-0"	SEE A/RW3	SEE A/RW3	SEE A/RW3	N/A	2500 psf
2'-0"	1'-4"	0'-2"	0'-9"	0'-3"	0'-4"	FULLY MORTARED	1'-2"	SEE A/RW3	SEE A/RW3	SEE A/RW3	N/A	
3'-0"	1'-10"	0'-4"	0'-9"	0'-4"	0'-6"	FULLY MORTARED	1'-6"	SEE A/RW3	SEE A/RW3	SEE A/RW3	N/A	
4'-0"	2'-4"	0'-5"	0'-9"	0'-5"	0'-8"	FULLY MORTARED	1'-11"	SEE A/RW3	SEE A/RW3	SEE A/RW3	N/A	
5'-0"	2'-5"	0'-5"	1'-0"	0'-6"	0'-10"	0'-8"	2'-0"	1'-6"	3'-11"	3'-0"	6.4	
6'-0"	2'-8"	0'-6"	1'-3"	0'-6"	1'-0"	0'-10"	2'-2"	1'-8"	4'-7"	3'-9"	10.3	

WALL DESIGN CRITERIA

BEARING Qa	SLOPE TOP β	SLOPE BOT β1	ACTIVE PRESSURE WALLS <4' Φa	ACTIVE PRESSURE WALLS >4' Φa	PASSIVE PRESSURE Φp	FRICTION ANGLE BASE δ	SLOPE OF BACK OF WALL α	SURCHARGE q
2500PSF	14 deg	14 deg	28 deg	35 deg	28 deg	19 deg	99.46 deg	0 psf

USE THIS SCHEDULE FOR 2/RW3

RECORD DRAWING

ALL INFORMATION SHOWN ON THESE PLANS WAS FURNISHED BY THE CONTRACTOR ALL RESPONSIBILITY FOR THE ACCURACY BELONGS TO THE CONTRACTOR.

James Gardella
USA PROFESSIONAL SERVICES GROUP, INC.
DATE: June 16, 2014

MASONRY WALL SCHEDULE
1500 psf - BEARING CAPACITY (STIFF NATURAL UNDISTURBED SOILS OR COMPACTED AND TESTED SOILS SEE GENERAL NOTES SHEET RW1)

WALL HEIGHT H	BASE WIDTH B	TOE B1	BASE DEPTH (TOE) C	BASE DEPTH (HEEL) C1	BATTER A	FULLY MORTARED ZONE E	THICKNESS OF WALL T	GRAVEL (BOTTOM) G1	GRAVEL (TOP) G2	GRAVEL G3	VOLUME GRAVEL cf/ft	BEARING CAPACITY
1'-0"	2'-0"	0'-3"	1'-0"	0'-2"	0'-2"	FULLY MORTARED	1'-9"	SEE A/RW3	SEE A/RW3	SEE A/RW3	N/A	1500 psf
2'-0"	2'-0"	0'-3"	1'-0"	0'-3"	0'-4"	FULLY MORTARED	1'-9"	SEE A/RW3	SEE A/RW3	SEE A/RW3	N/A	
3'-0"	2'-1"	0'-3"	1'-0"	0'-4"	0'-6"	FULLY MORTARED	1'-10"	SEE A/RW3	SEE A/RW3	SEE A/RW3	N/A	
4'-0"	2'-6"	0'-3"	1'-0"	0'-6"	0'-8"	FULLY MORTARED	2'-3"	SEE A/RW3	SEE A/RW3	SEE A/RW3	N/A	
5'-0"	2'-7"	0'-4"	1'-3"	0'-6"	0'-10"	0'-8"	2'-3"	1'-6"	3'-11"	3'-0"	6.4	
6'-0"	2'-9"	0'-5"	1'-3"	0'-6"	1'-0"	0'-10"	2'-4"	1'-8"	4'-7"	3'-9"	10.3	

WALL DESIGN CRITERIA

BEARING Qa	SLOPE TOP β	SLOPE BOT β1	ACTIVE PRESSURE Φa	PASSIVE PRESSURE Φp	FRICTION ANGLE BASE δ	SLOPE OF BACK OF WALL α	WIND LOAD W1
1500PSF	5.71 deg	14 deg	35 deg	28 deg	17 deg	99.46 deg	15 psf

USE THIS SCHEDULE FOR 1/RW3

MASONRY WALL SCHEDULE
2500 psf - BEARING CAPACITY (HARD NATURAL UNDISTURBED SOILS SEE GENERAL NOTES SHEET RW1)

WALL HEIGHT H	BASE WIDTH B	TOE B1	BASE DEPTH (TOE) C	BASE DEPTH (HEEL) C1	BATTER A	FULLY MORTARED ZONE E	THICKNESS OF WALL T	GRAVEL (BOTTOM) G1	GRAVEL (TOP) G2	GRAVEL G3	VOLUME GRAVEL cf/ft	BEARING CAPACITY
1'-0"	2'-0"	0'-3"	1'-0"	0'-2"	0'-2"	FULLY MORTARED	1'-9"	SEE A/RW3	SEE A/RW3	SEE A/RW3	N/A	2500 psf
2'-0"	2'-0"	0'-3"	1'-0"	0'-3"	0'-4"	FULLY MORTARED	1'-9"	SEE A/RW3	SEE A/RW3	SEE A/RW3	N/A	
3'-0"	2'-1"	0'-3"	1'-0"	0'-4"	0'-6"	FULLY MORTARED	1'-10"	SEE A/RW3	SEE A/RW3	SEE A/RW3	N/A	
4'-0"	2'-3"	0'-3"	1'-0"	0'-5"	0'-8"	FULLY MORTARED	2'-0"	SEE A/RW3	SEE A/RW3	SEE A/RW3	N/A	
5'-0"	2'-5"	0'-5"	1'-3"	0'-6"	0'-10"	0'-8"	2'-0"	1'-6"	3'-11"	3'-0"	6.4	
6'-0"	2'-8"	0'-6"	1'-3"	0'-6"	1'-0"	0'-10"	2'-2"	1'-8"	4'-7"	3'-9"	10.3	

WALL DESIGN CRITERIA

BEARING Qa	SLOPE TOP β	SLOPE BOT β1	ACTIVE PRESSURE Φa	PASSIVE PRESSURE Φp	FRICTION ANGLE BASE δ	SLOPE OF BACK OF WALL α	WIND LOAD W1
2500PSF	5.71 deg	14 deg	35 deg	28 deg	19 deg	99.46 deg	15 psf

USE THIS SCHEDULE FOR 1/RW3

1 RW3 TYPICAL WALL SECTION - 1V:10H MAX
SLOPE ABOVE WALL
BEARING IN CLAYEY SOILS

NO.	DATE	REVISION	BY
1	06-30-13	INCLUDED DETAIL WITH SWALE ABOVE WALL	AMB

	DATE	BY
DES.	05-09-13	AMB
DRN.	05-09-13	AMB
CHK.	05-09-13	TJW

FALKOFSKE ENGINEERING, INC.
Structural Engineering Consultants
Texas Registered Engineering Firm: # F-4038
1414 West Randol Mill Road
Suite 201
Arlington, Texas 76012
Metro (817) 261-8300

The use of these plans and specifications shall be restricted to the original site for which they were prepared, and any reproduction or distribution is expressly prohibited. Any other reproduction, reuse, or distribution of these plans in whole, or in part, is prohibited. These drawings and specifications contain proprietary information belonging to FALKOFSKE ENGINEERING.

MASONRY RETAINING WALLS
CARTER RANCH 5A & 5B
CELINA, TEXAS

RPM xCONSTRUCTION, LLC
PLANO, TEXAS

STATE OF TEXAS
AARON M. BERKES
107154
LICENSED
PROFESSIONAL ENGINEER
8-30-13

JOB NO. 163.13

RW3

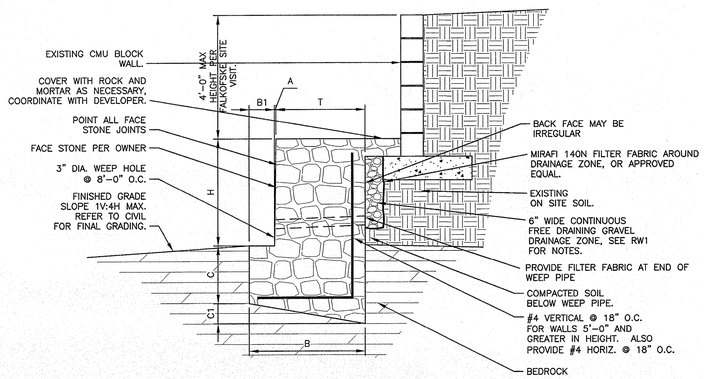

MASONRY WALL SCHEDULE
2500 psf – BEARING CAPACITY (HARD NATURAL UNDISTURBED SOILS SEE GENERAL NOTES SHEET RW1)

WALL HEIGHT H	BASE WIDTH B	TOE B1	BASE DEPTH (TOE) C	BASE DEPTH (HEEL) C1	BATTER A	FULLY MORTARED ZONE E	THICKNESS OF WALL T	BEARING CAPACITY
1'-0"	1'-8"	0'-6"	1'-0"	0'-3"	1/8"	FULLY MORTARED	1'-2"	2500 psf
2'-0"	2'-5"	0'-9"	1'-0"	0'-5"	1/4"	FULLY MORTARED	1'-8"	
3'-0"	3'-2"	1'-0"	1'-3"	0'-7"	3/8"	FULLY MORTARED	2'-2"	
4'-0"	4'-0"	1'-6"	1'-9"	0'-9"	1/2"	FULLY MORTARED	2'-6"	
5'-0"	5'-0"	2'-6"	2'-3"	0'-11"	5/8"	FULLY MORTARED	2'-6"	
6'-0"	6'-0"	3'-6"	2'-9"	1'-1"	3/4"	FULLY MORTARED	2'-6"	

WALL DESIGN CRITERIA

BEARING Qa	SLOPE TOP β	SLOPE BOT β1	ACTIVE PRESSURE Φa	PASSIVE PRESSURE Φp	FRICTION ANGLE BASE δ	SLOPE OF BACK OF WALL α
2500PSF	0 deg	14 deg	28 deg	28 deg	19 deg	90 deg

USE THIS SCHEDULE FOR 2/RW4

2 / RW4 — TYPICAL WALL SECTION
WITH EXISTING CMU BLOCK WALL ABOVE
BEARING IN BEDROCK

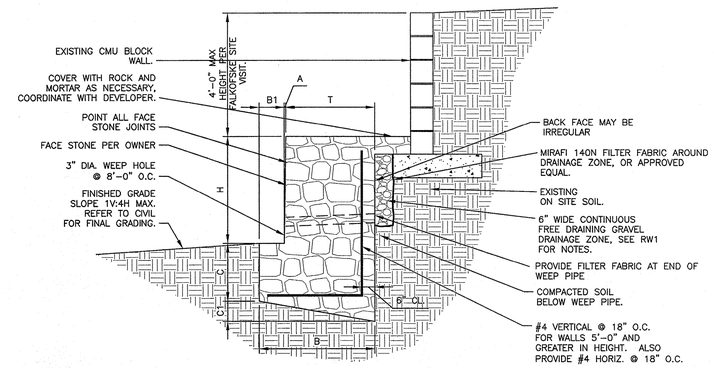

MASONRY WALL SCHEDULE
2500 psf – BEARING CAPACITY (HARD NATURAL UNDISTURBED SOILS SEE GENERAL NOTES SHEET RW1)

WALL HEIGHT H	BASE WIDTH B	TOE B1	BASE DEPTH (TOE) C	BASE DEPTH (HEEL) C1	BATTER A	FULLY MORTARED ZONE E	THICKNESS OF WALL T	BEARING CAPACITY
1'-0"	1'-10"	0'-6"	1'-6"	0'-4"	1/8"	FULLY MORTARED	1'-3"	2500 psf
2'-0"	2'-9"	0'-9"	1'-6"	0'-6"	1/4"	FULLY MORTARED	2'-0"	
3'-0"	3'-6"	1'-0"	1'-9"	0'-8"	3/8"	FULLY MORTARED	2'-6"	
4'-0"	4'-3"	1'-9"	2'-3"	0'-9"	1/2"	FULLY MORTARED	2'-6"	
5'-0"	5'-0"	2'-6"	2'-6"	0'-11"	5/8"	FULLY MORTARED	2'-6"	
6'-0"	6'-0"	3'-6"	3'-6"	1'-1"	3/4"	FULLY MORTARED	2'-6"	

WALL DESIGN CRITERIA

BEARING Qa	SLOPE TOP β	SLOPE BOT β1	ACTIVE PRESSURE Φa	PASSIVE PRESSURE Φp	FRICTION ANGLE BASE δ	SLOPE OF BACK OF WALL α
2500PSF	0 deg	14 deg	28 deg	28 deg	19 deg	90 deg

USE THIS SCHEDULE FOR 1/RW4

1 / RW4 — TYPICAL WALL SECTION
WITH EXISTING CMU BLOCK WALL ABOVE
BEARING IN CLAYEY SOILS

RECORD DRAWING

ALL INFORMATION SHOWN ON THESE PLANS WAS FURNISHED BY THE CONTRACTOR ALL RESPONSIBILITY FOR THE ACCURACY BELONGS TO THE CONTRACTOR.

James Gardella
USA PROFESSIONAL SERVICES GROUP, INC.
DATE: June 16, 2014

	DATE	BY
DES.	05-08-13	AMB
DRN.	05-08-13	AMB
CHK.	05-08-13	TJW

NO.	DATE	REVISION	BY

FALKOFSKE ENGINEERING, INC.
Structural Engineering Consultants
Texas Registered Engineering Firm: # F-4038
1414 West Randol Mill Road
Suite 201
Arlington, Texas 76012
Metro (817) 261-8300

The use of these plans and specifications shall be restricted to the original site for which they were prepared, and any reproduction or distribution is prohibited. Any other use or reuse, in whole or in part, is prohibited without the express written permission of FALKOFSKE ENGINEERING.

MASONRY RETAINING WALLS
CARTER RANCH 5A & 5B
CELINA, TEXAS

RPM xCONSTRUCTION, LLC
PLANO, TEXAS

STATE OF TEXAS
AARON M. BERKES
107154
LICENSED
PROFESSIONAL ENGINEER
5-8-13

JOB NO. 163.13

RW4