CIVIL CONSTRUCTION PLANS
FOR

INDEPENDENT BANK
290 S. PRESTON ROAD
BLOCK A, LOT 1, MILLER ADDITION
NEC S.H. 289 @ C.R. 98
J.K. RICE SURVEY, ABSTRACT NO. 767

COLLIN COUNTY
CITY OF CELINA, TEXAS

PLANS PREPARED BY:

POGUE ENGINEERING & DEVELOPMENT COMPANY, INC.
1515 HERITAGE DRIVE, SUITE 105
McKINNEY, TEXAS 75069
PH (214) 544-8880
FAX (214) 544-8882
RANDALL P. POGUE, P.E.

PLANS PREPARED FOR:
JIM WILSON ARCHITECTS
217 WOOD STREET
McKINNEY, TEXAS 75069
MR. JIM WILSON
(972) 562-9903 PHONE
(972) 547-4111 FAX

LEGEND

B.	BOLLARD
EM	ELECTRIC METER
PP	POWER POLE
LS	LIGHT STANDARD
WM	WATER METER
WV	WATER VALVE
ICV	IRRIGATION CONTROL VALVE
FH	FIRE HYDRANT
FDC	FIRE DEPARTMENT CONNECTION
CO	CLEAN OUT
MH	MANHOLE
GM	GAS METER
TSC	TRAFFIC SIGNAL CONTROL
TSP	TRAFFIC SIGNAL POLE
SIGN	TRAFFIC SIGN
TELE	TELEPHONE RISER
TV	TV BOX
FP	FLAG POLE
L.A.	LANDSCAPE AREA
	PROPERTY LINE
OHL	O.H. POWER LINES
TEL	U/G TELEPHONE LINES
WATER	U/G WATER LINE
GAS	U/G GAS LINE
x x	FENCE
500	EXISTING CONTOURS
XXX.XX	EXISTING SPOT GRADES
(C.M.)	CONTROLLING MONUMENT
SIR	5/8-INCH IRON ROD WITH "POGUE ENG & DEV" CAP SET
XXX	PROPOSED CONTOURS
TC XXX.XX G XXX.XX	PROPOSED SPOT GRADES
	PROPOSED EROSION CONTROL
	PROPOSED DRAINAGE DIVIDES

FRANCHISE UTILITY NOTES:
1. TXU ELECTRIC DELIVER – MR. ALLAN BAXTER – (972) 569-6309
2. AT&T – MR. STEVE TURPIE – (972) 569-4756

CAUTION!!!
UNDERGROUND UTILITIES ARE LOCATED IN THIS AREA. 48 HOURS PRIOR TO ANY CONSTRUCTION ACTIVITIES, CONTACT LINE LOCATES FOR FRANCHISE UTILITY INFO.
CALL BEFORE YOU DIG:
TEXAS EXCAVATION SAFETY SYSTEM (TESS)
1-800-344-8377
TEXAS ONE CALL SYSTEMS
1-800-245-4545
LONE STAR NOTIFICATION CENTER
1-800-669-8344 EXT. 5

BEFORE YOU DIG...

BENCH MARK LIST:

BENCHMARK #1 (RM1 PER FEMA MAP)
SQUARE CUT ON NORTH END OF WEST HEADWALL OF CULVERT ON STATE ROUTE 289, 350± FEET SOUTH OF INTERSECTION WITH FM 455
ELEVATION = 702.97

BENCHMARK #2
"+" CUT ON TOP OF CONCRETE HEADWALL LOCATED AT SOUTHEAST CORNER OF THE INTERSECTION OF PRESTON ROAD AND FM 455
ELEVATION = 714.27

BENCHMARK #3
SQUARE CUT ON TOP OF CURB CENTERLINE OF STORM SEWER INLET LOCATED AT SOUTH SIDE OF C.R. 98 100'± EAST FROM CENTERLINE OF S.H. 289
ELEVATION = 725.24

OWNER:
MR. BOB McKNIGHT
INDEPENDENT BANK
142 N. OHIO
CELINA, TEXAS 75009
(972) 382-2351 PHONE
(972) 382-2768 FAX

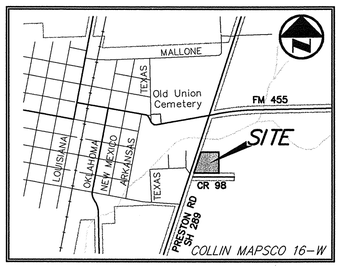

VICINITY MAP
NOT TO SCALE

TxDOT NOTES:
1. ALL CONSTRUCTION WITHIN THE STATE RIGHT OF WAY WILL REQUIRE COMPLIANCE TO TXDOT STANDARD SPECIFICATIONS, STANDARD PLANS, AND TEXAS MANUAL ON UNIFORM TRAFFIC CONTROL DEVICES.

2. SPECIFICATIONS ADOPTED BY THE TEXAS DEPARTMENT OF TRANSPORTATION, JUNE 1, 2004, AND SPECIFICATION ITEMS LISTED AND DATED AS FOLLOWS SHALL GOVERN ON THIS PROJECT. FOR ALL WORK WITHIN THE STATE RIGHT OF WAY.

RECORD DRAWINGS:
IT WAS THE INTENT THAT THE IMPROVEMENTS SHOWN BE CONSTRUCTED ACCORDING TO THESE PLANS AS APPROVED BY THE CITY. THE LINES AND GRADES WERE SET ON THE GROUND FOR CONSTRUCTION ACCORDING TO SAID PLANS. THE CITY INSPECTED THE CONSTRUCTION. THE ENGINEER DID NOT VERIFY LINES OR GRADES AFTER CONSTRUCTION. WE ARE NOT AWARE OF ANY CHANGES OR REVISIONS TO THESE PLANS DURING CONSTRUCTION OTHER THAN THOSE SHOWN.

RANDALL P. POGUE, P.E. DATE: FEBRUARY 22, 2008
TX LIC. NO. 84780

1 10-16-07 TXDOT COMMENTS
2 02-22-08 RECORD DRAWINGS

PROJECT GENERAL NOTES:

1. SIZE AND LOCATION OF ALL UNDERGROUND UTILITIES HAVE BEEN REPRODUCED FROM PLANS ON FILE WITH THE CITY. CONTRACTOR TO VERIFY SIZE AND LOCATION OF ALL UTILITIES PRIOR TO COMMENCEMENT OF ANY CONSTRUCTION ACTIVITY.

2. THE BEARING SYSTEM FOR THIS TRACT WAS BASED ON A BEARING OF SOUTH 88 DEGREES, 04 MINUTES, 32 SECONDS WEST FOR THE SOUTH LINE OF THE SUBJECT TRACT. THE SUBJECT TRACT IS DEFINED IN THE DEED AS RECORDED IN VOLUME 814, PAGE 808, DEED RECORDS, COLLIN COUNTY, TEXAS.

3. BASE BOUNDARY AND TOPOGRAPHY INFORMATION SHOWN IS BASED ON THE GROUND SURVEY AS PREPARED BY POGUE ENGINEERING & DEVELOPMENT, INC. DATED 02-15-07.

4. THE SUBJECT PROPERTY IS SHOWN ON THE NATIONAL FLOOD INSURANCE PROGRAM FLOOD INSURANCE RATE MAP FOR COLLIN COUNTY, TEXAS AND INCORPORATED AREAS COMMUNITY PANEL NUMBER 48085C0110 G, DATED JANUARY 19, 1996, AMMENDED BY A LETTER OF MAP REVISION DATED OCTOBER 20, 2006. ALL OF THE SUBJECT PROPERTY IS INDICATED TO BE IN ZONE "X" ON SAID MAP. RELEVANT ZONES ARE DEFINED ON SAID MAP AS FOLLOWS:

ZONE "X" – AREAS DETERMINED TO BE OUTSIDE OF THE 500-YR FLOOD PLAIN.

THIS FLOOD STATEMENT REGARDING FLOODING DOES NOT IMPLY THAT THE PROPERTY AND/OR STRUCTURES THEREON WILL BE FREE FROM FLOODING OR FLOOD DAMAGE. ON RARE OCCASIONS, GREATER FLOODS CAN AND WILL OCCUR AND FLOOD HEIGHTS MAY BE INCREASED BY MAN-MADE OR NATURAL CAUSES. THIS FLOOD STATEMENT SHALL NOT CREATE LIABILITY ON THE PART OF THE SURVEYOR AND/OR ENGINEER.

5. PRIOR TO ANY CONSTRUCTION ACTIVITY, THE CONTRACTOR SHALL BECOME FAMILIAR WITH THE PLANS AND SPECIFICATIONS INCLUDING ALL NOTES, THE STANDARD SPECIFICATIONS FOR PUBLIC WORKS CONSTRUCTION AS ISSUED BY THE NORTH TEXAS CENTRAL TEXAS COUNCIL OF GOVERNMENTS, THE CITY STANDARDS FOR PUBLIC WORKS CONSTRUCTION AND ANY OTHER APPLICABLE STANDARD AND SPECIFICATIONS RELEVANT TO THE PROPER COMPLETION OF THE WORK HEREIN SPECIFIED. FAILURE ON THE PART OF THE CONTRACTOR TO BECOME FAMILIAR WITH SAID STANDARDS AND SPECIFICATIONS PERTAINING TO THIS WORK SHALL IN NO WAY RELIEVE THE CONTRACTOR OF RESPONSIBILITY OF PERFORMING THE WORK IN ACCORDANCE WITH ALL SUCH APPLICABLE STANDARDS AND SPECIFICATIONS.

6. REFER TO THE GEOTECHNICAL REPORT FOR SUBSURFACE SOIL CONDITIONS AND RECOMMENDATIONS PERTAINING TO THE SUBJECT SITE.

7. ALL DIMENSIONS ARE FROM BACK OF CURB TO BACK OF CURB, UNLESS OTHERWISE NOTED.

8. REFER TO THE STANDARD DETAILS AND GENERAL NOTES PLAN(S) FOR PAVING, DRAINAGE, AND UTILITY STANDARD DETAILS AND GENERAL NOTES.

9. REFER TO THE ARCHITECTURAL AND STRUCTURAL PLANS TO VERIFY ALL BUILDING DIMENSIONS.

10. REFER TO THE ARCHITECTURAL PLANS FOR DETAILED BUILDING ENTRANCE LAYOUTS, RAMPS, DUMPSTER AREA, BUILDING OVERHANGS, BOLLARDS, LANDSCAPING AND SIDEWALKS.

11. REFER TO THE ARCHITECTURAL AND MECHANICAL PLANS FOR THE EXACT LOCATIONS FOR ROOF DRAIN COLLECTION SYSTEM TIE IN LOCATIONS.

12. REFER TO THE ARCHITECTURAL AND ELECTRICAL PLANS FOR THE SITE LIGHTING LOCATIONS, REQUIREMENTS AND SPECIFICATIONS.

13. DUMPSTER SCREENING TO COMPLY WITH CITY REQUIREMENTS.

INDEX OF DRAWINGS

	COVER SHEET
	CONSTRUCTION PLAT
C1.01	SITE PLAN
C1.02	PAVING PLAN & PROFILE
C1.03	STANDARD DETAILS SHEET
C2.01	DRAINAGE AREA MAP
C3.01	GRADING PLAN
C4.01	EROSION CONTROL SITE PLAN (SWPPP)
C4.02	EROSION CONTROL DETAILS (SWPPP)
C5.01	STORM SEWER PLAN
C5.02	STORM SEWER PROFILES
C5.03	STORM SEWER DETAILS
* C5.04	SETP-PD
C6.01	WATER & SANITARY SEWER PLAN
C6.02	WATER & SANITARY SEWER PROFILES
C6.03	WATER & SANITARY SEWER DETAILS
C7.01	GENERAL NOTES SHEET
* C8.01	TCP(1-1)-98
* C9.01	BC(1)-03
* C9.02	BC(2)-03
* C9.03	BC(3)-03
* C9.04	BC(4)-03
* C9.05	BC(5)-03
* C9.06	BC(6)-03
* C9.07	BC(7)-03
* C9.08	BC(8)-03
* C9.09	BC(9)-03
* C9.10	BC(10)-03
* C9.11	BC(11)-03
* C9.12	BC(12)-03
* C10.01	SMD(GEN)-02
* C10.02	SMD(SLIP-1)-02
* C10.03	SMD(SLIP-2)-02
* C10.04	SMD(SLIP-3)-02
* C10.05	SMD(TWT)-02
* C10.06	SMD(FRP)-02
* C11.01	EC(1)-93
* C11.02	EC(2)-93
* C11.03	EC(3)-93

* THE STANDARD SHEETS, SPECIFICALLY IDENTIFIED IN THIS INDEX OF SHEETS, HAVE BEEN SELECTED BY ME OR UNDER MY RESPONSIBLE SUPERVISION AS BEING APPLICABLE TO THIS PROJECT.

THE SEAL APPEARING ON THIS DOCUMENT WAS AUTHORIZED BY RANDALL P. POGUE, P.E. 84780 ON 08/24/07. ALTERATION OF A SEALED DOCUMENT WITHOUT PROPER NOTIFICATION TO THE RESPONSIBLE ENGINEER IS AN OFFENSE UNDER THE TEXAS ENGINEERING PRACTICE ACT.

STATE OF TEXAS
RANDALL P. POGUE
84780
LICENSED PROFESSIONAL ENGINEER

8-24-07

© POGUE ENGINEERING & DEVELOPMENT COMPANY, INC. 2007. ALL RIGHTS RESERVED THE ENGINEERING DESIGN, DETAIL AND ENGINEERING DRAWINGS FOR THIS PROJECT AND/OR OVERALL PROJECT ARE THE LEGAL PROPERTY OF POGUE ENGINEERING & DEVELOPMENT COMPANY, INC. THEIR USE FOR REPRODUCTION, CONSTRUCTION, OR DISTRIBUTION IS PROHIBITED UNLESS AUTHORIZED IN WRITING BY POGUE ENGINEERING & DEVELOPMENT COMPANY, INC.

TWILLIAMS 02/22/2008 - 9:45AM
N:\JOBS\1200-1299\1294-06-065\DWG\1294-06-065-07A.DWG

INDEPENDENT BANK – CELINA

PI NO: 1294-06-065

DWG NO: 1294-06-065-07A.DWG
P-200708-01

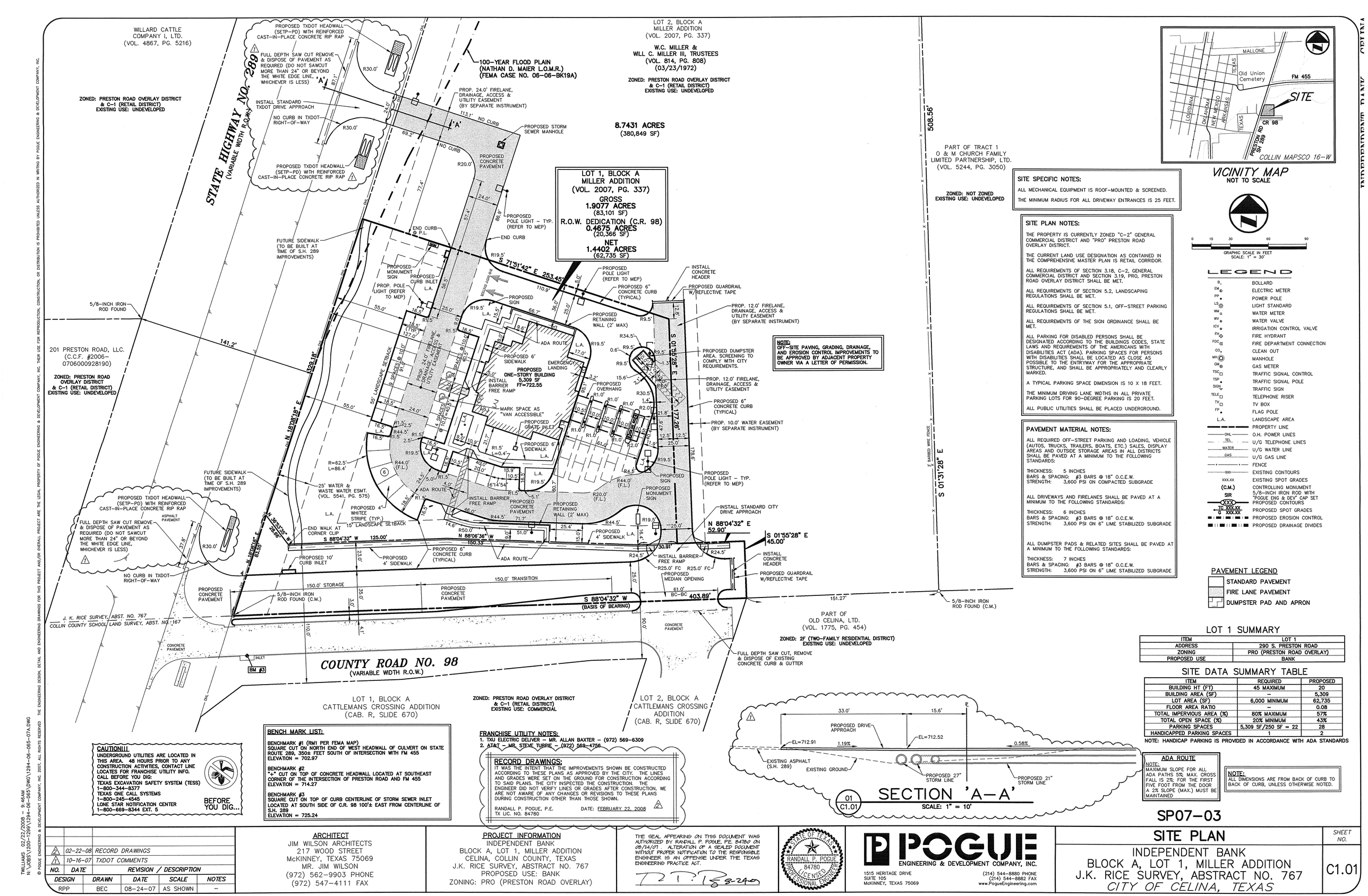

CAUTION!!!
UNDERGROUND UTILITIES ARE LOCATED IN THIS AREA. 48 HOURS PRIOR TO ANY CONSTRUCTION ACTIVITIES, CONTACT LINE LOCATES FOR FRANCHISE UTILITY INFO.
CALL BEFORE YOU DIG:
TEXAS EXCAVATION SAFETY SYSTEM (TESS) 1-800-344-8377
TEXAS ONE CALL SYSTEMS 1-800-245-4545
LONE STAR NOTIFICATION CENTER 1-800-669-8344 EXT. 5
BEFORE YOU DIG...

BENCH MARK LIST:

BENCHMARK #1 (RM1 PER FEMA MAP)
SQUARE CUT ON NORTH END OF WEST HEADWALL OF CULVERT ON STATE ROUTE 289, 350± FEET SOUTH OF INTERSECTION WITH FM 455
ELEVATION = 702.97

BENCHMARK #2
"+" CUT ON TOP OF CONCRETE HEADWALL LOCATED AT SOUTHEAST CORNER OF THE INTERSECTION OF PRESTON ROAD AND FM 455
ELEVATION = 714.27

BENCHMARK #3
SQUARE CUT ON TOP OF CURB CENTERLINE OF STORM SEWER INLET LOCATED AT SOUTH SIDE OF C.R. 98 100'± EAST FROM CENTERLINE OF S.H. 289
ELEVATION = 725.24

FRANCHISE UTILITY NOTES:
1. TXU ELECTRIC DELIVER - MR. ALLAN BAXTER - (972) 569-6309
2. AT&T - MR. STEVE TURBIE - (972) 569-4756

RECORD DRAWINGS:
IT WAS THE INTENT THAT THE IMPROVEMENTS SHOWN BE CONSTRUCTED ACCORDING TO THESE PLANS AS APPROVED BY THE CITY. THE LINES AND GRADES WERE SET ON THE GROUND FOR CONSTRUCTION ACCORDING TO SAID PLANS. THE CITY INSPECTED THE CONSTRUCTION. THE ENGINEER DID NOT VERIFY LINES OR GRADES AFTER CONSTRUCTION. WE ARE NOT AWARE OF ANY CHANGES OR REVISIONS TO THESE PLANS DURING CONSTRUCTION OTHER THAN THOSE SHOWN.
RANDALL P. POGUE, P.E. TX LIC. NO. 84780
DATE: FEBRUARY 22, 2008

VICINITY MAP
NOT TO SCALE

GRAPHIC SCALE IN FEET (0, 15, 30, 60, 90)
SCALE: 1" = 30'

SITE SPECIFIC NOTES:
ALL MECHANICAL EQUIPMENT IS ROOF-MOUNTED & SCREENED.
THE MINIMUM RADIUS FOR ALL DRIVEWAY ENTRANCES IS 25 FEET.

SITE PLAN NOTES:
THE PROPERTY IS CURRENTLY ZONED "C-2" GENERAL COMMERCIAL DISTRICT AND "PRO" PRESTON ROAD OVERLAY DISTRICT.
THE CURRENT LAND USE DESIGNATION AS CONTAINED IN THE COMPREHENSIVE MASTER PLAN IS RETAIL CORRIDOR.
ALL REQUIREMENTS OF SECTION 3.18, C-2, GENERAL COMMERCIAL DISTRICT AND SECTION 3.19, PRO, PRESTON ROAD OVERLAY DISTRICT SHALL BE MET.
ALL REQUIREMENTS OF SECTION 5.2, LANDSCAPING REGULATIONS SHALL BE MET.
ALL REQUIREMENTS OF SECTION 5.1, OFF-STREET PARKING REGULATIONS SHALL BE MET.
ALL REQUIREMENTS OF THE SIGN ORDINANCE SHALL BE MET.
ALL PARKING FOR DISABLED PERSONS SHALL BE DESIGNATED ACCORDING TO THE BUILDINGS CODES, STATE LAWS AND REQUIREMENTS OF THE AMERICANS WITH DISABILITIES ACT (ADA). PARKING SPACES FOR PERSONS WITH DISABILITIES SHALL BE LOCATED AS CLOSE AS POSSIBLE TO THE ENTRYWAY FOR THE APPROPRIATE STRUCTURE, AND SHALL BE APPROPRIATELY AND CLEARLY MARKED.
A TYPICAL PARKING SPACE DIMENSION IS 10 X 18 FEET.
THE MINIMUM DRIVING LANE WIDTHS IN ALL PRIVATE PARKING LOTS FOR 90-DEGREE PARKING IS 20 FEET.
ALL PUBLIC UTILITIES SHALL BE PLACED UNDERGROUND.

PAVEMENT MATERIAL NOTES:
ALL REQUIRED OFF-STREET PARKING AND LOADING, VEHICLE (AUTOS, TRUCKS, TRAILERS, BOATS, ETC.) SALES, DISPLAY AREAS AND OUTSIDE STORAGE AREAS IN ALL DISTRICTS SHALL BE PAVED AT A MINIMUM TO THE FOLLOWING STANDARDS:
THICKNESS: 5 INCHES
BARS & SPACING: #3 BARS @ 18" O.C.E.W.
STRENGTH: 3,600 PSI ON COMPACTED SUBGRADE
ALL DRIVEWAYS AND FIRELANES SHALL BE PAVED AT A MINIMUM TO THE FOLLOWING STANDARDS:
THICKNESS: 6 INCHES
BARS & SPACING: #3 BARS @ 18" O.C.E.W.
STRENGTH: 3,600 PSI ON 6" LIME STABILIZED SUBGRADE
ALL DUMPSTER PADS & RELATED SITES SHALL BE PAVED AT A MINIMUM TO THE FOLLOWING STANDARDS:
THICKNESS: 7 INCHES
BARS & SPACING: #3 BARS @ 18" O.C.E.W.
STRENGTH: 3,600 PSI ON 6" LIME STABILIZED SUBGRADE

LEGEND

B	BOLLARD
EM	ELECTRIC METER
PP	POWER POLE
LS	LIGHT STANDARD
WM	WATER METER
WV	WATER VALVE
ICV	IRRIGATION CONTROL VALVE
FH	FIRE HYDRANT
FDC	FIRE DEPARTMENT CONNECTION
CO	CLEAN OUT
MH	MANHOLE
GM	GAS METER
TSC	TRAFFIC SIGNAL CONTROL
TSP	TRAFFIC SIGNAL POLE
SIGN	TRAFFIC SIGN
TELE	TELEPHONE RISER
TV	TV BOX
FP	FLAG POLE
L.A.	LANDSCAPE AREA
	PROPERTY LINE
OHL	O.H. POWER LINES
TEL	U/G TELEPHONE LINES
WATER	U/G WATER LINE
GAS	U/G GAS LINE
	FENCE
500	EXISTING CONTOURS
XXX.XX	EXISTING SPOT GRADES
(C.M.)	CONTROLLING MONUMENT
SIR	5/8-INCH IRON ROD WITH "POGUE ENG & DEV" CAP SET
XXX TO XXX.XX	PROPOSED CONTOURS
G XXX.XX	PROPOSED SPOT GRADES
	PROPOSED EROSION CONTROL
	PROPOSED DRAINAGE DIVIDES

PAVEMENT LEGEND
STANDARD PAVEMENT
FIRE LANE PAVEMENT
DUMPSTER PAD AND APRON

LOT 1 SUMMARY

ITEM	LOT 1
ADDRESS	290 S. PRESTON ROAD
ZONING	PRO (PRESTON ROAD OVERLAY)
PROPOSED USE	BANK

SITE DATA SUMMARY TABLE

ITEM	REQUIRED	PROPOSED
BUILDING HT (FT)	45 MAXIMUM	20
BUILDING AREA (SF)	-	5,309
LOT AREA (SF)	6,000 MINIMUM	62,735
FLOOR AREA RATIO	-	0.08
TOTAL IMPERVIOUS AREA (%)	80% MAXIMUM	57%
TOTAL OPEN SPACE (%)	20% MINIMUM	43%
PARKING SPACES	5,309 SF/250 SF = 22	28
HANDICAPPED PARKING SPACES	1	2

NOTE: HANDICAP PARKING IS PROVIDED IN ACCORDANCE WITH ADA STANDARDS

ADA ROUTE
NOTE:
MAXIMUM SLOPE FOR ALL ADA PATHS 5%, MAX. CROSS FALL IS 2%. FOR THE FIRST FIVE FOOT FROM THE DOOR A 2% SLOPE (MAX.) MUST BE MAINTAINED.

NOTE:
ALL DIMENSIONS ARE FROM BACK OF CURB TO BACK OF CURB, UNLESS OTHERWISE NOTED.

SP07-03

NO.	DATE	REVISION / DESCRIPTION
2	02-22-08	RECORD DRAWINGS
1	10-16-07	TXDOT COMMENTS

DESIGN	DRAWN	DATE	SCALE	NOTES
RPP	BEC	08-24-07	AS SHOWN	-

ARCHITECT
JIM WILSON ARCHITECTS
217 WOOD STREET
McKINNEY, TEXAS 75069
MR. JIM WILSON
(972) 562-9903 PHONE
(972) 547-4111 FAX

PROJECT INFORMATION
INDEPENDENT BANK
BLOCK A, LOT 1, MILLER ADDITION
CELINA, COLLIN COUNTY, TEXAS
J.K. RICE SURVEY, ABSTRACT NO. 767
PROPOSED USE: BANK
ZONING: PRO (PRESTON ROAD OVERLAY)

THE SEAL APPEARING ON THIS DOCUMENT WAS AUTHORIZED BY RANDALL P. POGUE, P.E. 84780 ON 08/24/07. ALTERATION OF A SEALED DOCUMENT WITHOUT PROPER NOTIFICATION TO THE RESPONSIBLE ENGINEER IS AN OFFENSE UNDER THE TEXAS ENGINEERING PRACTICE ACT.

STATE OF TEXAS — RANDALL P. POGUE — 84780 — LICENSED PROFESSIONAL ENGINEER

POGUE ENGINEERING & DEVELOPMENT COMPANY, INC.
1515 HERITAGE DRIVE
SUITE 105
McKINNEY, TEXAS 75069
(214) 544-8880 PHONE
(214) 544-8882 FAX
www.PogueEngineering.com

SITE PLAN
INDEPENDENT BANK
BLOCK A, LOT 1, MILLER ADDITION
J.K. RICE SURVEY, ABSTRACT NO. 767
CITY OF CELINA, TEXAS

SHEET NO. C1.01

PI NO: 1294-06-065
DWG NO: 1294-06-065-07A.DWG
P-200708-01

TWILLIAMS 02/22/2008 - 9:46AM
N:\JOBS\2007-1294\1294-06-065\DWG\1294-06-065-07A.DWG
© POGUE ENGINEERING & DEVELOPMENT COMPANY, INC. 2007. ALL RIGHTS RESERVED. THE ENGINEERING DESIGN, DETAIL AND ENGINEERING DRAWINGS FOR THIS PROJECT AND/OR OVERALL PROJECT ARE THE LEGAL PROPERTY OF POGUE ENGINEERING & DEVELOPMENT COMPANY, INC. THEIR USE FOR REPRODUCTION, CONSTRUCTION, OR DISTRIBUTION IS PROHIBITED UNLESS AUTHORIZED IN WRITING BY POGUE ENGINEERING & DEVELOPMENT COMPANY, INC.

INDEPENDENT BANK – CELINA

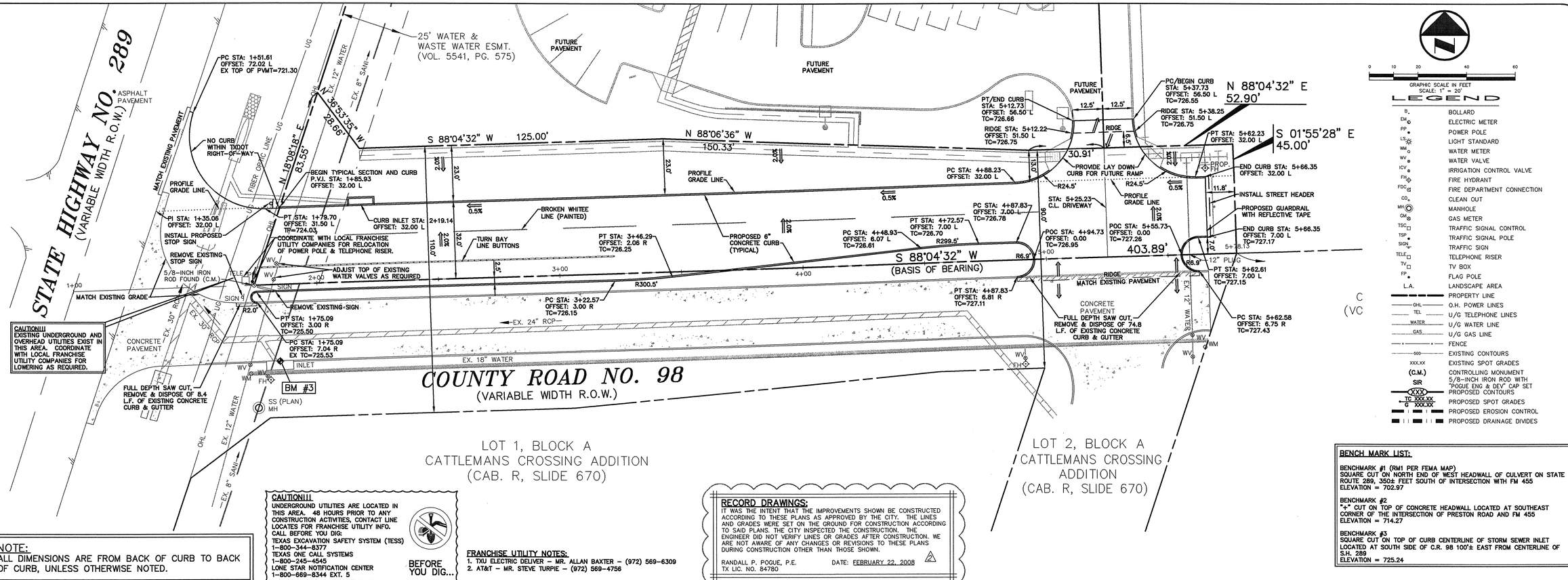

NOTE:
ALL DIMENSIONS ARE FROM BACK OF CURB TO BACK OF CURB, UNLESS OTHERWISE NOTED.

CAUTION!!!
UNDERGROUND UTILITIES ARE LOCATED IN THIS AREA. 48 HOURS PRIOR TO ANY CONSTRUCTION ACTIVITIES, CONTACT LINE LOCATES FOR FRANCHISE UTILITY INFO. CALL BEFORE YOU DIG:
TEXAS EXCAVATION SAFETY SYSTEM (TESS) 1-800-344-8377
TEXAS ONE CALL SYSTEMS 1-800-245-4545
LONE STAR NOTIFICATION CENTER 1-800-669-8344 EXT. 5
BEFORE YOU DIG...

FRANCHISE UTILITY NOTES:
1. TXU ELECTRIC DELIVER – MR. ALLAN BAXTER – (972) 569-6309
2. AT&T – MR. STEVE TURPIE – (972) 569-4756

RECORD DRAWINGS:
IT WAS THE INTENT THAT THE IMPROVEMENTS SHOWN BE CONSTRUCTED ACCORDING TO THESE PLANS AS APPROVED BY THE CITY. THE LINES AND GRADES WERE SET ON THE GROUND FOR CONSTRUCTION ACCORDING TO SAID PLANS. THE CITY INSPECTED THE CONSTRUCTION. THE ENGINEER DID NOT VERIFY LINES OR GRADES AFTER CONSTRUCTION. WE ARE NOT AWARE OF ANY CHANGES OR REVISIONS TO THESE PLANS DURING CONSTRUCTION OTHER THAN THOSE SHOWN.
RANDALL P. POGUE, P.E. TX LIC. NO. 84780
DATE: FEBRUARY 22, 2008

BENCH MARK LIST:
BENCHMARK #1 (RM1 PER FEMA MAP)
SQUARE CUT ON NORTH END OF WEST HEADWALL OF CULVERT ON STATE ROUTE 289, 350± FEET SOUTH OF INTERSECTION WITH FM 455
ELEVATION = 702.97
BENCHMARK #2
"+" CUT ON TOP OF CONCRETE HEADWALL LOCATED AT SOUTHEAST CORNER OF THE INTERSECTION OF PRESTON ROAD AND FM 455
ELEVATION = 714.27
BENCHMARK #3
SQUARE CUT ON TOP OF CURB CENTERLINE OF STORM SEWER INLET LOCATED AT SOUTH SIDE OF C.R. 98 100'± EAST FROM CENTERLINE OF S.H. 289
ELEVATION = 725.24

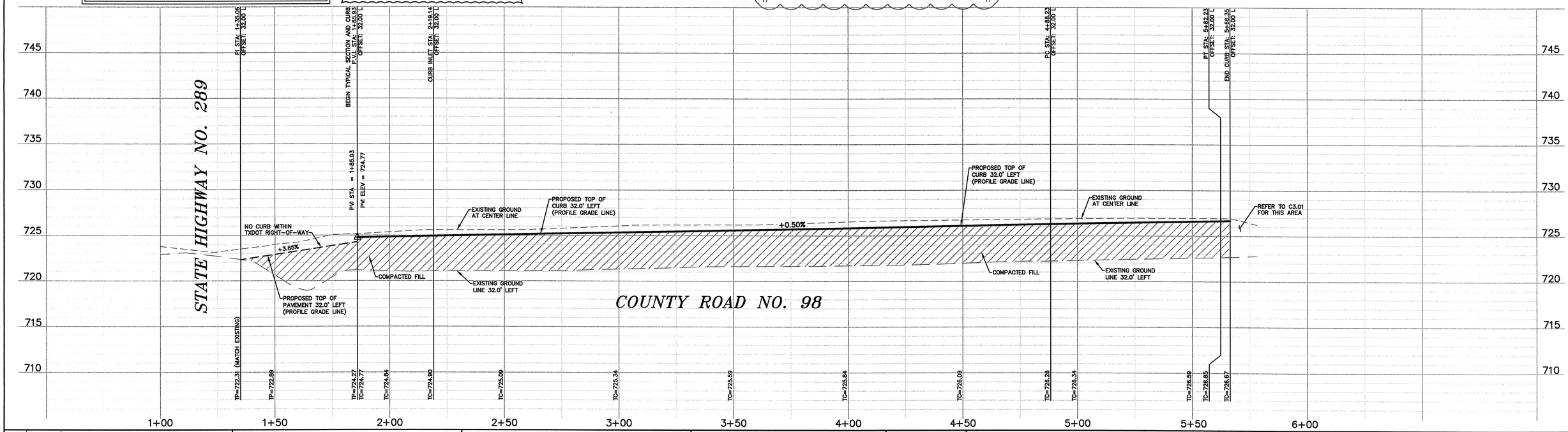

NO.	DATE	REVISION / DESCRIPTION
2	02-22-08	RECORD DRAWINGS
1	10-16-07	TXDOT COMMENTS

DESIGN	DRAWN	DATE	SCALE	NOTES
RPP	BEC	08-24-07	AS SHOWN	–

ARCHITECT
JIM WILSON ARCHITECTS
217 WOOD STREET
McKINNEY, TEXAS 75069
MR. JIM WILSON
(972) 562-9903 PHONE
(972) 547-4111 FAX

PROJECT INFORMATION
INDEPENDENT BANK
BLOCK A, LOT 1, MILLER ADDITION
CELINA, COLLIN COUNTY, TEXAS
J.K. RICE SURVEY, ABSTRACT NO. 767
PROPOSED USE: BANK
ZONING: PRO (PRESTON ROAD OVERLAY)

THE SEAL APPEARING ON THIS DOCUMENT WAS AUTHORIZED BY RANDALL P. POGUE, P.E. 84780 ON 08/24/07. ALTERATION OF A SEALED DOCUMENT WITHOUT PROPER NOTIFICATION TO THE RESPONSIBLE ENGINEER IS AN OFFENSE UNDER THE TEXAS ENGINEERING PRACTICE ACT.
8-24-07

STATE OF TEXAS · RANDALL P. POGUE · 84780 · LICENSED PROFESSIONAL ENGINEER

POGUE ENGINEERING & DEVELOPMENT COMPANY, INC.
1515 HERITAGE DRIVE
SUITE 105
McKINNEY, TEXAS 75069
(214) 544-8880 PHONE
(214) 544-8882 FAX
www.PogueEngineering.com

PAVING PLAN & PROFILE

INDEPENDENT BANK
BLOCK A, LOT 1, MILLER ADDITION
J.K. RICE SURVEY, ABSTRACT NO. 767
CITY OF CELINA, TEXAS

SHEET NO. C1.02

PI NO: 1294-06-065
DWG NO: 1294-06-065-07A.DWG
P-200708-01

TWILLIAMS 02/22/2008 - 9:46AM
N:\JOBS\1200-1299\1294-06-065\DWG\1294-06-065-07A.DWG
© POGUE ENGINEERING & DEVELOPMENT COMPANY, INC. 2007. ALL RIGHTS RESERVED. THE ENGINEERING DESIGN, DETAIL AND ENGINEERING DRAWINGS FOR THIS PROJECT AND/OR OVERALL PROJECT ARE THE LEGAL PROPERTY OF POGUE ENGINEERING & DEVELOPMENT COMPANY, INC. THEIR USE FOR REPRODUCTION, CONSTRUCTION, OR DISTRIBUTION IS PROHIBITED UNLESS AUTHORIZED IN WRITING BY POGUE ENGINEERING & DEVELOPMENT COMPANY, INC.

THE LEGAL PROPERTY OF POGUE ENGINEERING & DEVELOPMENT COMPANY, INC. THEIR USE FOR REPRODUCTION, CONSTRUCTION, OR DISTRIBUTION IS PROHIBITED UNLESS AUTHORIZED IN WRITING BY POGUE ENGINEERING & DEVELOPMENT COMPANY, INC.
© POGUE ENGINEERING & DEVELOPMENT COMPANY, INC. 2007, ALL RIGHTS RESERVED THE ENGINEERING DESIGN, DETAIL AND ENGINEERING DRAWINGS FOR THIS PROJECT AND/OR OVERALL PROJECT ARE THE LEGAL PROPERTY OF POGUE ENGINEERING & DEVELOPMENT COMPANY, INC. THEIR USE FOR REPRODUCTION, CONSTRUCTION, OR DISTRIBUTION IS PROHIBITED UNLESS AUTHORIZED IN WRITING BY POGUE ENGINEERING & DEVELOPMENT COMPANY, INC.

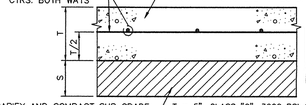

PAVEMENT LEGEND

STANDARD PAVEMENT

FIRE LANE PAVEMENT

DUMPSTER PAD AND APRON

SCARIFY AND COMPACT SUB GRADE AT A MINIMUM OF 95% MAX. DRY DENSITY (STD. PROCTOR) AT A MOISTURE CONTENT BETWEEN OPTIMUM AND 3% ABOVE OPTIMUM. LIME STABILIZE SUB-GRADE, 6% (BY DRY UNIT WEIGHT).

T = 5", CLASS "C", 3600 PSI @ 28 DAYS – PARKING AREAS
T = 6", CLASS "C", 3600 PSI @ 28 DAYS – DRIVES AND FIRE LANES
T = 7", CLASS "C", 3600 PSI @ 28 DAYS – DUMPSTER PAD AND APPROACH
S = 6" DEPTH OF MODIFIED SUB GRADE

* ALL CONCRETE TO HAVE 4.5% ±1.5% ENTRAINED AIR WITH A MAXIMUM SLUMP=5"

FLY ASH MAY BE SUBSTITUTED FOR UP TO A MAX. OF 20% OF THE REQUIRED PORTLAND CEMENT IN CONCRETE (PER ASTM C 989 & C 595) IN MACHINE PLACED CONCRETE ONLY.

01 C1.03 **PAVEMENT SECTION**
NOT TO SCALE

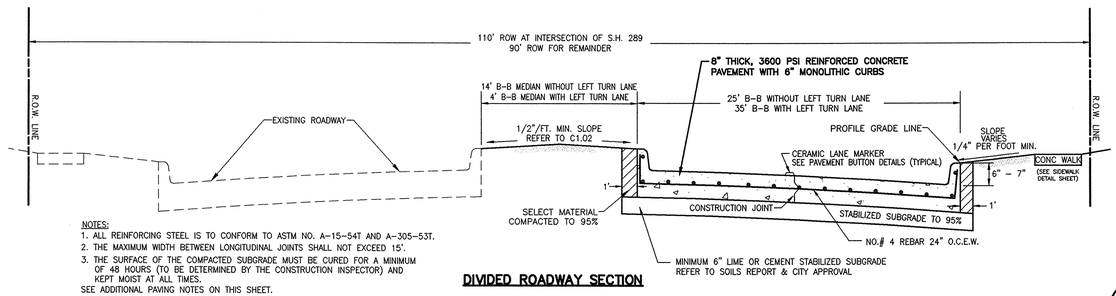

NOTES:
1. ALL REINFORCING STEEL IS TO CONFORM TO ASTM NO. A-15-54T AND A-305-53T.
2. THE MAXIMUM WIDTH BETWEEN LONGITUDINAL JOINTS SHALL NOT EXCEED 15'.
3. THE SURFACE OF THE COMPACTED SUBGRADE MUST BE CURED FOR A MINIMUM OF 48 HOURS (TO BE DETERMINED BY THE CONSTRUCTION INSPECTOR) AND KEPT MOIST AT ALL TIMES.

SEE ADDITIONAL PAVING NOTES ON THIS SHEET.

DIVIDED ROADWAY SECTION

02 C1.03 **ROADWAY SECTION**
NOT TO SCALE

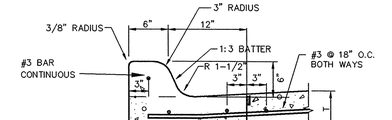

03 C1.03 **CONCRETE CURB**
NOT TO SCALE

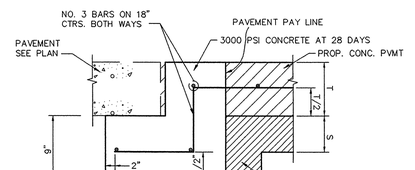

NOTE:
PAVEMENT BARS TO BE BENT DOWN INTO HEADER. HEADER PAVEMENT TO BE MONOLITHIC.

04 C1.03 **STREET HEADER**
NOT TO SCALE

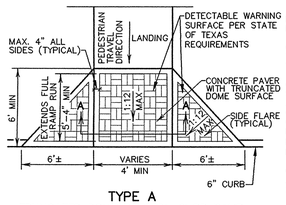

TYPE A
TRUNCATED DOME PATTERN CURB RAMP

GENERAL NOTES

CONCRETE PAVER UNITS SHALL MEET ALL REQUIREMENTS OF ASTM C-936, C-33, AND SHALL BE LAID IN A TWO BY TWO UNIT BASKET WEAVE PATTERN, UNLESS SHOWN OTHERWISE IN THE PLANS.

DOMES SHALL BE ALIGNED IN THE DIRECTION OF PEDESTRIAN TRAVEL.

CONCRETE PAVER UNITS SHALL HAVE A TRUNCATED DOME TOP SURFACE FOR DETECTABLE WARNING TO PEDESTRIANS.

CONCRETE PAVER UNIT COLOR FOR THE RAMP SHALL BE A CONTRASTING COLOR THAT PROVIDES A LIGHT REFLECTIVE VALUE THAT SIGNIFICANTLY CONTRASTS WITH THE ADJACENT SURFACES. THE COLOR OF THE CONCRETE PAVER UNITS SHALL BE RED, UNLESS SHOWN ELSEWHERE IN THE PLANS. (ADJACENT SURFACES INCLUDE SIDE FLARES).

CONCRETE PAVER UNITS SHALL BE SAW CUT ONLY AND ANY CUT UNIT SHALL NOT BE LESS THAN 25 PERCENT OF A FULL UNIT.

LANDINGS SHALL BE 5'X 5' MINIMUM WITH A MAXIMUM 2% SLOPE IN ANY DIRECTION.

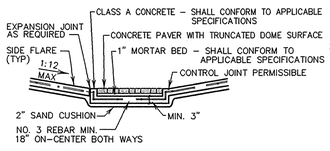

SECTION A–A

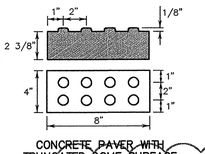

CONCRETE PAVER WITH TRUNCATED DOME SURFACE

08 C1.03 **BARRIER FREE RAMP**
NOT TO SCALE

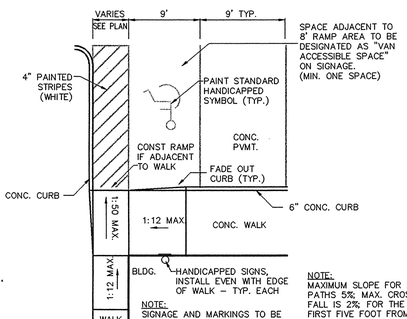

NOTE:
SIGNAGE AND MARKINGS TO BE IN ACCORDANCE WITH FEDERAL STATE AND LOCAL REGULATIONS.

NOTE:
MAXIMUM SLOPE FOR ALL PATHS 5%. MAX. CROSS FALL IS 2%. FOR THE FIRST FIVE FOOT FROM THE DOOR A 2% SLOPE (MAX.) MUST BE MAINTAINED

14 C1.03 **HANDICAPPED PARKING**
NOT TO SCALE

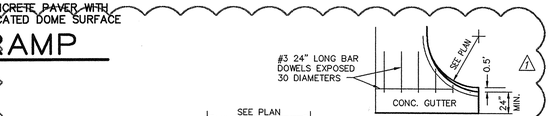

15 C1.03 **C.R. 98 DRIVEWAY APPROACH**
NOT TO SCALE

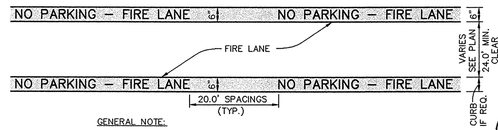

GENERAL NOTE:

A. STRIPING TO BE DONE IN ACCORDANCE WITH CITY STANDARDS. THE PAVEMENT MARKINGS SHALL BE FROM THE TOP OF THE SEAM OF THE CURB TO A POINT EVEN WITH THE DRIVING SURFACE.

STRIPING DETAIL:

A. PAINT:
1. STRIPE SHALL BE SIX (6) INCHES WIDE PAINTED WITH AN EXTERIOR ACRYLIC LATEX PAINT.
   A. COLOR SHALL BE "TRAFFIC RED" GLIDDEN NO. 63251 OR EQUAL.
2. LETTERS SHALL BE FOUR (4) INCHES HIGH PAINTED WITH AN EXTERIOR ACRYLIC LATEX PAINT. LETTERS TO BE ONE (1) INCH STROKE.
   B. COLOR SHALL BE "TRAFFIC WHITE" GLIDDEN NO. 563245 OR EQUAL.

B. APPLICATION:
1. STRIPE MAY BE BRUSHED OR SPRAYED, ONE COAT TO FINISH.
2. LETTERS SHALL BE STENCIL FORMED, BRUSH APPLIED AND SPACED AS DETAILED ON THIS SHEET.

16 C1.03 **FIRE LANE STRIPING**
NOT TO SCALE

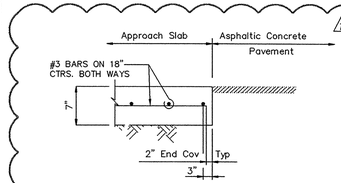

S.H. 289
DRIVEWAY CONNECTION
NOT TO SCALE

17 C1.03

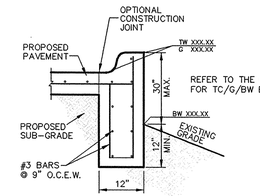

18 C1.03 **CURB W/WALL**
NOT TO SCALE

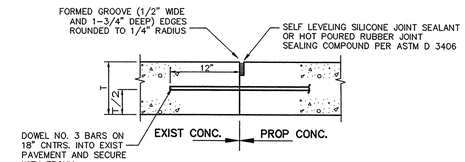

06 C1.03 **PAVEMENT CONNECTION**
NOT TO SCALE

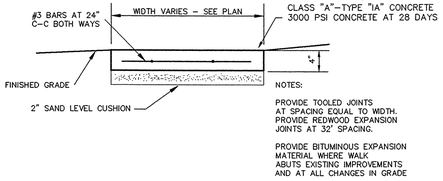

NOTES:

PROVIDE TOOLED JOINTS AT SPACING EQUAL TO WIDTH. PROVIDE REDWOOD EXPANSION JOINTS AT 32' SPACING.

PROVIDE BITUMINOUS EXPANSION MATERIAL WHERE WALK ABUTS EXISTING IMPROVEMENTS AND AT ALL CHANGES IN GRADE

07 C1.03 **CONCRETE SIDEWALK**
NOT TO SCALE

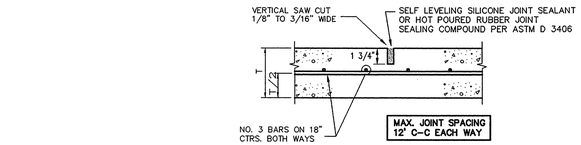

09 C1.03 **SAWED DUMMY JOINT**
NOT TO SCALE

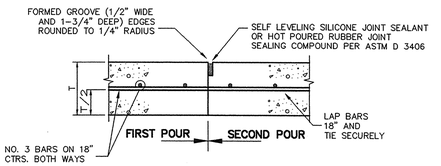

10 C1.03 **CONSTRUCTION JOINT**
NOT TO SCALE

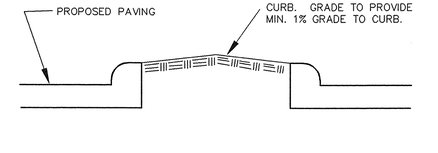

12 C1.03 **ISLAND BACK FILL**
NOT TO SCALE

NON–TXDOT DRIVE CROSS SECTION

19 C1.03
NOT TO SCALE

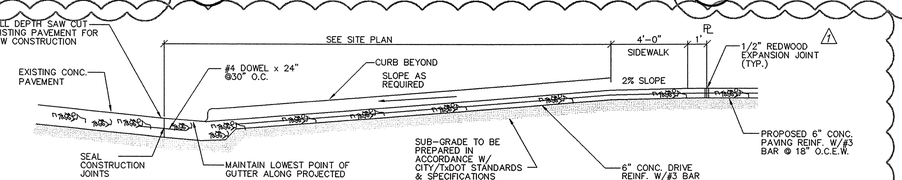

RECORD DRAWINGS:

IT WAS THE INTENT THAT THE IMPROVEMENTS SHOWN BE CONSTRUCTED ACCORDING TO THESE PLANS AS APPROVED BY THE CITY. THE LINES AND GRADES WERE SET ON THE GROUND FOR CONSTRUCTION ACCORDING TO SAID PLANS. THE CITY INSPECTED THE CONSTRUCTION. THE ENGINEER DID NOT VERIFY LINES OR GRADES AFTER CONSTRUCTION. WE ARE NOT AWARE OF ANY CHANGES OR REVISIONS TO THESE PLANS DURING CONSTRUCTION OTHER THAN THOSE SHOWN.

RANDALL P. POGUE, P.E. DATE: FEBRUARY 22, 2008
TX LIC. NO. 84780

NO.	DATE	REVISION / DESCRIPTION
2	02-22-08	RECORD DRAWINGS
1	10-16-07	TXDOT COMMENTS

DESIGN	DRAWN	DATE	SCALE	NOTES
RPP	BEC	08-24-07	AS SHOWN	–

ARCHITECT
JIM WILSON ARCHITECTS
217 WOOD STREET
McKINNEY, TEXAS 75069
MR. JIM WILSON
(972) 562-9903 PHONE
(972) 547-4111 FAX

PROJECT INFORMATION
INDEPENDENT BANK
BLOCK A, LOT 1, MILLER ADDITION
CELINA, COLLIN COUNTY, TEXAS
J.K. RICE SURVEY, ABSTRACT NO. 767
PROPOSED USE: BANK
ZONING: PRO (PRESTON ROAD OVERLAY)

THE SEAL APPEARING ON THIS DOCUMENT WAS AUTHORIZED BY RANDALL P. POGUE, P.E. 84780 ON 08/24/07. ALTERATION OF A SEALED DOCUMENT WITHOUT PROPER NOTIFICATION TO THE RESPONSIBLE ENGINEER IS AN OFFENSE UNDER THE TEXAS ENGINEERING PRACTICE ACT.

STATE OF TEXAS · RANDALL P. POGUE · 84780 · LICENSED · PROFESSIONAL ENGINEER

POGUE
ENGINEERING & DEVELOPMENT COMPANY, INC.
1515 HERITAGE DRIVE
SUITE 105
McKINNEY, TEXAS 75069
(214) 544-8880 PHONE
(214) 544-8882 FAX
www.PogueEngineering.com

STANDARD DETAILS SHEET

INDEPENDENT BANK
BLOCK A, LOT 1, MILLER ADDITION
J.K. RICE SURVEY, ABSTRACT NO. 767
CITY OF CELINA, TEXAS

SHEET NO. C1.03

PI NO: 1294-06-065

DWG NO: 1294-06-065-07A.DWG

P-200708-01

TWILLIAMS 02/22/2008 – 9:46AM
N:\JOBS\1200-1299\1294-06-065\DWG\1294-06-065-07A.DWG

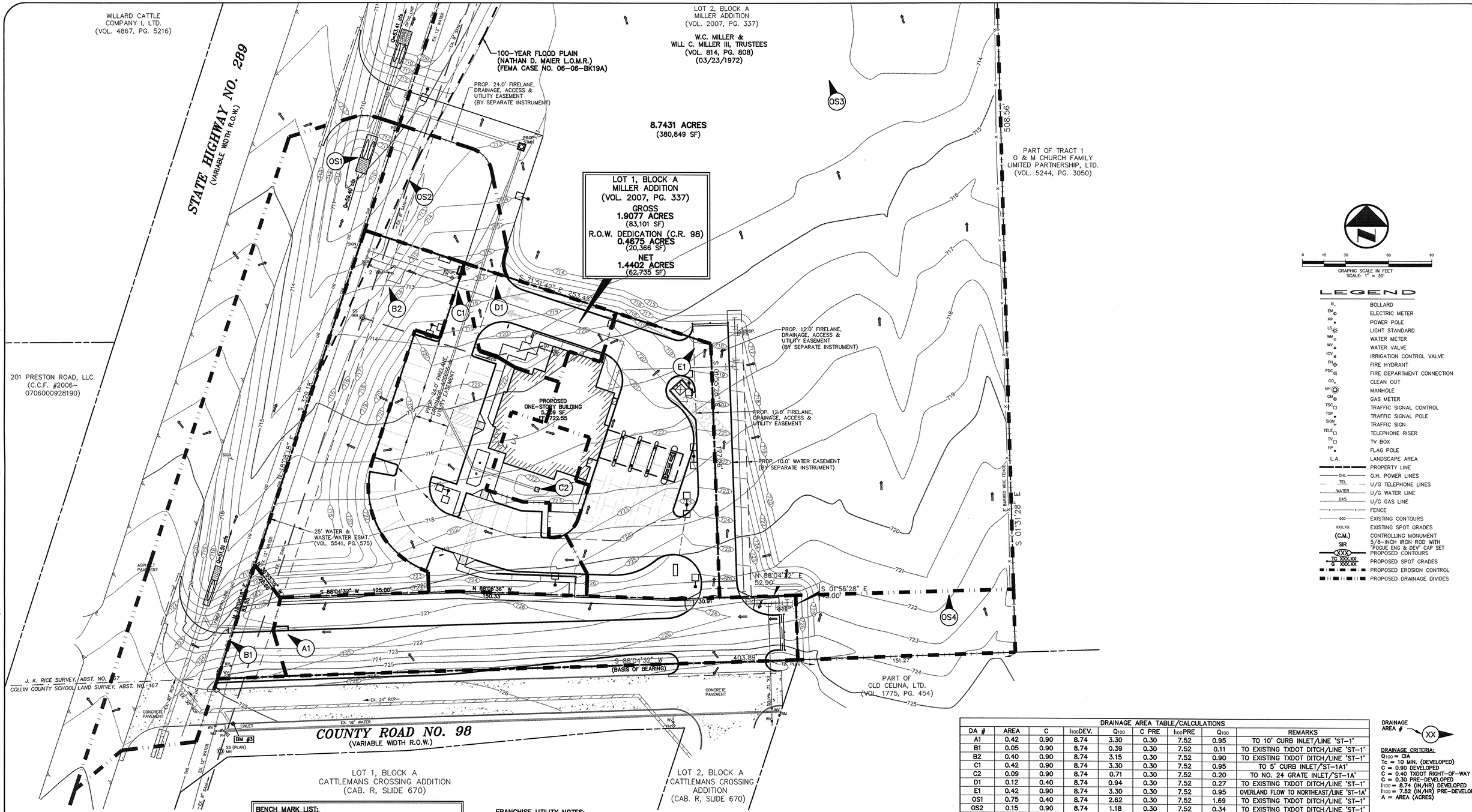

0 15 30 60 90
GRAPHIC SCALE IN FEET
SCALE: 1" = 30'

LEGEND

B	BOLLARD
EM	ELECTRIC METER
PP	POWER POLE
LS	LIGHT STANDARD
WM	WATER METER
WV	WATER VALVE
ICV	IRRIGATION CONTROL VALVE
FH	FIRE HYDRANT
FDC	FIRE DEPARTMENT CONNECTION
CO	CLEAN OUT
MH	MANHOLE
GM	GAS METER
TSC	TRAFFIC SIGNAL CONTROL
TSP	TRAFFIC SIGNAL POLE
SIGN	TRAFFIC SIGN
TELE	TELEPHONE RISER
TV	TV BOX
FP	FLAG POLE
L.A.	LANDSCAPE AREA
	PROPERTY LINE
OHL	O.H. POWER LINES
TEL	U/G TELEPHONE LINES
WATER	U/G WATER LINE
GAS	U/G GAS LINE
	FENCE
500	EXISTING CONTOURS
XXX.XX	EXISTING SPOT GRADES
(C.M.)	CONTROLLING MONUMENT
SIR	5/8-INCH IRON ROD WITH "POGUE ENG & DEV" CAP SET
XXX	PROPOSED CONTOURS
TC XXX.XX G XXX.XX	PROPOSED SPOT GRADES
	PROPOSED EROSION CONTROL
	PROPOSED DRAINAGE DIVIDES

DRAINAGE AREA TABLE/CALCULATIONS								
DA #	AREA	C	I_{100}DEV.	Q_{100}	C PRE	I_{100}PRE	Q_{100}	REMARKS
A1	0.42	0.90	8.74	3.30	0.30	7.52	0.95	TO 10' CURB INLET/LINE 'ST-1'
B1	0.05	0.90	8.74	0.39	0.30	7.52	0.11	TO EXISTING TXDOT DITCH/LINE 'ST-1'
B2	0.40	0.90	8.74	3.15	0.30	7.52	0.90	TO EXISTING TXDOT DITCH/LINE 'ST-1'
C1	0.42	0.90	8.74	3.30	0.30	7.52	0.95	TO 5' CURB INLET/'ST-1A1'
C2	0.09	0.90	8.74	0.71	0.30	7.52	0.20	TO NO. 24 GRATE INLET/'ST-1A'
D1	0.12	0.40	8.74	0.94	0.30	7.52	0.27	TO EXISTING TXDOT DITCH/LINE 'ST-1'
E1	0.42	0.90	8.74	3.30	0.30	7.52	0.95	OVERLAND FLOW TO NORTHEAST/LINE 'ST-1A'
OS1	0.75	0.40	8.74	2.62	0.30	7.52	1.69	TO EXISTING TXDOT DITCH/LINE 'ST-1'
OS2	0.15	0.90	8.74	1.18	0.30	7.52	0.34	TO EXISTING TXDOT DITCH/LINE 'ST-1'
OS3	6.54	0.90	8.74	51.44	0.30	7.52	14.75	REMAINDER OF LOT 2 TO DOE BRANCH CREEK
OS4	0.15	0.90	8.74	1.18	0.30	7.52	0.34	TO THE EAST/FUTURE C.R. 98 SYSTEM

DRAINAGE AREA # XX

DRAINAGE CRITERIA:
Q_{100} = CIA
Tc = 10 MIN. (DEVELOPED)
C = 0.90 DEVELOPED
C = 0.40 TXDOT RIGHT-OF-WAY
C = 0.30 PRE-DEVELOPED
I_{100} = 8.74 (IN/HR) DEVELOPED
I_{100} = 7.52 (IN/HR) PRE-DEVELOPED
A = AREA (ACRES)

CAUTION!!!
UNDERGROUND UTILITIES ARE LOCATED IN THIS AREA. 48 HOURS PRIOR TO ANY CONSTRUCTION ACTIVITIES, CONTACT LINE LOCATES FOR FRANCHISE UTILITY INFO. CALL BEFORE YOU DIG:
TEXAS EXCAVATION SAFETY SYSTEM (TESS) 1-800-344-8377
TEXAS ONE CALL SYSTEMS 1-800-245-4545
LONE STAR NOTIFICATION CENTER 1-800-669-8344 EXT. 5
BEFORE YOU DIG...

BENCH MARK LIST:

BENCHMARK #1 (RM1 PER FEMA MAP)
SQUARE CUT ON NORTH END OF WEST HEADWALL OF CULVERT ON STATE ROUTE 289, 350± FEET SOUTH OF INTERSECTION WITH FM 455
ELEVATION = 702.97

BENCHMARK #2
"+" CUT ON TOP OF CONCRETE HEADWALL LOCATED AT SOUTHEAST CORNER OF THE INTERSECTION OF PRESTON ROAD AND FM 455
ELEVATION = 714.27

BENCHMARK #3
SQUARE CUT ON TOP OF CURB CENTERLINE OF STORM SEWER INLET LOCATED AT SOUTH SIDE OF C.R. 98 100'± EAST FROM CENTERLINE OF S.H. 289
ELEVATION = 725.24

FRANCHISE UTILITY NOTES:
1. TXU ELECTRIC DELIVER – MR. ALLAN BAXTER – (972) 569-6309
2. AT&T – MR. STEVE TURPIE – (972) 569-4756

RECORD DRAWINGS:
IT WAS THE INTENT THAT THE IMPROVEMENTS SHOWN BE CONSTRUCTED ACCORDING TO THESE PLANS AS APPROVED BY THE CITY. THE LINES AND GRADES WERE SET ON THE GROUND FOR CONSTRUCTION ACCORDING TO SAID PLANS. THE CITY INSPECTED THE CONSTRUCTION. THE ENGINEER DID NOT VERIFY LINES OR GRADES AFTER CONSTRUCTION. WE ARE NOT AWARE OF ANY CHANGES OR REVISIONS TO THESE PLANS DURING CONSTRUCTION OTHER THAN THOSE SHOWN.

RANDALL P. POGUE, P.E.
TX LIC. NO. 84780
DATE: FEBRUARY 22, 2008

NO.	DATE	REVISION / DESCRIPTION
2	02-22-08	RECORD DRAWINGS
1	10-16-07	TXDOT COMMENTS

DESIGN	DRAWN	DATE	SCALE	NOTES
RPP	BEC	08-24-07	AS SHOWN	–

ARCHITECT
JIM WILSON ARCHITECTS
217 WOOD STREET
McKINNEY, TEXAS 75069
MR. JIM WILSON
(972) 562-9903 PHONE
(972) 547-4111 FAX

PROJECT INFORMATION
INDEPENDENT BANK
BLOCK A, LOT 1, MILLER ADDITION
CELINA, COLLIN COUNTY, TEXAS
J.K. RICE SURVEY, ABSTRACT NO. 767
PROPOSED USE: BANK
ZONING: PRO (PRESTON ROAD OVERLAY)

THE SEAL APPEARING ON THIS DOCUMENT WAS AUTHORIZED BY RANDALL P. POGUE, P.E. 84780 ON 08/14/07. ALTERATION OF A SEALED DOCUMENT WITHOUT PROPER NOTIFICATION TO THE RESPONSIBLE ENGINEER IS AN OFFENSE UNDER THE TEXAS ENGINEERING PRACTICE ACT.

STATE OF TEXAS · RANDALL P. POGUE · 84780 · LICENSED PROFESSIONAL ENGINEER

POGUE ENGINEERING & DEVELOPMENT COMPANY, INC.
1515 HERITAGE DRIVE
SUITE 105
McKINNEY, TEXAS 75069
(214) 544-8880 PHONE
(214) 544-8882 FAX
www.PogueEngineering.com

DRAINAGE AREA MAP

INDEPENDENT BANK
BLOCK A, LOT 1, MILLER ADDITION
J.K. RICE SURVEY, ABSTRACT NO. 767
CITY OF CELINA, TEXAS

SHEET NO. C2.01

PI NO: 1294-06-065

DWG NO: 1294-06-065-07A.DWG

P-200708-01

INDEPENDENT BANK – CELINA

© POGUE ENGINEERING & DEVELOPMENT COMPANY, INC. 2007. ALL RIGHTS RESERVED. THE ENGINEERING DESIGN, DETAIL AND ENGINEERING DRAWINGS FOR THIS PROJECT AND/OR OVERALL PROJECT ARE THE LEGAL PROPERTY OF POGUE ENGINEERING & DEVELOPMENT COMPANY, INC. THEIR USE FOR REPRODUCTION, CONSTRUCTION, OR DISTRIBUTION IS PROHIBITED UNLESS AUTHORIZED IN WRITING BY POGUE ENGINEERING & DEVELOPMENT COMPANY, INC.

TWILLIAMS 02/22/2008 - 8:47AM
N:\JOBS\1200-1299\1294-06-065\DWG\1294-06-065-07A.DWG

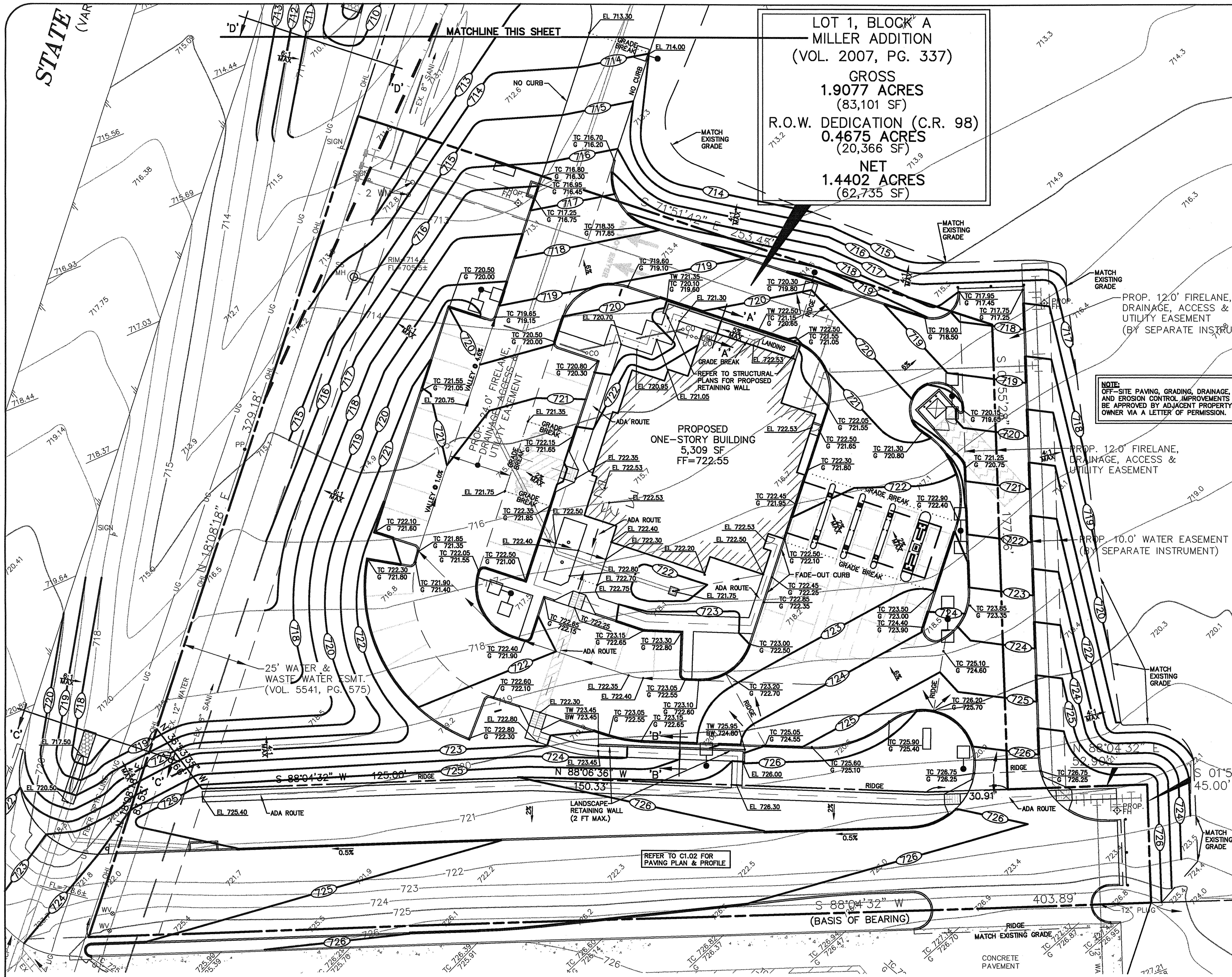

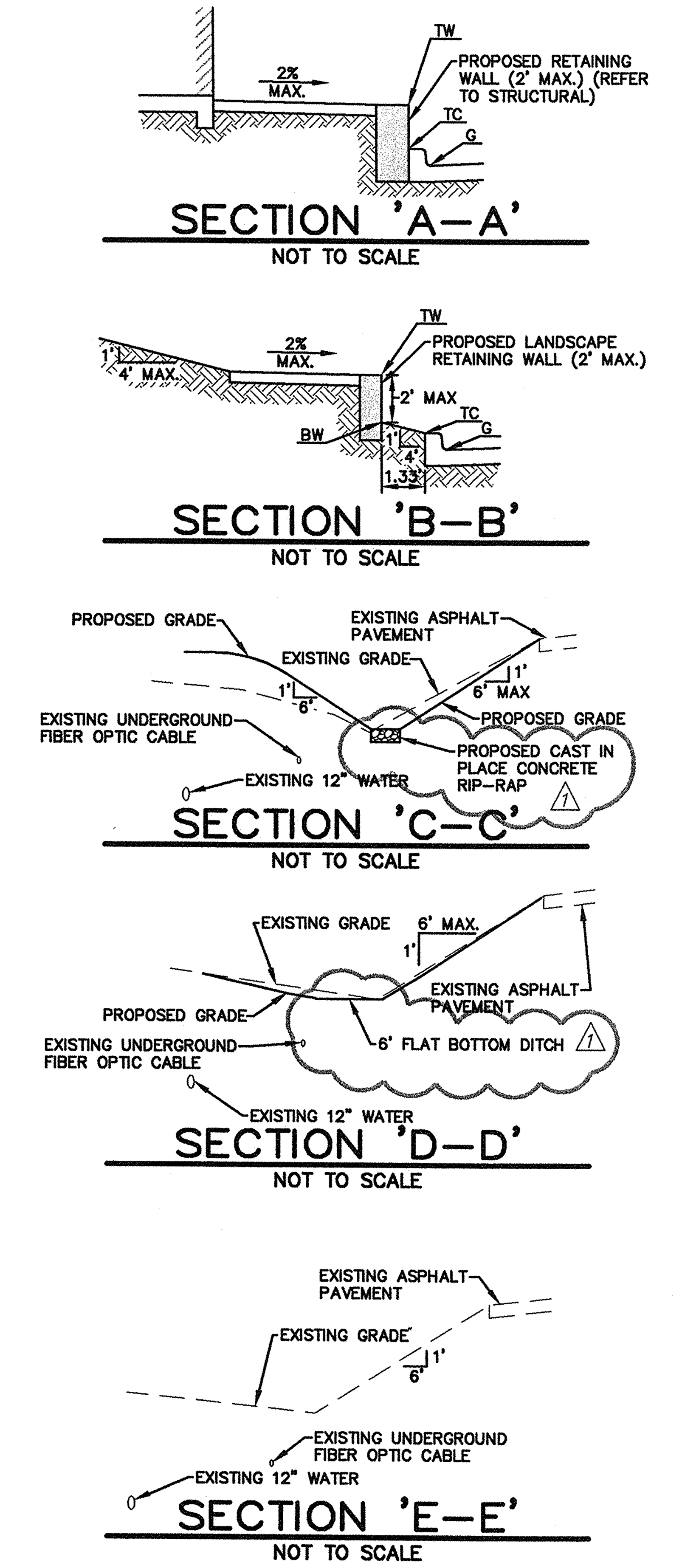

GRAPHIC SCALE IN FEET
SCALE: 1" = 20'

LEGEND

B.	BOLLARD
EM	ELECTRIC METER
PP	POWER POLE
LS	LIGHT STANDARD
WM	WATER METER
WV	WATER VALVE
ICV	IRRIGATION CONTROL VALVE
FH	FIRE HYDRANT
FDC	FIRE DEPARTMENT CONNECTION
CO	CLEAN OUT
MH	MANHOLE
GM	GAS METER
TSC	TRAFFIC SIGNAL CONTROL
TSP	TRAFFIC SIGNAL POLE
SIGN	TRAFFIC SIGN
TELE	TELEPHONE RISER
TV	TV BOX
FP	FLAG POLE
L.A.	LANDSCAPE AREA
	PROPERTY LINE
OHL	O.H. POWER LINES
TEL	U/G TELEPHONE LINES
WATER	U/G WATER LINE
GAS	U/G GAS LINE
x	FENCE
500	EXISTING CONTOURS
XXX.XX	EXISTING SPOT GRADES
(C.M.)	CONTROLLING MONUMENT
SIR	5/8-INCH IRON ROD WITH "POGUE ENG & DEV" CAP SET
XXX	PROPOSED CONTOURS
TC XXX.XX G XXX.XX	PROPOSED SPOT GRADES
	PROPOSED EROSION CONTROL
	PROPOSED DRAINAGE DIVIDES

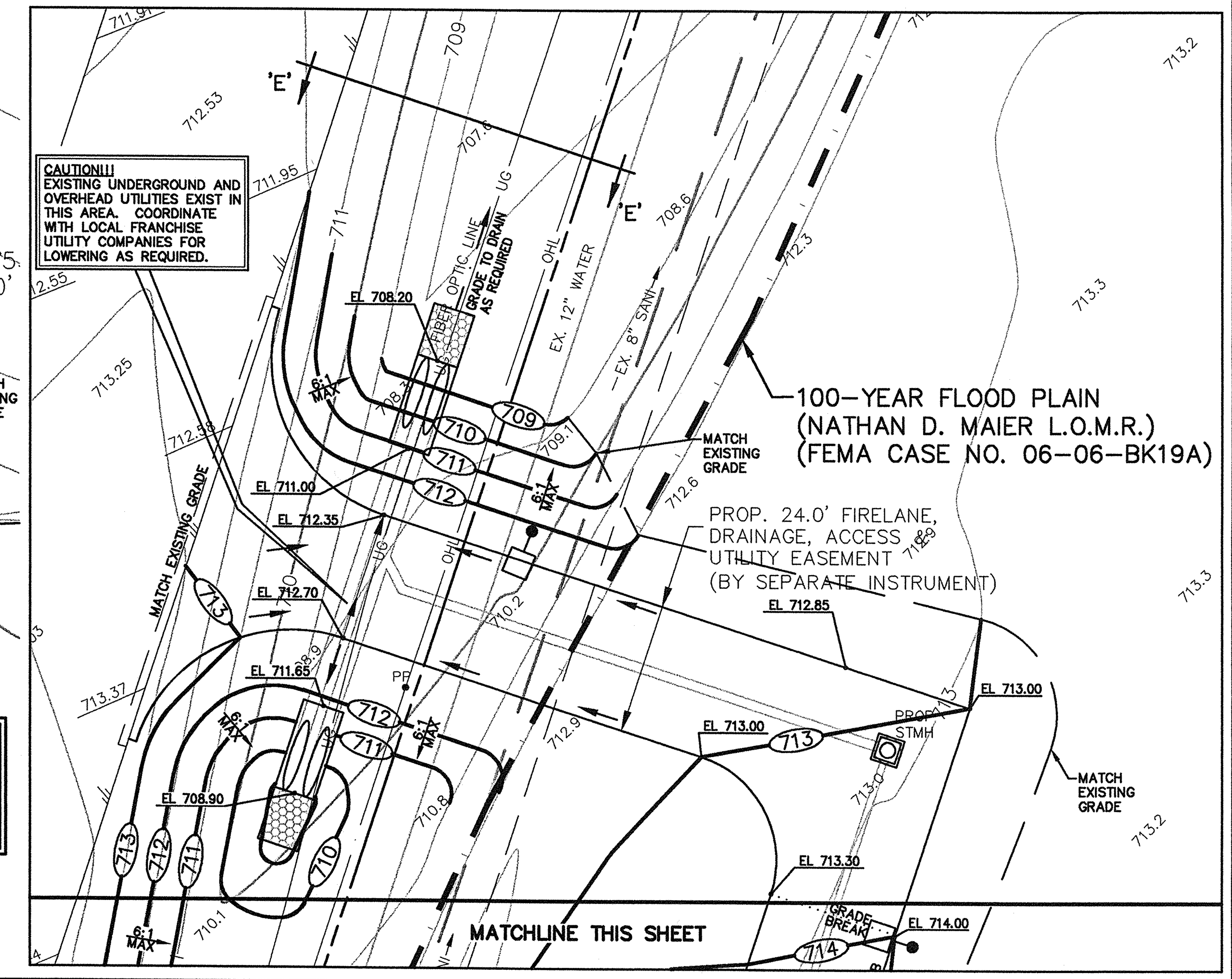

CAUTION!!!
UNDERGROUND UTILITIES ARE LOCATED IN THIS AREA. 48 HOURS PRIOR TO ANY CONSTRUCTION ACTIVITIES, CONTACT LINE LOCATES FOR FRANCHISE UTILITY INFO.
CALL BEFORE YOU DIG:
TEXAS EXCAVATION SAFETY SYSTEM (TESS)
1-800-344-8377
TEXAS ONE CALL SYSTEMS
1-800-245-4545
LONE STAR NOTIFICATION CENTER
1-800-669-8344 EXT. 5
BEFORE YOU DIG...

FRANCHISE UTILITY NOTES:
1. TXU ELECTRIC DELIVER – MR. ALLAN BAXTER – (972) 569-6309
2. AT&T – MR. STEVE TURPIE – (972) 569-4756

RECORD DRAWINGS:
IT WAS THE INTENT THAT THE IMPROVEMENTS SHOWN BE CONSTRUCTED ACCORDING TO THESE PLANS AS APPROVED BY THE CITY. THE LINES AND GRADES WERE SET ON THE GROUND FOR CONSTRUCTION ACCORDING TO SAID PLANS. THE CITY INSPECTED THE CONSTRUCTION. THE ENGINEER DID NOT VERIFY LINES OR GRADES AFTER CONSTRUCTION. WE ARE NOT AWARE OF ANY CHANGES OR REVISIONS TO THESE PLANS DURING CONSTRUCTION OTHER THAN THOSE SHOWN.
RANDALL P. POGUE, P.E. DATE: FEBRUARY 22, 2008 2
TX LIC. NO. 84780

BENCH MARK LIST:

BENCHMARK #1 (RM1 PER FEMA MAP)
SQUARE CUT ON NORTH END OF WEST HEADWALL OF CULVERT ON STATE ROUTE 289, 350± FEET SOUTH OF INTERSECTION WITH FM 455
ELEVATION = 702.97

BENCHMARK #2
"+" CUT ON TOP OF CONCRETE HEADWALL LOCATED AT SOUTHEAST CORNER OF THE INTERSECTION OF PRESTON ROAD AND FM 455
ELEVATION = 714.27

BENCHMARK #3
SQUARE CUT ON TOP OF CURB CENTERLINE OF STORM SEWER INLET LOCATED AT SOUTH SIDE OF C.R. 98 100'± EAST FROM CENTERLINE OF S.H. 289
ELEVATION = 725.24

ADA ROUTE
NOTE:
MAXIMUM SLOPE FOR ALL ADA PATHS 5%; MAX. CROSS FALL IS 2%; FOR THE FIRST FIVE FOOT FROM THE DOOR A 2% SLOPE (MAX.) MUST BE MAINTAINED

NO.	DATE	REVISION / DESCRIPTION
2	02-22-08	RECORD DRAWINGS
1	10-16-07	TXDOT COMMENTS

DESIGN	DRAWN	DATE	SCALE	NOTES
RPP	BEC	08-24-07	AS SHOWN	–

ARCHITECT
JIM WILSON ARCHITECTS
217 WOOD STREET
McKINNEY, TEXAS 75069
MR. JIM WILSON
(972) 562-9903 PHONE
(972) 547-4111 FAX

PROJECT INFORMATION
INDEPENDENT BANK
BLOCK A, LOT 1, MILLER ADDITION
CELINA, COLLIN COUNTY, TEXAS
J.K. RICE SURVEY, ABSTRACT NO. 767
PROPOSED USE: BANK
ZONING: PRO (PRESTON ROAD OVERLAY)

THE SEAL APPEARING ON THIS DOCUMENT WAS AUTHORIZED BY RANDALL P. POGUE, P.E. 84780 ON 08/24/07. ALTERATION OF A SEALED DOCUMENT WITHOUT PROPER NOTIFICATION TO THE RESPONSIBLE ENGINEER IS AN OFFENSE UNDER THE TEXAS ENGINEERING PRACTICE ACT.

STATE OF TEXAS — RANDALL P. POGUE — 84780 — LICENSED PROFESSIONAL ENGINEER

POGUE ENGINEERING & DEVELOPMENT COMPANY, INC.
1515 HERITAGE DRIVE
SUITE 105
McKINNEY, TEXAS 75069
(214) 544-8880 PHONE
(214) 544-8882 FAX
www.PogueEngineering.com

GRADING PLAN
INDEPENDENT BANK
BLOCK A, LOT 1, MILLER ADDITION
J.K. RICE SURVEY, ABSTRACT NO. 767
CITY OF CELINA, TEXAS

SHEET NO. C3.01

PI NO: 1294-06-065
DWG NO: 1294-06-065-07A.DWG
P-200708-01

TWILLIAMS 02/22/2008 – 9:47AM
N:\JOBS\1200-1299\1294-06-065\DWG\1294-06-065-07A.DWG

© POGUE ENGINEERING & DEVELOPMENT COMPANY, INC. 2007, ALL RIGHTS RESERVED THE ENGINEERING DESIGN, DETAIL AND ENGINEERING DRAWINGS FOR THIS PROJECT AND/OR OVERALL PROJECT ARE THE LEGAL PROPERTY OF POGUE ENGINEERING & DEVELOPMENT COMPANY, INC. THEIR USE FOR REPRODUCTION, CONSTRUCTION, OR DISTRIBUTION IS PROHIBITED UNLESS AUTHORIZED IN WRITING BY POGUE ENGINEERING & DEVELOPMENT COMPANY, INC.

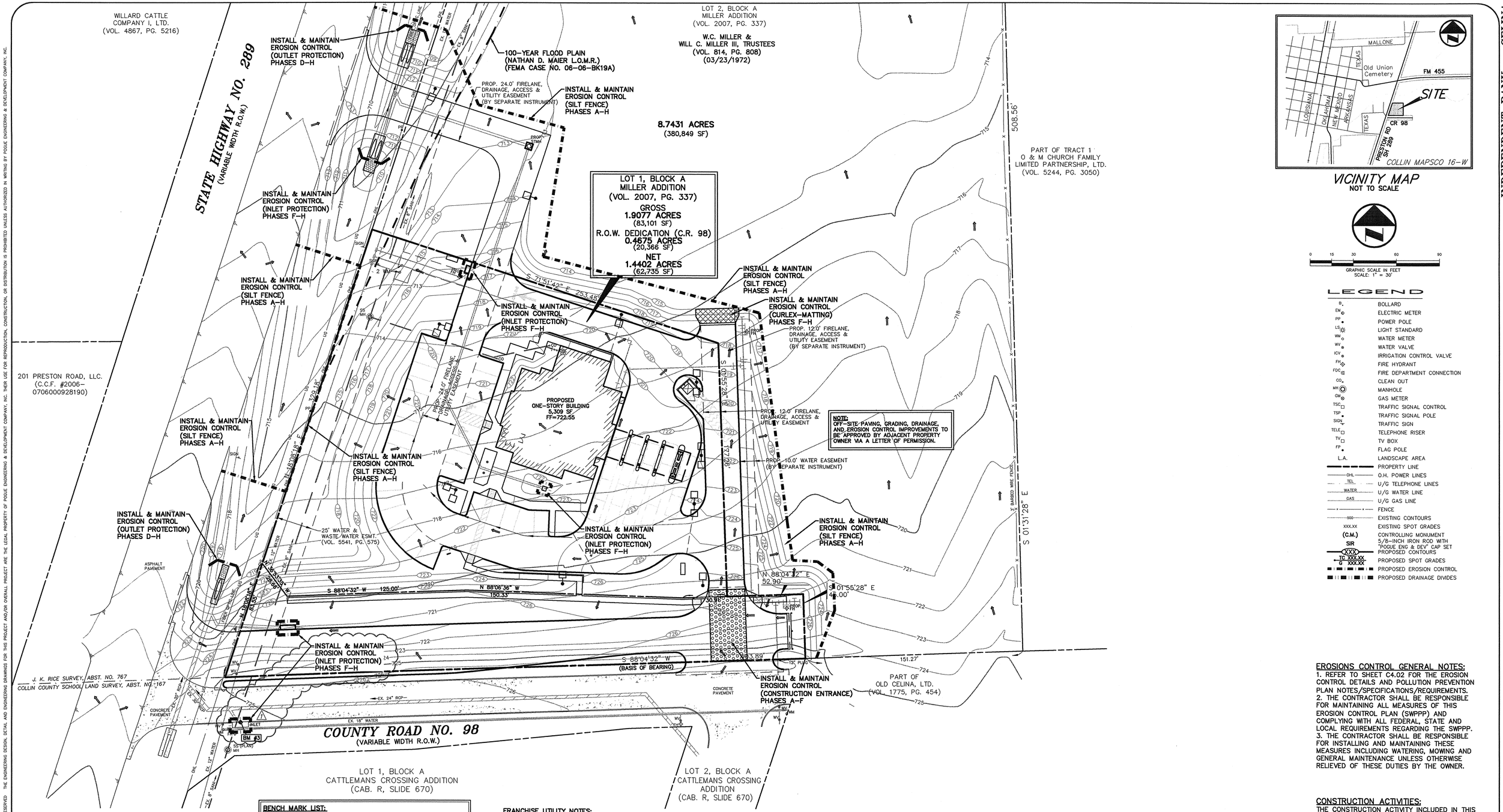

VICINITY MAP
NOT TO SCALE

GRAPHIC SCALE IN FEET
SCALE: 1" = 30'

LEGEND

B	BOLLARD
EM	ELECTRIC METER
PP	POWER POLE
LS	LIGHT STANDARD
WM	WATER METER
WV	WATER VALVE
ICV	IRRIGATION CONTROL VALVE
FH	FIRE HYDRANT
FDC	FIRE DEPARTMENT CONNECTION
CO	CLEAN OUT
MH	MANHOLE
GM	GAS METER
TSC	TRAFFIC SIGNAL CONTROL
TSP	TRAFFIC SIGNAL POLE
SIGN	TRAFFIC SIGN
TELE	TELEPHONE RISER
TV	TV BOX
FP	FLAG POLE
L.A.	LANDSCAPE AREA
	PROPERTY LINE
O/HL	O.H. POWER LINES
TEL	U/G TELEPHONE LINES
WATER	U/G WATER LINE
GAS	U/G GAS LINE
	FENCE
500	EXISTING CONTOURS
XXX.XX	EXISTING SPOT GRADES
(C.M.)	CONTROLLING MONUMENT
SIR	5/8-INCH IRON ROD WITH "POGUE ENG & DEV" CAP SET
XXX	PROPOSED CONTOURS
TC XXX.XX G XXX.XX	PROPOSED SPOT GRADES
	PROPOSED EROSION CONTROL
	PROPOSED DRAINAGE DIVIDES

EROSIONS CONTROL GENERAL NOTES:
1. REFER TO SHEET C4.02 FOR THE EROSION CONTROL DETAILS AND POLLUTION PREVENTION PLAN NOTES/SPECIFICATIONS/REQUIREMENTS.
2. THE CONTRACTOR SHALL BE RESPONSIBLE FOR MAINTAINING ALL MEASURES OF THIS EROSION CONTROL PLAN (SWPPP) AND COMPLYING WITH ALL FEDERAL, STATE AND LOCAL REQUIREMENTS REGARDING THE SWPPP.
3. THE CONTRACTOR SHALL BE RESPONSIBLE FOR INSTALLING AND MAINTAINING THESE MEASURES INCLUDING WATERING, MOWING AND GENERAL MAINTENANCE UNLESS OTHERWISE RELIEVED OF THESE DUTIES BY THE OWNER.

CONSTRUCTION ACTIVITIES:
THE CONSTRUCTION ACTIVITY INCLUDED IN THIS PLAN WILL INCLUDE THE FOLLOWING CONSTRUCTION PHASES:
A. CLEARING AND GRUBBING
B. STOCK PILING
C. ROUGH GRADING
D. UTILITY INSTALLATION/EXCAVATION OF TRENCHES
E. FINAL OR FINISH GRADING
F. PAVEMENT INSTALLATION
G. BUILDING CONSTRUCTION
H. PREPARATION OF SEEDING AND PLANTING

CAUTION!!!
UNDERGROUND UTILITIES ARE LOCATED IN THIS AREA. 48 HOURS PRIOR TO ANY CONSTRUCTION ACTIVITIES, CONTACT LINE LOCATES FOR FRANCHISE UTILITY INFO. CALL BEFORE YOU DIG:
TEXAS EXCAVATION SAFETY SYSTEM (TESS) 1-800-344-8377
TEXAS ONE CALL SYSTEMS 1-800-245-4545
LONE STAR NOTIFICATION CENTER 1-800-669-8344 EXT. 5
BEFORE YOU DIG...

BENCH MARK LIST:
BENCHMARK #1 (RM1 PER FEMA MAP)
SQUARE CUT ON NORTH END OF WEST HEADWALL OF CULVERT ON STATE ROUTE 289, 350± FEET SOUTH OF INTERSECTION WITH FM 455
ELEVATION = 702.97

BENCHMARK #2
"+" CUT ON TOP OF CONCRETE HEADWALL LOCATED AT SOUTHEAST CORNER OF THE INTERSECTION OF PRESTON ROAD AND FM 455
ELEVATION = 714.27

BENCHMARK #3
SQUARE CUT ON TOP OF CURB CENTERLINE OF STORM SEWER INLET LOCATED AT SOUTH SIDE OF C.R. 98 100'± EAST FROM CENTERLINE OF S.H. 289
ELEVATION = 725.24

FRANCHISE UTILITY NOTES:
1. TXU ELECTRIC DELIVER - MR. ALLAN BAXTER - (972) 569-6309
2. AT&T - MR. STEVE TURPIE - (972) 569-4756

RECORD DRAWINGS:
IT WAS THE INTENT THAT THE IMPROVEMENTS SHOWN BE CONSTRUCTED ACCORDING TO THESE PLANS AS APPROVED BY THE CITY. THE LINES AND GRADES WERE SET ON THE GROUND FOR CONSTRUCTION ACCORDING TO SAID PLANS. THE CITY INSPECTED THE CONSTRUCTION. THE ENGINEER DID NOT VERIFY LINES OR GRADES AFTER CONSTRUCTION. WE ARE NOT AWARE OF ANY CHANGES OR REVISIONS TO THESE PLANS DURING CONSTRUCTION OTHER THAN THOSE SHOWN.

RANDALL P. POGUE, P.E. TX LIC. NO. 84780 DATE: FEBRUARY 22, 2008

NO.	DATE	REVISION / DESCRIPTION
2	02-22-08	RECORD DRAWINGS
1	10-16-07	TXDOT COMMENTS

DESIGN	DRAWN	DATE	SCALE	NOTES
RPP	BEC	08-24-07	AS SHOWN	-

ARCHITECT
JIM WILSON ARCHITECTS
217 WOOD STREET
McKINNEY, TEXAS 75069
MR. JIM WILSON
(972) 562-9903 PHONE
(972) 547-4111 FAX

PROJECT INFORMATION
INDEPENDENT BANK
BLOCK A, LOT 1, MILLER ADDITION
CELINA, COLLIN COUNTY, TEXAS
J.K. RICE SURVEY, ABSTRACT NO. 767
PROPOSED USE: BANK
ZONING: PRO (PRESTON ROAD OVERLAY)

THE SEAL APPEARING ON THIS DOCUMENT WAS AUTHORIZED BY RANDALL P. POGUE, P.E. 84780 ON 08/24/07. ALTERATION OF A SEALED DOCUMENT WITHOUT PROPER NOTIFICATION TO THE RESPONSIBLE ENGINEER IS AN OFFENSE UNDER THE TEXAS ENGINEERING PRACTICE ACT.

STATE OF TEXAS · RANDALL P. POGUE · 84780 · LICENSED · PROFESSIONAL ENGINEER

POGUE ENGINEERING & DEVELOPMENT COMPANY, INC.
1515 HERITAGE DRIVE
SUITE 105
McKINNEY, TEXAS 75069
(214) 544-8880 PHONE
(214) 544-8882 FAX
www.PogueEngineering.com

EROSION CONTROL SITE PLAN (SWPPP)

INDEPENDENT BANK
BLOCK A, LOT 1, MILLER ADDITION
J.K. RICE SURVEY, ABSTRACT NO. 767
CITY OF CELINA, TEXAS

SHEET NO. C4.01

P/ NO: 1294-06-065

DWG NO: 1294-06-065-07A.DWG

P-200708-01

INDEPENDENT BANK - CELINA

PROPERTY OF POGUE ENGINEERING & DEVELOPMENT COMPANY, INC. THEIR USE FOR REPRODUCTION, CONSTRUCTION, OR DISTRIBUTION IS PROHIBITED UNLESS AUTHORIZED IN WRITING BY POGUE ENGINEERING & DEVELOPMENT COMPANY, INC.
© POGUE ENGINEERING & DEVELOPMENT COMPANY, INC. 2007. ALL RIGHTS RESERVED THE ENGINEERING DESIGN, DETAIL AND ENGINEERING DRAWINGS FOR THIS PROJECT AND/OR OVERALL PROJECT ARE THE LEGAL PROPERTY OF POGUE ENGINEERING & DEVELOPMENT COMPANY, INC.

TWILLIAMS 02/22/2008 - 9:47AM
N:\JOBS\1200-1299\1294-06-065\DWG\1294-06-065-07A.DWG

© POGUE ENGINEERING & DEVELOPMENT COMPANY, INC. 2007, ALL RIGHTS RESERVED THE ENGINEERING DESIGN, DETAIL AND ENGINEERING DRAWINGS FOR THIS PROJECT AND/OR OVERALL PROJECT ARE THE LEGAL PROPERTY OF POGUE ENGINEERING & DEVELOPMENT COMPANY, INC. THEIR USE FOR REPRODUCTION, CONSTRUCTION, OR DISTRIBUTION IS PROHIBITED UNLESS AUTHORIZED IN WRITING BY POGUE ENGINEERING & DEVELOPMENT COMPANY, INC.

TWILLIAMS 02/22/2008 – 9:47AM
N:\JOBS\1200-1299\1294-06-065\DWG\1294-06-065-07A.DWG

SILT FENCE GENERAL NOTES:

1. STEEL POSTS WHICH SUPPORT THE SILT FENCE SHALL BE INSTALLED ON A SLIGHT ANGLE TOWARD THE ANTICIPATED RUNOFF SOURCE. POST MUST BE EMBEDDED A MINIMUM OF ONE FOOT.
2. THE TOE OF THE SILT FENCE SHALL BE TRENCHED IN WITH A SPADE OR MECHANICAL TRENCHER, SO THAT THE DOWN SLOPE FACE OF THE TRENCH IS FLAT AND PERPENDICULAR TO THE LINE OF FLOW. WHERE FENCE CANNOT BE TRENCHED IN (E.G. PAVEMENT), WEIGHT FABRIC FLAP WITH ROCK ON UPHILL SIDE TO PREVENT FLOW FROM SEEPING UNDER FENCE.
3. THE TRENCH MUST BE A MINIMUM OF 6 INCHES DEEP AND 6 INCHES WIDE TO ALLOW FOR THE SILT FENCE FABRIC TO BE LAID IN THE GROUND AND BACK FILLED WITH COMPACTED MATERIAL.
4. SILT FENCE SHOULD BE SECURELY FASTENED TO EACH STEEL SUPPORT POST OR TO WOVEN WIRE, WHICH IN TURN IS ATTACHED TO THE STEEL FENCE POST. THERE SHALL BE A 3 FOOT OVERLAP, SECURELY FASTENED WHERE ENDS OF FABRIC MEET.
5. INSPECTION SHALL BE MADE EVERY TWO WEEKS AND AFTER EACH 1/2" RAINFALL. REPAIR OR REPLACEMENT SHALL BE MADE PROMPTLY AS NEEDED.
6. SILT FENCE SHALL BE REMOVED WHEN THE SITE IS COMPLETELY STABILIZED SO AS NOT TO BLOCK OR IMPEDE STORM FLOW OR DRAINAGE.
7. ACCUMULATED SILT SHALL BE REMOVED WHEN IT REACHES A DEPTH OF HALF THE HEIGHT OF THE FENCE. THE SILT SHALL BE DISPOSED OF AT AN APPROVED SITE AND IN SUCH A MANNER AS TO NOT CONTRIBUTE TO ADDITIONAL SILTATION.

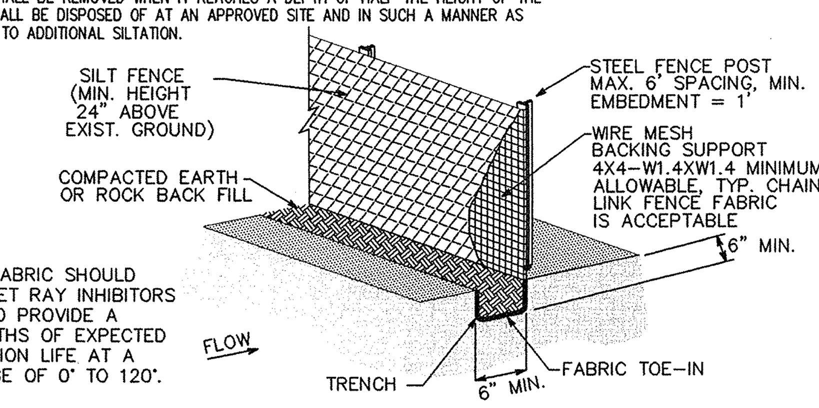

NOTE:
SYNTHETIC FILTER FABRIC SHOULD CONTAIN ULTRAVIOLET RAY INHIBITORS AND STABILIZERS TO PROVIDE A MINIMUM OF 6 MONTHS OF EXPECTED USABLE CONSTRUCTION LIFE AT A TEMPERATURE RANGE OF 0° TO 120°.

01 C4.02 SILT FENCE
NOT TO SCALE

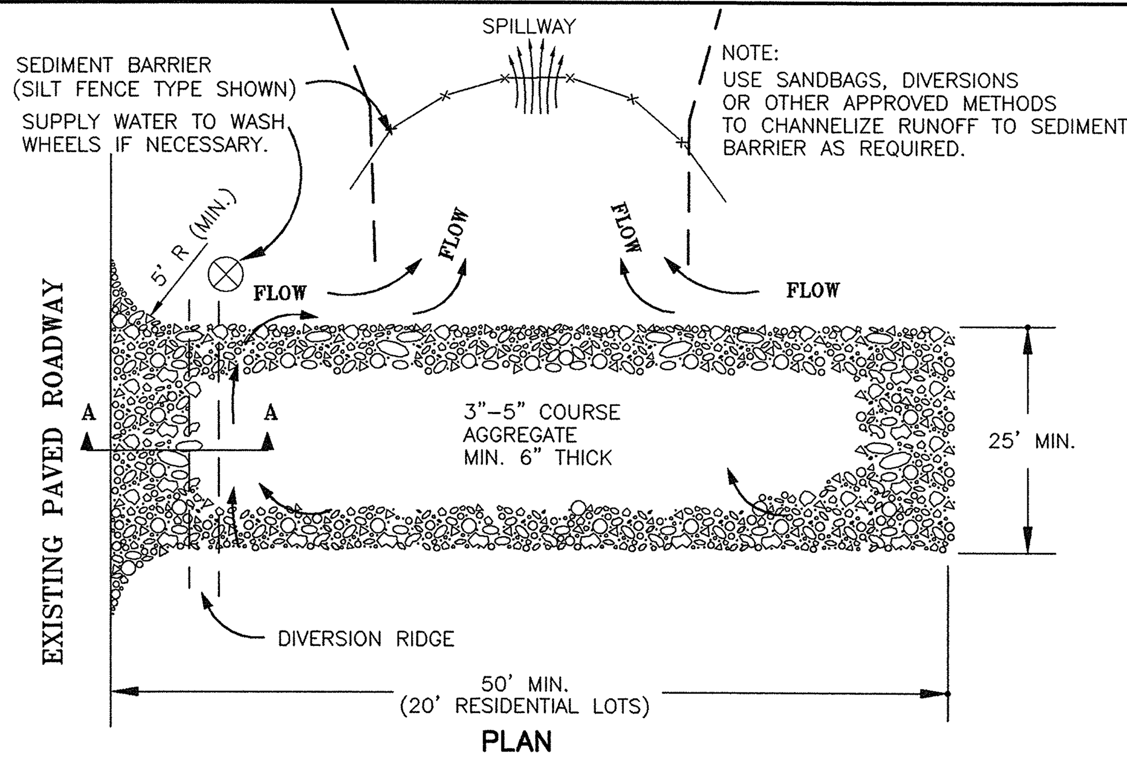

02 C4.02 CONSTRUCTION ENTRANCE
NOT TO SCALE

STABILIZED CONSTRUCTION ENTRANCE GENERAL NOTES:

1. STONE SHALL BE 3 TO 5 INCH DIAMETER CRUSHED ROCK OR ACCEPTABLE CRUSHED PORTLAND CEMENT CONCRETE.
2. LENGTH SHALL BE SHOWN ON PLANS, WITH A MINIMUM LENGTH OF 30 FEET FOR LOTS WHICH ARE LESS THAN 150 FEET FROM EDGE OF PAVEMENT. THE MINIMUM DEPTH IN ALL OTHER CASES SHALL BE 50 FEET.
3. THE THICKNESS SHALL NOT BE LESS THAN 6 INCHES.
4. THE WIDTH SHALL BE NO LESS THAN THE FULL WIDTH OF ALL POINTS OF INGRESS OR EGRESS.
5. WHEN NECESSARY, VEHICLES SHALL BE CLEANED TO REMOVE SEDIMENT PRIOR TO ENTRANCE ONTO A PUBLIC ROADWAY. WHEN WASHING IS REQUIRED, IT SHALL BE DONE ON AN AREA STABILIZED WITH CRUSHED STONE WITH DRAINAGE FLOWING AWAY FROM BOTH THE STREET AND AND THE STABILIZED ENTRANCE. ALL SEDIMENT SHALL BE PREVENTED FROM ENTERING ANY STORM DRAIN, DITCH OR WATERCOURSE USING APPROVED METHODS.
6. THE ENTRANCE SHALL BE MAINTAINED IN A CONDITION WHICH WILL PREVENT TRACKING OR FLOWING OF SEDIMENT ONTO PAVED SURFACES. THIS MAY REQUIRE PERIODIC TOP DRESSING WITH ADDITIONAL STONE AS CONDITIONS DEMAND. ALL SEDIMENT SPILLED, DROPPED, WASHED, OR TRACKED ONTO PAVED SURFACES MUST BE REMOVED IMMEDIATELY.
7. THE ENTRANCE MUST BE PROPERLY GRADED OR INCORPORATE A DRAINAGE SWALE TO PREVENT RUNOFF FROM LEAVING THE CONSTRUCTION SITE.

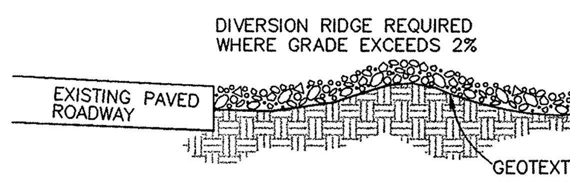

SECTION A – A

GRAB TENSILE STRENGTH=220 lbs (ASTM D1682)
ELONGATION FAILURE=60% (ASTM D1682)
MULLEN BURST STRENGTH=430 lbs (ASTM D3768)
PUNCTURE STRENGTH=125 lbs (ASTM D751 MODIFIED)
EQUIVALENT OPENING=SIZE 40–80 (US STD SIEVE)(CW–02215)

SOLID WASTE MANAGEMENT

DESCRIPTION
LARGE VOLUMES OF SOLID WASTE ARE OFTEN GENERATED AT CONSTRUCTION SITES INCLUDING: PACKAGING, PALLETS, WOOD WASTE, CONCRETE WASTE, SOIL, ELECTRICAL WIRING, CUTTINGS, AND A VARIETY OF OTHER MATERIALS. THE SOLID WASTE MANAGEMENT PRACTICE LISTS TECHNIQUES TO MINIMIZE THE POTENTIAL OF STORM WATER CONTAMINATION FROM SOLID WASTE THROUGH APPROPRIATE STORAGE AND DISPOSAL PRACTICES.

PRIMARY USE
THESE PRACTICES SHOULD BE A PART OF ALL CONSTRUCTION PRACTICES. BY LIMITING THE TRASH AND DEBRIS ON SITE, STORM WATER QUALITY IS IMPROVED ALONG WITH REDUCED CLEAN UP REQUIREMENTS AT THE COMPLETION OF THE PROJECT.

APPLICATIONS
THE SOLID WASTE MANAGEMENT PRACTICE FOR CONSTRUCTION SITES IS BASED ON PROPER STORAGE AND DISPOSAL PRACTICES BY CONSTRUCTION WORKERS AND SUPERVISORS.. KEY ELEMENTS OF THE PROGRAM ARE EDUCATION AND MODIFICATION OF IMPROPER DISPOSAL HABITS.. COOPERATION AND VIGILANCE IS REQUIRED ON THE PART OF SUPERVISORS AND WORKERS TO ENSURE THAT THE RECOMMENDATIONS AND PROCEDURES ARE FOLLOWED. FOLLOWING ARE LISTS DESCRIBING THE TARGETED MATERIALS AND RECOMMENDED PROCEDURES:

- TARGETED SOLID WASTE MATERIALS
  - PAPER AND CARDBOARD CONTAINERS
  - PLASTIC PACKAGING
  - STYROFOAM PACKING AND FORMS
  - INSULATION MATERIALS (NON–HAZARDOUS)
  - WOOD PALLETS
  - WOOD CUTTINGS
  - PIPE AND ELECTRICAL CUTTINGS
  - CONCRETE, BRICK, AND MORTAR WASTE
  - SHINGLE CUTTINGS AND WASTE
  - ROOFING TAR
  - STEEL (CUTTINGS, NAILS, RUST RESIDUE)
  - GYPSUM BOARD CUTTINGS AND WASTE
  - SHEATHING CUTTINGS AND WASTE
  - MISCELLANEOUS CUTTINGS AND WASTE
  - FOOD WASTE
  - DEMOLITION WASTE

STORAGE PROCEDURES
- WHEREVER POSSIBLE, MINIMIZE PRODUCTION OF SOLID WASTE MATERIALS.
- DESIGNATE A FOREMAN OR SUPERVISOR TO OVERSEE AND ENFORCE PROPER SOLID WASTE PROCEDURES.
- INSTRUCT CONSTRUCTION WORKERS IN PROPER SOLID WASTE PROCEDURES.
- SEGREGATE POTENTIALLY HAZARDOUS WASTE FROM NON–HAZARDOUS CONSTRUCTION SITE DEBRIS.
- KEEP SOLID WASTE MATERIALS UNDER COVER IN EITHER A CLOSED DUMPSTER OR OTHER ENCLOSED TRASH CONTAINER THAT LIMITS CONTACT WITH RAIN AND RUNOFF.
- STORE WASTE MATERIALS AWAY FROM DRAINAGE DITCHES, SWALES AND CATCH BASINS.
- DO NOT ALLOW TRASH CONTAINERS TO OVERFLOW.
- DO NOT ALLOW WASTE MATERIALS TO ACCUMULATE ON THE GROUND.
- PROHIBIT LITTERING BY WORKERS AND VISITORS.
- POLICE AREA DAILY FOR LITTER AND DEBRIS.
- ENFORCE SOLID WASTE HANDLING AND STORAGE PROCEDURES.

DISPOSAL PROCEDURES
- IF FEASIBLE, SEGREGATE RECYCLABLE WASTES FROM NON–RECYCLABLE WASTE MATERIALS AND DISPOSE OF PROPERLY.
- GENERAL CONSTRUCTION DEBRIS MAY BE HAULED TO A LICENSED CONSTRUCTION DEBRIS LANDFILL (TYPICALLY LESS EXPENSIVE THAN A SANITARY LANDFILL).
- USE WASTE FACILITIES APPROVED BY LOCAL JURISDICTION.
- RUNOFF WHICH COMES INTO CONTACT WITH UNPROTECTED WASTE SHALL BE DIRECTED INTO STRUCTURAL TREATMENT SUCH AS SILT FENCE TO REMOVE DEBRIS.

EDUCATION
- EDUCATE ALL WORKERS ON SOLID WASTE STORAGE AND DISPOSAL PROCEDURES.
- INSTRUCT WORKERS IN IDENTIFICATION OF SOLID WASTE AND HAZARDOUS WASTE.
- HAVE REGULAR MEETINGS TO DISCUSS AND REINFORCE DISPOSAL PROCEDURES (INCORPORATE IN REGULAR SAFETY SEMINARS).
- CLEARLY MARK ON ALL SOLID WASTE CONTAINERS WHICH MATERIALS ARE ACCEPTABLE.

QUALITY CONTROL
- FOREMAN AND/OR CONSTRUCTION SUPERVISOR SHALL MONITOR ON–SITE SOLID WASTE STORAGE AND DISPOSAL PROCEDURES.
- DISCIPLINE WORKERS WHO REPEATEDLY VIOLATE PROCEDURES.

REQUIREMENTS
- JOB–SITE WASTE HANDLING AND DISPOSAL EDUCATION AND AWARENESS PROGRAM.
- COMMITMENT BY MANAGEMENT TO IMPLEMENT AND ENFORCE SOLID WASTE MANAGEMENT PROGRAM.
- COMPLIANCE BY WORKERS.
- SUFFICIENT AND APPROPRIATE WASTE STORAGE CONTAINERS.
- TIMELY REMOVAL OF STORED SOLID WASTE MATERIALS.
- POSSIBLE MODEST COST IMPACT FOR ADDITIONAL WASTE STORAGE CONTAINERS.
- MINIMAL OVERALL COST IMPACT.

LIMITATIONS
ONLY ADDRESSES NON–HAZARDOUS SOLID WASTE.
ONE PART OF A COMPREHENSIVE CONSTRUCTION SITE MANAGEMENT PROGRAM.

APPLICATIONS
PERIMETER CONTROL
SLOPE PROTECTION
SEDIMENT TRAPPING
CHANNEL PROTECTION
TEMPORARY STABILIZATION
PERMANENT STABILIZATION
[Waste Management]
[Housekeeping Practices]

TARGETED CONSTITUENTS
○ SEDIMENT
● NUTRIENTS TOXIC MATERIALS
○ OIL & GREASE
● FLOATABLE MATERIALS
● OTHER CONSTRUCTION WASTES

IMPLEMENTATION REQUIREMENTS
◒ CAPITAL COSTS
◒ MAINTENANCE
◒ TRAINING
○ SUITABILITY FOR SLOPES > 5%

LEGEND
● SIGNIFICANT IMPACT
◒ MEDIUM IMPACT
○ LOW IMPACT
? UNKNOWN OR QUESTIONABLE IMPACT

W–1

CONCRETE WASTE MANAGEMENT

DESCRIPTION
CONCRETE WASTE AT CONSTRUCTION SITES COMES IN TWO FORMS; 1)EXCESS FRESH CONCRETE MIX INCLUDING TRUCK AND EQUIPMENT WASHING, AND 2) CONCRETE DUST AND CONCRETE DEBRIS RESULTING FROM DEMOLITION. BOTH FORMS HAVE THE POTENTIAL TO IMPACT WATER QUALITY THROUGH STORM WATER RUNOFF CONTACT WITH THE WASTE.

PRIMARY USE
CONCRETE WASTE IS PRESENT AT MOST CONSTRUCTION SITES. THIS BMP SHOULD BE UTILIZED AT SITES IN WHICH CONCRETE WASTE IS PRESENT.

APPLICATIONS
A NUMBER OF WATER QUALITY PARAMETERS CAN BE AFFECTED BY INTRODUCTION OF CONCRETE – ESPECIALLY FRESH CONCRETE. CONCRETE AFFECTS THE PH OF RUNOFF, CAUSING SIGNIFICANT CHEMICAL CHANGES IN WATER BODIES AND HARMING AQUATIC LIFE. SUSPENDED SOLIDS IN THE FORM OF BOTH CEMENT AND AGGREGATE DUST ARE ALSO GENERATED FROM BOTH FRESH AND DEMOLISHED CONCRETE WASTE.

CURRENT UNACCEPTABLE WASTE CONCRETE DISPOSAL PRACTICES
- DUMPING IN VACANT AREAS ON THE JOB–SITE.
- ILLICIT DUMPING OFF–SITE.
- DUMPING INTO DITCHES OR DRAINAGE FACILITIES.

RECOMMENDED DISPOSAL PRACTICES
- AVOID UNACCEPTABLE DISPOSAL PRACTICES LISTED ABOVE.
- DEVELOP PREDETERMINED, SAFE CONCRETE DISPOSAL AREAS.
- PROVIDE A WASHOUT AREA WITH A MINIMUM OF 6 CUBIC FEET OF CONTAINMENT AREA VOLUME FOR EVERY 10 CUBIC YARDS OF CONCRETE POURED.
- NEVER DUMP WASTE CONCRETE ILLICITLY OR WITHOUT PROPERTY OWNERS KNOWLEDGE AND CONSENT.
- TREAT RUNOFF FROM STORAGE AREAS THROUGH THE USE OF STRUCTURAL CONTROLS AS REQUIRED.

EDUCATION
- DRIVERS AND EQUIPMENT OPERATORS SHOULD BE INSTRUCTED ON PROPER DISPOSAL AND EQUIPMENT WASHING PRACTICES (SEE ABOVE).
- SUPERVISORS MUST BE MADE AWARE OF THE POTENTIAL ENVIRONMENTAL CONSEQUENCES OF IMPROPERLY HANDLED CONCRETE WASTE.

ENFORCEMENT
- THE CONSTRUCTION SITE MANAGER OR FOREMAN MUST ENSURE THAT EMPLOYEES AND PREMIX COMPANIES FOLLOW PROPER PROCEDURES FOR CONCRETE DISPOSAL AND EQUIPMENT WASHING.
- EMPLOYEES VIOLATING DISPOSAL OR EQUIPMENT CLEANING DIRECTIVES MUST BE REEDUCATED OR DISCIPLINED IF NECESSARY.

DEMOLITION PRACTICES
- MONITOR WEATHER AND WIND DIRECTION TO ENSURE CONCRETE DUST IS NOT ENTERING DRAINAGE STRUCTURES AND SURFACE WATERS.
- WHERE APPROPRIATE, CONSTRUCT SEDIMENT TRAPS OR OTHER TYPES OF SEDIMENT DETENTION DEVICES DOWNSTREAM OF DEMOLITION ACTIVITIES.

REQUIREMENTS
- USE PREDETERMINED DISPOSAL SITES FOR WASTE CONCRETE.
- PROHIBIT DUMPING WASTE CONCRETE ANYWHERE BUT PREDETERMINED AREAS.
- ASSIGN PREDETERMINED TRUCK AND EQUIPMENT WASHING AREAS
- EDUCATE DRIVERS AND OPERATORS ON PROPER DISPOSAL AND EQUIPMENT CLEANING PROCEDURES.

EDUCATION
- MINIMAL COST IMPACT FOR TRAINING AND MONITORING.
- CONCRETE DISPOSAL COST DEPENDS ON AVAILABILITY AND DISTANCE TO SUITABLE DISPOSAL AREAS.
- ADDITIONAL COSTS INVOLVED IN EQUIPMENT WASHING COULD BE SIGNIFICANT.

LIMITATIONS
THIS CONCRETE WASTE MANAGEMENT PROGRAM IS ONE PART OF A COMPREHENSIVE CONSTRUCTION SITE WASTE MANAGEMENT PROGRAM.

APPLICATIONS
PERIMETER CONTROL
SLOPE PROTECTION
SEDIMENT TRAPPING
CHANNEL PROTECTION
TEMPORARY STABILIZATION
PERMANENT STABILIZATION
[Waste Management]
[Housekeeping Practices]

TARGETED CONSTITUENTS
○ SEDIMENT
● NUTRIENTS TOXIC MATERIALS
○ OIL & GREASE
● FLOATABLE MATERIALS
● OTHER CONSTRUCTION WASTES

IMPLEMENTATION REQUIREMENTS
◒ CAPITAL COSTS
◒ MAINTENANCE
◒ TRAINING
○ SUITABILITY FOR SLOPES > 5%

LEGEND
● SIGNIFICANT IMPACT
◒ MEDIUM IMPACT
○ LOW IMPACT
? UNKNOWN OR QUESTIONABLE IMPACT

W–3

POLLUTION CONTROL GENERAL NOTES:

1. THIS PLAN HAS BEEN PREPARED TO PROVIDE MEANS TO PREVENT OR MINIMIZE POLLUTION OF STORM WATER.
2. THIS PROJECT CONSISTS OF THE DEVELOPMENT OF 1 LOT(S) ON A 1.91 ACRE TRACT FOR A COMMERCIAL USE.
3. THE CONSTRUCTION ACTIVITY INCLUDED IN THIS PLAN WILL INCLUDE:
   A. CLEARING AND GRUBBING
   B. STOCK PILING
   C. ROUGH GRADING
   D. UTILITY INSTALLATION/EXCAVATION OF TRENCHES
   E. FINAL OR FINISH GRADING
   F. PAVEMENT INSTALLATION
   G. BUILDING CONSTRUCTION
   H. PREPARATION OF SEEDING OR PLANTING
   (A.–H.: CONSTRUCTION PHASES)
4. BEST MANAGEMENT PRACTICES (STRUCTURAL PRACTICES) USED ON THIS PROJECT COULD INCLUDE: SILT FENCING, CONSTRUCTION ENTRANCE, INLET PROTECTION, OUTLET PROTECTION, SUBSURFACE DRAINS, CHECK DAMS, DRAINAGE SWALES, SEDIMENT TRAPS, EARTH DIKE, PIPE SLOPE DRAINS, EROSION CONTROL MATTING, DETENTION/RETENTION PONDS AND SEDIMENT BASINS.
5. THE TOTAL ESTIMATED SITE AREA IS 1.91 ACRES
   THE TOTAL ESTIMATED SITE AREA TO BE DISTURBED IS 1.91 ACRES
   THE TOTAL ESTIMATED SITE AREA NOT TO BE DISTURBED IS 0.00 ACRES
6. THE ESTIMATED RUNOFF COEFFICIENT PRIOR TO DEVELOPMENT OF THE PROJECT IS 0.30
7. THE ESTIMATED RUNOFF COEFFICIENT UPON COMPLETION OF THE PROJECT IS 0.90
8. THE SLOPES EXPECTED ON THE SITE UPON COMPLETION OF FINAL GRADING WILL RANGE BETWEEN 1% TO 30%
9. THE STORM WATER EXITING THE SITE IS COLLECTED IN AN EXISTING DRAINAGE SYSTEM MAINTAINED BY THE CITY OF CELINA, TEXAS.
10. THE NAME OF THE RECEIVING WATER BODY IS DOE BRANCH, LOCATED APPROXIMATELY 400 FEET FROM THE SUBJECT PROPERTY.
11. THE SOILS PRESENT AT THE SITE ARE GENERALLY EXPANSIVE CLAYS.
12. THE CONTRACTOR SHALL PROVIDE EROSION PROTECTION AROUND THE WORK AREA PERIMETER AND AT ALL INLET MOUTHS DURING CONSTRUCTION.
13. THE CONTRACTOR WILL REMOVE ALL EXCESS SOIL FROM CONSTRUCTION VEHICLES PRIOR TO EXITING THE SITE.
14. ALL DISTURBED AREAS WHICH WILL NOT BE RE–DISTURBED FOR A MINIMUM OF 14 DAYS MUST BE STABILIZED BY THE CONTRACTOR TO CONTROL EROSION.
15. THE CONTRACTOR SHALL UNDERTAKE PROPER METHODS TO REDUCE DUST GENERATION FROM THE SITE.
16. THE CONTRACTOR MUST COMPLY WITH FEDERAL, STATE AND LOCAL REGULATIONS REGARDING SEDIMENT AND EROSION CONTROL.
17. A COPY OF THE STORM WATER POLLUTION PREVENTION PLAN ALONG WITH THE EPA (NPDES) PERMIT MUST BE POSTED AT THE CONSTRUCTION SITE THROUGHOUT THE CONSTRUCTION OF THE PROJECT. IF THE PERMIT HAS NOT BEEN ISSUED, A COPY OF NOTICE OF INTENT (NOI) SHALL BE POSTED
18. CONTRACTOR SHALL BE RESPONSIBLE FOR SUBMITTAL OF THE EPA's REQUIREMENT OF A NOTICE OF INTENT (NOI) AND THE NOTICE OF TERMINATION (NOT) AND ANY ADDITIONAL REQUIREMENT PER THE EPA GUIDELINES FOR STORM WATER POLLUTION PREVENTION.
19. ALL EROSION CONTROL DEVICES ARE TO BE INSTALLED IN ACCORDANCE WITH THE APPROVED PLANS AND SPECIFICATIONS FOR THIS PROJECT. CHANGES ARE TO BE APPROVED BEFORE CONSTRUCTION BY THE DESIGN ENGINEER AND THE CITY.
20. IF OFF–SITE SOIL BORROW OR SPOIL SITES ARE USED IN CONJUNCTION WITH THIS PROJECT, THE CONTRACTOR SHALL NOTIFY THE CITY INSPECTOR AND BE RESPONSIBLE FOR EROSION CONTROL REQUIREMENTS AS PER FEDERAL, STATE AND LOCAL REQUIREMENTS.
21. INSPECTIONS SHALL BE MADE WEEKLY AND AFTER RAIN STORM EVENTS TO INSURE THAT THE DEVICES ARE FUNCTIONING PROPERLY. WHEN SEDIMENT OR MUD HAS CLOGGED THE VOID SPACES BETWEEN STONES OR MUD IS BEING TRACKED ONTO A PUBLIC ROADWAY THE AGGREGATE PAD MUST BE WASHED DOWN OR REPLACED. RUNOFF FROM THE WASH DOWN OPERATION SHALL NOT BE ALLOWED TO DRAIN DIRECTLY OFF–SITE WITHOUT FIRST FLOWING THROUGH ANOTHER BEST MANAGEMENT PRACTICE (BMP) TO CONTROL OFF–SITE SEDIMENTATION. PERIODIC RE–GRADING OR THE ADDITION OF NEW STONE MAY BE REQUIRED TO MAINTAIN EFFICIENCY OF THE INSTALLATION.
22. MAINTENANCE AND INSPECTIONS PROCEDURES: CONTROL MEASURES SHALL BE INSPECTED AT LEAST ONCE A WEEK OR WITHIN 24 HOURS OF ANY STORM EVENT OF 0.5 INCHES OR GREATER. IF REPAIR IS NECESSARY IT SHALL BE DONE AT THE EARLIEST PRACTICAL DATE BUT IN NO CASE GREATER THAN 48 HOURS.
23. FINAL STABILIZATION IS DEFINED AS A UNIFORM PERENNIAL VEGETATIVE COVER AT A MINIMUM OF 70% RESTORATION OF THE NATIVE OR NATURAL PREEXISTING BACKGROUND COVER FOR THE AREA.
24. (△1) REMOVE BEST MANAGEMENT PRACTICES FROM TXDOT R.O.W. UPON FINAL STABILIZATION.
25. SEDIMENTATION PONDS/TRAPS MUST BE CLEANED OUT WHEN SEDIMENTATION ACCUMULATES TO A POINT OF 50% FULL (BY VOLUME).
26. CONTRACTOR SHALL SEED ALL DISTURBED AREAS IMMEDIATELY UPON COMPLETION OF FINAL GRADING.
27. NO PUBLIC ACCEPTANCE UNTIL (FINAL STABILIZATION) VEGETATION IS ESTABLISHED ON ALL DISTURBED AREAS.

SEQUENCE OF EROSION CONTROL BEST MANAGEMENT PRACTICES:

1. INSTALL DOWN SLOPE AND SIDE SLOPE PERIMETER CONTROLS PRIOR TO THE LAND DISTURBING ACTIVITIES.
2. DO NOT DISTURB AN AREA UNTIL IT IS NECESSARY FOR CONSTRUCTION TO PROCEED.
3. COVER AND STABILIZE DISTURBED AREAS AS SOON AS POSSIBLE (WITHIN A MAXIMUM OF 14 DAYS).
4. TIME ACTIVITIES TO LIMIT IMPACT FROM SEASONAL CLIMATE CHANGES OR WEATHER EVENTS.
5. DELAY CONSTRUCTION OF INFILTRATION MEASURES UNTIL THE END OF THE CONSTRUCTION PROJECT, WHEN UPSTREAM DRAINAGE AREAS HAVE BEEN STABILIZED.
6. DO NOT REMOVE TEMPORARY PERIMETER CONTROLS UNTIL AFTER ALL UPSTREAM AREAS ARE FINAL STABILIZED.

ALLOWABLE NON–STORM WATER DISCHARGES

- DISCHARGES FROM FIRE FIGHTING ACTIVITIES.
- FIRE HYDRANT FLUSHINGS. *
- WATER USED TO WASH VEHICLES OR CONTROL DUST.
- POTABLE WATER SOURCES (INCLUDING WATERLINE FLUSHINGS CONTAINING LESS THAN 1000 GALLONS). *
- UNCONTAMINATED GROUND WATER (INCLUDING DEWATERING GROUNDWATER INFILTRATION).
- FOUNDATION OR FOOTING DRAINS WHERE FLOWS ARE NOT CONTAMINATED WITH PROCESS MATERIALS SUCH AS SOLVENTS.
- SPRINGS, RIPARIAN HABITATS, WETLANDS AND UNCONTAMINATED GROUNDWATER.
- IRRIGATION WATER.
- EXTERIOR BUILDING WASH DOWN WITHOUT DETERGENTS.
- PAVEMENT WASH WATERS WHERE SPILLS OR LEAKS OF TOXIC OR HAZARDOUS MATERIALS HAVE NOT OCCURRED (UNLESS ALL SPILL MATERIAL HAS BEEN REMOVED) AND WHERE DETERGENTS ARE NOT USED.
- AIR CONDITIONING CONDENSATE.

* HEAVILY CHLORINATED WATER (3.5 MG/L OR GREATER FREE CHLORINE) RESULTING FROM WATER LINE STERILIZATION SHALL BE DIRECTED UNDER PERMIT TO THE SANITARY SEWER UNLESS OTHERWISE NOTED. THE CONTRACTOR SHALL APPLY TO THE ENGINEERING DEPARTMENT FOR A SANITARY SEWER DISCHARGE PERMIT AFTER THE MANDATORY CHLORINE RETENTION TIME (USUALLY 24 HOURS). THE HEAVILY CHLORINATED WATER MAY BE DISCHARGED TO THE SANITARY SEWER, BEGINNING TWO WORKING DAYS AFTER PERMIT APPLICATION.

SPILLS AND RELEASES: (OF REPORTABLE QUANTITIES) THE FOLLOWING STEPS SHALL BE TAKEN

1. NOTIFY THE NATIONAL RESPONSE CENTER (800) 424–8802 OR (202) 426–2675 AS SOON AS YOU HAVE KNOWLEDGE OF THE SPILL.
2. THE SWPPP MUST BE MODIFIED WITHIN 14 DAYS TO PROVIDE A DESCRIPTION OF THE RELEASE, THE CIRCUMSTANCES LEADING TO THE RELEASE AND THE DATE OF THE RELEASE.

03 C4.02 NOT USED
NOT TO SCALE

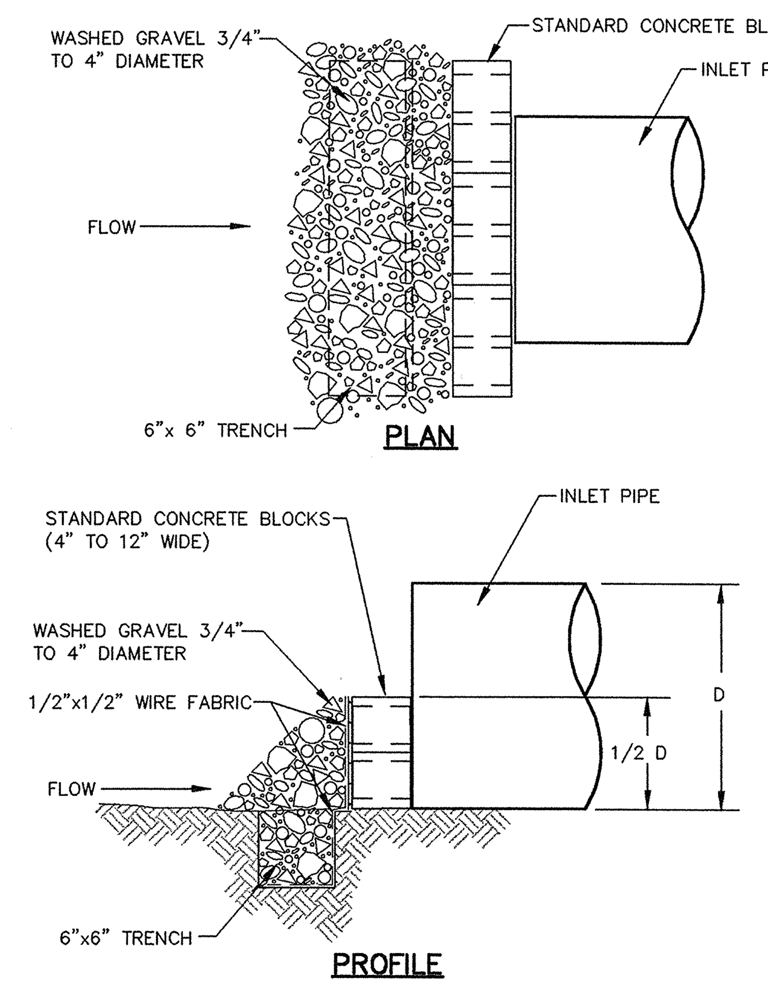

04 C4.02 PIPE INLET PROTECTION
NOT TO SCALE

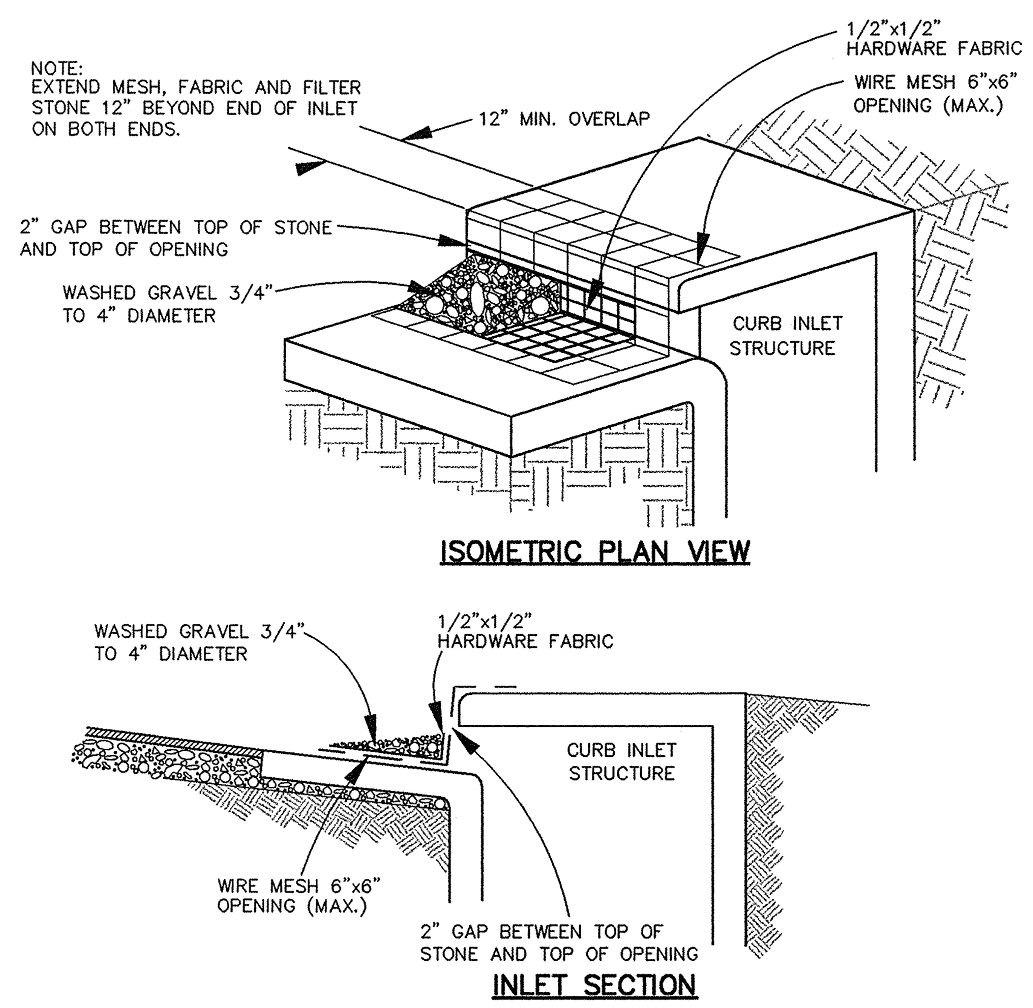

05 C4.02 CURB INLET PROTECTION
NOT TO SCALE

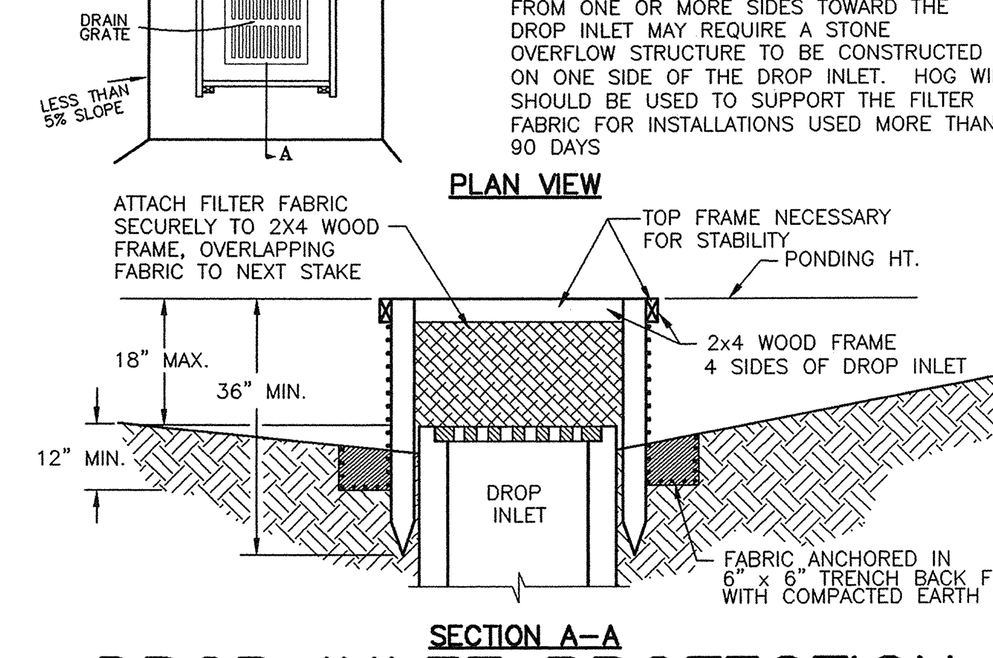

NOTE: CONCENTRATED DITCH FLOW COMING FROM ONE OR MORE SIDES TOWARD THE DROP INLET MAY REQUIRE A STONE OVERFLOW STRUCTURE TO BE CONSTRUCTED ON ONE SIDE OF THE DROP INLET. HOG WIRE SHOULD BE USED TO SUPPORT THE FILTER FABRIC FOR INSTALLATIONS USED MORE THAN 90 DAYS

06 C4.02 DROP INLET PROTECTION
NOT TO SCALE

△1 REMOVED ROCK OUTLET PROTECTION DETAIL. CONTRACTOR TO USE CAST–IN PLACE CONCRETE RIP–RAP IN LIEU OF ROCK RIP–RAP.

07 C4.02 NOT USED
NOT TO SCALE

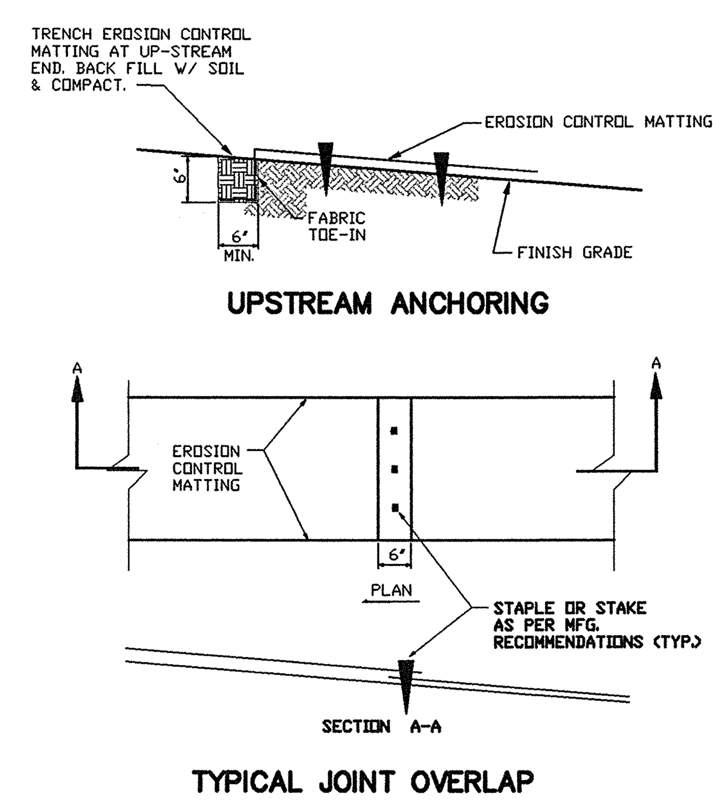

08 C4.02 EROSION CONTROL MATTING
NOT TO SCALE

RECORD DRAWINGS:
IT WAS THE INTENT THAT THE IMPROVEMENTS SHOWN BE CONSTRUCTED ACCORDING TO THESE PLANS AS APPROVED BY THE CITY. THE LINES AND GRADES WERE SET ON THE GROUND FOR CONSTRUCTION ACCORDING TO SAID PLANS. THE CITY INSPECTED THE CONSTRUCTION. THE ENGINEER DID NOT VERIFY LINES OR GRADES AFTER CONSTRUCTION. WE ARE NOT AWARE OF ANY CHANGES OR REVISIONS TO THESE PLANS DURING CONSTRUCTION OTHER THAN THOSE SHOWN.

RANDALL P. POGUE, P.E. DATE: FEBRUARY 22, 2008 △2
TX LIC. NO. 84780

NO.	DATE	REVISION / DESCRIPTION
2	02–22–08	RECORD DRAWINGS
1	10–16–07	TXDOT COMMENTS

DESIGN	DRAWN	DATE	SCALE	NOTES
RPP	BEC	08–24–07	AS SHOWN	–

ARCHITECT
JIM WILSON ARCHITECTS
217 WOOD STREET
McKINNEY, TEXAS 75069
MR. JIM WILSON
(972) 562–9903 PHONE
(972) 547–4111 FAX

PROJECT INFORMATION
INDEPENDENT BANK
BLOCK A, LOT 1, MILLER ADDITION
CELINA, COLLIN COUNTY, TEXAS
J.K. RICE SURVEY, ABSTRACT NO. 767
PROPOSED USE: BANK
ZONING: PRO (PRESTON ROAD OVERLAY)

THE SEAL APPEARING ON THIS DOCUMENT WAS AUTHORIZED BY RANDALL P. POGUE, P.E. 84780 ON 08/24/07. ALTERATION OF A SEALED DOCUMENT WITHOUT PROPER NOTIFICATION TO THE RESPONSIBLE ENGINEER IS AN OFFENSE UNDER THE TEXAS ENGINEERING PRACTICE ACT.

8-24-07

STATE OF TEXAS
RANDALL P. POGUE
84780
LICENSED
PROFESSIONAL ENGINEER

POGUE
ENGINEERING & DEVELOPMENT COMPANY, INC.
1515 HERITAGE DRIVE
SUITE 105
McKINNEY, TEXAS 75069
(214) 544–8880 PHONE
(214) 544–8882 FAX
www.PogueEngineering.com

EROSION CONTROL DETAILS (SWPPP)

INDEPENDENT BANK
BLOCK A, LOT 1, MILLER ADDITION
J.K. RICE SURVEY, ABSTRACT NO. 767
CITY OF CELINA, TEXAS

SHEET NO. C4.02

PI NO: 1294–06–065
DWG NO: 1294–06–065–07A.DWG
P-200708-01

© POGUE ENGINEERING & DEVELOPMENT COMPANY, INC. 2007, ALL RIGHTS RESERVED. THE ENGINEERING DESIGN, DETAIL AND ENGINEERING DRAWINGS FOR THIS PROJECT AND/OR OVERALL PROJECT ARE THE LEGAL PROPERTY OF POGUE ENGINEERING & DEVELOPMENT COMPANY, INC. THEIR USE FOR REPRODUCTION, CONSTRUCTION, OR DISTRIBUTION IS PROHIBITED UNLESS AUTHORIZED IN WRITING BY POGUE ENGINEERING & DEVELOPMENT COMPANY, INC.

TWILLIAMS 02/22/2008 - 9:49AM
N:\JOBS\1200-1299\1294-06-065\DWG\1294-06-065-07A.DWG

INDEPENDENT BANK – CELINA

SCALE
1"=20' H
1"=5' V

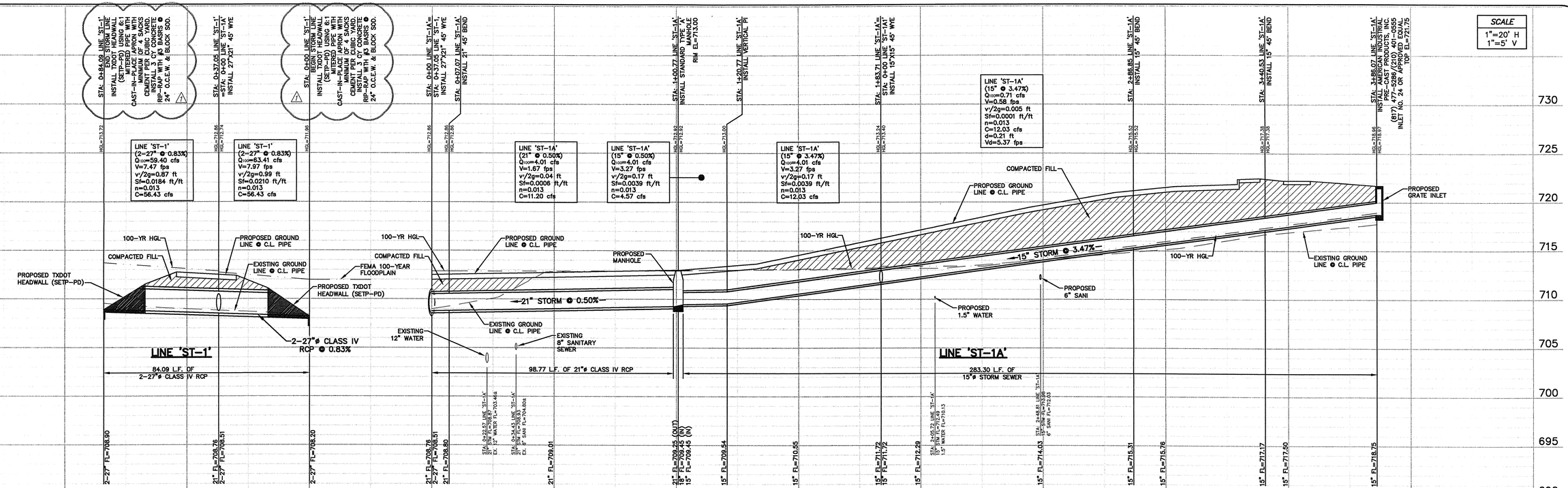

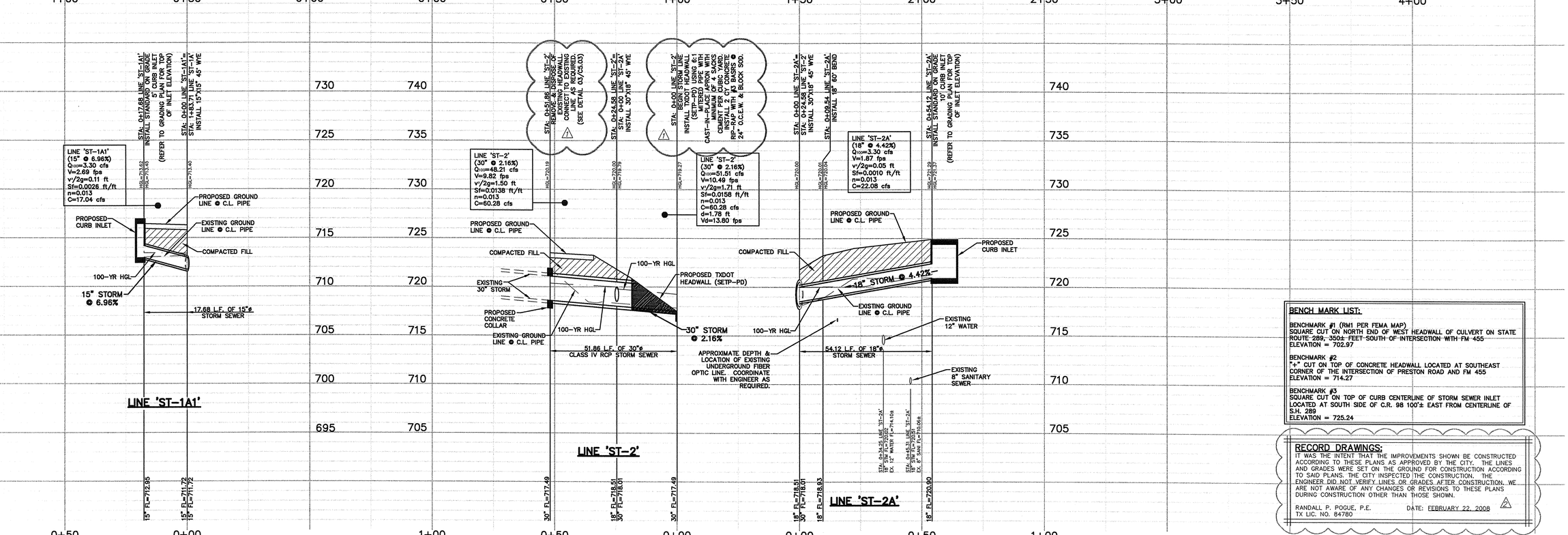

BENCH MARK LIST:

BENCHMARK #1 (RM1 PER FEMA MAP)
SQUARE CUT ON NORTH END OF WEST HEADWALL OF CULVERT ON STATE ROUTE 289, 350± FEET SOUTH OF INTERSECTION WITH FM 455
ELEVATION = 702.97

BENCHMARK #2
"+" CUT ON TOP OF CONCRETE HEADWALL LOCATED AT SOUTHEAST CORNER OF THE INTERSECTION OF PRESTON ROAD AND FM 455
ELEVATION = 714.27

BENCHMARK #3
SQUARE CUT ON TOP OF CURB CENTERLINE OF STORM SEWER INLET LOCATED AT SOUTH SIDE OF C.R. 98 100'± EAST FROM CENTERLINE OF S.H. 289
ELEVATION = 725.24

RECORD DRAWINGS:

IT WAS THE INTENT THAT THE IMPROVEMENTS SHOWN BE CONSTRUCTED ACCORDING TO THESE PLANS AS APPROVED BY THE CITY. THE LINES AND GRADES WERE SET ON THE GROUND FOR CONSTRUCTION ACCORDING TO SAID PLANS. THE CITY INSPECTED THE CONSTRUCTION. THE ENGINEER DID NOT VERIFY LINES OR GRADES AFTER CONSTRUCTION. WE ARE NOT AWARE OF ANY CHANGES OR REVISIONS TO THESE PLANS DURING CONSTRUCTION OTHER THAN THOSE SHOWN.

RANDALL P. POGUE, P.E.
TX LIC. NO. 84780

DATE: FEBRUARY 22, 2008

NO.	DATE	REVISION / DESCRIPTION
2	02-22-08	RECORD DRAWINGS
1	10-16-07	TXDOT COMMENTS

DESIGN	DRAWN	DATE	SCALE	NOTES
RPP	BEC	08-24-07	AS SHOWN	–

ARCHITECT
JIM WILSON ARCHITECTS
217 WOOD STREET
McKINNEY, TEXAS 75069
MR. JIM WILSON
(972) 562-9903 PHONE
(972) 547-4111 FAX

PROJECT INFORMATION
INDEPENDENT BANK
BLOCK A, LOT 1, MILLER ADDITION
CELINA, COLLIN COUNTY, TEXAS
J.K. RICE SURVEY, ABSTRACT NO. 767
PROPOSED USE: BANK
ZONING: PRO (PRESTON ROAD OVERLAY)

THE SEAL APPEARING ON THIS DOCUMENT WAS AUTHORIZED BY RANDALL P. POGUE, P.E. 84780 ON 08/24/07. ALTERATION OF A SEALED DOCUMENT WITHOUT PROPER NOTIFICATION TO THE RESPONSIBLE ENGINEER IS AN OFFENSE UNDER THE TEXAS ENGINEERING PRACTICE ACT.

8-24-07

STATE OF TEXAS · RANDALL P. POGUE · 84780 · LICENSED PROFESSIONAL ENGINEER

POGUE ENGINEERING & DEVELOPMENT COMPANY, INC.
1515 HERITAGE DRIVE
SUITE 105
McKINNEY, TEXAS 75069
(214) 544-8880 PHONE
(214) 544-8882 FAX
www.PogueEngineering.com

STORM SEWER PROFILES

INDEPENDENT BANK
BLOCK A, LOT 1, MILLER ADDITION
J.K. RICE SURVEY, ABSTRACT NO. 767
CITY OF CELINA, TEXAS

SHEET NO. C5.02

PI NO: 1294-06-065

DWG NO: 1294-06-065-07A.DWG

P-200708-01

PROPERTY OF POGUE ENGINEERING & DEVELOPMENT COMPANY, INC. THEIR USE FOR REPRODUCTION, CONSTRUCTION, OR DISTRIBUTION IS PROHIBITED UNLESS AUTHORIZED IN WRITING BY POGUE ENGINEERING & DEVELOPMENT COMPANY, INC.
THE ENGINEERING DESIGN, DETAIL AND ENGINEERING DRAWINGS FOR THIS PROJECT AND/OR OVERALL PROJECT ARE THE LEGAL
© POGUE ENGINEERING & DEVELOPMENT COMPANY, INC. 2007. ALL RIGHTS RESERVED

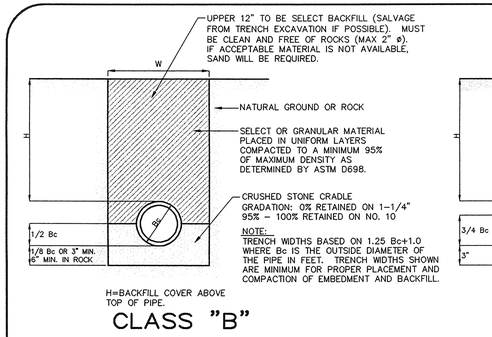

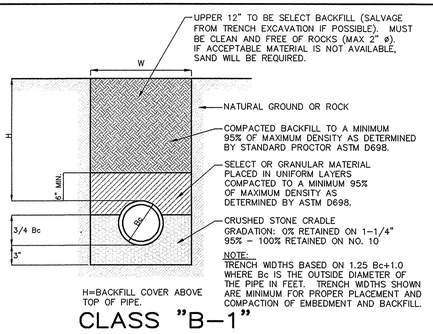

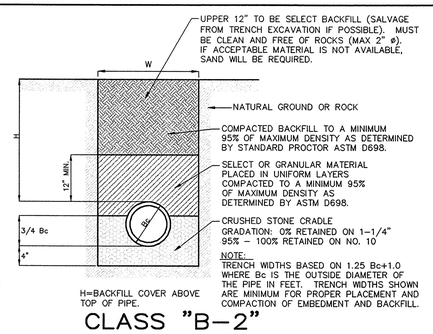

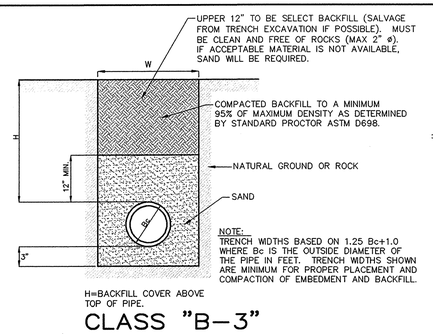

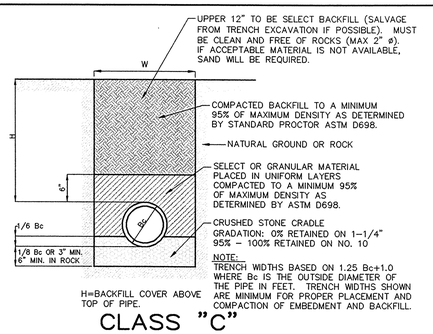

PIPE MATERIAL	EMBEDMENT
RCP	CLASS "B"
PVC	CLASS "B–1"
DUCTILE IRON	CLASS "B–3"
ADS	CLASS "B–2"
CLAY	CLASS "C"

THE EMBEDMENT CONSISTS OF A CRADLE OF FINE CRUSHED STONE AND A CAP OF SELECT MATERIAL OR GRANULAR MATERIAL.

BEDDING LAYER TO BE BROUGHT TO A POINT SLIGHTLY ABOVE GRADE WITH COMPACTED FINE CRUSHED STONE, STANDARD GRADATION. BELL HOLES SHALL BE FORMED, A TROUGH SCOOPED OUT TO GRADE AND THE PIPE LAID AND JOINTED AS SPECIFIED. THE STONE SHALL BE BROUGHT UP IN UNIFORM LAYERS ON EITHER SIDE TO THE POINT SHOWN ON THE EMBEDMENT DETAIL.

THE EMBEDMENT BACKFILL SHALL CONSIST OF SELECT OR GRANULAR MATERIAL. THE MATERIAL SHALL BE PLACED ON TOP OF THE CRUSHED STONE IN UNIFORM LAYERS TO THE HEIGHT AS SHOWN ON THE DETAIL.

NOTE:
ALL PUBLIC MAINS SHALL HAVE 3/4" ROCK A MINIMUM OF 6" ABOVE PIPE

01 C5.03 PIPE EMBEDMENT DETAIL
NOT TO SCALE

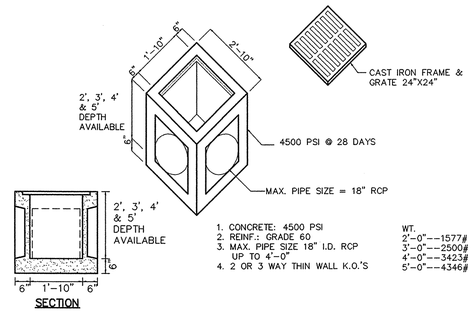

02 C5.03 AMERICAN INDUSTRIAL PRE–CAST CATCH BASIN NO. 24
NOT TO SCALE

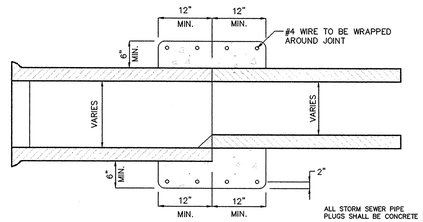

03 C5.03 CONCRETE COLLAR
NOT TO SCALE

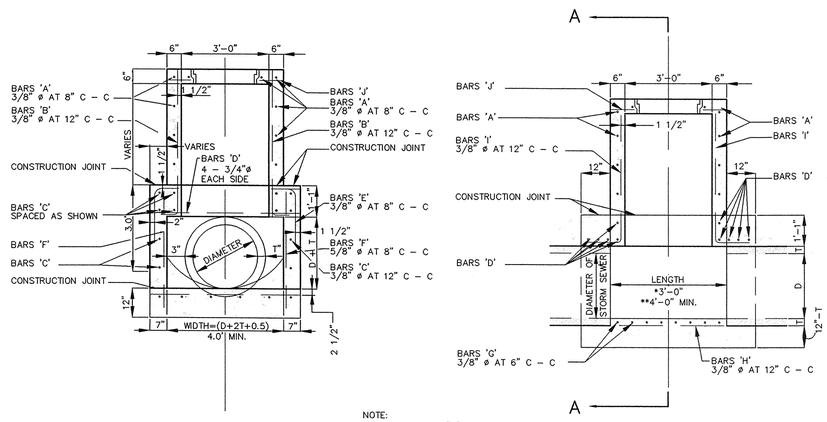

NOTE:
* APPLIES TO TYPE "A" MANHOLE
** APPLIES TO TYPE "B" MANHOLE

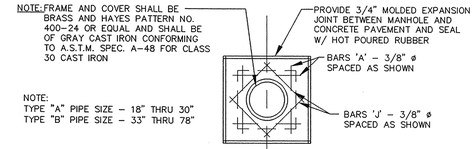

04 C5.03 STORM SEWER MANHOLE
NOT TO SCALE

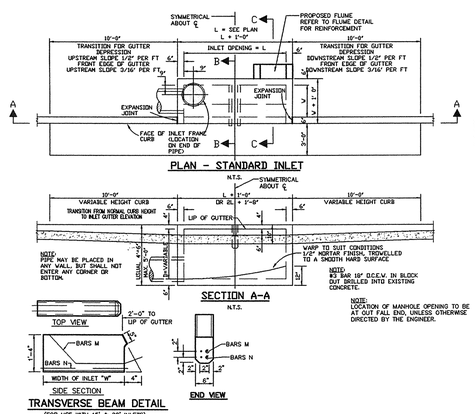

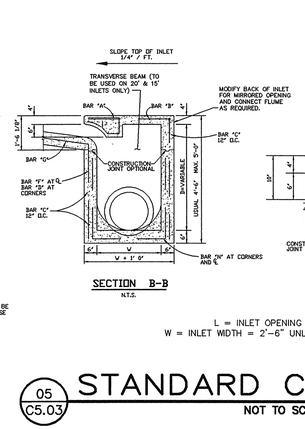

L = INLET OPENING (SEE PLAN)
W = INLET WIDTH = 2'–6" UNLESS OTHERWISE NOTED

05 C5.03 STANDARD CURB INLET
NOT TO SCALE

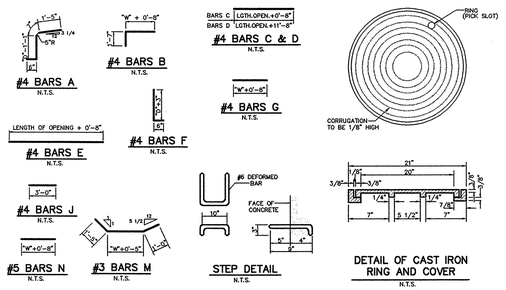

CURB INLET GENERAL NOTES:

1. ALL CONCRETE SHALL BE 3000 P.S.I. CONCRETE.
2. REINFORCING BARS AND STEPS SHALL BE STANDARD, MILD STEEL, DEFORMED REINFORCING BARS OF A DIAMETER AND LENGTH AS SHOWN.
3. CHAMFER ALL EXPOSED CORNERS 3/4" EXCEPT WHERE OTHERWISE NOTED.
4. DIMENSIONS RELATING TO REINFORCING STEEL ARE TO CENTERS OF BARS.
5. FIELD CUT AND BEND BARS AS NECESSARY TO ACCOMMODATE STORM SEWER PIPE.
6. CAST IRON CASTINGS SHALL CONFORM TO T.H.D. ITEM 471.
7. RING AND COVER SHALL BE PROVIDED BY THE CONTRACTOR AND INSTALLED BY THE CONTRACTOR.
8. EXCAVATION SHALL BE DONE BY THE CONTRACTOR.
9. DURING STAGE I CONSTRUCTION, INLETS WILL NOT BE CONSTRUCTED ABOVE SUB–GRADE ELEVATION UNLESS SO PERMITTED BY THE ENGINEER.
10. A TEMPORARY WOOD COVER SHALL BE INSTALLED AFTER STAGE I IS COMPLETED AND WILL REMAIN IN PLACE UNTIL STAGE II IS BEGUN.

RECORD DRAWINGS:
IT WAS THE INTENT THAT THE IMPROVEMENTS SHOWN BE CONSTRUCTED ACCORDING TO THESE PLANS AS APPROVED BY THE CITY. THE LINES AND GRADES WERE SET ON THE GROUND FOR CONSTRUCTION ACCORDING TO SAID PLANS. THE CITY INSPECTED THE CONSTRUCTION. THE ENGINEER DID NOT VERIFY LINES OR GRADES AFTER CONSTRUCTION. WE ARE NOT AWARE OF ANY CHANGES OR REVISIONS TO THESE PLANS DURING CONSTRUCTION OTHER THAN THOSE SHOWN.

RANDALL P. POGUE, P.E. DATE: FEBRUARY 22, 2008
TX LIC. NO. 84780

NO.	DATE	REVISION / DESCRIPTION
2	02–22–08	RECORD DRAWINGS
1	10–16–07	TXDOT COMMENTS

DESIGN	DRAWN	DATE	SCALE	NOTES
RPP	BEC	08–24–07	AS SHOWN	–

ARCHITECT
JIM WILSON ARCHITECTS
217 WOOD STREET
McKINNEY, TEXAS 75069
MR. JIM WILSON
(972) 562–9903 PHONE
(972) 547–4111 FAX

PROJECT INFORMATION
INDEPENDENT BANK
BLOCK A, LOT 1, MILLER ADDITION
CELINA, COLLIN COUNTY, TEXAS
J.K. RICE SURVEY, ABSTRACT NO. 767
PROPOSED USE: BANK
ZONING: PRO (PRESTON ROAD OVERLAY)

THE SEAL APPEARING ON THIS DOCUMENT WAS AUTHORIZED BY RANDALL P. POGUE, P.E. 84780 ON 08/24/07. ALTERATION OF A SEALED DOCUMENT WITHOUT PROPER NOTIFICATION TO THE RESPONSIBLE ENGINEER IS AN OFFENSE UNDER THE TEXAS ENGINEERING PRACTICE ACT.

STATE OF TEXAS
RANDALL P. POGUE
84780
LICENSED
PROFESSIONAL ENGINEER

POGUE
ENGINEERING & DEVELOPMENT COMPANY, INC.
1515 HERITAGE DRIVE
SUITE 105
McKINNEY, TEXAS 75069
(214) 544–8880 PHONE
(214) 544–8882 FAX
www.PogueEngineering.com

STORM SEWER DETAILS

INDEPENDENT BANK
BLOCK A, LOT 1, MILLER ADDITION
J.K. RICE SURVEY, ABSTRACT NO. 767
CITY OF CELINA, TEXAS

SHEET NO. C5.03

PI NO: 1294–06–065

DWG NO: 1294–06–065–07A.DWG
P-200708-01

TWILLIAMS 02/22/2008 – 9:50AM
N:\JOBS\1200–1299\1294–06–065\DWG\1294–06–065–07A.DWG

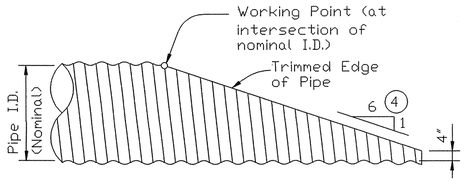

NOTE: All Cross Pipes, calculations, and dimensions are based on the pipe culverts mitered as shown in this detail. Alternate styles of mitered ends will require that appropriate adjustments be made to the values presented on this standard.

SIDE ELEVATION OF TYPICAL PIPE CULVERT MITER

(Showing Corrugated Metal Pipe Culvert.)
(Details at Concrete Pipe Culvert are similar.)

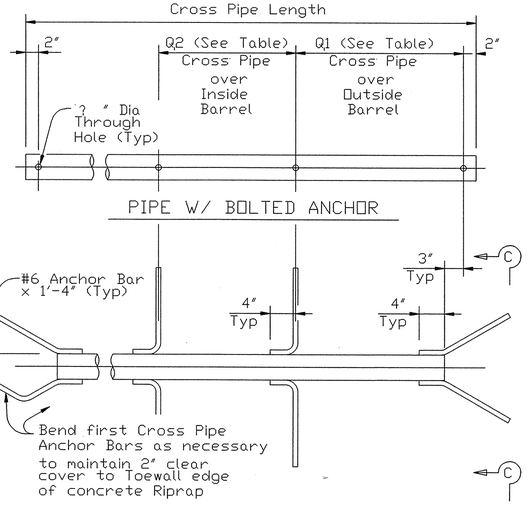

PIPE W/ BOLTED ANCHOR

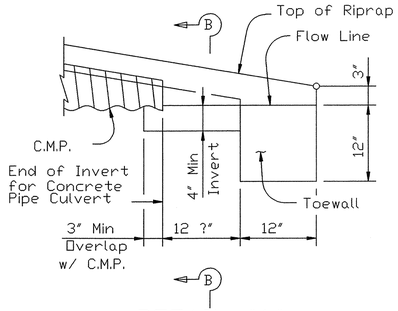

DETAIL "A"

(Showing Invert with Corrugated Metal Pipe Culvert. Concrete Pipe Culvert details are similar. Cross Pipes not shown for clarity.)

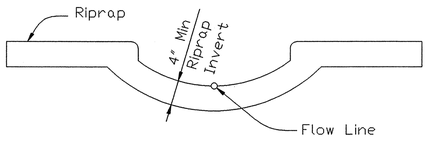

SECTION B-B

(Cross Pipes not shown for clarity.)

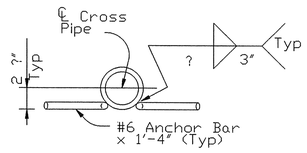

PIPE W/ ANCHOR BARS

SECTION C-C

CROSS PIPE DETAILS

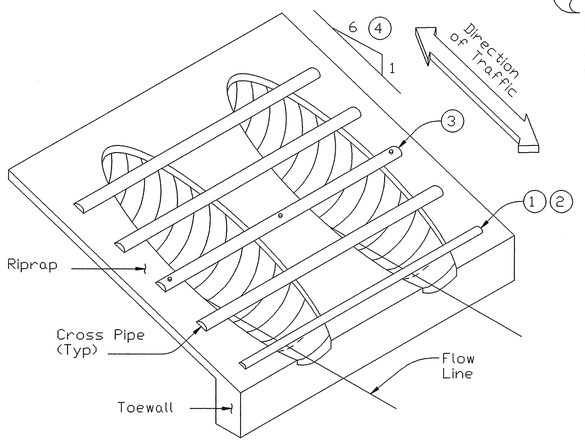

ISOMETRIC VIEW OF TYPICAL INSTALLATION

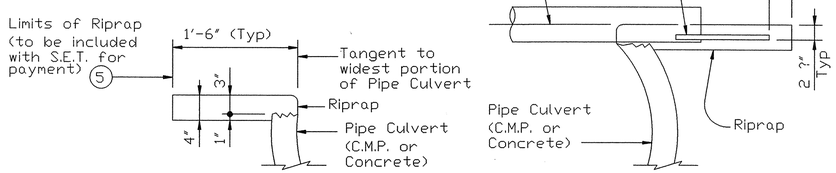

SHOWING TYPICAL PIPE CULVERT & RIPRAP

SHOWING CROSS PIPE WITH ANCHOR BAR

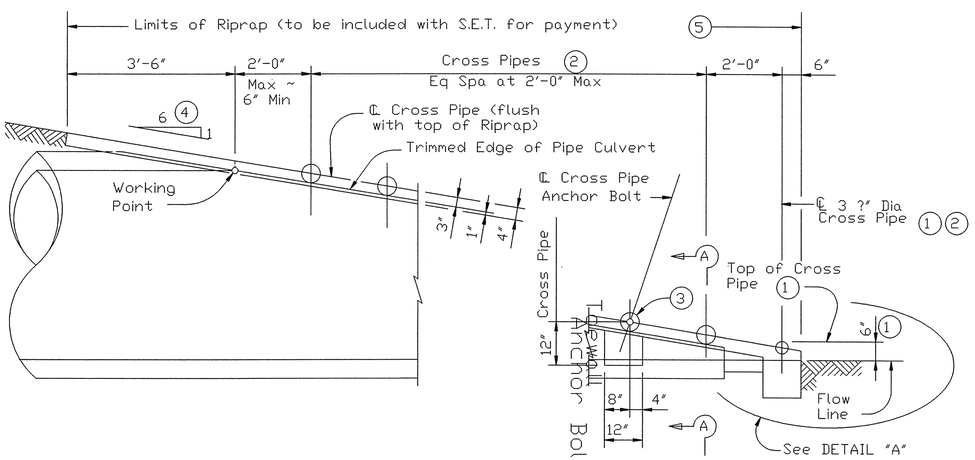

SIDE ELEVATION OF CAST-IN-PLACE CONCRETE

(Showing Concrete Pipe Culvert.)
(Details at Corrugated Metal Pipe Culvert are similar.)

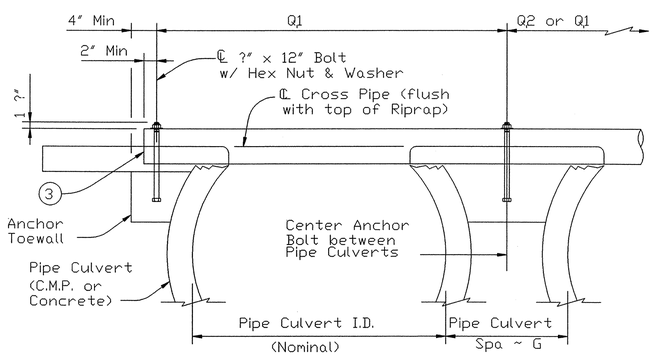

SHOWING CROSS PIPE WITH BOLTED ANCHOR

SECTION A-A

CROSS PIPE LENGTHS, REQUIRED PIPE SIZES, & RIPRAP QUANTITIES (2)

Nominal Culvert I.D.	Conc Riprap (CY) (6)	Pipe Culvert Spa ~ G	Single Barrel ~ Q1	Multi-Barrel ~ Q1	Q2	Conditions for use of Cross Pipes	Cross Pipe Size
12"	0.6	9"	N/A	2'- 1"	1'- 9"	3 or more Pipe Culverts	3" Std (3.500" O.D.)
15"	0.7	11"	N/A	2'- 5"	2'- 2"		
18"	0.8	1'- 2"	N/A	2'-10"	2'- 8"		
21"	0.9	1'- 4"	N/A	3'- 2"	3'- 1"		
24"	0.9	1'- 7"	N/A	3'- 6"	3'- 7"		
27"	1.0	1'- 8"	N/A	3'-10"	3'-11"	3 or more Pipe Culverts	3 ?" Std (4.000" O.D.)
30"	1.1	1'-10"	N/A	4'- 2"	4'- 4"	2 or more Pipe Culverts	
33"	1.2	1'-11"	4'- 2"	4'- 5"	4'- 8"	All Pipe Culverts	
36"	1.3	2'- 1"	4'- 5"	4'- 9"	5'- 1"	All Pipe Culverts	4" Std (4.500" O.D.)
42"	1.5	2'- 4"	4'-11"	5'- 5"	5'-10"		
48"	1.7	2'- 7"	5'- 5"	6'- 0"	6'- 7"	All Pipe Culverts	5" Std (5.563" O.D.)
54"	2.0	3'- 0"	5'-11"	6'- 9"	7'- 6"		
60"	2.2	3'- 3"	6'- 5"	7'- 4"	8'- 3"		
66"	2.4	3'- 3"	6'-11"	7'-10"	8'- 9"		
72"	2.7	3'- 4"	7'- 5"	8'- 5"	9'- 4"		

(1) The proper installation of the first Cross Pipe is critical for vehicle safety. The top of the first Cross Pipe must be placed at no more than 6" above the flow line.

(2) Size of Cross Pipes, except the first bottom pipe, shall be as shown in the PIPE SIZE table. The first bottom pipe shall be 3 ?" Standard Pipe (4" O.D.).

(3) The third Cross Pipe from the bottom of the Culvert shall always be installed using a bolted connection. Care shall be taken to ensure that Riprap concrete does not flow into the Cross Pipe so as to permit disassembly of the bolted connection to allow cleanout access. At the Contractor's option, all other Cross Pipes may also be installed using the bolted connection details.

(4) Match Cross Slope as shown elsewhere in the plans. Cross Slope of 6:1 or flatter is required for vehicle safety.

(5) Riprap placed beyond the limits shown will be paid as Concrete Riprap in accordance with Item 432, "Riprap".

(6) Quantities shown are for one end of one reinforced Concrete Pipe Culvert. For multiple pipe culverts or for Corrugated Metal Pipe Culverts, quantities will need to be adjusted. Riprap quantities are for Contractor's information only.

GENERAL NOTES:

Cross Pipes are designed for a traversing load of 10,000 pounds at yield as recommended by Research Report 280-2F, "Safety Treatment of of Roadside Parallel-Drainage Structures", Texas Transportation Institute, March 1981.

Safety End Treatments shown herein are intended for use in those installations where out of control vehicles are likely to traverse the openings approximately perpendicular to the Cross Pipes.

Riprap and all necessary inverts shall be Concrete Riprap conforming to the requirements of Item 432, "Riprap".

Payment for riprap and toewall is included in the Price Bid for each Safety End Treatment.

Cross Pipes shall conform to the requirements of ASTM A53 (Type E or S, Grade B), ASTM A500 (Grade B), or API 5LX52.

Bolts and nuts shall conform to ASTM A307.

All steel components, except concrete reinforcing, shall be galvanized after fabrication. Galvanizing damaged during transport or construction shall be repaired in accordance with the specifications.

STANDARD PLANS
Texas Department of Transportation
Bridge Division

SAFETY END TREATMENT
FOR 12" DIA TO 72" DIA PIPE CULVERTS TYPE II ~ PARALLEL DRAINAGE

SETP-PD

FILE: setppdse.dgn	DN: GAF	CK: CAT	DW: JRP	CK: GAF
© TxDOT May 2005	DISTRICT	FEDERAL AID PROJECT		SHEET
REVISIONS				
	COUNTY	CONTROL	SECT	JOB	HIGHWAY

C5.04

PI NO: 1294-06-065

DWG NO: 1294-06-065-07A.DWG

P-200708-01

DISCLAIMER:
The use of this standard is governed by the "Texas Engineering Practice Act". No warranty of any kind is made by TxDOT for any purpose whatsoever. TxDOT assumes no responsibility for the conversion of this standard to other formats or for incorrect results or damages resulting from its use.

LEVELS DISPLAYED
1 2 3 4 5 6 7 8 9 10 11 12 13 14 15 16 17 18 19 20 21 22 23 24 25 26 27 28 29 30 31 32 33 34 35 36 37 38 39 40 41 42 43 44 45 46 47 48 49 50 51 52 53 54 55 56 57 58 59 60 61 62 63
ACC:

TWILLIAMS 02/22/2008 - 9:50AM
N:\JOBS\1200-1299\1294-06-065\DWG\1294-06-065-07A.DWG

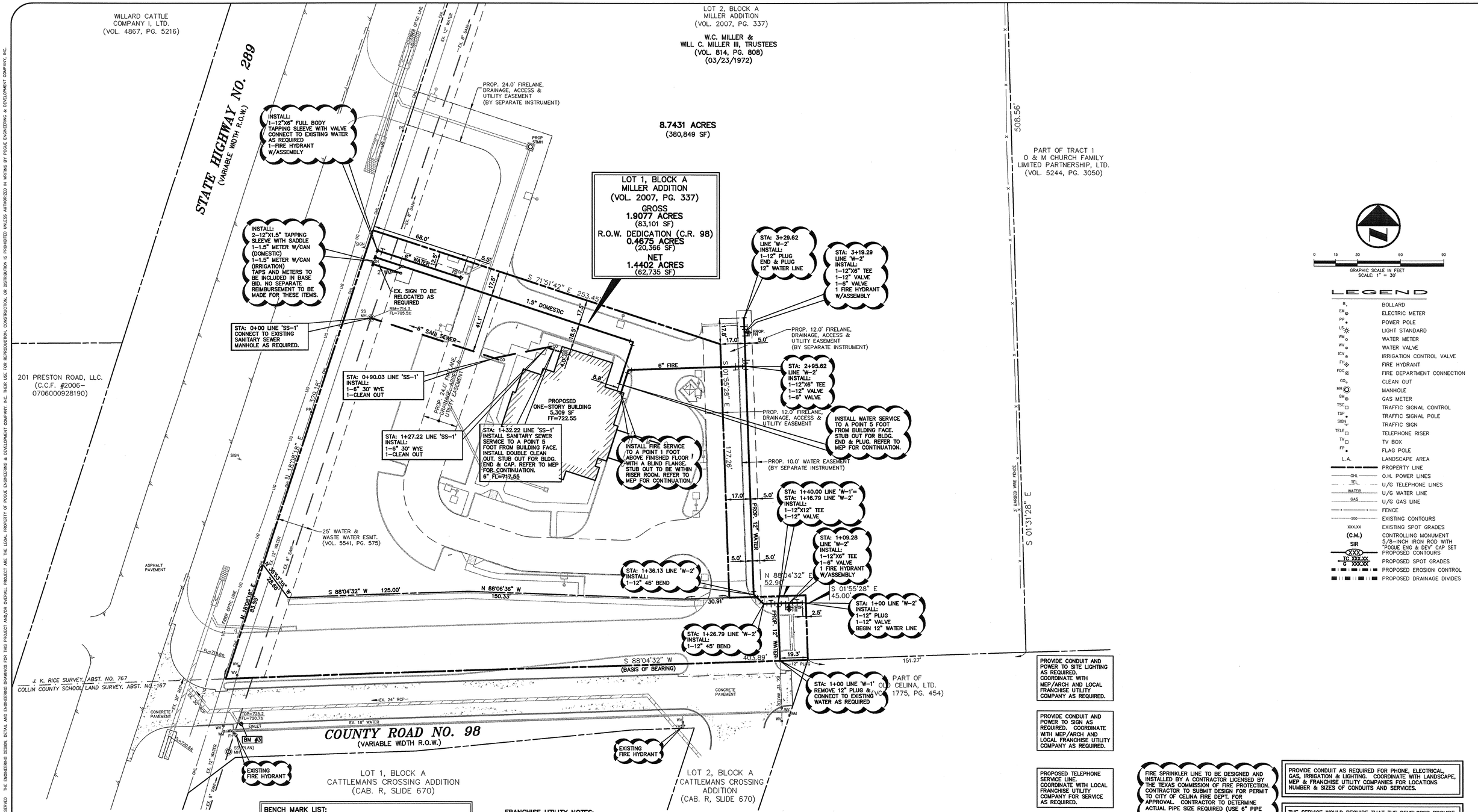

INDEPENDENT BANK - CELINA

CAUTION!!! UNDERGROUND UTILITIES ARE LOCATED IN THIS AREA. 48 HOURS PRIOR TO ANY CONSTRUCTION ACTIVITIES, CONTACT LINE LOCATES FOR FRANCHISE UTILITY INFO. CALL BEFORE YOU DIG: TEXAS EXCAVATION SAFETY SYSTEM (TESS) 1-800-344-8377 TEXAS ONE CALL SYSTEMS 1-800-245-4545 LONE STAR NOTIFICATION CENTER 1-800-669-8344 EXT. 5 BEFORE YOU DIG...

BENCH MARK LIST:

BENCHMARK #1 (RM1 PER FEMA MAP)
SQUARE CUT ON NORTH END OF WEST HEADWALL OF CULVERT ON STATE ROUTE 289, 350± FEET SOUTH OF INTERSECTION WITH FM 455
ELEVATION = 702.97

BENCHMARK #2
"+" CUT ON TOP OF CONCRETE HEADWALL LOCATED AT SOUTHEAST CORNER OF THE INTERSECTION OF PRESTON ROAD AND FM 455
ELEVATION = 714.27

BENCHMARK #3
SQUARE CUT ON TOP OF CURB CENTERLINE OF STORM SEWER INLET LOCATED AT SOUTH SIDE OF C.R. 98 100'± EAST FROM CENTERLINE OF S.H. 289
ELEVATION = 725.24

FRANCHISE UTILITY NOTES:
1. TXU ELECTRIC DELIVER – MR. ALLAN BAXTER – (972) 569-6309
2. AT&T – MR. STEVE TURPIE – (972) 569-4756

RECORD DRAWINGS:
IT WAS THE INTENT THAT THE IMPROVEMENTS SHOWN BE CONSTRUCTED ACCORDING TO THESE PLANS AS APPROVED BY THE CITY. THE LINES AND GRADES WERE SET ON THE GROUND FOR CONSTRUCTION ACCORDING TO SAID PLANS. THE CITY INSPECTED THE CONSTRUCTION. THE ENGINEER DID NOT VERIFY LINES OR GRADES AFTER CONSTRUCTION. WE ARE NOT AWARE OF ANY CHANGES OR REVISIONS TO THESE PLANS DURING CONSTRUCTION OTHER THAN THOSE SHOWN.

RANDALL P. POGUE, P.E. TX LIC. NO. 84780 DATE: FEBRUARY 22, 2008 (2)

NO.	DATE	REVISION / DESCRIPTION
2	02-22-08	RECORD DRAWINGS
1	10-16-07	TXDOT COMMENTS

DESIGN	DRAWN	DATE	SCALE	NOTES
RPP	BEC	08-24-07	AS SHOWN	–

ARCHITECT
JIM WILSON ARCHITECTS
217 WOOD STREET
McKINNEY, TEXAS 75069
MR. JIM WILSON
(972) 562-9903 PHONE
(972) 547-4111 FAX

PROJECT INFORMATION
INDEPENDENT BANK
BLOCK A, LOT 1, MILLER ADDITION
CELINA, COLLIN COUNTY, TEXAS
J.K. RICE SURVEY, ABSTRACT NO. 767
PROPOSED USE: BANK
ZONING: PRO (PRESTON ROAD OVERLAY)

THE SEAL APPEARING ON THIS DOCUMENT WAS AUTHORIZED BY RANDALL P. POGUE, P.E. 84780 ON 08/24/07. ALTERATION OF A SEALED DOCUMENT WITHOUT PROPER NOTIFICATION TO THE RESPONSIBLE ENGINEER IS AN OFFENSE UNDER THE TEXAS ENGINEERING PRACTICE ACT.

STATE OF TEXAS RANDALL P. POGUE 84780 LICENSED PROFESSIONAL ENGINEER

POGUE ENGINEERING & DEVELOPMENT COMPANY, INC.
1515 HERITAGE DRIVE
SUITE 105
McKINNEY, TEXAS 75069
(214) 544-8880 PHONE
(214) 544-8882 FAX
www.PogueEngineering.com

WATER & SANITARY SEWER PLAN

INDEPENDENT BANK
BLOCK A, LOT 1, MILLER ADDITION
J.K. RICE SURVEY, ABSTRACT NO. 767
CITY OF CELINA, TEXAS

SHEET NO. C6.01

PI NO: 1294-06-065

DWG NO: 1294-06-065-07A.DWG

P-200708-01

THE ENGINEERING DESIGN, DETAIL AND ENGINEERING DRAWINGS FOR THIS PROJECT AND/OR OVERALL PROJECT ARE THE LEGAL PROPERTY OF POGUE ENGINEERING & DEVELOPMENT COMPANY, INC. THEIR USE FOR REPRODUCTION, CONSTRUCTION, OR DISTRIBUTION IS PROHIBITED UNLESS AUTHORIZED IN WRITING BY POGUE ENGINEERING & DEVELOPMENT COMPANY, INC.
© POGUE ENGINEERING & DEVELOPMENT COMPANY, INC. 2007, ALL RIGHTS RESERVED

TWILLIAMS 02/22/2008 - 9:50AM
N:\JOBS\1200-1299\1294-06-065\DWG\1294-06-065-07A.DWG

PROPERTY OF POGUE ENGINEERING & DEVELOPMENT COMPANY, INC. THEIR USE FOR REPRODUCTION, CONSTRUCTION, OR DISTRIBUTION IS PROHIBITED UNLESS AUTHORIZED IN WRITING BY POGUE ENGINEERING & DEVELOPMENT COMPANY, INC.
THE ENGINEERING DESIGN, DETAIL AND ENGINEERING DRAWINGS FOR THIS PROJECT AND/OR OVERALL PROJECT ARE THE LEGAL
© POGUE ENGINEERING & DEVELOPMENT COMPANY, INC. 2007, ALL RIGHTS RESERVED

TWILLIAMS - 02/22/2008 - 9:51AM
N:\JOBS\1200-1299\1294-06-065\DWG\1294-06-065-07A.DWG

INDEPENDENT BANK – CELINA

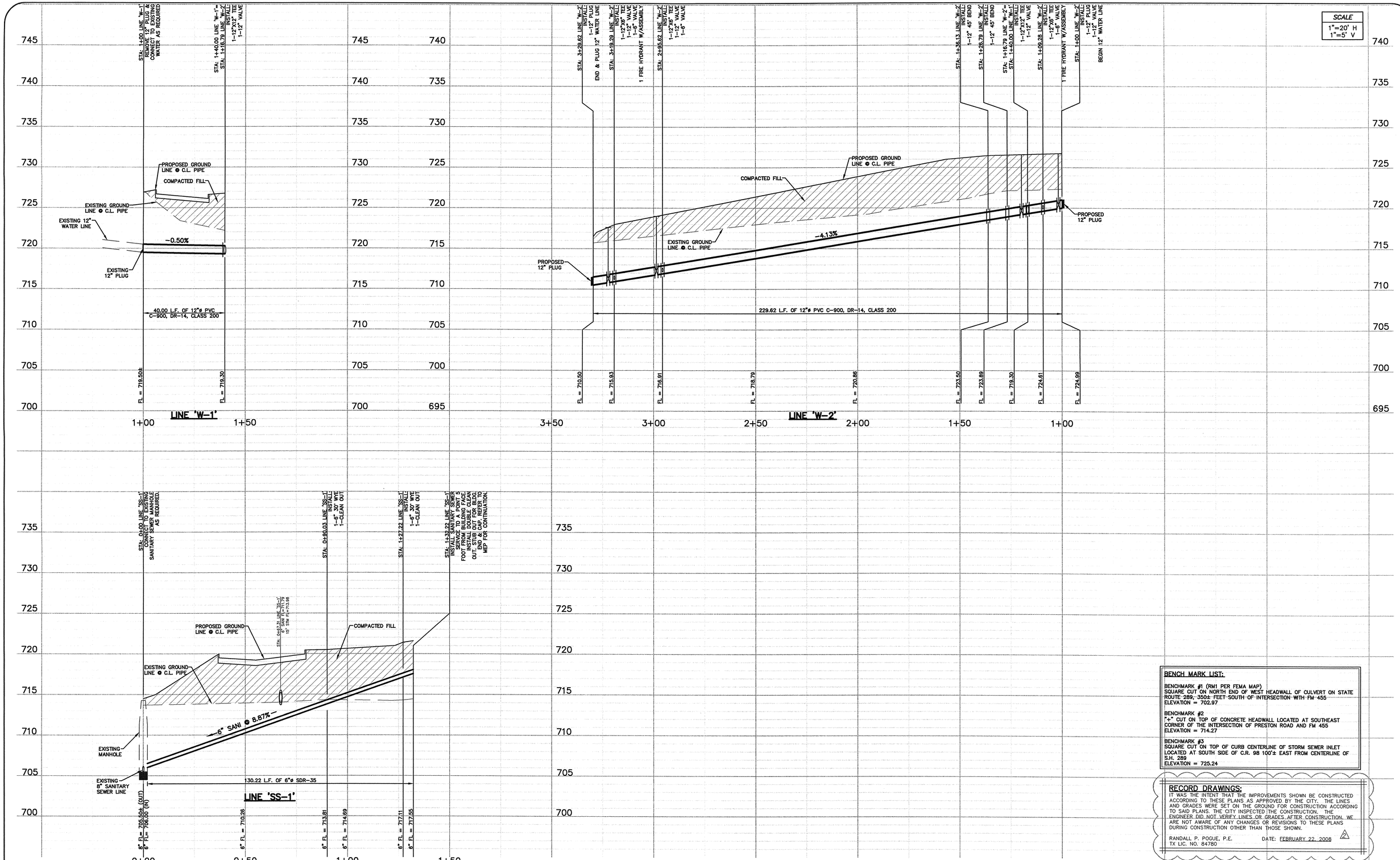

BENCH MARK LIST:

BENCHMARK #1 (RM1 PER FEMA MAP)
SQUARE CUT ON NORTH END OF WEST HEADWALL OF CULVERT ON STATE ROUTE 289, 350± FEET SOUTH OF INTERSECTION WITH FM 455
ELEVATION = 702.97

BENCHMARK #2
"+" CUT ON TOP OF CONCRETE HEADWALL LOCATED AT SOUTHEAST CORNER OF THE INTERSECTION OF PRESTON ROAD AND FM 455
ELEVATION = 714.27

BENCHMARK #3
SQUARE CUT ON TOP OF CURB CENTERLINE OF STORM SEWER INLET LOCATED AT SOUTH SIDE OF C.R. 98 100'± EAST FROM CENTERLINE OF S.H. 289
ELEVATION = 725.24

RECORD DRAWINGS:
IT WAS THE INTENT THAT THE IMPROVEMENTS SHOWN BE CONSTRUCTED ACCORDING TO THESE PLANS AS APPROVED BY THE CITY. THE LINES AND GRADES WERE SET ON THE GROUND FOR CONSTRUCTION ACCORDING TO SAID PLANS. THE CITY INSPECTED THE CONSTRUCTION. THE ENGINEER DID NOT VERIFY LINES OR GRADES AFTER CONSTRUCTION. WE ARE NOT AWARE OF ANY CHANGES OR REVISIONS TO THESE PLANS DURING CONSTRUCTION OTHER THAN THOSE SHOWN.

RANDALL P. POGUE, P.E. DATE: FEBRUARY 22, 2008
TX LIC. NO. 84780

NO.	DATE	REVISION / DESCRIPTION
2	02-22-08	RECORD DRAWINGS
1	10-16-07	TXDOT COMMENTS

DESIGN	DRAWN	DATE	SCALE	NOTES
RPP	BEC	08-24-07	AS SHOWN	-

ARCHITECT
JIM WILSON ARCHITECTS
217 WOOD STREET
McKINNEY, TEXAS 75069
MR. JIM WILSON
(972) 562-9903 PHONE
(972) 547-4111 FAX

PROJECT INFORMATION
INDEPENDENT BANK
BLOCK A, LOT 1, MILLER ADDITION
CELINA, COLLIN COUNTY, TEXAS
J.K. RICE SURVEY, ABSTRACT NO. 767
PROPOSED USE: BANK
ZONING: PRO (PRESTON ROAD OVERLAY)

THE SEAL APPEARING ON THIS DOCUMENT WAS AUTHORIZED BY RANDALL P. POGUE, P.E. 84780 ON 08/24/07. ALTERATION OF A SEALED DOCUMENT WITHOUT PROPER NOTIFICATION TO THE RESPONSIBLE ENGINEER IS AN OFFENSE UNDER THE TEXAS ENGINEERING PRACTICE ACT.

R. P. Pogue 8-24-07

STATE OF TEXAS · RANDALL P. POGUE · 84780 · LICENSED · PROFESSIONAL ENGINEER

POGUE ENGINEERING & DEVELOPMENT COMPANY, INC.
1515 HERITAGE DRIVE
SUITE 105
McKINNEY, TEXAS 75069
(214) 544-8880 PHONE
(214) 544-8882 FAX
www.PogueEngineering.com

WATER & SANITARY SEWER PROFILES

INDEPENDENT BANK
BLOCK A, LOT 1, MILLER ADDITION
J.K. RICE SURVEY, ABSTRACT NO. 767
CITY OF CELINA, TEXAS

SHEET NO. C6.02

PI NO: 1294-06-065

DWG NO: 1294-06-065-07A.DWG
P-200708-01

PROPERTY OF POGUE ENGINEERING & DEVELOPMENT COMPANY, INC. THIS USE FOR REPRODUCTION, CONSTRUCTION, OR DISTRIBUTION IS PROHIBITED UNLESS AUTHORIZED IN WRITING BY POGUE ENGINEERING & DEVELOPMENT COMPANY, INC.
THE ENGINEERING DESIGN, DETAIL AND ENGINEERING DRAWINGS FOR THIS PROJECT AND/OR OVERALL PROJECT ARE THE LEGAL
© POGUE ENGINEERING & DEVELOPMENT COMPANY, INC. 2007. ALL RIGHTS RESERVED

INDEPENDENT BANK – CELINA

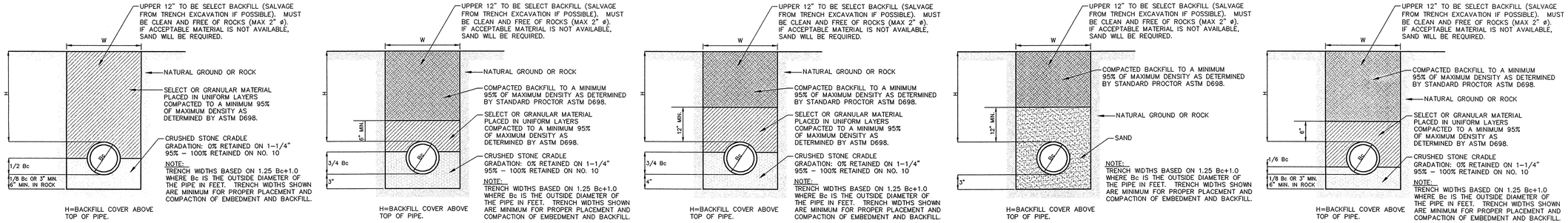

PIPE MATERIAL	EMBEDMENT
RCP	CLASS "B"
PVC	CLASS "B–1"
DUCTILE IRON	CLASS "B–3"
ADS	CLASS "B–2"
CLAY	CLASS "C"

THE EMBEDMENT CONSISTS OF A CRADLE OF FINE CRUSHED STONE AND A CAP OF SELECT MATERIAL OR GRANULAR MATERIAL.

BEDDING LAYER TO BE BROUGHT TO A POINT SLIGHTLY ABOVE GRADE WITH COMPACTED FINE CRUSHED STONE, STANDARD GRADATION. BELL HOLES SHALL BE FORMED, A TROUGH SCOOPED OUT TO GRADE AND THE PIPE LAID AND JOINTED AS SPECIFIED. THE STONE SHALL BE BROUGHT UP IN UNIFORM LAYERS ON EITHER SIDE TO THE POINT SHOWN ON THE EMBEDMENT DETAIL.

THE EMBEDMENT BACKFILL SHALL CONSIST OF SELECT OR GRANULAR MATERIAL. THE MATERIAL SHALL BE PLACED ON TOP OF THE CRUSHED STONE IN UNIFORM LAYERS TO THE HEIGHT AS SHOWN ON THE DETAIL.

NOTE: TRACER TAPE SHALL BE PROVIDED ABOVE ALL PLASTIC PIPE.

NOTE: ALL PUBLIC MAINS SHALL HAVE 3/4" ROCK A MINIMUM OF 6" ABOVE PIPE

01 C6.03 PIPE EMBEDMENT DETAIL
N.T.S.

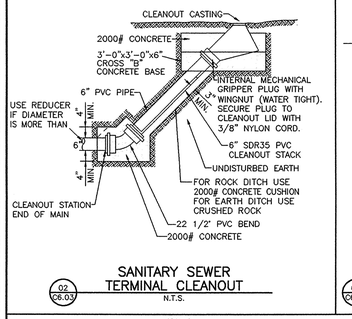

02 C6.03 SANITARY SEWER TERMINAL CLEANOUT
N.T.S.

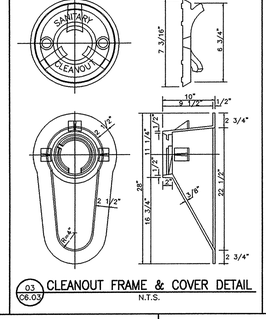

03 C6.03 CLEANOUT FRAME & COVER DETAIL
N.T.S.

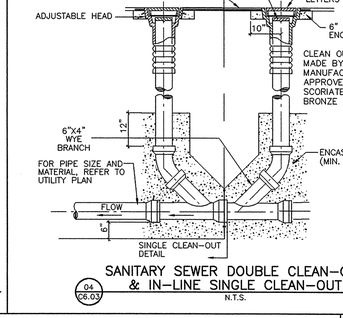

04 C6.03 SANITARY SEWER DOUBLE CLEAN–OUT & IN–LINE SINGLE CLEAN–OUT
N.T.S.

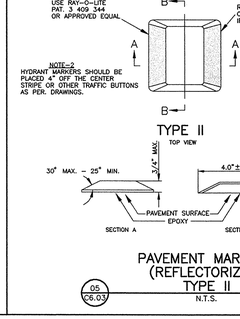

05 C6.03 PAVEMENT MARKERS (REFLECTORIZED) TYPE II
N.T.S.

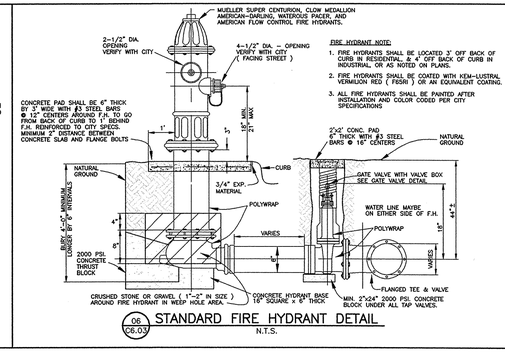

06 C6.03 STANDARD FIRE HYDRANT DETAIL
N.T.S.

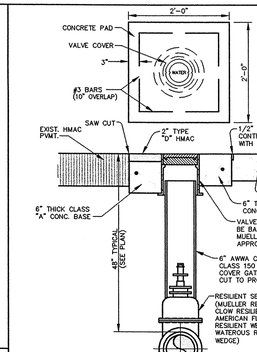

VALVES WITHIN ROADWAYS OR OTHER PAVED OR SURFACED AREAS

VALVES IN YARDS OR OTHER AREAS NOT SUBJECT TO TRAFFIC

NOTE
1. CLASS 'A' CONCRETE SHALL HAVE 5 SACKS OF CEMENT/C.Y., A MAXIMUM SLUMP OF 5" AND A 3,000 PSI COMPRESSIVE STRENGTH AT 28 DAYS.
2. ALL ITEMS SHOWN INCLUDED IN VALVE AND BOX UNIT PRICE. COMPLETE IN PLACE.
3. WHERE VALVE IS LOCATED IN THE PAVEMENT USE ADJUSTABLE VALVE STACKS.
4. ALL CAST IRON AND DUCTILE IRON FITTINGS SHALL BE WRAPPED IN POLYWRAP.
5. VALVES IN EXCESS OF 4' DEEP MUST HAVE AN OPERATING NUT EXTENSION TO MAINTAIN A 4' DEPTH. A BESCO GATE VALVE EXTENSION STEM OR APPROVED EQUAL SHALL BE USED TO BRING THE VALVE OPERATING NUT TO WITHIN 12" TO 18" OF FINISHED GRADE. MUELLER VALVES TO USE EXTENSION RECOMMENDED BY MUELLER COMPANY.
6. VALVES SHALL BE SUPPORTED ON A 24" x 24" x 6" CONCRETE PAD AND WRAPPED IN POLYWRAP.

07 C6.03 VALVE BOX INSTALLATION DETAIL
N.T.S.

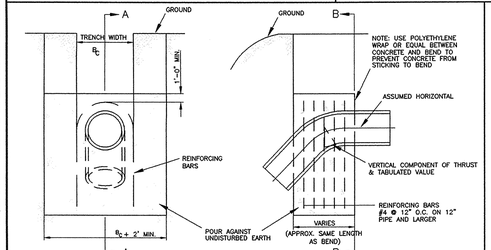

△	11.25°		22.50°		30°		45°		67.50°		90°		△
I.D. (IN.)	THRUST TONS	VOL. C.Y.	THRUST TONS	VOL. C.Y.	THRUST TONS	VOL. C.Y.	THRUST TONS	VOL. C.Y.	THRUST TONS	VOL. C.Y.	THRUST TONS	VOL. C.Y.	I.D. (IN.)
4,6,8	1.0	0.5	2.0	1.0	2.5	1.3	3.6	1.8	4.6	2.3	5.0	2.5	4,6,8
10,12	2.2	1.1	4.3	2.2	5.7	2.8	8.0	4.0	10.5	5.2	11.3	5.7	10,12
16,18	5.0	2.5	9.7	4.9	12.7	6.4	18.0	9.0	23.5	11.8	25.5	12.7	16,18
20	6.1	3.1	12.0	6.0	15.7	7.9	22.2	11.1	29.2	14.5	31.4	15.7	20
24	8.2	4.4	17.3	8.7	22.6	11.3	32.0	16.0	41.8	20.9	45.2	22.6	24
30	10.5	5.2	20.3	10.1	26.5	13.3	37.5	18.8	49.0	24.5	53.1	26.5	30
36	14.9	7.5	29.2	14.6	38.2	19.1	54.0	27.0	70.5	35.3	76.4	38.2	36
42	20.3	10.1	39.8	19.9	52.0	26.0	73.5	36.7	96.0	48.0	104.0	52.0	42
48	26.5	13.2	51.9	26.0	67.9	33.9	96.0	48.0	126.0	62.7	136.0	67.9	48
54	33.5	16.8	65.7	32.9	85.9	42.9	122.0	60.7	159.0	79.4	172.0	85.9	54
60	41.4	20.7	81.2	40.6	106.0	53.0	150.0	75.0	196.0	98.0	212.0	106.0	60
66	50.1	25.0	98.2	49.1	128.0	64.2	182.0	90.7	237.0	119.0	257.0	128.0	66
72	59.6	29.8	117.0	58.4	153.0	76.3	216.0	108.0	282.0	141.0	305.0	153.0	72
78	69.9	35.0	137.0	68.6	179.0	90.0	254.0	127.0	331.0	166.0	358.0	179.0	78
84	81.1	40.5	159.0	79.5	208.0	104.0	294.0	147.0	384.0	192.0	416.0	208.0	84
90	93.1	46.5	183.0	91.3	239.0	119.0	337.0	169.0	441.0	221.0	477.0	239.0	90
96	106.0	53.0	208.0	104.0	272.0	136.0	384.0	192.0	502.0	251.0	543.0	272.0	96

VERTICAL THRUST BLOCK NOTES:
1. ALL CALCULATIONS ARE BASED ON INTERNAL PRESSURE OF 200 P.S.I. FOR 24" I.D. PIPE AND SMALLER AND 150 P.S.I. ON 30" I.D. AND LARGER.
2. VOLUMES OF VERTICAL BEND THRUST BLOCKS ARE NET VOLUMES OF CONCRETE TO BE FURNISHED. THE CORRESPONDING WEIGHT OF THE CONCRETE IS EQUAL TO OR GREATER THAN THE VERTICAL COMPONENT OF THRUST ON THE VERTICAL BEND.
3. WALL THICKNESS (T) ASSUMED HERE FOR ESTIMATING PURPOSES ONLY.
4. CONCRETE FOR BLOCKING SHALL BE 2000 P.S.I. CONCRETE.
5. DIMENSIONS MAY BE VARIED AS REQUIRED BY FIELD CONDITIONS WHERE AND AS DIRECTED BY THE ENGINEER. THE VOLUME OF CONCRETE BLOCKING SHALL NOT BE LESS THAN SHOWN HERE.

08 C6.03 DIMENSIONS OF CONCRETE FOR VERTICAL THRUST BLOCKS AT FITTINGS
N.T.S.

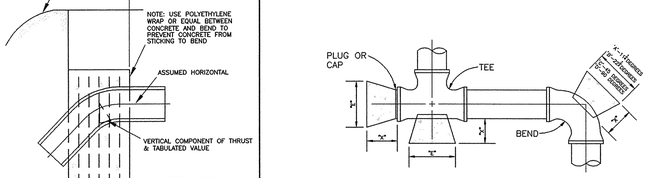

PIPE SIZE	X–* DIA. FT.	11 1/4 DEGREES		22 1/2 DEGREES		45 DEGREES		90 DEGREES		TEE & PLUG	
		"A"	MIN. AREA	"B"	MIN. AREA	"C"	MIN. AREA	"D"	MIN. AREA	"E"	MIN. AREA
4"	1.5	1.00	1.00	1.00	1.00	1.00	1.00	1.00	1.06	1.00	1.00
6"	1.5	1.00	1.00	1.00	1.00	1.14	1.30	1.55	2.40	1.30	1.70
8"	1.5	1.00	1.00	1.08	1.18	1.52	2.31	2.07	4.27	1.74	3.02
10"	1.5	1.00	1.00	1.35	1.84	1.90	3.61	2.58	6.66	2.17	4.71
12"	1.5	1.00	1.33	1.63	2.65	1.86	5.19	3.10	9.60	2.61	6.79
14"	1.5	1.03	1.81	1.90	3.60	2.66	7.07	3.61	13.06	3.04	9.246
16"	2.0	1.18	2.36	2.17	4.71	3.04	9.23	4.13	17.06	3.47	12.06
18"	2.0	1.33	2.99	2.44	5.96	3.42	11.69	4.65	21.59	3.91	15.27
20"	2.0	1.48	3.70	2.71	7.35	3.80	14.43	5.16	26.86	4.34	18.85
21"	2.0	1.55	4.07	2.85	8.11	3.99	15.91	5.42	29.39	4.56	20.78
24"	2.0	1.77	5.32	3.25	10.59	4.56	20.77	6.20	38.39	5.21	27.14
27"	2.5	1.99	6.73	3.66	13.40	5.13	26.29	6.97	48.58	5.86	34.35
30"	2.5	2.22	8.31	4.07	16.55	5.70	32.46	7.74	59.98	6.51	42.41
33"	2.5	2.44	10.06	4.47	20.02	6.27	39.28	8.52	72.57	7.16	51.31
36"	2.5	2.66	11.97	4.88	23.83	6.84	46.74	9.29	86.37	7.81	61.07
39"	3.0	2.88	14.05	5.29	27.97	7.41	54.86	10.07	101.36	8.47	71.68
42"	3.0	3.10	16.30	5.69	32.43	7.98	63.62	10.85	117.56	9.12	83.13

HORIZONTAL THRUST BLOCK NOTES:
1. USE FORD RETAINER GLANDS WITH ALL BENDS, UNIFLANGE SERIES 1400 FOR DUCTILE IRON PIPE AND SERIES 1500 FOR P.V.C. PIPE, OR AN APPROVED EQUAL.
2. ALL CALCULATIONS ARE BASED ON A WATER LINE PRESSURE OF 150 p.s.i. AND AN ALLOWABLE SOIL BEARING VALUE OF 2,500 POUNDS PER SQUARE FEET.
3. 2000 PSI. CONCRETE SHALL BE USED FOR ALL BLOCKING.
4. THE MINIMUM VERTICAL DIMENSIONS OF ALL BLOCKING SHALL BE 1.5 TIMES THE PIPE DIAMETER WITH AT LEAST 0.75 TIMES THE PIPE DIAMETER EXTENDING BOTH ABOVE AND BELOW THE PIPE CENTERLINE. THIS DIMENSION DETERMINES THE "X" DIMENSION FOR 11 1/4° BENDS.
5. FOR 22–1/2°, 45°, 90°, AND TEE AND PLUGS, THE VERTICAL DIMENSION SHALL BE EQUAL TO THE HORIZONTAL DIMENSION SHOWN TO PRODUCE THE REQUIRED MINIMUM AREA.
6. ALL MINIMUM AREAS ARE IN SQUARE FEET.

09 C6.03 DIMENSIONS OF CONCRETE FOR HORIZONTAL THRUST BLOCKS AT FITTINGS
N.T.S.

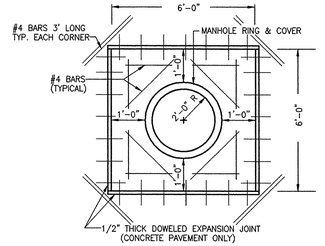

10 C6.03 MANHOLE BLOCKOUT (SANITARY SEWER) IN PAVEMENT
N.T.S.

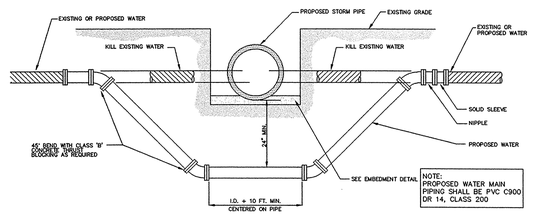

11 C6.03 STANDARD WATER MAIN LOWERING
N.T.S.

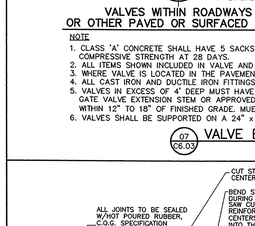

NOTE:
SAW CUT TO REPAIR ASPHALT OR CONCRETE PAVEMENT PRIOR TO OPENING THE DITCH IN ORDER TO ENSURE A NEAT STRAIGHT EDGE.

14 C6.03 STREET BACK FILL & REPAIR
N.T.S.

TABLE OF DIMENSIONS FOR WIDTH OF TRENCH AND PAVEMENT REPLACEMENT

NORMAL SIZE OF PIPE IN INCHES	O.D. OF PIPE BELL IN INCHES (PVC–DR18)	MINIMUM TRENCH WALL CLEARANCE "A" IN INCHES	WIDTH OF TRENCH ('X') MAXIMUM ** IN INCHES	WIDTH OF TRENCH ('X') MINIMUM ** IN INCHES	WIDTH OF PVMT. REPLACEMENT * ('W') CONC. & ASPHALT **
6	6.9	6	24	19	48
8	9.05	6	24	21	48
10	11.10	6	28	24	48
12	13.20	6	30	26	50
16+	VARIES	8	*	*	*

NOTE: * REFER TO THE PLANS FOR SPECIFIED WIDTH OF REPLACEMENT.
** RECOMMENDED WIDTHS – VARIES BASED ON DEPTH. AND SOIL MATERIAL.

RECORD DRAWINGS:
IT WAS THE INTENT THAT THE IMPROVEMENTS SHOWN BE CONSTRUCTED ACCORDING TO THESE PLANS AS APPROVED BY THE CITY. THE LINES AND GRADES WERE SET ON THE GROUND FOR CONSTRUCTION ACCORDING TO SAID PLANS. THE CITY INSPECTED THE CONSTRUCTION. THE ENGINEER DID NOT VERIFY LINES OR GRADES AFTER CONSTRUCTION. WE ARE NOT AWARE OF ANY CHANGES OR REVISIONS TO THESE PLANS DURING CONSTRUCTION OTHER THAN THOSE SHOWN.

RANDALL P. POGUE, P.E.
TX LIC. NO. 84780
DATE: FEBRUARY 22, 2008 2

NO.	DATE	REVISION / DESCRIPTION
2	02-22-08	RECORD DRAWINGS
1	10-16-07	TXDOT COMMENTS

DESIGN	DRAWN	DATE	SCALE	NOTES
RPP	BEC	08-24-07	AS SHOWN	–

ARCHITECT
JIM WILSON ARCHITECTS
217 WOOD STREET
McKINNEY, TEXAS 75069
MR. JIM WILSON
(972) 562–9903 PHONE
(972) 547–4111 FAX

PROJECT INFORMATION
INDEPENDENT BANK
BLOCK A, LOT 1, MILLER ADDITION
CELINA, COLLIN COUNTY, TEXAS
J.K. RICE SURVEY, ABSTRACT NO. 767
PROPOSED USE: BANK
ZONING: PRO (PRESTON ROAD OVERLAY)

THE SEAL APPEARING ON THIS DOCUMENT WAS AUTHORIZED BY RANDALL P. POGUE, P.E. 84780 ON 08/24/07. ALTERATION OF A SEALED DOCUMENT WITHOUT PROPER NOTIFICATION TO THE RESPONSIBLE ENGINEER IS AN OFFENSE UNDER THE TEXAS ENGINEERING PRACTICE ACT.

STATE OF TEXAS
RANDALL P. POGUE
84780
LICENSED
PROFESSIONAL ENGINEER

POGUE
ENGINEERING & DEVELOPMENT COMPANY, INC.
1515 HERITAGE DRIVE
SUITE 105
McKINNEY, TEXAS 75069
(214) 544–8880 PHONE
(214) 544–8882 FAX
www.PogueEngineering.com

WATER & SANITARY SEWER DETAILS

INDEPENDENT BANK
BLOCK A, LOT 1, MILLER ADDITION
J.K. RICE SURVEY, ABSTRACT NO. 767
CITY OF CELINA, TEXAS

SHEET NO. C6.03

PI NO: 1294–06–065
DWG NO: 1294–06–065–07A.DWG
P-200708-01

TWILLIAMS 02/22/2008 – 9:51AM
N:\JOBS\1200–1299\1294–06–065\DWG\1294–06–065–07A.DWG

PAVING AND DRAINAGE GENERAL NOTES:

1. ALL WORK UNLESS OTHERWISE NOTED, SHALL CONFORM TO THE STANDARD SPECIFICATIONS FOR PUBLIC WORKS CONSTRUCTION, AS ISSUED BY THE NORTH CENTRAL TEXAS COUNCIL OF GOVERNMENTS, AND THE CITY OF CELINA STANDARD CONSTRUCTION SPECIFICATIONS. COPIES OF NCTCOG SPECIFICATIONS CAN BE OBTAINED BY CONTACTING NCTCOG @ 616 SIX FLAGS DRIVE, SUITE 200, ARLINGTON, TEXAS 76005-5888. (817) 640-3300

2. UNLESS OTHERWISE NOTED, ALL CONCRETE SHALL BE TYPE IA, CLASS 'A', 3000 PSI STRENGTH AT 28 DAYS. CONCRETE FOR INLET AND DRAINAGE STRUCTURES SHALL BE TYPE I, CLASS 'F', 4200 PSI STRENGTH AT 28 DAYS.

3. THE HORIZONTAL AND VERTICAL LOCATIONS OF EXISTING SUBSURFACE UTILITIES HAVE BEEN DETERMINED FROM DATA RECORDED BY OTHERS. THE CONTRACTOR SHALL VERIFY THAT ALL NECESSARY CROSSING CLEARANCES BETWEEN EXISTING AND PROPOSED UTILITIES EXIST PRIOR TO CONSTRUCTION OF ANY SUCH CROSSING. IT IS THE RESPONSIBILITY OF THE CONTRACTOR TO VERIFY SIZE AND LOCATION OF ALL UTILITIES PRIOR TO CONSTRUCTION. IT WILL BE THE RESPONSIBILITY OF THE CONTRACTOR TO PROTECT ALL PUBLIC UTILITIES IN THE CONSTRUCTION OF THIS PROJECT.

4. IT WILL BE THE RESPONSIBILITY OF THE CONTRACTOR TO PROTECT ALL MANHOLES, CLEAN OUTS, VALVE BOXES, FIRE HYDRANTS, ETC. THEY MUST BE ADJUSTED TO THE PROPER LINE AND GRADE BY THE CONTRACTOR PRIOR TO AND AFTER THE PLACING OF PERMANENT PAVING AND GRADING. UTILITIES MUST BE MAINTAINED TO PROPER LINE AND GRADE THROUGHOUT THE CONSTRUCTION OF THIS PROJECT.

5. CONTRACTOR SHALL MAINTAIN ONE SET OF "RECORD DRAWINGS" ON SITE WHICH WILL BE SUBMITTED TO THE OWNER OR ENGINEER UPON COMPLETION OF THE PROJECT. RECORD DRAWINGS SHALL INDICATE THE LOCATION OF ALL SUBTERRANEAN UTILITY IMPROVEMENTS AND/OR RELOCATIONS. THEY SHALL ALSO INCLUDE DIMENSIONAL TIES TO ALL MANHOLES, CULVERTS, INLETS, JUNCTION BOXES, FIRE HYDRANTS, ETC.

6. CONTRACTOR SHALL BE RESPONSIBLE FOR MAINTAINING AND BEING IN COMPLIANCE WITH ALL FEDERAL (O.S.H.A. STANDARDS AND REGULATIONS), STATE AND LOCAL REGULATIONS REGARDING TRENCH SAFETY.

7. BARRICADING AND PROJECT SIGNS SHALL CONFORM TO "STATE DEPARTMENT OF HIGHWAYS AND PUBLIC TRANSPORTATION BARRICADING AND CONSTRUCTION STANDARDS" ON TxDOT ROADWAYS AND "TEXAS MANUAL ON UNIFORM TRAFFIC CONTROL DEVICES, PART VI" FOR PRIVATE WORK. BARRICADES AND PROJECT SIGNS SHALL ALSO MEET CITY CODE.

8. UNLESS OTHERWISE NOTED, THE STORM DRAIN LINES MAY BE OF THE FOLLOWING MATERIALS:
   A. CLASS III, RCP C-76 (CIRCULAR), C-506 (ARCH), C-507 (ELLIPTICAL)
   B. ADS N-12, ADS N-12 WT FOR WATER TIGHT APPLICATIONS
INSTALLED IN ACCORDANCE WITH THE MANUFACTURER'S SPECIFICATIONS.

9. RCP STORM SEWER JOINT MATERIALS MAY BE OF THE FOLLOWING (ASTM C-990):
   A. RAM-NECK
   B. CON-SEAL
   C. CEMENT GROUT
INSTALLED IN ACCORDANCE WITH THE MANUFACTURER'S SPECIFICATIONS.

10. STORM SEWER CONNECTIONS FOR NEW INTERCEPTING MAINS SHALL BE FACTORY WYES FOR 48" AND SMALLER PIPE.

(1) 11. ALL HEADWALLS SHALL BE PRE-CAST, TxDOT 6:1 TYPE 'C' HEADWALL (SETP-PD).

12. GRADING OF ALL HANDICAPPED SPACES AND ROUTES SHALL CONFORM TO STATE, LOCAL AND FEDERAL REGULATIONS. THE MAXIMUM CROSS FALL SHALL BE 2% (1' IN 50') AND THE MAXIMUM SLOPE FOR INGRESS/EGRESS ALONG THE ROUTE SHALL BE 5% (1' IN 20'), AND A 2% MAXIMUM SLOPE IN ANY DIRECTION MUST BE MAINTAINED WITHIN THE FIRST 5' FROM ANY ENTRY OR EXIT OF A BUILDING OR LANDING AREA.

13. FINAL PAVING, CURB AND SIDEWALK ELEVATIONS SHALL BE PLACED AT THE PROPOSED GRADE ELEVATIONS WITHIN PLUS OR MINUS 0.05 FEET.

14. ANY CONCRETE, ROCK, DEBRIS OR MATERIAL DEEMED UNSUITABLE FOR SUB-GRADE BY THE ENGINEER SHALL BE DISPOSED OF OFF SITE AT THE CONTRACTOR'S EXPENSE.

15. TRENCH BACK FILL MATERIAL SHALL CONFORM TO THE REQUIREMENTS OF NCTCOG ITEM 6.2.10 AND SHALL BE MECHANICALLY COMPACTED IN ACCORDANCE WITH NCTCOG ITEM 6.2.9 TO A MINIMUM OF 95 PERCENT STANDARD PROCTOR DENSITY UNLESS OTHERWISE SHOWN ON THESE PLANS OR STATED IN THE CITY STANDARD SPECIFICATIONS OR IN THE GEOTECHNICAL REPORT.

16. EMBEDMENT FOR PIPES SHALL CONFORM TO THE REQUIREMENTS OF NCTCOG ITEM 6.2.9 UNLESS OTHERWISE SHOWN ON THESE PLANS OR NOTED IN THE STANDARD CITY SPECIFICATIONS. CRUSHED STONE BEDDING OR APPROVED EQUAL SHALL BE PROVIDED BY THE CONTRACTOR WHEN ROCK IS ENCOUNTERED IN TRENCHES. THERE SHALL BE NO ADDITIONAL PAY ITEM OF THE CRUSHED STONE BEDDING. IF ROCK IS ENCOUNTERED, ROCK SPOIL SHALL NOT BE USED IN THE UPPER 1.5 FEET OF THE TRENCH. THE UPPER 1.5 FEET OF TRENCH SHALL BE BACK FILLED WITH QUALITY TOPSOIL.

17. IF REQUIRED BY CONSTRUCTION, POWER POLES TO BE BRACED AND/OR RELOCATED AT THE CONTRACTOR'S EXPENSE.

18. REFER TO THE GEOTECHNICAL REPORT FOR REQUIREMENTS REGARDING FILL COMPACTION AND RELATED MOISTURE CONTENT.

19. DRAINAGE SHALL BE MAINTAINED AWAY FROM ALL FOUNDATIONS, BOTH DURING AND AFTER CONSTRUCTION.

20. TREES SHALL REMAIN AND BE PROTECTED UNLESS SPECIFIED OTHERWISE ON THE LANDSCAPE PLAN OR APPROVED BY THE OWNER AND THE CITY.

21. REFER TO THE ARCHITECTURAL AND M.E.P. PLANS FOR COORDINATION OF ALL UTILITY CONNECTIONS (ROOF DRAIN COLLECTION, WATER, SEWER, ETC.).

22. REFER TO THE PAVING AND DRAINAGE PLANS FOR ADDITIONAL INFORMATION RELATED TO SAID CONSTRUCTION.

23. PRIOR TO THE COMMENCEMENT OF ANY CONSTRUCTION ACTIVITIES, THE CONTRACTOR SHALL SUBMIT BOND AND THREE WAY CONTRACTS TO THE CITY AND OWNER AS REQUIRED.

WATER AND SANITARY SEWER GENERAL NOTES:

1. ALL WORK UNLESS OTHERWISE NOTED, SHALL CONFORM TO THE STANDARD SPECIFICATIONS FOR PUBLIC WORKS CONSTRUCTION, AS ISSUED BY THE NORTH CENTRAL TEXAS COUNCIL OF GOVERNMENTS, AND THE CITY OF CELINA STANDARD CONSTRUCTION SPECIFICATIONS. COPIES OF NCTCOG SPECIFICATIONS CAN BE OBTAINED BY CONTACTING NCTCOG @ 616 SIX FLAGS DRIVE, SUITE 200, ARLINGTON, TEXAS 76005-5888. (817) 640-3300

2. UNLESS OTHERWISE NOTED, ALL CONCRETE SHALL BE TYPE IA, CLASS 'A', 3000 PSI STRENGTH AT 28 DAYS. CONCRETE FOR INLET AND DRAINAGE STRUCTURES SHALL BE TYPE I, CLASS 'F', 4200 PSI STRENGTH AT 28 DAYS.

3. THE HORIZONTAL AND VERTICAL LOCATIONS OF EXISTING SUBSURFACE UTILITIES HAVE BEEN DETERMINED FROM DATA RECORDED BY OTHERS. THE CONTRACTOR SHALL VERIFY THAT ALL NECESSARY CROSSING CLEARANCES BETWEEN EXISTING AND PROPOSED UTILITIES EXIST PRIOR TO CONSTRUCTION OF ANY SUCH CROSSING. IT IS THE RESPONSIBILITY OF THE CONTRACTOR TO VERIFY SIZE AND LOCATION OF ALL UTILITIES PRIOR TO CONSTRUCTION. IT WILL BE THE RESPONSIBILITY OF THE CONTRACTOR TO PROTECT ALL PUBLIC UTILITIES IN THE CONSTRUCTION OF THIS PROJECT.

4. IT WILL BE THE RESPONSIBILITY OF THE CONTRACTOR TO PROTECT ALL MANHOLES, CLEAN OUTS, VALVE BOXES, FIRE HYDRANTS, ETC. THEY MUST BE ADJUSTED TO THE PROPER LINE AND GRADE BY THE CONTRACTOR PRIOR TO AND AFTER THE PLACING OF PERMANENT PAVING AND GRADING. UTILITIES MUST BE MAINTAINED TO PROPER LINE AND GRADE THROUGHOUT THE CONSTRUCTION OF THIS PROJECT.

5. CONTRACTOR SHALL MAINTAIN ONE SET OF "RECORD DRAWINGS" ON SITE WHICH WILL BE SUBMITTED TO THE OWNER OR ENGINEER UPON COMPLETION OF THE PROJECT. RECORD DRAWINGS SHALL INDICATE THE LOCATION OF ALL SUBTERRANEAN UTILITY IMPROVEMENTS AND/OR RELOCATIONS. THEY SHALL ALSO INCLUDE DIMENSIONAL TIES TO ALL MANHOLES, CULVERTS, INLETS, JUNCTION BOXES, FIRE HYDRANTS, ETC.

6. CONTRACTOR SHALL BE RESPONSIBLE FOR MAINTAINING AND BEING IN COMPLIANCE WITH ALL FEDERAL (O.S.H.A. STANDARDS AND REGULATIONS), STATE AND LOCAL REGULATIONS REGARDING TRENCH SAFETY.

7. BARRICADING AND PROJECT SIGNS SHALL CONFORM TO "STATE DEPARTMENT OF HIGHWAYS AND PUBLIC TRANSPORTATION BARRICADING AND CONSTRUCTION STANDARDS" ON TxDOT ROADWAYS AND "TEXAS MANUAL ON UNIFORM TRAFFIC CONTROL DEVICES, PART VI" FOR PRIVATE WORK. BARRICADES AND PROJECT SIGNS SHALL ALSO MEET CITY CODE.

8. ALL WATER MAINS 12" IN DIAMETER OR LESS SHALL BE DUCTILE IRON CLASS 51 WITH CATHODIC PROTECTION (8 MIL. POLYWRAP) OR PVC C-900, DR 14, CLASS 200 (DR 18, CLASS 150 IF 8 INCHES OR LESS).

9. ALL WATER MAINS UNLESS OTHERWISE NOTED SHALL HAVE A MINIMUM COVER OF 48 INCHES (4" THRU 8"); 60 INCHES (10" THRU 12"); 72 INCHES (14 INCHES AND LARGER) TO THE TOP OF PIPE BELOW FINISHED GRADES.

10. ALL WATER SERVICES TO BE INSTALLED IN ACCORDANCE TO CITY REQUIREMENTS.

11. ALL SANITARY SEWER PIPE TO BE PVC SDR-35, UNLESS OTHERWISE NOTED.

12. CONTRACTOR TO TEST WATER AND SANITARY SEWER LINES IN ACCORDANCE WITH THE STANDARD CITY SPECIFICATIONS.

13. ALL METER BOXES TO BE LOCATED IN NON-TRAFFIC AREAS.

14. FIRE SPRINKLER LINE TO BE SIZED AND INSTALLED BY A STATE LICENSED FIRE SPRINKLER CONTRACTOR.

15. FIRE HYDRANTS SHALL BE PLACED 3 FEET FROM THE BACK OF CURB LOCATED AS SHOWN ON THE PLANS. THE FIRE HYDRANT SHALL BE CITY APPROVED AND PAINTED TO BE COLOR CODED PER CITY REQUIREMENTS.

16. ALL UTILITIES INSTALLED OUTSIDE OF AN EASEMENT SHALL BE INSTALLED BY A LICENSED PLUMBER AND INSPECTED BY THE CITY CODE ENFORCEMENT.

17. ALL DUCTILE IRON FITTINGS SHALL BE OF THE MECHANICAL JOINT TYPE OR SLIP JOINT AND SHALL BE CLASS D, OR CLASS 250 ON SIZES 12 INCHES AND SMALLER IN ACCORDANCE WITH A.W.W.A. SPECIFICATIONS C-110-64 AND C-111-64.

18. CONCRETE BLOCKING SHALL BE PROVIDED ON WATER MAINS AT ALL TEES, BENDS AND FIRE HYDRANTS PER STANDARD CITY SPECIFICATIONS. PAYMENT FOR CONCRETE BLOCKING SHALL BE SUBSIDIARY TO PIPE INSTALLATION AND SHALL BE INCLUDED IN THE BID PRICE THEREOF.

19. ANY CONCRETE, ROCK, DEBRIS OR MATERIAL DEEMED UNSUITABLE FOR SUB-GRADE BY THE ENGINEER SHALL BE DISPOSED OF OFF SITE AT THE CONTRACTOR'S EXPENSE.

20. TRENCH BACK FILL MATERIAL SHALL CONFORM TO THE REQUIREMENTS OF NCTCOG ITEM 6.2.10 AND SHALL BE MECHANICALLY COMPACTED IN ACCORDANCE WITH NCTCOG ITEM 6.2.9 TO A MINIMUM OF 95 PERCENT STANDARD PROCTOR DENSITY UNLESS OTHERWISE SHOWN ON THESE PLANS OR STATED IN THE CITY STANDARD SPECIFICATIONS OR IN THE GEOTECHNICAL REPORT.

21. EMBEDMENT FOR PIPES SHALL CONFORM TO THE REQUIREMENTS OF NCTCOG ITEM 6.2.9 UNLESS OTHERWISE SHOWN ON THESE PLANS OR NOTED IN THE STANDARD CITY SPECIFICATIONS. CRUSHED STONE BEDDING OR APPROVED EQUAL SHALL BE PROVIDED BY THE CONTRACTOR WHEN ROCK IS ENCOUNTERED IN TRENCHES. THERE SHALL BE NO ADDITIONAL PAY ITEM OF THE CRUSHED STONE BEDDING. IF ROCK IS ENCOUNTERED, ROCK SPOIL SHALL NOT BE USED IN THE UPPER 1.5 FEET OF THE TRENCH. THE UPPER 1.5 FEET OF TRENCH SHALL BE BACK FILLED WITH QUALITY TOPSOIL.

22. CLASS "B" EMBEDMENT SHALL BE USED FOR RCP PIPE.

23. CLASS "B-1" EMBEDMENT SHALL BE USED FOR PVC PIPE.

24. CLASS "B-3" EMBEDMENT SHALL BE USED FOR DUCTILE IRON PIPE.

25. CLASS "C" EMBEDMENT SHALL BE USED FOR CLAY PIPE.

26. CLASS "B-2" EMBEDMENT SHALL BE USED FOR ADS PIPE.

27. IF REQUIRED BY CONSTRUCTION, POWER POLES TO BE BRACED AND/OR RELOCATED AT THE CONTRACTOR'S EXPENSE.

WATER AND SANITARY SEWER GENERAL NOTES CONT.:

28. REFER TO THE GEOTECHNICAL REPORT FOR REQUIREMENTS REGARDING FILL COMPACTION AND RELATED MOISTURE CONTENT.

29. TREES SHALL REMAIN AND BE PROTECTED UNLESS SPECIFIED OTHERWISE ON THE LANDSCAPE PLAN OR APPROVED BY THE OWNER AND THE CITY.

30. REFER TO THE ARCHITECTURAL AND M.E.P. PLANS FOR COORDINATION OF ALL UTILITY CONNECTIONS (ROOF DRAIN COLLECTION, WATER, SEWER, ETC.).

31. CONTRACTOR TO VERIFY ALL EXISTING UTILITIES FLOW LINES PRIOR TO BEGINNING CONSTRUCTION.

32. CONTRACTOR SHALL TIE A 1" WIDE PIECE OF RED PLASTIC FLAGGING TO THE END OF SEWER SERVICE AND SHALL LEAVE A MINIMUM OF 36" OF FLAGGING EXPOSED AFTER BACK FILL. AFTER CURB AND PAVING IS COMPLETE, CONTRACTOR SHALL MARK THE LOCATION OF THE SEWER SERVICE ON THE CURB OR PAVING WITH TWO CHISELED 6" CUTS (2" SEPARATION) IN ACCORDANCE WITH STANDARD CITY SPECIFICATIONS.

33. THE CONTRACTOR TO INSTALL THE WATER SERVICES TO A POINT 2 FEET FROM BACK OF THE CURB LINE AT A DEPTH OF 12 INCHES. THE METER BOX SHALL BE FURNISHED AND INSTALLED BY THE CONTRACTOR AFTER THE PAVING HAS BEEN COMPLETED AND THE FINE GRADING BEHIND THE CURB AND PAVING AREAS. EACH SERVICE LOCATION SHALL BE MARKED ON THE CURB OR PAVING WITH A CHISELED 6" CUT IN ACCORDANCE WITH STANDARD CITY SPECIFICATIONS AND TIED TO PROPERTY CORNERS ON THE "RECORD DRAWINGS"

34. VALVE BOXES SHALL BE FURNISHED AND SET ON EACH GATE VALVE. AFTER FINAL GRADING AND ALIGNMENT HAS BEEN COMPLETED, THE CONTRACTOR SHALL POUR A CONCRETE PAD BLOCK (24"X24"X6") AROUND ALL VALVES AS TO PROVIDE THE FINISHED GRADE OF THE PAD TO BE EQUAL TO THE FINISHED GRADES ADJACENT TO THE VALVES.

35. WHEN WATER AND SANITARY SEWER MAINS ARE INSTALLED, THEY SHALL BE INSTALLED NO CLOSER THAN NINE (9) FEET TO EACH OTHER IN ALL DIRECTIONS AS MEASURED FROM THE OUTSIDE OF THE PIPES. PARALLEL LINES SHALL BE INSTALLED IN SEPARATE TRENCHES. WHERE THE NINE FOOT SEPARATION DISTANCE CANNOT BE ACHIEVED OR MAINTAINED, THE FOLLOWING GUIDELINES SHALL APPLY:
   A. WHERE A SANITARY SEWER PARALLELS A WATER LINE, THE SEWER SHALL BE CONSTRUCTED OF CAST IRON, DUCTILE IRON OR PVC PIPE MEETING ASTM SPECIFICATIONS WITH A PRESSURE RATING FOR BOTH THE PIPE AND JOINTS OF 150 PSI. THE VERTICAL SEPARATION SHALL BE A MINIMUM OF 2 FEET BETWEEN OUTSIDE DIAMETERS AND THE HORIZONTAL SEPARATION SHALL BE A MINIMUM OF FOUR FEET BETWEEN OUTSIDE DIAMETERS. THE SEWER SHALL BE LOCATED BELOW THE WATER.
   B. WHERE A SANITARY SEWER CROSSES A WATERLINE AND THE SEWER IS CONSTRUCTED OF CAST IRON, DUCTILE IRON OR PVC WITH A MINIMUM PRESSURE RATING OF 150 PSI, AN ABSOLUTE MINIMUM DISTANCE OF SIX INCHES BETWEEN OUTSIDE DIAMETERS SHALL BE MAINTAINED. IN ADDITION, THE SEWER SHALL BE LOCATED BELOW THE WATERLINE WHERE POSSIBLE AND ONE LENGTH OF SEWER PIPE MUST BE CENTERED ON THE WATERLINE.
   C. WHERE A SANITARY SEWER CROSSES UNDER A WATERLINE AND THE SEWER IS CONSTRUCTED OF ABS TRUSS PIPE, SIMILAR SEMI-RIGID PLASTIC COMPOSITE PIPE, CLAY PIPE OR CONCRETE PIPE WITH GASKETED JOINTS, A MINIMUM OF TWO FOOT SEPARATION DISTANCE SHALL BE MAINTAINED. IN ADDITION, THE SEWER SHALL BE LOCATED BELOW THE WATERLINE WHERE POSSIBLE AND ONE LENGTH OF THE SEWER PIPE MUST BE CENTERED ON THE WATERLINE.
   D. WHERE A SEWER CROSSES OVER A WATERLINE ALL PORTIONS OF THE SEWER WITHIN NINE FEET OF THE WATERLINE SHALL BE CONSTRUCTED OF CAST IRON, DUCTILE IRON OR PVC PIPE WITH A PRESSURE RATING OF AT LEAST 150 PSI USING APPROPRIATE ADAPTERS. IN LIEU OF THIS PROCEDURE, THE NEW CONVEYANCE MAY BE ENCASED IN A JOINT OF 150 PSI PRESSURE CLASS PIPE AT LEAST 18 FEET LONG AND TWO NOMINAL SIZES LARGER THAN THE NEW CONVEYANCE. THE SPACE AROUND THE CARRIER PIPE SHALL BE SUPPORTED AT FIVE FEET INTERVALS WITH SPACERS OR BE FILLED TO THE SPRING LINE WITH WASHED SAND. THE ENCASEMENT PIPE SHOULD BE CENTERED ON THE CROSSING AND BOTH ENDS SEALED WITH CEMENT GROUT OR MANUFACTURED SEAL.
   E. THE SEWER NEED NOT BE DISTURBED WHERE A NEW WATERLINE IS TO BE INSTALLED PARALLEL TO AN EXISTING SEWER THAT SHOWS NO EVIDENCE OF LEAKAGE AND THE WATERLINE IS INSTALLED ABOVE THE SEWER A MINIMUM OF TWO FEET VERTICALLY AND FOUR FEET HORIZONTALLY. SHOULD EXCAVATION FOR THE WATERLINE PRODUCE EVIDENCE THAT THE SEWER IS LEAKING, THE SEWER MUST BE REPAIRED OR REPLACED AS DESCRIBED IN SUBPARAGRAPHS (A) OR (D) OF THIS PARAGRAPH.
   F. THE SEWER NEED NOT BE DISTURBED WHERE A NEW WATERLINE IS TO CROSS OVER (BY TWO FEET OR MORE) EXISTING SEWER SHOWING NO EVIDENCE OF LEAKAGE. SHOULD EXCAVATION FOR THE WATERLINE PRODUCE EVIDENCE THAT THE SEWER IS LEAKING, THEN THE SEWER MUST BE REPAIRED OR REPLACED AS DESCRIBED IN SUBSECTIONS (C) OF (D) OF THIS PARAGRAPH.

36. REFER TO THE WATER AND SEWER PLANS FOR ADDITIONAL INFORMATION RELATED TO SAID CONSTRUCTION.

37. PRIOR TO THE COMMENCEMENT OF ANY CONSTRUCTION ACTIVITIES, THE CONTRACTOR SHALL SUBMIT BOND AND THREE WAY CONTRACTS TO THE CITY AND OWNER AS REQUIRED.

RECORD DRAWINGS:
IT WAS THE INTENT THAT THE IMPROVEMENTS SHOWN BE CONSTRUCTED ACCORDING TO THESE PLANS AS APPROVED BY THE CITY. THE LINES AND GRADES WERE SET ON THE GROUND FOR CONSTRUCTION ACCORDING TO SAID PLANS. THE CITY INSPECTED THE CONSTRUCTION. THE ENGINEER DID NOT VERIFY LINES OR GRADES AFTER CONSTRUCTION. WE ARE NOT AWARE OF ANY CHANGES OR REVISIONS TO THESE PLANS DURING CONSTRUCTION OTHER THAN THOSE SHOWN.

RANDALL P. POGUE, P.E.
TX LIC. NO. 84780
DATE: FEBRUARY 22, 2008 (2)

LANDSCAPING GENERAL NOTES:

1. ALL MATERIALS FOR TURF GRASS PROVIDED SHALL BE IN ACCORDANCE WITH THE STANDARD SPECIFICATIONS FOR PUBLIC WORKS CONSTRUCTION, LATEST EDITION, AS ISSUED BY THE NORTH CENTRAL TEXAS COUNCIL OF GOVERNMENTS, AND THE CITY SPECIFICATIONS AND AS NOTED IN THE PLANS AND CONTRACT DOCUMENTS.

2. BERMUDA GRASS SEED. TURF GRASS SEED SHALL BE "CYNODON DACTYLON" (COMMON BERMUDA GRASS). THE SEED SHALL BE HARVESTED WITHIN ONE YEAR PRIOR TO PLANTING, FREE OF JOHNSON GRASS, FIELD BIND WEED, DODDER SEED, AND FREE OF OTHER WEED SEED TO THE LIMITS ALLOWABLE UNDER THE FEDERAL SEED ACT AND APPLICABLE SEED LAWS. THE SEED SHALL NOT BE A MIXTURE. THE SEED SHALL BE HULLED, EXTRA FANCY GRADE, TREATED WITH FUNGICIDE AND HAVE A GERMINATION AND PURITY THAT SHALL PRODUCE, AFTER ALLOWANCE FOR FEDERAL SEED ACT TOLERANCES, A PURE LIVE SEED CONTENT OF NOT LESS THAN 85%, USING THE FORMULA: PURITY PERCENT TIME (GERMINATION PERCENT TIMES PLUS HARD OR SOUND SEED FIVE PERCENT). SEED SHALL BE LABELED IN ACCORDANCE WITH U.S. DEPARTMENT OF AGRICULTURE RULES AND REGULATIONS.
   A. CERTIFICATE SUBMITTAL. PRIOR TO PLANTING, PROVIDE THE OWNER AND ENGINEER WITH THE STATE OF TEXAS CERTIFICATE STATING ANALYSIS OF PURITY AND GERMINATION OF SEED.

3. RYE GRASS SEED. TURF GRASS SEED SHALL BE "LOLIUM MULTIFLORUM" (ITALIAN OR ANNUAL RYE GRASS). THE SEED SHALL BE HARVESTED WITHIN ONE YEAR PRIOR TO PLANTING AND SHALL BE FREE OF PERENNIAL RYE GRASS SEED, OTHER GRASS SEED AND WEED SEED TO THE LIMITS ALLOWABLE UNDER THE FEDERAL SEED ACT AND APPLICABLE SEED LAWS. SEED SHALL BE AT LEASE 95% PURE AND SHALL HAVE A 90% MINIMUM GERMINATION RATE.
   A. CERTIFICATE SUBMITTAL. PRIOR TO PLANTING, PROVIDE THE OWNER AND ENGINEER WITH THE STATE OF TEXAS CERTIFICATE STATING ANALYSIS OF PURITY AND GERMINATION OF SEED.

4. TIMES OF HYDROMULCHING SHALL BE AS FOLLOWS:
   A. SEPTEMBER 1 TO APRIL 1 – RYE GRASS SEED SHALL BE APPLIED.
   B. APRIL 2 TO AUGUST 31 – BERMUDA GRASS SEED SHALL BE APPLIED.

CITY OF CELINA CONSTRUCTION GENERAL NOTES:

1. ALL CONSTRUCTION SHALL BE IN ACCORDANCE WITH THE LATEST REVISION OF THE NORTH CENTRAL TEXAS COUNCIL OF GOVERNMENTS "STANDARD SPECIFICATIONS FOR PUBLIC WORKS CONSTRUCTION" INCLUDING THE STANDARD DRAWINGS© THEREIN AND THE CITY OF CELINA'S ADDENDUM THERETO.

2. BEFORE BEGINNING CONSTRUCTION, THE CONTRACTOR SHALL PREPARE A CONSTRUCTION SEQUENCE SCHEDULE. THE CONSTRUCTION SCHEDULE SHALL BE SUCH THAT THERE IS THE MINIMUM INTERFERENCE WITH TRAFFIC ALONG OR ADJACENT TO THE PROJECT.

3. CONSTRUCTION MAY NOT BE BEGUN EARLIER THAN 7:00 A.M. ON WEEKDAYS NOR CONTINUED AFTER DARK WITHOUT PERMISSION FROM THE CITY OF CELINA. CONSTRUCTION ON HOLIDAYS AND SATURDAY MUST BE APPROVED TWO DAYS IN ADVANCE, A FEE OF $300.00 A DAY FOR WORKING ON HOLIDAYS AND SATURDAY WILL BE ACCESSED PAYABLE TO THE CITY BEFORE WORK IS PREFORMED. WORK MAY NOT BE BEGIN BEFORE 8:00 A.M. AND WORK ON SUNDAY IS PROHIBITED WITHOUT SPECIAL PERMISSION AND PAYMENT OF FEES.

4. UTILITIES SHOWN ON THE PLANS WERE TAKEN FROM FIELD SURVEYS AND INFORMATION PROVIDED BY THE UTILITY COMPANIES. THE COMPLETENESS AND THE ACCURACY OF THIS DATA IS NOT GUARANTEED.

   THE CONTRACTOR IS RESPONSIBLE FOR VERIFYING THE LOCATION OF ALL UNDERGROUND UTILITIES AND STRUCTURES AND PROTECTING THEM FROM DAMAGE DURING CONSTRUCTION.

5. WORK MAY NOT BE BACKFILLED OR COVERED UNTIL THE CITY HAS INSPECTED IT.

6. MATERIAL TESTING SHALL BE PERFORMED BY AN INDEPENDENT TESTING LABORATORY AND PAID FOR BY THE CONTRACTOR. THE FOLLOWING MATERIAL TESTS SHALL BE PROVIDED BY THE CONTRACTOR:
   a. EMBANKMENT – ONE SOIL DENSITY TEST SHALL BE PERFORMED AT EACH LOCATION FOR EACH 500 C.Y. OF BACKFILL PLACED.

PAVEMENT SUB GRADE – ONE GRADATION TEST (WHERE LIME STABILIZED) AND ONE SOIL DENSITY TEST SHALL BE PERFORMED FOR EACH 100 LINEAR FEET OF PAVEMENT UNLESS OTHERWISE NOTED.
   b. UTILITY TRENCH BACKFILL – ONE SOIL DENSITY TEST SHALL BE PERFORMED AS DIRECTED BY CITY OF CELINA.. (EVERY 300 LF OF TRENCH)
   c. CONCRETE TESTS:
      (1). COMPRESSIVE STRENGTH – AS SPECIFIED IN THE N.C.T.C.O.G. SPECIFICATIONS OR CITY SPECIFICATIONS.
AIR CONTENT – ONE TEST FOR EACH 25 C.Y. OF CONCRETE OR FRACTION THEREOF UNLESS OTHERWISE NOTED.
      (2). SLUMP – ONE TEST FOR EACH 9 C.Y. UNLESS OTHERWISE NOTED.

THE CITY SHALL SELECT THE LOCATION AND DEPTH OF EACH SOIL DENSITY TEST. UNLESS OTHERWISE DIRECTED.

7. ALL EXCAVATION ON THE PROJECT IS UNCLASSIFIED.

8. TEMPORARY EROSION CONTROL SHALL BE USED TO MINIMIZE THE SPREAD OF SILT AND MUD FROM THE PROJECT ON TO EXISTING STREETS, ALLEYS, DRAINAGE WAYS AND PUBLIC AND PRIVATE PROPERTY. TEMPORARY EROSION CONTROLS MAY INCLUDE SILT FENCES, ROCK CHECK DAMS, STABILIZED CONSTRUCTION ENTRANCES, STRAW BALES, BERMS, DIKES, SWALES, STRIPS OF UNDISTURBED VEGETATION, CHECK DAMS AND OTHER METHODS AS REQUIRED BY THE CITY ADMINISTRATOR OR HIS REPRESENTATIVE AND SHALL CONFORM TO THE ASTORM WATER QUALITY BEST MANAGEMENT PRACTICES FOR CONSTRUCTION ACTIVITIES© AS PUBLISHED BY THE NORTH CENTRAL TEXAS COUNCIL OF GOVERNMENTS>

9. FINISHED SLOPES ON PUBLIC RIGHTS-OF-WAY AND EASEMENTS SHALL NOT BE STEEPER THAN 4:1. ALL SLOPES STEEPER THAN 6:1 SHALL BE COVERED WITH EROSION CONTROL MATTING AND ARE HYDRO MULCHED AND MAINTAINED BY THE CONTRACTOR UNTIL GRASS COVERS ALL PARTS OF THE SLOPE.

10. THE CONTRACTOR SHALL MAINTAIN TWO-WAY TRAFFIC AT ALL TIMES ALONG THE PROJECT.

11. REMOVE, SALVAGE AND REPLACE ALL STREET AND TRAFFIC CONTROL SIGNS, WHICH MAY BE DAMAGED BY THE CONSTRUCTION OF THE PROJECT.

12. ALL TRENCHING AND EXCAVATION SHALL BE PERFORMED IN ACCORDANCE WITH OSHA STANDARDS.

CITY OF CELINA CONSTRUCTION GENERAL NOTES CONT.:

PAVING

1. ALL EMBANKMENTS SHALL BE COMPACTED TO 95% STANDARD PROCTOR DENSITY.

2. ALL STREETS AND ALLEYS SHALL BE PLACED ON LIME STABILIZED SUB GRADE WITH A LIME CONTENT OF NOT LESS THAN 7%. OR LIME SERIES APPROVED BY CITY ENGINEER.

3. THE MINIMUM 28 DAY COMPRESSIVE STRENGTH OF CONCRETE STREET PAVING SHALL NOT BE LESS THAN 3600 PSI AND SHALL BE AIR ENTRAINED. WATER MAY NOT BE APPLIED TO THE SURFACE OF CONCRETE PAVING TO IMPROVE WORKABILITY.

4. ALL CURB AND GUTTER SHALL BE INTEGRAL WITH THE PAVEMENT.

5. PARABOLIC CROWNS ARE REQUIRED ON ALL STREET PAVEMENTS EXCEPT ON MAJOR THOROUGHFARES WHERE STRAIGHT SECTIONS ARE REQUIRED.

6. STREETS AND ALLEYS SHALL BE CONSTRUCTED WITH PROVISIONS FOR SIDEWALK RAMPS AT ALL INTERSECTIONS.

7. A LIGHTING AND SIGNAGE PLAN MUST ALSO BE SUBMITTED. USE LIGHT POLES AS SIGN POLES WHEN POSSIBLE SEE DETAIL ATTACHED FOR STREET NAME SIGN.

DRAINAGE

1. STORM SEWER PIPE SHALL BE REINFORCED CONCRETE, CLASS III UNLESS OTHERWISE NOTED.

2. ALL STRUCTURAL CONCRETE SHALL BE CLASS "C" (3600 PSI COMPRESSIVE STRENGTH AT 28 DAYS), AIR ENTRAINED.

3. THE CONTRACTOR SHALL INSTALL PLUGS IN STORM SEWER LINES OR OTHERWISE PREVENT MUD FROM ENTERING THE STORM SEWER SYSTEM DURING CONSTRUCTION.

WATER AND SANITARY SEWER

1. WATER MAINS SHALL BE AWWA C-900 OR 905 PVC CLASS 150 UNLESS OTHERWISE NOTED. MINIMUM COVER FOR WATERLINES IS 48" BELOW TOP OF CURB, 60" WHERE NO CURBED STREET IS PRESENT OR AS REQUIRED TO CLEAR EXISTING UTILITIES, WHICHEVER IS GREATER. CLASS B+ EMBEDMENT UNLESS OTHERWISE NOTED.

2. MARKING TAPE SHALL BE INSTALLED ONE FOOT ABOVE AND OVER PVC WATER LINES.

3. FITTINGS FOR PVC WATER LINES SHALL BE DUCTILE IRON AND BE ENCASED IN A POLYETHYLENE SHEATH.

4. ALL MECHANICAL JOINTS WILL BE RESTRAINED. (MEGA-LUG ETC.)

5. VALVES, INCLUDING TAPPING VALVES SHALL BE RESILIENT SEAT GATE VALVES.

6. ALL DIRECT BURIAL VALVES SHALL BE PROVIDED WITH CAST IRON VALVE BOXES WITH PVC STACKS. VALVE STACKS SHALL BE VERTICAL AND CONCENTRIC WITH THE VALVE STEM. STAINLESS STEEL VALVE EXTENSIONS ARE REQUIRED ON ALL VALVES WHERE THE OPERATING NUT IS GREATER THAN 4 FEET BELOW FINISHED GRADE.

7. FIRE HYDRANTS SHALL BE CLOW OR EQUAL AS DIRECTED OR APPROVED BY THE CITY OF CELINA ON A CASE BY CASE BASIS AND FIELD PAINTED SILVER WITH BONNET AND CAPS COLOR-CODED TO PIPE SIZE.
   a. SIX INCH LINE– SILVER BODY WITH RED BONNET AND CAPS.
   b. EIGHT INCH LINE– SILVER BODY WITH BLUE BONNET AND CAPS.
   c. TEN INCH LINE– SILVER BODY WITH GREEN BONNET AND CAPS.
   d. TWELVE INCH AND LARGER– SILVER BODY WITH YELLOW BONNET AND CAPS.

8. ALL EXPOSED BOLTING ON ANY BURIED EQUIPMENT OR MATERIAL SHALL BE STAINLESS STEEL. INCLUDED ARE:
   a. BONNET AND STUFFING BOX BOLTS ON VALVES.
   b. SHOE BOLTS ON FIRE HYDRANTS.
   c. FLANGE BOLTS.
   d. "COR-TEN" MECHANICAL JOINT "T" BOLTS ARE ACCEPTABLE FOR DIRECT BURIAL SERVICE.

9. METER BOXES SHALL BE APPROVED BY THE CITY OF CELINA. PLEASE SEE ATTACHED.

10. SAMPLING STATIONS 1 FOR EVERY 250 CONNECTIONS WILL BE FIELD PLACED DURING CONSTRUCTION.

11. SANITARY SEWER MAINS SHALL BE DR 35 PVC. CLASS H EMBEDMENT UNLESS OTHERWISE NOTED.
   a. THE CONTRACTOR SHALL INSTALL AND MAINTAIN WATERTIGHT PLUGS IN ALL CONNECTIONS TO THE CITY'S SANITARY SEWER SYSTEM UNTIL THE CITY ACCEPTS THE PROJECT.
   b. ALL SANITARY SEWER LINES AND MANHOLES SHALL BE LEAK TESTED BEFORE THE PROJECT IS ACCEPTED. DEFLECTION TESTING OF PVC SEWER LINES IS REQUIRED.

NO.	DATE	REVISION / DESCRIPTION
2	02-22-08	RECORD DRAWINGS
1	10-16-07	TXDOT COMMENTS

DESIGN	DRAWN	DATE	SCALE	NOTES
RPP	BEC	08-24-07	AS SHOWN	–

ARCHITECT
JIM WILSON ARCHITECTS
217 WOOD STREET
McKINNEY, TEXAS 75069
MR. JIM WILSON
(972) 562-9903 PHONE
(972) 547-4111 FAX

PROJECT INFORMATION
INDEPENDENT BANK
BLOCK A, LOT 1, MILLER ADDITION
CELINA, COLLIN COUNTY, TEXAS
J.K. RICE SURVEY, ABSTRACT NO. 767
PROPOSED USE: BANK
ZONING: PRO (PRESTON ROAD OVERLAY)

THE SEAL APPEARING ON THIS DOCUMENT WAS AUTHORIZED BY RANDALL P. POGUE, P.E. 84780 ON 08/24/07. ALTERATION OF A SEALED DOCUMENT WITHOUT PROPER NOTIFICATION TO THE RESPONSIBLE ENGINEER IS AN OFFENSE UNDER THE TEXAS ENGINEERING PRACTICE ACT.

8-24-07

STATE OF TEXAS
RANDALL P. POGUE
84780
LICENSED
PROFESSIONAL ENGINEER

POGUE
ENGINEERING & DEVELOPMENT COMPANY, INC.
1515 HERITAGE DRIVE
SUITE 105
McKINNEY, TEXAS 75069
(214) 544-8880 PHONE
(214) 544-8882 FAX
www.PogueEngineering.com

GENERAL NOTES SHEET

INDEPENDENT BANK
BLOCK A, LOT 1, MILLER ADDITION
J.K. RICE SURVEY, ABSTRACT NO. 767
CITY OF CELINA, TEXAS

SHEET NO.
C7.01

© POGUE ENGINEERING & DEVELOPMENT COMPANY, INC. 2007, ALL RIGHTS RESERVED THE ENGINEERING DESIGN, DETAIL AND ENGINEERING DRAWINGS FOR THIS PROJECT AND/OR OVERALL PROJECT ARE THE LEGAL PROPERTY OF POGUE ENGINEERING & DEVELOPMENT COMPANY, INC. THEIR USE FOR REPRODUCTION, CONSTRUCTION, OR DISTRIBUTION IS PROHIBITED UNLESS AUTHORIZED IN WRITING BY POGUE ENGINEERING & DEVELOPMENT COMPANY, INC.

TWILLIAMS 02/22/2008 – 9:51AM
N:\JOBS\1200-1299\1294-06-065\DWG\1294-06-065-07A.DWG

DISCLAIMER
The use of this standard is governed by the "Texas Engineering Practice Act". No warranty of any kind is made by TxDOT for any purpose whatsoever. TxDOT assumes no responsibility for the conversion of this standard to other formats or for incorrect results or damages resulting from its use.

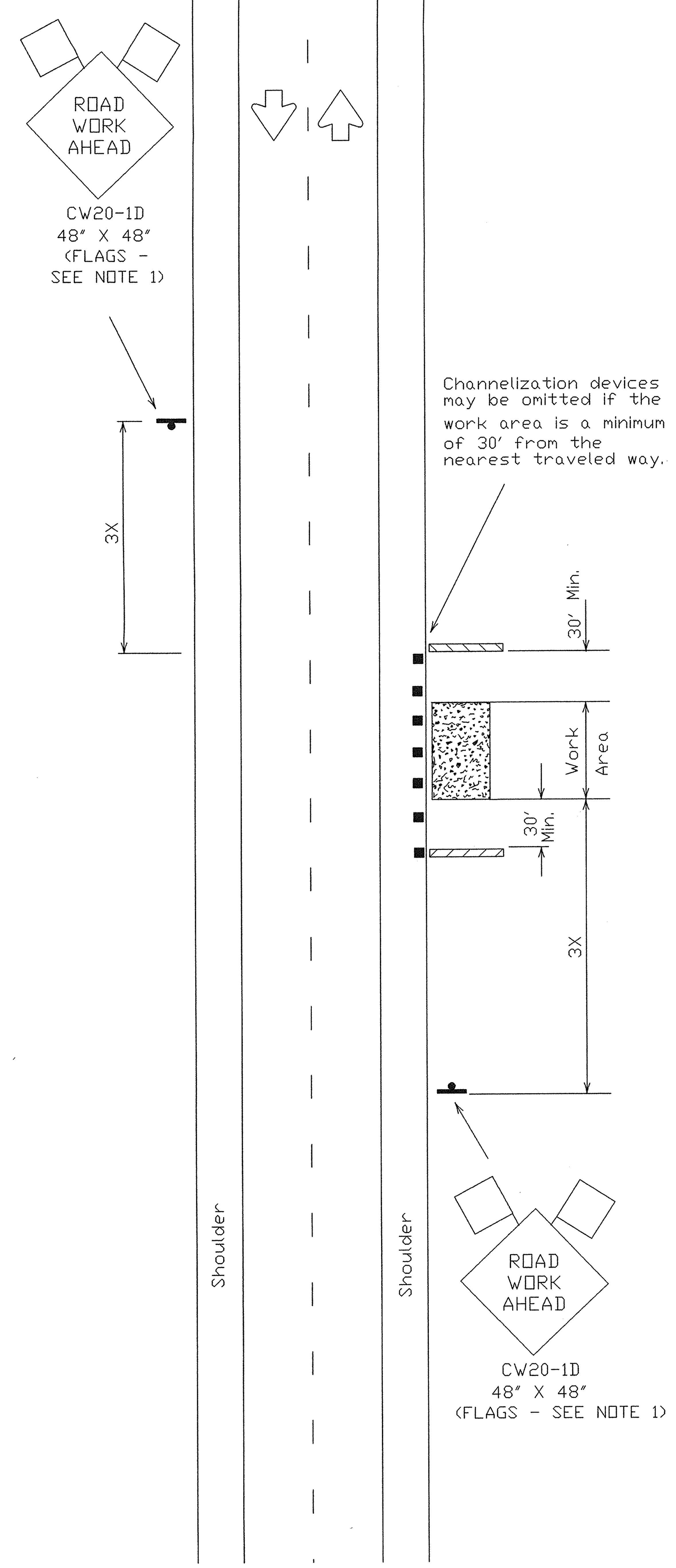

TCP (2-1a)

Work Area Near Shoulder

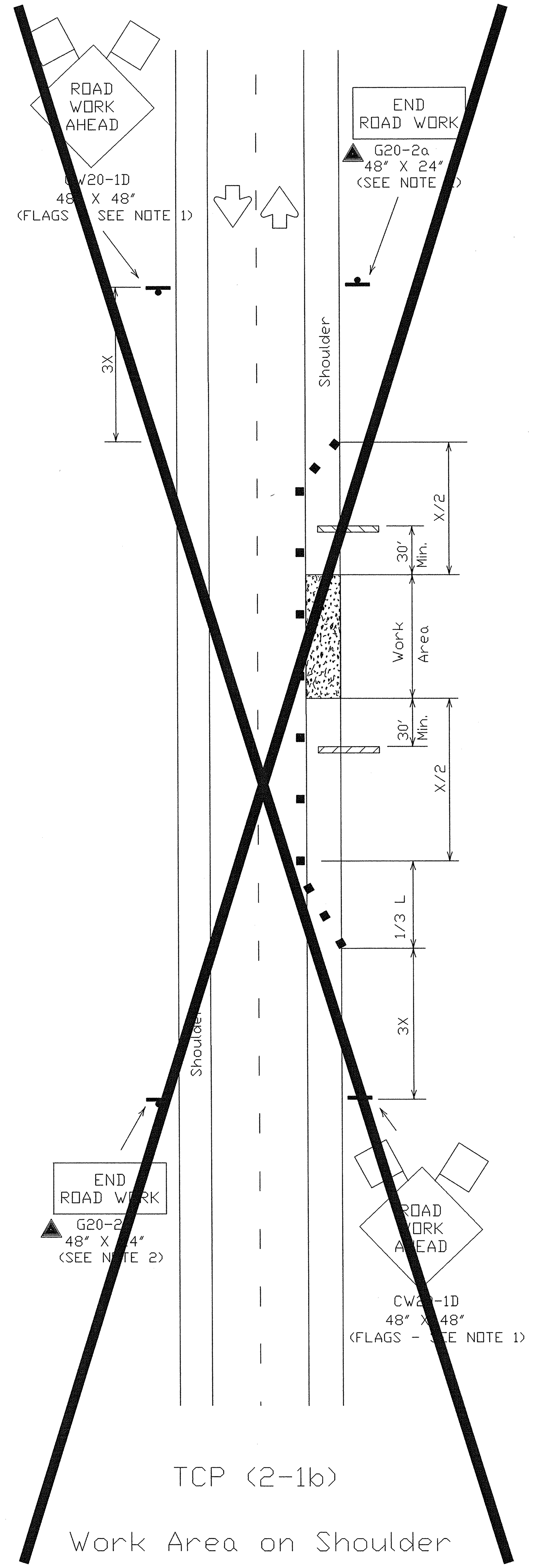

TCP (2-1b)

Work Area on Shoulder

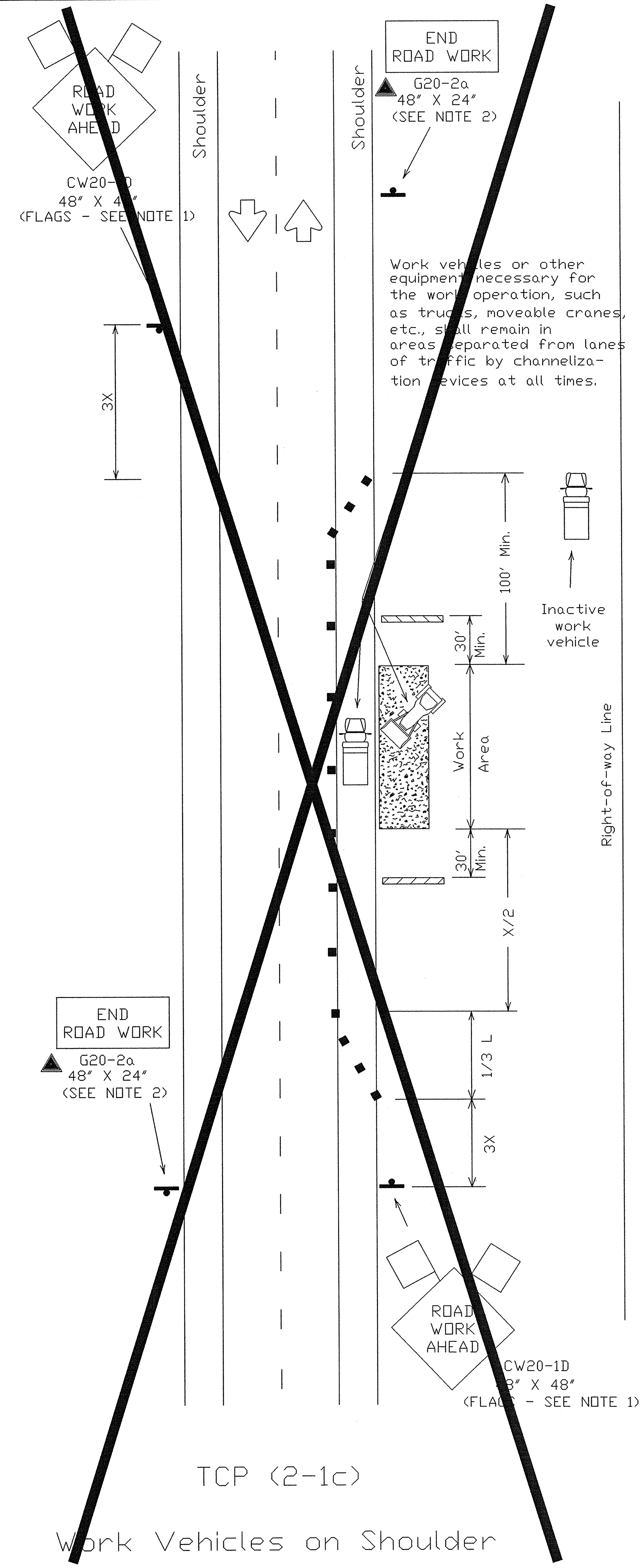

TCP (2-1c)

Work Vehicles on Shoulder

LEGEND

Type III Barricade
Channelizing Devices
Flag
Heavy Work Vehicle
Truck Mounted Attenuator
Trailer Mounted Flashing Arrow Panel
Portable Changeable Message Sign
Flagger
Sign Post

Posted Speed ✳	Formula	Minimum Desirable Taper Lengths ✳✳ 10' Offset	11' Offset	12' Offset	Suggested Maximum Spacing of Device On a Taper	On a Tangent	Minimum Sign Spacing X Distance
30	$L = \frac{WS^2}{60}$	150'	165'	180'	30'	60'-75'	120'
35		205'	225'	245'	35'	70'-90'	160'
40		265'	295'	320'	40'	80'-100'	240'
45	L=WS	450'	495'	540'	45'	90'-110'	320'
50		500'	550'	600'	50'	100'-125'	400'
55		550'	605'	660'	55'	110'-140'	500'
60		600'	660'	720'	60'	120'-150'	✳600'
65		650'	715'	780'	65'	130'-165'	✳700'
70		700'	770'	840'	70'	140'-175'	✳800'

✳ Conventional Roads Only

✳✳ Taper lengths have been rounded off.
L=Length of Taper (FT.) W=Width of Offset (FT.) S=Posted Speed (MPH)

TYPICAL USAGE:				
MOBILE	SHORT DURATION	SHORT TERM STATIONARY	INTERMEDIATE TERM STATIONARY	LONG TERM STATIONARY

GENERAL NOTES:

1. Unless otherwise stated in the plans, flags attached to signs are REQUIRED.
2. All traffic control devices illustrated are REQUIRED, except those denoted with the triangle symbol may be omitted when stated elsewhere in the plans.
3. Type III barricades are required on both sides of work area at all times. (See BC Standards for barricade details.)
4. Stockpiled material should be placed a minimum 30' from nearest traveled way.
5. On high speed facilities advance warning signs should be installed approximately 3X from the work area or from the beginning of a lane or shoulder taper. On low speed facilities the advance warning sign should be placed on the "X" minimum distance.

Only pre-qualified products shall be used. A list of compliant products and their sources may be obtained by writing or faxing:

Standards Engineer
Traffic Operations Division - TE
Texas Department of Transportation
125 East 11th Street
Austin, Texas 78701-2483
Phone (512) 416-3335
Fax (512) 416-3161
E-mail TRF-STANDARD@mailgw.dot.state.tx.us

STANDARD PLANS
TEXAS DEPARTMENT OF TRANSPORTATION
Traffic Operations Division

TRAFFIC CONTROL PLAN

TCP(2-1)-98

	DN: LR	CK: MT	DW: DN	CK: MT	NEG NO.:

REVISIONS	STATE DISTRICT	FEDERAL REGION	FEDERAL AID PROJECT			SHEET
2-94		6				
8-95	COUNTY		CONTROL	SECTION	JOB	HIGHWAY
1-97						
4-98						

C8.01 161

TWILLIAMS 02/22/2008 - 9:52AM
N:\JOBS\1200-1299\1294-06-065\DWG\1294-06-065-07A.DWG

LEVELS DISPLAYED																
1	2	3	4	5	6	7	8	9	10	11	12	13	14	15	16	DATE:
17	18	19	20	21	22	23	24	25	26	27	28	29	30	31	32	ACC:
33	34	35	36	37	38	39	40	41	42	43	44	45	46	47	48	FILE:
49	50	51	52	53	54	55	56	57	58	59	60	61	62	63		

DN:
CK:
DW:
CK:

PI NO: 1294-06-065

DWG NO: 1294-06-065-07A.DWG

P-200708-01

DISCLAIMER
The use of this standard is governed by the "Texas Engineering Practice Act". No warranty of any kind is made by TxDOT for any purpose whatsoever. TxDOT assumes no responsibility for the conversion of this standard to other formats or for incorrect results or damages resulting from its use.

Definition of Responsibilities and Purpose of the Barricade and Construction (BC) Standard Sheets

1. The Barricade and Construction Standard Sheets (BC SHEETS) are intended to show typical examples for placement of traffic control devices, construction pavement markings, and typical construction signs. These sheets alone shall not be used for the Traffic Control Plan (TCP), but may be used to supplement the TCP. The information contained in these sheets meet or exceed the requirements shown in the "Texas Manual on Uniform Traffic Control Devices" (TMUTCD).
2. The BC SHEETS are intended for use by the following groups:
   a. TxDOT Engineers-these sheets provide typical design requirements and guidelines for TCP's, example sign placement locations, information on approved sign supports, reflective sheeting, sign substrates and other approved traffic control devices. An evaluation of field conditions and engineering judgement must be considered when designing and implementing the TCP in the field.
   b. TxDOT Inspectors-these sheets show typical sign placement and guidelines. These sheets provide information on approved traffic control devices and lists responsibilities of TxDOT and Contractor personnel for implementing and maintaining the TCP.
   c. Contractors-these sheets show approved devices and locations the Contractor may install and maintain on the roadway. The BC Sheets serve as a reminder that the Engineer is responsible for the design of the TCP and the Contractor may not alter the TCP without written approval of the Engineer. The Contractor is responsible for implementation of the TCP, including maintaining the traffic control devices.
3. The development and design of the TCP is the responsibility of the Engineer. The Engineer/Designer, when possible, shall ensure lane shifts and detours meet the applicable design criteria contained in the American Association of State Highway and Transportation Officials (AASHTO) "Policy on the Geometric Design of Highways and Streets" or the TxDOT "Roadway Design Manual." The Engineer or his/her assigned responsible person, typically an inspector, has the final decision on the location of all traffic control devices shown in the plans.
4. The Contractor is responsible for installing and maintaining the traffic control devices as shown in the plans. The Contractor may not move or change the location of any device without the approval of the Engineer/Inspector. Any variation in the plans shall be documented by written agreement between the Engineer/Inspector and the Contractor's Responsible Person. All agreed upon changes must be documented in writing before being implemented. This can include documenting the changes in the Inspector's TxDOT diary or a memorandum to the project file.
5. The Engineer/Inspector shall ensure that construction work zone signs are installed with adequate spacing between the signs so the legibility of existing permanent and other work zone signs is not obstructed or compromised. All signs should fulfill a need, command attention, convey a clear and simple message, command respect of the road users and give adequate time for proper response.
6. Additional traffic control devices are needed in advance of the Control-Section-Job (CSJ) limits in those cases where a work area is at or less than 2000 feet inside the CSJ limits. Follow the applicable TCP sheets for exact spacing of signs and channelizing devices placed outside the CSJ limits.
7. The traffic control devices used in the illustrations shown on the BC sheets are examples only. The TxDOT Engineer/Inspector must evaluate field conditions and use their judgement to determine the most appropriate traffic control device to be used. Any variation in the plans shall be documented by written agreement between the Engineer and the Contractor's Responsible Person. All changes must be documented in writing before being implemented. This can include documenting the changes in the Inspector's TxDOT diary or a memorandum to the project file.
8. As shown on BC(2), the OBSERVE WARNING SIGNS STATE LAW, BEGIN ROAD WORK NEXT X MILES, CONTRACTOR and END ROAD WORK signs shall be erected at or near the CSJ limits and the WORK ZONE TRAFFIC FINES DOUBLE sign with plaque shall be erected in advance of the CSJ limits. The Engineer/Inspector should ensure adequate spacing between existing signs.
9. When projects abut, the Engineer(s) may omit the END ROAD WORK, TRAFFIC FINES DOUBLE, and other advance warning signs if the signing would be redundant and the work areas appear continuous to the motorists. If the adjacent project is completed first, the Contractor will erect the necessary warning signs as shown on these sheets, the TCP sheets or as directed by the Engineer. The BEGIN ROAD WORK NEXT X MILES sign shall be revised to show appropriate work zone distance.
10. The Engineer/Inspector may require duplicate construction warning signs on the median side of divided highways where median width will permit and traffic volumes justify the signing.
11. Except for devices required by Note 8, traffic control devices should be in place only while work is actually in progress or a definite need exists.
12. The Engineer/Inspector shall specify the sign size based on the TMUTCD or the table, "Typical Construction Warning Sign Size and Spacing," shown on BC(2).
13. All signs shall be constructed in accordance with the details found in the "Standard Highway Sign Designs for Texas 1980." Sign details not shown in this manual shall be shown in the plans or the Engineer shall provide a detail to the Contractor before the sign is manufactured.
14. After the traffic control devices have been installed, the Engineer/Inspector should drive the work zone area both during the day and after dark to ensure the devices are properly positioned, spaced, legible and are reflective. The Contractor shall be notified of any deficiencies and shall correct the deficiencies within an agreed upon time.

Only pre-qualified products shall be used. A copy of the 'Compliant Work Zone Traffic Control Devices List' (CWZTCD) describes pre-qualified products and their sources and may be obtained by contacting:

Standards Engineer
Traffic Operations Division - TE
Texas Department of Transportation
125 East 11th Street
Austin, Texas 78701-2483
Phone (512) 416-3120
Fax (512) 416-3299

Instructions to locate the 'CWZTCD' on TxDOT website are:

Start at website - www.dot.state.tx.us
Click on 'About TxDOT',
Click on 'Functional Organizational Chart',
Click on Traffic Operations Box,
Click on 'Compliant Work Zone Traffic Control Devices',
again click on 'Compliant Work Zone Traffic Control Devices'.
This site is printable.

STANDARD PLANS
Texas Department of Transportation
Traffic Operations Division

BARRICADE AND CONSTRUCTION GENERAL NOTES AND REQUIREMENTS

1 of 12 BC(1)-03

© TxDOT 11-4-02	DN-BAS	CK-GRB	DW-FDN	CK-CAL

REVISIONS	STATE DISTRICT	FEDERAL REGION	PROJECT NUMBER	SHEET
		6		
	COUNTY	CONTROL	SECTION	JOB	HIGHWAY

C9.01 101

PI NO: 1294-06-065

DWG NO: 1294-06-065-07A.DWG

P-200708-01

LEVELS DISPLAYED ACC:

1	2	3	4	5	6	7	8	9	10	11	12	13	14	15	16
17	18	19	20	21	22	23	24	25	26	27	28	29	30	31	32
33	34	35	36	37	38	39	40	41	42	43	44	45	46	47	48
49	50	51	52	53	54	55	56	57	58	59	60	61	62	63	

TWILLIAMS 02/22/2008 - 8:52AM
N:\ABS\1200-1299\1294-06-065\DWG\1294-06-065-07A.DWG

DISCLAIMER
The use of this standard is governed by the "Texas Engineering Practice Act". No warranty of any kind is made by TxDOT for any purpose whatsoever. TxDOT assumes no responsibility for the conversion of this standard to other formats or for incorrect results or damages resulting from its use.

CLOSED ROADWAY

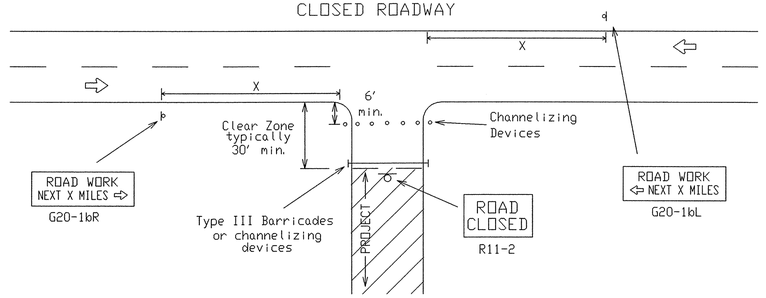

Barricades or channelizing devices shall be erected completely across roadway. Drums, vertical panels or cones shall be used in place of Type III Barricades when shown in plans or as specified by the Engineer.

T-INTERSECTION

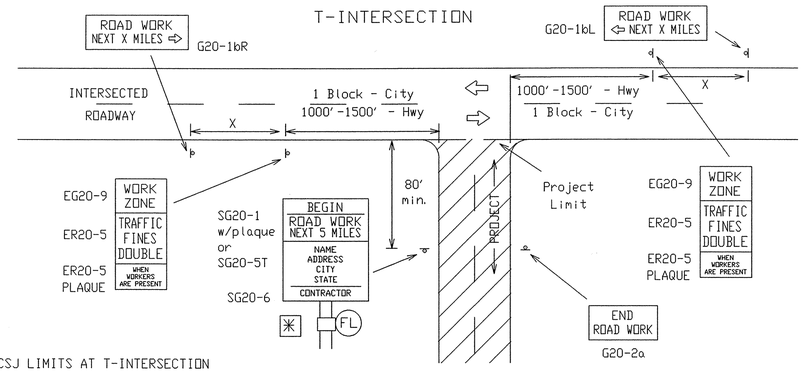

CSJ LIMITS AT T-INTERSECTION

1. A ROAD WORK NEXT X MILES (G20-1bR(L)) sign should be erected on the intersected highway as shown above.
2. The Engineer will determine the types and location of any additional traffic control devices, such as a flagger and accompanying signs, or other signs, that should be used when work is being performed at or near an intersection.
3. The Engineer/Inspector shall ensure that construction work zone signs are installed with adequate spacing between the signs so the legibility of existing permanent and other work zone signs is not obstructed.

TYPICAL LOCATION OF CROSSROAD SIGNS

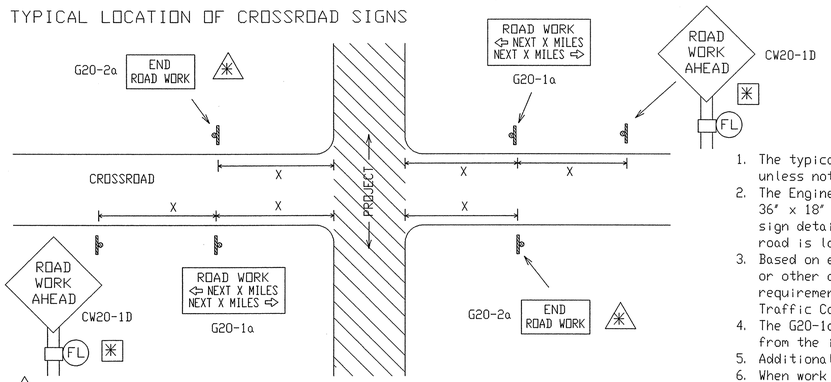

✳ May be mounted on back of CW20-1D sign with approval of engineer. (See note 2 at right)

1. The typical minimum signing on a crossroad approach should be a CW20-1D ROAD WORK AHEAD sign and a G20-2a END ROAD WORK sign, unless noted otherwise in plans.
2. The Engineer may use the reduced size 36" x 36" ROAD WORK AHEAD (MCW20-1D) sign mounted back to back with the reduced size 36" x 18" END ROAD WORK (SG20-2a) sign on low volume crossroads. See the 'Standard Highway Sign Designs for Texas' manual for sign details. The Engineer may omit the advance warning signs on low volume crossroads. The Engineer will determine whether a road is low volume. This information shall be shown in the plans.
3. Based on existing field conditions, the Engineer/Inspector may require additional signs such as FLAGGER AHEAD, LOOSE GRAVEL, or other appropriate signs. When additional signs are required, these signs will be considered part of the minimum requirements. The Engineer/Inspector will determine the proper location and spacing of any sign not shown on the BC sheets, Traffic Control Plan sheets or the Work Zone Standard Sheets.
4. The G20-1a sign shall be required on major crossroads to advise motorists of the length of construction in either direction from the intersection. The Engineer will determine whether a roadway is considered high volume.
5. Additional traffic control devices may be shown elsewhere in the plans for higher volume crossroads.
6. When work occurs in the intersection area, appropriate traffic control devices, as shown elsewhere in the plans or as determined by the Engineer/Inspector, shall be in place.

TYPICAL CONSTRUCTION WARNING SIGN SIZE AND SPACING [1,5,6]

Posted Speed	Sign Spacing △ "X"	Long-term Or Intermediate-term Stationary Approach Warning Signs CW20 and CW21 Series		Short-term Stationary Or Short Duration Approach Warning Signs CW21 Series		Other Warning Signs
MPH	Feet (Apprx.)	Standard inches	Minimum [4] inches	Standard inches [7]	Minimum [4] inches [7]	Standard inches [7]
30	120	48 x 48	36 x 36	30 x 30 or 36 x 36	24 x 24 or 30 x 30	30 x 30 or 36 x 36
35	160					
40	240					
45	320		Use Standard Size		Use Standard Size	
50	400					
55	500 [2]			48 x 48		48 x 48
60	600 [2]					
65	700 [2]					
70	800 [2]					
75	900 [2]					
✳	✳ [3]					

✳ For typical sign spacings on expressways and freeways, see Part VI of the 'Texas Manual on Uniform Traffic Control Devices' (TMUTCD) typical application diagrams or TCP Standard Sheets.

△ Minimum distance from work area to first Advance Warning sign and/or distance between each additional sign.

General Notes:
1. Special or larger size signs may be used as necessary.
2. Distance between signs should be increased as required to have 1500 feet advance warning.
3. Distance between signs should be increased as required to have 1/2 mile or more advance warning.
4. For use only on secondary roads or city streets where speeds are low.
5. Only diamond shaped warning sign sizes are indicated.
6. See sign size listing in 'TMUTCD', Appendix A or the 'Standard Highway Sign Design' manual for complete list of available sign design sizes.
7. Where two sizes are listed, see sign size listing in 'TMUTCD', Appendix A or the 'Standard Highway Sign Design' manual for proper size.

Only pre-qualified products shall be used. A copy of the 'Compliant Work Zone Traffic Control Devices List' (CWZTCD) describes pre-qualified products and their sources and may be obtained by contacting:

Standards Engineer
Traffic Operations Division - TE
Texas Department of Transportation
125 East 11th Street
Austin, Texas 78701-2483
Phone (512) 416-3120
Fax (512) 416-3299

Instructions to locate the 'CWZTCD' on TxDOT website are:

Start at website - www.dot.state.tx.us
Click on 'About TxDOT',
Click on 'Functional Organizational Chart',
Click on Traffic Operations Box,
Click on 'Compliant Work Zone Traffic Control Devices',
again click on 'Compliant Work Zone Traffic Control Devices'.
This site is printable.

TYPICAL SIGNING AND TRAFFIC CONTROL DEVICE DETAILS FOR WORK BEGINNING AT THE CSJ LIMITS

(Less than 2000 feet between project limits and work area) (Typical signing shall be installed at all CSJ Limits)

TYPICAL DETAILS FOR WORK AREAS IN VARIOUS LOCATION WITHIN CSJ LIMITS

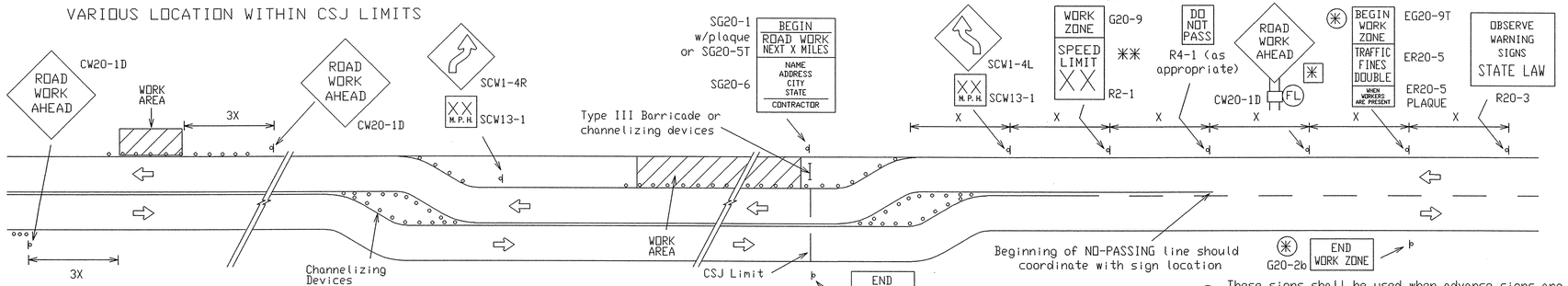

When extended distances occur between minimal work areas, the Engineer/Inspector should ensure additional Road Work Ahead (CW20-1D) signs are placed in advance of these work areas to remind drivers they are still within the project limits. See the applicable TCP sheets for exact location and spacing of signs and channelizing devices.

** For additional information on the placement of work zone speed limit signs, refer to BC(3)

✳ These signs shall be used when advance signs are required outside the CSJ Limits. They inform the motorist of entering or leaving a work zone where traffic fines may double if workers are present.

TYPICAL DETAIL FOR PROJECT LIMIT AWAY FROM WORK AREA

(Greater than 2000 feet between project limits and work area) (Typical signing shall be installed at all CSJ Limits)

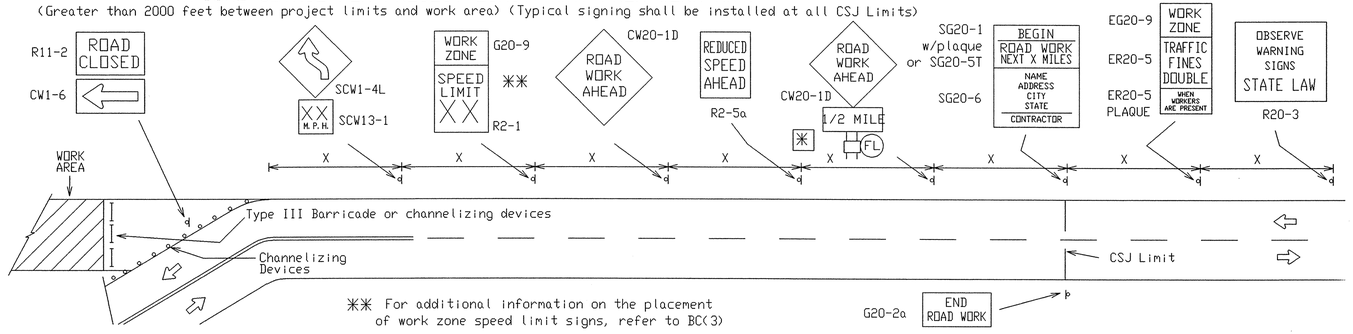

** For additional information on the placement of work zone speed limit signs, refer to BC(3)

LEGEND

- Sign
- (FL) Flashing Type A-Low Intensity Warning Light
- ○ ○ Channelizing Devices
- I Type III Barricade
- ✳ The Type A Warning Lights shall not be used with signs manufactured with Type E Sheeting (Fluorescent Prismatic) meeting the requirements of Departmental Material Specification DMS-8300.
- X See Typical Construction Warning Sign Size and Spacing chart or the TMUTCD for sign spacing requirements.

STANDARD PLANS
Texas Department of Transportation
Traffic Operations Division

BARRICADE AND CONSTRUCTION PROJECT LIMIT STANDARD

2 of 12 BC(2)-03

© TxDOT 11-4-02	DN-BAS	CK-GRB	DW-FDN	CK-CAL
REVISIONS	STATE DISTRICT	FEDERAL REGION	FEDERAL AID PROJECT	SHEET
		6		
	COUNTY	CONTROL	SECTION	JOB	HIGHWAY

C9,02 102

PI NO: 1294-06-065

DWG NO. 1294-06-065-07A.DWG
P-200708-01

TWILLIAMS 02/22/2008 - 9:52AM
N:\JOBS\1200-1299\1294-06-065\DWG\1294-06-065-07A.DWG

LEVELS DISPLAYED
1 2 3 4 5 6 7 8 9 10 11 12 13 14 15 16 17 18 19 20 21 22 23 24 25 26 27 28 29 30 31 32 33 34 35 36 37 38 39 40 41 42 43 44 45 46 47 48 49 50 51 52 53 54 55 56 57 58 59 60 61 62 63 64
ACC:

TYPICAL APPLICATION OF WORK ZONE SPEED LIMIT SIGNS

Work zone speed limits shall be regulatory, established in accordance with the "Procedures for Establishing Speed Zones," and approved by the Texas Transportation Commission.

Reduced speeds should only be posted in the vicinity of work activity and not throughout the entire project.

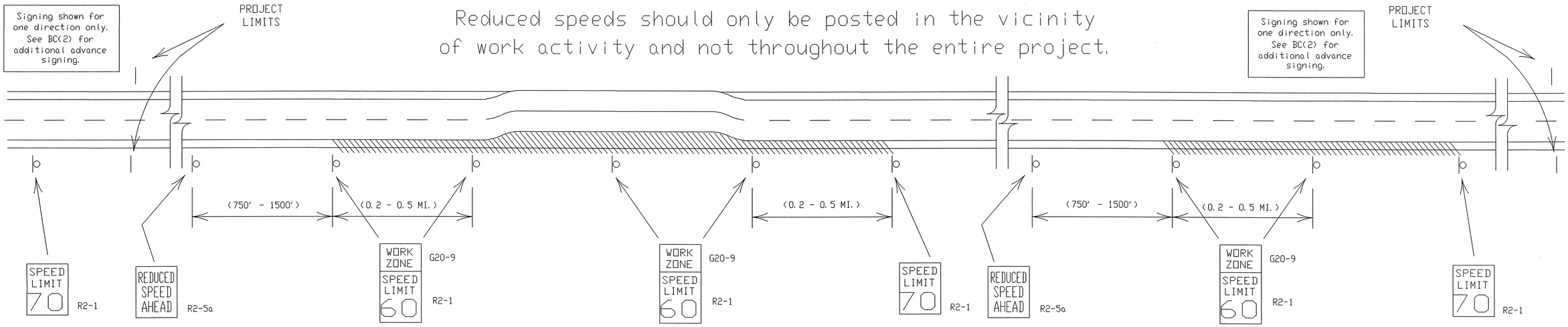

GUIDANCE FOR USE:

LONG/INTERMEDIATE TERM WORK ZONE SPEED LIMITS

This type of work zone speed limit should be included on the design of the traffic control plans when restricted geometrics with a lower design speed are present in the work zone and modification of the geometrics to a higher design speed is not feasible.

LONG/INTERMEDIATE TERM WORK ZONE SPEED LIMIT signs should be posted and visible to the motorists at all times. Work activity in the area of reduced speed zone should be greater than 12 consecutive hours per day. Work activity may also be defined as a change in the roadway that requires a reduced speed for motorists to safely negotiate the work area, including:

a) rough road or damaged pavement surface
b) substantial alteration of roadway geometrics (diversions)
c) construction detours
d) grade
e) width
f) other conditions readily apparent to the driver

As long as any of these conditions exist, the work zone speed limit signs should remain in place.

SHORT TERM WORK ZONE SPEED LIMITS

This type of work zone speed limit should be included on the design of the traffic control plans when workers or equipment are not behind concrete barrier, work activity is within 15 feet of pavement edge or actually on the pavement.

SHORT TERM WORK ZONE SPEED LIMIT signs should be posted and visible to the motorists only when work activity is present. Work activity in the area of reduced speed should be less than 12 consecutive hours. When work activity is not present, signs should be covered with an approved sign cover or removed from work area.

GENERAL NOTES:

1. Regulatory work zone speed limits should be used only for sections of construction projects where speed control is of major importance.
   Regulatory work zone speed signs (R2-1) should be removed during periods when they are not needed to minimize interference with traffic.
2. Regulatory work zone speed limit signs shall be placed on fixed supports at a 7 foot mounting height.
3. Speed zone signs are illustrated for one direction of travel and are normally posted for each direction of travel.
4. Frequency of speed limit signs should be:
   40 mph and greater 0.2 to 2 miles
   35 mph and less 0.2 to 1 mile
5. Regulatory speed limit signs shall have black legend and border on a white reflective background.
6. Fabrication, errection and maintenance of REDUCED SPEED AHEAD sign, WORK ZONE plaque and SPEED LIMIT signs shall not be paid for directly, but shall be considered subsidiary to Item 502.
7. Turning signs from view, laying signs over or down will not be allowed, unless otherwise noted.
8. Techniques that may help reduce traffic speeds.
   (In order of effectiveness.)
   A. Flagger stationed next to sign.
   B. Law enforcement.
   C. Portable changeable message sign (PCMS).
   D. Low-power radar transmitter.
9. Refer to "Work Zone Speed Limit Work Sheets 1 and 2" to determine when a construction speed zone should be required.

DISCLAIMER
The use of this standard is governed by the "Texas Engineering Practice Act". No warranty of any kind is made by TxDOT for any purpose whatsoever. TxDOT assumes no responsibility for the conversion of this standard to other formats or for incorrect results or damages resulting from its use.

LEVELS DISPLAYED

	1	2	3	4	5	6	7	8	9	10	11	12	13	14	15	16
17	18	19	20	21	22	23	24	25	26	27	28	29	30	31	32	
33	34	35	36	37	38	39	40	41	42	43	44	45	46	47	48	
49	50	51	52	53	54	55	56	57	58	59	60	61	62	63		

ACC:

STANDARD PLANS
Texas Department of Transportation
Traffic Operations Division

BARRICADE AND CONSTRUCTION WORK ZONE SPEED LIMIT STANDARD

3 of 12 BC(3)-03

© TxDOT 11-4-02

DN - JWT	CK - GRB	DW - FDN	CK - CAL

REVISIONS	STATE DISTRICT	FEDERAL REGION	FEDERAL AID PROJECT	SHEET
		6		
	COUNTY	CONTROL	SECTION	JOB	HIGHWAY

C9.03 103

PI NO: 1294-06-065

DWG NO: 1294-06-065-07A.DWG

P-200708-01

TWILLIAMS 02/22/2008 - 9:52AM
N:\JOBS\1200-1299\1294-06-065\DWG\1294-06-065-07A.DWG

DISCLAIMER
The use of this standard is governed by the "Texas Engineering Practice Act". No warranty of any kind is made by TxDOT for any purpose whatsoever. TxDOT assumes no responsibility for the conversion of this standard to other formats or for incorrect results or damages resulting from its use.

TYPICAL MINIMUM CLEARANCES FOR LONG TERM AND INTERMEDIATE TERM SIGNS

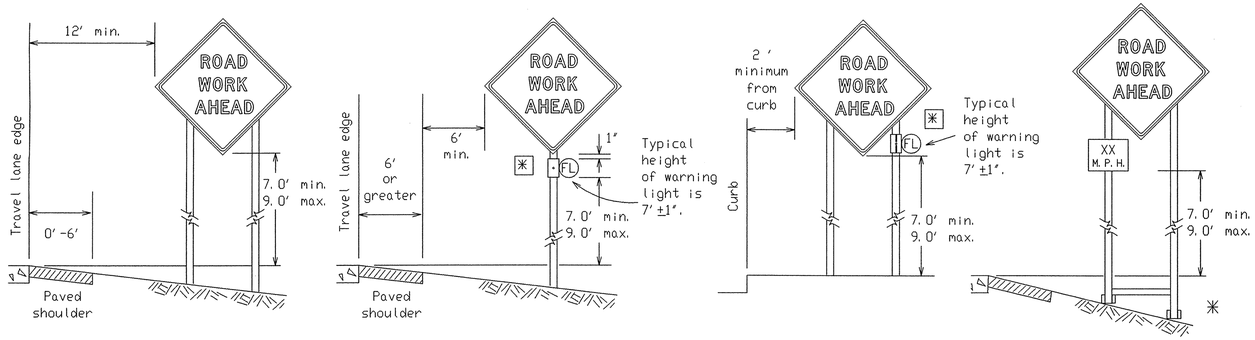

It is the intent of these plans to provide positive guidance to motorists throughout the project limits by the use of signs, pavement markings, delineation and/or channelizing devices. All traffic control devices shall conform with the 'Texas Manual on Uniform Traffic Control Devices for Streets and Highways' (TMUTCD) and the 'Compliant Work Zone Traffic Control Devices List' list (CWZTCD).

✳When placing skid supports on unlevel ground, the leg post lengths must be adjusted so the sign appears straight and plumb. Objects shall NOT be placed under skids as a means of leveling.

ATTACHMENT FOR WOODEN SIGN SUPPORTS

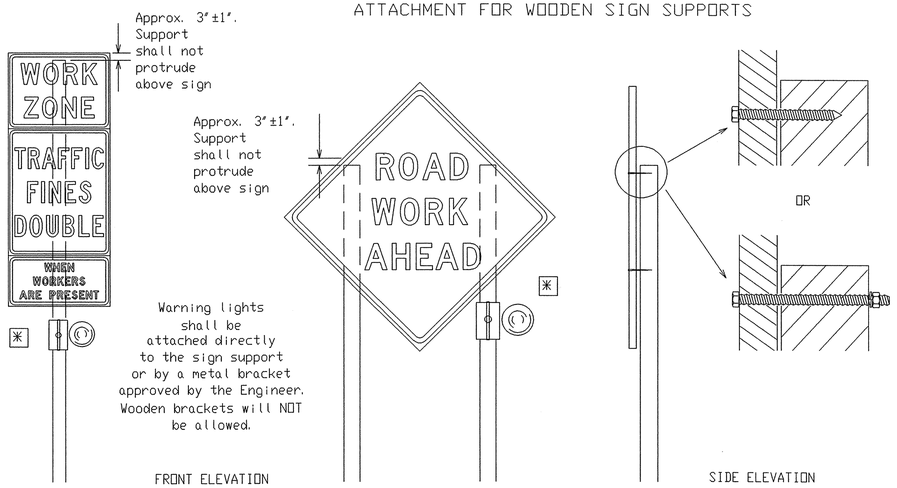

Attachment to wooden supports will be by bolts and nuts or screws. Use TxDOT's or manufacturer's recommended procedures for attaching sign substrates to other types of sign supports

Nails will NOT be allowed.

Each sign shall be attached directly to the sign support. Multiple signs shall not be joined or spliced by any means. Supports shall not be extended or repaired by splicing or other means.

Only pre-qualified products shall be used. A copy of the 'Compliant Work Zone Traffic Control Devices List' (CWZTCD) describes pre-qualified products and their sources and may be obtained by contacting:

Standards Engineer
Traffic Operations Division - TE
Texas Department of Transportation
125 East 11th Street
Austin, Texas 78701-2483
Phone (512) 416-3120
Fax (512) 416-3299

Instructions to locate the 'CWZTCD' on TxDOT website are:

Start at website - www.dot.state.tx.us
Click on 'About TxDOT',
Click on 'Functional Organizational Chart',
Click on Traffic Operations Box,
Click on 'Compliant Work Zone Traffic Control Devices',
again click on 'Compliant Work Zone Traffic Control Devices'.
This site is printable.

(FL) Flashing Type A - Low Intensity Warning Light

✳ The Type A Warning lights shall not be used with Type E Sheeting (Fluorescent Prismatic) meeting the requirements of DMS-8300.

CONTRACTOR REQUIREMENTS FOR MAINTAINING PERMANENT SIGNS WITHIN THE PROJECT LIMITS

1. Permanent signs are used to give notice of traffic laws or regulations, call attention to conditions that are potentially hazardous to traffic operations, show route designations, destinations, directions, distances, services, points of interest, and other geographical, recreational, or cultural information. Drivers proceeding through a work zone need the same, if not better route guidance as normally installed on a roadway without construction.
2. When permanent regulatory or warning signs conflict with work zone conditions, remove or cover the permanent signs until the permanent sign message matches the roadway condition.
3. When existing permanent signs are moved and relocated due to construction purposes, they shall be visible to motorists at all times.
4. If existing signs are to be relocated on their original supports, they shall be installed on crashworthy bases as shown on the SMD Standard sheets. The signs shall meet the required mounting heights shown on the BC Sheets or the SMD Standards. This work should be paid for under the appropriate pay item for relocating existing signs.
5. If permanent signs are to be removed and relocated using temporary supports, the Contractor shall use crashworthy supports as shown on the BC sheets or the CWZTCD. The signs shall meet the required mounting heights shown on the BC Sheets or the SMD Standards during construction. This work should be paid for under the appropriate pay item for relocating existing signs.
6. Any sign or traffic control device that is struck or damaged by the Contractor or his/her construction equipment shall be replaced as soon as possible by the Contractor to ensure proper guidance for the motorists. This will be subsidiary to Item 502.

GENERAL NOTES FOR WORK ZONE SIGNS

1. Contractor shall install and maintain signs in a straight and plumb condition and/or as directed by the Engineer.
2. Wooden sign posts shall be painted white.
3. Barricades shall NOT be used as sign supports.
4. Nails shall NOT be used to attach signs to any support.
5. All signs shall be installed in accordance with the plans or as directed by the Engineer. Signs shall be used to regulate, warn, and guide the traveling public safely through the work zone.
6. The Contractor may furnish either the sign design shown in the plans or in the 'Standard Highway Sign Designs for Texas' (SHSD). The Engineer/Inspector may require the Contractor to furnish other work zone signs that are shown in the TMUTCD but may have been omitted from the plans. Any variation in the plans shall be documented by written agreement between the Engineer and the Contractor's Responsible Person. All changes must be documented in writing before being implemented. This can include documenting the changes in the Inspector's TxDOT diary and having both the Inspector and Contractor initial and date the agreed upon changes. The additional signs requested by the Engineer/Inspector shall not be subsidiary.
7. The Contractor shall furnish sign supports listed in the 'Compliant Work Zone Traffic Control Device List' (CWZTCD). The Contractor shall install the sign support in accordance with the manufacturer's recommendations. If there is a question regarding installation procedures, the Contractor shall furnish the Engineer a copy of the manufacturer's installation recommendations so that the Engineer can verify the correct procedures are being followed.
8. The contractor is responsible for sign installations and replacing signs with damaged or cracked substrates and/or damaged or marred reflective sheeting as directed by the Engineer/Inspector.
9. Identification markings may be shown only on the back of the sign substrate. The maximum height of letters and/or company logos used for identification shall be 1'.
10. The Contractor shall replace damaged wood posts. New or damaged wood sign posts shall not be spliced.

Duration of Work (as defined by the 'Texas Manual on Uniform Traffic Control Devices' Part VI)

1. The types of sign supports, the size of signs, and the type of sign substrates can vary based on the type of work being performed. The Engineer is responsible for selecting the appropriate size sign for the type of work being performed. The Contractor is responsible for ensuring that the sign support and substrate meets crashworthiness and length of work requirements.
   a. Long-term stationary - work that occupies a location more than 3 days.
   b. Intermediate-term stationary - work that occupies a location from overnight to 3 days.
   c. Short-term stationary - daytime work that occupies a location from 1 to 12 hours.
   d. Short, duration - work that occupies a location up to 1 hour.
   e. Mobile - work that moves intermittently or continuously. Does not stop for more than 15 minutes at a time.

SIGN MOUNTING HEIGHT

1. The bottom of Long-term/Intermediate-term signs shall be at least 7 feet, but not more than 9 feet, above the paved surface.
2. The bottom of Short-term/Short Duration signs shall be a minimum of 1 foot above the pavement surface but no more than 2 feet above the ground.
3. Long-term/Intermediate-term Signs may be used in lieu of Short-term/Short Duration signing.
4. Short-term/Short Duration signs shall be used only during daylight and shall be removed at the end of the workday.
5. Regulatory signs shall be mounted at least 7 feet, but not more than 9.0 feet, above the paved surface regardless of work duration.

SIZE OF SIGNS

1. The Engineer may allow the use of smaller size construction warning signs on secondary roads or city streets where speeds are low if the sign size is listed as an option on the 'Typical Construction Warning Sign Size and Spacing' chart shown on BC(2).
2. The Contractor shall furnish the sign sizes shown in plans, the BC Sheets, the TCP sheets or as directed by the Engineer.

SIGN SUBSTRATES

1. The Contractor shall ensure that the sign substrate is allowed for the type of sign support that is being used. The CWZTCD lists each substrate that can be used on the different types and models of sign supports.
2. 'Mesh' type materials are NOT an approved sign substrate.
3. All wooden individual sign panels fabricated from 2 or more pieces shall have one or more plywood cleat, 1/2" thick by 6" wide, fastened to the back of the sign and extending fully across the sign. The cleat shall be attached to the back of the sign using wood screws that do not penetrate the face of the sign panel. The screws shall be placed on both sides of the splice and spaced at 6" centers. The Engineer may approve other methods of splicing the sign faces.

REFLECTIVE SHEETING

1. Reflectorized signs shall be constructed of sheeting meeting the color and retro-reflectivity requirements of DMS-8300 or DMS-8310. The DMS specifications can be accessed from the following web address:
   http://manuals.dot.state.tx.us:80/dynaweb/colmates/dms/@Generic_BookView
2. White sheeting, meeting the requirements of DMS-8300 Type C (High Specific Intensity), shall be used for signs with white background and channelizing devices.
3. Orange sheeting, meeting the requirements of DMS-8300 Type E (Fluorescent Prismatic), shall be used for signs with orange backgrounds.

SIGN LETTERS

1. All sign letters and numbers shall be clear, and open rounded type uppercase alphabet letters as approved by the Federal Highway Administration (FHWA) and as published in the 'Standard Highway Sign Design for Texas' manual. Signs, letters and numbers shall be of first class workmanship in accordance with Department Standards and Specifications.

REMOVING OR COVERING

1. When sign messages may be confusing or do not apply, the signs shall be removed or completely covered.
2. Long-term stationary or intermediate stationary signs installed on square metal tubing may be turned away from traffic 90 degrees when the sign message is not applicable. This type of sign support meets the crashworthiness standards regardless of the direction of impact. This technique may not be used for signs installed in the median of divided highways or near any intersections where the sign may be seen from approaching traffic.
3. Signs installed on skids shall not be turned at 90 degree angles to the roadway. These signs should be removed or completely covered when not required.
4. When signs are covered, the material used shall be opaque, such as heavy mil black plastic.
5. Burlap shall NOT be used to cover signs.
6. Duct tape or other adhesive material shall NOT be affixed to a sign face. These materials can damage the retroreflectivity of sign sheeting.
7. Signs shall be removed upon completion of the work.

SIGN SUPPORT WEIGHTS

1. Where sign supports require the use of weights to keep from turning over, the use of sandbags with dry, cohesionless sand is recommended.
2. The sandbags will be tied shut to keep the sand from spilling and to maintain a constant weight.
3. Rock, concrete, iron, steel or other solid objects will not be permitted for use as sign support weights.
4. Sandbags should weigh a minimum of 35 lbs and a maximum of 50 lbs.
5. Sandbags shall be made of a durable material that tears upon vehicular impact.
6. Rubber (such as tire inner tubes) shall NOT be used for sandbags.
7. Rubber ballasts (such as those used with cones or edgeline channelizers) shall NOT be used as sign support weights.
8. Sandbags shall only be placed along or laid over the base supports of the traffic control device and shall not be suspended above ground level or hung with rope, wire, chains or other fasteners. Sandbags shall be placed along the length of the skids to weigh down the sign support.
9. Sandbags shall NOT be placed under the skid and shall not be used to level sign supports placed on slopes.

STANDARD PLANS
Texas Department of Transportation
Traffic Operations Division

BARRICADE AND CONSTRUCTION TEMPORARY SIGN NOTES STANDARD

4 of 12 BC(4)-03

© TxDOT 11-4-02	DN-BAS	CK-GRB	DW-FDN	CK-CAL
REVISIONS	STATE DISTRICT	FEDERAL REGION	FEDERAL AID PROJECT	SHEET
		6		
COUNTY		CONTROL	SECTION	JOB	HIGHWAY

C9.04 104

PI NO: 1294-06-065

DWG NO: 1294-06-065-07A.DWG

P-200708-01

TWILLIAMS 02/22/2008 - 9:53AM
N:\OBS\1200-1299\1294-06-065\DWG\1294-06-065-07A.DWG

LEVELS DISPLAYED
1 2 3 4 5 6 7 8 9 10 11 12 13 14 15 16
17 18 19 20 21 22 23 24 25 26 27 28 29 30 31 32
33 34 35 36 37 38 39 40 41 42 43 44 45 46 47 48
49 50 51 52 53 54 55 56 57 58 59 60 61 62 63

ACC:

DISCLAIMER
The use of this standard is governed by the "Texas Engineering Practice Act". No warranty of any kind is made by TxDOT for any purpose whatsoever. TxDOT assumes no responsibility for the conversion of this standard to other formats or for incorrect results or damages resulting from its use.

EXAMPLES OF SKID MOUNTED SIGN SUPPORTS

LONG/INTERMEDIATE TERM STATIONARY - PORTABLE SKID MOUNTED SIGN SUPPORTS □

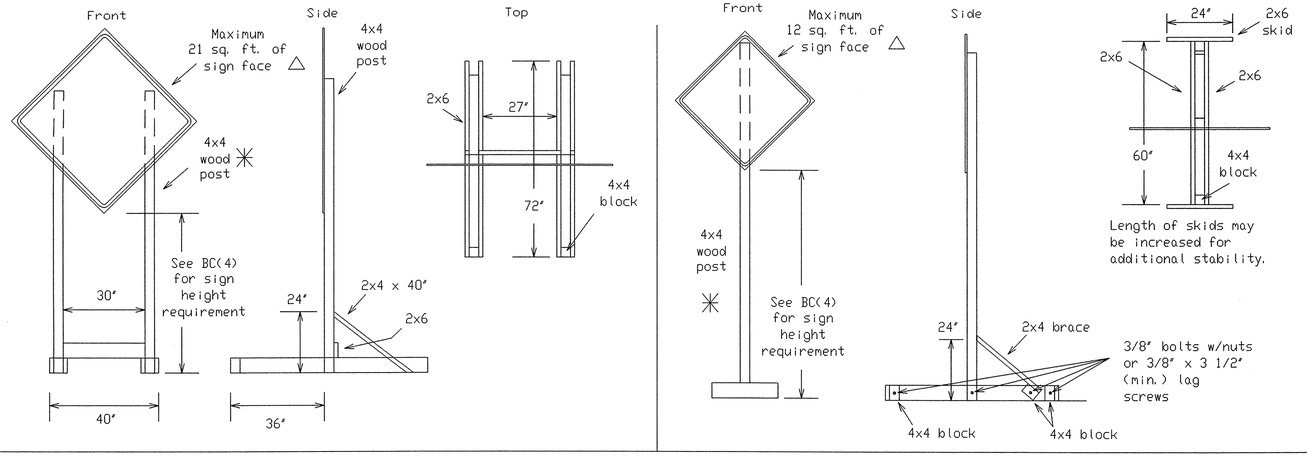

SHORT TERM STATIONARY/SHORT DURATION - PORTABLE SIGN SUPPORTS □

For Daytime use only.
1 Foot Mounting Height

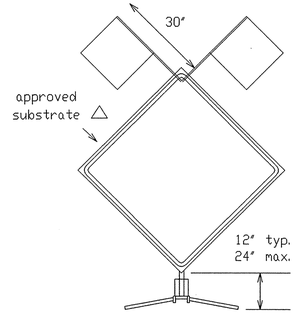

Flags as required by Engineer or as shown on plans

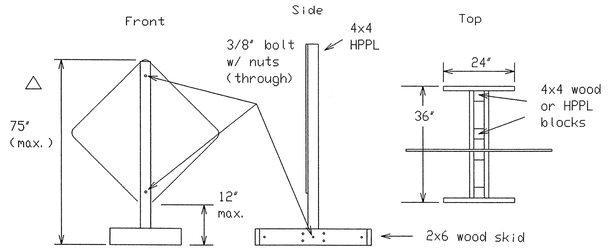

The upright SHALL be made of hollow-profile plastic lumber (HPPL). Wood or metal shall NOT be used.

EXAMPLES OF GROUND MOUNTED SIGN SUPPORTS

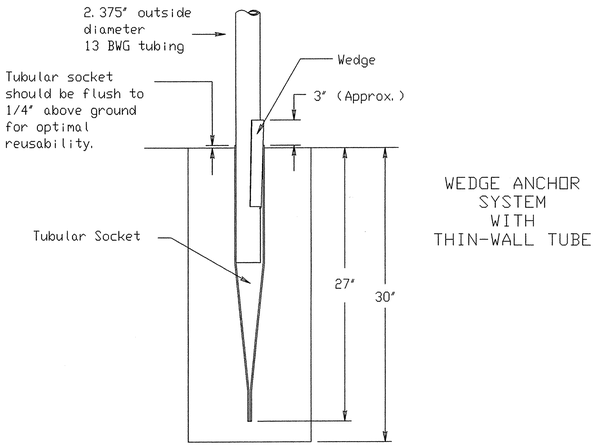

WEDGE ANCHOR SYSTEM WITH THIN-WALL TUBE

The wedge anchor system with thin wall tubing may be used to support up to 10 sq. ft. of sign area.

Where solid rock is encountered at ground level, the foundation shall be a minimum depth of 18 inches. When solid rock is encountered below ground level, the foundation shall extend in the solid rock a minimum depth of 18 inches or provide a minimum foundation depth of 30 inches. If solid rock is encountered, the socket/stub may be reduced in length as required to a min. length of 18 inches. Any material removed from the socket/stub shall be from the bottom and the clearance requirements shown above must still be adhered to. The inner surfaces of the socket/stub must remain free of debris.
Install Wedge Anchor System per manufacturer recommendations.
Attach the sign to the sign post.
Insert the sign post into the socket and align the sign face with the roadway.
Drive the wedge into the socket to secure post. This will leave approximately 3 inches of the wedge exposed.

Supports shall be straight within 1/4 inch per 5 feet of length and shall have a smooth, uniform finish free from defects affecting strength or appearance. Any bolt holes and sheared ends shall be free from burrs.

WING CHANNEL

Lap-splice/base bolted anchor

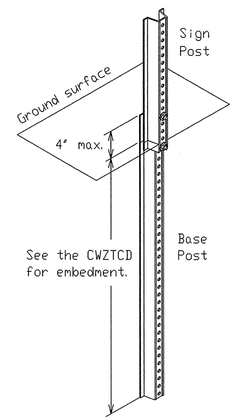

PERFORATED SQUARE METAL TUBING

With Anchor

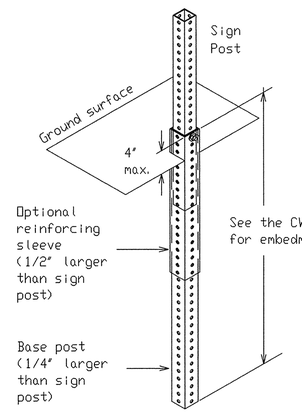

Refer to the CWZTCD and the manufacturer's installation procedure for each type sign support.
The maximum sign square footage shall adhere to the manufacturer's recommendation. Two post installations can be used for larger signs.

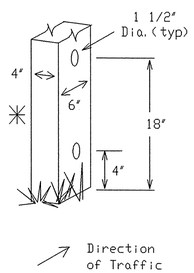

WOOD POST SYSTEM FOR GROUND MOUNTED SIGN SUPPORTS

Nominal Post Size	No. of Posts	Maximum Sq. feet of Sign Face	Minimum Soil Embedment	Drilled Hole(s) Required
4 x 4	1	12	36″	NO
4 x 4	2	21	36″	NO
4 x 6	1	21	36″	YES
4 x 6	2	36	36″	YES

No more than 2 sign posts shall be mounted within a 7 ft. circle.

When project is completed, all sign supports and foundations shall be removed from the project site. This will be considered subsidiary to Item 502.

□ See BC(4) for definition of "Work Duration."

✳ Sign posts MUST be one piece. Splicing will NOT be allowed. Posts shall be painted white.

△ See the CWZTCD for the type of sign substrate that can be used for each approved sign support.

Only pre-qualified products shall be used. A copy of the "Compliant Work Zone Traffic Control Devices List" (CWZTCD) describes pre-qualified products and their sources and may be obtained by contacting:

Standards Engineer
Traffic Operations Division - TE
Texas Department of Transportation
125 East 11th Street
Austin, Texas 78701-2483
Phone (512) 416-3120
Fax (512) 416-3299

Instructions to locate the "CWZTCD" on TxDOT website are:

Start at website - www.dot.state.tx.us
Click on "About TxDOT",
Click on "Functional Organizational Chart",
Click on Traffic Operations Box,
Click on "Compliant Work Zone Traffic Control Devices",
again click on "Compliant Work Zone Traffic Control Devices".
This site is printable.

STANDARD PLANS
Texas Department of Transportation
Traffic Operations Division

BARRICADE AND CONSTRUCTION TYPICAL SIGN SUPPORT STANDARD

5 of 12 BC(5)-03

©TxDOT 11-4-02	DN-JWT	CK-GRB	DW-FDN	CK-CAL

REVISIONS	STATE DISTRICT	FEDERAL REGION	FEDERAL AID PROJECT	SHEET
		6		
	COUNTY	CONTROL	SECTION	JOB	HIGHWAY

C9.05 105

PI NO: 1294-06-065

DWG NO: 1294-06-065-07A.DWG
P-200708-01

LEVELS DISPLAYED
1 2 3 4 5 6 7 8 9 10 11 12 13 14 15 16
17 18 19 20 21 22 23 24 25 26 27 28 29 30 31 32
33 34 35 36 37 38 39 40 41 42 43 44 45 46 47 48
49 50 51 52 53 54 55 56 57 58 59 60 61 62 63

ACC:

TWILLIAMS 02/22/2008 - 8:53AM
N:\JOBS\200-1299\1294-06-065\DWG\1294-06-065-07A.DWG

DISCLAIMER
The use of this standard is governed by the "Texas Engineering Practice Act". No warranty of any kind is made by TxDOT for any purpose whatsoever. TxDOT assumes no responsibility for the conversion of this standard to other formats or for incorrect results or damages resulting from its use.

PORTABLE CHANGEABLE MESSAGE SIGNS

1. The Engineer/Inspector shall approve all messages used on portable changeable message signs (PCMS).
2. PCMS placed on the shoulder or within the R-O-W, but are not behind a concrete traffic barrier shall have a minimum of four plastic drums placed perpendicular to traffic, on the upstream side of the PCMS.
3. Messages on PCMS should contain no more than 8 words (four to eight characters per word), not including simple words such as "TO," "FOR," "AT," etc.
4. Messages should consist of a single phase, or two phases that alternate. Three-phase messages are not allowed.
5. Each phase of the message should convey a single thought.
6. Use the word "EXIT" to refer to an exit ramp on a freeway; i.e., "EXIT CLOSED." Do not use the term "RAMP."
7. Always use the route or interstate designation (IH, US, SH, FM) along with the number when referring to a roadway.
8. Specify the actual days of the week; e.g., TUES THROUGH FRI or TUES-FRI in the coming week that work activity will occur.
9. The message term "WEEKEND" should be used only if the work is to start on Saturday morning and end by Sunday evening at midnight. Actual days and hours of work should be displayed on the PCMS if work is to begin on Friday evening and/or continue into Monday morning.
10. The Engineer/Inspector may select one of two options which are available for displaying a two-phase message on a PCMS. Each phase may be displayed for either four seconds each or for two seconds each.
11. Do not "flash" messages or words included in a message. The message should be steady burn or continuous while displayed.
12. Do not present redundant information on a two-phase message; i.e., keeping two lines of the message the same and changing the third line.
13. Do not use the words "Danger" or "Caution" in message.
14. Do not display the message "LANES SHIFT LEFT" or "LANES SHIFT RIGHT" on a PCMS. Drivers do not understand the message.
15. Do not display messages that scroll horizontally or vertically across the face of the sign.
16. The following table lists abbreviated words and two-word phrases that are acceptable for use on a PCMS. Both words in a phrase must be displayed together. Words or phrases not on this list should not be abbreviated.

Word or Phrase	Abbreviation	Word or Phrase	Abbreviation
Access Road	ACCES RD	Miles	MI
Air Quality	AIR QLTY	Miles Per Hour	MPH
Avenue	AVE	Time Minutes	Time MIN
Best Route	BEST RTE	Monday	MON
Boulevard	BLVD	Normal	NORM
Bridge	BRDG	North	N
Cannot	CANT	Parking	PKING
Center	CNTR	Parking Lot	PRK LOT
Construction Ahead	CONST AHEAD	Road	RD
Detour Route	DETOUR RTE	Right Lane	RGT LN
East	E	Saturday	SAT
Emergency	EMER	Service Road	SERV RD
Emergency Vehicle	EMER VEH	Shoulder	SHLDR
Entrance, Enter	ENT	Slippery	SLIP
Express Lanes	EXP LANE	South	S
Expressway	EXPWY	Speed	SPD
Distance Feet	Distance FT	Street	ST
Fog Ahead	FOG AHD	Sunday	SUN
Freeway	FRWY, FWY	Telephone	PHONE
Freeway Blocked	FWY BLKD	Thursday	THURS
Friday	FRI	To Downtown	TO DWNTN
Hazardous Driving	HAZ DRIVING	Traffic	TRAF
Highway	HWY	Travelers	TRVLRS
Hours	HR	Tuesday	TUES
Information	INFO	Turnpike	Name TRNPK
Left	LFT	Upper Level	UPPR LVL
Left Lane	LFT LN	Warning	WARN
Lane Closed	LN CLSD	Wednesday	WED
Lower Level	LOWR LVL	Weight Limit	WT LIMIT
Maintenance	MAINT	Wet Pavement	WET PVMT
Roadway designation #	IH-number, US-number, SH-number, FM-number	West	W

WHEN NOT IN USE, REMOVE THE PCMS FROM THE RIGHT-OF-WAY OR PLACE THE PCMS BEHIND CONCRETE TRAFFIC BARRIER.

TYPICAL FLASHING ARROW PANEL

1. The Flashing Arrow Panel should be used for all lane closures on multi-lane roadways, or slow moving maintenance or construction activities on the travel lanes.
2. Flashing Arrow Panels should not be used on two-lane, two-way roadways, detours, diversions or work on shoulders unless the "CAUTION" display (see detail below) is used.
3. The Engineer/Inspector shall choose all appropriate signs, barricades and/or other traffic control devices that should be used in conjunction with the Flashing Arrow Panel.
4. The Flashing Arrow Panel should be able to display the following symbols:

Flashing RIGHT (LEFT) ARROW

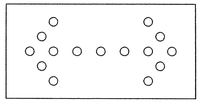

Flashing DOUBLE ARROW

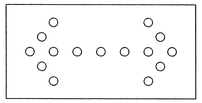

Flashing CAUTION

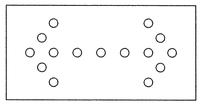

5. The "CAUTION" display consists of four corner lamps flashing simultaneously.
6. The straight line caution display is NOT ALLOWED.
7. The Flashing Arrow Panel shall be capable of minimum 50 percent dimming from rated lamp voltage. The flashing rate of the lamps shall not be less than 25 nor more than 40 flashes per minute.
8. Minimum lamp "on time" shall be approximately 50 percent for the flashing arrow and equal intervals of 25 percent for each sequential phase of the flashing chevron.
9. The sequential arrow display is NOT ALLOWED.
10. The flashing arrow display is the TxDOT standard; however, the sequential Chevron display may be used during daylight operations.

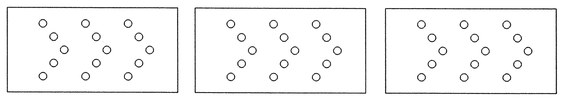

11. The Flashing Arrow Panel shall be mounted on a vehicle, trailer or other suitable support.
12. A Flashing Arrow Panel SHOULD NOT BE USED to laterally shift all lanes of traffic on a multi-lane roadway at once.

REQUIREMENTS

TYPE	MINIMUM SIZE	MINIMUM NUMBER OF PANEL LAMPS	MINIMUM VISIBILITY DISTANCE
B	30 x 60	13	3/4 mile
C	48 x 96	15	1 mile

ATTENTION: Flashing Arrow Panels shall be equipped with automatic dimming devices.

WHEN NOT IN USE, REMOVE THE ARROW PANEL FROM THE RIGHT-OF-WAY OR PLACE THE ARROW PANEL BEHIND CONCRETE TRAFFIC BARRIER.

TYPE C DELINEATORS FOR CONCRETE TRAFFIC BARRIER AND ATTENUATORS

1. Type C Delineators shall be prequalified, and conform to the color and reflectivity requirements of DMS-8600. A list of prequalified Type C Delineators can be found at the following Web site: ftp://ftp.dot.state.tx.us/pub/txdot-info/gsd/pdf/dms8600preq.pdf.
2. Color of delineators shall be as specified in the "Texas Manual on Uniform Traffic Control Devices" (TMUTCD). The cost of the Type C Delineators shall be considered subsidiary to Item 502.

CONCRETE TRAFFIC BARRIER (CTB)

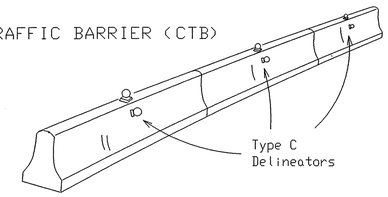

3. Two (2) Type C Delineators should be mounted on each section of CTB in approximately the midsection of the CTB. The Type C Delineator on the side of the CTB shall be installed directly below the Type C Delineator mounted on top of the CTB.
4. Maximum spacing of Type C Delineators is 40 feet.
5. Pavement markers or temporary flexible-reflective roadway marker tabs shall NOT be used as CTB delineation.
6. Attach Type C Delineators on CTB as per manufacturer's recommendations.
7. Missing or damaged Type C Delineators shall be replaced as directed by the Engineer.

LOW PROFILE CONCRETE BARRIER (LPCB)

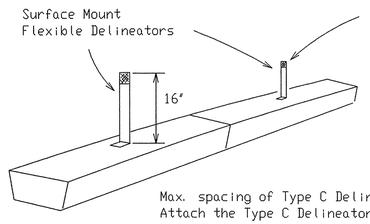

Max. spacing of Type C Delineators is 20 feet. Attach the Type C Delineators as per manufacturer's recommendations.

DELINEATION OF END TREATMENTS

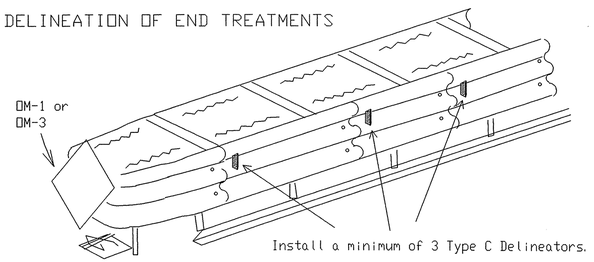

	APPROACHING TRAFFIC	
	BOTH SIDES	ONE SIDE
DELINEATION	OM-1	OM-3 or Vertical Panel

Attach the Type C Delineators as per manufacturer's recommendations.

WARNING LIGHTS

1. Warning lights shall meet the requirements of the TMUTCD.
2. Warning lights shall NOT be installed on barricades.
3. Type A-Low Intensity Flashing Warning Lights are commonly used with signs. They are intended to warn of an approaching potentially hazardous area. Their use shall be as indicated on this sheet and/or other sheets of the plans by the designation " FL". The Type A Warning Lights shall not be used with signs manufactured with Type E Sheeting (Fluorescent Prismatic) meeting the requirements of Departmental Material Specification DMS-8300.
4. Type-C Steady Burn Lights are intended to be used in a series for delineation to supplement other traffic control devices. Their use shall be as indicated on this sheet and/or other sheets of the plans by the designation " SB ".
5. The Engineer/Inspector or the plans shall specify the location and type of warning lights to be installed on the traffic control devices.
6. When required by the Engineer, the Contractor shall furnish a copy of the warning lights certification. The warning light manufacturer will certify the warning lights meet the requirements of the latest ITE Purchase Specifications for Flashing and Steady-Burn Warning Lights.

END TREATMENTS FOR CTB'S USED IN WORK ZONES

End treatments used on CTB's in work zones shall meet crashworthy standards as defined in the National Cooperative Highway Research Report 350. Refer to the CWZTCD List for approved end treatments and manufacturers.

Only pre-qualified products shall be used. A copy of the "Compliant Work Zone Traffic Control Devices List" (CWZTCD) describes pre-qualified products and their sources and may be obtained by contacting:

Standards Engineer
Traffic Operations Division - TE
Texas Department of Transportation
125 East 11th Street
Austin, Texas 78701-2483
Phone (512) 416-3120
Fax (512) 416-3299

Instructions to locate the "CWZTCD" on TxDOT website are:

Start at website - www.dot.state.tx.us
Click on "About TxDOT",
Click on "Functional Organizational Chart",
Click on Traffic Operations Box,
Click on "Compliant Work Zone Traffic Control Devices",
again click on "Compliant Work Zone Traffic Control Devices".
This site is printable.

TRUCK-MOUNTED ATTENUATORS

1. Truck-mounted attenuators (TMA) used on TxDOT facilities must meet the requirements outlined in the National Cooperative Highway Research Report No. 350 (NCHRP 350).
2. Refer to the CWZTCD for the requirements of Level 2 or Level 3 TMAs.
3. Refer to the dates shown in the CWZTCD to ensure that the TMA meets the age requirements and the crashworthiness criteria established by the Federal Highway Administration (FHWA) for TMAs.
4. Refer to the CWZTCD for a list of approved TMAs.
5. TMAs are required on freeways unless otherwise noted in the plans.
6. A TMA should be used anytime that it can be positioned approximately 100 feet or less in advance of the area of crew exposure without adversely affecting the work performance.
7. The only reason a TMA should not be required is when a work area is spread down the roadway and the work crew is an extended distance from the TMA.

STANDARD PLANS
Texas Department of Transportation
Traffic Operations Division

BARRICADE AND CONSTRUCTION ARROW & MESSAGE SIGNS, REFLECTORS & WARNING LIGHT STANDARD

6 of 12 BC(6)-03

©TxDOT 11-4-02	DN-BAS	CK-GRB	DW-FDN	CK-CAL
REVISIONS	STATE DISTRICT	FEDERAL REGION	FEDERAL AID PROJECT	SHEET
		6		
	COUNTY	CONTROL	SECTION	JOB	HIGHWAY

C9.06 106

PI NO: 1294-06-065

DWG NO: 1294-06-065-07A.DWG
P-200708-01

TWILLIAMS 02/22/2008 - 9:53AM
N:\JOBS\1200-1299\1294-06-065\DWG\1294-06-065-07A.DWG

ACC:
LEVELS DISPLAYED
1 2 3 4 5 6 7 8 9 10 11 12 13 14 15 16
17 18 19 20 21 22 23 24 25 26 27 28 29 30 31 32
33 34 35 36 37 38 39 40 41 42 43 44 45 46 47 48
49 50 51 52 53 54 55 56 57 58 59 60 61 62 63

DISCLAIMER
The use of this standard is governed by the "Texas Engineering Practice Act". No warranty of any kind is made by TxDOT for any purpose whatsoever. TxDOT assumes no responsibility for the conversion of this standard to other formats or for incorrect results or damages resulting from its use.

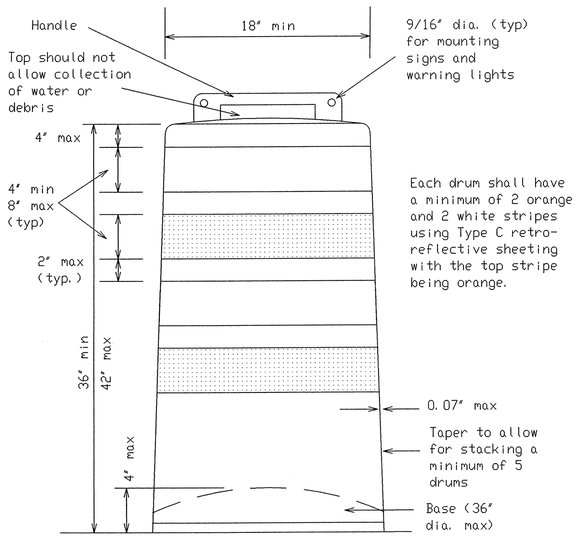

GENERAL NOTES

1. Drums and all related items shall comply with the requirements of the current version of the "Texas Manual on Uniform Traffic Control Devices" (TMUTCD) and the "Compliant Work Zone Traffic Control Devices List" (CWZTCD).
2. Drums, bases, and related materials shall exhibit good workmanship and shall be free from objectionable marks or defects that would adversely affect their appearance or serviceability.
3. The Contractor shall have a maximum of 24 hours to replace any plastic drums or other traffic control devices identified for replacement by the Engineer/Inspector. The replacement device must be an approved device.

Prequalified plastic drums shall meet the following requirements:

GENERAL DESIGN REQUIREMENTS

1. Plastic drums shall be a two-piece design; the "body" of the drum shall be the top portion and the "base" shall be the bottom.
2. The body and base shall lock together in such a manner that the body separates from the base when impacted by a vehicle traveling at a speed of 20 MPH or greater but prevents accidental separation due to normal handling and/or air turbulence created by passing vehicles.
3. Plastic drums shall be constructed of lightweight flexible, and deformable materials. The Contractor shall NOT use metal drums or single piece plastic drums as channelization devices or sign supports.
4. Drums shall present a profile that is a minimum of 18 inches in width at the 36 inch height when viewed from any direction. The height of drum unit (body installed on base) shall be a minimum of 36 inches and a maximum of 42 inches.
5. The top of the drum shall have a built-in handle for easy pickup and shall be designed to drain water and not collect debris. The handle shall have a minimum of two widely spaced 9/16 inch diameter holes to allow attachment of a warning light, delineator reflector unit or non-plywood sign.
6. The exterior of the drum body shall have a minimum of four alternating orange and white retroreflective circumferential stripes not less than 4 inches nor greater than 8 inches in width. Any non-reflectorized space between any two adjacent stripes shall not exceed 2 inches in width.
7. Bases shall have a maximum width of 36 inches, a maximum height of 4 inches, and a minimum of two footholds of sufficient size to allow base to be held down while separating the drum body from the base.
8. Plastic drums shall be constructed of ultra-violet stabilized, orange, high-density polyethylene (HDPE) or other approved material.
9. Drum body shall have a minimum unballasted weight of 7.7 lbs. and maximum unballasted weight of 11 lbs. The wall of the drum body shall be a minimum of 0.07 inch in thickness. Weight of any drum supplied shall not vary more than 0.5 lb. from that of the prequalified sample.
10. Drum and base shall be marked with manufacturer's name and model number.

RETROREFLECTIVE SHEETING

1. The stripes used on drums shall be constructed of sheeting meeting the color and retroreflectivity requirements of Departmental Materials Specification DMS-8300, "Flat Surface Reflective Sheeting." High Specific Intensity (Type C) retro-reflective sheeting shall be supplied unless otherwise specified in the plans.
2. The sheeting shall be suitable for use on and shall adhere to the drum surface such that, upon vehicular impact, the sheeting shall remain adhered in-place and exhibit no delaminating, checking, cracking, or loss of retroreflectivity other than that loss due to abrasion of the sheeting surface.

BALLAST

1. Unballasted bases shall be large enough to hold up to 50 lbs. of sand. This base, when filled with the ballast material, should weigh between 35 lbs (minimum) and 50 lbs (maximum). The ballast may be sand in one to three sandbags separate from the base, sand in a sand-filled plastic base, or other ballasting devices as approved by the Engineer. Stacking of sandbags will be allowed, however height of sandbags above pavement surface may not exceed 12 inches.
2. Bases with built-in ballast shall weigh between 40 lbs. and 50 lbs. Built-in ballast can be constructed of an integral crumb rubber base or a solid rubber base.
3. The ballast shall not be heavy objects, water, or any material that would become hazardous to motorists, pedestrians, or workers when the drum is struck by a vehicle.
4. When used in regions susceptible to freezing, drums shall have drainage holes in the bottoms so that water will not collect and freeze becoming a hazard when struck by a vehicle.
5. Ballast shall not be placed on top of drums.
6. Adhesives may be used to secure base of drums to pavement.

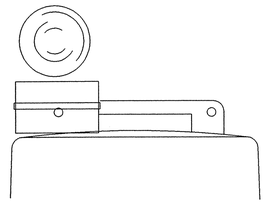

Type C Warning Light or approved substitute mounted adjacent to the travel way.

WARNING LIGHTS AND DELINEATORS MOUNTED ON PLASTIC DRUMS

1. Type A flashing warning lights are intended to warn drivers that they are approaching or are in a potentially hazardous area.
2. Type A flashing warning lights are not intended for delineation and shall not be used in a series.
3. Type C steady-burn warning lights are intended to be used in a series to delineate the edge of the travel lane on detours, on lane changes, on lane closures, and on other similar conditions.
4. Type A and Type C warning lights shall be installed at locations as detailed on other sheets in the plans.
5. Warning lights shall not be installed on a drum that has a sign, chevron or vertical panel.
6. Type A Class 1, Type A Class 2, or Type B Reflector Units (D & DM Standard) may be attached to drums to delineate the intended vehicular path. The color of the reflector unit shall correspond to the pavement marking it is supplementing or for which it is substituting (left edgeline-yellow or right edgeline-white). The reflective unit shall be attached to the handle of the drum using the mounting hole nearest the travel lane and shall be aligned perpendicular to approaching traffic.
7. Delineators may be used as directed by the Engineer. Delineators may not be used as a substitute for warning lights.

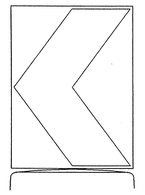

18" x 24" Sign
(Maximum Sign Dimension)
Chevron CW1-8, Driveway sign D70a, Keep Right R4 series or other signs as approved by Engineer

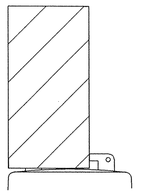

12" x 24"
Vertical Panel
mount with diagonals sloping down towards travel way

Plywood, Aluminum or Metal sign substrates shall NOT be used on plastic drums

SIGNS, CHEVRONS, AND VERTICAL PANELS MOUNTED ON PLASTIC DRUMS

1. Signs used on plastic drums shall be manufactured using substrates listed on the CWZTCD.
2. Chevrons and other work zone signs with an orange background shall be manufactured with Type E (Fluorescent Prismatic) sheeting meeting the color and retroreflectivity requirements of DMS-8300, "Flat Surface Reflective Sheeting," unless otherwise specified in the plans.
3. Vertical Panels shall be manufactured with orange and white sheeting meeting the requirements of DMS-8300 Type C (High Specific Intensity). Diagonal stripes on Vertical Panels shall slope down toward the intended traveled lane.
4. Other sign messages (text or symbolic) may be used as approved by the Engineer. Sign dimensions shall not exceed 18 inches in width or 24 inches in height.
5. Signs shall be installed using a 1/2 inch bolt (nominal) and nut, two washers, and one locking washer for each connection.
6. Mounting bolts and nuts shall be fully engaged and adequately torqued. Bolts should not extend more than 1/2 inch beyond nuts.

WARNING REFLECTORS MOUNTED ON PLASTIC DRUMS AS A SUBSTITUTE FOR TYPE C WARNING LIGHTS

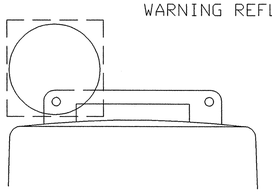

Warning reflector may be round or square.
Must have a reflective surface area of at least 30 square inches

1. A warning reflector or approved substitute may be mounted on a plastic drum as a substitute for a Type C, steady burn warning light at the discretion of the Contractor unless otherwise noted in the plans.
2. The warning reflector shall be manufactured using a sign substrate approved for use with plastic drums listed on the CWZTCD.
3. The warning reflector shall have a minimum retroreflective surface area (one-side) of 30 square inches.
4. Round reflectors shall be fully reflectorized, including the area where attached to the drum.
5. Square substrates must have a minimum of 30 square inches of reflectorized sheeting. They do not have to be reflectorized where it attaches to the drum.
6. The side of the warning reflector facing approaching traffic shall have sheeting meeting the color and retroreflectivity requirements for DMS 8300-Type D (Non-fluorescent Prismatic).
7. When used near two-way traffic, both sides of the warning reflector shall be reflectorized.
8. The warning reflector should be mounted on the side of the handle nearest approaching traffic.

TYPICAL DETAIL OF LANE CLOSURE USING PLASTIC DRUMS AS CHANNELIZING DEVICES

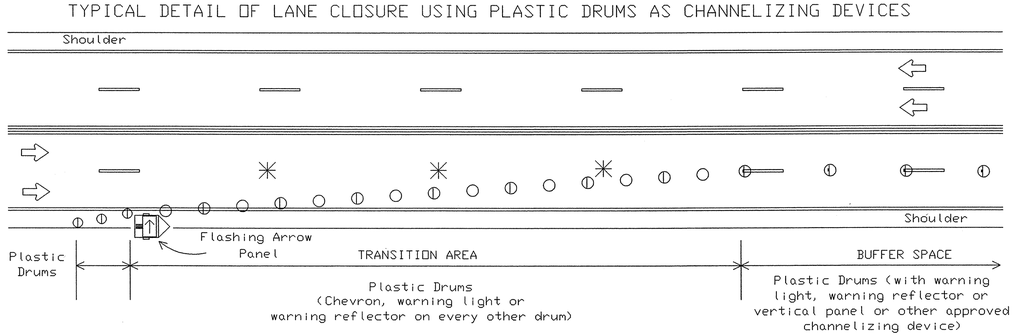

LEGEND

- Flashing Arrow Panel
- Plastic Drum
- Plastic Drum w/ approved channelizing device

Provide adequate sight distance when placing lane closures. Do not place lane closures in vertical or horizontal curves.
See BC(8) for table showing the spacing of channelizing devices in the taper and tangent section.

✳ NOTE: Lane lines shall be removed when the lane closure occupies a location for longer than 2 weeks.

Only pre-qualified products shall be used. A copy of the "Compliant Work Zone Traffic Control Devices List" (CWZTCD) describes pre-qualified products and their sources and may be obtained by contacting:

Standards Engineer
Traffic Operations Division - TE
Texas Department of Transportation
125 East 11th Street
Austin, Texas 78701-2483
Phone (512) 416-3120
Fax (512) 416-3299

Instructions to locate the "CWZTCD" on TxDOT website are:

Start at website - www.dot.state.tx.us
Click on "About TxDOT",
Click on "Functional Organizational Chart",
Click on Traffic Operations Box,
Click on "Compliant Work Zone Traffic Control Devices",
again click on "Compliant Work Zone Traffic Control Devices".
This site is printable.

STANDARD PLANS
Texas Department of Transportation
Traffic Operations Division

BARRICADE AND CONSTRUCTION PLASTIC DRUM STANDARD

7 of 12

BC(7)-03

©TxDOT 11-4-02	DN-BAS	CK-GRB	DW-FDN	CK-CAL
REVISIONS 4-03	STATE DISTRICT	FEDERAL REGION	FEDERAL AID PROJECT	SHEET
		6		
	COUNTY	CONTROL	SECTION	JOB	HIGHWAY

4/03 Revision

1 Revised note

C9.07 107

PI NO: 1294-06-065

DWG NO: 1294-06-065-07A.DWG

P-200708-01

TWILLIAMS 02/22/2008 - 8:53AM
N:\JOBS\1200-1299\1294-06-065\DWG\1294-06-065-07A.DWG

LEVELS DISPLAYED
1 2 3 4 5 6 7 8 9 10 11 12 13 14 15 16 17 18 19 20 21 22 23 24 25 26 27 28 29 30 31 32 33 34 35 36 37 38 39 40 41 42 43 44 45 46 47 48 49 50 51 52 53 54 55 56 57 58 59 60 61 62 63

ACC:

CHANNELIZING DEVICES

VERTICAL PANELS

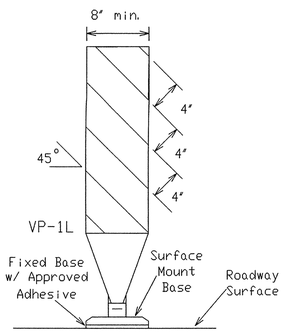

FIXED

(Rigid or self-righting)

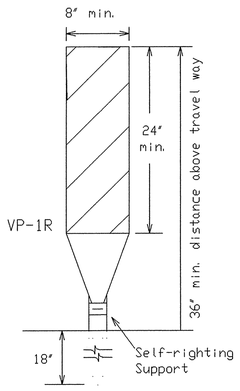

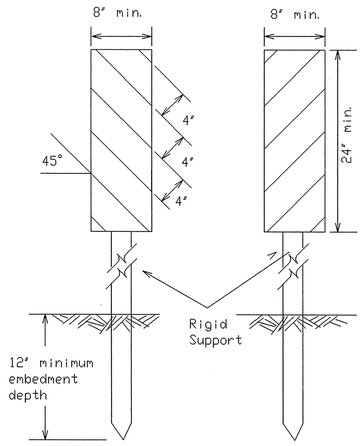

DRIVEABLE

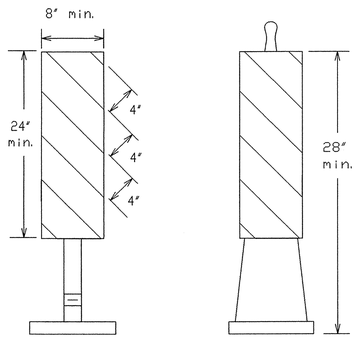

(Rigid or self-righting)

PORTABLE

1. Vertical Panels (VP's) are normally used to channelize traffic or divide opposing lanes of traffic.
2. VP's may be used in daytime or nighttime situations. They may be used at the edge of shoulder drop-offs and other areas such as lane transitions where positive daytime and nighttime delineation is required. The Engineer/Inspector shall refer to the Roadway Design Manual Appendix B 'Treatment of Pavement Drop-offs in Work Zones' for additional guidelines on the use of VP's for drop-offs.
3. VP's should be mounted back to back if used at the edge of cuts adjacent to two-way two lane roadways. Stripes are to be reflective orange and reflective white and should always slope downward toward the travel lane.
4. VP's used on expressways, freeways, and on high speed roadways shall have a minimum of 2 square feet of retroreflective area facing traffic.
5. Self-righting supports are available with portable base. See "Compliant Work Zone Traffic Control Devices List" (CWZTCD).
6. Sheeting for the VP's shall be retroreflective Type C (High Specific Intensity) conforming to Departmental Material Specification DMS-8300, unless noted otherwise.

CHEVRONS

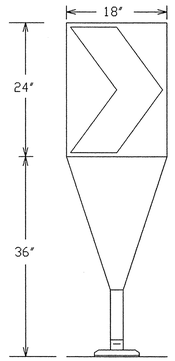

Fixed Base w/ Approved Adhesive (Driveable Base, or Flexible Support can be used)

1. The chevron shall be a vertical rectangle with a minimum size of 12 by 18 inches.
2. Chevrons are intended to give notice of a sharp change of alignment with the direction of travel and provide additional emphasis and guidance for vehicle operators with regard to changes in horizontal alignment of the roadway.
3. Chevrons, when used, shall be erected on the outside of a sharp curve or turn, or on the far side of an intersection. They shall be in line with and at right angles to approaching traffic. Spacing should be such that the motorist always has three in view, until the change in alignment eliminates its need.
4. To be effective, the chevron should be visible for at least 500 feet.
5. Chevrons shall be orange with a black non-reflective legend. Sheeting for the chevron shall be retroreflective Type E (Fluorescent Prismatic) conforming to Departmental Material Specification DMS-8300, unless noted otherwise. The legend shall be black vinyl non-reflective decal sheeting meeting the requirements of DMS-8320.

Posted Speed	Formula	Minimum Desirable Taper Lengths ✳✳ 10' Offset	11' Offset	12' Offset	Suggested Maximum Spacing of Channelizing Devices On a Taper	On a Tangent
30	$L=\frac{WS^2}{60}$	150'	165'	180'	30'	60' -75'
35		205'	225'	245'	35'	70' -90'
40		265'	295'	320'	40'	80' -100'
45	L=WS	450'	495'	540'	45'	90' -110'
50		500'	550'	600'	50'	100' -125'
55		550'	605'	660'	55'	110' -140'
60		600'	660'	720'	60'	120' -150'
65		650'	715'	780'	65'	130' -165'
70		700'	770'	840'	70'	140' -175'
75		750'	825'	900'	75'	150' -185'

✳✳ Taper lengths have been rounded off.
L=Length of Taper (FT.) W=Width of Offset (FT.) S=Posted Speed (MPH)

GENERAL NOTES:

1. Work Zone channelizing devices illustrated on this sheet may be installed in close proximity to traffic and are suitable for use on high or low speed roadways. The Engineer/Inspector shall ensure that spacing and placement is uniform and in accordance with the 'Texas Manual on Uniform Traffic Control Devices' (TMUTCD).
2. Channelizing devices shown on this sheet may have a driveable, fixed or portable base. The requirement for self-righting channelizing devices must be specified in the General Notes or other plan sheets.
3. Channelizing devices on self-righting supports should be used in work zone areas where channelizing devices are frequently impacted by errant vehicles or vehicle related wind gusts making alignment of the channelizing devices difficult to maintain. Locations of these devices shall be detailed elsewhere in the plans. These devices shall conform to the TMUTCD and the 'Compliant Work Zone Traffic Control Devices List' (CWZTCD).
4. The contractor shall maintain devices in a clean condition and replace damaged, non-reflective, faded, or broken devices and bases as required by the Engineer/Inspector. The Contractor shall be required to maintain proper device spacing and alignment.
5. Portable bases shall be fabricated from virgin and/or recycled rubber. The portable bases shall weigh approximately 35 lbs.
6. Pavement surfaces shall be prepared in a manner that ensures proper bonding between the adhesives, the fixed mount bases and the pavement surface. Adhesives shall be prepared and applied according to the manufacturer's recommendations.
7. The installation and removal of channelizing devices shall not cause detrimental effects to the final pavement surfaces, including pavement surface discoloration or surface integrity. Driveable bases shall not be permitted on final pavement surfaces. The Engineer/Inspector shall approve all application and removal procedures of fixed bases.
8. Examples on this sheet are the most commonly used channelizing devices in work zones. For other devices, refer to the CWZTCD.

Only pre-qualified products shall be used. A copy of the 'Compliant Work Zone Traffic Control Devices List' (CWZTCD) describes pre-qualified products and their sources and may be obtained by contacting:

Standards Engineer
Traffic Operations Division - TE
Texas Department of Transportation
125 East 11th Street
Austin, Texas 78701-2483
Phone (512) 416-3120
Fax (512) 416-3299

Instructions to locate the 'CWZTCD' on TxDOT website are:

Start at website - www.dot.state.tx.us
Click on 'About TxDOT',
Click on 'Functional Organizational Chart',
Click on Traffic Operations Box,
Click on 'Compliant Work Zone Traffic Control Devices',
again click on 'Compliant Work Zone Traffic Control Devices'.
This site is printable.

OPPOSING TRAFFIC LANE DIVIDERS (OTLD)

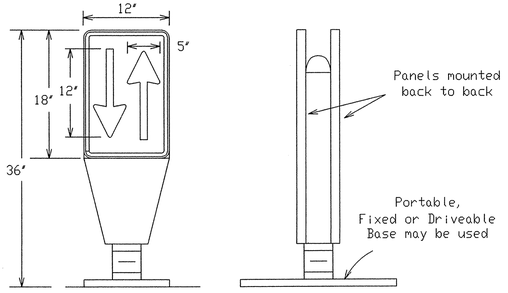

1. Opposing Traffic Lane Dividers (OTLD) are delineation devices designed to convert a normal one-way roadway section to two-way operation. OTLD's are used on temporary centerlines. The upward and downward arrows on the sign's face indicate the direction of traffic on either side of the divider. The base is secured to the pavement with an adhesive or rubber weight to minimize movement caused by a vehicle impact or wind gust. The OTLD is placed on a flexible self-righting support that returns to an upright position when impacted by a vehicle.
2. The OTLD may be used in combination with simple tubular markers or vertical panels (vp's).
3. Spacing between the OTLD shall not exceed 500 feet. Tubular markers or vp's placed between the OTLD's should not exceed 100 foot spacing.
4. The OTLD shall be orange with a black non-reflective legend. Sheeting for the OTLD shall be retroreflective Type E (Fluorescent Prismatic) conforming to Departmental Material Specification DMS-8300, unless noted otherwise. The legend shall be black vinyl non-reflective decal sheeting meeting the requirements of DMS-8320.

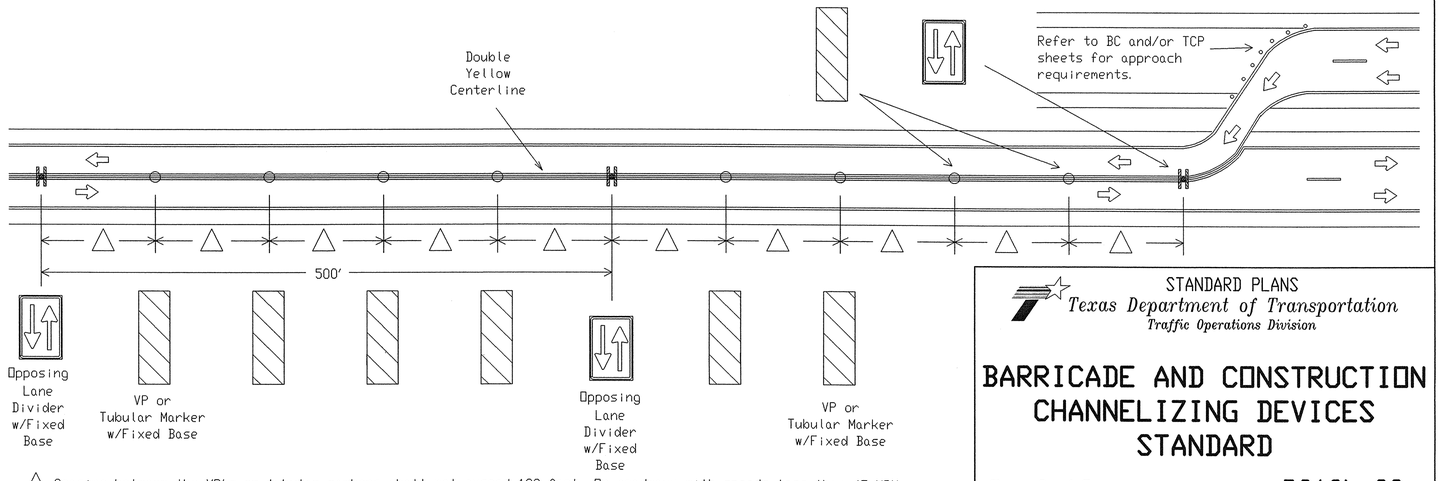

△ Spacing between the VP's or tubular markers shall not exceed 100 feet. On roadways with speeds less than 45 MPH, spacing between the tubular markers or VP's shall be as shown on the channelizing spacing table shown on this page. If the table shows spacing greater than 100 feet based on the roadway speed, then use a maximum of 100 feet spacing between the tubular markers or VP's. Every fifth channelizing device shall be an OTLD. Spacing between the OTLD shall not exceed 500 feet. When using this type of traffic control set-up, the OTLD, VP's or tubular markers shall have the fixed base with approved adhesive per the manufacturer's recommendations.

STANDARD PLANS
Texas Department of Transportation
Traffic Operations Division

BARRICADE AND CONSTRUCTION CHANNELIZING DEVICES STANDARD

8 of 12 BC(8)-03

©TxDOT 11-4-02	DN-BAS	CK-GRB	DW-FDN	CK-CAL

REVISIONS	STATE DISTRICT	FEDERAL REGION	FEDERAL AID PROJECT	SHEET
		6		
	COUNTY	CONTROL	SECTION	JOB	HIGHWAY

C9.08 108

PI NO: 1294-06-065

DWG NO: 1294-06-065-07A.DWG
P-200708-01

LEVELS DISPLAYED
1 2 3 4 5 6 7 8 9 10 11 12 13 14 15 16
17 18 19 20 21 22 23 24 25 26 27 28 29 30 31 32
33 34 35 36 37 38 39 40 41 42 43 44 45 46 47 48
49 50 51 52 53 54 55 56 57 58 59 60 61 62 63

ACC:

DISCLAIMER
The use of this standard is governed by the "Texas Engineering Practice Act". No warranty of any kind is made by TxDOT for any purpose whatsoever. TxDOT assumes no responsibility for the conversion of this standard to other formats or for incorrect results or damages resulting from its use.

TWILLIAMS 02/22/2008 - 8:54AM
N:\ABS\1200-1299\1294-06-065\DWG\1294-06-065-07A.DWG

DISCLAIMER
The use of this standard is governed by the "Texas Engineering Practice Act". No warranty of any kind is made by TxDOT for any purpose whatsoever. TxDOT assumes no responsibility for the conversion of this standard to other formats or for incorrect results or damages resulting from its use.

TYPE III BARRICADES

1. Refer to the Compliant Work Zone Traffic Control Devices List (CWZTCD) for details of the Type III Barricades and a list of all materials used in the construction of Type III Baricades.
2. Type III Barricades shall be used at each end of construction projects closed to all traffic.
3. Barricades extending across a roadway should have stripes that slope downward in the direction toward which traffic must turn in detouring. When both right and left turns are provided, the chevron striping may slope downward in both directions from the center of the barricade.
4. Striping of rails, for the right side of the roadway, should slope downward to the left. For the left side of the roadway, striping should slope downward to the right.
5. Identification markings may be shown only on the back of the barricade rails. The maximum height of letters and/or company logos used for identification shall be 1".
6. Barricades shall not be placed parallel to traffic unless an adequate clear zone is provided.
7. Warning lights shall NOT be installed on barricades.
8. Where barricades require the use of weights to keep from turning over, the use of sandbags with dry, cohesionless sand is recommended. The sandbags will be tied shut to keep the sand from spilling and to maintain a constant weight. Rock, concrete, iron, steel or other solid objects will NOT be permitted. Sandbags should weigh a minimum of 35 lbs and a maximum of 50 lbs. Sandbags shall be made of a durable material that tears upon vehicular impact. Rubber (such as tire inner tubes) shall not be used for sandbags. Sandbags shall only be placed along or upon the base supports of the device and shall not be suspended above ground level or hung with rope, wire, chains or other fasteners.

Barricades shall NOT be used as a sign support.

TYPICAL STRIPING DETAIL FOR BARRICADE RAIL

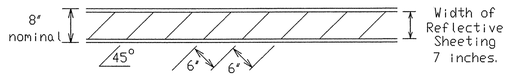

TYPICAL PANEL DETAIL FOR SKID OR POST TYPE BARRICADES

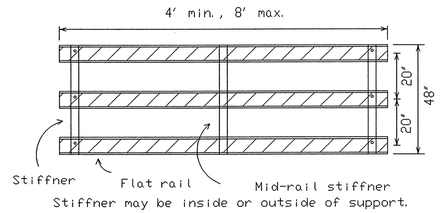

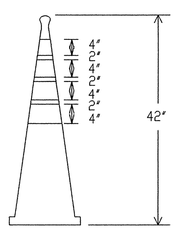

EDGELINE CHANNELIZER

1. This device is intended only for use in place of a vertical panel to channelize traffic by indicating the edge of the travel lane.
2. This device shall not be used to separate lanes of traffic (opposing or otherwise) or warn of objects.
3. This device is based on a 42 inch, two-piece cone with an alternate striping pattern: four 4 inch retroreflective bands, with an approximate 2 inch gap between bands. The color of the band should correspond to the color of the edgeline (yellow for left edgeline, white for right edgeline) for which the device is substituted or for which it supplements. The reflectorized bands shall be retroreflective Type C (High Specific Intensity) conforming to Departmental Material Specification DMS-8300, unless otherwise noted.
4. The base must weigh a minimum of 30 lbs.

TYPE III BARRICADE (POST AND SKID) TYPICAL APPLICATION

Each roadway of a divided highway shall be barricaded in the same manner.

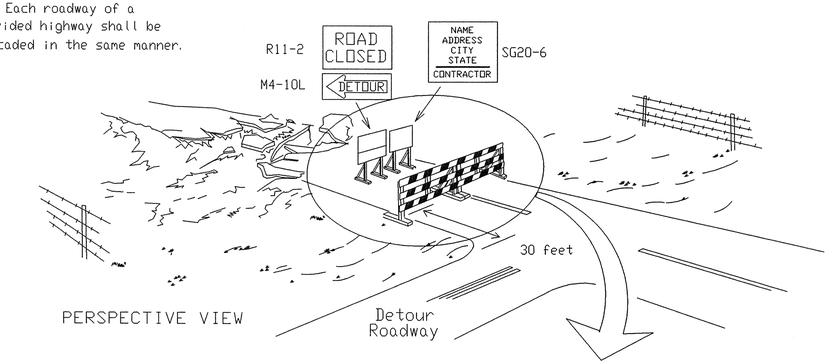

PERSPECTIVE VIEW

The three rails on Type III barricades shall be reflectorized orange and reflective white stripes on one side facing one-way traffic and both sides for two-way traffic.

Barricade striping should slant downward in the direction of detour.

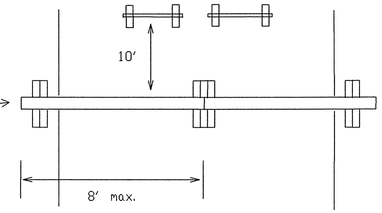

PLAN VIEW

1. Signs should be mounted on independent supports at a 7 foot mounting height in center of roadway. The signs should be a minimum of 10 feet behind Type III Barricades.
2. Advance signing shall be as specified elsewhere in the plans.

CULVERT WIDENING OR OTHER ISOLATED WORK WITHIN THE PROJECT LIMITS

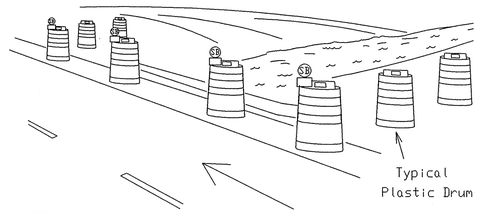

PERSPECTIVE VIEW

1. Where positive redirectional capability is provided, drums may be omitted.
2. Plastic construction fencing may be used with drums for safety as required in the plans.
3. Vertical Panels on flexible support may be substituted for drums when the shoulder width is less than 4 feet.
4. When the shoulder width is greater than 12 feet, steady-burn lights may be omitted if drums are used.
5. Drums must extend the length of the culvert widening.

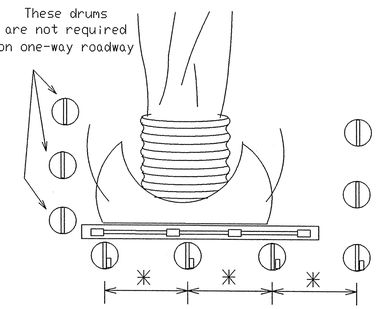

PLAN VIEW

Legend

- Plastic drum
- Plastic drum with steady burn light

Only pre-qualified products shall be used. A copy of the 'Compliant Work Zone Traffic Control Devices List' (CWZTCD) describes pre-qualified products and their sources and may be obtained by contacting:

Standards Engineer
Traffic Operations Division - TE
Texas Department of Transportation
125 East 11th Street
Austin, Texas 78701-2483
Phone (512) 416-3120
Fax (512) 416-3299

Instructions to locate the 'CWZTCD' on TxDOT website are:

Start at website - www.dot.state.tx.us
Click on 'About TxDOT',
Click on 'Functional Organizational Chart',
Click on Traffic Operations Box,
Click on 'Compliant Work Zone Traffic Control Devices',
again click on 'Compliant Work Zone Traffic Control Devices'.
This site is printable.

CONES

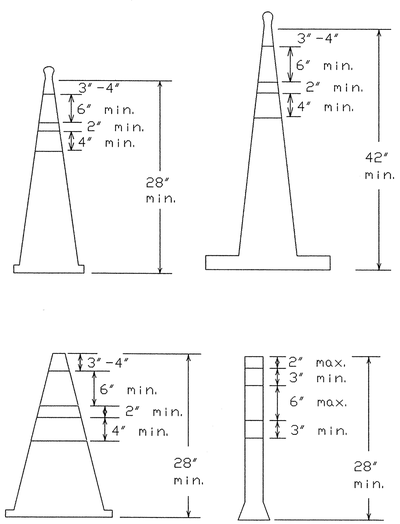

28" Cones shall have a minimum weight of 9 1/2 lbs.

42" 2-piece cones shall have a minimum weight of 30 lbs.

1. Traffic cones and tubular markers shall be a minimum of 28 inches in height when used either on freeways or at nighttime.
2. Cones or tubular markers shall be predominantly orange, fluorescent red-orange, or fluorescent yellow-orange. They should be kept clean and bright for maximum visibility.
3. Cones used only for daytime operations do not require the reflectorized bands.
4. Cones used for nighttime operations shall be reflectorized. Reflectorized material shall have a smooth, sealed outer surface that displays the same approximate color during the day and night. The reflectorized bands shall be retroreflective Type C (High Specific Intensity) conforming to Departmental Material Specification DMS-8300, unless otherwise noted.
5. When used at night, appropriate personnel shall ensure that cones and tubular markers remain in their proper location and in an upright position.
6. Reflectorization of cones shall consist of a minimum 6 inch band placed at least 3 inches but not more than 4 inches from the top, supplemented by a minimum 4 inch band spaced a minimum of 2 inches below the 6 inch band.
7. Reflectorization of tubular markers shall be a minimum of two 3 inch bands placed a maximum of 2 inches from the top with a maximum of 6 inches between bands. The reflectorized bands shall be retroreflective Type C (High Specific Intensity) conforming to Departmental Material Specification DMS-8300, unless otherwise noted.
8. One-piece cones or tubular markers are generally suitable for temporary usage (up to 8 hours) with other channelization devices such as vertical panels, drums or two-piece cones for long term usage. Care should be taken to ensure they remain in their proper location and in an upright position.
9. Cones or tubular markers used on each project shall be of the same size and shape.
10. The handle may be designed as a hook or other shape, fabricated from non-rigid materials similar to the cone material, and may extend up to a maximum of 8 inches above the top of cone. Length of the handle shall not be considered with regard to the overall height of the cone.

LEVELS DISPLAYED
1 2 3 4 5 6 7 8 9 10 11 12 13 14 15 16
17 18 19 20 21 22 23 24 25 26 27 28 29 30 31 32
33 34 35 36 37 38 39 40 41 42 43 44 45 46 47 48
49 50 51 52 53 54 55 56 57 58 59 60 61 62 63
ACC:

TWILLIAMS 02/22/2008 - 8:54AM
N:\OBS\1200-1299\1294-06-065\DWG\1294-06-065-07A.DWG

STANDARD PLANS
Texas Department of Transportation
Traffic Operations Division

BARRICADE AND CONSTRUCTION TYPE III BARRICADE & CONES STANDARD

9 of 12 — BC(9)-03

©TxDOT 11-4-02	DN-BAS	CK-GRB	DW-FDN	CK-CAL

REVISIONS	STATE DISTRICT	FEDERAL REGION	FEDERAL AID PROJECT	SHEET
		6		
	COUNTY	CONTROL	SECTION	JOB	HIGHWAY

C9.09 109

PI NO: 1294-06-065

DWG NO: 1294-06-065-07A.DWG
P-200708-01

DISCLAIMER
The use of this standard is governed by the "Texas Engineering Practice Act". No warranty of any kind is made by TxDOT for any purpose whatsoever. TxDOT assumes no responsibility for the conversion of this standard to other formats or for incorrect results or damages resulting from its use.

WORK ZONE PAVEMENT MARKINGS

GENERAL

1. The Contractor shall be responsible for maintaining work zone and existing pavement markings, in accordance with the standard specifications and special provisions, on all roadways open to traffic within the CSJ limits unless otherwise stated in the plans.
2. Color, patterns and dimensions shall be in conformance with the "Texas Manual on Uniform Traffic Control Devices" (TMUTCD).
3. Additional supplemental pavement marking details may be found in the plans or specifications.
4. Pavement markings shall be installed in accordance with the TMUTCD and as shown on the plans.
5. When short term markings are required on the plans, short term markings shall conform with the TMUTCD, the plans and details as shown on the Standard Plan Sheet WZ(STPM).
6. When standard pavement markings are not in place and the roadway is opened to traffic, DO NOT PASS signs shall be erected to mark the beginning of the sections where passing is prohibited and the sections where passing is permitted.
7. All work zone pavement markings shall be installed in accordance with Item 662, "Work Zone Pavement Markings."

RAISED PAVEMENT MARKERS

1. Raised pavement markers are to be placed according to the patterns on BC(11).
2. All raised pavement markers used for work zone markings shall meet the requirements of Item 672, "RAISED PAVEMENT MARKERS" and Departmental Material Specification DMS-4200 or DMS-4300.
3. A list of prequalified reflective raised pavement markers can be found at the following web site:
   ftp://ftp.dot.state.tx.us/pub/txdot-info/gsd/pdf/dms4200preq.pdf
4. A list of prequalified non-reflective traffic buttons can be found at the following web site:
   ftp://ftp.dot.state.tx.us/pub/txdot-info/gsd/pdf/4300preq.pdf

PREFABRICATED PAVEMENT MARKINGS

1. Removable prefabricated pavement markings shall meet the requirements of DMS-8241. A list of prequalified products can be found at the following web site:
   ftp://ftp.dot.state.tx.us/pub/txdot-info/gsd/pdf/pavemark.pdf
2. Non-removable prefabricated pavement markings (foil back) shall meet the requirements of DMS-8240 or the TXDOT Purchase Specification No. 550-74-89. A list of prequalified products and a copy of the TXDOT Purchase Specifications can be found at web sites:
   ftp://ftp.dot.state.tx.us/pub/txdot-info/gsd/pdf/pavement.pdf
   ftp://ftp.dot.state.tx.us/pub/txdot-info/gsd/pdf/tss/tss377.pdf

MAINTAINING WORK ZONE PAVEMENT MARKINGS

1. The Contractor will be responsible for maintaining work zone pavement markings within the work limits.
2. Work zone pavement markings shall be inspected in accordance with the frequency and reporting requirements of work zone traffic control device inspections as required by Form 599.
3. The markings should provide a visible reference for a minimum distance of 300 feet during normal daylight hours and 150 feet when illuminated by automobile low-beam headlights at night, unless sight distance is restricted by roadway geometrics.
4. Markings failing to meet this criteria shall be replaced as required by the Engineer at the expense of the Contractor.

REMOVAL OF PAVEMENT MARKINGS

1. Pavement markings that are no longer applicable, could create confusion or direct a motorist toward or into the closed portion of the roadway, shall be removed or obliterated before the roadway is opened to traffic.
2. The above shall not apply to detours in place for less than two weeks, where flaggers and/or sufficient channelizing devices are used in lieu of markings to outline the detour route.
3. Pavement markings shall be removed to the fullest extent possible, so as not to leave a disernible marking, by any method that does not materially damage the surface or texture of the pavement.
4. The removal of pavement markings may require resurfacing or seal coating portions of the roadway.
5. Subject to the approval of the Engineer, any method that proves to be successful on a particular type pavement may be used.
6. Blast cleaning may be used but will not be required unless specifically shown in the plans.
7. Over-painting of the markings SHALL NOT BE permitted.
8. Removal of raised pavement markers shall be as directed by the Engineer.
9. Removal of existing pavement markings and markers will be paid for directly in accordance with Item 677, "ELIMINATING EXISTING PAVEMENT MARKINGS AND MARKERS," unless otherwise stated in the plans.

Temporary Flexible-Reflective Roadway Marker Tabs

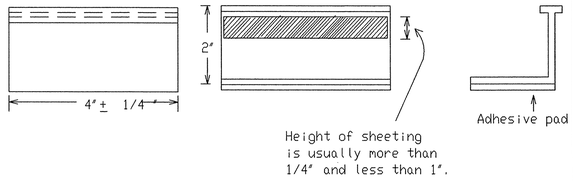

STAPLES OR NAILS SHALL NOT BE USED TO SECURE TEMPORARY FLEXIBLE-REFLECTIVE ROADWAY MARKER TABS TO THE PAVEMENT SURFACE

1. Temporary flexible-reflective roadway marker tabs used as guidemarks shall meet the requirements of DMS-8242.
2. Tabs detailed on this sheet are to be inspected and accepted by the Engineer or designated representative. Sampling and testing is not normally required, however at the option of the Engineer, either "A" or "B" below may be imposed to assure quality before placement on the roadway.
   A. Select five (5) or more tabs at random from each lot or shipment and submit to the Construction Division, Materials and Pavement Section to determine specification compliance.
   B. Select five (5) tabs and perform the following test. Affix five (5) tabs at 24 inch intervals on an asphaltic pavement in a straight line. Using a medium size passenger vehicle or pickup, run over the markers with the front and rear tires at a speed of 35 to 40 miles per hour, four (4) times in each direction. No more than one (1) out of the five (5) reflective surfaces shall be lost or displaced as a result of this test.
3. Small design variances may be noted between tab manufacturers.

Raised Pavement Markers used as Guidemarks

1. Raised pavement markers used as guidemarks shall be from the approved product list, and meet the requirements of DMS-4200.
2. All temporary construction raised pavement markers provided on a project shall be of the same manufacturer.
3. Adhesive for guidemarks shall be bituminous material hot applied or butyl rubber pad for all surfaces, or thermoplastic for concrete surfaces.

Guidemarks shall be designated as:
YELLOW - (two amber reflective surfaces with yellow body).
WHITE - (one silver reflective surface with white body).

DEPARTMENTAL MATERIAL SPECIFICATIONS

PAVEMENT MARKERS (REFLECTORIZED)	DMS-4200
TRAFFIC BUTTONS	DMS-4300
EPOXY AND ADHESIVES	DMS-6100
BITUMINOUS ADHESIVE FOR PAVEMENT MARKERS	DMS-6130
PREFABRICATED PAVEMENT MARKINGS-PERMANENT	DMS-8240
PREFABRICATED PAVEMENT MARKINGS-REMOVABLE	DMS-8241
TEMPORARY FLEXIBLE-REFLECTIVE ROADWAY MARKER TABS	DMS-8242

Only pre-qualified products shall be used. A copy of the "Compliant Work Zone Traffic Control Devices List" (CWZTCD) describes pre-qualified products and their sources and may be obtained by contacting:

Standards Engineer
Traffic Operations Division - TE
Texas Department of Transportation
125 East 11th Street
Austin, Texas 78701-2483
Phone (512) 416-3120
Fax (512) 416-3299

Instructions to locate the "CWZTCD" on TxDOT website are:

Start at website - www.dot.state.tx.us
Click on "About TxDOT",
Click on "Functional Organizational Chart",
Click on Traffic Operations Box,
Click on "Compliant Work Zone Traffic Control Devices",
again click on "Compliant Work Zone Traffic Control Devices".
This site is printable.

STANDARD PLANS
Texas Department of Transportation
Traffic Operations Division

BARRICADE AND CONSTRUCTION PAVEMENT MARKINGS STANDARD

10 of 12 BC(10)-03

TxDOT | DN-LR | CK-DTN | DW-FDN | CK-CAL

REVISIONS	STATE DISTRICT	FEDERAL REGION	FEDERAL AID PROJECT	SHEET
1-97		6		
2-98				
1-02	COUNTY	CONTROL	SECTION	JOB	HIGHWAY
11-02					

C9.10 109A

PI NO: 1294-06-065

DWG NO: 1294-06-065-07A.DWG

P-200708-01

TWILLIAMS 02/22/2008 - 8:54AM
N:\JOBS\200-1299\294-06-065\DWG\294-06-065-07A.DWG

ACC:

LEVELS DISPLAYED																
1	2	3	4	5	6	7	8	9	10	11	12	13	14	15	16	
17	18	19	20	21	22	23	24	25	26	27	28	29	30	31	32	
33	34	35	36	37	38	39	40	41	42	43	44	45	46	47	48	
49	50	51	52	53	54	55	56	57	58	59	60	61	62	63		

PAVEMENT MARKING PATTERNS

CENTER LINE & NO-PASSING ZONE BARRIER LINES FOR TWO-LANE, TWO-WAY HIGHWAYS

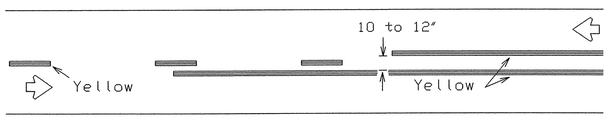

REFLECTORIZED PAVEMENT MARKINGS - PATTERN A

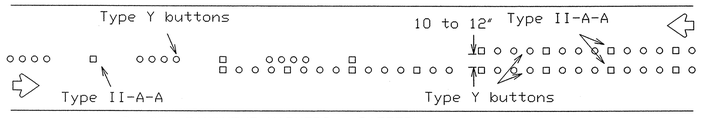

RAISED PAVEMENT MARKERS - PATTERN A

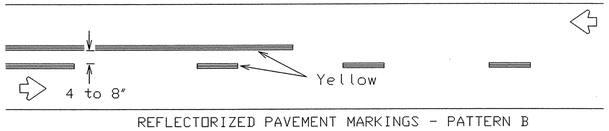

REFLECTORIZED PAVEMENT MARKINGS - PATTERN B

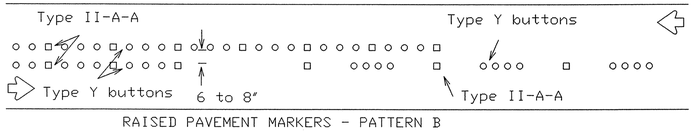

RAISED PAVEMENT MARKERS - PATTERN B

Pattern A is the TXDOT Standard, however Pattern B may be used if approved by the Engineer.
Prefabricated markings may be substituted for reflectorized pavement markings.

EDGE & LANE LINES FOR DIVIDED HIGHWAY

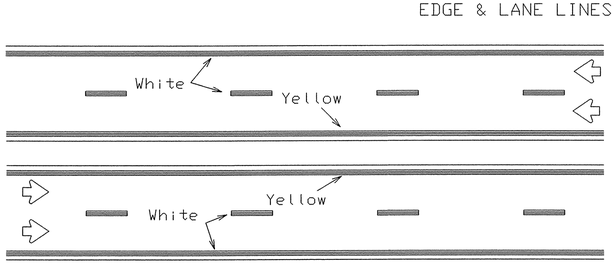

REFLECTORIZED PAVEMENT MARKINGS

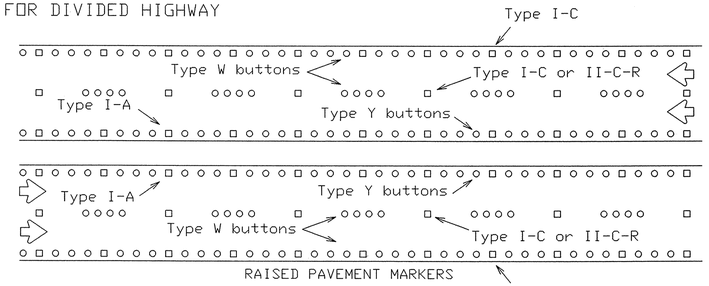

RAISED PAVEMENT MARKERS

Prefabricated markings may be substituted for reflectorized pavement markings.

LANE & CENTER LINES FOR MULTILANE UNDIVIDED HIGHWAYS

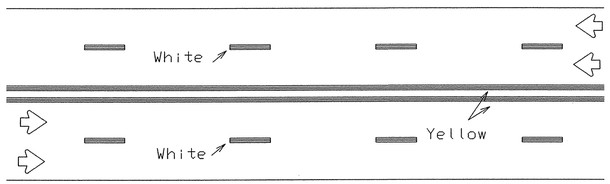

REFLECTORIZED PAVEMENT MARKINGS

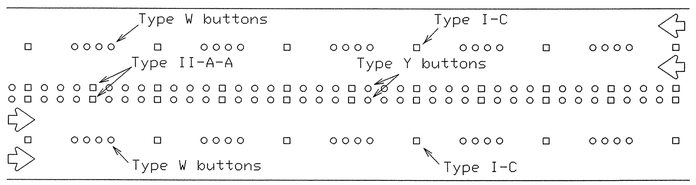

RAISED PAVEMENT MARKERS

Prefabricated markings may be substituted for reflectorized pavement markings.

TWO-WAY LEFT TURN LANE

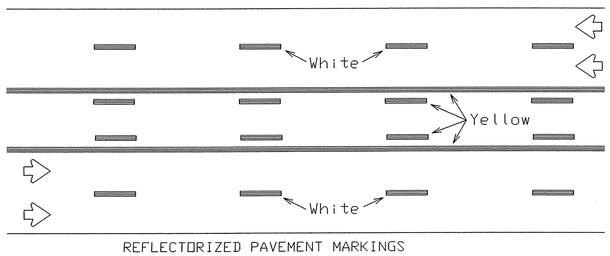

REFLECTORIZED PAVEMENT MARKINGS

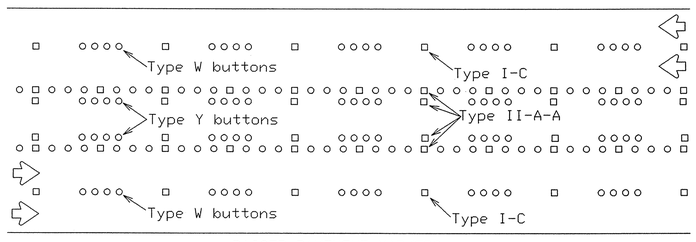

RAISED PAVEMENT MARKERS

Prefabricated markings may be substituted for reflectorized pavement markings.

STANDARD WORK ZONE PAVEMENT MARKINGS DETAILS

SOLID LINES

DOUBLE NO-PASSING LINE

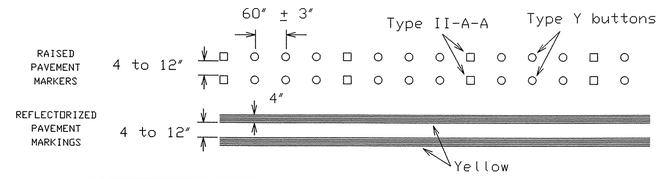

EDGE LINE OR SINGLE NO-PASSING LINE

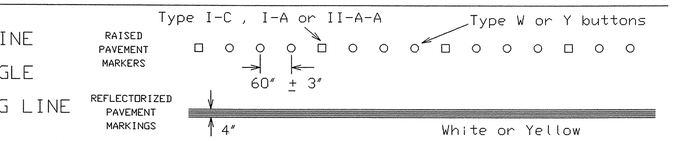

WIDE LINE

(FOR LEFT TURN CHANNELIZING LINE OR CHANNELIZING LINE USED TO DISCOURAGE LANE CHANGING.)

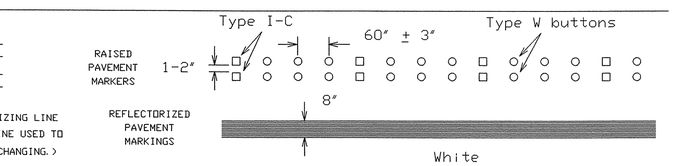

BROKEN LINE

(FOR CENTER LINE OR LANE LINE.)

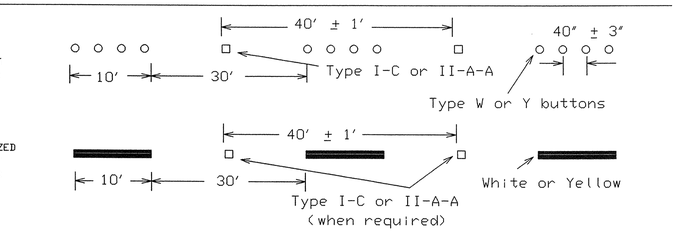

REMOVABLE MARKINGS WITH RAISED PAVEMENT MARKERS

If raised pavement markers are used to supplement REMOVABLE markings, the markers shall be applied to the top of the tape at the approximate mid length of tape used for broken lines or at 20 foot spacing for solid lines. This allows an easier removal of raised pavement markers and tape.

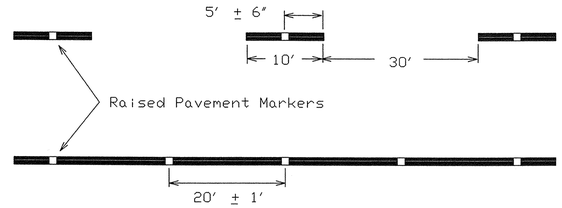

Centerline only - not to be used on edge lines

Only pre-qualified products shall be used. A copy of the 'Compliant Work Zone Traffic Control Devices List' (CWZTCD) describes pre-qualified products and their sources and may be obtained by contacting:

Standards Engineer
Traffic Operations Division - TE
Texas Department of Transportation
125 East 11th Street
Austin, Texas 78701-2483
Phone (512) 416-3120
Fax (512) 416-3299

Instructions to locate the 'CWZTCD' on TxDOT website are:

Start at website - www.dot.state.tx.us
Click on 'About TxDOT',
Click on 'Functional Organizational Chart',
Click on Traffic Operations Box,
Click on 'Compliant Work Zone Traffic Control Devices',
again click on 'Compliant Work Zone Traffic Control Devices'.
This site is printable.

Raised pavement markers used as standard pavement markings shall be from the approved products list and meet the requirements of Item 'RAISED PAVEMENT MARKERS.'

STANDARD PLANS
Texas Department of Transportation
Traffic Operations Division

BARRICADE AND CONSTRUCTION PAVEMENT MARKING PATTERNS STANDARD

11 of 12 BC(11)-03

© TxDOT		DW-LR	CK-DTN	DW-FDN	CK-CAL
REVISIONS 2-94 1-97 2-98 11-02	STATE DISTRICT	FEDERAL REGION	FEDERAL AID PROJECT		SHEET
		6			
	COUNTY		CONTROL	SECTION	JOB	HIGHWAY

C9.11 109B

PI NO: 1294-06-065

DWG NO: 1294-06-065-07A.DWG
P-200708-01

DISCLAIMER
The use of this standard is governed by the "Texas Engineering Practice Act". No warranty of any kind is made by TxDOT for any purpose whatsoever. TxDOT assumes no responsibility for the conversion of this standard to other formats or for incorrect results or damages resulting from its use.

TWILLIAMS 02/22/2008 - 9:55AM
N:_JOBS\1200-1299\1294-06-065\DWGS\1294-06-065-07A.DWG

LEVELS DISPLAYED	ACC:
1 2 3 4 5 6 7 8 9 10 11 12 13 14 15 16	
17 18 19 20 21 22 23 24 25 26 27 28 29 30 31 32	
33 34 35 36 37 38 39 40 41 42 43 44 45 46 47 48	
49 50 51 52 53 54 55 56 57 58 59 60 61 62 63	

DISCLAIMER
The use of this standard is governed by the "Texas Engineering Practice Act". No warranty of any kind is made by TxDOT for any purpose whatsoever. TxDOT assumes no responsibility for the conversion of this standard to other formats or for incorrect results or damages resulting from its use.

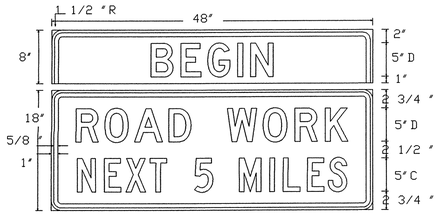

SG20-1 w/plaque
48" X 26"

Letters - Black
Numbers - Black
Border - Black
Background - Orange Refl.

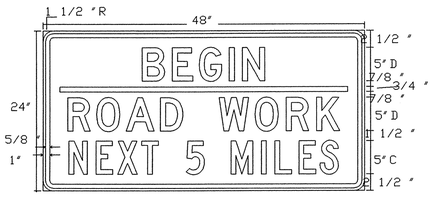

SG20-5T
48" X 24"

Letters - Black
Numbers - Black
Border - Black
Background - Orange Refl.

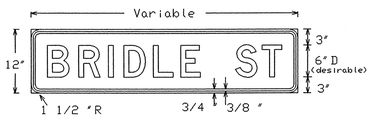

M4-9N
Variable X 12"

Letters - Black
Border - Black
Background - Orange Refl.

The M4-9R, L or S sign is to be used to detour local streets or roads that are not a State or Federal numbered highway; however, it should not be used in lieu of the M4-10 sign at the beginning of the detour or to detour State or Federal numbered routes.

Also, when the M4-9R, L or S sign is used, a sign (M4-9N) with the name of the street being detoured may be mounted above it.

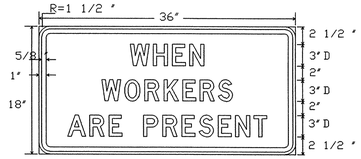

ER20-5
Plaque
36" X 18"

Letters - Black
Border - Black
Background - White Refl.

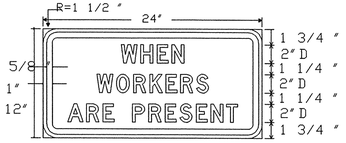

R20-5
Plaque
24" X 12"

Letters - Black
Border - Black
Background - White Refl.

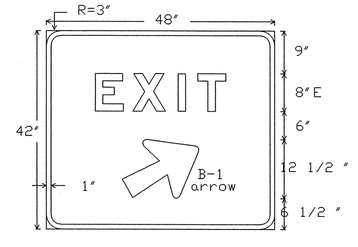

E5-1a
48" X 42"

Letters - White Refl.
Arrow - White Refl.
Border - White Refl.
Background - Green Refl.

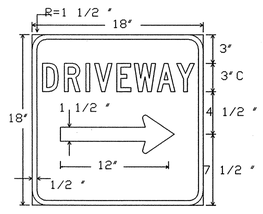

D-70a
18" X 18"

Letters - White Refl.
Symbol - White Refl.
Border - White Refl.
Background - Blue Refl.

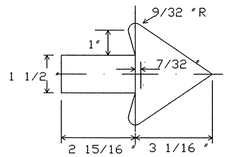

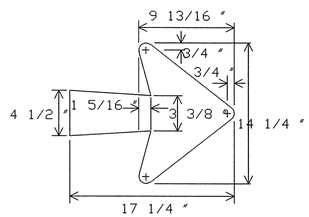

B-1 Arrow Detail

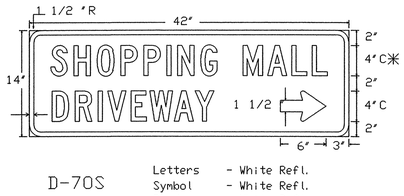

D-70S
42" X 14"

Letters - White Refl.
Symbol - White Refl.
Border - White Refl.
Background - Blue Refl.

✳Alternate first line legend for D-70S

RESTAURANT	D70R 4"C
BUSINESS	D70B 4"C
MOTEL	D70M 4"C
GAS	D70G 4"C

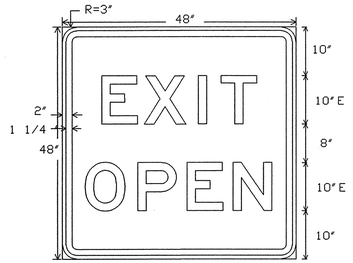

E5-2
48" X 48"

Letters - Black
Border - Black
Background - Orange Refl.

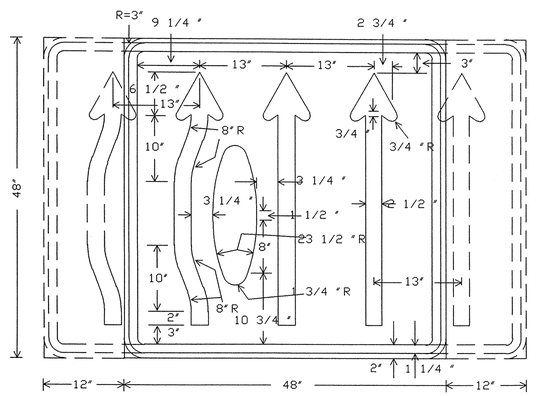

CW24-2
Var. X 48"

A mirror image may be used to show proper lane alignment.

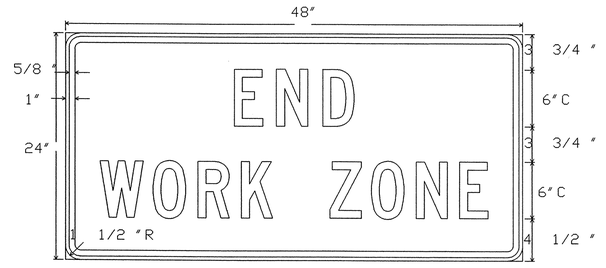

G20-2b
48" X 24"

Letters - Black
Border - Black
Background - Orange Refl.

Only pre-qualified products shall be used. A copy of the 'Compliant Work Zone Traffic Control Devices List' (CWZTCD) describes pre-qualified products and their sources and may be obtained by contacting:

Standards Engineer
Traffic Operations Division - TE
Texas Department of Transportation
125 East 11th Street
Austin, Texas 78701-2483
Phone (512) 416-3120
Fax (512) 416-3299

Instructions to locate the 'CWZTCD' on TxDOT website are:

Start at website - www.dot.state.tx.us
Click on 'About TxDOT',
Click on 'Functional Organizational Chart',
Click on Traffic Operations Box,
Click on 'Compliant Work Zone Traffic Control Devices',
again click on 'Compliant Work Zone Traffic Control Devices'.
This site is printable.

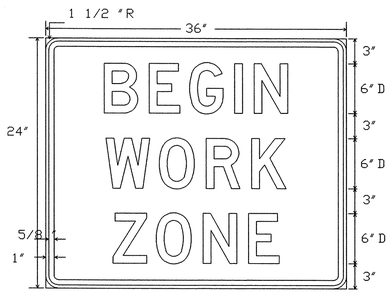

SG20-9T
36" X 24"

Letters - Black
Border - Black
Background - Orange Refl.

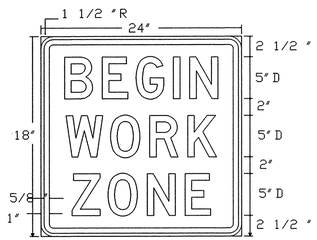

G20-9T
24" X 18"

Letters - Black
Border - Black
Background - Orange Refl.

DEPARTMENT MATERIAL SPECIFICATIONS	
PLYWOOD SIGN BLANKS	DMS-7100
ALUMINUM SIGN BLANKS	DMS-7110
FLAT SURFACE REFLECTIVE SHEETING	DMS-8300
VINYL NON-REFLECTIVE DECAL SHEETING	DMS-8320

COLOR	USAGE	REFLECTIVE SHEETING OR OTHER MATERIAL
BLUE	BACKGROUND	TYPE C (HIGH SPECIFIC INTENSITY)
RED	BACKGROUND	TYPE C (HIGH SPECIFIC INTENSITY)
GREEN	BACKGROUND	TYPE C (HIGH SPECIFIC INTENSITY)
ORANGE	BACKGROUND	TYPE E (FLUORESCENT PRISMATIC)
WHITE	BACKGROUND	TYPE C (HIGH SPECIFIC INTENSITY)
YELLOW	BACKGROUND	TYPE C (HIGH SPECIFIC INTENSITY)
BLACK	LEGEND & BORDERS	VINYL NON-REFLECTIVE DECAL SHEETING
WHITE	LEGEND & BORDERS	TYPE C (HIGH SPECIFIC INTENSITY)

STANDARD PLANS
Texas Department of Transportation
Traffic Operations Division

BARRICADE AND CONSTRUCTION REGULATORY & GUIDE SIGNS STANDARDS

12 of 12 BC(12)-03

© TxDOT	DN - GRB	CK - BAS	DW - FDN	CK - CAL

REVISIONS	STATE DISTRICT	FEDERAL REGION	FEDERAL AID PROJECT	SHEET
10-99		6		
11-02	COUNTY	CONTROL	SECTION	JOB / HIGHWAY

C9.12 109C

PI NO: 1294-06-065

DWG NO: 1294-06-065-07A.DWG
P-200708-01

TWILLIAMS 02/22/2008 - 8:56 AM
N:\WORK\1200-1299\1294-06-065\DWG\1294-06-065-07A.DWG

LEVELS DISPLAYED
1 2 3 4 5 6 7 8 9 10 11 12 13 14 15 16
17 18 19 20 21 22 23 24 25 26 27 28 29 30 31 32
33 34 35 50 63 67 68 69 40 41 42 43 44 45 46 47 48
49 50 51 52 53 54 55 56 57 58 59 60 61 62 63

ACC:

DISCLAIMER
The use of this standard is governed by the "Texas Engineering Practice Act". No warranty of any kind is made by TxDOT for any purpose whatsoever. TxDOT assumes no responsibility for the conversion of this standard to other formats or for incorrect results or damages resulting from its use.

SIGN SUPPORT DESCRIPTIVE CODES

(Descriptive Codes correspond to project estimate and quantities sheets)

SM RD SGN ASSM TY XXXXX(X)XX(X-XXXX)

Post Type

FRP = Fiberglass Reinforced Plastic Pipe (see SMD(FRP))
TWT = Thin-Walled Tubing (see SMD(TWT))
10BWG = 10 BWG Tubing (see SMD(SLIP-1) to SMD(SLIP-3))
S80 = Schedule 80 Pipe (see SMD(SLIP-1) to SMD(SLIP-3))

Number of Posts (1 or ~~2~~)

Anchor Type

UA = Universal Anchor - Concreted (see SMD(FRP) and SMD(TWT))
UB = Universal Anchor - Bolted down (see SMD(FRP) and SMD(TWT))
WA = Wedge Anchor - (see SMD(TWT))
SA = Slipbase - Concreted (see SMD(SLIP-1) to SMD(SLIP-3))
SB = Slipbase - Bolted Down (see SMD(SLIP-1) to SMD(SLIP-3))

Sign Mounting Designation

P = Prefab. "Plain" (see SMD(SLIP-1) to (3), SMD(TWT), SMD(FRP))
T = Prefab. "T" (see SMD(SLIP-1) to (3), SMD(TWT))
U = Prefab. "U" (see SMD(SLIP-1) to (3))

IF REQUIRED
1EXT or 2EXT = Number of Extensions (see SMD(SLIP-1) to (3), SMD(TWT))
BM = Extruded Wind Beam (see SMD(SLIP-1) to (3))
WC = 1.12 #/ft Wing Channel (see SMD(SLIP-1) to (3))
EXAL = Extruded Aluminum sign panels (see SMD(SLIP-3))

REQUIRED CLEARANCE FOR BREAKAWAY SUPPORT

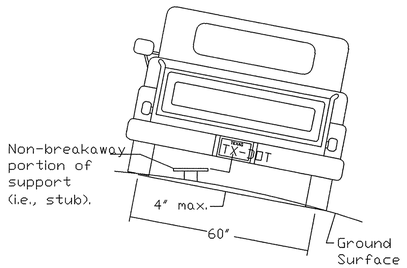

To avoid vehicle undercarriage snagging, any substantial remains of a breakaway support, when it is broken away, should not project more than 4 inches above a 60-inch chord (i.e., typical space between wheel paths).

SIGN LOCATION

PAVED SHOULDERS

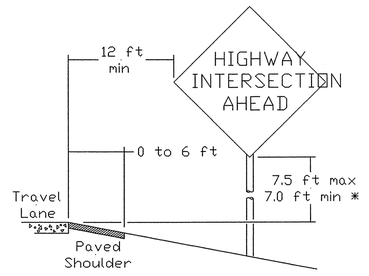

LESS THAN 6 FT. WIDE

When the shoulder is 6 ft. or less in width, the sign must be placed at least 12 ft. from the edge of the travel lane.

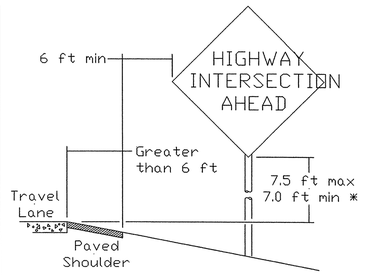

GREATER THAN 6 FT. WIDE

When the shoulder is greater than 6 ft in width, the sign must be placed at least 6 ft. from the edge of the shoulder.

BEHIND BARRIER

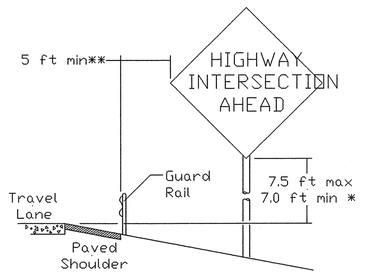

BEHIND GUARDRAIL

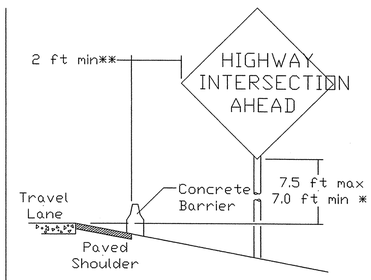

BEHIND CONCRETE BARRIER

**Sign clearance based on distance required for proper guard rail or concrete barrier performance.

T-INTERSECTION

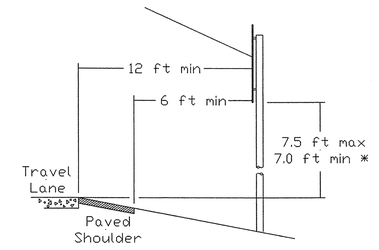

When this sign is needed at the end of a two-lane, two way roadway, the right edge of the sign should be in line with the centerline of the roadway. Place as close to ROW as practical.

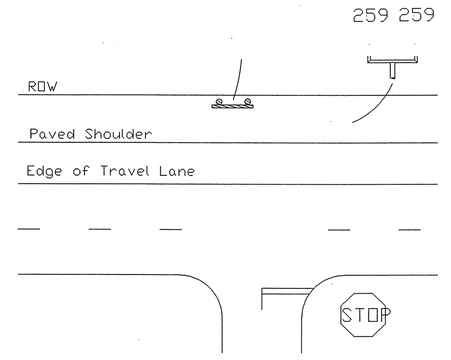

* Signs shall be mounted using the following condition that results in the greatest sign elevation:

(1) a minimum of 7 to a maximum of 7.5 feet above the edge of the travel lane or

(2) a minimum of 7 to a maximum of 7.5 feet above the grade at the base of the support when sign is installed on the backslope.

The maximum values may be increased when directed by the Engineer.

See the Traffic Operations Division website for detailed drawings of sign clamps, Texas Universal Triangular Slipbase System components and Wedge Anchor System components.

The website address is:
ftp://ftp.dot.state.tx.us/pub/txdot-info/cmd/cserve/standard/traffic/slip.pdf

No more than 2 sign posts should be located within a 7 ft. circle.

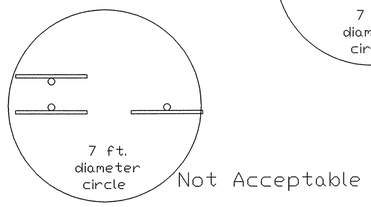

Not Acceptable

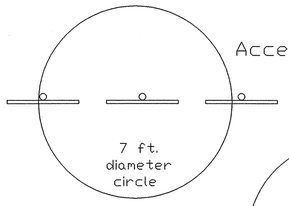

Acceptable

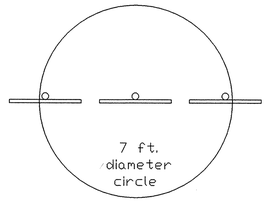

Not Acceptable

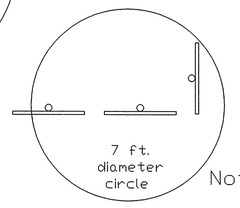

Not Acceptable

TYPICAL SIGN ATTACHMENT DETAIL

Single Signs

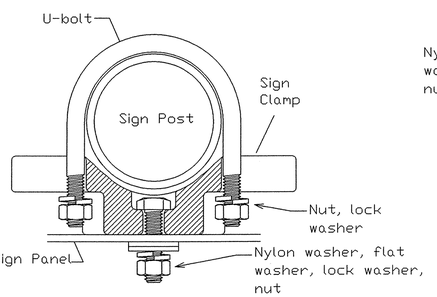

Back-to-Back Signs

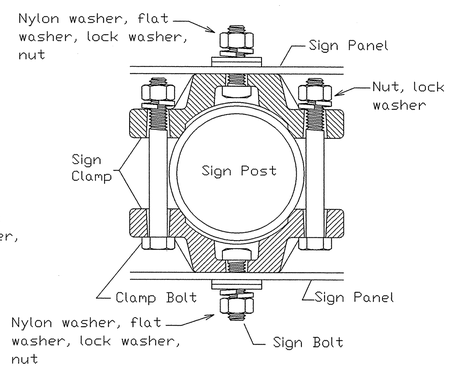

Bolts used to mount sign panels to the clamp are 5/16-18 UNC galvanized square head with nut, nylon washer, flat washer and lock washer. The bolt length is 1 inch for aluminum and 1 3/4 inch for plywood signs.

When two sign clamps are used to mount signs back-to-back, use a 5/16-18 UNC galvanized hex head per ASTM A307 with nut and helical-spring lock washer. The approximate bolt lengths for various post sizes and sign clamp types are given in the table at right. The bolt length may need to be adjusted depending upon field conditions.

Sign clamps may be either the specific size clamp or the universal clamp.

Pipe Diameter	Approximate Bolt Length	
	Specific Clamp	Universal Clamp
2" nominal	3"	3 or 3 1/2"
2 1/2" nominal	3 or 3 1/2"	3 1/2 or 4"
3" nominal	3 1/2 or 4"	4 1/2"

SIGNS WITH PLAQUES

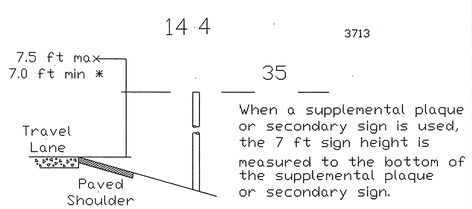

When a supplemental plaque or secondary sign is used, the 7 ft sign height is measured to the bottom of the supplemental plaque or secondary sign.

MEDIANS

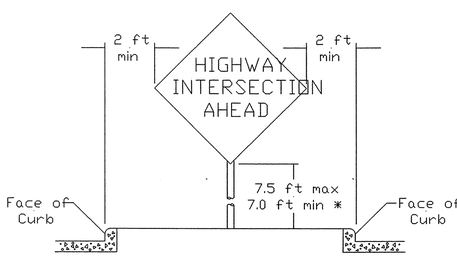

RESTRICTED RIGHT-OF-WAY

(When 6 ft min. is not possible.)

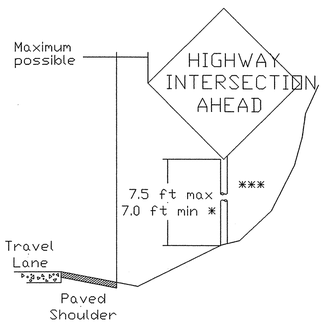

Right-of-way restrictions may be created by rocks, water, vegetation, forest, buildings, a narrow island, or other factors.

In situations where a lateral restriction prevents the minimum horizontal clearance from the edge of the travel lane, signs should be placed as far from the travel lane as practical.

*** Post may be shorter if protected by guardrail or if Engineer determines the post could not be hit due to extreme slope.

STANDARD PLANS
TEXAS DEPARTMENT OF TRANSPORTATION
Traffic Operations Division

SIGN MOUNTING DETAILS SMALL ROADSIDE SIGNS GENERAL NOTES & DETAILS

SMD(GEN)-02

© TxDOT July 2002	DN: BAS	CK: GRB	DW: FDN	CK: CAL
REVISIONS	STATE DISTRICT	FEDERAL REGION	FEDERAL AID PROJECT	SHEET
		6		
	COUNTY	CONTROL	SECTION	JOB	HIGHWAY

C10,01 26A

PI NO: 1294-06-065

DWG NO: 1294-06-065-07A.DWG

P-200708-01

LEVELS DISPLAYED

															ACC:
1	2	3	4	5	6	7	8	9	10	11	12	13	14	15	16
17	18	19	20	21	22	23	24	25	26	27	28	29	30	31	32
33	34	35	36	37	38	39	40	41	42	43	44	45	46	47	48
49	50	51	52	53	54	55	56	57	58	59	60	61	62	63	

TWILLIAMS 02/22/2008 - 9:56AM
N:\WORK\1200-1299\1294-06-065\DWG\1294-06-065-07A.DWG

DISCLAIMER
The use of this standard is governed by the "Texas Engineering Practice Act". No warranty of any kind is made by TxDOT for any purpose whatsoever. TxDOT assumes no responsibility for the conversion of this standard to other formats or for incorrect results or damages resulting from its use.

Texas Universal Triangular Slipbase System

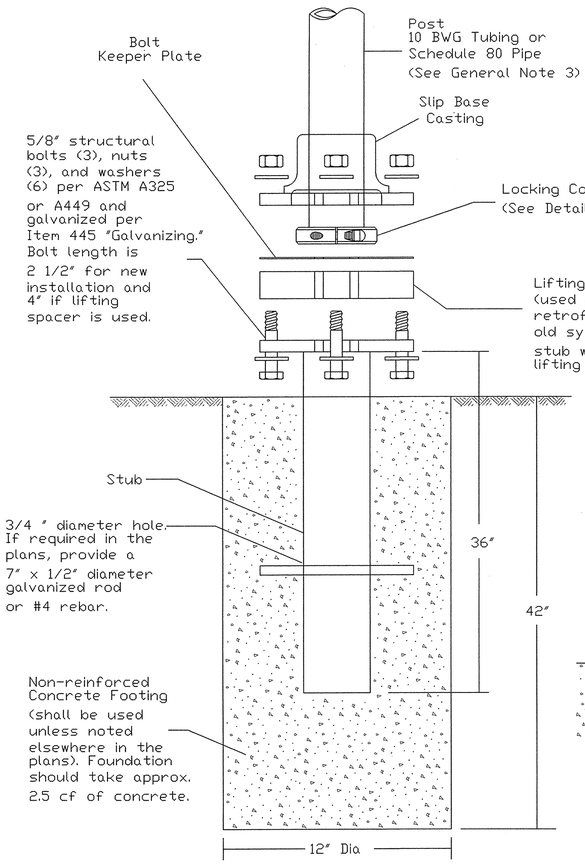

SM RD SGN ASSM TY XXXXX(X)SA(X-XXXX)

Concrete anchor consists of 5/8" diameter stud bolt with UNC series bolt threads on the upper end. Heavy hex nut per ASTM A563, and hardened washer per ASTM F436. The stud bolt shall have minimum yield and ultimate tensile strengths of 50 and 75 KSI, respectively. Nuts, bolts and washers shall be galvanized per Item 445, "Galvanizing." Top of bolt shall extend at least flush with top of the nut when installed. The anchor, when installed in 4000 psi normal-weight concrete with a 5 1/2" minimum embedment, shall have a minimum allowable tension and shear of 3900 and 3100 psi, respectively. Adhesive type anchors shall have stud bolts installed with Type III epoxy per DMS-6100, "Epoxies and Adhesives." Adhesive anchors may be loaded after adequate epoxy cure time, per the manufacturer's recommendations.

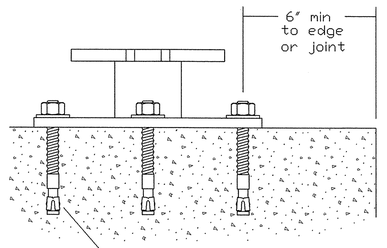

SM RD SGN ASSM TY XXXXX(X)SB(X-XXXX)

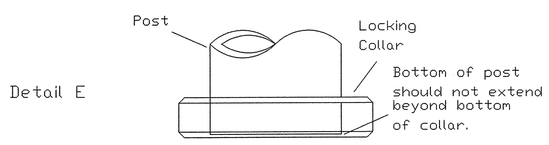

Detail E

ROLL PIN (Optional)

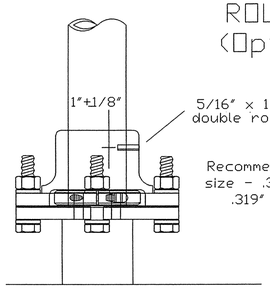

If shown in plans, the Engineer may require the roll pin to be installed to reduce possible sign rotation.

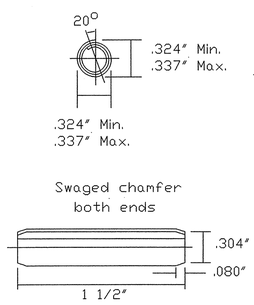

DOUBLE ROLL PIN DETAIL

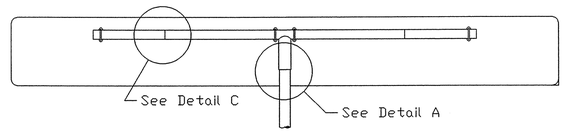

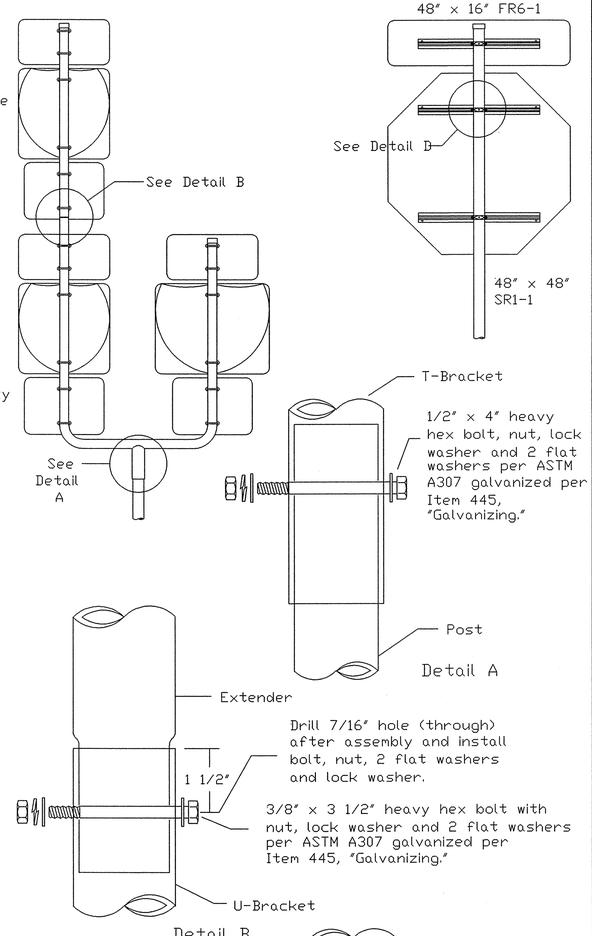

Detail A

Detail B

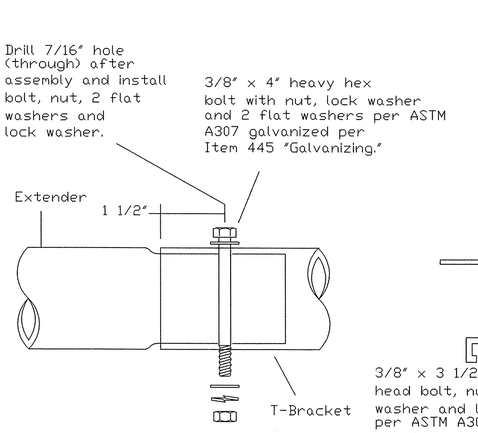

Detail C

Splices shall only be allowed behind the sign substrate.

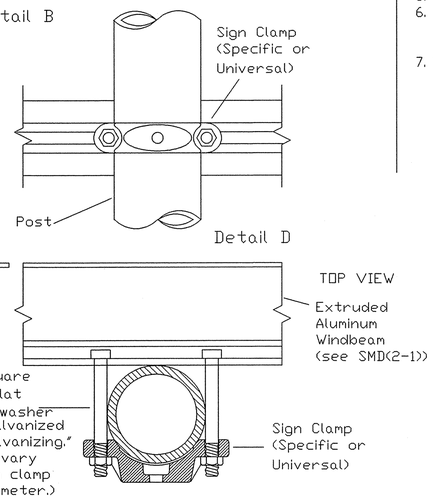

Detail D

GENERAL NOTES:
1. Finished components, except posts (10 BWG Tubing and Schedule 80 Pipe) and clamps, shall be permanently marked to indicate manufacturer. Method, design, and location of marking are subject to approval of the TxDOT Traffic Standards Engineer.
2. Except for posts (10 BWG Tubing and Schedule 80 Pipe), clamps, nuts and bolts, all components shall be prequalified. A list of prequalified vendors may be obtained from the TxDOT Traffic Standards Engineer, or the Traffic Operations Division website. The website address is: http://www.dot.state.tx.us/insdtdot/orgchart/trf/trfeng/
3. Material used as post with this system shall conform to the following specifications:
   10 BWG Tubing (2.875" outside diameter)
   - 0.134" nominal wall thickness
   - Seamless or electric-resistance welded steel tubing or pipe
   - Steel shall be HSLAS Gr 55 per ASTM A1011 or ASTM A1008
   - Other steels may be used if they meet the following:
     - 55,000 PSI minimum yield strength
     - 70,000 PSI minimum tensile strength
     - 20% minimum elongation in 2"
   - Wall thickness (uncoated) shall be within the range of 0.122" to 0.138"
   - Outside diameter (uncoated) shall be within the range of 2.867" to 2.883"
   - Galvanization per ASTM A123 or ASTM A653 G210. For precoated steel tubing (ASTM A653), recoat tube outside diameter weld seam by metallizing with zinc wire per ASTM B833.

   Schedule 80 Pipe (2.875" outside diameter)
   - 0.276" nominal wall thickness
   - Steel tubing per ASTM A500 Gr C
   - Other seamless or electric-resistance welded steel tubing or pipe with equivalent outside diameter and wall thickness may be used if they meet the following:
     - 46,000 PSI minimum yield strength
     - 62,000 PSI minimum tensile strength
     - 21% minimum elongation in 2"
   - Wall thickness (uncoated) shall be within the range of 0.248" to 0.304"
   - Outside diameter (uncoated) shall be within the range of 2.855" to 2.895"
   - Galvanization per ASTM A123
4. See the Traffic Operations Division website for detailed drawings of sign clamps and Texas Universal Triangular Slipbase System components. The website address is: ftp://ftp.dot.state.tx.us/pub/txdot-info/cmd/cserve/standard/traffic/slip.pdf
5. Sign supports shall not be spliced except where shown. Sign support posts shall not be spliced.

ASSEMBLY PROCEDURE

Foundation
1. Prepare 12-inch diameter by 42-inch deep hole. If solid rock is encountered, the depth of the foundation may be reduced such that it is embedded a minimum of 18 inches into the solid rock.
2. Thoroughly wet and mix concrete in a container. Place concrete into hole until it is approximately flush with the ground.
3. Push the pipe end of the slip base stub into the center of the concrete. Rotate the stub back and forth while pushing it down into the concrete to assure good contact between the concrete and stub. Continue to work the stub into the concrete until it is between 2 to 4 inches above the ground. The upper value assures that an impacting vehicle should not snag on the footing. The lower value provides clearance for assembly.
4. Plumb the stub by using a torpedo level on the slip plate. Allow concrete adequate time to set.

Support
1. Cut support so that the bottom of the sign will be 7 to 7.5 feet above the edge of the travelway (i.e., edge of the closest lane) when slip plate is below the edge of pavement or 7 to 7.5 feet above slip plate when the slip plate is above the edge of the travelway. The cut shall be plumb and straight.
2. Attach sign to support using connections shown. When multiple signs are installed on the same support, ensure the minimum clearance between each sign is maintained. See SMD(SLIP-2) for clearances based on sign types.
3. Slide the slipbase casting onto the lower end of the sign support.
4. Drive a chisel or a flat-blade screwdriver into the cut on the locking collar to slightly pry the collar open. Slide the collar onto the end of the pipe so the edge of the pipe is between the face of the locking collar and the end of the edge bevel. A dead-blow hammer may be useful in positioning the collar correctly. Remove the tool used to pry the collar open. Torque the allen bolt to 60 foot-pounds (720 inch-pounds). DO NOT OVERTIGHTEN.
5. Place and align bolt keeper plate on slip plate and lift assembled sign and support into position.
6. Place one washer on each bolt and insert them through keeper plate and the notches on the slip plate and casting. After inserting each bolt, place one washer and a nut on the bolt and hand-tighten all three.
7. The breakaway features of this system will work when all three bolts are tightened between 40 to 80 foot-pounds (480 to 960 inch-pounds). The Engineer shall determine the appropriate bolt torque for each project. Tighten all bolts by working around the support in approximately 10 foot-pound increments to assure a balanced tension in the bolts. All three bolts shall be torqued the same. DO NOT OVERTIGHTEN.

STANDARD PLANS
Texas Department of Transportation
Traffic Operations Division

SIGN MOUNTING DETAILS SMALL ROADSIDE SIGNS TRIANGULAR SLIPBASE SYSTEM

SMD(SLIP-1)-02

© TxDOT July 2002	DN-BAS	CK-GRB	DW-FDN	CK-CAL
REVISIONS	STATE DISTRICT	FEDERAL REGION	FEDERAL AID PROJECT	SHEET
		6		
	COUNTY	CONTROL	SECTION	JOB	HIGHWAY

C10.02 26B

PI NO: 1294-06-065

DWG NO: 1294-06-065-07A.DWG
P-200708-01

LEVELS DISPLAYED

	1	2	3	4	5	6	7	8	9	10	11	12	13	14	15	16	ACC:
1	2	3	4	5	6	7	8	9	10	11	12	13	14	15	16	B2	
17	18	19	20	21	22	23	24	25	26	27	28	29	30	31	B2		
33	34	35	36	37	38	39	40	41	42	43	44	45	46	47	48		
49	50	51	52	53	54	55	56	57	58	59	60	61	62	E3			

TWILLIAMS 02/22/2008 - 8:56AM
N:\JOBS\1200-1299\1294-06-065\DWG\1294-06-065-07A.DWG

DISCLAIMER
The use of this standard is governed by the "Texas Engineering Practice Act". No warranty of any kind is made by TxDOT for any purpose whatsoever. TxDOT assumes no responsibility for the conversion of this standard to other formats or for incorrect results or damages resulting from its use.

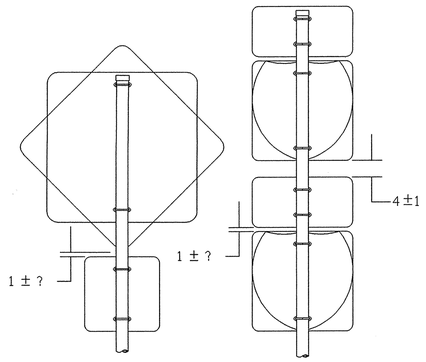

SM RD SGN ASSM TY XXXXX(1)XX(P)

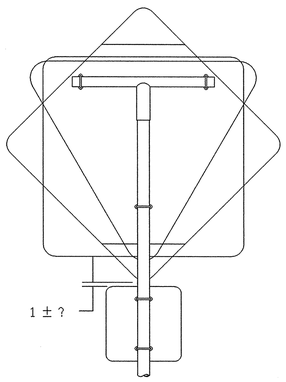

SM RD SGN ASSM TY XXXXX(1)XX(T)

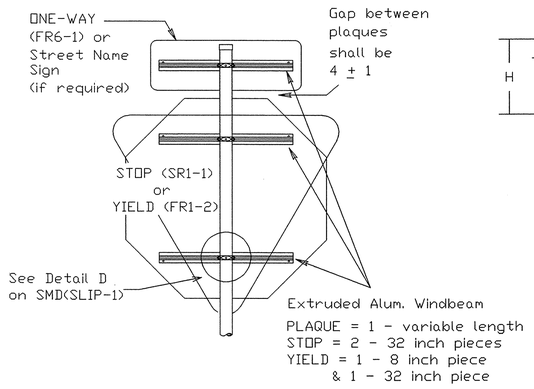

SM RD SGN ASSM TY XXXXX(1)XX(P-BM)

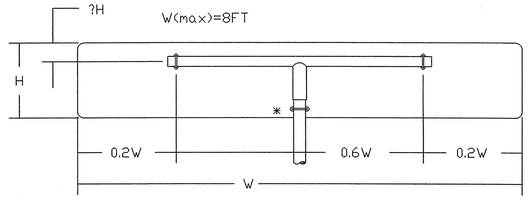

SM RD SGN ASSM TY XXXXX(1)XX(T)
(* - See Note 13)

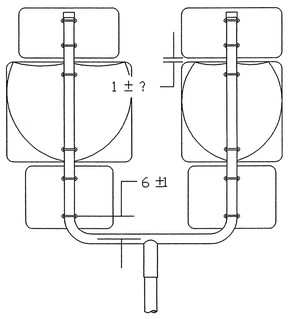

SM RD SGN ASSM TY XXXXX(1)XX(U)

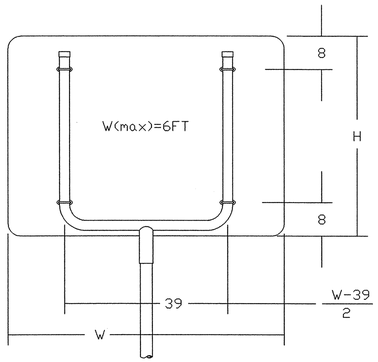

SM RD SGN ASSM TY XXXXX(1)XX(U)

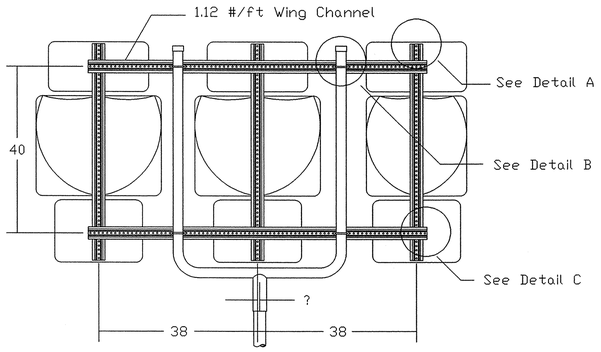

SM RD SGN ASSM TY XXXXX(1)XX(U-WC)
(See Note 12)

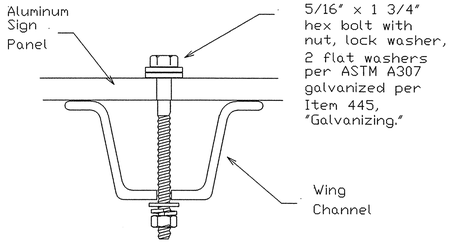

Top View

Detail A

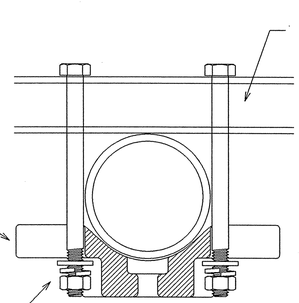

Top View

Detail B

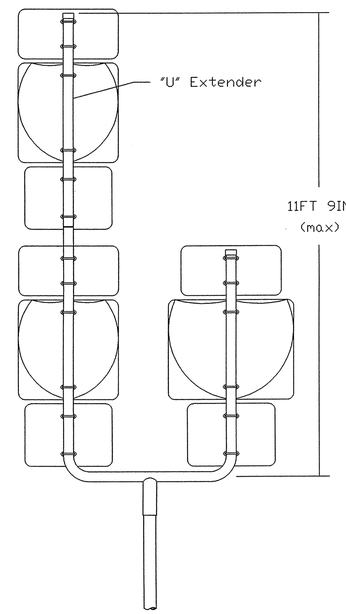

SM RD SGN ASSM TY S80(1)XX(U-1EXT)

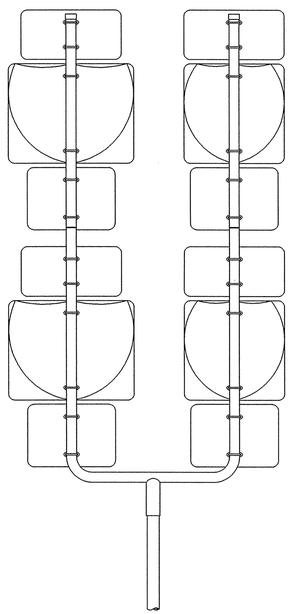

SM RD SGN ASSM TY S80(1)XX(U-2EXT)

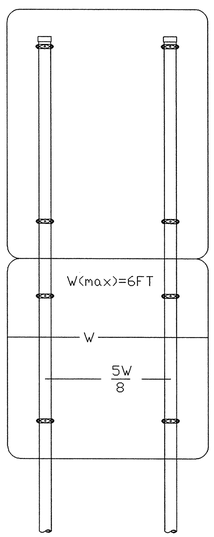

SM RD SGN ASSYM TY XXXXX(2)XX(P)

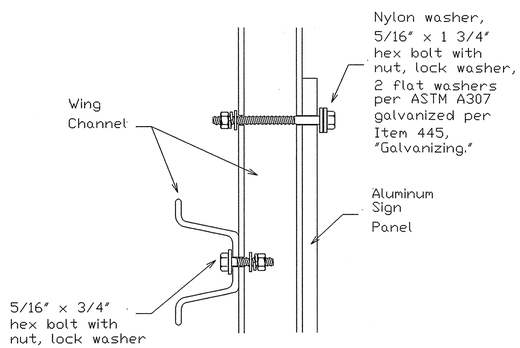

Side View

Detail C

GENERAL NOTES:

1.

SIGN SUPPORT	# OF POSTS	MAX. SIGN AREA
10 BWG	1	16 SF
10 BWG	2	32 SF
Sch 80	1	32 SF
Sch 80	2	64 SF

2. The Engineer may require that a Schedule 80 post be used in place of a 10 BWG where a sign height is abnormally high due to a fill slope.
3. Sign supports shall not be spliced except where shown. Sign support posts shall not be spliced.
4. Aluminum sign blanks shall conform to Departmental Material Specifications DMS-7110 and shall have the following minimum thicknesses: 0.080 for signs less than 7.5 sq. ft., 0.100 for signs 7.5 to 15 sq. ft., and 0.125 for signs greater than 15 sq. ft.
5. Plywood signs shall conform to Departmental Material Specification DMS-7100 and shall be 5/8 inches thick.
6. Signs that require specific supports due to reasons in addition to windloading are indicated on the "REQUIRED SUPPORT" table on this sheet.
7. For horizontal rectangular signs, T-brackets are used for signs 24 inches or less in height. U-brackets are used for signs of greater height.
8. When two triangular slipbase supports are used to support a single sign, they shall not be "rigidly" connected to each other except through the sign panel. This will allow each support to act independently when impacted by an errant vehicle.
9. Wing channel shall meet ASTM A 1011 SS Gr 50 and be galvanized per ASTM A 123.
10. Excess pipe, winged channel, or windbeam shall be cut off so that it does not extend beyond the sign panel (i.e., excess support shall not be visible when the sign is viewed from the front.) Repair galvanized coating at cut support ends per Item 445, "Galvanizing."
11. The Engineer may allow the use of an expanded foam foundation. A list of approved suppliers of expanding foam may be obtained from the Traffic Operations Division (TRF) or from the TRF website. The website address is: http://www.dot.state.tx.us/insdtdot/orgchart/trf/trfeng/
12. Additional route markers may be added vertically, provided the total sign area does not exceed the maximum allowable amount per Note 1.
13. Additional sign clamp required on the "T-bracket" post for 24 inch high signs. Place the clamp 3 inches above bottom of sign when possible.

REQUIRED SUPPORT

	SIGN DESCRIPTION	SUPPORT
Regulatory	48-inch STOP sign (SR1-1)	TY 10BWG(1)XX(T) TY 10BWG(1)XX(P-BM)
	60-inch YIELD sign (FR1-2)	TY 10BWG(1)XX(T) TY 10BWG(1)XX(P-BM)
	48x16-inch ONE-WAY sign (FR6-1)	TY 10BWG(1)XX(T) TY 10BWG(1)XX(P-BM)
	36x48, 48x36, and 48x48-inch signs	TY 10BWG(1)XX(T)
	48x60-inch signs	TY S80(1)XX(T)
Warning	48x48-inch signs (diamond or square)	TY 10BWG(1)XX(T)
	48x60-inch signs	TY S80(1)XX(T)
	48-inch Advance School X-ing sign (SS1-1)	TY 10BWG(1)XX(T)
	48-inch School X-ing sign (SS2-1)	TY 10BWG(1)XX(T)
	Large Arrow sign (W1-6 & W1-7)	TY 10BWG(1)XX(T)

LEVELS DISPLAYED

																ACC:
1	2	3	4	5	6	7	8	9	10	11	12	13	14	15	16	
17	18	19	20	21	22	23	24	25	26	27	28	29	30	31	32	
33	34	35	36	37	38	39	40	41	42	43	44	45	46	47	48	
49	50	51	52	53	54	55	56	57	58	59	60	61	62	63		

STANDARD PLANS
Texas Department of Transportation
Traffic Operations Division

SIGN MOUNTING DETAILS SMALL ROADSIDE SIGNS TRIANGULAR SLIPBASE SYSTEM

SMD(SLIP-2)-02

© TxDOT July 2002

DN-BAS	CK-GRB	DW-FDN	CK-CAL

REVISIONS	STATE DISTRICT	FEDERAL REGION	FEDERAL AID PROJECT				SHEET
		6					
	COUNTY		CONTROL	SECTION	JOB		HIGHWAY

C10.03 26C

PI NO: 1294-06-065

DWG NO: 1294-06-065-07A.DWG
P-200708-01

TIMWILLIAMS 05/22/2008 - 9:56:41
N:\WORK\1200-1299\1294-06-065\DWG\1294-06-065-07A.DWG

DISCLAIMER
The use of this standard is governed by the "Texas Engineering Practice Act". No warranty of any kind is made by TxDOT for any purpose whatsoever. TxDOT assumes no responsibility for the conversion of this standard to other formats or for incorrect results or damages resulting from its use.

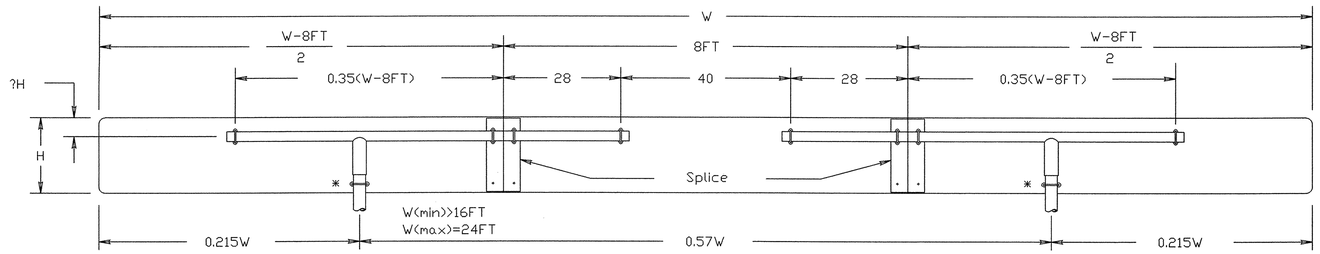

SM RD SGN ASSM TY XXXXX(2)XX(T-2EXT)
(* - See Note 13)

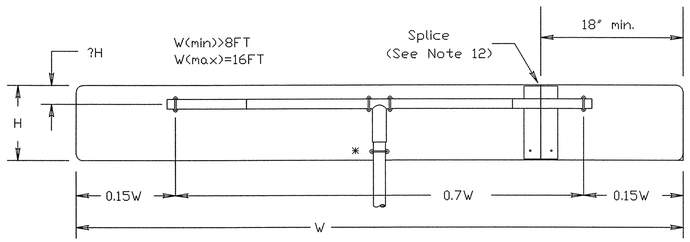

SM RD SGN ASSM TY XXXXX(1)XX(T-2EXT)
(* - See Note 13)

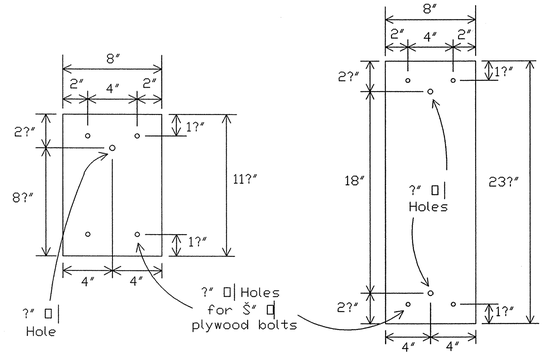

Splice Plates

Splice plates shall be 1/8 " steel plate (ASTM A36) or 1/8 " aluminum plate (ASTM B209 ALLOY 6061-T6 or 5052-H38). Steel shall be galvanized in accordance with ASTM A123.

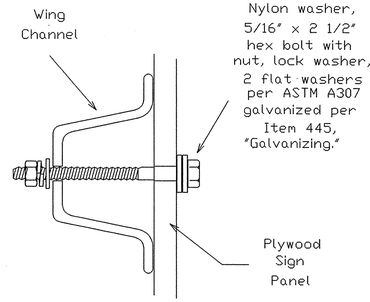

Side View

Detail B

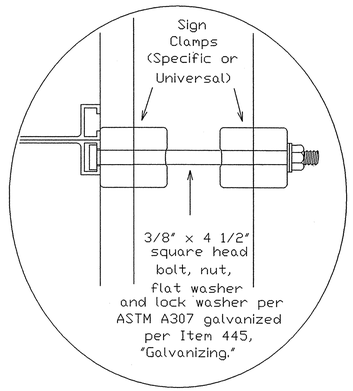

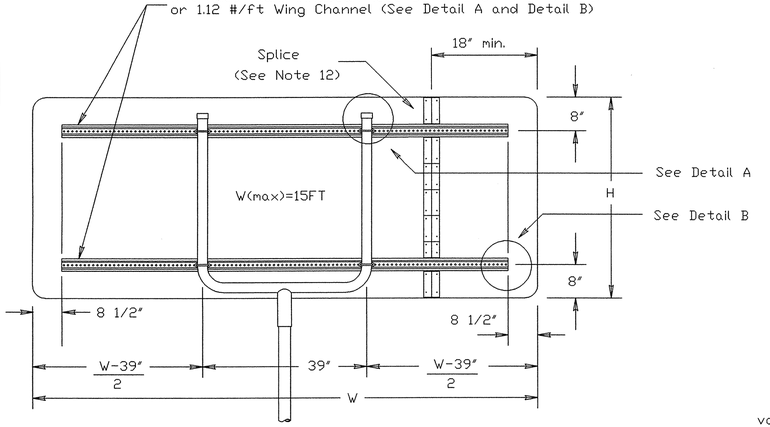

SM RD SGN ASSM TY XXXXX(1)XX(U-XX)

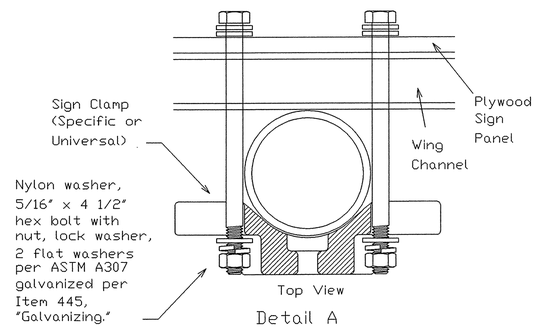

Detail A

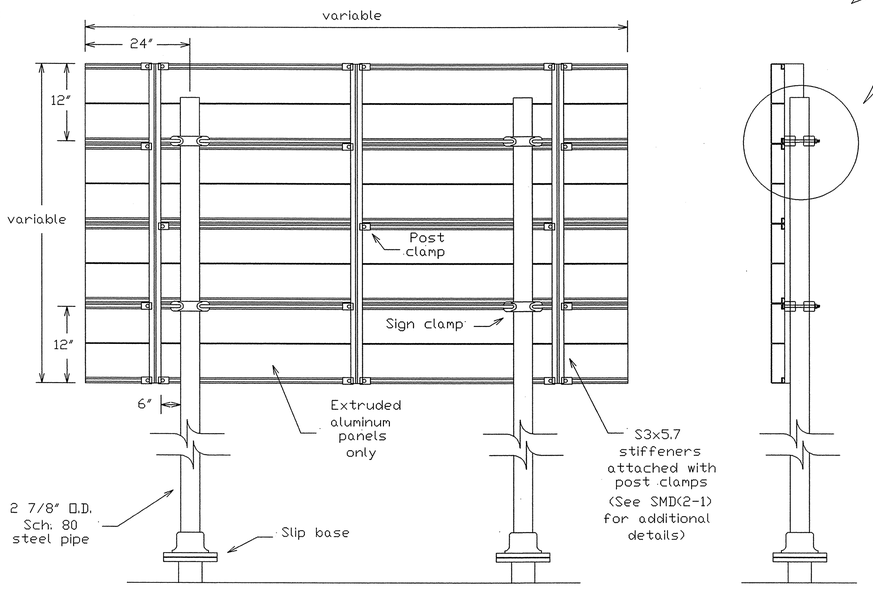

Typical Extruded Aluminum Sign Mount

SM RD SGN ASSM TY S80(2)XX(P-EXAL)

GENERAL NOTES:

SIGN SUPPORT	# OF POSTS	MAX. SIGN AREA
10 BWG	1	16 SF
10 BWG	2	32 SF
Sch 80	1	32 SF
Sch 80	2	64 SF

1. The Engineer may require that a Schedule 80 post be used in place of a 10 BWG where a sign height is abnormally high due to a fill slope.
2. Sign supports shall not be spliced except where shown. Sign support posts shall not be spliced.
3. Aluminum sign blanks shall conform to Departmental Material Specifications DMS-7110 and shall have the following minimum thicknesses: 0.080 for signs less than 7.5 sq. ft., 0.100 for signs 7.5 to 15 sq. ft., and 0.125 for signs greater than 15 sq. ft.
4. Plywood signs shall conform to Departmental Material Specification DMS-7100 and shall be 5/8 inches thick.
5. Signs that require specific supports due to reasons in addition to windloading are indicated on the "REQUIRED SUPPORT" table on this sheet.
6. For horizontal rectangular signs, T-brackets are used for signs 24 inches or less in height. U-brackets are used for signs of greater height.
7. When two triangular slipbase supports are used to support a single sign, they shall not be "rigidly" connected to each other except through the sign panel. This will allow each support to act independently when impacted by an errant vehicle.
8. Wing channel shall meet ASTM A 1011 SS Gr 50 and be galvanized per ASTM A 123.
9. Excess pipe, winged channel, or windbeam shall be cut off so that it does not extend beyond the sign panel (i.e., excess support shall not be visible when the sign is viewed from the front.) Repair galvanized coating at cut support ends per Item 445, "Galvanizing."
10. The Engineer may allow the use of an expanded foam foundation. A list of approved suppliers of expanding foam may be obtained from the Traffic Operations Division (TRF) or from the TRF website. The website address is: http://www.dot.state.tx.us/insdtdot/orgchart/trf/trfeng/
11. Sign blanks shall be the sizes and shapes shown on the plans. Unless otherwise shown, no panel on multi-panel plywood signs shall have a dimension less than 18 inches. Plywood signs 4 feet by 8 feet or smaller in either dimension shall be of one piece construction.
12. Additional sign clamp required on the "T-bracket" post for 24 inch high signs. Place the clamp 3 inches above bottom of sign when possible.

	REQUIRED SUPPORT	
	SIGN DESCRIPTION	SUPPORT
Regulatory	48-inch STOP sign (SR1-1)	TY 10BWG(1)XX(T) TY 10BWG(1)XX(P-BM)
	60-inch YIELD sign (FR1-2)	TY 10BWG(1)XX(T) TY 10BWG(1)XX(P-BM)
	48x16-inch ONE-WAY sign (FR6-1)	TY 10BWG(1)XX(T) TY 10BWG(1)XX(P-BM)
	36x48, 48x36, and 48x48-inch signs	TY 10BWG(1)XX(T)
	48x60-inch signs	TY S80(1)XX(T)
Warning	48x48-inch signs (diamond or square)	TY 10BWG(1)XX(T)
	48x60-inch signs	TY S80(1)XX(T)
	48-inch Advance School X-ing sign (SS1-1)	TY 10BWG(1)XX(T)
	48-inch School X-ing sign (SS2-1)	TY 10BWG(1)XX(T)
	Large Arrow sign (W1-6 & W1-7)	TY 10BWG(1)XX(T)

STANDARD PLANS
Texas Department of Transportation
Traffic Operations Division

SIGN MOUNTING DETAILS SMALL ROADSIDE SIGNS TRIANGULAR SLIPBASE SYSTEM

SMD(SLIP-3)-02

© TxDOT July 2002	DN-BAS	CK-GRB	DW-FDN	CK-CAL
REVISIONS	STATE DISTRICT: 6	FEDERAL REGION	FEDERAL AID PROJECT	SHEET
	COUNTY	CONTROL	SECTION	JOB / HIGHWAY

C10.04 26D

PI NO: 1294-06-065

DWG NO: 1294-06-065-07A.DWG
P-200708-01

TWILLIAMS 02/22/2008 - 9:56AM
N:\JOBS\1200-1299\1294-06-065\DWG\1294-06-065-07A.DWG

ACC:
LEVELS DISPLAYED
1 2 3 4 5 6 7 8 9 10 11 12 13 14 15 16
17 18 19 20 21 22 23 24 25 26 27 28 29 30 31 32
33 34 35 36 37 38 39 40 41 42 43 44 45 46 47 48
49 50 51 52 53 54 55 56 57 58 59 60 61 62 63

DISCLAIMER
The use of this standard is governed by the "Texas Engineering Practice Act". No warranty of any kind is made by TxDOT for any purpose whatsoever. TxDOT assumes no responsibility for the conversion of this standard to other formats or for incorrect results or damages resulting from its use.

Wedge Anchor System

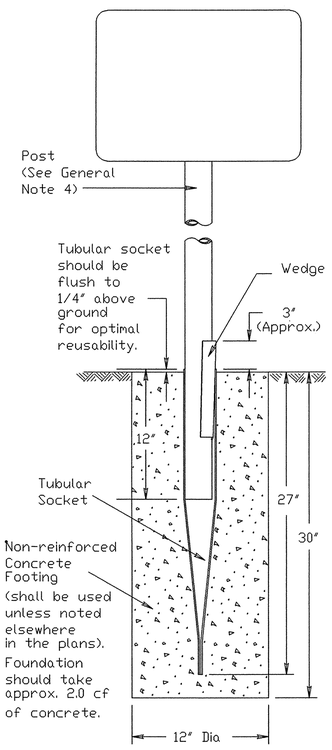

SM RD SGN ASSM TY TWT(X)WA(P)

Universal Anchor System with Thin-Walled Tubing Post

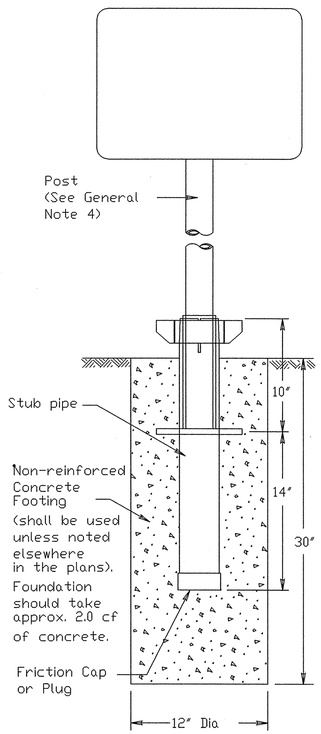

SM RD SGN ASSM TY TWT(X)UA(P)

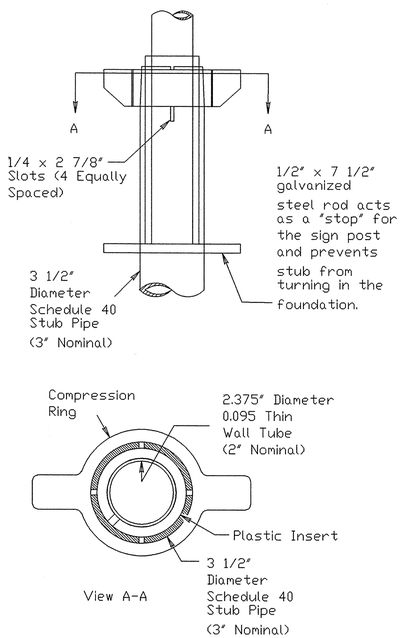

Plastic insert must be used when using the TWT with either the Universal Anchor System or the Bolt Down Universal Anchor System. The insert should be approx. 10" long and cover the tubing from just above the top of the stub pipe to the bottom of the sign post when using the Universal Anchor System. The insert should be cut to approx. 4 1/2" when used with the Bolt Down Universal Anchor System.

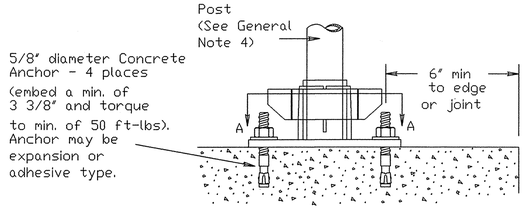

Concrete anchor consists of 5/8" diameter stud bolt with UNC series bolt threads on the upper end. A heavy hex nut per ASTM A563 and hardened washer per ASTM F436. The stud bolt shall have minimum yield and ultimate tensile strengths of 50 and 75 ksi, respectively. Nuts, bolts and washers shall be galvanized per Item 445, "Galvanizing." Top of bolt shall extend at least flush with top of nut when installed. The anchor, when installed in 4000 psi normal-weight concrete with a 3 3/8" minimum embedment, shall have a minimum allowable tension and shear of 2450 and 1525 psi, respectively. Adhesive type anchors shall have stud bolts installed with Type III epoxy per DMS-6100, "Epoxies and Adhesives." Adhesive anchors may be loaded after adequate epoxy cure time per the manufacturer's recommendations.

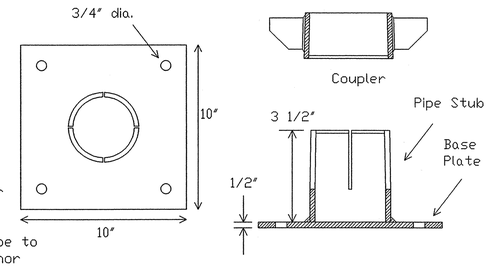

SM RD SGN ASSM TY TWT(X)UB(P)

GENERAL NOTES:

1. The Wedge Anchor System and the Universal Anchor System with thin wall tubing post may be used to support up to 10 square feet of sign area.
2. The tubular socket, wedge and prefabricated T-bracket shall be permanently marked to indicate manufacturer. Method, design, and location of marking are subject to the approval of the TxDOT Traffic Standards Engineer.
3. Except for posts (13 BWG Tubing), clamps, nuts and bolts, all components shall be prequalified. A list of prequalified vendors may be obtained from the TxDOT Traffic Standards Engineer, or the Traffic Operations Division website. The website address is: http://www.dot.state.tx.us/insdtdot/orgchart/trf/trfeng
4. Material used as post with this system shall conform to the following specifications:
   13 BWG Tubing (2.375" outside diameter)
   0.095" nominal wall thickness
   Seamless or electric-resistance welded steel tubing
   Steel shall be HSLAS Gr 55 per ASTM A1011 or ASTM A1008
   Other steels may be used if they meet the following:
   55,000 PSI minimum yield strength
   70,000 PSI minimum tensile strength
   18% minimum elongation in 2"
   Wall thickness (uncoated) shall be within the range of .083" to .099"
   Outside diameter (uncoated) shall be within the range of 2.369" to 2.381"
   Galvanization per ASTM 123 or ASTM A653 G210. For precoated steel tubing (ASTM A653), recoat tube outside diameter weld seam by metallizing with zinc wire per ASTM B833.
5. Sign blanks shall be the sizes and shapes shown on the plans. Unless otherwise shown, no panel on multipanel plywood signs shall have a dimension less than 18 inches. Plywood signs 4 feet by 8 feet or smaller in either dimension shall be of one piece construction.
6. Additional sign clamp required on the "T-bracket" post for 24" high signs. Place clamp at least 3" above bottom of sign when possible.
7. Sign supports shall not be spliced except where shown. Sign support posts shall not be spliced.
8. See the Traffic Operations Division website for detailed drawings of sign clamps and Wedge Anchor System components. The website address is: ftp://ftp.dot.state.tx.us/pub/txdot-info/cmd/cserve/standard/traffic/slip.pdf

WEDGE ANCHOR SYSTEM INSTALLATION PROCEDURE

1. Dig foundation hole. Where solid rock is encountered at ground level, the foundation shall be a minimum depth of 18". When solid rock is encountered below ground level, the foundation shall extend in the solid rock a minimum depth of 18" or provide a minimum foundation depth of 30". If solid rock is encountered, the socket/stub may be reduced in length as required to a minimum length of 18". Any material removed from the socket/stub shall be from the bottom and the clearance requirements given on SMD(GEN) must be followed. The inner surfaces of the socket/stub must remain free of concrete or other debris.
2. Thoroughly wet and mix concrete in a container. Place concrete into hole until it is approximately flush with the ground.
3. Insert tubular socket into concrete until top of socket is approximately 1/4 " above the concrete footing.
4. Plumb the socket and allow concrete adequate time to set.
5. Attach the sign to the sign post.
6. Insert the sign post into socket and align sign face with roadway.
7. Drive the wedge into the socket to secure post. This will leave approximately 3 inches of the wedge exposed.

UNIVERSAL ANCHOR SYSTEM INSTALLATION PROCEDURE

1. Dig foundation hole. Where solid rock is encountered at ground level, the foundation shall be a minimum depth of 18". When solid rock is encountered below ground level, the foundation shall extend in the solid rock a minimum depth of 18" or provide a minimum foundation depth of 30". If solid rock is encountered, the socket/stub may be reduced in length as required to a minimum length of 18". Any material removed from the socket/stub shall be from the bottom and the clearance requirements given on SMD(GEN) must be followed. The inner surfaces of the socket/stub must remain free of concrete or other debris.
2. Insert base post in hole to depths shown and backfill hole with concrete.
3. Level and plumb the base post using a torpedo level and allow concrete adequate time to set. The bottom of the slots provided in the stub pipe shall remain above the top of the concrete foundation.
4. Attach the sign to the sign post.
5. Install plastic insert around bottom of post.
6. Insert sign post into base post. Lower until the post comes to rest on steel rod.
7. Seat compression ring using a hammer. Typically, the top of compression ring will be approximately level with top of stub post when optimally installed.
8. Check sign post by hand to ensure it is unable to turn. If loose, increase the tightening of the compression ring.

Sign Installation Using a Prefabricated T-Bracket for Thin-Wall Tubing Post

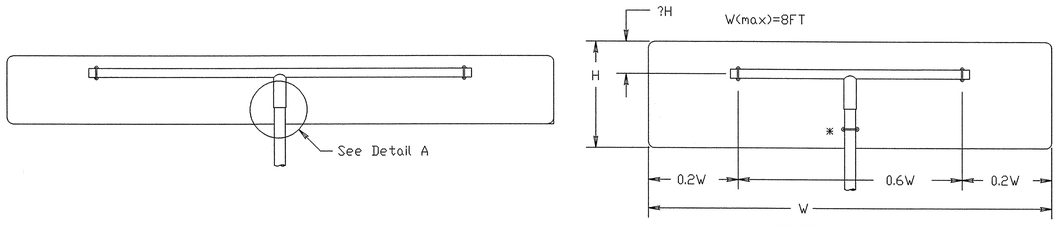

SM RD SGN ASSM TY TWT(X)XX(T)

(* - See General Note 6)

Drill 7/16" hole (through) after assembly and install bolt, nut, 2 flat washers and lock washer.

3/8" x 4" heavy hex bolt with nut, lock washer and 2 flat washers per ASTM A307 galvanized per Item 445, "Galvanizing."

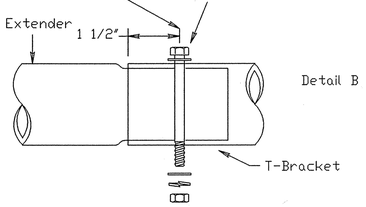

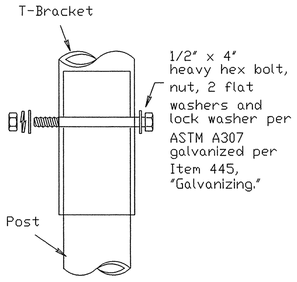

Detail A

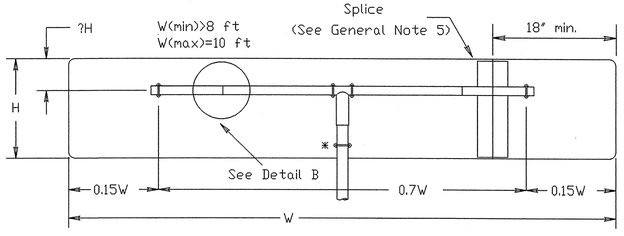

SM RD SGN ASSM TY TWT(X)XX(T-2EXT)

(* - See General Note 6)

For horizontal rectangular signs, T-brackets may be used for signs up to 24" in height. Square footage of signs may not exceed 10 sf on this system.

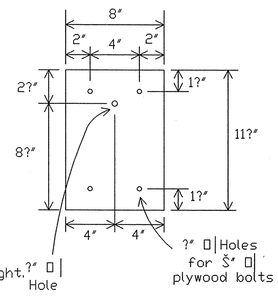

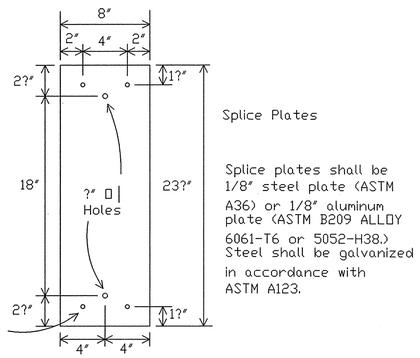

Splice Plates

Splice plates shall be 1/8" steel plate (ASTM A36) or 1/8" aluminum plate (ASTM B209 ALLOY 6061-T6 or 5052-H38.) Steel shall be galvanized in accordance with ASTM A123.

STANDARD PLANS
Texas Department of Transportation
Traffic Operations Division

SIGN MOUNTING DETAILS SMALL ROADSIDE SIGNS WEDGE & UNIVERSAL ANCHOR WITH THIN WALL TUBING POST

SMD(TWT)-02

© TxDOT July 2002	DN-BAS	CK-GRB	DW-FDN	CK-CAL

REVISIONS	STATE DISTRICT	FEDERAL REGION	FEDERAL AID PROJECT	SHEET
		6		
	COUNTY		CONTROL SECTION JOB	HIGHWAY

C10.05 26E

PI NO: 1294-06-065

DWG NO: 1294-06-065-07A.DWG

P-200708-01

LEVELS DISPLAYED

1	2	3	4	5	6	7	8	9	10	11	12	13	14	15	16
17	18	19	20	21	22	23	24	25	26	27	28	29	30	31	32
33	34	35	36	37	38	39	40	41	42	43	44	45	46	47	48
49	50	51	52	53	54	55	56	57	58	59	60	61	62	63	

ACC:

TWILLIAMS 02/22/2008 - 9:57AM
N:\JOBS\1200-1299\1294-06-065\DWG\1294-06-065-07A.DWG

DISCLAIMER
The use of this standard is governed by the "Texas Engineering Practice Act". No warranty of any kind is made by TxDOT for any purpose whatsoever. TxDOT assumes no responsibility for the conversion of this standard to other formats or for incorrect results or damages resulting from its use.

Universal Anchor System with Fiberglass Reinforced Plastic (FRP) Post

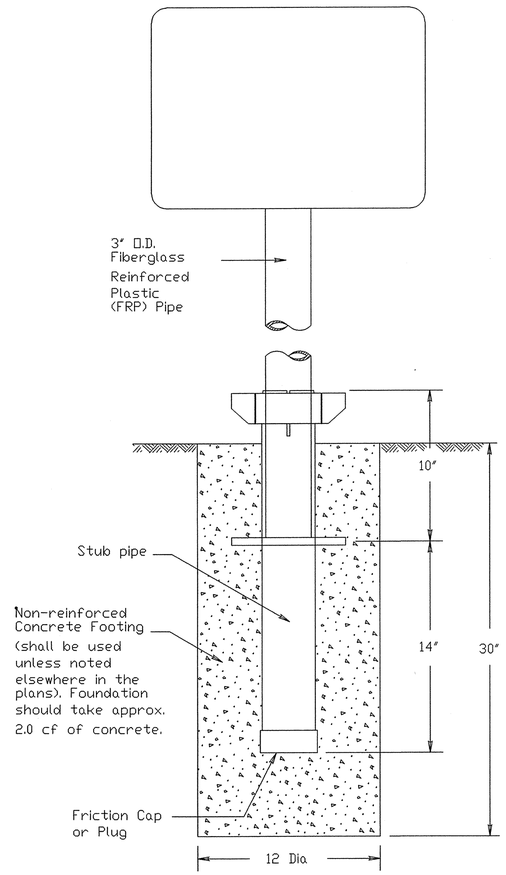

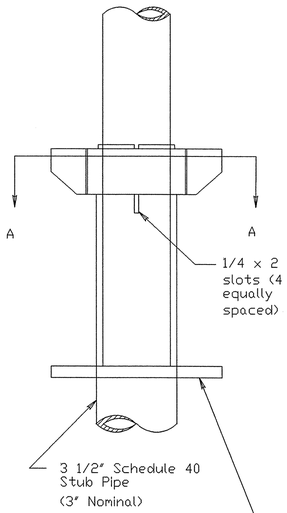

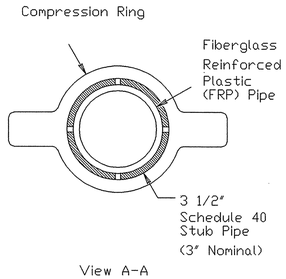

SM RD SGN ASSM TY FRP(X)UA(P)

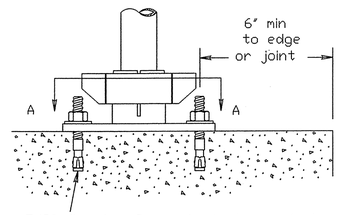

Concrete anchor consists of 5/8" diameter stud bolt with UNC series bolt threads on the upper end. A heavy hex nut per ASTM A563 and hardened washer per ASTM F436. The stud bolt shall have minimum yield and ultimate tensile strengths of 50 and 75 ksi, respectively. Nuts, bolts and washers shall be galvanized per Item 445, "Galvanizing." Top of bolt shall extend at least flush with top of nut when installed. The anchor, when installed in 4000 psi normal-weight concrete with a 3 3/8" minimum embedment, shall have a minimum allowable tension and shear of 2450 and 1525 psi, respectively. Adhesive type anchors shall have stud bolts installed with Type III epoxy per DMS-6100, "Epoxies and Adhesives." Adhesive anchors may be loaded after adequate epoxy cure time per the manufacturer's recommendations.

BOLT-DOWN DETAILS

SM RD SGN ASSM TY FRP(X)UB(P)

GENERAL NOTES:

1. FRP sign supports for a single type sign support may be used for signs up to and including 16 square feet. Dual post installation may be used for signs up to and including 32 square feet.
2. All nuts, bolts and washers shall be galvanized per Item 445, "Galvanizing."
3. See the Traffic Operations Division website for detailed drawings of sign clamps. The website address is: http://www.dot.state.tx.us/insdtdot/orgchart/trf/trfeng/

FRP POST REQUIREMENTS

1. Materials shall conform to the requirements of Department Material Specification DMS-4410 and will be furnished in a yellow or gray color as specified elsewhere in the plans.
2. Thickness of FRP sign support is 0.125" + 0.031", - 0.0".
3. FRP sign supports are prequalified by the Traffic Operations Division. Prequalification procedures are obtained by writing:
   Texas Department of Transportation
   Traffic Operations Division
   125 East 11th Street
   Austin, Texas 78701-2483

UNIVERSAL ANCHOR SYSTEM INSTALLATION PROCEDURES

1. Dig foundation hole. Where solid rock is encountered at ground level, the foundation shall be a minimum depth of 18". When solid rock is encountered below ground level, the foundation shall extend in the solid rock a minimum depth of 18" or provide a minimum foundation depth of 30". If solid rock is encountered, the socket/stub may be reduced in length as required to a minimum length of 18". Any material removed from the socket/stub shall be from the bottom and the clearance requirements given on SMD(GEN) must be followed. The inner surfaces of the socket/stub must remain free of concrete or other debris.
2. Insert base post in foundation hole to depths shown and fill hole with concrete. Cut base post from bottom and ensure a minimum of 18" embedment if installed in solid rock.
3. Level and plumb the base post with coupler using a torpedo level and let concrete harden. Bottom of base post slots shall be above the concrete footing.
4. Attach sign to FRP post.
5. Insert sign post into base post. Lower until the post comes to rest on the steel rod.
6. Use hammer to ensure the coupler is firmly seated. Top of coupler should be level with top of base post in most instances.
7. Check sign to ensure there is no twist. If loose, increase the tightening of coupler.

BOLT DOWN SIGN SUPPORT

1. Position base plate with coupler on existing concrete.
2. Drill holes into concrete and insert the 5/8" diameter bolts with wedge anchors, and tighten nuts.
3. Attach sign to FRP post.
4. Insert bottom of sign post into pipe stub.
5. Use hammer to ensure the coupler is firmly seated. Top of coupler should be level with top of base post in most instances.
6. Check sign to ensure there is no twist. If loose, increase the tightening of coupler.

Typical Sign Mounting Detail for FRP Support with Single Sign

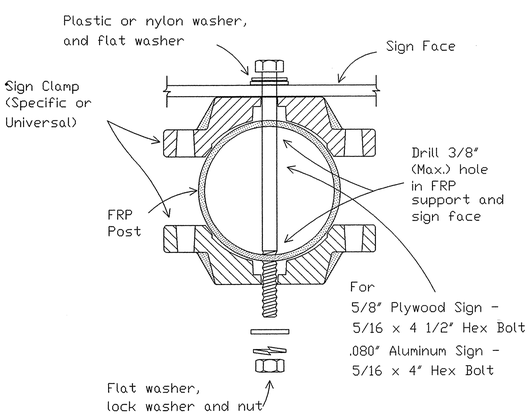

Typical Sign Mounting Detail for FRP Support with Back-to-Back Signs

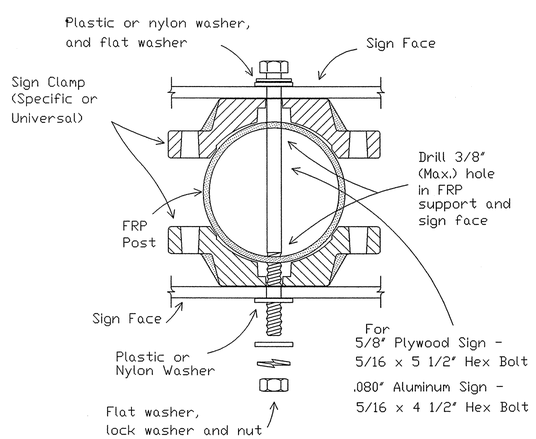

LEVELS DISPLAYED

																ACC:
1	2	3	4	5	6	7	8	9	10	11	12	13	14	15	16	
17	18	19	20	21	22	23	24	25	26	27	28	29	30	31	32	
33	34	35	36	37	38	39	40	41	42	43	44	45	46	47	48	
49	50	51	52	53	54	55	56	57	58	59	50	61	62	63		

STANDARD PLANS
Texas Department of Transportation
Traffic Operations Division

SIGN MOUNTING DETAILS SMALL ROADSIDE SIGNS UNIVERSAL ANCHOR SYSTEM WITH FRP POST

SMD(FRP)-02

© TxDOT July 2002	DN-BAS	CK-GRB	DW-FDN	CK-CAL
REVISIONS	STATE DISTRICT	FEDERAL REGION	FEDERAL AID PROJECT	SHEET
		6		
COUNTY		CONTROL	SECTION	JOB	HIGHWAY

C10.06 26F

PI NO: 1294-06-065

DWG NO: 1294-06-065-07A.DWG

P-200708-01

TWILLIAMS 02/22/2008 - 9:57AM
N:\JOBS\1200-1299\1294-06-065\DWG\1294-06-065-07A.DWG

DISCLAIMER:
The use of this standard is governed by the Texas Engineering Practice Act. No warranty of any kind is made by TxDOT for any purpose whatsoever. TxDOT assumes no responsibility for the conversion of this standard to other formats or for incorrect results or damages resulting from its use.

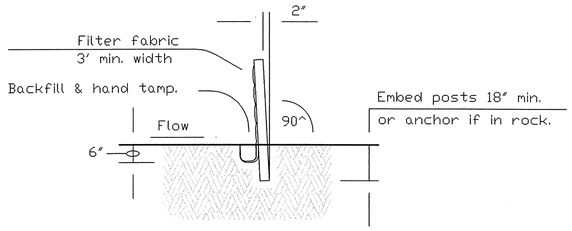

SECTION A-A

SEDIMENT CONTROL FENCE USAGE GUIDELINES

A sediment control fence may be constructed near the downstream perimeter of a disturbed area along a contour to intercept sediment from overland runoff. A 2 year storm frequency may be used to calculate the flow rate to be filtered.

Sediment control fence should be sized to filter a max. flow through rate of 100 GPM/FT 2 Sediment control fence is not recommended to control erosion from a drainage area larger than 2 acres.

PLAN SHEET LEGEND

Sediment Control Fence —— SCF ——

GENERAL NOTES

1. The guidelines shown hereon are suggestions only and may be modified by the Engineer.

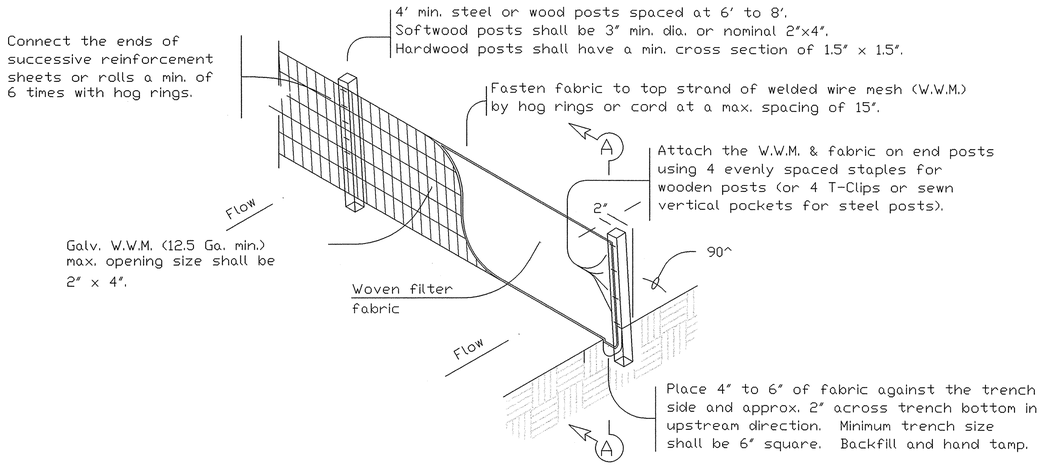

TEMPORARY SEDIMENT CONTROL FENCE

SCF

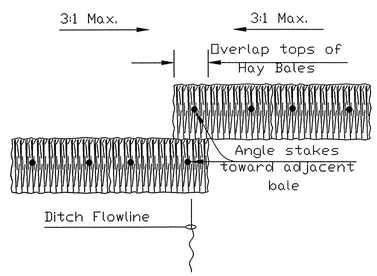

PLAN VIEW

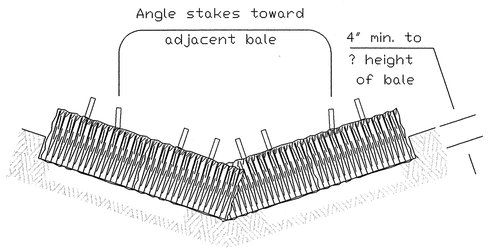

PROFILE VIEW

PLANS SHEET LEGEND

Baled Hay —— BH ——

BALED HAY USAGE GUIDELINES

A Baled Hay installation may be constructed near the downstream perimeter of a disturbed area along a contour to intercept sediment from overland runoff. A two year storm frequency may be used to calculate the flow rate to be filtered. The installation should be sized to filter a maximum flow thru rate of 5 GPM/FT2 of cross sectional area. Baled hay may be used at the following locations:

1. Where the runoff approaching the baled hay flows over disturbed soil for less than 100'. If the slope of the disturbed soil exceeds 10%, the length of slope upstream the baled hay should be less than 50'.
2. Where the installation will be required for less than 3 months.
3. Where the contributing drainage area is less than ? acre.

For Baled Hay installations in small ditches, the additional following considerations apply:

1. The ditch sideslopes should be graded as flat as possible to maximize the drainage flowrate thru the hay.
2. The ditch should be graded large enough to contain the overtopping drainage when sediment has filled to the top of the baled hay.

Bales should be replaced usually every 2 months or more often during wet weather when loss of structural integrity is accelerated.

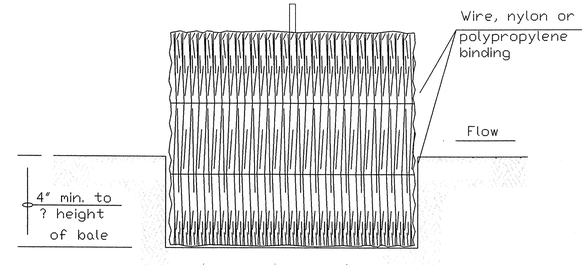

SECTION B-B

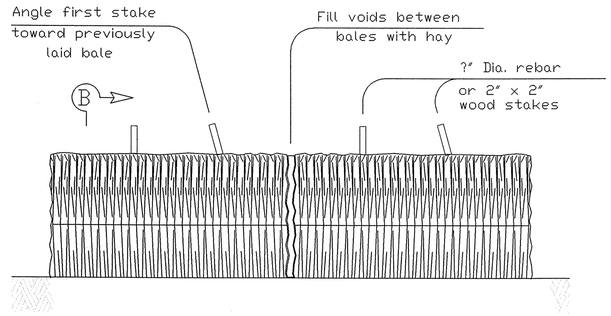

BALED HAY FOR EROSION CONTROL

BH

GENERAL NOTES

1. Hay bales shall be a minimum of 30" in length and weigh a minimum of 50 Lbs.
2. Hay bales shall be bound by either wire or nylon or polypropylene string. The bales shall be composed entirely of vegetative matter.
3. Hay bales shall be embedded in the soil a minimum of 4" and where possible ? the height of the bale.
4. Hay bales shall be placed in a row with ends tightly abutting the adjacent bales. The bales shall be placed with bindings parallel to the ground.
5. Hay bales shall be securely anchored in place with ?" Dia. rebar or 2" x 2" wood stakes, driven through the bales. The first stake shall be angled towards the previously laid bale to force the bales together.
6. The guidelines shown hereon are suggestions only and may be modified by the Engineer.

REVISION HISTORY

Texas Department of Transportation
Design Division (Roadway)

TEMPORARY EROSION, SEDIMENT AND WATER POLLUTION CONTROL MEASURES

FENCED & BALED HAY

EC(1)-93

FILE: EC193.DGN	DN: HEJ	CK: HEJ	DW: BGD	CK:
© TxDOT JUNE 1993	DISTRICT	FEDERAL AID PROJECT		SHEET
REVISIONS				
	COUNTY	CONTROL	SECT	JOB	HIGHWAY

PI NO: 1294-06-065

C11.01

DWG NO: 1294-06-065-07A.DWG
P-200708-01

TWILLIAMS 02/22/2008 - 9:57AM
N:\DBS\1200-1299\1294-06-065\DWG\1294-06-065-07A.DWG

LEVELS DISPLAYED																
1	2	3	4	5	6	7	8	9	10	11	12	13	14	15	16	
17	18	19	20	21	22	23	24	25	26	27	28	29	30	31	32	
33	34	35	36	37	38	39	40	41	42	43	44	45	46	47	48	
#50	51	52	53	54	55	56	57	58	59	60	61	62	63			

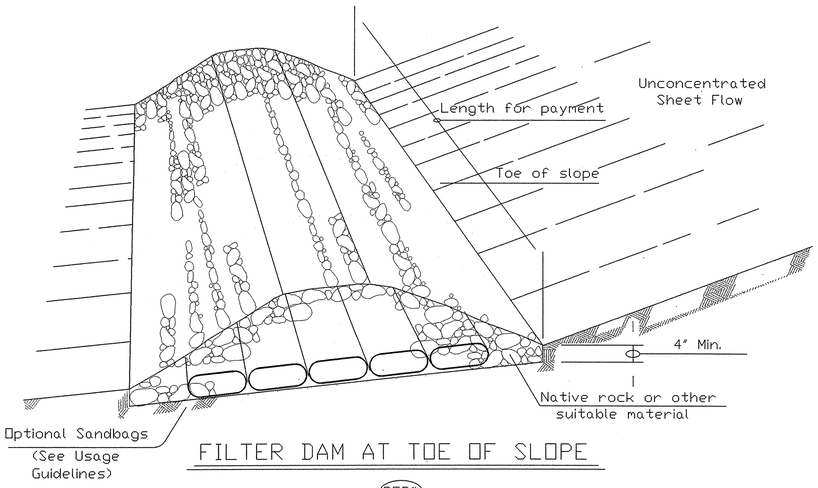

FILTER DAM AT TOE OF SLOPE

RFD1

TYPE 1

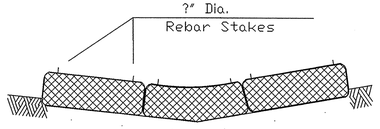

SECTION B-B

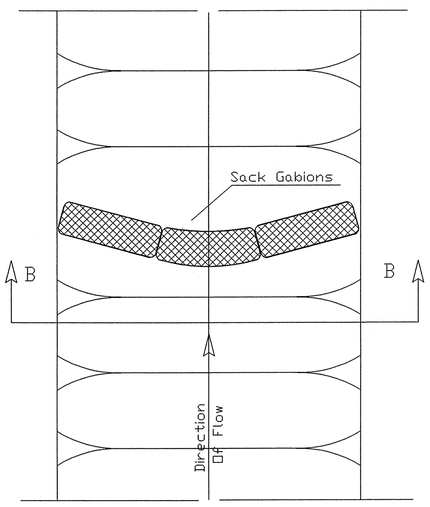

PLAN VIEW

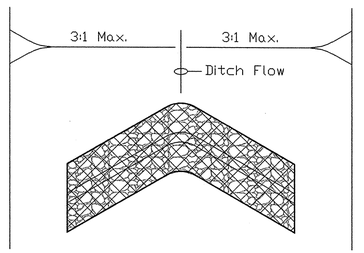

"V" SHAPE

(Plan View)

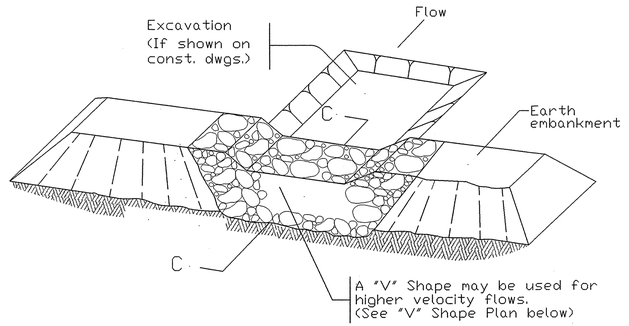

FILTER DAM AT SEDIMENT TRAP

RFD1 OR RFD2

TYPE 1 OR TYPE 2

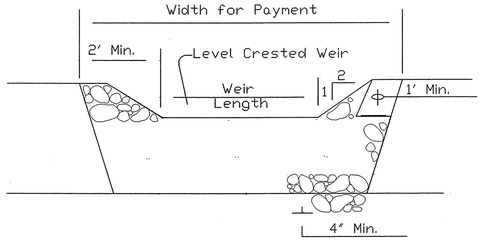

PROFILE

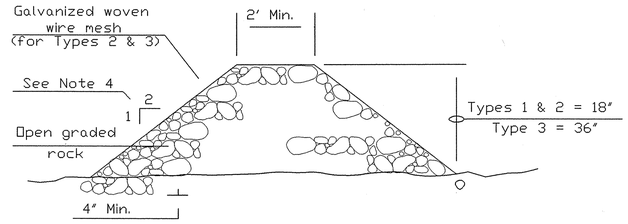

SECTION C-C

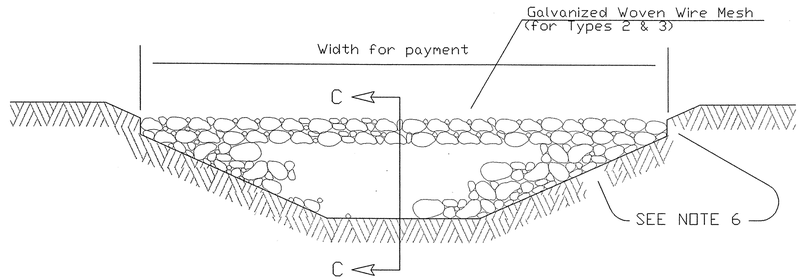

FILTER DAM AT CHANNEL SECTIONS

RFD1 OR RFD2 OR RFD3

TYPE 1 OR TYPE 2

PLANS SHEET LEGEND

Type 1 Rock Filter Dam — RFD1

Type 2 Rock Filter Dam — RFD2

Type 3 Rock Filter Dam — RFD3

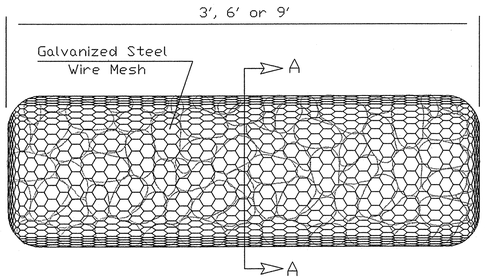

TYPE 4 (SACK GABIONS)

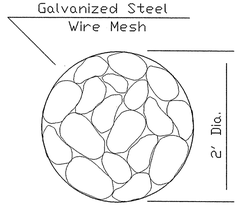

SECTION A-A

ROCK FILTER DAM USAGE GUIDELINES

Rock Filter Dams should be constructed downstream from disturbed areas to intercept sediment from overland runoff and/or concentrated flow. The dams should be sized to filter a maximum flow through rate of 60 GPM/FT^2 of cross sectional area. A 2 year storm frequency may be used to calculate the flow rate.

Type 1 (18" high with no wire mesh): Type 1 may be used at the toe of slopes, around inlets, in small ditches, and at dike or swale outlets. This type of dam is recommended to control erosion from a drainage area of 5 acres or less. Type 1 may not be used in concentrated high velocity flows (approx. 8 Ft/Sec or more) in which aggregate wash out may occur. Sandbags may be used at the embedded foundation (4" deep min.) for better filtering efficiency of low flows if called for on the plans or directed by the Engineer.

Type 2 (18" high with wire mesh): Type 2 may be used in ditches and at dike or swale outlets.

Type 3 (36" high with wire mesh): Type 3 may be used in stream flow and should be secured to the stream bed.

Type 4 (Sack gabions): Type 4 May be used in ditches and smaller channels to form an erosion control dam.

GENERAL NOTES

1. If shown on the plans or directed by the Engineer, filter dams should be placed near the toe of slopes where erosion is anticipated, upstream and/or downstream at drainage structures, and in roadway ditches and channels to collect sediment.
2. Materials (aggregate, wire mesh, sandbags, etc.) shall be as indicated by the specification for "Rock Filter Dams for Erosion and Sedimentation Control".
3. The rock filter dam dimensions shall be as indicated on the SW3P plans.
4. Side slopes should be 2:1 or flatter. Dams within the safety zone shall have sideslopes of 6:1 or flatter.
5. Maintain a minimum of 1' between top of rock filter dam weir and top of embankment for filter dams at sediment traps.
6. Filter dams should be embedded a minimum of 4" into existing ground.
7. The sediment trap for ponding of sediment laden runoff shall be of the dimensions shown on the plans.
8. Rock filter dam types 2 & 3 shall be secured with 20 gauge galvanized woven wire mesh with 1" diameter hexagonal openings. The aggregate shall be placed on the mesh to the height & slopes specified. The mesh shall be folded at the upstream side over the aggregate and tightly secured to itself on the downstream side using wire ties or hog rings. In stream use the mesh should be secured or staked to the stream bed prior to aggregate placement.
9. Sack Gabions should be staked down with ?" dia. rebar stakes.
10. Flow outlet should be onto a stabilized area (vegetation, rock, etc.).
11. The guidelines shown hereon are suggestions only and may be modified by the Engineer.

REVISION HISTORY

Texas Department of Transportation
Design Division (Roadway)

TEMPORARY EROSION, SEDIMENT AND WATER POLLUTION CONTROL MEASURES

ROCK FILTER DAMS

EC(2)-93

FILE: EC293.DGN	DN: HEJ	CK: HEJ	DW: BGD	CK:
© TxDOT JUNE 1993	DISTRICT	FEDERAL AID PROJECT		SHEET
REVISIONS				
	COUNTY	CONTROL	SECT	JOB	HIGHWAY

PI NO: 1294-06-065

C11.02
DWG NO: 1294-06-065-07A.DWG
P-200708-01

LEVELS DISPLAYED
1 2 3 4 5 6 7 8 9 10 11 12 13 14 15 16
7 8 9 10 20 22 23 24 25 26 27 28 29 30 31 32
33 34 35 36 37 38 39 40 41 42 43 44 45 46 47 48
49 50 51 52 53 54 55 56 57 58 59 60 61 62 63

DISCLAIMER:
The use of this standard is governed by the Texas Engineering Practice Act. No warranty of any kind is made by TxDOT for any purpose whatsoever. TxDOT assumes no responsibility for the conversion of this standard to other formats or for incorrect results or damages resulting from its use.

TWILIGHT 07/21/2008 - 9:57AM
N:\WORK\2002\1294-06-065\DWG\1294-06-065-07A.DWG

DISCLAIMER:
The use of this standard is governed by the Texas Engineering Practice Act. No warranty is made by TxDOT for any purpose whatsoever. TxDOT assumes no responsibility for the conversion of this standard to other formats or for incorrect results or damages resulting from its use.

TWILLIAMS 02/22/2008 - 9:56AM
N:\WSB\1200-1299\1294-06-065\DWG\1294-06-065-07A.DWG

LEVELS DISPLAYED																
1	2	3	4	5	6	7	8	9	10	11	12	13	14	15	16	
17	18	19	20	21	22	23	24	25	26	27	28	29	30	31	32	
33	34	35	36	37	38	39	40	41	42	43	44	45	46	47	48	
49	50	51	52	53	54	55	56	57	58	59	60	61	62	63		

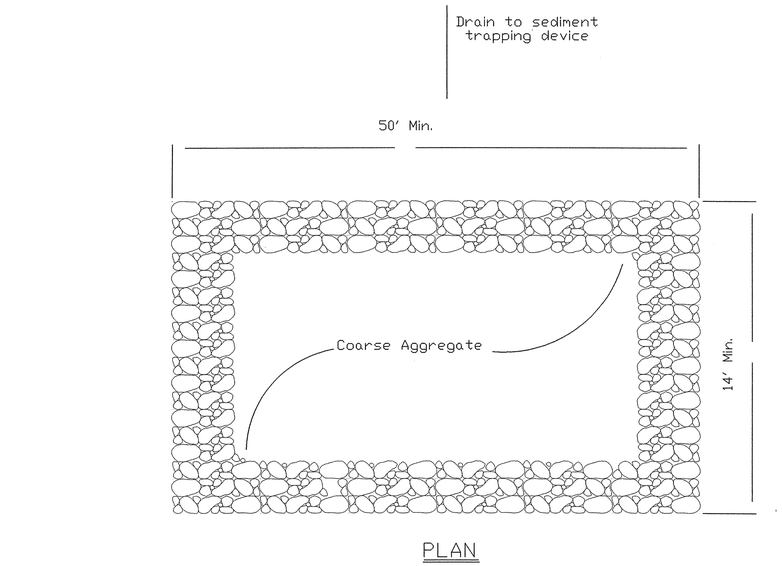

PLAN

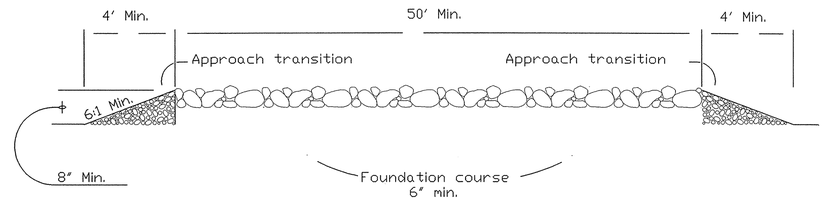

PROFILE

CONSTRUCTION EXIT (TYPE 1)

GENERAL NOTES

1. The length of the type 1 construction exit shall be as indicated on the plans, but not less than 50'.
2. The coarse aggregate should be open graded with a size of 4" to 8".
3. The approach transitions should be no steeper than 6:1 and constructed as directed by the Engineer.
4. The construction exit foundation course shall be flexible base, bituminous concrete, portland cement concrete or other material as approved by the Engineer.
5. The construction exit shall be graded to allow drainage to a sediment trapping device.
6. The guidelines shown hereon are suggestions only and may be modified by the Engineer.

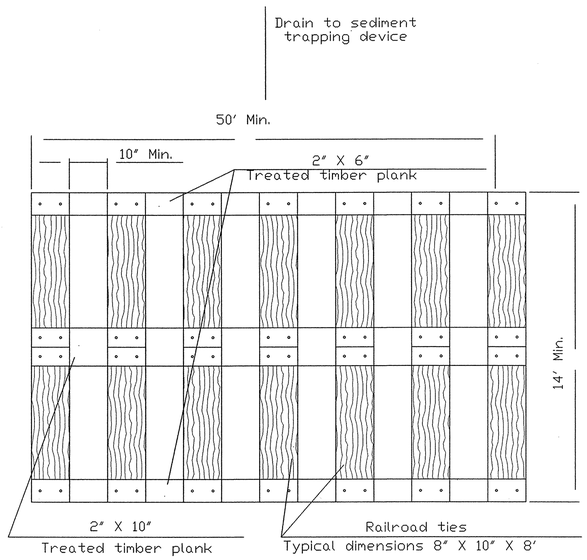

PLAN

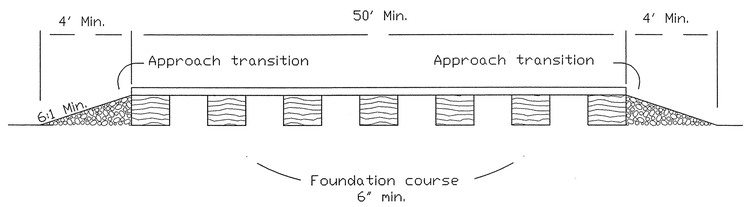

PROFILE

CONSTRUCTION EXIT (TYPE 2)

GENERAL NOTES

1. The length of the type 2 construction exit shall be as indicated on the plans, but not less than 50'.
2. The treated timber planks shall be attached to the railroad ties with ?"x 6" min. lag bolts. Other fasteners may be used as approved by the Engineer.
3. The treated timber planks shall be #2 grade min., and should be free from large and loose knots.
4. The approach transitions shall be no steeper than 6:1 and constructed as directed by the Engineer.
5. The construction exit foundation course shall be flexible base, bituminous concrete, portland cement concrete or other material as approved by the Engineer.
6. The construction exit should be graded to allow drainage to a sediment trapping device.
7. The guidelines shown hereon are suggestions only and may be modified by the Engineer.

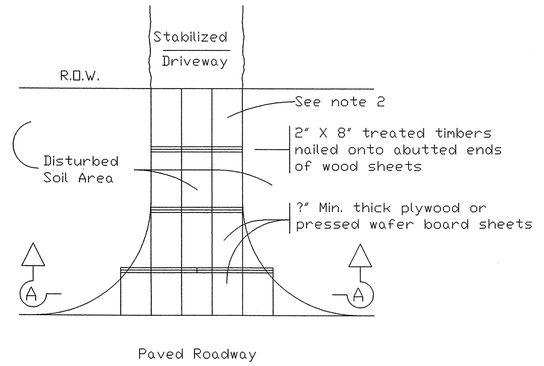

PLAN

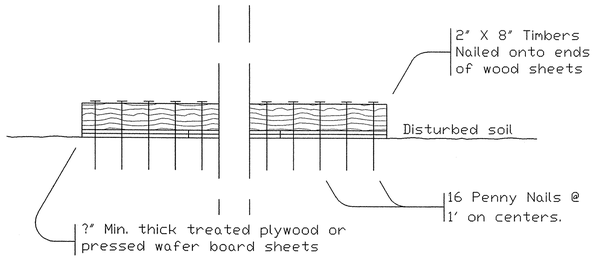

SECTION A-A

CONSTRUCTION EXIT (TYPE 3)

GENERAL NOTES

1. The length of the type 3 construction exit shall be as shown on the plans, or as directed by the Engineer.
2. The type 3 construction exit may be constructed from open graded crushed stone with a size of two to four inches spread a min. of 4" thick to the limits shown on the plans.
3. The treated timber planks shall be #2 grade min., and should be free from large and loose knots.
4. The guidelines shown hereon are suggestions only and may be modified by the Engineer.

REVISION HISTORY

Texas Department of Transportation
Design Division (Roadway)

TEMPORARY EROSION, SEDIMENT AND WATER POLLUTION CONTROL MEASURES

CONSTRUCTION EXITS

EC(3)-93

FILE: EC393.DGN	DN: HEJ	CK: HEJ	DW: BGD	CK:
© TxDOT JUNE 1993	DISTRICT	FEDERAL AID PROJECT		SHEET
REVISIONS				
	COUNTY	CONTROL	SECT	JOB	HIGHWAY

PI NO: 1294-06-065

C11.03
DWG NO: 1294-06-065-07A.DWG
P-200708-01